Draft

Renewable Placer: Waste Action Plan Environmental Impact Report

Western Placer Management Authority
Project No. P2683386
October 29, 2021

CELEBRATING 40 YEARS OF SERVICE
WPWMA
Est. 1978

Jacobs

Contents

Acronyms and Abbreviations xv
1. Introduction 1-1
1.1 WPWMA 1-1
1.2 Project Location 1-1
1.3 Purpose and Intended Uses of this Draft Environmental Impact Report 1-6
1.4 Project Objectives 1-6
1.5 Existing Baseline Conditions 1-7
1.6 Existing Waste Recovery and Waste Disposal Operations 1-8
1.6.1 Sitewide Operations 1-8
1.6.2 Waste Recovery Operations 1-9
1.6.3 Waste Disposal Operation 1-25
1.7 Public Review Process 1-40
1.7.1 Notice of Preparation and Public Scoping Meeting 1-40
1.7.2 Circulation of the Draft EIR 1-42
1.8 Permits and Approvals 1-42
1.8.1 Regulatory Compliance 1-42
1.8.2 Federal, State, and Local Permits and Approvals 1-43
1.8.3 Local Approvals 1-43
1.9 Content and Organization of Draft EIR 1-45
1.10 References 1-46
2. Executive Summary 2-1
2.1 Purpose of this Document 2-1
2.2 Overview of the Proposed Project 2-1
2.2.1 Waste Recovery 2-2
2.2.2 Waste Disposal 2-2
2.2.3 Potential Facility Operating Contract Amendments 2-3
2.2.4 Baseline Condition and Plan Concept Comparison 2-3
2.2.5 Preferred Plan Concept 2-3
2.3 Project Alternatives 2-11
2.3.1 Alternatives Considered but Eliminated 2-11
2.3.2 Evaluation of Project Alternatives 2-11
2.4 Summary of Project Impacts and Mitigation 2-12
2.5 Cumulative Impacts 2-58
2.5.1 Aesthetics 2-58
2.5.2 Air Quality 2-58
2.5.3 Biological Resources 2-59
2.5.4 Cultural and Tribal Resources 2-59
2.5.5 Geology, Soils, and Paleontological Resources 2-59
2.5.6 Greenhouse Gas Emissions 2-59
2.5.7 Hazards, Hazardous Materials, and Wildfire 2-59

2.5.8 Hydrology and Water Quality 2-60
2.5.9 Land Use and Planning 2-60
2.5.10 Noise 2-60
2.5.11 Public Services 2-60
2.5.12 Transportation 2-60
2.5.13 Utilities and Energy 2-60

3. Project Description 3-1
3.1 Introduction 3-1
3.2 Project Location 3-1
3.3 Plan Concept Descriptions 3-1
3.3.1 Potential Facility Operating Contract Amendments 3-3
3.4 Baseline Condition and Plan Concept Comparison 3-3
3.5 Plan Concept 1 3-9
3.5.1 Sitewide Solid Waste Operations 3-11
3.5.2 Waste Recovery Operations 3-15
3.5.3 Waste Disposal Operations 3-24
3.5.4 Complementary and Programmatic Elements 3-41
3.5.5 Supporting Elements 3-47
3.6 Plan Concept 2 3-49
3.6.1 Sitewide Solid Waste Operations 3-50
3.6.2 Waste Recovery Operations 3-53
3.6.3 Waste Disposal Operations 3-63
3.6.4 Complementary/Programmatic Elements 3-80
3.6.5 Supporting Elements 3-83
3.7 References 3-86

4. Approach 4-1
4.1 Evaluation of Two Plan Concepts to Implement the Renewable Placer: Waste Action Plan 4-1
4.2 Preferred Plan Concept 4-3
4.3 Relationship of Project to Sunset Area Plan/Sunset Area Plan Environmental Impact Report 4-6
4.3.1 Transportation Approach 4-7
4.3.2 Cumulative Approach 4-7
4.4 Solid Waste Elements versus Complementary and Programmatic Elements Addressed in EIR 4-8
4.5 Additional Baseline Information 4-11
4.5.1 Organics Management 4-13
4.5.2 Site-Wide Odor Plan 4-13
4.5.3 Landfill Gas Generation 4-14
4.6 MRF Operations Design Concept Evaluation 4-14

5. Aesthetics 5-1
5.1 Environmental Setting 5-1
5.1.1 Regional Setting 5-1

5.1.2 Project Area 5-2
5.2 Regulatory Setting 5-2
5.2.1 Federal 5-2
5.2.2 State 5-2
5.2.3 Local 5-3
5.3 Impact Analysis and Mitigation Measures 5-4
5.3.1 Thresholds of Significance 5-4
5.3.2 Analysis Procedure 5-5
5.3.3 Key Observation Points 5-7
5.3.4 Character Photographs 5-18
5.3.5 Project Appearance 5-26
5.3.6 Visual Effects Assessment 5-34
5.3.7 Impacts and Mitigation Measures 5-59
5.4 References 5-61
6. Air Quality 6-1
6.1 Methodology 6-1
6.2 Environmental Setting 6-7
6.2.1 Climate, Meteorology, and Topography 6-8
6.2.2 Criteria Air Pollutants 6-10
6.2.3 Toxic Air Contaminants 6-16
6.2.4 Odorous Compounds 6-17
6.3 Regulatory Setting 6-23
6.3.1 Federal 6-23
6.3.2 State 6-24
6.3.3 Local 6-26
6.4 Impact Analysis and Mitigation Measures 6-33
6.4.1 Thresholds of Significance 6-33
6.4.2 Methods and Approach 6-35
6.4.3 Impacts and Mitigation Measures 6-36
6.5 References 6-66
7. Biological Resources 7-1
7.1 Environmental Setting 7-1
7.1.1 Methodology 7-1
7.1.2 Climate 7-7
7.1.3 Soils and Topography 7-7
7.1.4 Hydrology 7-7
7.1.5 Land Cover Types 7-7
7.1.6 Special-Status Plant and Wildlife Species 7-15
7.2 Regulatory Setting 7-26
7.2.1 Federal 7-26
7.2.2 State 7-28
7.2.3 Local 7-30

7.3 Impact Analysis and Mitigation Measures 7-35
7.3.1 Thresholds of Significance 7-35
7.3.2 Methodology 7-35
7.3.3 Impacts and Mitigation Measures 7-36
7.4 References 7-48
8. Cultural and Tribal Cultural Resources 8-1
8.1 Environmental Setting 8-1
8.1.1 Area of Potential Effects 8-1
8.1.2 Methodology 8-1
8.1.3 Cultural Resources Setting 8-4
8.2 Regulatory Setting 8-8
8.2.1 Federal 8-8
8.2.2 State 8-9
8.2.3 Local 8-12
8.3 Impact Analysis and Mitigation Measures 8-16
8.3.1 Thresholds of Significance 8-16
8.3.2 Findings 8-17
8.3.3 Impacts 8-18
8.4 References 8-22
9. Geology, Soils, and Paleontological Resources 9-1
9.1 Environmental Setting 9-1
9.1.1 Methodology 9-1
9.1.2 Geologic Setting 9-2
9.1.3 Faults, Seismicity, and Related Hazards 9-7
9.1.4 Soils 9-8
9.1.5 Soil Stability 9-16
9.1.6 Paleontological Resources Setting 9-17
9.2 Regulatory Setting 9-19
9.2.1 Geology and Soils 9-19
9.2.2 Paleontological Resources 9-24
9.3 Impact Analysis and Mitigation Measures 9-25
9.3.1 Thresholds of Significance 9-25
9.3.2 Impacts and Mitigation Measures 9-26
9.4 References 9-34
10. Greenhouse Gas Emissions and Climate Change 10-1
10.1 Methodology 10-1
10.2 Environmental Setting 10-4
10.2.1 Physical Science Basis 10-4
10.2.2 Greenhouse Gas Emission Sources 10-5
10.2.3 Effects of Climate Change on the Environment 10-6
10.3 Regulatory Setting 10-6
10.3.1 International and Federal 10-6

10.3.2 State 10-8
10.3.3 Local 10-13
10.4 Impact Analysis and Mitigation Measures 10-14
10.4.1 Thresholds of Significance 10-14
10.4.2 Impacts and Mitigation Measures 10-16
10.5 References 10-25
11. Hazards, Hazardous Materials and Wildfire 11-1
11.1 Environmental Setting 11-1
11.1.1 Hazards and Hazardous Materials 11-1
11.1.2 Wildfire 11-1
11.1.3 Methodology 11-2
11.1.4 Local Setting 11-2
11.1.5 Regional Setting 11-6
11.2 Regulatory Setting 11-8
11.2.1 Federal 11-11
11.2.2 State 11-12
11.2.3 Local 11-16
11.3 Impact Analysis and Mitigation Measures 11-18
11.3.1 Thresholds of Significance 11-18
11.3.2 Impacts 11-19
11.4 References 11-30
12. Hydrology and Water Quality 12-1
12.1 Environmental Setting 12-1
12.1.1 Methodology 12-1
12.1.2 Regional Setting 12-2
12.1.3 Local Setting 12-3
12.2 Regulatory Setting 12-21
12.2.1 Federal 12-21
12.2.2 State 12-23
12.2.3 Local 12-28
12.3 Impact Analysis and Mitigation Measures 12-34
12.3.1 Thresholds of Significance 12-34
12.3.2 Impacts and Mitigation Measures 12-35
12.4 References 12-43
13. Land Use and Planning 13-1
13.1 Introduction 13-1
13.2 Environmental Setting 13-1
13.2.1 Existing Land Use 13-1
13.2.2 Existing Zoning 13-2
13.3 Regulatory Setting 13-2
13.3.1 Federal 13-2
13.3.2 State 13-2

13.3.3 Local 13-2
13.4 Impact Analysis and Mitigation Measures 13-12
13.4.1 Thresholds of Significance 13-12
13.4.2 Impact Analysis 13-12
13.5 References 13-13
14. Noise 14-1
14.1 Environmental Setting 14-1
14.1.1 Fundamentals of Noise 14-1
14.1.2 Local and Regional Noise Setting 14-7
14.1.3 Local Noise Sources 14-8
14.2 Regulatory Setting 14-11
14.2.1 Federal 14-11
14.2.2 State 14-11
14.2.3 Local 14-11
14.3 Impact Analysis and Mitigation Measures 14-18
14.3.1 Thresholds of Significance 14-18
14.3.2 Impacts 14-19
14.4 References 14-28
15. Public Services 15-1
15.1 Environmental Setting 15-1
15.1.1 Fire Potential and Protection 15-1
15.1.2 Police Protection 15-4
15.1.3 Schools and Parks 15-4
15.1.4 Roadway Maintenance 15-5
15.2 Regulatory Setting 15-5
15.2.1 Federal 15-5
15.2.2 State 15-5
15.2.3 Local 15-6
15.3 Impact Analysis and Mitigation Measures 15-8
15.3.1 Thresholds of Significance 15-8
15.3.2 Impacts 15-9
15.4 References 15-14
16. Transportation 16-1
16.1 Environmental Setting 16-1
16.1.1 Transportation Study Area 16-1
16.1.2 Regional and Local Road Network 16-1
16.1.3 Existing Roadway Daily Traffic 16-2
16.1.4 Existing Regional Vehicle Miles Traveled 16-2
16.1.5 Pedestrian and Bicycle Facilities and Public Transit 16-2
16.1.6 Airports 16-5
16.2 Regulatory Setting 16-5
16.2.1 Federal 16-5

16.2.2 State 16-5
16.2.3 Local 16-5
16.3 Impact Analysis and Mitigation Measures 16-6
16.3.1 Thresholds of Significance 16-6
16.3.2 Analysis Methodology 16-7
16.3.3 Impact Analysis and Mitigation Measures 16-8
16.4 References 16-17
17. Utilities and Service Systems and Energy 17-1
17.1 Environmental Setting 17-1
17.1.1 Water Supply 17-1
17.1.2 Wastewater 17-2
17.1.3 Reclaimed Water 17-3
17.1.4 Solid Waste 17-3
17.1.5 Electricity and Natural Gas 17-3
17.1.6 Telecommunications 17-4
17.1.7 Sitewide Energy Use 17-4
17.2 Regulatory Setting 17-6
17.2.1 Federal 17-6
17.2.2 State 17-7
17.2.3 Local 17-7
17.3 Impact Analysis and Mitigation Measures 17-11
17.3.1 Thresholds of Significance 17-11
17.3.2 Methodology 17-12
17.3.3 Impact Analysis 17-14
17.4 References 17-24
18. Project Alternatives 18-1
18.1 Introduction 18-1
18.2 Factors Considered in Identifying Project Alternatives 18-2
18.3 Alternatives Considered but Eliminated 18-5
18.3.1 Alternative Location in Placer County 18-5
18.3.2 Landfill Closure and Transfer to Out-of-County Landfill 18-6
18.4 Evaluation of Project Alternatives 18-8
18.4.1 Alternative A: No Project Alternative 18-8
18.4.2 Alternative B: Prioritize Waste Recovery 18-13
18.4.3 Alternative C: No Organics Processing 18-17
18.4.4 Alternative D: Three-Bin Clean MRF Alternative 18-21
18.5 Comparison of Alternatives 18-26
18.6 Environmentally Superior Alternative 18-31
18.7 References 18-32
19. Cumulative Impacts 19-1
19.1 Introduction 19-1
19.2 Cumulative Impact Analysis 19-3

19.2.1 Aesthetics 19-3
19.2.2 Air Quality 19-3
19.2.3 Biological Resources 19-5
19.2.4 Cultural and Tribal Resources 19-6
19.2.5 Geology, Soils, and Paleontological Resources 19-6
19.2.6 Greenhouse Gas Emissions 19-7
19.2.7 Hazards, Hazardous Materials, and Wildfire 19-7
19.2.8 Hydrology and Water Quality 19-7
19.2.9 Land Use and Planning 19-8
19.2.10 Noise 19-8
19.2.11 Public Services 19-8
19.2.12 Transportation 19-9
19.2.13 Utilities and Energy 19-9
19.3 References 19-9

20. Other CEQA Required Sections 20-1
20.1 Introduction 20-1
20.2 Significant Environmental Effects That Cannot Be Avoided 20-1
20.3 Significant Irreversible Environmental Changes 20-1
20.4 Growth-Inducing Effects 20-2
20.5 Impacts Found Not to Be Significant 20-3

21. EIR Preparers and Contributors 21-1
21.1 Western Placer Waste Management Authority 21-1
21.2 Consultants 21-1

Appendixes

A NOP and Responses to Comments
B Visual Resources Rating Forms
C Air Quality
C.1 Methodology for Air Quality and Greenhouse Gas Impact Analysis
C.2 Air Quality Emission Calculations: Criteria Pollutants, Greenhouse Gases, and Toxic Air Contaminants
C.3 LandGEM Modeling Results
C.4 Air Dispersion and Health Risk Assessment Modeling Protocol
C.5 Health Risk Assessment Modeling Report
C.6 Site Wide Odor Plan for the Western Placer Waste Management Authority's Solid Waste Processing and Disposal Facility
D Project-Applicable Conditions on Covered Activities from the PCCP

Tables

1-1 WPWMA Property Assessor Parcel Numbers 1-4
1-2 2018 Baseline Material Recovery Facility Building Tonnages 1-10
1-3 2018 Baseline Organics Management Operation Tonnages 1-15
1-4 2018 Construction and Demolition Material Tonnages 1-18
1-5 2018 Baseline Western Regional Sanitary Landfill Waste Disposal Metrics 1-27
1-6 Existing WPWMA Facility Permits and Approvals 1-44
2-1 Summary of Environmental Baseline and Change Associated with Solid Waste Elements 2-4
2-2 Summary of Environmental Baseline and Change Associated with Complementary and Programmatic Elements 2-8
2-3 Summary of Environmental Baseline and Change Associated with Supporting Elements 2-9
2-4 Summary of Impacts and Mitigation Measures 2-13
3-1 Summary of Environmental Baseline and Change Associated with Solid Waste Elements 3-4
3-2 Summary of Environmental Baseline and Change Associated with Complementary and Programmatic Elements 3-7
3-3 Summary of Environmental Baseline and Change Associated with Supporting Elements 3-8
3-4 Summary of Sitewide Solid Waste Operational Changes Under Plan Concept 1 3-11
3-5 Summary of Expanded MRF Building Operation Under Plan Concept 1 3-15
3-6 Summary of Expanded and Redesigned Organics Management Operation Under Plan Concept 1 3-16
3-7 Summary of Expanded and Redesigned Construction and Demolition Material Processing Operations Under Plan Concept 1 3-21
3-8 Summary of Expanded and Redesigned Public Waste Drop-Off Area Operations Under Plan Concept 1 3-22
3-9 Summary of Environmental Control Measure Implementation Under Plan Concept 1 3-24
3-10 Summary of Tonnage and Vehicle Limit Changes Under Plan Concept 1 3-25
3-11 Summary of the Proposed WRSL Capacity Increase Under Plan Concept 1 3-26
3-12 Summary of Landfill Environmental Monitoring and Control System Changes Under Plan Concept 1 3-28
3-13 Summary of Solid Waste Excavation Changes Under Plan Concept 1 3-39
3-14 Summary of Complementary and Programmatic Elements Under Plan Concept 1 3-42
3-15 Summary of Supporting Elements Under Plan Concept 1 3-47
3-16 Summary of Sitewide Solid Waste Operational Changes Under Plan Concept 2 3-50
3-17 Summary of Expanded MRF Building Operation Under Plan Concept 2 3-53
3-18 Summary of Expanded and Redesigned Organics Management Operation Under Plan Concept 2 3-54
3-19 Summary of Expanded and Redesigned Construction and Demolition Materials Processing Operations Under Plan Concept 2 3-59
3-20 Summary of Expanded and Redesigned Public Waste Drop-Off Area Operations Under Plan Concept 2 3-60
3-21 Summary of Environmental Control Measure Implementation Under Plan Concept 2 3-62
3-22 Summary of Tonnage and Vehicle Limit Changes Under Plan Concept 2 3-63
3-23 Summary of Proposed Landfill Capacity Increase Under Plan Concept 2 3-64
3-24 Summary of Landfill Environmental Monitoring and Control Systems Under Plan Concept 2 3-73
3-25 Summary of Solid Waste Excavation Changes Under Plan Concept 2 3-78
3-26 Summary of Complementary and Programmatic Elements Under Plan Concept 2 3-81
3-27 Summary of Supporting Elements Under Plan Concept 2 3-84
4-1 Plan Concept Final MODA Scores by Reviewer Profile 4-2
4-2 Initial Plan Concept Costs 4-3

4-3 Updated Plan Cost Estimates ... 4-4
4-4 Plan Concept Present Value 2021 Updated Cost Estimate ... 4-5
4-5 Project and Program-Level Evaluation of Complementary and Programmatic Elements in EIR ... 4-11
4-6 Organics Management Operation Baseline and Current Condition ... 4-13
4-7 RFP Responses Relative to Proposed Project ... 4-16
4-8 RFP Responses Addressed in Resource Chapters ... 4-17
5-1 Summary of Landscape Changes Associated with Plan Concept 1 and Plan Concept 2 ... 5-27
6-1 Current Emission Reduction Measures and Best Management Practices Incorporated as Project Design Measures ... 6-3
6-2 National and California Ambient Air Quality Standards ... 6-11
6-3 Summary of Annual Air Quality Data (2017–2019) ... 6-13
6-4 Attainment Status Designations for Placer County ... 6-14
6-5 Odor Notifications by Year Attributed to the WPWMA Facility ... 6-21
6-6 Air Quality and Permitting Agencies ... 6-23
6-7 Summary of Maximum Daily Emissions of Criteria Air Pollutants and Ozone Precursors Associated with Construction by Year for Plan Concept 1 ... 6-41
6-8 Summary of Maximum Daily Emissions of Criteria Air Pollutants and Ozone Precursors Associated with Construction by Year for Plan Concept 2 ... 6-43
6-9 Off-Road Equipment Compliance Step Down Approach ... 6-45
6-10 Summary of Net Daily Operational Emissions Increases for Criteria Air Pollutants and Ozone Precursors for Plan Concept 1 ... 6-49
6-11 Summary of Net Daily Operational Emissions Increases for Criteria Air Pollutants and Ozone Precursors for Plan Concept 2 ... 6-52
6-12 Mobile-Source CO Emissions from Vehicle Trips for Plan Concept 1 ... 6-56
6-13 Mobile-Source CO Emissions from Vehicle Trips for Plan Concept 2 ... 6-57
6-14 Health Risk Assessment Cancer Risk Results for Plan Concept 1 – Project-Level Analysis ... 6-60
6-15 Health Risk Assessment Noncancer Risk Results for Plan Concept 1– Project-Level Analysis ... 6-61
6-16 Health Risk Assessment Cancer Risk Results for Plan Concept 2– Project-Level Analysis ... 6-62
6-17 Health Risk Assessment Noncancer Risk Results for Plan Concept 2 – Project-Level Analysis ... 6-62
7-1 Land Cover Types and Acreage within the Proposed Project Area ... 7-8
7-2 Special-Status Plant Species Known to Occur in the Vicinity of the Proposed Project ... 7-17
7-3 Special-Status Animal Species Known to Occur in the Vicinity of the Proposed Project ... 7-21
8-1 NRHP and CRHR Eligibility of Cultural Resources Identified within the APE ... 8-17
10-1 Current Greenhouse Gas Emission Reduction Measures and Best Management Practices Incorporated as Project Design Measures ... 10-3
10-2 Summary of Maximum Annual Construction Greenhouse Gas Emissions for Plan Concept 1 ... 10-18
10-3 Summary of Maximum Annual Operational Greenhouse Gas Emissions for Plan Concept 1 ... 10-19
10-4 Summary of Maximum Annual Construction Greenhouse Gas Emissions for Plan Concept 2 ... 10-20
10-5 Summary of Maximum Annual Operational Greenhouse Gas Emissions for Plan Concept 2 ... 10-21
14-1 Typical A-Weighted Noise Levels ... 14-2
14-2 FTA Construction Vibration Damage Criteria ... 14-5
14-3 Land Use Categories for Vibration Assessment ... 14-6
14-4 Indoor Ground-Borne Vibration Impact Criteria for General Vibration Assessment ... 14-7
14-5 Allowable L_{dn} Noise Levels within Specified Zone Districts[a] ... 14-13
14-6 Sound Level Standards (Onsite) ... 14-16

14-7 Allowable Noise Levels within Specified Zone Districts....14-17
14-8 Construction Equipment Noise Levels....14-20
14-9 Average Construction Noise Levels versus Distance....14-21
14-10 Typical Construction Equipment Vibration Levels....14-25
14-11 Modeled Existing Roadway Noise Levels Near the WPWMA Facility....14-27
15-1 Potential Fire Types, Descriptions, and Operations....15-1
16-1 Existing Roadways and Roadway Characteristics....16-2
16-2 Placer County Roadway Segment Capacity Thresholds....16-9
16-3 Weekday Number of Vehicle Trips Per Day....16-11
16-4 Project Access Roadways and Roadway Characteristics....16-12
16-5 Project Vehicle Miles Traveled....16-13
16-6 Vehicle Miles Traveled Comparison....16-14
17-1 Existing Water Demand by Operation....17-2
17-2 Sitewide Energy Use in 2018....17-6
17-3 Sitewide Energy Use for Plan Concept 1 in 2050....17-20
17-4 Sitewide Energy Use for Plan Concept 2 in 2050....17-22
18-1 Ability of Alternative A (No Project) to Meet Project Objectives....18-12
18-2 Ability of Alternative B (Prioritize Waste Recovery) to Meet Project Objectives....18-17
18-3 Alternative C (No Organics Processing) Ability to Meet Project Objectives....18-21
18-4 Alternative D (Three-Bin Clean MRF) Ability to Meet Project Objectives....18-26
18-5 Significance of Potential Environmental Impacts Compared with Preferred Plan Concept....18-29

Figures

1-1 Regional Vicinity Map....1-2
1-2 Site Location Map....1-3
1-3 Existing Site and Uses....1-5
1-4 2018 Waste Material Flowchart....1-11
1-5 Existing Waste Recovery Operations....1-13
1-6 Existing WRSL Development Plan....1-29
1-7 Existing WRSL Environmental Monitoring Systems....1-33
1-8 WRSL Liner System....1-35
1-9 Existing WRSL Permitted Final Grading Plan....1-41
3-1 Plan Concept 1....3-10
3-2 2050 Waste Material Flowchart....3-13
3-3 Plan Concept 1 WRSL Anticipated Fill Sequence....3-29
3-4 Plan Concept 1 WRSL Elevation and Contours Estimated in Year 2050....3-31
3-5 Plan Concept 1 WRSL Final Closure Peak Elevation and Contours....3-33
3-6 Plan Concept 1 WRSL Environmental Monitoring Systems....3-37
3-7 Plan Concept 2....3-51
3-8 Plan Concept 2 WRSL Anticipated Fill Sequence....3-67
3-9 Plan Concept 2 WRSL Elevation and Contours Estimated in Year 2050....3-69
3-10 Plan Concept 2 WRSL Final Closure Peak Elevation and Contours....3-71
3-11 Plan Concept 1 WRSL Environmental Monitoring Systems....3-75
4-1 Plan Concept Near-Term Annual Capital Spending Estimates....4-5
5-1 Key Observation Points....5-9
5-2 KOP 1 –Existing Condition....5-11
5-3 KOP 2 –Existing Condition....5-12
5-4 KOP 3 –Existing Condition....5-13
5-5 KOP 4 –Existing Condition....5-15

5-6 KOP 5 –Existing Condition 5-17
5-7 Character Photograph 1 5-18
5-8 Character Photograph 2 5-19
5-9 Character Photograph 3 5-20
5-10 Character Photograph 4 5-21
5-11 Character Photograph 5 5-22
5-12 Character Photograph 6 5-23
5-13 Character Photograph 7 5-24
5-14 Character Photograph 8 5-25
5-15 Character Photograph 9 5-26
5-16 Representative Complementary and Programmatic Element – Biogas Plant 5-33
5-17 Representative Complementary and Programmatic Element – Biomass Facility 5-33
5-18 Representative Complementary and Programmatic Element – Warehouse 5-34
5-19 KOP 1 –Plan Concept 1 5-35
5-20 KOP 2 –Plan Concept 1 5-37
5-21 KOP 3 –Plan Concept 1 5-39
5-22 KOP 4 –Plan Concept 1 5-41
5-23 KOP 5 –Plan Concept 1 5-43
5-24 KOP 1 –Plan Concept 2 5-49
5-25 KOP 2 –Plan Concept 2 5-51
5-26 KOP 3 –Plan Concept 2 5-53
5-27 KOP 4 –Plan Concept 2 5-55
5-28 KOP 5 –Plan Concept 2 5-57
6-1 Wind Rose - Lincoln Regional Airport 6-9
7-1a CNDDB Plant Species Occurrences Within 5 Miles of the Proposed Project 7-3
7-1b CNDDB Animal Species Occurrences Within 5 Miles of the Proposed Project 7-5
7-2 Land Cover Types 7-9
7-3 Offsite Aquatic Resources 7-11
7-4 Special-Status Plants and Animals 7-37
8-1 Area of Potential Effects 8-2
9-1 Site Vicinity and Regional Topography 9-3
9-2 Regional Geologic Map 9-5
9-3 Regional Fault Map 9-9
9-4 Local Faults and Liquefaction 9-11
9-5 Soils 9-13
11-1 CalFIRE Fire Hazard Security Zones 11-9
12-1 Wetlands 12-5
12-2 FEMA Flood Zones 12-7
12-3 Surface Water Bodies in Project Site Vicinity 12-9
12-4 Site Map for Stormwater Management 12-11
12-5 MRF Drainage Map 12-13
12-6 Sampling/Monitoring Points 12-17
13-1 Placer County General Plan Land Use 13-3
13-2 Sunset Area Plan Land Use 13-5
13-3 Zoning 13-7
14-1 Effects of Doubling Sound Level Energy 14-1
14-2 Typical Levels of Ground-Borne Vibration 14-4
14-3 Location of Existing Residences 14-9
14-4 Plot of Sound Level versus Distance 14-22
14-5 Propagation Adjustment for Peak Particle Velocity 14-26

14-6 Propagation Adjustment for Root Mean Squared Velocity....14-26
16-1 Regional and Local Road Network....16-3
18-1 Alternative A: No Project Alternative....18-8
18-2 Alternative B: Prioritize Waste Recovery....18-13
18-3 Alternative C: No Organics Processing....18-18
18-4 Alternative D: Three-Bin Clean MRF Alternative....18-22

Acronyms and Abbreviations

°F	degree(s) Fahrenheit
µin/sec	microinch(es) per second
AB	Assembly Bill
ADC	alternative daily cover
ADT	average daily traffic
AFB	Air Force Base
afy	acre feet per year
AMSL	above mean sea level
APE	Area of Potential Effects
ASP	aerated static pile
BCE	Before Common Era
BMP	best management practice
BO	Biological Opinion
C&D	construction and demolition
CAAQS	California Ambient Air Quality Standards
CalEEMod	California Emissions Estimator Model
CalFire	California Department of Forestry and Fire
Cal OES	California Office of Emergency Services
C	Candidate (for listing)
Caltrans	California Department of Transportation
CARB	California Air Resources Board
CARP	Western Placer County Aquatic Resources Program
CAP	Corrective Action Program
CASP	covered aerated static pile
CBC	*California Building Standards Code*
CCR	*California Code of Regulations*
CDFW	California Department of Fish and Wildlife
CE	Common Era
CESA	California Endangered Species Act
CEQA	California Environmental Quality Act
CEV	controlled environmental vault
CFC	chlorofluorocarbon

CFD	Community Facilities District
CFP	Fully Protected Species (California)
CFR	*Code of Federal Regulations*
cfs	cubic foot (feet) per second
CGS	California Geological Survey
CHP	California Highway Patrol
CHRIS	California Historical Resources Information System
CHWMP	County's Hazardous Waste Management Plan
CIWMP	Countywide Integrated Waste Management Plan
cm/sec	centimeter(s) per second
CNDDB	California Natural Diversity Database
CNEL	Community Noise Equivalent Level
CNPS	California Native Plant Society
CNRA	California Natural Resources Agency
CRHR	California Register of Historical Resources
CVP	Central Valley Project
CRV	California Redemption Value
CVRWQCB	Central Valley Regional Water Quality Control Board
CWA	Clean Water Act
cy	cubic yard(s)
D	Delisted
dB	decibel(s)
dBA	A-weighted decibel(s)
dbh	diameter at breast height
DTSC	Department of Toxic Substances Control
E	Endangered
EA	Enforcement Agency
ECO	Eco-Industrial
EI	Eco-Industrial/Manufacturing/WPWMA District
EOP	Emergency Operations Plan
EPA	U.S. Environmental Protection Agency
EPS	Economic & Planning Systems
FEIR	Final Environmental Impact Report
FEMA	Federal Emergency Management Agency

FESA	Federal Endangered Species Act
FGC	*Fish and Game Code*
FHWA	Federal Highway Administration
FHSZ	Fire Hazard Severity Zones
FTA	Federal Transit Administration
GCCS	gas collection and control system
GCL	geosynthetic clay liner
GHG	greenhouse gas
GPS	global positioning system
GWP	global warming potential
H:V	horizontal to vertical
HCP	Habitat Conservation Plan
HDPE	high-density polyethylene
HHW	household hazardous waste
HVAC	heating, ventilation, and air conditioning
I	Interstate
IAEG	International Association for Engineering Geology
ILF Program	In-Lieu Fee Program
in/sec	inch(es) per second
IPCC	United Nations Intergovernmental Panel on Climate Change
ISO	Insurance Services Office
IWMA	California Integrated Waste Management Act
Jacobs	Jacobs Engineering Group Inc.
JPA	Joint Powers Authority
JTD	Joint Technical Document
kWh	kilowatt hour(s) per year
KOP	key observation point
lb/day	pound(s) per day
LCFS	low carbon fuel standard
LCRS	leachate collection and removal system
LEA	local enforcement agency
LFG	landfill gas
LHMP	Local Hazard Mitigation Plan
LID	low-impact development

LOS	Level of Service
LRA	Local Responsibility Area
MBI	Michael Baker International
MBTA	Migratory Bird Treaty Act
MCE	maximum credible earthquake
mgd	million gallons per day
mgy	million gallons per year
MLD	Most Likely Descendant
mm/yr	millimeter(s) per year
MMP	Mitigation and Monitoring Plan
mph	mile(s) per hour
MODA	Multi-Objective Decision Analysis
MPE	maximum probable earthquake
MPO	metropolitan planning organization
MRF	material recovery facility
msl	mean sea level
MSW	municipal solid waste
MT	metric ton(s)
MMT	million metric tons
MW	megawatt(s)
Mw	moment magnitude
NAHC	Native American Heritage Commission
NAAQS	National Ambient Air Quality Standards
NCCP	Natural Community Conservation Plan
NCIC	North Central Information Center
NPDES	National Pollutant Discharge Elimination System
NEHRP	National Earthquake Hazards Reduction Program
NHTSA	National Highway Traffic Safety Administration
NOP	Notice of Preparation
NOV	Notice of Violation
NPPA	Native Plant Protection Act of 1977
NRCS	Natural Resources Conservation Service
NRHP	National Register of Historic Places
NSPS	New Source Performance Standards

NSWD	Nonstormwater Discharges
OA	Operational Area
OES	Office of Emergency Services
OFMSW	organic fraction of municipal solid waste
OIMP	Odor Impact Minimization Plan
OFMSW	organics from mixed solid waste
OPR	Office of Planning and Research
OSHA	Occupational Safety and Health Administration
PCAPCD	Placer County Air Pollution Control District
PCB	polychlorinated biphenyl
PCCP	Placer County Conservation Program
PCE	tetrachloroethene
PCFCWCD	Placer County Flood Control and Water Conservation District
PCWA	Placer County Water Agency
PG&E	Pacific Gas & Electric Company
PHGA	peak horizontal ground acceleration
PPC	Public Protection Classification
ppmv	parts per million by volume
PPV	peak particle velocity
PRC	*(California) Public Resources Code*
project	Renewable Placer: Waste Action Plan
PRSP	Placer Ranch Specific Plan
QSE	Qualifying Storm Events
R	rare
RCRA	Resource Conservation and Recovery Act
RMDZ	recycling market development zone
RFP	Requests for Proposal
RMS	root mean square
ROWD	report of waste discharge
RWQCB	Regional Water Quality Control Board
SACOG	Sacramento Area Council of Governments
SAP	Sunset Area Plan
SB	Senate Bill
scfm	standard cubic feet per minute

SCS	SCS Engineers
SEMS	Standardized Emergency Management System
SGMA	Sustainable Groundwater Management Act
SHPO	State Historic Preservation Officer
SLCP	short-lived climate pollutants
SLTSM	Small Lot Tentative Subdivision Maps
SPMUD	South Placer Municipal Utility District
SPRR	Southern Pacific Railroad
SP	Special Purpose
SPL	Sound-pressure levels
SPWA	South Placer Wastewater Authority
SR	State Route
SRA	State Responsibility Area
SSC	Species of Special Concern
SVAB	Sacramento Valley Air Basin
SVP	Society of Vertebrate Paleontology
SWFP	Solid Waste Facilities Permit
SWMP	Stormwater Management Plan
SWOP	Site-Wide Odor Plan
SWQP	Stormwater Quality Pond
SWPPP	Stormwater Pollution Prevention Plan
SWRCB	State Water Resources Control Board
T	threatened
TCR	Tribal Cultural Resource
tpd	ton(s) per day
TPR	Transfer Processing Report
TSCA	Toxic Substances Control Act
UAIC	United Auburn Indian Community of the Auburn Rancheria
UFC	*Uniform Fire Code*
USACE	U.S. Army Corps of Engineers
USDA	U.S. Department of Agriculture
USFWS	U.S. Fish and Wildlife Service
USGS	U.S. Geological Survey
UWMP	Urban Water Management Plan

VdB	vibration decibel
VMT	vehicle miles traveled
VOC	volatile organic compound
WDR	Waste Discharge Requirement
WL	Watch List
WPCGMP	Western Placer County Groundwater Management Plan
WPWMA	Western Placer Waste Management Authority
Waste Action Plan	*Renewable Placer: Waste Action Plan*
WRSL	Western Regional Sanitary Landfill
WSA	Water Supply Assessment
WWTP	wastewater treatment plant
WWTRF	wastewater treatment and reclamation facility

1. Introduction

This Draft Environmental Impact Report (Draft EIR) has been prepared to evaluate the environmental impacts associated with implementing the Western Placer Waste Management Authority's (WPWMA's) *Renewable Placer: Waste Action Plan* (Waste Action Plan) (WPWMA 2020). The Waste Action Plan has been developed to identify the physical and operational Waste Recovery[1] and Waste Disposal[2] changes needed at the WPWMA facility to continue providing high-quality solid waste management services in response to a fast-growing population in an increasingly complex regulatory environment and rapidly changing global recycling markets. Furthermore, the WPWMA's Waste Action Plan has been developed to take advantage of local opportunities, which could serve to increase the diversion of recyclable materials and deliver these materials to local markets. As the fundamental goal of the Waste Action Plan, this approach of fostering the development of local markets is intended to spur environmentally focused innovation, create jobs and meet the goals of the Placer County Sunset Area Plan, and reduce the environmental impacts (including vehicle traffic, air emissions, and greenhouse gas emissions) associated with long-distance transport of recyclable commodities to domestic and foreign markets. Two concepts to implement the Waste Recovery and Waste Disposal changes associated with the Waste Action Plan (Plan Concept 1 and Plan Concept 2) are described in detail in Chapter 3, Project Description, of this Draft EIR. The two plan concepts represent different approaches to implementing the Waste Action Plan and are collectively referred to as the proposed project.

Section 1.1 defines the WPWMA. The project location, purpose, intended uses of this Draft EIR, and project objectives are presented in Sections 1.2 through 1.4. Section 1.5 identifies the baseline environmental conditions of the WPWMA's facility for the purposes of evaluating the proposed project, and Section 1.6 describes the existing activities that occur at the WPWMA facility. Sections 1.7, 1.8, and 1.9 describe the public review process for the Draft EIR, permits, and approvals necessary for the Waste Action Plan, and content and organization of the Draft EIR, respectively.

1.1 WPWMA

The WPWMA is a regional authority established in 1978 through a joint exercise of powers agreement between Placer County and the cities of Lincoln, Rocklin, and Roseville (Member Agencies) to own, operate, and maintain a sanitary landfill and related improvements. The WPWMA also provides solid waste services to the cities of Auburn and Colfax and the Town of Loomis; these entities and the Member Agencies are collectively referred to as Participating Agencies. The Participating Agencies are provided with solid waste recycling, recovery, and disposal services at the WPWMA facility. The WPWMA's service area encompasses a majority of Placer County in terms of geography (Figure 1-1) and population.

1.2 Project Location

The project site is located on the eastern edge of the Sacramento Valley in Placer County (Figure 1-1) between the cities of Roseville and Lincoln. The site is located on property owned by the WPWMA, generally at the intersection of Athens Avenue and Fiddyment Road, in parts of Sections 5, 6, and 31 of Township 11 North, Range 6 East, Roseville, California, 7.5-minute quadrangle, Mount Diablo Baseline and Meridian (Figure 1-2). The site's latitude and longitude, as determined at the Athens Avenue and

[1] Waste Recovery is primarily concerned with activities that divert from the solid waste stream those materials that can be reused, composted, or recycled for some other purpose, or those activities which occur in order to identify materials that can be removed from the waste stream and those which must become part of Waste Disposal.

[2] Waste Disposal is primarily concerned with landfilling; that is, the burial of solid waste in a landfill.

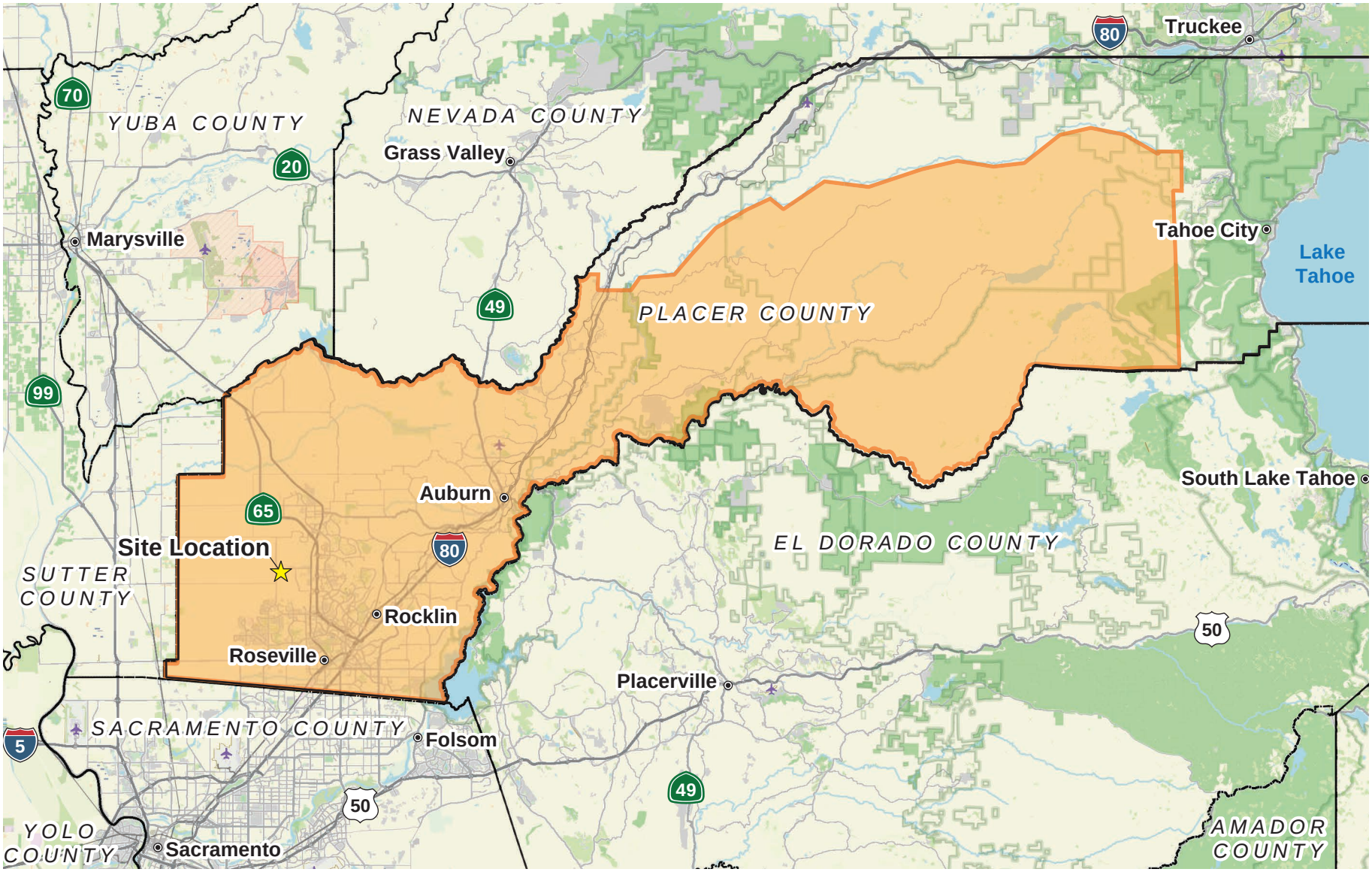

LEGEND

WPWMA Service Area

North

0 5 10

Approximate scale in miles

Figure 1-1. Regional Vicinity Map
Draft Environmental Impact Report
Renewable Placer: Waste Action Plan
Placer County, California

Jacobs

BI0213191718SAC 1-1v5

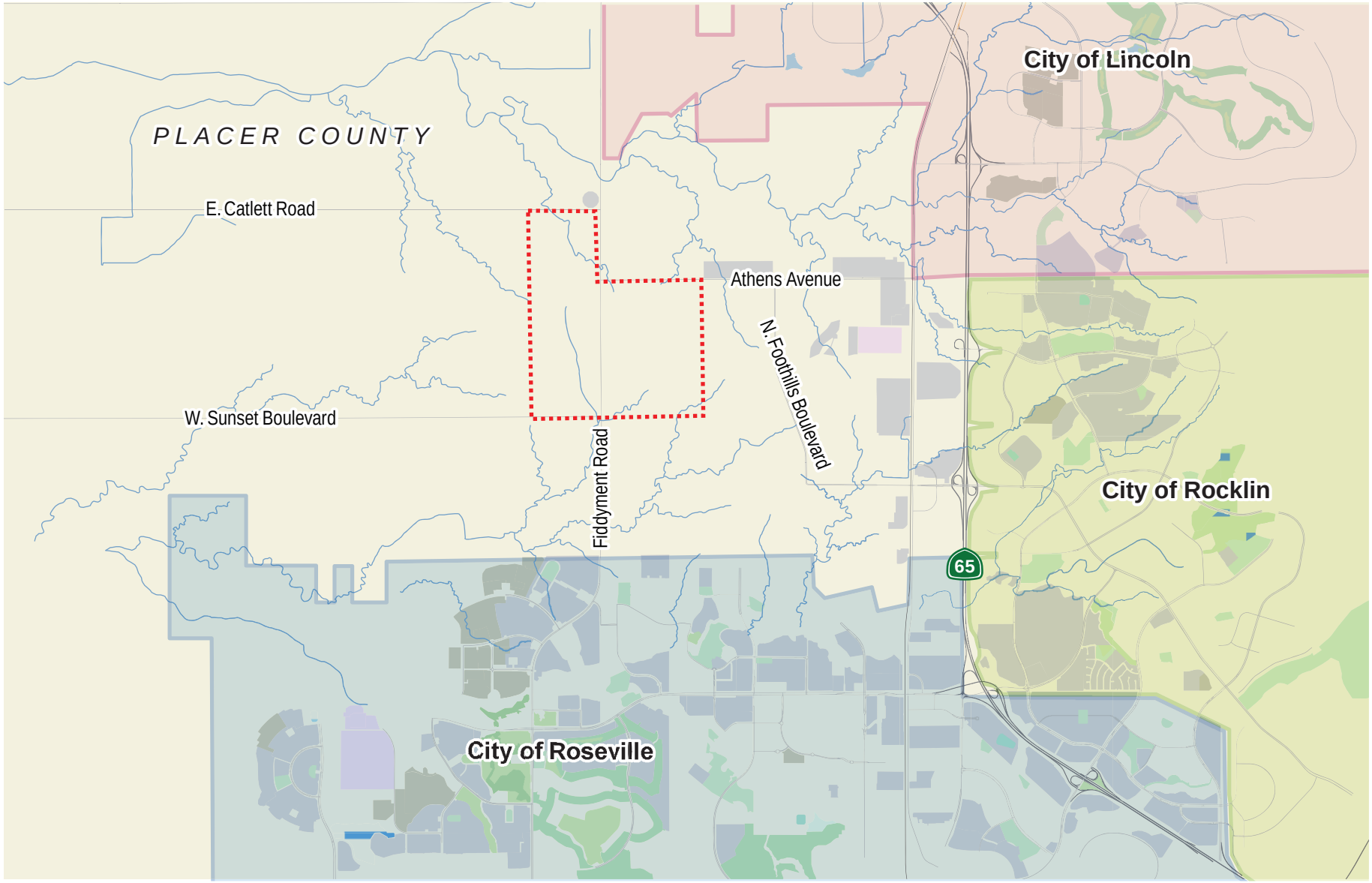

LEGEND

- Project Boundary
- Streams
- City of Lincoln
- City of Rocklin
- City of Roseville

North

0 4,000 8,000

Approximate scale in feet

Figure 1-2. Site Location Map
Draft Environmental Impact Report
Renewable Placer: Waste Action Plan
Placer County, California

Jacobs

BI0213191718SAC 1-2v3

Fiddyment Road intersection, are 38°50'19.97"N and 121°20'57.76"W, respectively. The site's immediate surroundings include rural agricultural lands with the exception of industrial uses located directly to the northeast.

The site includes three contiguous properties totaling 928 acres[3] (Figure 1-3). These properties are described as follows:

- Approximately 155-acre eastern property, which is leased by the WPWMA to a private entity for cattle grazing and is not currently permitted for solid waste operations.
- Approximately 314-acre center property, which includes the existing Material Recovery Facility (MRF) building, organics management operation, construction and demolition (C&D) materials processing area, public waste drop-off area, household hazardous waste (HHW) facilities, Western Regional Sanitary Landfill (WRSL), stormwater ponds, scale house facilities, landfill gas-to-energy plant, site entrance infrastructure, and a Pacific Gas & Electric Company (PG&E) transmission line easement.
- Approximately 459-acre western property, part of which is currently leased to the City of Lincoln for discharge of reclaimed water and a part of which is leased for model airplane operations. A sublessee of the City of Lincoln resides on this property in a single-story residential structure located at the end of the dirt road that extends directly west from the intersection of Athens Avenue and Fiddyment Road. The same PG&E transmission line easement that extends along the southwestern corner of the center property extends through the south-central part of this property. Solid waste uses on this property have already been subject to environmental review, and a conditional use permit to operate a landfill was previously granted by the Placer County Planning Commission; however, the property has not been fully permitted for solid waste related operations.

The WPWMA's mailing address is 3013 Fiddyment Road, Roseville, CA 95747. The assessor parcel numbers for each of the WPWMA properties are identified in Table 1-1.

Table 1-1. WPWMA Property Assessor Parcel Numbers

Project Properties	Assessor Parcel Numbers
Western Property	021-281-001-000, 021-281-002-000, 017-062-001-000, 017-062-002-000, 017-062-003-000
Center Property	017-063-001-000, 017-063-002-000
Eastern Property	017-063-003-000

[3] 928 acres corresponds to the total acres of each assessor parcel as listed in Placer County GIS, rounded. This may be slightly different from some of the acreages reported in previous documents for this project.

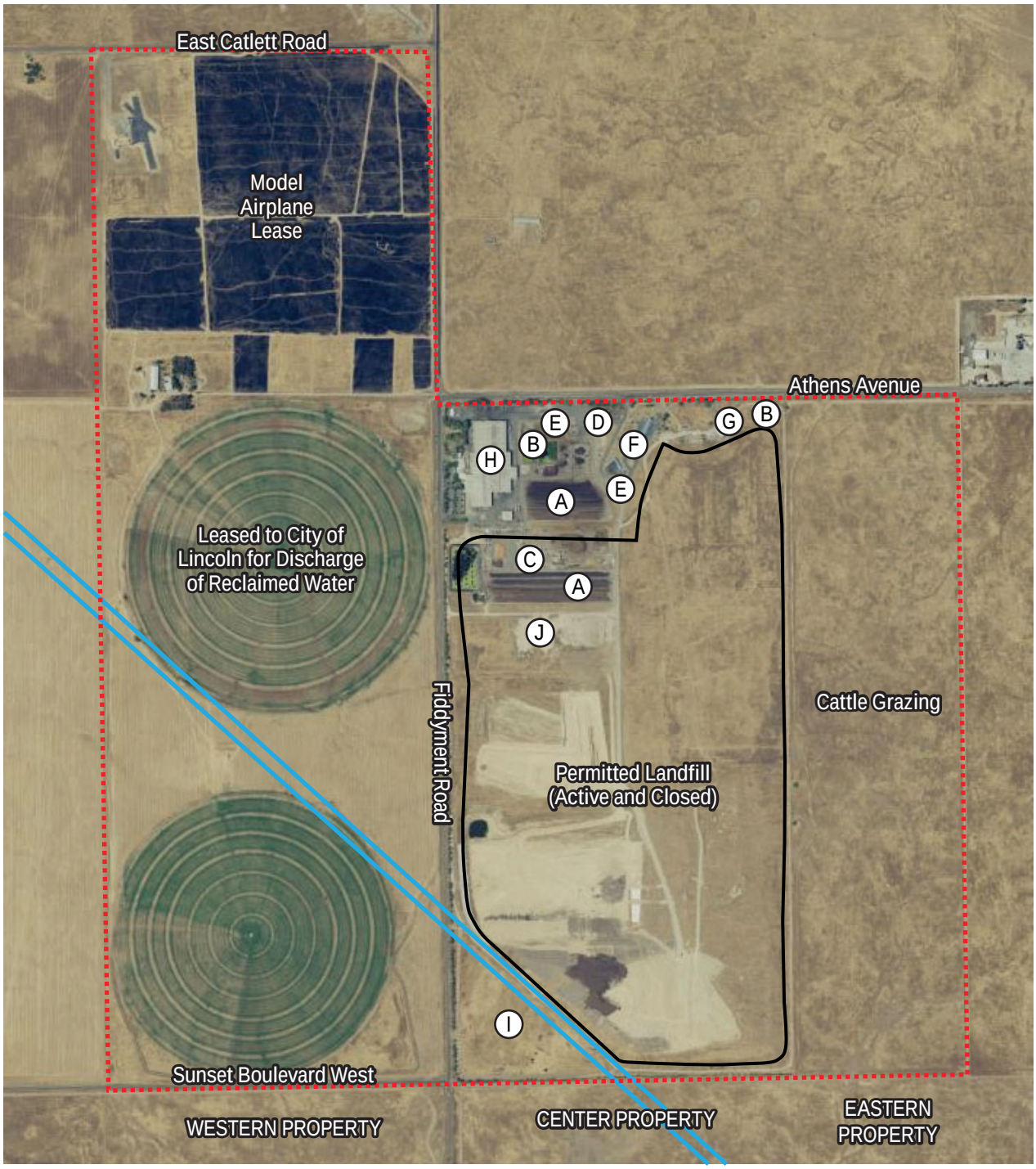

LEGEND

- (A) Organics Management Operation
- (B) Stormwater Ponds
- (C) Construction and Demolition Material Processing Operation
- (D) Entrance
- (E) Scalehouse Facilities
- (F) Public Waste Drop-Off Area
- (G) Landfill Gas-to-Energy Plant
- (H) Materials Recovery Facility Building
- (I) Stormwater Management and Biological Mitigation
- (J) Inert Materials Storage and Processing Area

- Project Boundary
- Landfill Footprint
- PG&E 230 kV Easement

Figure 1-3. Existing Site and Uses
Draft Environmental Impact Report
Renewable Placer: Waste Action Plan
Placer County, California

North

0 0.25 0.5

Approximate scale in miles

Jacobs

BI0213191718SAC 1-3v6

1.3 Purpose and Intended Uses of this Draft Environmental Impact Report

This Draft EIR was prepared in compliance with the California Environmental Quality Act (CEQA) of 1970 (*Public Resources Code* [PRC] Section 21000 et seq.) and the State CEQA guidelines (*California Code of Regulations* [CCR] Section 15000 et seq.). An EIR is a full disclosure, public information document in which the significant environmental impacts of a project are evaluated, feasible measures to mitigate significant impacts are identified, and alternatives to the project that can reduce or avoid significant environmental effects are discussed.

An EIR is an informational document used in the planning and decision-making process by the lead agency and responsible and trustee agencies. The lead agency is the public agency with primary responsibility over the proposed project. In accordance with State CEQA Guidelines Section 15051(a), "If the project will be carried out by a public agency, that agency shall be the Lead Agency even if the project would be located within the jurisdiction of another public agency." Because the proposed project is being carried out by the WPWMA, the lead agency for the proposed project is the WPWMA.

The purpose of an EIR is not to recommend either approval or denial of a project. CEQA requires decision makers to balance the benefits of a project against its unavoidable environmental effects in deciding whether to carry out a project. The lead agency will consider the Draft EIR, comments received on the Draft EIR, and responses to those comments before making a decision. If significant environmental effects are identified, the lead agency must adopt "Findings," indicating whether feasible mitigation measures or alternatives exist that can avoid or reduce those effects. If the environmental impacts are identified as significant and unavoidable, the lead agency may still approve the project if it determines that the social, economic, or other benefits outweigh the unavoidable impacts. The lead agency would then be required to prepare a "Statement of Overriding Considerations" that discusses the specific reasons for approving the project, based on information in the EIR and other information in the record (PRC Section 21002; State CEQA Guidelines Section 15093).

1.4 Project Objectives

Placer County, the majority of which is included in the WPWMA's service area, was the second-fastest growing county in California in 2018, according to the California Department of Finance, State Population Projections (May 2019). Based on land use projections included in the general plans of the Participating Agencies, the population served by the WPWMA is expected to nearly double over the next 30 years. In addition to projected population increases, the Participating Agencies are seeking ways to respond to simultaneous restrictions in global recycling markets and increasingly stringent state-mandated limitations on materials that can be disposed in California's landfills.

In anticipation of this projected growth, the WPWMA initiated a master planning effort in 2015 identified as the *Renewable Placer: Waste Action Plan*. The purpose of the Waste Action Plan is to identify the physical and operational changes needed at the WPWMA facility that will allow the facility to support future Waste Recovery and Waste Disposal needs for the rapidly growing communities it serves while complying with an increasingly complex regulatory environment and fluctuating global recyclables markets. The Waste Action Plan was also developed to maintain a stable cost structure for the Participating Agencies, improve operational efficiencies and customer safety, and continue to enhance compatibility between ongoing operations and current and future adjacent land uses.

The WPWMA developed the Waste Action Plan to articulate a long-term vision for optimizing the ongoing Waste Recovery and Waste Disposal services provided to the Participating Agencies. The objectives of the Waste Action Plan that would help achieve this vision are described as follows:

- Maintain a stable and relatively predictable cost structure through continued local-government control of solid waste management operations, improve operational efficiencies, and extend the operational life of the current WPWMA facility.
- Expand the site's capacity to divert materials from landfill disposal and contribute to greenhouse gas emission reductions through expanded organics management, improved recovery of C&D materials, recycling, and public buy-back activities.
- Increase the WRSL's permitted footprint and height to optimize the efficient use of land for Waste Disposal and so that sufficient Waste Disposal capacity is available to accommodate anticipated long-term growth in the Participating Agencies' waste streams.
- Enhance customer safety by improving site access and internal circulation, which would minimize potential conflicts between commercial vehicles and public users.
- Provide the WPWMA with operational flexibility to accommodate an increasingly complex and evolving regulatory environment and verify that operations associated with Waste Action Plan implementation are conducted in the most environmentally responsible manner possible.
- Facilitate the siting and development of compatible technologies that would benefit from proximity to the WPWMA.
  - Compatible technologies could include both proven and innovative recycling strategies intended to capitalize on an evolving local recyclable materials market and potentially reduce dependence on foreign markets.
  - Developing compatible technologies could promote state-mandated waste diversion goals, offset costs associated with ongoing solid waste operations, and generate innovative and creative economic opportunities within the County consistent with the Sunset Area Plan's objectives (Placer County 2019).
- Continue to improve compatibility between current and future WPWMA operations and existing and proposed adjacent land uses based on the surrounding area's anticipated transition to a more urban environment.
- Encourage implementation of the Placer County Conservation Program and the integration of environmentally conscious practices into the facility operations.
- Develop WPWMA properties consistent with the goals, policies, and implementation programs identified in the Sunset Area Plan (Placer County 2019).
- Position the WPWMA facility as a hub of innovation that promotes the development of a circular economy[4] in Placer County.

1.5 Existing Baseline Conditions

The State CEQA guidelines (CCR Section 15125[a]) state the following:

> An EIR must include a description of the physical environmental conditions near the project. This environmental setting will normally constitute the baseline physical conditions by which a lead agency determines whether an impact is significant. The purpose of this requirement is to give the

[4] A circular economy aims to redefine growth, focusing on positive society-wide benefits. It entails gradually decoupling economic activity from the consumption of finite resources, and designing waste out of the system. Underpinned by a transition to renewable energy sources, the circular model builds economic, natural, and social capital. It is based on three principles: design out waste and pollution, keep products and materials in use, regenerate natural systems. (https://www.ellenmacarthurfoundation.org/circular-economy/concept)

public and decision makers the most accurate and understandable picture practically possible of the project's likely near-term and long-term impacts.

(1) Generally, the lead agency should describe physical environmental conditions as they exist at the time the notice of preparation (NOP) is published, or if no NOP is published, at the time environmental analysis is commenced, from both a local and regional perspective. Where existing conditions change or fluctuate over time, and where necessary to provide the most accurate picture practically possible of the project's impacts, a lead agency may define existing conditions by referencing historical conditions, or conditions expected when the project becomes operational, or both, that are supported with substantial evidence. In addition, a lead agency may also use baselines consisting of both existing conditions and projected future conditions that are supported by reliable projections based on substantial evidence in the record.

(2) A lead agency may use projected future conditions (beyond the date of project operations) baseline as the sole baseline for analysis only if it demonstrates with substantial evidence that use of existing conditions would be either misleading or without informative value to decision makers and the public. The WPWMA issued an NOP for the project on March 15, 2019, and initiated preparation of the CEQA environmental review process. For this analysis, the baseline conditions for this Draft EIR are generally the conditions that existed on the three WPWMA-owned properties in 2019. For solid waste operations that fluctuate on a daily basis and to represent a full year of data, the baseline is based on averages from calendar year 2018, unless otherwise specified.

Chapters 5 through 17 of this Draft EIR present the existing environmental conditions on the project site and surrounding area, in accordance with the State CEQA guidelines (CCR Section 15125). This setting generally serves as the baseline against which environmental impacts are evaluated. However, because the center property currently includes extensive ongoing Waste Recovery and Waste Disposal activities, these operations are described in detail in the next section. In addition, a summary table is provided in Chapter 3, Project Description, that identifies how the proposed elements of both plan concepts evaluated in this Draft EIR would change from the baseline conditions. Additional discussion of the baseline for the proposed project is provided in Chapter 4, Approach.

1.6 Existing Waste Recovery and Waste Disposal Operations

1.6.1 Sitewide Operations

Waste and recyclable materials are currently received at the WPWMA site from two of the four waste collection franchise areas (Districts 1 and 4) in unincorporated Placer County, the cities of Roseville, Rocklin, Lincoln, Colfax, and Auburn, and the Town of Loomis. The WPWMA's service area, which encompasses the majority of the geographical area and population of Placer County, is depicted on Figure 1-1. The WPWMA facility is open 365 days a year to receive waste materials. The WPWMA is the legal owner and operator of all onsite operations and contracts with private firms to conduct day-to-day operations at the site.

Customers and materials enter the site from the main entrance on Athens Avenue, as shown on Figure 1-3. A left-turn lane is provided on Athens Avenue to prevent waiting westbound vehicles from blocking the road. Once vehicles enter the site, they stop for assessment at one of two scale house complexes, one for self-haul customers and the other for commercial customers. The scale house operator weighs the incoming material on one of the available scales or estimates the volume of the load and collects the appropriate disposal fee (tipping fee). Based on the contents of the load, the scale house operator directs the vehicle to the appropriate area of the site to unload the materials.

Figure 1-4 identifies the waste and recyclable materials and associated vehicles received at the WPWMA facility in 2018. As shown, the WPWMA facility received 483,968 tons of material and 292,551 vehicles in 2018. The majority of this material, approximately 400,738 tons, was initially associated with Waste Recovery operations, while the remainder, approximately 83,230 tons, was initially associated with Waste Disposal operations.

Waste Recovery operations are primarily permitted (with the exception of inert materials) under Solid Waste Facilities Permit (SWFP) No. 031-AA-0001. Waste Recovery includes MRF operations, compost operations (organics management), C&D waste operations, public waste drop-off area operations, and HHW facility operations. SWFP No. 031-AA-0001 allows for the receipt of waste and recyclable materials from 6:00 a.m. to 7:30 p.m. Monday through Saturday and from 6:00 a.m. to 5:00 p.m. Sundays and designated holidays. Designated holidays are January 1, Memorial Day, July 4, Labor Day, Thanksgiving, and December 25. Permitted material processing hours are from 6:00 a.m. to 11:30 p.m. Monday through Sunday. Additional facility maintenance and cleanup work may take place from 4:00 p.m. to 6:00 a.m. Monday through Sunday. SWFP No. 031-AA-0001 limits the total daily acceptance of waste materials to 1,750 tons per day and total customer traffic to 1,014 vehicles per day.

Waste Disposal operations are permitted under SWFP No. 031-AA-0210. Waste Disposal operations comprise operation of the WRSL and the receipt of inert materials. SWFP No. 031-AA-0210 allows for the receipt and disposal of materials from Monday through Saturday, 7:00 a.m. to 7:30 p.m. and Sunday 8:00 a.m. to 5:00 p.m. Ancillary operations, including equipment servicing and start-up, removal of temporary daily cover material, and preparation of the daily cell to receive waste, are allowed to occur between 6:00 and 7:00 a.m., Monday through Saturday, and between 7:00 and 8:00 a.m. on Sunday. Other onsite operations such as application of daily cover and landfill-related construction may extend to 8:30 p.m. SWFP No. 031-AA-0210 limits the total daily acceptance and burial of waste materials to 1,900 tons per day and total customer traffic to 624 vehicles per day.

Descriptions of the WPWMA's current Waste Recovery and Waste Disposal operations are provided in Sections 1.6.2 and 1.6.3, respectively.

Eastern Property

The WPWMA's eastern property, depicted on Figure 1-3, is not currently permitted for solid waste-related operations. The WPWMA currently leases the land to a private party for the purposes of grazing cattle.

Western Property

The WPWMA's western property, depicted on Figure 1-3, is not currently permitted for solid waste- related operations. The WPWMA currently leases a portion of the property to the City of Lincoln for the purposes of application of reclaimed wastewater, and it leases another portion of the property to the Associated Modelers of Sacramento for the purposes of operating a radio-controlled airplane flight club.

1.6.2 Waste Recovery Operations

Waste Recovery operations include the MRF building, organics management operations, C&D materials processing area, public waste drop-off area, and HHW facilities, each of which are described in Sections 1.6.2.1 through 1.6.2.4. Support and environmental control features common to Waste Recovery operations are described in Section 1.6.2.5, and traffic levels associated with Waste Recovery operations are described in Section 1.6.2.6.

Material Recovery Facility Building Operation

Location.

The MRF building is located in the northwestern corner of the center property, as shown on Figure 1-5. Access to the MRF is provided through the main site entrance gate on Athens Avenue.

Material – Source, Type, and Amount.

Most residential and commercial municipal solid waste (MSW) is sent directly to the MRF building for processing. In addition to the MSW that is sent directly to the MRF building, MSW received at the public waste drop-off area (discussed in Section 1.6.2.4) is also transported to the MRF building for processing. At the MRF, salvageable materials are recovered to be recycled or reused. This includes newspaper, mixed paper, cardboard, ferrous and nonferrous metals, glass, plastics, green waste, wood waste, inert materials, electronic devices, and HHW. Additionally, other materials legally prohibited from disposal at the WRSL are recovered to protect the landfill and the surrounding environment. Recovery of these various materials reduces the amount of waste ultimately received and disposed at the WRSL.

The baseline amount of MSW received and processed at the MRF building in 2018 is shown in Table 1-2 and is based on WPWMA scale house records.

Table 1-2. 2018 Baseline Material Recovery Facility Building Tonnages

Baseline Criterion	Tonnage Quantity
Average weekday acceptance rate	822
Peak daily acceptance rate (occurred on 11/30/2018)	1,091
Average of 10 highest daily acceptance rates	903
Total (annual) accepted and processed	240,068

Source: WPWMA 2020

Operation.

MSW received at the MRF building is initially placed on the receiving floor. Once on the floor, wastes are managed by front-end loaders with some manual separation. The wastes are either stockpiled or directly pushed into one of six walking floor pit conveyors: five of these lines direct the wastes to the processing and sorting area, and the sixth conveys nonrecyclable wastes to a truck for transport to the WRSL. MSW is processed each weekday and some may remain on the receiving floor overnight to facilitate the start of operations the following day.

Pit conveyors transport the MSW from the receiving area to the processing area. The first stage of processing involves human-based pre-sort and debagging (mostly to protect the equipment), followed by mechanical sorting during which the wastes pass through rotating trommels to separate the materials by size. Following the trommels, wastes are further screened by using disk screens to separate materials by dimension (that is, two-dimensional items such as paper and three-dimensional items such as bottles and

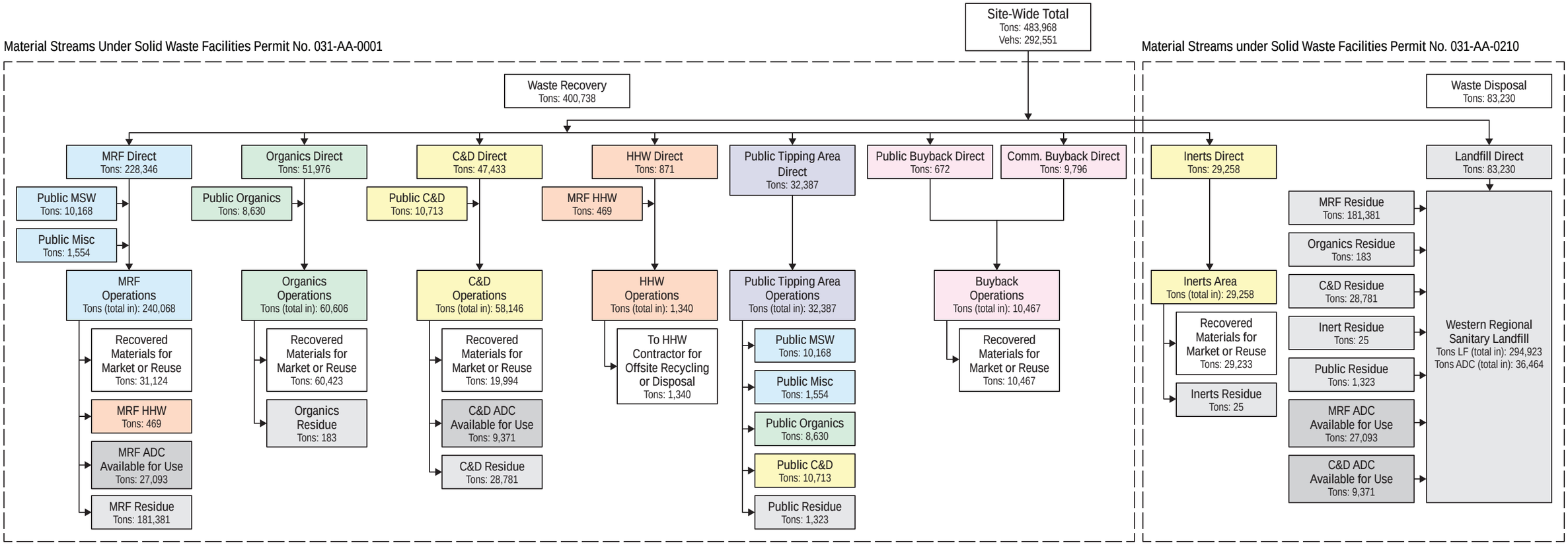

GENERAL NOTES

1. This flow diagram has been prepared for planning purposes and for use in the preparation of the Renewable Placer Waste Action Plan EIR.
2. This flow diagram includes actual 2018 tonnage and incoming vehicle quantities.
3. Only customer vehicle counts are presented. Internal site vehicles are not shown.
4. Total inbound and total outbound values may not equate exactly due to rounding.

Figure 1-4. 2018 Waste Material Flow Chart
Draft Environmental Impact Report
Renewable Placer: Waste Action Plan
Placer County, California

Jacobs

Figure 1-5. Existing Waste Recovery Operations
Draft Environmental Impact Report
Renewable Placer: Waste Action Plan
Placer County, California

North

0 0.25 0.5

Approximate scale in miles

Jacobs

BI0213191718SAC 1-5v2

cans) and to remove fines, dirt, and grit. After the screening, the materials are conveyed over a series of sorting tables where recoverable products are removed and placed into temporary storage bunkers. Most of the recovered products are conveyed to baler units for consolidation (including paper, newspaper, cardboard, plastics, and some metals).

The bales are stored in the bale warehouse, outside on the southern end of the warehouse, along the southern boundary of the MRF building, or along the fence of the northern compost pond before being transported to market. Other materials such as glass, green and wood waste, inerts, electronics, and HHW are transferred to other parts of the facility for additional processing or sale. Fine materials[5] are further screened to remove products larger than a half-inch, such as food waste, and are subsequently sent to the WRSL for use as alternative daily cover (ADC). Nonrecovered materials are conveyed to top-loading transfer trailers, which are used to transport these materials to the WRSL for disposal.

Of the material processed at the MRF building in 2018, approximately 13 percent was recovered for market or reuse; less than 1 percent was HHW, either shipped offsite or taken to the HHW facility for further management; 11 percent was used for ADC at the WRSL; and 76 percent was disposed in the WRSL.

Odor Management.

The materials processed at the MRF building include organic materials and other putrescible wastes that have the potential to emit odors as they begin to decompose.

Best management practices (BMPs) for odors at the MRF focus on timely and consistent processing of the materials and regular housekeeping and cleaning of the facility to avoid the accumulation of potentially odiferous materials. These BMPs are identified as follows:

- Process waste materials within 48 hours of receipt. For the purposes of this BMP, "process" means to sort the materials to recover marketable commodities and transport the residue to the WRSL for burial.
- Screen ADC generated from MRF fines to a 0.5-inch minus size, thereby reducing the potential for larger pieces of food waste to be present. The MRF operator is responsible for regularly inspecting and properly maintaining the ADC screening system to maintain this material sizing standard.
- Transport all ADC to the WRSL the same day it is produced at the MRF. No overnight storage of ADC is allowed.
- Transport residual wastes to the WRSL the same day they are produced. Limit overnight storage of residue in trailers to situations in which the MRF is operated outside of the landfill waste acceptance hours.
- Continuously operate the stormwater pond aeration system to the degree that the aerators are fully submerged so that the dissolved oxygen level in the pond is greater than 1 milligram per liter.

[5] Fine materials are also referred to as "fines" and "MRF fines" and refer to the finely crushed material, dirt, and grit that remains when larger material is sorted out at the MRF.

Organics Management Operation

Location.

The organics management operation is generally located to the east and south of the MRF building (Figure 1-5) and includes a material receiving and processing area, two concrete composting pads with windrows that are built on top of the concrete pads to process the organic material, finished product screening and storage areas, and two compost leachate evaporation ponds.

Material – Source, Type, and Amount.

Currently, approximately 96 percent of the material the WPWMA composts consists of green waste from commercial and residential haulers. Green waste generally refers to landscape wastes consisting of leaves, grass clippings, weeds, yard trimmings, wood waste, branches, stumps, home garden residues, and other miscellaneous organic materials. A small amount of food waste is received as part of a pilot-level study. As depicted on Figure 1-4, roughly 86 percent of compost material in 2018 arrived directly at the organics management operation, and 14 percent was received at the public waste drop-off area and transported to the organics management operation.

The baseline amount of green and food waste received and processed at the organics management operation in 2018 is shown in Table 1-3 and is based on WPWMA scale house records.

Table 1-3. 2018 Baseline Organics Management Operation Tonnages

Baseline Criterion	Tonnage Quantity
Average weekday acceptance rate	193
Peak daily acceptance rate (occurred on 12/6/2018)	482
Average of 10 highest daily acceptance rates	375
Total (annual) accepted and processed	60,606

Source: WPWMA 2020

Operation.

As green waste is received at the organics management operation, it is chipped and ground at the preprocessing area, which has a capacity of approximately 400 tons per day (WPWMA 2014). The chipping and grinding operations are conducted by using mobile equipment located on concrete pads. As food waste is received, it is blended with ground green waste to avoid the potential for nuisances (for example, odors and vectors).

Chipped and ground green waste is stored in the preprocessing area prior to transport to one of the two compost pads. The duration that green waste is stored within the preprocessing area is minimized to reduce the potential for nuisances (odors, vectors). Once the preprocessed green waste is delivered to the compost pads, it is either placed into open windrows or mixed with food waste and formed into static piles that are aerated via a series of perforated pipes (WPWMA 2014).

The WPWMA generally composts by using an open windrowing method. However, it recently conducted a pilot-level study to evaluate co-composting of green and food waste, using an aerated static pile (ASP) composting method. The WPWMA is currently working with the Placer County Air Pollution Control District

(PCAPCD) to permit full-scale ASP composting and will retain approval to use windrow composting for the non-food portion, approximately half of the feedstock, under current permitting.

In the case of windrowed materials, the piles are periodically watered (using a water truck), turned (using a diesel-powered windrow turner or loader), and monitored manually to maintain sufficient temperature levels for decomposition and to achieve pathogen reduction. The compost remains in windrows for a period of at least 8 weeks (WPWMA 2014).

In the case of ASP, the materials are initially wetted. Air is then periodically applied by blowers connected to perforated pipes underneath the piles. Aeration is used to maintain a temperature range similar to that of windrowing for the purposes of achieving decomposition and pathogen reduction. The WPWMA has not determined the appropriate amount of time that material needs to remain in the ASP system; current estimates suggest the timing could be between 6 and 9 weeks (WPWMA 2014).

Following completion of the active composting process (windrow and ASP), the material is moved to static piles and allowed to cure, screened (using a diesel-powered trommel screening device located within the compost pad area), and then marketed for sale and removed from the site. All composting activities occur outdoors.

The windrows are managed to minimize runoff or generation of leachate. Water that seeps through the windrows is collected and managed in the leachate drainage control system, which drains into two collection ponds. The collection ponds are designed to prevent collected compost leachate from leaving the facility. The southern pond is sized for a 25-year return period followed by an average storm year; the northern pond is not sized for a particular design storm year (WPWMA 2020) but is currently being reconstructed to contain runoff from the average annual precipitation plus 0.7 times the standard deviation (approximately 30.56 inches of rain) plus the runoff from a 25-year, 24-hour (3.95 inches) storm. If necessary, to avoid overflowing the ponds, compost leachate may be reused in the composting operation or disposed to the sanitary sewer via a temporary discharge permit with the sewer utility.

As shown on Figure 1-4, of the material received at the organics management operation in 2018, less than 1 percent was identified as a noncompostable contaminant (for example, plastic) or was unsuitable for composting (for example, palm fronds) and was transported to the WRSL for disposal.

Organics Management Operations Odor Management.

Green waste and a small amount of food waste are received directly at the organics management operation. Other organic materials that may be composted, such as paper, will generally be received as part of the MSW stream at the MRF that is recovered by the MRF operator and subsequently transported to the organics management operation.

As received, green waste generally has a relatively low odor potential, as sufficient oxygen is available to prevent significant anaerobic conditions. However, during certain parts of the year (typically early spring and fall) when there may be alternating cycles of warm weather followed by rain, the amount of grass clippings or leaves received at the WPWMA facility can increase dramatically. In some cases, the green waste can already have entered a semi-anaerobic phase (and begin producing odors) before being received at the site.

Food waste will most often exhibit a high odor potential upon receipt at the organics management operation. As such, prompt processing and blending of food waste or more highly odiferous green waste materials with processed, shredded green waste will help to minimize the odor potential from the organics management operations.

Commercial composting facilities in California are required to implement an Odor Impact Minimization Plan (OIMP), as codified in CCR Title 14 (Natural Resources), Division 7 (CalRecycle CIWMB), Chapter 3.1 (Compostable Materials Handling Operations and Facilities Regulatory Requirements), Article 3 (Report of Facility Information), Section 17863.4 (Odor Impact Minimization Plan). The OIMP process relies on a philosophy of constant improvement rather than prescriptive standards. The OIMP describes design and operational procedures for minimizing odors, topographic and meteorological conditions, and a complaint response protocol.

The OIMP describes potential sources of odor and the odor control measures currently being implemented at the WPWMA's organics management operation. The WPWMA's OIMP was updated in 2016 for the organics management operation through October 2020. As part of the documents prepared for permitting ASP composting with the PCAPCD, the WPWMA updated the OIMP for use in 2021 and beyond.

In accordance with the OIMP, WPWMA implements several BMPs to reduce the potential for organics management operation odors to be perceived by nearby receptors, identified as follows:

- Perform initial processing (grinding) of green materials within 7 calendar days of receipt.
- Limit windrow composting methods to green waste only unless otherwise approved, in writing, by the local enforcement agency (LEA). All other materials will be composted using ASP methods.
- Maintain materials in the composting windrows for at least 8 weeks.
- Continuously operate the compost pond aeration system to the degree that the aerators are fully submerged so that the dissolved oxygen level in the pond is greater than 1 milligram per liter.

Construction and Demolition Materials Processing Operation

Location.

The existing C&D materials processing operations include two distinct areas: the inerts area for nonwaste materials, including primarily clean soil, concrete, brick, tile and rock, and the C&D operation area that includes a covered receiving area and C&D materials processing line. The inerts area is located south of the southern compost pad, and the C&D operation area is located between the northern and southern compost pads and adjacent to the green and wood waste tipping pad (Figure 1-5).

Material – Source, Type, and Amount.

Prior to 2007, WPWMA did not distinguish between MSW and C&D. As a result, all mixed wastes were directed to the MRF for processing and material recovery. In 2007, the California Building Standards Commission developed green building standards, which required a minimum diversion level of materials from landfilling in an effort to meet the goals of AB 32. In response, WPWMA established a separate C&D processing area and contractually required its facility operator to achieve a minimum 50 percent diversion of all C&D materials sent to the facility. At the time, the WPWMA estimated that C&D comprised approximately 10 percent of the total mixed-waste stream received at the facility. Improvements made to the MRF in 2005 increased MRF processing capacity to approximately 2,000 tons per day (inclusive of C&D), including a separate C&D materials processing area sized to accommodate approximately 200 tons per day of materials.

As depicted on Figure 1-4, roughly 82 percent of C&D material in 2018 arrived directly at the C&D operation, and 18 percent was received at the public waste drop-off area and transported to the C&D materials processing operation. For inerts, 100 percent of the material in 2018 arrived directly at the inerts area.

Similar to the MRF building, at the C&D materials processing area, salvageable materials, including C&D (for example, concrete, brick, rock, wood, drywall, clean soil), cardboard, ferrous and nonferrous metals, glass, plastics, green waste, wood waste, inert materials, appliances, wall board, electronic devices, and HHW or other materials legally prohibited from disposal at the WRSL are recovered for market or reuse, thereby reducing the amount of waste ultimately received and buried at the WRSL.

The baseline amount of C&D material received and processed at the C&D materials processing area in 2018 is shown in Table 1-4 and is based on WPWMA scale house records.

Table 1-4. 2018 Construction and Demolition Material Tonnages

Baseline Criterion	Tonnage Quantity
Average weekday acceptance rate	160
Peak daily acceptance rate (occurred on 3/20/2018)	278
Average of 10 highest daily acceptance rates	169
Total (annual) accepted and processed	58,146

Source: WPWMA 2020

In 2018, the WPWMA received 29,258 tons of inert material (under SWFP No. 031-AA-0210 as part of Waste Disposal operations).

Operation.

In the C&D materials processing line, material is initially placed on the receiving floor where hand sorting is used to remove larger salvageable items such as wood, metal, wall board, and appliances. Following the initial floor sort, the remaining materials are pushed into a walking floor pit conveyor, using a front-end loader, or picked and placed onto a walking floor with an excavator. The materials are then conveyed to a series of vibrating screens to remove fines and other smaller materials before passing through a magnet and along a sorting conveyor. Once on the conveyor, sorters recover salvageable items; nonrecovered materials are top loaded into transfer trailers for subsequent transport to the WRSL for disposal. Fines recovered during the screening process are subsequently sent to the WRSL for use as ADC (in conjunction with the fines recovered at the MRF for the same purpose). In the inerts area, inert materials are received and stockpiled until they are processed or reused.

The WPWMA's operator endeavors to process a majority of C&D material on the same day that it is received, although given current acceptance rates of the material, it is common that unprocessed material remains on the receiving floor overnight. Inerts are processed as needed.

As shown on Figure 1-4, approximately 34 percent of material processed at the C&D materials processing operation in 2018 was recovered for market or reuse, 16 percent was transported to the WRSL for use as ADC, and 50 percent was transported to the WRSL for disposal.

The inerts area is used to receive, stockpile, and eventually process inert material that is received at the WPWMA facility. In 2018, the vast majority of processed inerts was used beneficially onsite or sold for offsite use, and a tiny amount was disposed of in the WRSL.

Public Waste Drop-Off Area Operations

The public waste drop-off area is composed of a gatehouse complex with vehicle queuing lanes and various facilities where the public can drop off a variety of self-haul materials. Facilities include a waste tipping area, buy-back center, and HHW facility. Each is described in the following sections.

Public Waste Tipping Area (Z-Wall).

Location

The public waste tipping area is one of several components of the existing public waste drop-off area, located in the northern portion of the center property (Figure 1-5).

Material – Source, Type, and Amount

The public can drop off a variety of self-haul materials, including MSW, C&D material, electronic wastes, tires, and appliances at the public waste tipping area, referred to as the "Z-Wall." In general, material received at the Z-Wall may include any of the materials accepted for Waste Recovery or Waste Disposal.

Based on WPWMA scale house records, approximately 32,387 tons of material were received at the Z-Wall in 2018.

Operation

Upon arrival at the public area gatehouse, members of the public are generally directed to the Z-Wall to unload their wastes. The Z-Wall has multiple elevated drop-off slots for customers to back into and unload their materials over a guardrail into roll-off bins located below. Mixed-waste loads are dumped into roll-off bins at the Z-Wall, while green and wood waste loads are directed to the green and wood waste processing area located near the C&D materials processing area. Once the roll-off bins are filled, they are transported by the facility operator to the MRF building, C&D materials processing area, or WRSL after being weighed at the scale house. Self-haul customers transporting mixed waste in larger vehicles that may be difficult or unsafe to unload at the Z-Wall may be directed to unload on the MRF receiving floor or at the C&D materials processing area.

Chlorofluorocarbon (CFC) and non-CFC-containing white goods (e.g., refrigerators, washers and dryers) are accepted at the Z-Wall, separated by type, and transported to the MRF building for subsequent processing. Devices containing cathode ray tubes, electronic devices, and other universal wastes accepted at the Z-wall as well as those that are removed from the waste stream are temporarily stored until they are transported to the appropriate offsite recycling and processing facility.

As shown on Figure 1-4, approximately 36 percent of material received at the Z-Wall in 2018 was transported to the MRF building for processing, 27 percent was transported to the organics management operation for processing, 33 percent was transported to the C&D materials processing operation, and 4 percent was transported to the WRSL for disposal.

Buy-back Center Operation.

Location

The buy-back center is one of several components of the existing public waste drop-off area, located in the northern portion of the center property (Figure 1-5). The buy-back center is co-located with the HHW receiving area (discussed further in this section).

Material – Source, Type, and Amount

The buy-back center accepts clean, source-separated recyclables (for example, cardboard and mixed paper) free of charge (from Public or Commercial customers) and glass, plastic, and aluminum beverage containers (with a CA redemption value) can be turned in for a refund.

Based on WPWMA scale house records, approximately 10,467 tons of material were received at the buy-back center in 2018.

Operation

Upon arrival at either the main commercial scale house (for larger loads that need to be weighed) or the public area gatehouse, customers with source-separated recyclables are directed to the buy-back area. From the buy-back center, materials are prepared for shipping offsite for further management. As shown on Figure 1-4, 100 percent of material received at the buy-back center was recovered for market or reuse.

Household Hazardous Waste Facility Operation.

Location

The HHW Facility Operation includes activities at the HHW receiving area (co-located with the buy-back center and one of several components of the existing public waste drop-off area) and at the HHW building, which is located directly north of the MRF building (Figure 1-5).

Material – Source, Type, and Amount

HHW at the WPWMA facility generally consists of the types of wastes generated by households that are prohibited from disposal in the WRSL. HHW primarily consists of paint and solvents; used motor oil and filters, anti-freeze, and other automotive fluids; cleaning products; pool and garden chemicals; aerosol cans; sharps and medications except controlled substances; auto batteries; and household batteries.

The HHW receiving area that is co-located with the buy-back center receives HHW from the public and small-quantity generators. The HHW building (north of the MRF building) primarily receives and processes HHW recovered from other operations on the site, including from the public waste drop-off area, buy-back/HHW area, MRF building operation, C&D materials processing operation, and organics management operation. Occasionally, customers with HHW are sent directly to the HHW building for drop off. Public customers may also periodically be directed to the HHW building on weekends to reduce the impact on the public waste drop-off area.

As depicted on Figure 1-4, roughly 65 percent of HHW in 2018 arrived directly at either the HHW receiving area or HHW building, and 35 percent was recovered from the processing of MSW and C&D materials.

Operation

The HHW facilities are generally used for receiving, categorizing, packaging, and loading materials onto trucks for shipment offsite for recycling or disposal. As shown on Figure 1-4, approximately 1,340 tons of HHW were removed from the site in 2018 for recycling or offsite disposal.

Waste Recovery Support Facilities, Nuisance Controls, and Load Checking

The support facilities, nuisance control measures, and load-checking operations for the Waste Recovery operations are discussed as follows.

Waste Recovery Operations Support Facilities.

The MRF building, organics management operation, C&D materials processing area, and public waste drop-off area include various support facilities intended to promote safe and efficient operations as well as the protection of public health and the environment. These support facilities are depicted on Figure 1-5 and include the following:

Maintenance Area – The maintenance area is located south of the MRF building. The area includes a maintenance building and an outdoor storage and staging area for equipment requiring maintenance. The maintenance area currently serves the equipment maintenance needs for all of the waste operations on the site, including the WRSL.

Administration Building – The current administration building is attached to the MRF building with a parking lot located adjacent to the building. The administration building includes offices for WPWMA and facility operator staff as well as the WPWMA's Board of Directors Chambers.

Fire Fighting Equipment – Most structures at the site are equipped with a sprinkler system that will turn on automatically in case of a fire. The MRF building (exclusive of the offices) is equipped with automated roof-mounted heat/smoke vents.

Fire hydrants are located

- Near the Athens Avenue entrance
- On the northern side of the MRF office
- In the MRF parking lot
- Along the western side of the composting pad
- Along the southern MRF boundary, near the vehicle maintenance building and fuel tanks

Fire extinguishers and hose bibs where water can be drawn for firefighting are located throughout the facility.

Surface Water Drainage System – The drainage system consists of ditches, berms, culverts, two MRF and two stormwater detention basins, and two compost leachate retention basins. All noncontact water[6] is directed to the stormwater detention basins for eventual discharge offsite. Contact water from the organics management and C&D operations is conveyed to the compost leachate retention ponds; all other contact water is disposed to the sanitary sewer system onsite or trucked to an offsite sanitary sewer system.

[6] Water that does not come into contact with waste. Water that does come into contact with waste materials is referred to as "contact water."

Parking Facilities – Onsite parking is provided for vehicles and equipment associated with solid waste operations, including employee vehicles. The onsite overnight transfer trailer parking area is approximately 40,000 square feet in size. It is used to park up to 12 transfer trailers containing residue materials from the MRF building or C&D materials processing operation in situations where these facilities are operated after the WRSL has ceased accepting waste for the day. Any stored residual materials are transported by semi-trucks the following day to the WRSL for disposal. This area may also be used to store other operational vehicles and equipment.

Lighting – Pole-mounted lights illuminate internal roads, driveways, parking areas, and outdoor areas across the site. Lighting inside each building or structure (for example, covered receiving area for C&D) is designed to industry standards for an industrial facility.

Site Security – A 6-foot-high chain-link fence lies between the public right-of-way and the waste receiving and processing areas. The fence has locking gates at all traffic access points: the Athens Avenue entrance; the internal road to the WRSL; and the employee parking lot adjacent to the office. The southern compost area is topographically constrained by a vegetative barrier and posted with signs declaring no unauthorized access.

Water Supply – The Placer County Water Agency supplies potable water and fire suppression water to the site. Water for washing and drinking is available in the administration building breakroom and all restrooms. The water system provides water to emergency eyewash and shower stations located throughout the site.

An onsite production well located adjacent to the facility entrance provides nonpotable water for composting operations, landscape irrigation, and dust control. This production well was decommissioned in June 2021. Nonpotable water from the compost leachate ponds can be reused in the composting process. Municipal reclaimed water may also be periodically used in the composting process and for landscape irrigation and dust control in lieu of other onsite nonpotable water supplies.

Waste Recovery Operations Nuisance Control Measures.

The following measures have been established at the site to eliminate or minimize nuisances associated with Waste Recovery operations.

Dust Control – The major sources of dust occur during the unloading and processing of MSW loads in the receiving area of the MRF and during receiving and processing of green waste, wood waste, and C&D materials. The following measures are implemented to control dust at the site:

- Dust generated from material being unloaded or from loading the in-feed conveyors is substantially contained within the receiving area.
- Misters are used to minimize dust along the sorting lines and in the receiving area.
- Dust generated from processing wood waste, green waste, and C&D materials is controlled with water spray.
- Weekly sweeping of all paved areas is conducted by the facility operator.
- Dust from the composting operation is minimized by maintaining appropriate moisture content of the compost.
- Green and wood waste grinding and compost windrow turning operations are minimized during windy conditions.

Litter Control and Illegally Dumped Waste – The site's perimeter fence contains most windblown litter within the property. Litter is routinely collected from all areas within the site, including drainage ditches. The Waste Recovery facility operator also performs regular litter collection from streets adjacent to the site generally daily within 1 mile and weekly up to 2 miles from the facility entrance.

The Waste Recovery facility operator is responsible for the daily patrol and cleanup of illegally dumped waste and litter on the following sections of roadway:

- Athens Avenue: Fiddyment to Industrial
- Industrial Boulevard: 12 Bridges to 1 mile south of Athens
- Fiddyment Road: 1 mile north of Athens to 2 miles south of Athens
- Foothills Boulevard North: Athens to Sunset Boulevard West

The Waste Recovery facility operator is also responsible for the weekly patrol and cleanup of illegally dumped waste on the following sections of roadway:

- Fiddyment Road: 2 miles south of Athens Avenue to Blue Oaks Boulevard
- East Catlett Road: Fiddyment Road to 1 mile west on East Catlett Road
- Sunset Boulevard West: Fiddyment Road to 1 mile west on Sunset Boulevard West and Highway 65 to North Foothills Boulevard
- Industrial Boulevard: 1 mile south of Athens Avenue to Sunset Boulevard West

Nuisance Control – The facility was designed and is operated to preclude a public nuisance problem. Measures to minimize odors and the attraction and propagation of flies, rodents, and other vectors include the following:

- MSW and C&D is required to be processed within 48 hours of receipt, and residue (nonrecyclables) generated or segregated as part of this processing is transported to the WRSL for disposal.
- An overnight storage area is available for transfer trailers containing MSW or C&D residue generated after the WRSL has ceased accepting waste for the day. The openings in the trailers are covered to minimize odors and vector attraction and breeding. Residue stored overnight is hauled the following day to the WRSL for disposal.
- All wastewater from the processing operation (wash down) is disposed in the sanitary sewer system for treatment at the City of Roseville's wastewater treatment plant.
- The MRF tipping floor is scraped daily with a rubber plate attached to all loader buckets.
- A designated crew removes wastes on a daily basis that have accumulated around and under the MRF and C&D processing equipment and sorting lines as a result of processing operations.

Odor Monitoring and Investigations – As discussed previously for the WPWMA's MRF building operation and organics management operation, the WPWMA implements an OIMP for the organics management operation and additional BMPs for the MRF building operation and organics management operation. In addition to the BMPs identified for these odor-producing activities, the WPWMA also implements a sitewide continuous odor-monitoring and dispersion-modeling system and meteorological station. The odor-monitoring and dispersion-modeling system provides objective, quantifiable, visual representations of the probable offsite odor concentrations over time associated with WPWMA operations.

As part of the odor-monitoring system, the WPWMA has the ability to conduct predictive odor risk modeling and produce a daily odor risk forecast that facility operators and contractors can use to plan operations and minimize the potential for offsite odors. The WPWMA also operates an online odor

notification system that allows individuals who experience an odor to report it directly to the WPWMA. The odor notification system generates a file summarizing pertinent information that is emailed directly to WPWMA and PCAPCD personnel. Receipt of an odor notification by WPWMA staff results in a field investigation in the reported area for as many odor notifications as possible. Investigations are typically performed when odors are reported during office business hours and within 2 hours of being experienced.

Waste Recovery Operations Load Checking.

The load-checking program is designed to prevent the inadvertent acceptance and processing of hazardous and prohibited wastes delivered in the mixed-waste stream. The load-checking program consists of four elements:

Training – Training for personnel includes the effects of hazardous substances on human health and the environment, identification of prohibited materials, and emergency notification and response procedures.

Load Checking – The surveillance load-checking program is conducted to varying degrees by the scale house attendant, tipping floor spotters, tipping floor loader operators, and sorters on the picking lines. A spotter or a loader operator checks the loads discharged on the MRF and C&D receiving floor either during the unloading process or immediately thereafter. The primary responsibility of the sorters is to remove recyclable materials from the sort lines. However, they also have the opportunity to identify HHW or other prohibited materials in the waste stream and segregate them for appropriate recycling or disposal. In addition to these surveillance activities, facility operator staff conducts one random load inspection per week.

Waste Management – If a prohibited material (for example, explosives, medical waste, asbestos, certain gas cylinders) is observed at the scale house or on the MRF or C&D tipping floor, the scale house attendant or spotter will inform the customer that it is their responsibility to properly manage and dispose of the waste. If a prohibited waste is observed on the tipping floor after the customer has left the site and the generator (hauler) is known, the Waste Recovery facility operator staff will label the waste to identify it as belonging to the generator and will move it to the HHW facility for temporary storage. Waste Recovery facility staff will contact the generator and inform them they must remove the waste from the facility and properly manage and dispose of it or pay for the WPWMA to do so. If the generator refuses to take responsibility for the waste, then Placer County Environmental Health Services will be notified. If the generator is not known, the employee will move the waste to the HHW facility for ultimate offsite recycling or disposal. If the prohibited waste is observed on the sorting line, qualified personnel will collect the material and move it to the HHW facility for offsite reuse or disposal.

Record Keeping – Load-checking and waste-inspection forms are maintained onsite for 5 years. Employee training records are maintained at the facility for at least 4 years beyond termination of the employee's employment.

Waste Recovery Operations – Traffic

As indicated previously, SWFP No. 031-AA-0001 applies to all Waste Recovery operations. This permit allows for the receipt of materials 7 days per week and includes a vehicle permit limit of 1,014 vehicles per day.

In 2018, the peak weekday vehicle count associated with Waste Recovery operations occurred on Wednesday, May 30, 2018, and resulted in 918 vehicles. The peak weekend vehicle count occurred on Saturday, May 26, 2018, and resulted in 1,196 vehicles.

The average number of vehicles associated with Waste Recovery operations in 2018 was 694 vehicles per day. In 2018, the majority of the vehicle trips (75 percent) associated with Waste Recovery operations were made by cars and light-duty (pickup) trucks. Larger trucks represented 4 percent of the total vehicle trips, while 19 percent were associated with medium-sized dump or delivery trucks, and 2 percent of the vehicle trips were associated with larger dump trucks or semi-trailers.

1.6.3 Waste Disposal Operation

Waste Disposal operation at the WPWMA facility consists of the operation of the WRSL. In addition to describing the location, materials, and waste amounts, the following discussion also describes key components of the Waste Disposal operation, including landfill access, landfill module development phasing, landfill Waste Disposal operations, remediation and monitoring of existing groundwater contamination, environmental monitoring and control systems, nuisance control measures, traffic levels, and the landfill closure plan.

Location

The WRSL is located on the WPWMA's center property (Figure 1-3). The permitted disposal footprint covers approximately 231 acres of the 314-acre center property, while landfilling has occurred on approximately 158 acres of the property. The remaining 73 acres permitted for landfilling have not yet been developed as landfill modules.

Landfill Access

Public access to the WRSL is provided through the site entrance gate on Athens Avenue. Two additional access points to the WRSL are located along Fiddyment Road to the west, although the site roadways in this area are not paved, these gated access points are locked, and the access points are not intended for public or customer use. The WRSL perimeter is fenced with 4-strand barbed wire or hog wire on the western, southern, and eastern sides. The northern side (Athens Avenue) includes a 6-foot-high chain-link fence. After passing through one of the two scale house complexes, vehicles accessing the WRSL continue southbound along a haul road that extends through the center of the property to the west of Modules 1, 2, 10, 11, 12, 13, and 14.

Material – Source, Type, and Amount

The WRSL is operated as a Class II and Class III facility. Class III facilities are those that accept nonhazardous MSW. The definition of nonhazardous solid waste from 27 CCR Section 20220 is as follows:

> Nonhazardous solid waste includes all putrescible and nonputrescible solid, semi-solid, and liquid wastes, including garbage, trash, refuse, paper, rubbish, ashes, industrial wastes, demolition and construction wastes, abandoned vehicles and parts thereof, discarded home and industrial appliances (except e-wastes), manure, vegetable or animal solid and semi-solid wastes, and other discarded waste (whether of solid and semi-solid consistency); provided such wastes do not contain wastes which must be managed as hazardous wastes, or wastes which contain soluble pollutants in concentrations which exceed applicable water quality objectives or could cause degradation of wastes of the state (i.e., designated waste).

A Class II facility can accept all of the nonhazardous solid waste allowed for a Class III facility plus "designated" wastes, using the criteria set forth in CCR Title 27 and Waste Discharge Requirements R5-2007-0047. Waste accepted at a Class II facility includes any industrial solid waste that cannot be

described as hazardous. These waste types are described in further detail under the discussion of accepted waste types.

Waste Source.

Of the tonnage that was delivered to the WRSL for disposal in 2018, the majority comprised residual material from the MRF building, organics management operation, C&D materials processing operation, and public tipping area, and the remainder was direct haul to the WRSL.

Waste Types.

The following describes the waste types that are accepted and those that are not accepted at the WRSL:

Nonhazardous Solid Waste – Most wastes currently accepted at the WRSL can be classified as nonhazardous solid wastes, and include mixed municipal wastes, C&D debris, and residual materials resulting from Waste Recovery processing operations.

High Liquid Content Waste – Nonhazardous sludges are accepted at the WRSL. A majority of the sludges received and disposed of at the WRSL are generated by publicly owned treatment works in the Cities of Auburn, Lincoln, Roseville, and in Placer County.

Sludge accepted at the Class III modules that is shown to have at least 20 percent solids (primary sludge) or 15 percent solids (secondary sludge) is mixed with refuse at a minimum solids-to-liquids ratio of 5:1 by weight and is not permitted to exceed the initial moisture-holding capacity of the solid waste. These restrictions do not apply to the disposal of dewatered sludge in the Class II portion of the WRSL.

Dewatered (dried) sewage or water treatment sludge may be used as ADC consistent with CCR Title 27 §20690(a)(8) requirements. Dried water treatment sludge is currently used as ADC.

Designated Wastes – Designated wastes are accepted at the WRSL for disposal in the site's Class II modules. A Class II landfill can accept all nonhazardous solid waste for disposal, including designated wastes. Acceptable designated wastes include industrial sludges, dredge debris, treated wood waste, commercial and industrial waste, and glass cullet (that is, crushed glass ready for remelt).

Dead Animals – Dead animals are not accepted at the WRSL. However, small dead animals that are occasionally disposed in the residential waste remain commingled with the waste when being buried.

Treated Medical Waste – The WRSL accepts autoclaved medical waste. In accordance with the Medical Waste Management Act, autoclaved medical waste is deemed to be solid waste. When autoclaved medical waste is received, the operator digs a hole near the working face and buries the autoclaved medical waste in the hole.

Other Wastes Requiring Special Handling – Other nonhazardous wastes that may be accepted at the WRSL include the following:

- ***Treated Wood Waste*** – Treated wood waste is accepted at the WRSL and disposed in Class II modules only. Treated wood waste is wood treated with a chemical preservative, not including creosote, and that does not require a certification letter from the generator prior to disposal.
- ***Cannery Waste*** – Presently, cannery waste is not generated within Placer County, and out-of-county waste is not accepted at the WRSL. If, in the future, cannery waste is generated in Placer County, the

generator will be required to certify that the cannery waste has a solids content of 50 percent or greater before it could be accepted for disposal at the site.

- ***Tires*** – Tires are accepted at the Waste Recovery facilities but are separated from the waste stream for transport offsite for recycling. If a tire is found at the WRSL, it is removed and delivered to the Waste Recovery facilities.
- ***Soil*** – Soils and other inert materials that, using best professional judgment, are free of materials that could be released in concentrations exceeding applicable water quality objectives can be stockpiled at the WRSL for on or offsite beneficial reuse. The WRSL may also accept soils, inert materials, and other materials that may be suspected to contain nonhazardous levels of contaminants upon characterization of the materials through lab analysis; however, these materials would be disposed and not stockpiled for reuse. Hydrocarbon contaminated soil is not accepted at the WRSL. Inert materials received at the WRSL under SWFP No. 031-AA-0210 are processed at the inerts area of the C&D materials processing operation as part of Waste Recovery operations described in Section 1.6.2.

Waste Amounts.

As depicted on Figure 1-4, material associated with the existing SWFP for the WRSL includes direct haul to the WRSL; inert materials processed as part of Waste Recovery at the C&D materials processing area; and residue from the MRF building, organics management operation, C&D materials processing operation, and public waste drop-off tipping area that is disposed in the WRSL. Of the material disposed in the WRSL, approximately 28 percent is received directly at the WRSL, whereas approximately 62 percent is transported to the WRSL from the MRF building. The remaining 10 percent of waste disposed is transported to the WRSL from the organics management operation, C&D materials processing operation, and public waste tipping area.

The 2018 WRSL Waste Disposal metrics are shown in Table 1-5 and are based on WPWMA scale house records.

Table 1-5. 2018 Baseline Western Regional Sanitary Landfill Waste Disposal Metrics

Baseline Criterion	Tonnage Quantity
Permitted maximum daily disposal rate	1,900
Average weekday disposal rate	1,134
Total (annual) waste disposed	294,923

Source: WPWMA 2020

Based on its remaining capacity and projected Waste Disposal trends, the WRSL is estimated to reach its currently permitted landfill capacity in 2058 (Golder Associates, Inc. 2017), although reaching the permitted landfill boundary would require demolition of some of the existing Waste Recovery facilities. This site life projection is strongly affected by growth in the waste stream as well as the strength of recyclable markets, regulatory limitations on materials that can be legally landfilled, and soil usage trends. For example, if waste stream growth consistently exceeds the assumed growth rates, and global recycling markets continue to decline, more material will require disposal, thereby shortening the WRSL's site life.

Elevation

The WRSL's maximum permitted elevation is 295 feet above mean sea level (AMSL), which is approximately 175 feet above the surrounding ground surface. Pre-landfill development elevations ranged from

approximately 106 feet AMSL in the southwestern corner to approximately 134 AMSL in the center of the site. The current maximum elevation of the WRSL is approximately 196 feet AMSL. The maximum depth of WRSL excavation to accommodate the development of Waste Disposal modules is 57 feet AMSL.

Waste Disposal Operation – Traffic

As indicated previously, SWFP No. 031-AA-0210 applies to Waste Disposal operations. SWFP No. 031-AA-0210 allows for the receipt of materials 7 days per week and includes a vehicle permit limit of 624 vehicles per day.

In 2018, the peak weekday vehicle count associated with Waste Disposal operations occurred on Friday, August 31, 2018, and resulted in 135 vehicles. While permitted to operate 7 days per week, the WRSL typically operates 5 days per week, Monday through Friday, and on weekends as needed. In 2018, the WRSL operated 5 weekend days. The average number of vehicles associated with Waste Disposal operations in 2018 was 61 vehicles per weekday.

Landfill Module Development Phasing

The site was originally permitted for Waste Disposal activities in 1979. In 1992, the WRSL was divided into 16 modules for refuse fill placement, as shown on Figure 1-6. Modules 3 and 4 were located directly west of Modules 1 and 2 but were never used for landfilling and were removed from the WRSL site plan to accommodate the Waste Recovery facilities. The WRSL currently has 14 remaining modules that are numbered 1, 2, and 5 through 16. The site development to date has extended along the eastern half and southwestern corner of the WRSL. Modules are developed by excavating native, previously undisturbed soils out of an area of the permitted landfill and then installing a liner system prior to disposing waste material into the module.

The liner systems are designed so that waste materials, including liquids, remain within the modules and do not come into contact with the underlying soil. Subtitle D of the Resource Conservation and Recovery Act (Part 258 of the *Code of Federal Regulations*) regulates the design, operation, and monitoring of MSW landfills, including the design criteria for liner systems that are required to be installed in landfill modules. However, several modules within the existing WRSL were constructed prior to the adoption of Subtitle D. For Modules 1 and 2, which were the first two modules constructed on the site, the module bases consist solely of compacted native soils. For Modules 10 and 11, which were constructed following Modules 1 and 2, the module bases consist of compacted clay with only the southwestern end of Module 11 incorporating a geomembrane liner above the compacted clay.

During excavation of a module, the module floor is sloped to drain to a low point (sump) located along the perimeter of the landfill. In addition, Subtitle D-compliant modules include a leachate collection and removal system (LCRS) installed in the base of the modules on top of the liner system that is connected to, and integrated with, a membrane-lined sump (in such cases, the sump is an integral part of the LCRS). The LCRS collects liquids at the base of the modules that have been exposed to waste materials and provides a highly permeable pathway for leachate to flow to the module sump. A riser pipe is installed during liner construction, extending from the base of the sump to the top surface of the excavation (that is, native ground surface). A pump is installed in the riser pipe and allows for leachate collected by the LCRS to be removed and discharged to the sanitary sewer.

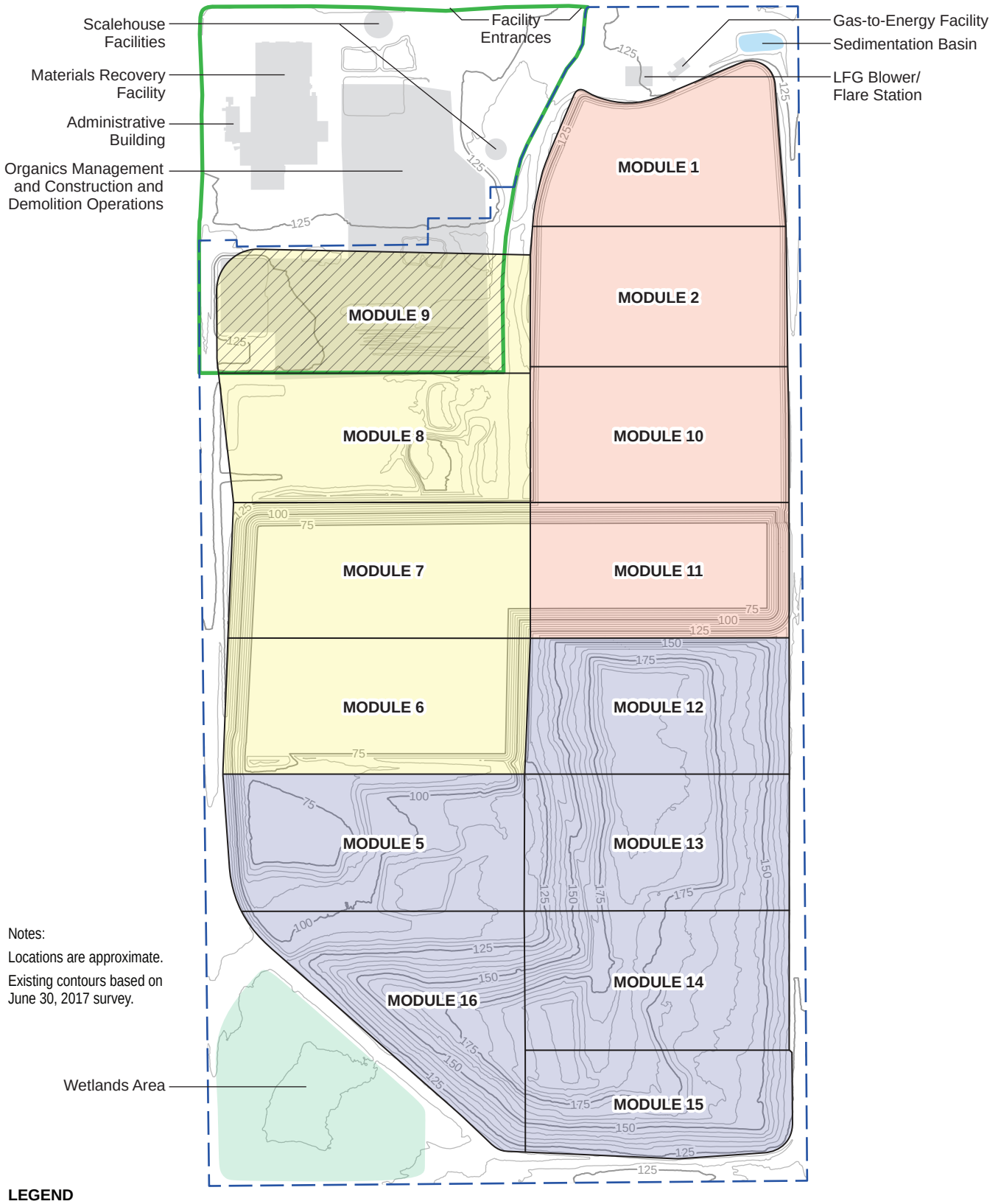

Figure 1-6. Existing WRSL Development Plan
Draft Environmental Impact Report
Renewable Placer: Waste Action Plan
Placer County, California

Jacobs

BI0213191718SAC 1-6v11

The following describes the existing liner systems within the WRSL's developed modules:

- Modules 1 and 2 were constructed as Waste Disposal units lined with compacted onsite soils and were closed in 1998 with a final cover system consisting of various soil components. Modules 1 and 2 share a leachate sump (located in Module 2) and a side slope riser pipe to access the sump (Golder Associates, Inc. 2018) that was damaged and replaced in 2019 with a vertical LCRS riser pipe.
- Modules 10 and 11 were constructed with a compacted clay liner. The southwestern end of Module 11 incorporated a geomembrane liner above the compacted clay liner. Modules 10 and 11 were closed with a final cover applied in the summer of 1999. Like Module 2, Module 10 has a leachate sump and a replacement vertical riser pipe to access the sump. The western half of Module 10 and all of Module 11 includes an LCRS with a leachate sump (Golder Associates, Inc. 2018).
- Module 12 was constructed with a Subtitle D composite liner consisting of 6 inches of compacted soil overlain by a geomembrane. Module 12 includes an LCRS.
- Module 13 incorporated a Subtitle D composite liner system consisting of 2 feet of compacted clay with a hydraulic conductivity of 1×10^{-7} centimeters per second (cm/sec) or less overlain by a 60-millimeter (mil)-thick high-density polyethylene (HDPE) geomembrane. Module 13 includes an LCRS.
- Module 14 was constructed with a Subtitle D single-composite base liner system consisting of a 1-foot-thick compacted clay layer with a hydraulic conductivity of 1×10^{-7} cm/sec or less overlain by a geosynthetic clay liner (GCL) that is overlain by a 60-mil-thick HDPE geomembrane. All of Module 14 includes an LCRS. Because Module 14 is a Class II unit, a separation liner consisting of a 60-mil-thick HDPE geomembrane was placed on the south-facing Module 13 slope to maintain a physical separation between Class II and Class III wastes and leachate.
- Module 15 was constructed with a Subtitle D double-composite base liner system consisting of a prepared subgrade, a secondary GCL with a hydraulic conductivity of 5×10^{-9} cm/sec or less, a secondary double-sided textured 60-mil HDPE geomembrane, a secondary geocomposite leachate collection layer, a primary GCL with a hydraulic conductivity of 5×10^{-9} cm/sec or less, a primary double-side textured 60-mil HDPE geomembrane, a 12-inch gravel layer with leachate collection pipes, a geotextile filter, and a 12-inch soil cover layer. The LCRS sump installed in Module 15 consists of a primary sump connected to the primary HDPE geomembrane, a leak detection sump connected to the secondary HDPE membrane and an underlying pan lysimeter.
- Module 16 was constructed with a Subtitle D double-composite base liner system consisting of a prepared subgrade, a GCL with a hydraulic conductivity of 5×10^{-9} cm/sec or less a secondary double-sided textured 60-mil HDPE geomembrane, a secondary geocomposite leachate collection layer, a primary GCL with a hydraulic conductivity of 5×10^{-9} cm/sec or less, a primary single-side textured 60-mil HDPE geomembrane, a 9-inch gravel layer with leachate collection pipes, a geotextile filter, and a 15-inch soil cover layer. Unlike the other modules that are sloped to drain to a single sump, Module 16 was graded to include a high point along the middle of the module with each side draining to a separate sump—one to the southeastern edge of the module, the other to the western edge of the module. The LCRS sumps installed in Module 16 consist of a primary sump connected to the primary HDPE geomembrane, a leak detection sump connected to the secondary HDPE membrane, and an underlying pan lysimeter.
- Module 5 was constructed by using the Water Board-approved Module 16[7] design criteria with the exception of using a smaller-diameter, more-rounded drainage layer and sump gravel and installing

[7] The Water Board-approved design criteria for Module 5 are the same criteria that were approved for Module 16 by the Water Board on January 18, 2007, as referenced in bullet 45 of the site's Waste Discharge Requirements Order No. R5-2007-0047 (page 187 of the JTD pdf). This consists of a double composite base liner system and a single composite side-slope system, as discussed in bullet 46 of the WDRs.

regularly spaced gravel sections of the operations layer soil to promote leachate drainage from the waste to the blanket LCRS, facilitating LCRS operation.

- Modules 6, 7, 8, and 9 have not yet been constructed.

Landfill Waste Disposal Operations

Load-Checking Program.

The Waste Disposal load-checking program is conducted to varying degrees by the scale house attendant, spotters, and landfill equipment operators. Either a spotter or equipment operator checks the loads discharged at the WRSL during the unloading process or immediately thereafter. In addition to these surveillance activities, landfill operator staff conduct a minimum of two random load inspection per week.

Waste Disposal and Daily Cover Placement.

When Waste Disposal vehicles arrive at the WRSL's working face, they are directed according to the vehicle type. The WRSL's working face is the area where waste delivered to the site for disposal is unloaded and compacted. Public vehicles are directed to unload near the active working face, away from unloading transfer trucks. Traffic cones and a spotter are used to direct traffic to the unloading area.

After vehicles empty their loads, the refuse is spread and compacted in 2-foot-thick layers on a 4:1 (horizontal to vertical) to 3:1 (maximum) sloped working face, consistent with optimum slope angles for landfill compaction equipment operation. The working face is typically 70 to 100 feet wide. The refuse fill is placed in 10-foot lifts. During wet weather, wastes are unloaded on the wet-weather tipping pad near the working face, which is typically constructed of broken concrete and other bulky inert materials that are largely later removed and reused for the next wet-weather tipping pad.

Once material is placed at the working face, the compaction equipment makes several passes over each 2-foot layer so that all wastes are compacted. Large or bulky wastes are separated to prevent bridging of the surrounding refuse and are thoroughly crushed by compacting equipment. Concrete and other large, inert debris are directed to a separate area of the site where they are stored and periodically processed for subsequent reuse. This inert material may be used for building wet-weather access roads and tipping pads.

Temporary berms are constructed around the working face to divert surface water runoff around the active working face to minimize contact water. The working face is aligned as necessary to avoid trapping runoff. Rainfall that does contact the waste is collected and trucked or pumped to the sanitary sewer.

Each module is filled according to the module-specific design before advancing to the next module as depicted in a master fill plan, the most current version of which was prepared by SCS in 2003. Drainage facilities, roads, and other site improvements are constructed and extended as the fill progresses.

Cover material is placed over the refuse at the end of each day. The top deck and side slopes of the daily fill area are covered with a minimum of 6 inches of compacted soil or an approved ADC material such as tarps, dried bio-solids from water (not wastewater) treatment plants, or MRF fines from MSW or C&D processing operations.

Processed MRF or C&D fines, mechanically screened to a 1/2-inch minus size, are used as ADC. Fines are placed in a minimum 6-inch-thick lift on the side slopes of the daily fill area that will receive waste the following day. MRF fines are not exposed for more than 24 hours after placement as cover (i.e., any areas of the landfill that will not be filled within 24 hours will be covered with soil). The landfill operator may reject any load of MRF fines because of excessive amounts of food waste or odors. Rejected loads are

buried with the day's waste. The WPWMA uses up to 283 tons of MRF or C&D fines as ADC per day and up to 1,588 tons per week. When the landfill receives materials for use as ADC, it is placed that day (as needed); otherwise it is disposed.

At the end of each operating day, or more frequently on high-wind days, the landfill contract operator's foreman brings laborers in from other duties (as appropriate) to patrol the working area for litter. Litter is removed from the daily cover stockpile, areas between the working face and the litter fences, and vehicle unloading area.

Areas around the vehicle unloading area and any push trails to the working face also are covered with daily cover, and any litter in those areas is picked up regularly. One of the landfill workers is responsible for remaining onsite until the fill area is properly covered for the evening.

Intermediate Cover Placement.

Intermediate cover is applied to areas of the WRSL where filling is not anticipated within 180 days. Intermediate cover consists of 12 inches of compacted soil or an approved engineered alternative.

Soil materials for cover construction come from onsite excavation of landfill expansion modules. The base excavation for all the modules is estimated to produce sufficient soil for daily, intermediate, and final covers.

Existing Groundwater Contamination

Because the four initial modules were constructed prior to establishment of the Subtitle D-compliant liner system requirements, they have greater potential to release leachate and landfill gas (LFG) into the underlying soil and groundwater than the Subtitle D-compliant liners. The contamination of groundwater can be detected by monitoring the quality of the groundwater within wells installed around the perimeter of the WRSL. In 1995, the degradation of site groundwater quality was first observed in monitoring well MW-9, which is located immediately west of Module 2 (the location of groundwater quality monitoring wells is shown on Figure 1-7). Modules 1 and 2 were subsequently closed and received final cover in 1998. Groundwater within well MW-9 was determined to contain several volatile organic compounds (VOCs). A comparison of VOCs detected in LFG samples from LFG probe GM-14 at the site with the VOCs detected in the groundwater in well MW-9 indicated that LFG may be responsible for the VOCs detected in the well MW-9 groundwater (Lawrence & Associates 1995). In addition, analyses of general water quality parameters in well MW-9 indicated that there may be a leachate influence on the quality of groundwater. Lawrence & Associates (1995) showed that the effects of leachate on groundwater were limited to a small area around well MW-9. A Corrective Action Program (CAP) and Addendum were submitted to the Regional Water Quality Control Board (RWQCB) on May 20, 1997, and September 23, 1997, respectively. The RWQCB approved the CAP and its addendum in late 1997, which required the installation of final cover to limit leachate production and an LFG management system on closed modules. To monitor the effectiveness of these CAP measures, corrective action wells are sampled on a quarterly basis. Data from the CAP wells are evaluated for inorganic and organic constituent trends quarterly. (Golder Associates, Inc. 2018).

Fluctuations in concentrations of VOCs, calcium, magnesium, and bicarbonate alkalinity, all of which can be affected by LFG, have been observed in the samples from the CAP wells. The changes in concentrations of these parameters suggest that the influence of LFG on groundwater quality has varied over time (Golder Associates, Inc. 2018). Quarterly water quality monitoring results suggest that, based on the estimated groundwater velocity of 10.1 feet per year (SCS 2020) and general flow direction from northeast to southwest, it could take 150 years or more before the contaminated groundwater reaches the WPWMA's southern property line from where it appears to have originated.

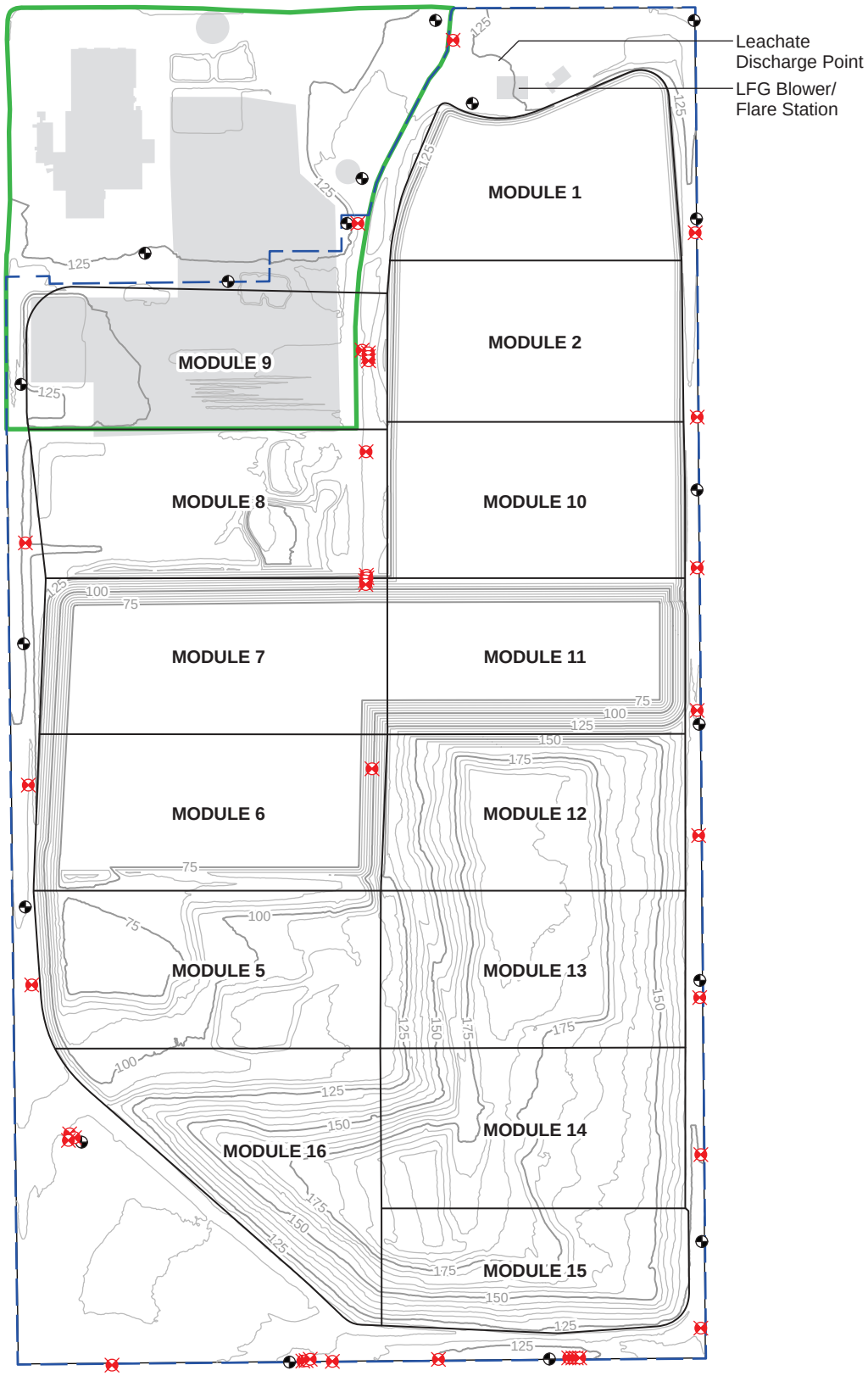

Notes:

Locations are approximate.

Existing contours based on June 30, 2017 survey.

LEGEND

- Perimeter LFG Monitoring Well
- Perimeter Groundwater Monitoring Well
- Facility
- 75 — Existing Contour (5-ft Interval)
- Landfill Module Boundary
- Landfill Permit Boundary
- MRF Permit Boundary

North

0 500 1,000

Approximate scale in feet

Figure 1-7. Existing WRSL Environmental Monitoring System

Draft Environmental Impact Report
Renewable Placer: Waste Action Plan
Placer County, California

Jacobs

BI0213191718SAC 1-7v6

Landfill Environmental Monitoring and Control Systems

The WRSL incorporates various environmental monitoring and control systems designed to eliminate, minimize or identify potential environmental impacts and nuisances. These systems are intended to promote safe operations at the WRSL and the protection of public health and the environment. The following environmental monitoring and control systems are integrated into the current landfill operations and will continue to be part of the operations as long as dictated by applicable state and federal regulations:

- Double-Composite Landfill Liner System
- Leachate Management System
- Surface Water Management System
- LFG Management System
- LFG perimeter probe monitoring network
- Groundwater monitoring well network

Double-Composite Landfill Liner System.

The descriptions of the landfill liner systems for the existing modules are presented in Landfill Module Development Phasing, Section 1.6.3.6. As described in this section, Modules 5, 15, and 16 were constructed with a double-composite liner system, and all future Class II modules will be constructed with similar liner systems unless there is a change in the applicable state and federal regulations, such as if a superior technology or practice is identified. The double-composite liner system is described as follows:

Landfill Base Liner System – The containment system for base areas of the WRSL is composed of the following base liner components, from bottom to top, which are represented on Figure 1-8:

Base Liner System:

- Prepared subgrade soils
- Secondary GCL with maximum hydraulic conductivity of 5×10^{-9} cm/sec
- Secondary 60-mil-thick, double-sided, textured HDPE geomembrane
- Geonet or Geotextile Filter Fabric leak detection layer
- Primary GCL with hydraulic conductivity of 5×10^{-9} cm/sec or less
- Primary 60-mil-thick, single-sided, textured HDPE geomembrane

2-foot Operations Layer:

- 9-inch-thick LCRS gravel layer
- Geotextile filter fabric
- 15-inch thick operations layer

Landfill Side Slope Liner – The containment system for subgrade side slope areas of the WRSL is composed of the following side slope liner components, from bottom to top:

Side Slope Liner System:

- Prepared subgrade soils
- Primary GCL with maximum hydraulic conductivity of 5×10^{-9} cm/sec
- Primary 60-mil-thick, single-sided textured HDPE geomembrane
- 2-foot Operations Layer:
- 24-inch-thick soil layer with leachate collection pipes

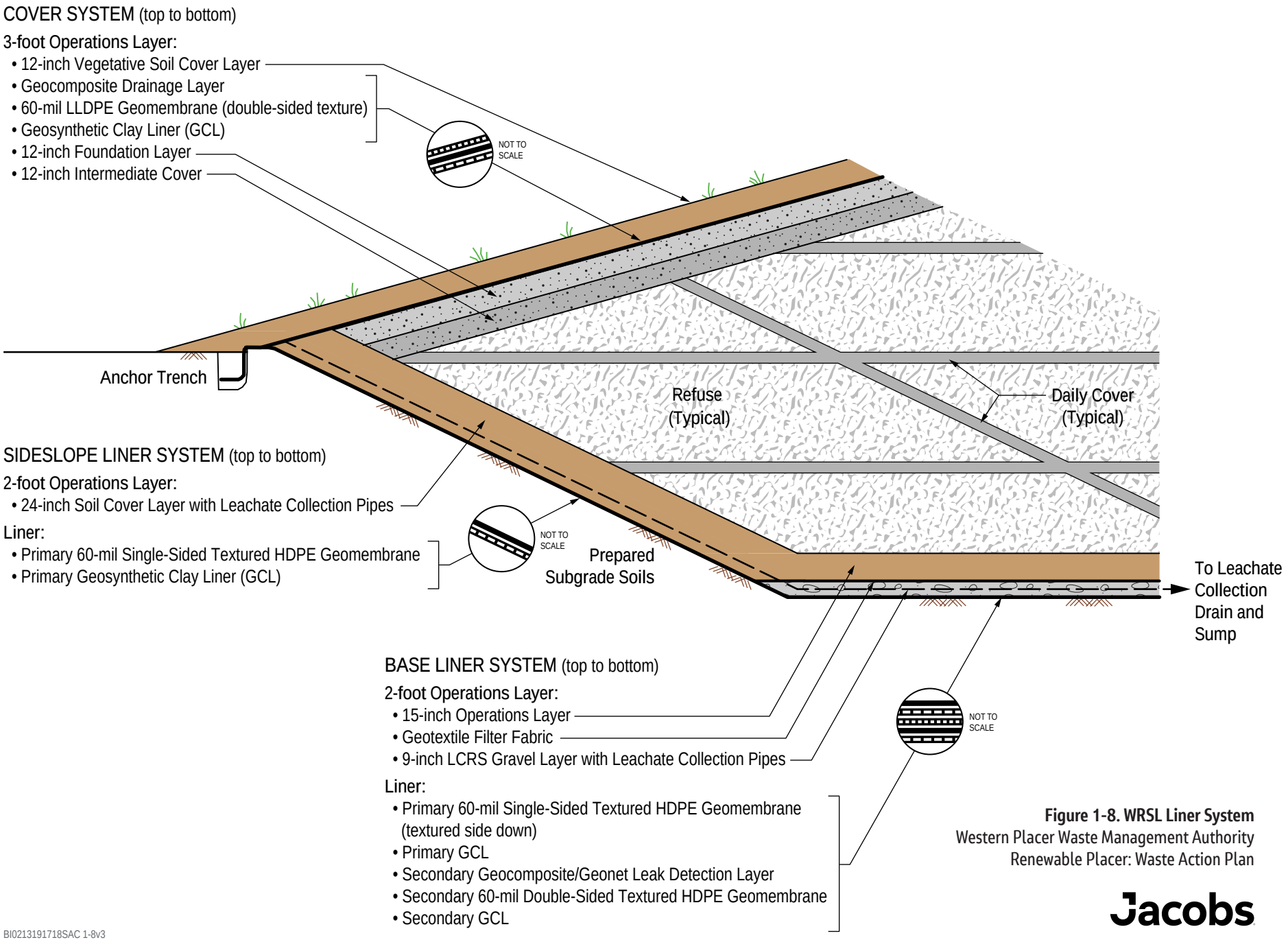

Figure 1-8. WRSL Liner System
Western Placer Waste Management Authority
Renewable Placer: Waste Action Plan

Jacobs

Landfill Cover System – The cover system for the WRSL is composed of the following components, from bottom to top:

- 12-inch intermediate cover
- 12-inch foundation layer
- GCL
- 60-mil, single-sided, textured HDPE geomembrane (textured side down)
- Geocomposite drainage layer
- 12-inch vegetative soil cover layer

Leachate Management System.

The LCRS is designed to provide efficient collection and removal of landfill leachate and meet the requirements of CCR Title 27 and Subtitle D. The LCRS design at the WRSL has evolved over time and differs between the different modules. However, the overall system generally consists of the installation of a gravel layer of the base liner system that allows landfill leachate to flow to a low area, or sump. Riser pipes extend down to the sump, and leachate can be pumped through these riser pipes to remove the leachate from the sump and convey it to the sanitary sewer for disposal. All of the modules that include a plastic liner system also include perforated pipes to more quickly convey collected leachate to the sump for extraction.

Contact water at the active face is minimized by reducing surface water run-on with diversion berms around the active face. Any observed ponding of contact water around the active face is trucked or pumped to the sanitary sewer. The public is kept away from contact water at the active face by berms and other types of barricades. Contact water and leachate are disposed to the sanitary sewer.

Surface Water Management System.

The WRSL's surface water management system consists of drainage ditches, berms, culverts and down-drains. These controls are sized to accommodate a 1,000-year, 24-hour storm event as required by Title 27 CCR §20365. A perimeter channel conveys water around the developed landfill. One detention area is located in the northeastern corner of the site, and the other is located in the wetland area in the site's southwestern corner. A third detention basin is located in the MRF area, also includes some MRF drainage, and discharges to the north under Athens Avenue.

The control of stormwater at the WRSL is focused on minimizing contact of water with waste. Stormwater is diverted away from exposed refuse and into the perimeter drainage channels that eventually drain to natural waterways.

Landfill Gas Management System.

The WRSL's active LFG management system consists of vertical and horizontal extraction wells, perimeter migration control extraction wells, pneumatic condensate sump pumps, and a flare station. The location of perimeter LFG monitoring wells is shown on Figure 1-7. The WRSL flare station includes a dual-zoned flare (two flares nested in one flare shell) capable of processing between 100 and 3,000 standard cubic feet per minute (scfm) of LFG and is operated on a continuous basis as the primary emissions control device. The WRSL flare station is sized to be capable of combusting all generated LFG in the event the landfill gas-to-energy facility were unable to operate or to consistently combust the residual LFG if the energy facility is operating.

A landfill gas-to-energy facility owned and operated by Energy 2001 Inc. under a lease agreement with WPWMA is located on the northern side of the site. This facility generates electricity by running LFG through internal combustion engines. The Energy 2001 facility currently diverts up to approximately 1,800 scfm of LFG from the flare station and includes a small flare capable of handling up to 450 scfm of LFG that has rarely been used since December 2017 when the WPWMA installed its dual-zoned flare.

The LFG management system will expand as the landfill expands, including the addition of extraction wells and support structures and facilities.

Landfill Nuisance Control Measures

Control measures related to fire prevention, vectors and birds, litter, odor, dust, and noise, have been established at the WRSL, consistent with CCR Title 27 regulations, to eliminate or minimize nuisances associated with landfill operations. Each are described in the following sections.

Fire Prevention and Control.

Fire protection of landfill equipment and vehicles is provided by portable fire extinguishers located in the equipment and vehicles. The office, maintenance facility, and landfill equipment are equipped with suitable fire extinguishers for extinguishing minor fires and for personnel safety. In addition, fire hydrants are located near the main site entrance along Athens Avenue.

A number of measures are taken to prevent fires and prepare to fight fires that occur. Preventative measures include the following:

- Training onsite personnel to respond properly
- Maintaining as small an active face as possible
- Keeping the water truck full when not in service
- Keeping a soil stockpile near the active face
- Repairing any erosion damage or cracks that develop in intermediate cover layers
- Installing an infill LFG management system
- Maintaining the infill LFG management system to prevent over pulling the field
- Enforcing the No Smoking condition on the WRSL
- Contributing approximately $250,000 annually to Placer County Fire

Examination for burning refuse or “hot loads” is conducted by the scale house staff as the load passes through the scales or public area gatehouse, and then by the spotter and equipment operators at the tipping area and working face. Screening of most wastes is conducted at the Waste Recovery areas of the site, which reduces the potential for hot loads to be delivered to the WRSL.

If smoke is observed before a load is dumped, the hauler or generator is directed to remove the load from the WRSL without dumping it or directed to a safe area of the WRSL to be properly extinguished by the WRSL operator or trained fire fighters. If the load has been placed at the working face, the landfill operator’s personnel assesses the situation and informs management. At this point, the load is either segregated from the other wastes, or emergency personnel are summoned, and the area evaluated. If the hot load is manageable, a dozer is used to remove the material and spread it over soil on an area where no refuse is present; this is only done if the water truck is present. Once the load is spread out, it is watered to extinguish the burning refuse. Once the material is completely cooled, it is disposed away from other refuse and completely encapsulated in soil.

Vector and Bird Control.

Refuse compaction and the application of daily cover are the most effective preventions against the propagation of vectors (e.g., insects, rodents) and birds on a landfill site. Although rodents have not been a problem at the WRSL in the past, site personnel inspect landfill areas routinely for any signs of rodent activity and implement the necessary measures to minimize vector nuisances. Professional pest control services are used as necessary. A bird control program that uses a variety of noise-making and bird-deterrent activities is implemented as needed. In addition, standing water is drained to minimize leachate production and secondarily prevent mosquito-breeding areas from remaining.

Litter Control.

Litter control measures are based on the wind conditions for the day and season. Normally, portable litter control fences are placed in the immediate vicinity of the working face to contain litter. When necessary, a work crew polices the litter fences near the working face, the site itself, access roads, and adjacent properties.

Odor Control.

There are two potential sources of odor from landfill operations: aerobic (with air) decomposition of incoming organic components of the disposed waste, and gases produced by anaerobic (without air) bacterial digestion of buried waste.

Odors associated with aerobic decomposition of waste are controlled by prompt placement of daily and intermediate cover. Sewage sludge is generally odiferous. The odor from this type of waste is reduced by quickly mixing the sludge with other waste and covering it immediately upon receipt. When the WRSL is not in operation (that is, not actively receiving waste materials for burial), all in-place wastes are covered by soil or an approved ADC. This cover serves to reduce the potential for windblown litter, vectors and odors. At the start of daily filling operations, the landfill operator establishes one or more daily active working faces where wastes will be disposed. The daily active working face is the only area(s) at the WRSL where wastes are exposed. On an average day, the size of the active working face is generally limited to less than 1 acre to minimize issues associated with the exposed waste, including the potential for odors. At the conclusion of each operating day, the WRSL operator places a layer of daily cover materials (soil or ADC) over the active working face to completely cover all wastes. BMPs implemented at the WRSL to minimize the potential for offsite odors from aerobic decomposition of waste are identified as follows:

- Discuss at the weekly landfill operations meeting, the planned location of each day's filling operations and when areas of previously buried waste that have been in place for a week or longer will need to be exposed for the purposes of establishing the daily active working face.
- Minimize the size of the working face to that necessary to maintain operator and customer safety. A working face between 1/4 and 1/2 acre is considered the minimum safe size for the tonnages disposed at the site.
- Minimize the open-air exposure time of wastes by placing newer wastes over older wastes throughout the operating day.
- Bury sludges and other highly odiferous loads immediately upon receipt by covering the materials as quickly as possible with less odiferous wastes.
- Use soil or "fines" recovered from the MRF building or C&D materials processing operation as an ADC as follows:
  - A 6-inch minimum layer of compacted, onsite, native soil, or

  - A 6-inch layer of MRF fines covered by a 6-inch layer of onsite, native soil, or
  - A 6-inch layer of MRF fines covered by a 6-inch layer of C&D fines.
  - Restrict use of ADC fines to areas that will receive additional fill within 24 hours. Exposure of ADC fines in excess of 24 hours is prohibited.
  - Daily cover will be compacted to minimize odor transmission. The minimum level of compaction may be achieved via track-walking the materials with a Caterpillar D-6 low ground pressure dozer or equivalent.
- Daily cover soil may be removed at the start of the operational filling day to minimize overall soil disposal rates. MRF fines and dried water (not wastewater) sludge used as ADC will not be removed and will remain in place once applied by the WRSL operator.
- Place and compact a minimum of 12 inches of intermediate soil cover over areas where landfilling operations will not occur for 180 days or more, consistent with the regulatory requirements identified in Title 27, section 20700 of the CCR. The depth of any previously placed soil daily cover will apply toward the intermediate soil depth requirement. The minimum level of compaction may be achieved via track-walking the intermediate cover soils materials with a Caterpillar D-8 dozer or equivalent.

Anaerobic bacterial digestion of buried waste produces LFG. Only the organic fraction of the landfilled waste will decompose and produce LFG. LFG is composed predominately of equal parts methane and carbon dioxide, both odorless gases. LFG also includes trace amounts of VOCs, sulfur-based compounds, and ammonia. It is generally the sulfur-based compounds and ammonia that result in LFG-related odors.

Federal and state law require that landfills with the potential to produce a certain amount of LFG install an LFG management system. WPWMA's current LFG management system includes a series of collection wells that remove the LFG from the waste mass (via an applied vacuum) and convey the LFG in an enclosed piping system to a central location (blower or flare station) where the LFG is either directed to the onsite energy developer to produce electricity or to an enclosed ground flare where it is destroyed through high-temperature combustion. BMPs implemented at the WRSL in order to minimize the potential for offsite odors from LFG are identified as follows:

- Comply with the provisions of 40 CFR Part 60 Subpart WWW and Title 17, CCR Section 95460, et seq.
- Maximize the recovery of LFG from the WRSL while minimizing the potential for subsurface combustion events and oxygen levels in excess of 1 percent by volume in the extracted LFG stream.

Dust Control.

The landfill operator is required to alleviate and prevent dust nuisance. Methods used to prevent dust at the WRSL include treating exposed soil piles to avoid dust generation, watering roadways at least twice per day, and suspending nonessential operations when sustained wind speeds exceed 25 miles per hour. In addition, dust may be controlled by placing daily and intermediate soil cover over the refuse fill in a timely manner, applying water or planting temporary vegetative cover on intermediate soil cover when conditions might cause recurrent problems with fugitive dust and erosion, as well as planting and maintaining vegetative cover on completed fill slopes and the interim cover to be placed on modules when they meet final grades.

Noise Control.

Noise emissions from onsite equipment are controlled by proper maintenance of mufflers. Adequate hearing protection devices are provided to personnel operating or working around equipment. In addition, the WRSL's distance from surrounding sensitive land uses minimizes noise impacts.

Landfill Closure Plan

When the WRSL reaches its peak capacity and can no longer accept waste for disposal, the WRSL closure plan will be implemented (Figure 1-9). The closure plan includes installation of a final landfill cover, establishment of final grades and slope protection measures, and implementation of closure and postclosure management operations. The primary functions of the final cover are as follows:

- Isolate the waste from the environment
- Control odors, vectors, and litter
- Control surface water infiltration in the landfill
- Control erosion and convey runoff to the surface water management system
- Control LFG

Throughout the closure and postclosure maintenance periods, the WRSL's environmental monitoring and control systems will continue to operate in a manner consistent with the site's Waste Discharge Requirements and applicable sections of CCR Title 27. The leachate management system will be operated, inspected, and maintained as long as there appears to be a potential for liquids to collect in the system's sumps.

At closure, a majority of the LFG management system will be in place and operational. As part of closure activities, installation of remaining portions of the LFG management system (for example, extraction wells) will be completed, and final components of the LFG management system will be installed. Operational activities will include LFG extraction, transmission, combustion, and conversion to energy as long as significant volumes of LFG are generated as well as operation of the leachate and condensate collection systems and any related reporting.

The groundwater and surface water quality monitoring programs will continue to be implemented throughout the closure and postclosure maintenance periods. Maintenance activities will include drainage channel repairs, pumping of sedimentation basins, removal of silt and debris along drainage channels and in sedimentation basins, repair and replacement of erosion and sediment controls (for example, silt fences, hay bales, riprap), and regrading of the final cover erosion control layer. Groundwater sampling, analysis and reporting would continue to confirm that subterranean pollution control systems are working as expected.

1.7 Public Review Process

1.7.1 Notice of Preparation and Public Scoping Meeting

The first step of the EIR preparation was the distribution of the NOP. The NOP was distributed to inform agencies and the public that an EIR was being prepared for the project and to solicit information on the scope of issues to be evaluated in the EIR. On March 15, 2019, the NOP was submitted to the California State Clearinghouse and distributed to interested and affected federal, state, and local agencies; interested parties; and organizations. It was also made available for public review at the WPWMA's office and was posted on the Renewable Placer: Waste Action Plan website (www.RenewablePlacer.com).

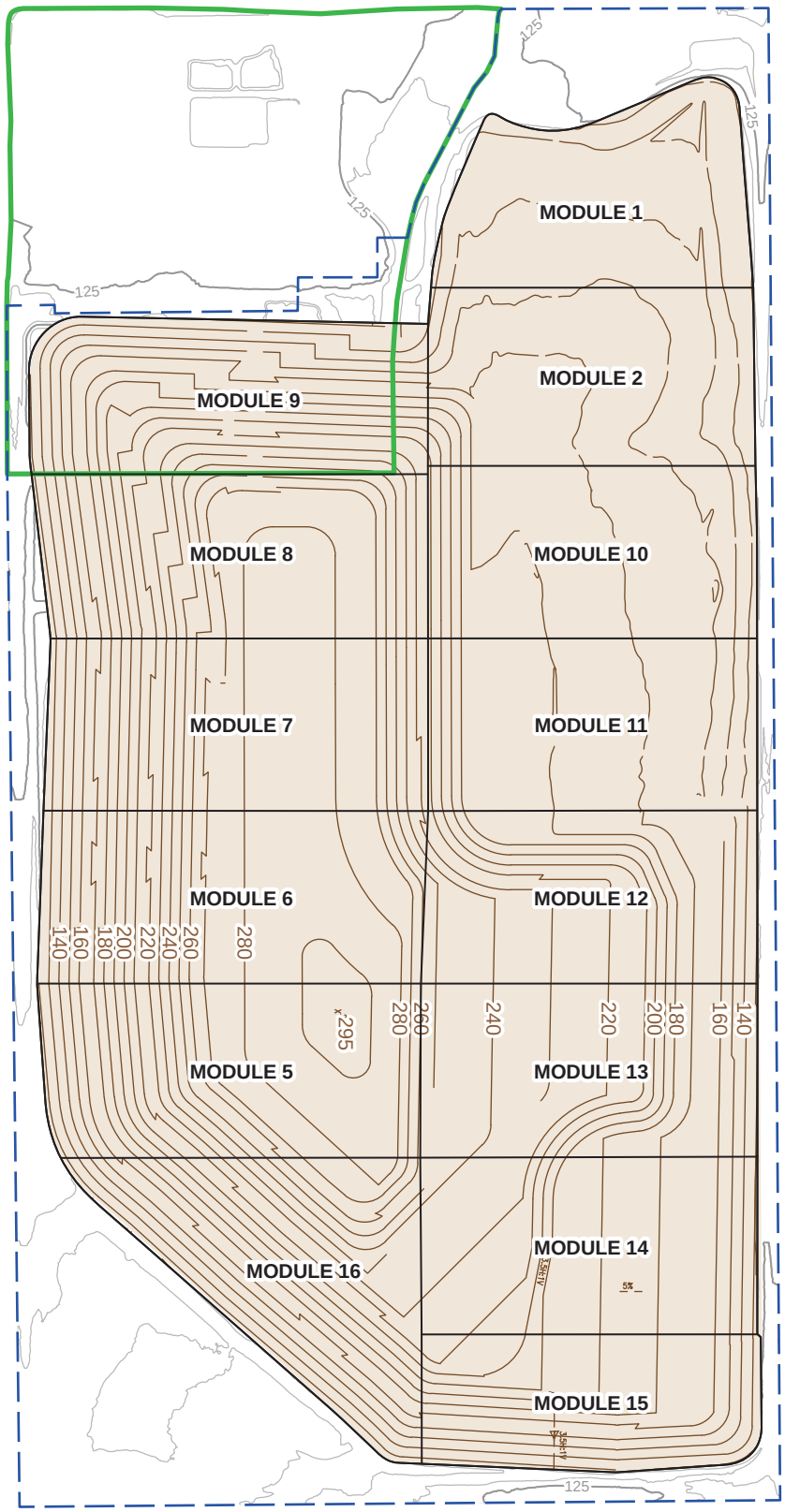

Notes:

Locations are approximate.

Existing contours based on June 30, 2017 survey.

LEGEND

- Landfill Area
- 75 Current Grading Plan Contour (10-ft Interval)
- 75 Existing Contour (5-ft Interval)
- Landfill Module Boundary
- Landfill Permit Boundary
- MRF Permit Boundary

North

0 500 1,000

Approximate scale in feet

Figure 1-9. Existing WRSL Permitted Final Grading Plan
Draft Environmental Impact Report
Renewable Placer: Waste Action Plan
Placer County, California

Jacobs

BI0213191718SAC 1-7v4

The NOP included a summary of the proposed project and an invitation to submit comments on the content of the Draft EIR. The NOP and associated response letters are included in Appendix A of this Draft EIR. The following agencies and parties responded to the NOP:

- Placer County Flood Control and Water Conservation District
- Placer County Health and Human Services Environmental Health Division
- Placer County Executive Office
- Native American Heritage Commission
- Central Valley RWQCB
- United Auburn Indian Community
- California Department of Transportation (Caltrans)

In addition, a scoping meeting was held to present the proposed project and to solicit input from the public and responsible agencies on the content of the Draft EIR. The scoping meeting was held at the WPWMA's administrative offices, located at 3013 Fiddyment Road, Roseville, CA 95747, on April 1, 2019. A memorandum documenting how comments received on the NOP were addressed in this Draft EIR is found in Appendix A.

1.7.2 Circulation of the Draft EIR

This Draft EIR has been submitted to the State Clearinghouse for distribution to state agencies and is being made available for 45 days to allow public review and comment. An electronic version of this Draft EIR is available on the Renewable Placer: Waste Action Plan website (www.renewableplacer.com). Printed copies of this Draft EIR are available for review at the WPWMA's administrative offices at the address below. Comments will be accepted on the Draft EIR either in writing before the end of the review period or orally at the public hearing on the Draft EIR held before the WPWMA Board of Directors. The date, time, and location of the public hearing are provided in the notice of availability accompanying this Draft EIR. Written comments on the Draft EIR should be mailed or emailed to:

Western Placer Waste Management Authority
3013 Fiddyment Road
Roseville, CA 95747
Attn: Stephanie Ulmer
e-mail: EIRcomments@RenewablePlacer.com

Following the close of the comment period, responses will be prepared for all substantive comments on the Draft EIR. A Final EIR will be prepared, which will include comment responses and any necessary changes to the Draft EIR. The Final EIR will be considered for certification by the WPWMA Board. If certified, the Board may consider taking action on the Waste Action Plan.

1.8 Permits and Approvals

1.8.1 Regulatory Compliance

Solid waste facilities in California are regulated on multiple jurisdictional levels by local, state, and federal agencies. Compliance with the regulations of each of these agencies is necessary for the ongoing solid waste operations at the site. Local regulatory enforcement is performed by the Placer County Department of Health and Human Services Division of Environmental Health Services (LEA) and the PCAPCD. At the state level, regulatory agency oversight is provided by the Department of Resources Recycling and Recovery (CalRecycle) and the Central Valley RWQCB. Each of these local agencies is involved in issuing permits that condition the operation of WPWMA's facilities.

The California Integrated Waste Management Act (IWMA) of 1989 (Assembly Bill 939) requires counties to prepare a Countywide Integrated Waste Management Plan (CIWMP) and mandates a minimum 50 percent volume reduction in solid waste being landfilled by 2000. Compliance with the IWMA is the responsibility of local jurisdictions. Later legislation mandates the 50 percent diversion requirement be achieved every year (CalRecycle 2012).

Even with achievement of a 50 percent reduction in landfilled waste, the California legislature recognized that additional landfill capacity is required. Thus, the IWMA also requires counties to secure long-term (15 years) disposal capacity for waste that cannot be diverted. To conserve critical landfill space, it is CalRecycle policy to maximize the use of existing landfills, where feasible and environmentally acceptable.

The IWMA also requires development of countywide siting elements and solid waste facility components as part of the CIWMP to assure that locations exist for environmentally safe transformation and disposal facilities for waste that cannot feasibly be reduced, recycled, or composted. Availability of Waste Disposal capacity, however, does not relieve local jurisdictions from their responsibility for source reduction required by the IWMA.

1.8.2 Federal, State, and Local Permits and Approvals

Table 1-6 identifies permits and approvals that may be applicable to the proposed project. Many of these permits apply to the existing WPWMA facility and may need to be amended for implementation of the proposed project. Although a number of agencies are identified, discussions with those agencies will be required to determine the specific nature of any future permits or approvals that may be required from those agencies. Their inclusion in this document is intended to acknowledge the possible role of those agencies and confirm their notification. In addition, reference to these agencies is intended to provide them and the public with an environmental basis under CEQA guidelines to facilitate the dissemination of information deemed necessary to the discretionary approvals process and the approval or conditional approval of any aspect of the proposed project within their jurisdiction.

1.8.3 Local Approvals

Local agency permits and approvals that may be applicable to the proposed project include the following:

WPWMA

- Certification of the Final EIR, approval of the Waste Action Plan, and selection of a Plan Concept for implementation

Placer County

- SWFP (issued by the LEA with concurrence from CalRecycle)
- Authority to Construct and Permit to Operate issued by the PCAPCD

Placer County Department of Public Works

- Grading, Drainage, and Building Permits
- Offsite Encroachment Permits

Table 1-6. Existing WPWMA Facility Permits and Approvals

Agency	Permit or Approval
Federal	
United States Army Corps of Engineers	Clean Water Act, Section 404, #199400476, issued July 27, 1994
State	
CalRecycle (California Department of Resources Recycling and Recovery)	Landfill SWFP No. 031-AA-0210, Concurrence with LEA permit issuance
CalRecycle (California Department of Resources Recycling and Recovery)	MRF SWFP No. 031-AA-0001, Concurrence with LEA permit issuance
California Department of Toxic Substances Control	Part A and Part B Applications for a Permanent HHW Facility Permit, issued March 21, 1995
California Department of Toxic Substances Control	Permit by Rule Notification for a Permanent HHW Collection Facility, issued July 26, 2007
State Water Resources Control Board	Stormwater Discharge Permit Stormwater Pollution Prevention Plan (SWPPP) Stormwater Monitoring Program (SWMP)
California Department of Fish and Wildlife	Permit #II-392-94, issued July 26, 1994
Central Valley Regional Water Quality Control Board	Waste Discharge Requirements Order No. R5-2007-0047; and Monitoring and Reporting Program No. R5-2007-0047, and 93-200 (blanket Waste Discharge Requirement issued to all Chapter 15 dischargers, August 1997) General Permit to Discharge Stormwater Associated with Industrial Activity National Pollutant Discharge Elimination System (NPDES) #5A315011144, issued September 1, 1994 General Waste Discharge Requirements for Composting Operations (Order WQ 2015-0121-DWQ), issued March 16, 2017
Local	
Placer County Division of Environmental Health Services (LEA)	Landfill SWFP No. 031-AA-0210, issued December 11, 2012
Placer County Division of Environmental Health Services (LEA)	MRF SWFP No. 031-AA-0001, issued December 12, 2011
Placer County Planning Department	Conditional Use Permit No. 225, issued August 2001
City of Roseville	Wastewater Discharge Permit Number 887795, issued January 1, 2000. Allows discharge of leachate into Roseville's sewer system
PCAPCD	Permit to Operate No. PLWR-01-01, issued February 13, 2007 Permit to Operate No. PLWR-05-01, issued December 14, 2001 Authority to Construct No AC-WPMR-21A (windrows), AC-WPMR-21B (ASP) and AC-WPMR-21C (compost feedstock), issued May 28, 2021

1.9 Content and Organization of Draft EIR

The Draft EIR has been organized into the following Chapters:

- **Chapter 1.0, Introduction**. This chapter describes the proposed project location, purpose, and intended uses of this Draft EIR; project objectives; existing baseline conditions; existing solid waste management operations; public review process; permits and approvals; and general content and organization of the Draft EIR.
- **Chapter 2, Executive Summary**. The Executive Summary summarizes the proposed project, the significant and unavoidable environmental impacts, project alternatives, areas of controversy, issues to be resolved, the WPWMA project approval process, and environmental impacts and mitigation measures.
- **Chapter 3, Project Description**. This chapter describes the proposed project location and existing surrounding land uses and provides a detailed description of the two plan concepts that are evaluated at an equal level of detail in this Draft EIR.
- **Chapter 4, Approach**. This chapter describes the approach to the environmental analysis, including the evaluation of two plan concepts to implement the Waste Action Plan, identification of a preferred concept, relationship of the project to the Sunset Area Plan and Sunset Area Plan Environmental Impact Report, discussion of solid waste project elements versus complementary and programmatic elements, additional information related to project baseline, and MRF design concept evaluation included in the Draft EIR.
- **Chapters 5 through 17, Resource Area Analysis**. Chapters 5 through 17 discuss the following resource areas of concern. Each chapter includes an introduction, description of the methodology, description of the setting (regulatory and regional), analysis of potential impacts, identification and description of relevant mitigation measures, determination of impact significance after mitigation, and references.
  - Chapter 5, Aesthetics
  - Chapter 6, Air Quality and Odors
  - Chapter 7, Biological Resources
  - Chapter 8, Cultural and Tribal Cultural Resources
  - Chapter 9, Geology, Soils, and Paleontology
  - Chapter 10, Greenhouse Gas Emissions and Climate Change
  - Chapter 11, Hazards, Hazardous Materials, and Wildfire
  - Chapter 12, Hydrology and Water Quality
  - Chapter 13, Land Use and Planning
  - Chapter 14, Noise
  - Chapter 15, Public Services
  - Chapter 16, Transportation and Traffic
  - Chapter 17, Utilities and Energy
- **Chapter 18, Alternatives.** This chapter contains a reasonable range of alternatives to the proposed project, including the No Project Alternative. Each alternative is analyzed for feasibility, its ability to achieve the project objectives, and its ability to potentially avoid or substantially lessen significant environmental impacts associated with the proposed project.
- **Chapter 19, Cumulative Impacts**. This chapter includes a discussion of cumulative projects and impacts of the proposed project that may be cumulatively considerable.
- **Chapter 20, Other CEQA-Required Sections.** This chapter includes a discussion of significant irreversible environmental changes, growth-inducing impacts of the proposed project, and effects found not to be significant.

- **Chapter 21, Draft EIR Preparers and Contributors.** This chapter lists the primary authors and technical specialists for each resource area who contributed to preparation of the Draft EIR.
- **Appendixes**. The following appendixes to the Draft EIR are included:
  - Appendix A: NOP and Responses to Comments Received
  - Appendix B: Visual Resources Rating Forms
  - Appendix C.1: Methodology for Air Quality and Greenhouse Gas Impact Analysis
  - Appendix C.2: Air Quality Emission Calculations: Criteria Pollutants, Greenhouse Gases, and Toxic Air Contaminants
  - Appendix C.3: LandGEM Modeling Results
  - Appendix C.4: Air Dispersion and Health Risk Assessment Modeling Protocol
  - Appendix C.5: Health Risk Assessment Modeling Report
  - Appendix C.6: Site-Wide Odor Plan for the Western Placer Waste Management Authority's Solid Waste Processing and Disposal Facility
  - Appendix D: Project-Applicable Conditions on Covered Activities from the PCCP

1.10 References

Golder Associates, Inc. 2017. *Joint Technical Document, Western Regional Sanitary Landfill, Placer County, California, Volume I*. August.

Golder Associates, Inc. 2018. *Pre-Subtitle D Area Waste Relocation Workplan, Western Placer Waste Management Authority*. Submitted to Jacobs. September.

Lawrence & Associates. 1995. *Revised Article 5 Monitoring Plan for Western Regional Sanitary Landfill, Placer County, California*. May.

Placer County Community Development Resource Agency (Placer County). 2019. *Sunset Area Plan / Placer Ranch Specific Plan Final Environmental Impact Report*. State Clearinghouse #2016112012. October. Prepared by Ascent Environmental, Sacramento, CA.

Western Placer Waste Management Authority (WPWMA). 2014. *Western Placer Waste Management Authority Materials Recovery Facility, Transfer/Processing Report and Report of Composting Site Information, Final*. December.

Western Placer Waste Management Authority (WPWMA). 2016–. *Odor Impact Minimization Plan.* Continually updated.

Western Placer Waste Management Authority (WPWMA). 2020. *Renewable Placer: Waste Action Plan.* https://renewableplacer.com/.

2. Executive Summary

The Renewable Placer: Waste Action Plan (project) is a proposal by the Western Placer Waste Management Authority (WPWMA) to implement the Waste Action Plan within the properties owned by the WPWMA in western Placer County. The WPWMA has identified two separate plan concepts for implementing the Waste Action Plan, which are evaluated at an equal level of detail in this Draft Environmental Impact Report (DEIR). These two plan concepts were developed through a detailed planning process that included convening an Advisory Committee composed of key staff from each of WPWMA's Member Agencies; organizing a Stakeholder Working Group consisting of nearby commercial entities, developers, environmental groups, and residential neighborhood representatives; and preparing detailed technical evaluations.

This DEIR addresses the potential environmental impacts that are anticipated to result from implementation of the proposed project. The DEIR has been prepared in accordance with the California Environmental Quality Act (CEQA). The WPWMA is the lead agency for the CEQA process and has independently evaluated, directed, and supervised the preparation of this document. The Executive Summary identifies the purpose of the DEIR, provides an overview of the proposed project and alternatives, summarizes the major findings and conclusions of the DEIR, identifies the potential impacts of the proposed project, and summarizes the recommended mitigation measures.

2.1 Purpose of this Document

An EIR is a public informational document used for planning and decision-making purposes. The WPWMA will consider the information in the EIR, including the public comments and staff response to those comments, during the public hearing process. As a legislative act, the final decision is made by the WPWMA Board of Directors, who may approve, conditionally approve, or deny the project. The purpose of an EIR is to identify the following:

- Significant potential impacts of the proposed project on the environment and indicate the manner in which those significant impacts can be avoided or mitigated
- Any unavoidable adverse impacts that cannot be mitigated
- Reasonable and feasible alternatives to the project that would eliminate any significant adverse environmental impacts or reduce the impacts to a less-than-significant level

An EIR also discloses growth-inducing impacts; impacts found not to be significant; and significant cumulative impacts of past, present, and reasonably anticipated future projects. CEQA requires an EIR be prepared that reflects the independent judgment of the lead agency regarding the impacts, the level of significance of the impacts both before and after mitigation, and mitigation measures proposed to reduce the impacts.

2.2 Overview of the Proposed Project

The Waste Action Plan includes solid waste elements, complementary and programmatic elements, and supporting elements that are incorporated in both Plan Concept 1 and Plan Concept 2. The plan concepts contain these similar elements, but the locations and characteristics of the elements vary between the two concepts. Solid waste (Waste Recovery and Waste Disposal) project elements and supporting elements include those directly under the WPWMA's control. Complementary and programmatic elements include those that may involve third parties.

Solid waste project elements are the Waste Recovery and Waste Disposal project elements that are needed to continue providing solid waste management services to the WPWMA's Participating Agencies in the near and long term. These project elements are summarized as follows:

2.2.1 Waste Recovery

- Expanded Operation of Materials Recovery Building – The proposed project includes continued and expanded operation of the Materials Recovery Facility (MRF) Building to accommodate growth in the waste stream.
- Expanded and Redesigned Organics Management Operation – The organics management operation would include an expanded and redesigned organics processing operation to increase capacity to accommodate growth in the organics waste stream and increased organic diversion required by new state-mandated organics diversion regulations (Senate Bill 1383) to accept additional compostable material streams (e.g., food waste, other organics), and to improve odor control.
- Expanded and Redesigned Construction and Demolition Materials Processing Operation – The construction and demolition (C&D) materials processing operation is proposed to be redesigned to increase capacity to accommodate growth in the waste stream and respond to increased state-mandated diversion requirements (e.g., CALGreen Building Standards) and the needs of Participating Agencies.
- Expanded and Redesigned Public Waste Drop-off Area Operations – The public waste drop-off area operations are proposed to include a new public waste tipping area, material buy-back center, household hazardous waste (HHW) facilities, reuse store, and a new entrance kiosk with vehicle queuing lanes. The expanded and redesigned public waste drop-off area operations are proposed to accommodate population growth and associated facility use, support customer safety and convenience, and provide opportunities for increased material diversion (e.g., operation of a reuse store).

2.2.2 Waste Disposal

- Expanded Landfill Disposal Capacity – The Western Regional Sanitary Landfill's (WRSL's) disposal capacity is proposed to be expanded to accommodate current and future Participating Agency solid Waste Disposal demands. This element addresses landfill expansion, tonnage and vehicle limit changes, and landfill environmental monitoring and control systems.
- Excavation of Existing Solid Waste – Closed and pre-Subtitle D sections of the WRSL are proposed to be excavated and relocated to a Subtitle D-compliant module on the site. Subtitle D of the Resource Conservation and Recovery Act (Part 258 of the *Code of Federal Regulations* [CFR]) regulates the design, operation, and monitoring of municipal solid waste landfills.

Complementary and Programmatic Elements are the project elements that are not specifically required to provide continued solid waste management services to the Participating Agencies but are important in achieving other project objectives (e.g., create opportunities for innovation and economic growth, enhance opportunities to increase recycling and landfill waste diversion, and enhance ability to comply with regulations). These project elements include the following:

- Compatible Technologies – Space would be reserved for third-party commercial or full-scale compatible technologies and manufacturing operations that would take materials and products primarily from the WPWMA's facility to produce beneficial products, including renewable energy, fuels, and marketable commodities.
- Pilot Study Area – Space would be reserved for third parties to conduct pilot studies, using materials and products primarily from the WPWMA's facility and processing them in new ways or producing beneficial products, including renewable energy, fuels, and marketable commodities.
- University Research Area – Space would be reserved for university-led research, using materials and products primarily from the WPWMA's facility and processing them in new ways or producing beneficial products, including renewable energy and marketable commodities. This could also include more general solid waste-related research to, for example, improve facility diversion, increase efficiencies, and lower environmental impacts.

- Landfill Gas (LFG)-to-Compressed Natural Gas Area – Space would be reserved for a potential third-party or WPWMA-led facility that would convert LFG to compressed natural gas, hydrogen or other renewable fuel that could be used to fuel vehicles operated by local governments, waste hauling or other private companies, or otherwise be transferred to other end users.

Supporting Elements are the project elements required to support the solid waste management and complementary and programmatic elements. Some of these elements already exist at the site and would be modified with project implementation, and some would be new additions. The elements include recovered materials storage areas, stormwater ponds, road crossings, maintenance areas, administrative buildings, facility parking, entrance facilities, wastewater and water supply infrastructure, LFG-to-energy plant, and site perimeter infrastructure.

2.2.3 Potential Facility Operating Contract Amendments

The WPWMA is currently undergoing a competitive procurement process for the future near-term (approximately 10-year) waste recovery and waste disposal contract operations. As part of that process, the WPWMA received proposals for waste recovery operations (termed MRF operations for the Request For Proposal [RFP]) and for waste disposal operations (termed landfill operations for the RFP). The WPWMA's procurement process is ongoing as of the preparation of this EIR and conceptual designs associated with the proposals for MRF operations are preliminary and do not contain enough detail to alter the details of Plan Concept 1 or Plan Concept 2.

2.2.4 Baseline Condition and Plan Concept Comparison

For purposes of analysis in this DEIR, the baseline conditions are those that existed on the three WPWMA-owned properties when the Notice of Preparation was released on March 15, 2019. For solid waste operations that fluctuate on a daily basis, the baseline is based on averages from calendar year 2018, unless otherwise specified. A full calendar year was used to capture the full range of operations that typically occur at the site over four seasons.

The Waste Action Plan includes solid waste, complementary and programmatic, and supporting elements that are incorporated in both Plan Concept 1 and Plan Concept 2. The plan concepts contain these similar elements, but the locations and characteristics of the elements vary between the two plan concepts.

Tables 2-1, 2-2, and 2-3 summarize the environmental baseline and the changes associated with both plan concepts for solid waste project elements, complementary and programmatic elements, and supporting elements, respectively.

2.2.5 Preferred Plan Concept

The proposed project is implementation of the Waste Action Plan, and Plan Concepts 1 and 2 have been identified as two options for implementing the Waste Action Plan. Accordingly, Plan Concepts 1 and 2 have been evaluated at an equal level of detail in this EIR.

While the WPWMA believes that identification and evaluation of two plan concepts to implement the Waste Action Plan provides the public and decision makers with robust review and disclosure regarding the potential environmental impacts associated with implementation of the Waste Action Plan, and although both Plan Concepts would achieve the Waste Action Plan objectives and would meet WPWMA's long-term operational needs, the WPWMA identified Plan Concept 1 as the preferred plan concept, as described in detail in Section 4.2.

Table 2-1. Summary of Environmental Baseline and Change Associated with Solid Waste Elements

Waste Action Plan Project Element	Environmental Baseline	Plan Concept 1 Change	Plan Concept 2 Change
Sitewide Operations			
Material Tonnage Permit Limits	Waste Recovery operations limited to 1,750 tpd; Waste Disposal operations limited to 1,900 tpd	Sitewide solid waste management activities limited to a rolling 7-day average of 4,000 tpd	Sitewide solid waste management activities limited to a rolling 7-day average of 4,000 tpd
Vehicle Permit Limits	Waste Recovery operations limited to 1,014 vehicles per day; Waste Disposal operations limited to 624 vehicles per day	The permitted vehicle limits for Waste Recovery and Waste Disposal operations would be eliminated	The permitted vehicle limits for Waste Recovery and Waste Disposal operations would be eliminated
Material Tons	The WPWMA facility received 483,968 tons of solid waste material in 2018	The WPWMA facility would receive up to 912,200 tons of solid waste material by 2050	The WPWMA facility would receive up to 912,200 tons of solid waste material by 2050
Material Recovery	Approximately 39% of material received at the site was recovered from the waste stream in 2018	The WPWMA facility would have a material recovery rate of 50% or greater by 2050	The WPWMA facility would have a material recovery rate of 50% or greater by 2050
Odor Management	Odors are managed by facility (in particular, MRF building, composting operation, WRSL)	Odors would be managed sitewide through implementation of a SWOP	Odors would be managed sitewide through implementation of a SWOP
Waste Recovery			
MRF Operation	The MRF building processed 240,068 tons in 2018	The MRF building would process up to 416,600 tons per year	The MRF building would process up to 416,600 tons per year
Expanded and Redesigned Organics Management Operation	Organics management operation located in the northern part of the center property	Expanded organics management relocated to the central part of the western property	Expanded organics management operation within the northern part of the center property. Requires relocation of waste in modules 1, 2, 10, and 11
	Organics management operation, using composting	Designed to accommodate composting but could also accommodate other organics management methods	Designed to accommodate composting but could also accommodate other organics management methods
	The composting operation processed 60,606 tons in 2018, with minimal food waste	The composting operation would process up to 157,900 tons by 2050; food waste added	The composting operation would process up to 157,900 tons by 2050; food waste added

Table 2-1. Summary of Environmental Baseline and Change Associated with Solid Waste Elements

Waste Action Plan Project Element	Environmental Baseline	Plan Concept 1 Change	Plan Concept 2 Change
	Two compost leachate collection ponds on center property	50% increase in overall pond capacity and removal of pond on center property	50% increase in overall pond capacity and removal of pond on center property
	Processing via windrow piles	Processing transitions from windrows to ASP technology	Processing transitions from windrows to ASP technology
	Compostable materials received outside	Potential construction of a food waste receiving building	Potential construction of a food waste receiving building
	Odor control consists of implementation and maintenance of good operating practices consistent with the OIMP	Odor control consists of implementing a SWOP, which incorporates the OIMP; odor control improved by change in composting technology and use of biofilter layer on the compost piles	Odor control consists of implementing a SWOP, which includes the OIMP; odor control improved by change in composting technology and use of biofilter layer on the compost piles
Expanded and Redesigned C&D Materials Processing Operation	C&D materials processing located in the northern part of the center property	C&D materials processing operation increased in size by 2 to 3 times on the center property	C&D materials processing operation increased in size by 2 to 3 times on the center property and integrated with expanded composting operation and redesigned public waste drop-off; requires relocation of waste in modules 1, 2, 10, and 11
	The C&D materials processing operation, including inerts area, processed 87,404 tons in 2018	The C&D materials processing operation would process up to 174,600 tons per year of C&D plus 55,200 tons per year inerts by 2050	The C&D materials processing operation would process up to 174,600 tons per year of C&D plus 55,200 tons per year inerts by 2050
Expanded and Redesigned Public Waste Drop-Off Area Operations	Public waste drop-off area operations (tipping area, buy-back center, HHW) located in the northern part of the center property	Public waste drop-off area operations expanded and redesigned and relocated to the western property; new facilities include a public tipping area, material buy-back center, HHW waste drop-off area, reuse store, and entrance kiosk with vehicle queuing	Expanded and redesigned public waste drop-off operations on the center property; new facilities include public tipping area, material buy-back center, HHW waste drop-off area, and reuse store; requires relocation of waste in modules 1, 2, 10, and 11
	Public waste drop-off area operations received 44,194 tons in 2019	Public waste drop-off area operations would receive up to 83,300 tons by 2050	Public waste drop-off area operations would receive up to 83,300 tons by 2050

Table 2-1. Summary of Environmental Baseline and Change Associated with Solid Waste Elements

Waste Action Plan Project Element	Environmental Baseline	Plan Concept 1 Change	Plan Concept 2 Change
Environmental control measures for Waste Recovery operations	Environmental control measures are implemented in a manner consistent with regulations to protect public health and the environment	Existing environmental control measures would continue and expand with the expanded Waste Recovery operations	Existing environmental control measures would continue and expand with the expanded Waste Recovery operations
Waste Disposal			
Increased Waste Disposal	Annual tons disposed – 288,838	Projected annual tons disposed – 521,100	Projected annual tons disposed – 521,100
Expanded Landfill Disposal Capacity	Waste footprint located on center property in one contiguous landfill footprint	Waste footprint expanded to eastern property in one contiguous landfill footprint	Waste footprint expanded to western property with distinct landfill footprints on the center and western properties
	Elevation – 196 feet AMSL and permitted peak elevation – 295 feet AMSL	Height increase above current conditions – 129 feet; height increase above currently permitted conditions – 30 feet	Height increase above current conditions – 129 feet; height increase above currently permitted conditions – 30 feet
	Permitted waste footprint – 231 acres	Waste footprint expands by 89 acres to 320 acres	Waste footprint expands by 131 acres to 362 acres
	Permitted capacity – 36.3 million cy	Landfill disposal capacity increases by approximately 45.1 million cy	Landfill disposal capacity increases by approximately 50.2 million cy
	Waste capacity exhausted by approximately 2058	Estimated landfill site life increases by approximately 43 years	Estimated landfill site life increases by approximately 52 years
	Eventual relocation of Waste Recovery operations on currently permitted Module 9 to allow for future landfill disposal	Elimination of currently permitted Module 9 for future Waste Disposal	Elimination of currently permitted Modules 8 and 9 for future Waste Disposal

Table 2-1. Summary of Environmental Baseline and Change Associated with Solid Waste Elements

Waste Action Plan Project Element	Environmental Baseline	Plan Concept 1 Change	Plan Concept 2 Change
Excavation of Existing Solid Waste	Waste in non-Subtitle D lined modules (modules 1, 2, 10, 11)	Module 1, 2, 10, and 11 contents would be excavated and relocated to an onsite Subtitle D-compliant module; excavated modules would be lined and reused for future Waste Disposal when needed; remaining excavated module areas would be backfilled with clean soil (starting in year 2045) within 5 years to accommodate expansion of solid waste activities on the center property	Module 1, 2, 10, and 11 contents would be excavated and relocated to an onsite Subtitle D-compliant module; a portion of Module 11 would be lined and reused for future Waste Disposal; remaining excavated module areas would be backfilled with clean soil within 3 years (starting in year 2024) to accommodate expansion of solid waste activities on the center property
	Peak elevations of Modules 1, 2, 10, and 11 do not exceed approximately 170 feet AMSL	The peak elevation of Modules 1, 2, 10, and 11 would be approximately 325 feet AMSL	A portion of Module 11 would be relined and incorporated into the remaining waste cells, which would be approximately 325 feet AMSL. Modules 1, 2, 10, and part of 11 would be filled with clean soil to match the surrounding ground elevation
Landfill Environmental Monitoring and Control Systems	Double-composite landfill liners are installed in modules constructed within the existing permitted landfill footprint	No changes in the liner systems; future modules would include double-composite liners	No changes in the liner systems; future modules would include double-composite liners
	Leachate, surface water, LFG management systems	The leachate, surface water, and LFG management systems would be expanded to accommodate the expanded landfill footprint and height	The leachate, surface water, and LFG management systems would be expanded to accommodate the expanded landfill footprint and height, and duplicated for the landfill expansion on the western property

Notes:

AMSL = above mean sea level
ASP = aerated static pile
C&D = construction and demolition
cy = cubic yard(s)
OIMP = Odor Impact Minimization Plan
SWOP = Site-Wide Odor Plan
tpd = ton(s) per day

Table 2-2. Summary of Environmental Baseline and Change Associated with Complementary and Programmatic Elements

Waste Action Plan Project Element	Environmental Baseline	Plan Concept 1 Change	Plan Concept 2 Change
Complementary and Programmatic Elements	Grazing operations on the eastern property, solid waste operations on the center property, and irrigation and model airplane operations on the western property	Project Level – Development of up to 300,000 square feet of buildings plus exterior infrastructure for industrial uses that are complementary to the solid waste management elements. Industrial uses may include compatible technologies, pilot study areas, university research areas, and an LFG to compressed natural gas area Program Level – Up to 1.6 million square feet of industrial uses that are complementary to the solid waste management elements	Project Level – Development of up to 300,000 square feet of buildings plus exterior infrastructure for industrial uses that are complementary to the solid waste management elements. Industrial uses may include compatible technologies, pilot study areas, university research areas, and an LFG to compressed natural gas area Program Level – Up to 1.6 million square feet of industrial uses that are complementary to the solid waste management elements
		Project Level – Located on the northern part of the western property Program Level – Primarily in the northern and southern parts of the western property, plus locations on the center property, although some uses may be developed in closer proximity to the solid waste project elements or within areas not yet developed with solid waste project elements	Project Level – Located on the northern part of the eastern property Program Level – Primarily on the eastern property, plus locations on the center property and southern part of the western property, although some uses may be developed in closer proximity to the solid waste project elements or within areas not yet developed with solid waste project elements

Table 2-3. Summary of Environmental Baseline and Change Associated with Supporting Elements

Waste Action Plan Project Element	Environmental Baseline	Plan Concept 1 Change	Plan Concept 2 Change
Waste Recovery and Waste Disposal – Supporting Elements	Materials recovered from the MRF operations are stored either within or outside of the MRF building, depending on materials type and space constraints	Construction of a new recovered materials storage building and increased ability to store recovered materials inside	Construction of a new recovered materials storage building and increased ability to store recovered materials inside
	Stormwater ponds on center property	New and expanded stormwater ponds on western, center, and eastern properties	New and expanded stormwater ponds on western and center properties
	Road crossings between center and western property limited to public roads	Separated facility-only crossing of Fiddyment Road that would connect center and western properties	Separated facility-only crossing of Fiddyment Road that would connect center and western properties
	Maintenance facility on the center property	Center property maintenance facility would be upgraded and a new satellite maintenance facility would be constructed on the western property (for compost and public waste drop-off operations)	Center property maintenance facility would be upgraded and a new satellite maintenance facility would be constructed on the western property (for landfill operations)
	Administration building on the center property	Expansion or addition of administration building with an education center and parking	Expansion or addition of administration building with education center and parking
	Entrance facilities on Athens Avenue	Upgraded Athens Avenue entrance facilities, including site access and scale house infrastructure when needed	Upgraded Athens Avenue entrance facilities, including site access and scale house infrastructure when needed
	Restricted dirt road access to western property at Fiddyment Road and Athens Avenue intersection	New paved site entrance to western property at Fiddyment Road and Athens Avenue intersection to accommodate public access to the western property	New paved site entrance to western property at Fiddyment Road and Athens Avenue intersection to accommodate expanded landfill operation

Table 2-3. Summary of Environmental Baseline and Change Associated with Supporting Elements

Waste Action Plan Project Element	Environmental Baseline	Plan Concept 1 Change	Plan Concept 2 Change
	Wastewater and fire protection water line used for the existing Public Waste Drop-Off Area operations	A new wastewater and new fire protection water line extending to the western property would be necessary to service the relocated public waste drop-off area operations	A new wastewater and fire protection water line extending to the western property would be necessary to service the expanded landfill operations
	LFG-to-energy plant operations on center property	No change to continued LFG-to-energy plant operations on the center property	No change (beyond LFG management systems on the western property, mentioned in Table 3-1) to continued LFG-to-energy plant operations on the center property
	Landscaping and fencing located along sections of the center property	Expanded perimeter landscaping and fencing to surround entire project site	Expanded perimeter landscaping and fencing to surround entire project site

2.3 Project Alternatives

Section 15126.6(c) of the CEQA Guidelines requires an EIR to describe a range of reasonable alternatives to the proposed project, or to the location of the proposed project, which could feasibly attain most of the basic project objectives while also avoiding or substantially lessening any of the significant environmental effects of the proposed project.

Alternatives considered by the WPWMA but eliminated from detailed discussion in this EIR include the following:

- Alternative Location in Placer County
- Landfill Closure and Transfer to Out-of-County Landfill

Alternatives considered by WPWMA and evaluated in this EIR include the following:

- No Project (Alternative A)
- Prioritize Waste Recovery Alternative (Alternative B)
- No Organics Processing Alternative (Alternative C)
- Three-Bin Clean MRF Alternative (Alternative D)

A comparative summary of the significance of potential environmental impacts associated with the project alternatives compared with the preferred plan concept is provided in Table 18-5.

2.3.1 Alternatives Considered but Eliminated

Alternative Location in Placer County

Under the Alternative Location in Placer County Alternative, the WPWMA would relocate all solid waste management activities to a new facility located within Placer County where it could continue to provide the solid waste management needs of Placer County and the cities of Lincoln, Rocklin, and Roseville, although the exact location of such a facility is unknown and speculative. This alternative has been eliminated from consideration in this EIR.

Landfill Closure and Transfer to Out-of-County Landfill

Under this alternative, the WPWMA's role in solid waste management at the site would be limited to sorting municipal solid waste only and sending other materials offsite for processing (e.g., organics, C&D debris) or for disposal at an out-of-county landfill. Under this alternative, each jurisdiction would eventually (within approximately 3 years) need to arrange for organic waste management and C&D processing through their own facilities, contracts, and collections. This alternative has been eliminated from consideration in this EIR.

2.3.2 Evaluation of Project Alternatives

Alternative A: No Project Alternative

Under Alternative A, the No Project Alternative, the WPWMA would continue providing solid waste management services at the current location. Activities allowed under existing permits would continue until the WRSL reaches capacity, at which time, the landfill portion of the facility would close. Solid waste management services would be limited to the center property and existing permit limits. Under Alternative A, there would be no change in how waste is collected and delivered to the site (single-stream mixed waste), and municipal solid waste would continue to be delivered to the site and processed through the MRF building accordingly.

Alternative B: Prioritize Waste Recovery

The Prioritize Waste Recovery Alternative (Alternative B) is similar to Plan Concept 2 of the proposed project, in that it concentrates waste recovery activities on the center property. However, Alternative B eliminates expansion of the WRSL onto the eastern or western properties and adds complementary and programmatic elements on the western property only. No activity would occur on the eastern property or the northern portion of the western property.

Alternative C: No Organics Processing

The No Organics Processing Alternative (Alternative C) is similar to Plan Concept 1 of the proposed project but excludes processing of organic waste. Like Plan Concept 1, Alternative C uses all of the WPWMA's properties. The WRSL would be expanded onto the eastern property, creating a single landfill mound with disposal capacity until approximately 2101. The public waste drop-off area would be relocated to the western property, with a new entrance to the western property at the intersection of Athens Avenue and Fiddyment Road. On the center property, the waste relocation and excavation would be expected to occur, the C&D facility would be expanded, and other facilities would be expanded or redesigned similar to the proposed project. Under this alternative, each jurisdiction would need to arrange for organic waste management through their own facilities, contracts, and collections.

Alternative D: Three-Bin Clean MRF

The Three-Bin Clean MRF Alternative (Alternative D) is similar to Alternative A (No Project), in that solid waste management activities would occur only on the center property. However, the Clean MRF Alternative makes several distinct changes regarding solid waste management. For the Clean MRF Alternative, the current single-stream mixed-waste system for waste collection would convert to a three-bin system that would require each Participating Agency and their designated waste haulers to comply accordingly. Correspondingly, the existing "dirty" MRF (one that sorts incoming mixed municipal waste) would be converted to a "clean" MRF (one that only sorts source-separated mixed recyclables and not commingled recyclables, green waste, or food waste). Because there would be no mixed-waste processing, the waste bin (referred to as a black bin) of the three-bin system would be delivered directly to the WRSL for disposal. Consequently, once black bin waste material is received onsite, there would be no opportunity for removing potential recyclables or organics from that part of the waste stream.

Environmentally Superior Alternative

Among the alternatives evaluated, CEQA requires that a DEIR identify the environmentally superior alternative. Based on the discussion of the various alternatives, the alternative that would result in the fewest onsite or local environmental impacts is Alternative A, the No Project Alternative, although it would not achieve the project objectives.

According to Section 15126.6(e)(2) of the CEQA Guidelines, if the environmentally superior alternative is the No Project Alternative, "the EIR shall also identify an environmentally superior alternative among the other alternatives." As such, the WPWMA has determined that Alternative C (No Organics Processing) is the environmentally superior alternative, although it would not achieve the project objectives.

2.4 Summary of Project Impacts and Mitigation

A summary of the significance of potential environmental impacts associated with the plan concepts is provided in Table 2-4.

Table 2-4. Summary of Impacts and Mitigation Measures

Impact	Mitigation Measure	Plan Concept 1		Plan Concept 2	
		Significance Before Mitigation	Significance After Mitigation	Significance Before Mitigation	Significance After Mitigation
Chapter 5 Aesthetics					
Impact 5-1: Impacts to Visual Character and Quality The proposed project would expand Waste Recovery and Waste Disposal activities onto currently vacant portions of the project site, and an expanded and taller landfill would reduce the visual quality of the site and its surroundings.	**Mitigation Measure 5-1: Impacts to Visual Character and Quality** Because both plan concepts would expand the landfill's final elevation substantially above the surrounding area, mitigation measures intended to visually screen the landfill from local and distant viewpoints would be ineffective. Therefore, no mitigation measures are available to reduce this impact to a less-than-significant level.	Significant Impact	Significant Impact	Significant Impact	Significant Impact
Impact 5-2: Impacts from Light or Glare New sources of light and glare would be consistent with local regulations intended to control and reduce lighting impacts. Additionally, proposed project lighting would not be out of scale in rapidly developing western Placer County.	None required.	Less than Significant	Less than Significant	Less than Significant	Less than Significant
Impact 5-3: Impacts from Offsite Litter Generation Litter is generated offsite by vehicles accessing the MRF and the WRSL.	**Mitigation 5-3: Impacts from Offsite Litter Generation** Although an extensive offsite litter control program is in place at the facility and would continue in the future with implementation of the proposed project, the impact of increased litter through the extended life of the WRSL would be considered significant and unavoidable. Therefore, WPWMA would implement a tarping policy that requires incoming loads to use tarps, thus minimizing the potential for offsite litter generation. However, even with implementation of a tarping policy, this impact would remain significant.	Significant Impact	Significant Impact	Significant Impact	Significant Impact

Table 2-4. Summary of Impacts and Mitigation Measures

Impact	Mitigation Measure	Plan Concept 1		Plan Concept 2	
		Significance Before Mitigation	Significance After Mitigation	Significance Before Mitigation	Significance After Mitigation
Chapter 6 Air Quality					
Impact 6-1: Consistency with Applicable Air Quality Plans. PCAPCD and other air districts in the SVAB develop and implement air quality plans to enable the region to achieve attainment of the federal and state standards (that is, NAAQS and CAAQS) for ozone, $PM_{2.5}$, and PM_{10}, and maintain compliance with standards. These air quality plans are based on an inventory of existing emission sources as well as projections about future development in Placer County and the SVAB. The SAP DEIR/FEIR concluded that the levels of growth associated with the SAP project, including development of WPWMA solid waste elements, supporting elements, and land use changes similar to those proposed as complementary and programmatic elements under the proposed project, were accounted for in the projections of emissions-generating activity used in the air quality planning documents. However, the emissions estimates prepared to support this analysis of the proposed project indicate that the construction and operation of the solid waste elements, complementary and	**Mitigation Measure 6-1: Consistency with applicable air quality plans** Through the air permitting process and implementation of BMPs and project design measures in Table 6-1, the WPWMA shall work with the PCAPCD to provide information on the construction and operation of the solid waste elements, complementary and programmatic elements, and supporting elements under the proposed project. The emissions estimates prepared to support this CEQA air quality impact analysis are based on many conservative assumptions (as described in the sections to follow and in Appendix C.2) to allow flexibility as the project elements move forward through planning, design, funding, and implementation. The methodology for this air quality and environmental assessment is consistent with the CEQA Handbook that PCAPCD prepared for evaluation and mitigation of projects in Placer County (PCAPCD 2017a). Current results and conclusions are based on criteria used by PCAPCD to evaluate potential air quality impacts, using PCAPCD-recommended emissions calculation methods, significance thresholds, and mitigation strategies. All projects in Placer County are subject to PCAPCD's adopted rules and regulations. Specific local air quality rules applicable to implementation of the proposed project have been evaluated for applicability to the project elements, and results show that the proposed project elements (solid waste elements, complementary and programmatic elements, and supporting elements) would comply with applicable regulatory and permitting requirements.	Significant Impact	Less than Significant	Significant Impact	Less than Significant

Table 2-4. Summary of Impacts and Mitigation Measures

Impact	Mitigation Measure	Plan Concept 1		Plan Concept 2	
		Significance Before Mitigation	Significance After Mitigation	Significance Before Mitigation	Significance After Mitigation
programmatic elements, and supporting elements under the proposed project would have the potential to exceed PCAPCD's numerical thresholds of significance for emissions of the ozone precursor NOx, PM_{10}, and $PM_{2.5}$. These emissions increases could contribute to the existing nonattainment status of Placer County and the SVAB region with respect to the NAAQS for ozone and $PM_{2.5}$, and the CAAQS for ozone and PM_{10}, and could impede air quality planning efforts to bring the air basin into attainment of the health-protective NAAQS and CAAQS. For these reasons, the project would potentially conflict with implementation of the applicable air quality plans.					
Impact 6-2: Construction Emissions of Criteria Air Pollutants and Ozone Precursors. Total maximum daily construction emissions estimated for the development of solid waste elements, complementary elements, and supporting elements under the proposed project would exceed PCAPCD's recommended construction significance threshold of 82 lb/day for	**Mitigation Measure 6-2(a): Construction emissions of criteria air pollutants (PM_{10} and $PM_{2.5}$) and ozone precursors.** Construction contractor(s) shall document their capability and commitment to implement PCAPCD's recommended construction mitigation measures and the project design measures identified in Table 6-1 as part of their grading and improvement plan submittals. Prior to any construction activity, the contractor(s) shall submit a Construction Emission and Dust Control Plan to PCAPCD a minimum of 21 days before construction activity is scheduled to commence. To further mitigate the significant air quality impact identified for construction PM_{10} emissions, the following additional mitigation	Significant Impact	Significant and Unavoidable	Significant Impact	Significant and Unavoidable

Table 2-4. Summary of Impacts and Mitigation Measures

Impact	Mitigation Measure	Plan Concept 1		Plan Concept 2	
		Significance Before Mitigation	Significance After Mitigation	Significance Before Mitigation	Significance After Mitigation
PM_{10}. Exceedance of the threshold indicates that air quality impacts associated with project-related construction emissions would be significant for PM_{10}. Because $PM_{2.5}$ is a subset of PM_{10}, the significance finding for PM_{10} is conservatively used to indicate potentially significant impacts related to $PM_{2.5}$. Prediction of the specific health consequences associated with the criteria pollutant emissions from an individual project is not feasible at this time. More generally, by exceeding PCAPCD's numerical thresholds, construction-generated emissions of PM_{10} could contribute to the existing nonattainment status of Placer County and the SVAB region with respect to the CAAQS and the NAAQS for PM_{10} and $PM_{2.5}$, respectively. The NAAQS and CAAQS represent concentrations of criteria air pollutants that provide public health protection, including protecting the health of sensitive populations. Because estimated maximum daily construction emissions would exceed the PCAPCD significance threshold, it is	measures, expanding on those identified in Table 6-1 as BMPs and project design measures,[8] shall be implemented to address exhaust PM_{10} and $PM_{2.5}$ emissions and provide dust control. Mitigation Measure 6-2(b): Project contractor(s) shall implement BMPs prior to or during all construction activities, including onsite construction-related grading. The WPWMA shall require all construction contracts and plans to include the applicable construction BMPs and project design measures from Table 6-1, as well as the following: ▪ Designation of a person or persons to monitor fugitive dust emissions and enhance implementation of the Dust Control Plan to minimize dust complaints, reduce visible emissions to below 20 percent opacity, and prevent transport of dust offsite. Duties shall include holidays and weekend periods when work may not be in progress. ▪ Post signage at property boundaries with name(s) and contact information for designated person(s) for reporting of dust complaints. ▪ All roadways, driveways, sidewalks, parking lots intended for pavement as part of an applicable construction project shall be paved as soon as possible. In addition, building pads shall be laid immediately after grading unless seeding or soil binders are used. **Mitigation Measure 6-2(c):** The WPWMA shall implement a recordkeeping program to oversee and enforce compliance with the BMP requirement for diesel-fueled equipment to use engines that				

[8] Note: Applicable measures from PCAPCD's recommended construction mitigation measures (PCAPCD 2017a) are incorporated in the proposed project as project design measures. For the list of BMPs and project design measures incorporated in the proposed project, please see the list of measures in Table 6-1.

Table 2-4. Summary of Impacts and Mitigation Measures

Impact	Mitigation Measure	Plan Concept 1		Plan Concept 2	
		Significance Before Mitigation	Significance After Mitigation	Significance Before Mitigation	Significance After Mitigation
reasonably foreseeable that construction-generated PM_{10} emissions could result in increases in ambient air concentrations of PM_{10} and $PM_{2.5}$, and could contribute to higher levels of exposure and health effects for some sensitive receptors. However, it would be misleading and speculative to correlate the estimated PM_{10} emissions to specific health outcomes. Construction of the proposed project could result in a net increase of criteria pollutants (PM_{10} and $PM_{2.5}$) for which the project region is nonattainment under an applicable and health-protective federal or state ambient air quality standard.	meet Tier 4 Final emission standards, as certified by CARB, or cleaner, prior to or during onsite grading and construction activities. This mitigation measure is intended for WPWMA oversight to ensure that all diesel-fueled construction equipment shall have engines that meet the Tier 4 Final emission standards, as certified by CARB, or cleaner, if feasible (City of Sacramento 2021). This requirement shall be verified through contractor submittal of an equipment inventory to the WPWMA for each construction project that includes the following information: A. Type of Equipment B. Engine Year and Age C. Number of Years Since Rebuild of Engine (if applicable) D. Type of Fuel Used E. Engine Horsepower F. Verified Diesel Emission Control Strategy (VDECS) information, if applicable, and other related equipment data If any new equipment is added after submission of the inventory, the contractor(s) shall contact the WPWMA regarding the new equipment being used. The project contractor(s) must also provide a signed Certification Statement for documentation of compliance and for future review by the WPWMA as needed. The Certification Statement shall state that the contractor agrees to compliance and acknowledges that a violation of this requirement shall constitute a material breach of contract. The WPWMA may waive the equipment requirement above only under the following unusual circumstances:				

Table 2-4. Summary of Impacts and Mitigation Measures

Impact	Mitigation Measure	Plan Concept 1		Plan Concept 2	
		Significance Before Mitigation	Significance After Mitigation	Significance Before Mitigation	Significance After Mitigation
	▪ A particular piece of off-road equipment with Tier 4 Final standards is technically not feasible or not commercially available. ▪ The equipment would not produce desired emissions reduction due to expected operating modes. ▪ Installation of the equipment would create a safety hazard or impair visibility for the operator. ▪ There is a compelling emergency need to use other alternate off-road equipment. If the WPWMA grants the waiver, the contractor shall use the next cleanest piece of off-road equipment available, as detailed in Table 6-9. If seeking a waiver from this requirement it must be demonstrated, to the satisfaction of the WPWMA, that the emissions do not exceed significance thresholds. If the project implements the "step down" approach, using construction equipment with less than Tier 4 emissions standards and the resulting emissions exceed the PCAPCD threshold, a mitigation fee (per ton of emissions) shall be assessed to achieve the remaining mitigation. Table 6-9 describes the Off-Road Equipment Compliance Step Down approach: ▪ If engines that comply with Tier 4 Final off-road emission standards are not commercially available, then the contractor shall meet Compliance Alternative 1. ▪ If off-road equipment meeting Compliance Alternative 1 is not commercially available, then the project sponsor shall meet Compliance Alternative 2. ▪ If off-road equipment meeting Compliance Alternative 2 is not commercially available, then the project sponsor shall meet Compliance Alternative 3.				

Table 2-4. Summary of Impacts and Mitigation Measures

<table>
<tr><th rowspan="2">Impact</th><th rowspan="2">Mitigation Measure</th><th colspan="2">Plan Concept 1</th><th colspan="2">Plan Concept 2</th></tr>
<tr><th>Significance Before Mitigation</th><th>Significance After Mitigation</th><th>Significance Before Mitigation</th><th>Significance After Mitigation</th></tr>
<tr><td></td><td>Table 6-9. Off-Road Equipment Compliance Step Down Approach
<table><tr><td>Compliance Alternative</td><td>Engine Emissions Standard</td><td>Emissions Control</td></tr><tr><td>1</td><td>Tier 4 Interim</td><td>Tier 4 Interim</td></tr><tr><td>2</td><td>Tier 3</td><td>CARB Level 3 VDECS</td></tr><tr><td>3</td><td>Tier 2 with retrofit</td><td>CARB Level 3 VDECS</td></tr></table>
For purposes of this mitigation measure, “commercially available” shall mean the availability of Tier 4 Final engines similar to the availability for other large-scale construction projects in the region occurring at the same time and taking into consideration factors such as (1) potential significant delays to critical-path timing of construction for the project and (2) geographic proximity to the project site of Tier 4 Final equipment.
The project contractor(s) shall maintain records concerning relevant efforts to comply with this requirement and provide them to WPWMA on a weekly basis during active construction periods.</td><td></td><td></td><td></td><td></td></tr>
<tr><td>Impact 6-3: Operational Emissions of Criteria Air Pollutants and Ozone Precursors. Estimated net changes in total emissions associated with the future operation of solid waste elements, complementary elements, and supporting elements under the proposed project would exceed PCAPCD’s recommended operational</td><td>Mitigation Measure 6-3: Operational emissions of criteria air pollutants and ozone precursors.
The WPWMA and their operation contractor(s) shall document their capability and commitment to implement the operational emission reduction BMPs and project design measures identified in Table 6-1 as part of their contracts and plan submittals. To further mitigate the significant air quality impacts identified for operational emissions of NOx and PM_{10}, the following additional mitigation measures, which</td><td>Significant</td><td>Significant and Unavoidable</td><td>Significant</td><td>Significant and Unavoidable</td></tr>
</table>

Table 2-4. Summary of Impacts and Mitigation Measures

Impact	Mitigation Measure	Plan Concept 1		Plan Concept 2	
		Significance Before Mitigation	Significance After Mitigation	Significance Before Mitigation	Significance After Mitigation
significance thresholds of 55 lb/day for NOx and 82 lb/day for PM_{10}. Exceedance of the thresholds indicates that air quality impacts associated with project-related operational emissions would be significant for NOx and PM_{10}. Because $PM_{2.5}$ is a subset of PM_{10}, the significance finding for PM_{10} is conservatively used to indicate potentially significant impacts related to $PM_{2.5}$. Operational emissions from the proposed project could contribute to the existing nonattainment status of Placer County and the SVAB region with respect to the NAAQS for ozone and $PM_{2.5}$, and the CAAQS for ozone and PM_{10}. It is reasonably foreseeable that operational emissions could result in increases in ambient air concentrations of ozone, PM_{10}, and $PM_{2.5}$, and could contribute to higher levels of exposure and health effects for some sensitive receptors. Prediction of the specific health consequences associated with the criteria pollutant emissions and ozone precursors from operation of an	expand on those identified in Table 6-1 as BMPs and project design measures,[9] shall be implemented. **Mitigation Measure 6-3(a): Fund NOx emissions reductions through an Offsite Mitigation Fee Program.** The operation of solid waste elements, complementary elements, and supporting elements under the proposed project would result in net emissions increases in operational emissions that would exceed PCAPCD's recommended operational significance thresholds of 55 lb/day for NOx, even with implementation of the BMPs and project design measures listed in Table 6-1. The estimated total increase in NOx emissions estimated in excess of the significance threshold for this project under Plan Concept 1 is approximately 102.5 lb/day, equivalent to 9.4 tons per ozone season,[10] and under Plan Concept 2 is approximately 97.2 lb/day, equivalent to 8.9 tons per ozone season. To mitigate the net project-related increases in operational NOx emissions, the WPWMA shall participate in one of the following voluntary offsite mitigation programs: ▪ Establish and fund an offsite mitigation project to result in a NOx emission reduction equivalent to the total amount of emissions estimated to exceed the PCAPCD significance threshold over a single season. Developing an offsite mitigation program in western Placer County shall be coordinated with PCAPCD. Emission reductions achieved through the offsite mitigation program must be real and quantifiable, as verified by PCAPCD. Examples of NOx emission reduction mitigation projects include, retrofitting, repowering, or replacing heavy-				

[9] Note: Applicable measures from PCAPCD's recommended operational emission mitigation measures (PCAPCD 2017a) are incorporated in the proposed project as project design measures. For the list of BMPs and project design measures incorporated in the proposed project, please see the list of measures in Table 6-1.

[10] The summer season is estimated at 184 days per year and applies to estimation of mitigation requirements for ozone precursors like NOx; the winter season is estimated at 181 days and applies for PM_{10} (PCAPCD 2017a).

Table 2-4. Summary of Impacts and Mitigation Measures

Impact	Mitigation Measure	Plan Concept 1		Plan Concept 2	
		Significance Before Mitigation	Significance After Mitigation	Significance Before Mitigation	Significance After Mitigation
individual project is not feasible at this time. Operation of the proposed project elements would result in a net increase of criteria pollutants (NOx as an ozone precursor, PM_{10}, and $PM_{2.5}$) for which the project region is nonattainment under the applicable and health-protective federal or state ambient air quality standards.	duty engines from mobile sources (for example, buses, construction equipment, on-road haulers), provision of electrical charging stations to support vehicle electrification, or other programs to reduce regional NOx emissions. ▪ Participate in the District's Offsite Mitigation Fee Program by paying the equivalent amount of money to mitigate the net project contribution of NOx that exceeds the 55 lb/day threshold over a single season. As indicated previously, the estimated NOx emissions offset requirement is approximately 9.4 tons/year for Plan Concept 1 and 8.9 tons/year for Plan Concept 2. The estimated mitigation fees for the NOx emissions increase associated with project operations is approximately $177,000 for Plan Concept 1 and $167,000 for Plan Concept 2, based upon PCAPCD's adopted cost-effectiveness rate of $18,790 per ton for ozone precursors like NOx and the current California CPI rate (PCAPCD 2017b, 2021b). The actual amount to be paid shall be determined based on the selected program and applicable cost-effectiveness rate agreed to by the WPWMA and PCAPCD and shall be paid by the WPWMA or other responsible parties. ▪ Any combination of the above or other measures, as determined feasible by WPWMA and PCAPCD. **Mitigation Measure 6-3(b): Fund PM_{10} emissions reductions through an Off-Site Mitigation Fee Program.** The operation of solid waste elements, complementary elements, and supporting elements under the proposed project would result in net emissions increases in operational emissions that would exceed PCAPCD's recommended operational significance thresholds of 82 lb/day for PM_{10}, even with implementation of the BMPs and project design measures listed in Table 6-1. The estimated total				

Table 2-4. Summary of Impacts and Mitigation Measures

Impact	Mitigation Measure	Plan Concept 1		Plan Concept 2	
		Significance Before Mitigation	Significance After Mitigation	Significance Before Mitigation	Significance After Mitigation
	increase in PM_{10} emissions estimated in excess of the significance threshold for this project under Plan Concept 1 is approximately 403.0 lb/day, equivalent to 36.5 tons per winter season, and for Plan Concept 2 is approximately 263.7 lb/day, equivalent to 23.9 tons per winter season. To mitigate the net project-related increases in operational PM_{10} emissions, the WPWMA shall participate in one of the following voluntary offsite mitigation programs: ▪ Establish and fund an offsite mitigation project to result in a PM_{10} emission reduction equivalent to the total amount of emissions estimated to exceed the PCAPCD significance threshold over a single season. Developing an offsite mitigation program in western Placer County shall be coordinated with PCAPCD. Emission reductions achieved through the offsite mitigation program must be real and quantifiable, as verified by PCAPCD. Examples of PM_{10} emission reduction mitigation projects include, among other, retrofitting, repowering, or replacing heavy-duty engines from mobile sources (for example, buses, construction equipment, on-road haulers), replacing woodstoves, road paving, or other programs to reduce PM_{10} emissions. ▪ Participate in the District's Offsite Mitigation Fee Program by paying the equivalent amount of money, to mitigate the net project contribution of PM_{10} that exceeds the 82 lb/day threshold over a single season. As indicated previously, the estimated PM_{10} emissions offset requirement is approximately 36.5 tons/year for Plan Concept 1 and 23.9 tons/year for Plan Concept 2. The estimated mitigation fees for the PM_{10} emissions increase associated with project operations is approximately $220,800 for Plan Concept 1 and $144,600 for Plan Concept 2, based upon an assumed cost-effectiveness rate				

Table 2-4. Summary of Impacts and Mitigation Measures

Impact	Mitigation Measure	Plan Concept 1		Plan Concept 2	
		Significance Before Mitigation	Significance After Mitigation	Significance Before Mitigation	Significance After Mitigation
	of $6,050 per ton used for PM_{10} in the SAP DEIR (Placer County 2018). The actual amount to be paid shall be determined based on the selected program and applicable cost-effectiveness rate agreed to by the WPWMA and PCAPCD and shall be paid by the WPWMA or other responsible parties. ▪ Any combination of the above or other measures, as determined feasible by the WPWMA and PCAPCD.				
Impact 6-4: Mobile-Source Concentrations of Carbon Monoxide. Though buildout of the proposed project would result in additional vehicle trips on the surrounding roadway network, mobile-source emissions of CO associated with the proposed project would not exceed the PCAPCD's screening criterion for CO dispersion modeling. Therefore, the proposed project is not anticipated to cause a localized exceedance of the NAAQS and CAAQS for CO.	None required.	Less than Significant	Less than Significant	Less than Significant	Less than Significant
Impact 6-5: Exposure of Sensitive Receptors to TACs. Estimated net changes in TAC emissions associated with construction and operation of solid waste elements, complementary elements, and supporting elements under the proposed project would not result in the exposure of sensitive receptors to	None required.	Less than Significant	Less than Significant	Less than Significant	Less than Significant

Table 2-4. Summary of Impacts and Mitigation Measures

Impact	Mitigation Measure	Plan Concept 1		Plan Concept 2	
		Significance Before Mitigation	Significance After Mitigation	Significance Before Mitigation	Significance After Mitigation
substantial TAC concentrations. Based on the results of a HRA for project-related emissions, the evaluated exposure conditions at nearby residential, workplace, and sensitive receptor locations would not result in risk values that exceed PCAPCD thresholds of significance at any modeled receptors, including sensitive receptors. Modeled emissions and exposures would not result in an incremental increase in lifetime cancer risk of greater than 10 in 1 million, nor would they result in hazard indices for noncancer chronic (HIC) or acute exposures (HIA) greater than 1.0.					
Impact 6-6: Create Objectionable Odors Affecting a Substantial Number of People. Implementation of the solid waste elements, complementary and programmatic elements, and supporting elements under the proposed project has the potential to create objectionable odors affecting a substantial number of people. The proposed project would implement numerous facility improvements, including more efficient waste management operations and odor-abatement strategies. However, the nature and effectiveness of these	**Mitigation Measure 6-6: Implement odor reduction measures** The following odor reduction measures shall be implemented in addition to the BMPs and project design measures listed in Table 6-1 as mitigation measures for the proposed project: ▪ Conduct Annual Odor Emissions Testing and Implement Response Actions (Tier 1, Composting Operations). ▪ Increase Screening of LFG and Implement Response Actions (Tier 1, Landfill Operations). Quarterly screening for fugitive LFG shall be conducted to identify "hot spots" of LFG emissions through interim and final landfill covers. Such screening reduces the time between identification and repair of surface hot spot emissions, and thus odor. ▪ Enhance LFG Collection (Tier 1, Landfill Operations). To reduce landfill-related odor emissions, the WPWMA shall establish stricter protocols for LFG collection. Because LFG must be used,	Significant Impact	Significant Impact	Significant Impact	Significant Impact

Table 2-4. Summary of Impacts and Mitigation Measures

Impact	Mitigation Measure	Plan Concept 1		Plan Concept 2	
		Significance Before Mitigation	Significance After Mitigation	Significance Before Mitigation	Significance After Mitigation
strategies are unknown, there are no quantifiable thresholds of significance for odor impacts, and there is no existing fee program or other mechanism by which to fund odor mitigation.	flared, or stored in a leak-free container, minimizing odorous emissions involves operating the system for maximum containment of gas as well as cost-effective performance of the gas-to-energy system. ▪ Implement Enhanced Monitoring and Modeling (Tier 1, Site-wide Technologies and Operations). To monitor odor emissions in areas around the WRSL, odor sensors shall be placed in developed areas surrounding the landfill to identify odor spikes or other abnormal odor emissions, ideally before community complaints are lodged. Updates to the WPWMA's dispersion modeling capabilities shall also be implemented to better predict the nature, location, and intensity of odor issues. ▪ Establish Tree-lined Perimeter of WRSL (Tier 1, Site-wide Technologies and Operations). Trees with aromatic foliage, such as pine or eucalyptus, shall be planted and maintained around the WRSL to visually screen the landfill from surrounding areas, providing psychological benefits, and to serve as a windbreak, thereby impeding, absorbing, or otherwise altering the flow of odorous emissions from the facility. ▪ Implement additional measures in accordance with the Odor Mitigation MOU (reference).				
Chapter 7 Biological Resources					
Impact 7-1: Impacts on Special-Status Plant Species Implementation of the proposed project would result in direct removal and potential indirect disturbance of dwarf downingia, a species with a California Rare Plant Rank of 2B.2, and potential habitat for other special-status plant	**Mitigation Measure 7-1: Impacts on Special-Status Plant Species** The WPWMA shall implement the proposed project as a Covered Activity under the PCCP and CARP to compensate for any loss of special-status plants.	Significant Impact	Less than Significant	Significant Impact	Less than Significant

Table 2-4. Summary of Impacts and Mitigation Measures

Impact	Mitigation Measure	Plan Concept 1		Plan Concept 2	
		Significance Before Mitigation	Significance After Mitigation	Significance Before Mitigation	Significance After Mitigation
species. Other special-status plant species may be present adjacent to the project site and could be indirectly affected by habitat removal or modification on the site.					
Impact 7-2: Impacts on Vernal Pool Branchiopods and Western Spadefoot Implementation of the proposed project would result in loss and degradation of habitat for special-status wildlife species that rely on vernal pool-type wetlands for at least a portion of their lifecycle. These species include federally listed vernal pool fairy shrimp and vernal pool tadpole shrimp, as well as western spadefoot, a California species of special concern.	**Mitigation Measure 7-2: Impacts on Vernal Pool Branchiopods and Western Spadefoot** The WPWMA shall implement the proposed project as a Covered Activity under the PCCP and CARP to compensate for loss of vernal pool fairy shrimp and vernal pool tadpole shrimp habitat. Although western spadefoot is not covered under the PCCP, implementation of the PCCP would reduce impacts on western spadefoot because the species requires the protection of vernal pool complex habitat for survival, and this habitat would be protected for vernal pool fairy shrimp and vernal pool tadpole shrimp. The protection of vernal pool complex habitat, and vernal pool branchiopods and western spadefoot by proxy, would be supported by the following conditions from the PCCP (Placer County 2020c) (Appendix D): ▪ General Condition 1, Watershed Hydrology and Water Quality ▪ General Condition 3, Land Conversion ▪ General Condition 4, Temporary Effects ▪ General Condition 5, Conduct Worker Training ▪ Regional Public Projects Condition 3, Operations and Maintenance best management practices (BMPs) ▪ Species Condition 10, Vernal Pool Fairy Shrimp and Vernal Pool Tadpole Shrimp Covered Activities shall be assessed fees based on the parameters described in Chapter 9, Costs and Funding, and as summarized in Tables 9-6 and 9-7 of the PCCP HCP/NCCP (Placer County 2020a).	Significant Impact	Less than Significant	Significant Impact	Less than Significant

Table 2-4. Summary of Impacts and Mitigation Measures

Impact	Mitigation Measure	Plan Concept 1		Plan Concept 2	
		Significance Before Mitigation	Significance After Mitigation	Significance Before Mitigation	Significance After Mitigation
	Special habitat fees (Table 9-7 of the PCCP HCP/NCCP) are variable depending on the special habitat type and would be paid in addition to land conversion fees. In the Central Valley, the fees shall be applied when projects affect natural, semi-natural, and other agricultural communities.				
Impact 7-3: Impacts on Valley Elderberry Longhorn Beetle Implementation of the proposed project could result in loss of elderberry shrubs, the host plant for the federally listed as threatened valley elderberry longhorn beetle, and could result in take of this species.	**Mitigation Measure 7-3: Impacts to Valley Elderberry Longhorn Beetle** Valley elderberry longhorn beetle is a Covered Species under the PCCP. Potential impacts on this species shall be mitigated by implementing the PCCP conservation strategy. The PCCP conservation strategy includes survey and impact minimization and avoidance requirements for Covered Species, other conditions on Covered Activities to achieve conservation goals and objectives for Covered Species and natural communities, establishment of a habitat reserve system, and long-term conservation and management of habitats in the reserve system. The protection and restoration of valley elderberry longhorn beetle habitat within the proposed project area would be supported by the following conditions from the PCCP (Placer County 2020b) (Appendix D): ▪ General Condition 4, Temporary Effects ▪ General Condition 5, Conduct Worker Training ▪ Regional Public Projects Condition 3, Operations and Maintenance BMPs ▪ Species Condition 8, Valley Elderberry Longhorn Beetle	Significant Impact	Less than Significant	Significant Impact	Less than Significant
Impact 7-4: Impacts on Special-Status Bird Species, Including Raptors Implementation of the proposed project would result in direct removal or disturbance of habitat with potential to	**Mitigation Measure 7-4: Impacts on Special-Status Bird Species, Including Raptors** Burrowing owl, Swainson's hawk, and tricolored blackbird are Covered Species under the PCCP. Potential impacts on these species shall be mitigated through implementation of the PCCP	Significant Impact	Less than Significant	Significant Impact	Less than Significant

Table 2-4. Summary of Impacts and Mitigation Measures

Impact	Mitigation Measure	Plan Concept 1		Plan Concept 2	
		Significance Before Mitigation	Significance After Mitigation	Significance Before Mitigation	Significance After Mitigation
support burrowing owl, Swainson's hawk, northern harrier, white-tailed kite, tricolored blackbird, and grasshopper sparrow.	conservation strategy. The PCCP conservation strategy includes survey and impact minimization and avoidance requirements for Covered Species, other conditions on Covered Activities to achieve conservation goals and objectives for Covered Species and natural communities, establishment of a habitat reserve system, and long-term conservation and management of habitats in the reserve system. The protection and restoration of burrowing owl, Swainson's hawk, and tricolored blackbird within the proposed project area would be supported by the following conditions from the PCCP (Placer County 2020b) (Appendix D): ▪ General Condition 1, Watershed Hydrology and Water Quality ▪ General Condition 4, Temporary Effects ▪ General Condition 5, Conduct Worker Training ▪ Regional Public Projects Condition 3, Operation and Maintenance BMPs ▪ Species Condition 3, Western Burrowing Owl ▪ Species Condition 4, Tricolored Blackbird ▪ Species Condition 1, Swainson's Hawk				
Impact 7-5: Impacts on Wetlands or Other Sensitive Natural Communities Implementation of the proposed project would result in the loss of jurisdictional waters of the United States, including wetlands subject to USACE jurisdiction under the federal Clean Water Act (CWA). The proposed project also would result in the loss of a sensitive natural community.	**Mitigation Measure 7-5: Impacts on Wetlands or Other Sensitive Natural Communities** The anticipated permanent impacts to wetlands would be offset through a watershed-based approach as described in the CARP (Placer County, 2020c). Both the HCP/NCCP and CARP require compensatory mitigation for wetland impacts to be implemented at 1.5:1 through payment into an ILF Program or purchase of mitigation credits at an agency-approved mitigation bank, or through land dedications in lieu of fee payments. Most of this mitigation would be achieved through the enhancement	Significant Impact	Less than Significant	Significant Impact	Less than Significant

Table 2-4. Summary of Impacts and Mitigation Measures

Impact	Mitigation Measure	Plan Concept 1		Plan Concept 2	
		Significance Before Mitigation	Significance After Mitigation	Significance Before Mitigation	Significance After Mitigation
	(rehabilitation) of wetlands and waters, and creation (establishment) or restoration (re-establishment) of 2,715 acres of constituent habitats that would be considered protected wetlands and waters (Placer County 2020c). Overall, the proposed wetland mitigation in the CARP would maintain or improve the functions and services of wetlands, including special aquatic sites, within the larger PCCP area. The PCCP includes several objectives and conservation measures to prevent net loss of functions and services within the larger PCCP area. These objectives and measures would allow preserved, enhanced, and established and re-established wetlands and waters to maintain or improve the physical, chemical, and biological processes of wetlands in these landscapes, including nutrient cycling, vegetation structure, plant and animal diversity, habitat for rare or listed species, and habitat linkages and corridors. The services that these wetlands provide would include such benefits as flood control, groundwater recharge, and maintenance of water quality in receiving waters. The protection and restoration of protected wetlands and waters within the proposed project area would be supported by the following conditions from the PCCP (Placer County 2020b) (Appendix D): ▪ General Condition 1, Watershed Hydrology and Water Quality ▪ General Condition 3, Land Conversion ▪ General Condition 4, Temporary Effects ▪ Regional Public Project Condition 3, Operation and Maintenance BMPs The CARP provides additional specific avoidance and minimization measures, summarized in Table 4.2 of that document (Placer County 2020c).				

Table 2-4. Summary of Impacts and Mitigation Measures

Impact	Mitigation Measure	Plan Concept 1		Plan Concept 2	
		Significance Before Mitigation	Significance After Mitigation	Significance Before Mitigation	Significance After Mitigation
	The PCCP objectives, conservation measures, and conditions establish performance standards for measuring the effectiveness of proposed conservation actions. The acres of protection and restoration and the commitment to ratios established in the CARP satisfy the typical mitigation that would be applied to the proposed project impacts, as well as mitigating the effects of the other conservation measures. The proposed conditions further demonstrate the intent to avoid and minimize effects and to maintain or improve wetland and water functions and services over the life of the PCCP. Consistent with SAP Program NR-4, PCCP, and CARP, the WPWMA shall delineate all aquatic resources, implement all feasible avoidance and minimization measures described in the PCCP and CARP, calculate the extent of impacts, and provide compensatory mitigation according to the procedures described in the PCCP and CARP through payment of applicable mitigation fees to the ILF Program or purchase of mitigation credits at an agency-approved mitigation bank. The PCCP allows for consideration of land dedication in lieu of PCCP fees, subject to approval by the future Placer Conservation Authority and concurrence by the state and federal agencies. The fees collected through the ILF Program will be used to fund land acquisition; mitigation projects that protect, enhance, and restore aquatic resources; and long-term management and monitoring in the PCCP Reserve Acquisition Areas.				

Table 2-4. Summary of Impacts and Mitigation Measures

Impact	Mitigation Measure	Plan Concept 1		Plan Concept 2	
		Significance Before Mitigation	Significance After Mitigation	Significance Before Mitigation	Significance After Mitigation
Impact 7-6: Interference with Wildlife Movement Corridors Implementation of the proposed project would not significantly interfere with the movement of native resident wildlife species through the proposed project area.	None required.	Less than Significant	Less than Significant	Less than Significant	Less than Significant
Impact 7-7: Conflicts with Local Ordinances Implementation of the proposed project would result in development in areas containing trees protected under the County Tree Ordinance. Project implementation would result in the removal or degradation of these resources and could conflict with the County Tree Ordinance.	**Mitigation Measure 7-7: Conflicts with Local Ordinances** Actions consistent with the following measure from the SAP shall be implemented so that the proposed project does not conflict with the County Tree Ordinance: ▪ ***SAP Mitigation Measure 4.4-7a: Avoid or compensate for loss of protected trees.*** – The County will require future projects, including for offsite improvements, to avoid tree removal or death if feasible and appropriate, through incorporation of these features into project design and planning. – All trees retained onsite will be protected from construction-related impacts by placing exclusion fencing 1 foot outside the drip line of retained trees, or 1 foot outside the outer edge of the riparian woodland habitat and maintaining said fencing through the duration of construction. – If any trees protected under the County ordinance cannot feasibly be avoided, they will be mitigated through the payment of PCCP land conversion fees and incorporation of its avoidance and minimization measures into the project.	Significant Impact	Less than Significant	Significant Impact	Less than Significant

Table 2-4. Summary of Impacts and Mitigation Measures

Impact	Mitigation Measure	Plan Concept 1		Plan Concept 2	
		Significance Before Mitigation	Significance After Mitigation	Significance Before Mitigation	Significance After Mitigation
Impact 7-8: Conflicts with an Adopted HCP, NCCP, or Other Approved Local, Regional, or State Habitat Conservation Plan The WPWMA will implement the proposed project as a Covered Activity under the approved PCCP, which is the only Habitat Conservation Plan or Natural Community Conservation Plan that has been adopted for the proposed project area. Therefore, the proposed project would not conflict with an adopted HCP, NCCP, or other approved local, regional, or state habitat conservation plan.	None required.	No Impact	No Impact	No Impact	No Impact
Chapter 8 Cultural and Tribal Resources					
Impact 8-1: Disturbance of Historic Resources The Area of Potential Effects does not contain any historic resources that would be considered significant for the purposes of CEQA.	None required.	No Impact	No Impact	No Impact	No Impact
Impact 8-2: Disturbance of Tribal Cultural Resources Discovered during Construction Ground disturbance from project construction activities could disturb,	**Mitigation Measure 8-2: Disturbance of Tribal Cultural Resources Discovered during Construction** If any suspected tribal cultural resources are discovered during ground-disturbing construction activities, work shall cease within 100 feet of the find, or an agreed upon distance based on the project area and nature of the find. A Tribal Representative from the	Significant Impact	Less than Significant	Significant Impact	Less than Significant

Table 2-4. Summary of Impacts and Mitigation Measures

Impact	Mitigation Measure	Plan Concept 1		Plan Concept 2	
		Significance Before Mitigation	Significance After Mitigation	Significance Before Mitigation	Significance After Mitigation
disrupt, or destroy unknown tribal cultural resources.	United Auburn Indian Community of the Auburn Rancheria (UAIC) shall be immediately notified to determine whether the find is a tribal cultural resource (PRC §21074). The Tribal Representative will make recommendations for further evaluation and treatment as necessary. Preservation in place is the preferred alternative under CEQA and UAIC protocols, and every effort shall be made to preserve the resources in place, including through project redesign. Culturally appropriate treatment may include processing materials for reburial, minimizing handling of cultural objects, leaving objects in place within the landscape, or returning objects to a location within the project area where they will not be subject to future impacts. The UAIC does not consider curation of tribal cultural resources to be appropriate or respectful and requests that materials not be permanently curated unless approved by the tribe. The WPWMA's contractors will implement any measures deemed by the WPWMA to be necessary and feasible to preserve in place, avoid, or minimize impacts to the resource, including facilitating the appropriate tribal treatment of the find, as necessary. Treatment that preserves or restores the cultural character and integrity of a tribal cultural resource may include tribal monitoring, culturally appropriate recovery of cultural objects, and reburial of cultural objects or cultural soil. Work at the discovery location cannot resume until the necessary investigation and evaluation of the discovery pursuant to CEQA and AB 52 has been satisfied.				
Impact 8-3: Disturbance of Archaeological Resources Discovered during Construction Ground disturbance from project construction activities could disturb,	**Mitigation Measure 8-3: Disturbance of Archaeological Resources Discovered during Construction** If any prehistoric-era or historic-era archaeological resources are discovered during ground-disturbing activities, work within 100 feet of the resources shall be halted, and a qualified archaeologist will be consulted to assess the significance of the find according to CEQA	Significant Impact	Less than Significant	Significant Impact	Less than Significant

Table 2-4. Summary of Impacts and Mitigation Measures

Impact	Mitigation Measure	Plan Concept 1		Plan Concept 2	
		Significance Before Mitigation	Significance After Mitigation	Significance Before Mitigation	Significance After Mitigation
disrupt, or destroy unknown buried archaeological resources.	Guidelines Section 15064.5. If any find is determined to be significant, the WPWMA and the archaeologist would determine the appropriate avoidance measures or other appropriate mitigation. If the archaeologist determines that the find is potentially a tribal cultural resource (for example, a prehistoric-era archaeological site), the archaeologist shall notify the WPWMA, and the procedures described in Mitigation Measure 8-2 shall be followed. All significant cultural materials recovered shall be, as necessary and at the discretion of the consulting archaeologist, subject to scientific analysis, curation (unless it is a tribal cultural resource), and documentation according to current professional standards. In considering any suggested mitigation proposed by the consulting archaeologist to mitigate impacts to archaeological resources, the WPWMA shall determine whether avoidance is necessary and feasible in light of factors such as the nature of the find, proposed project design, costs, and other considerations. If avoidance is infeasible, other appropriate measures (for example, data recovery) shall be instituted. Work may proceed on other parts of the project site while mitigation for historical or unique archaeological resources is being carried out.				
Impact 8-4: Disturbance of Human Remains Construction and excavation activities associated with project implementation could unearth previously undiscovered human remains.	**Mitigation Measure 8-4: Disturbance of Human Remains** As required by the provisions of California's *Health and Safety Code* Section 7050.5, PRC Section 5097.98, and the *California Code of Regulations* Section 15064.5 (CEQA), if human remains are encountered at the site, work in the immediate vicinity of the discovery shall cease, and necessary steps to secure the integrity of the immediate area shall be taken. The Placer County Coroner shall be notified immediately. The coroner will then determine whether the remains are Native American. If the coroner determines the remains are Native American, the coroner will notify the Native	Significant Impact	Less than Significant	Significant Impact	Less than Significant

Table 2-4. Summary of Impacts and Mitigation Measures

Impact	Mitigation Measure	Plan Concept 1		Plan Concept 2	
		Significance Before Mitigation	Significance After Mitigation	Significance Before Mitigation	Significance After Mitigation
	American Heritage Commission (NAHC) within 24 hours, who will, in turn, notify the person the NAHC identifies as the most likely descendant (MLD) of any human remains. Further actions will be determined, in part, by the desires of the MLD. The MLD has 48 hours to make recommendations regarding the disposition of the remains following notification from the NAHC of the discovery. If the MLD does not make recommendations within 48 hours, the WPWMA shall, with appropriate dignity, reinter the remains in an area of the property secure from further disturbance. Alternatively, if the WPWMA does not accept the MLD's recommendations, the WPWMA or the MLD may request mediation by the NAHC.				
Chapter 9 Geology, Soils, and Paleontological Resources					
Impact 9-1: Risks Related to Seismic Activity The proposed project is not expected to directly or indirectly cause potential substantial adverse effects associated with earthquake faults, strong seismic shaking, liquefaction, or landslides.	None required.	Less than Significant	Less than Significant	Less than Significant	Less than Significant
Impact 9-2: Potential for Soil Loss or Erosion The proposed project is not anticipated to cause substantial soil erosion or the loss of topsoil, because of the implementation of best management practices to control erosion.	None required.	Less than Significant	Less than Significant	Less than Significant	Less than Significant

Table 2-4. Summary of Impacts and Mitigation Measures

Impact	Mitigation Measure	Plan Concept 1		Plan Concept 2	
		Significance Before Mitigation	Significance After Mitigation	Significance Before Mitigation	Significance After Mitigation
Impact 9-3: Potential for Unstable Soils The project site is not located on a geologic unit or soil that is unstable, and the project elements would not be expected to experience unstable soil conditions.	None required.	Less than Significant	Less than Significant	Less than Significant	Less than Significant
Impact 9-4: Presence of Expansive Soils The presence of expansive soils on the site could expose building foundations to damage caused by soil expansion and contraction, which can create risks to life and property.	**Mitigation Measure 9-4: Presence of Expansive Soils** Consistent with *California Building Standards Code* Section 1808.2 and Placer County General Plan Policy 8.A.1, the WPWMA shall conduct a geotechnical investigation prior to constructing any buildings or other structures designed for human occupancy that may be exposed to expansive soils. The geotechnical report shall be prepared by a qualified and licensed civil engineer, geotechnical engineer, or certified engineering geologist. During project construction, all recommendations outlined in the geotechnical report shall be implemented, subject to revision by the civil or geotechnical engineer or engineering geologist where needed, and verified by a construction quality assurance observer. Typical recommendations could include over-excavating the foundations, reinforcing the foundations, and using fill soil to minimize the exposure of the foundations to the effects of the expansive soils.	Significant Impact	Less than Significant	Significant Impact	Less than Significant
Impact 9-5: Potential Destruction of Paleontological Resources Fossils are known to occur in the project vicinity, and ground disturbance from project construction activities could	**Mitigation Measure 9-5: Potential Destruction of Paleontological Resources** If evidence of any paleontological features or deposits are discovered during construction-related earth-moving activities (for example, vertebrate, invertebrate, or plant fossils, traces, or trackways), the WPWMA shall halt ground-disturbing activity in the area of the discovery and retain a qualified paleontologist to assess	Significant Impact	Less than Significant	Significant Impact	Less than Significant

Table 2-4. Summary of Impacts and Mitigation Measures

Impact	Mitigation Measure	Plan Concept 1		Plan Concept 2	
		Significance Before Mitigation	Significance After Mitigation	Significance Before Mitigation	Significance After Mitigation
disturb or destroy paleontological resources.	the significance of the find. If the paleontologist determines that the find does not constitute a significant or unique resource, construction may proceed. If the paleontologist determines that further information is needed to evaluate significance, a data recovery plan shall be prepared. If the find is determined to be significant by the qualified paleontologist, they shall work with the WPWMA to avoid disturbance to the resources. If complete avoidance is not feasible in light of project design, economics, logistics, or other factors, accepted professional standards for documentation of any find and recovery of important fossils shall be followed.				
Chapter 10 Greenhouse Gas Emissions and Climate Change					
Impact 10-1: Construction and Operational GHG Emissions Annual greenhouse gas (GHG) emissions estimated for the development and implementation of solid waste elements, complementary elements, and supporting elements under the proposed project would exceed Placer County Air Pollution Control District's (PCAPCD's) recommended GHG significance thresholds, including the bright-line threshold of 10,000 metric tons (MT) of carbon dioxide equivalent per year	**Mitigation Measure 10-1: Fund GHG Emissions Reductions through an Offsite Mitigation Fee Program** WPWMA and their operation contractor(s) shall document their capability and commitment to implement the GHG BMPs and project design measures[11] identified in Table 10-1 as part of their contracts and plan submittals. To further mitigate the significant GHG impacts identified for the proposed project, WPWMA shall participate in one of the following voluntary offsite mitigation programs: ▪ Establish and fund an offsite mitigation project to result in a GHG emission reduction equivalent to the total amount of emissions estimated to exceed the PCAPCD significance threshold over a single year. Developing an offsite mitigation program in western Placer County shall be coordinated with	Significant Impact	Significant and Unavoidable	Significant Impact	Significant and Unavoidable

[11] Note: Applicable measures from PCAPCD's recommended GHG emission mitigation measures (PCAPCD 2017) are incorporated in the proposed project as project design measures. For the list of BMPs and project design measures incorporated in the proposed project, please see the list of measures in Table 10-1, Current Emission Reduction Measures and Best Management Practices Incorporated as Project Design Measures.

Table 2-4. Summary of Impacts and Mitigation Measures

Impact	Mitigation Measure	Plan Concept 1		Plan Concept 2	
		Significance Before Mitigation	Significance After Mitigation	Significance Before Mitigation	Significance After Mitigation
(CO_2e/year) for the construction and operational phases of land-use projects. GHG emissions from construction alone would not exceed PCAPCD's recommended bright-line threshold of 10,000 MT CO_2e/year, but estimated operational GHG emissions increases would exceed the threshold. Exceedance of the PCAPCD threshold of 10,000 MT CO_2e/year indicates that GHG emissions associated with the proposed project would result in a cumulatively considerable contribution to global climate change.	PCAPCD. Emission reductions achieved through the offsite mitigation program must be real and quantifiable, as verified by PCAPCD. ▪ Participate in PCAPCD's Offsite Mitigation Fee Program by paying the equivalent amount of money to mitigate the net annual project contribution of GHG that exceeds the PCAPCD threshold. The actual amount to be paid shall be determined according to the selected program and applicable cost-effectiveness rate agreed to by WPWMA and PCAPCD. (Please note that there is currently no mitigation fee option for GHG offsite mitigation, because there is no fee rate or cost-effectiveness factor established by a statewide incentive program.) ▪ Any combination of these or other measures, as determined feasible by WPWMA and PCAPCD. If an offsite mitigation measure is required for a land-use project, that mitigation measure shall explicitly identify the required GHG emissions reduction and the implementation method. PCAPCD's Board of Directors adopted the Review of Land Use Projects under CEQA Policy in 2016, which outlines the principles on how the GHG offsite mitigation measures should be implemented, by the selected mitigation scenarios, to offset the land-use project's related operational GHG emissions. The project applicant has two options to implement offsite mitigation measures for GHG emissions: (1) proposing their own offsite mitigation project or (2) purchasing carbon credits from recognized carbon credit registries. When offsite mitigation is an option used to mitigate the project's operational impacts, additional (surplus) emission reductions achieved from offsite sources should be equal to the emission reductions required to mitigate the land-use project's onsite				

Table 2-4. Summary of Impacts and Mitigation Measures

Impact	Mitigation Measure	Plan Concept 1		Plan Concept 2	
		Significance Before Mitigation	Significance After Mitigation	Significance Before Mitigation	Significance After Mitigation
	impacts. This can provide the proper nexus for GHG emission mitigation under CEQA. For example, excessive GHG emissions from a land-use project's energy usage could be reduced by a project that would generate the same amount of surplus GHG emission reductions by renewable energy. Prior to implementation of an offsite mitigation project, the applicant shall consult with PCAPCD and demonstrate that the project meets all conditions required by a selected carbon credit protocol approved by California Air Pollution Control Officers Association (CAPCOA), CARB, or other similar entities determined acceptable by PCAPCD. If the applicant chooses to purchase carbon credits, the credits should be registered under the CAPCOA GHG Reduction Exchange Program, American Carbon Registry, Climate Action Reserve, or other similar carbon credit registry as determined acceptable by PCAPCD. This requirement means that the proposed mitigation project or carbon credit purchase can result in an equivalent GHG reduction required by the offsite mitigation measure. In addition, PCAPCD encourages the applicant to consider generating or purchasing local and California-only carbon credits as the preferred mechanism for implementing the GHG offsite mitigation measure, which helps direct the state toward achieving the GHG emission reduction goal. The following are well-recognized entities with approved carbon offset protocols or registered carbon credits that can be applied toward a land-use project's GHG emission reductions: ▪ CAPCOA GHG Reduction Exchange Program (GHG Rx) ▪ CARB Compliance Offset Protocols ▪ Verified Carbon Standard (Verra) ▪ American Carbon Registry ▪ Climate Action Registry				

Table 2-4. Summary of Impacts and Mitigation Measures

Impact	Mitigation Measure	Plan Concept 1		Plan Concept 2	
		Significance Before Mitigation	Significance After Mitigation	Significance Before Mitigation	Significance After Mitigation
	PCAPCD notes that it will not be involved with any carbon credit purchase agreements; PCAPCD is only assisting the lead agency with verification of the carbon credits to confirm they are real, permanent, quantifiable, verifiable, enforceable, and additional.				
Impact 10-2: Consistency with Applicable Plans, Policies, or Regulations Adopted to Reduce GHG Emissions The construction and operation of the solid waste elements, complementary and programmatic elements, and supporting elements under the proposed project would implement and accommodate compliance with goals and directives in applicable plans, policies, and regulations to reduce GHG emissions.	None required.	Less than Significant	Less than Significant	Less than Significant	Less than Significant
Chapter 11 Hazards, Hazardous Materials, and Wildfire					
Impact 11-1: Potential for Construction Activities to Expose the Public or the Environment to Hazardous Materials Construction of the proposed project may involve routine transport, use, and disposal of hazardous materials including fuels and petroleum-based fluids. Additionally, construction activities may result in exposure to	**Mitigation Measure 11-1: Potential for Construction Activities to Expose the Public or the Environment to Hazardous Materials** A Phase I ESA shall be prepared prior to the construction of any facilities on the western or eastern properties in general conformance with the ASTM E 1527-13 "Standard Practice for Environmental Site Assessments" and U.S. Environmental Protection Agency "Standards and Practices for All Appropriate Inquires," 40 CFR Part 312. If existing hazardous materials contamination is identified in the Phase I ESA, and the Phase I ESA recommends further review, the WPWMA shall retain a Registered Environmental Assessor or other qualified professional to conduct follow-up	Significant Impact	Less than Significant	Significant Impact	Less than Significant

Table 2-4. Summary of Impacts and Mitigation Measures

Impact	Mitigation Measure	Plan Concept 1		Plan Concept 2	
		Significance Before Mitigation	Significance After Mitigation	Significance Before Mitigation	Significance After Mitigation
contaminated soils during excavation activities.	sampling to characterize the contamination and to identify any required remediation that shall be conducted. Any remediation recommendations shall be implemented before earth disturbance in the vicinity of the contamination. In addition, a construction hazardous materials management plan shall be prepared by the WPWMA or the WPWMA's construction-manager/contractor for all future development projects on the western and eastern properties and shall be incorporated into the construction and contract specifications for each project. The management plan shall include measures to reduce potential hazards to workers, the public, and the environment associated with use of hazardous materials and exposure to potentially contaminated soil during project construction. The management plan shall include provisions managing impacted materials, sampling and analytical requirements and disposal procedures. Specifically, the construction hazardous materials management plan shall: ▪ Describe the necessary actions to be taken if evidence of contaminated soil or groundwater is encountered during construction. ▪ Describe the types of evidence that could indicate potential hazardous materials contamination, such as soil discoloration, petroleum or chemical odors, or buried building materials. ▪ Include measures to protect worker safety if signs of contamination are encountered. ▪ Identify sampling and analysis protocols for various substances that might be encountered. ▪ List required regulatory agency contacts if contamination is found.				

Table 2-4. Summary of Impacts and Mitigation Measures

Impact	Mitigation Measure	Plan Concept 1		Plan Concept 2	
		Significance Before Mitigation	Significance After Mitigation	Significance Before Mitigation	Significance After Mitigation
	▪ Include recommendations on soil management in the event that aerially deposited lead is discovered in existing road right-of-way. ▪ Identify legal and regulatory processes and thresholds for cleanup of contamination. ▪ Include provisions for delineation, removal, and disposal of any contaminants identified as exceeding human health risk levels. ▪ Require that the project contractor verify that suspect soils are isolated, protected from runoff, and disposed of in accordance with Section 31303 of the *California Vehicle Code* and the requirements of the licensed receiving facility.				
Impact 11-2: Potential for Solid Waste Operating Activities to Release Hazardous Materials into the Environment The proposed project involves the increased delivery of waste materials to the site and the potential for hazardous waste to be illegally or accidentally delivered to the site in loads of municipal solid waste. Growth in the HHW stream would also be expected to result in greater quantities of HHW being processed at and stored on the site. The proposed project would continue implementation of the existing load-checking program, waste acceptance procedures, and compliance with the solid waste permitting requirements.	None required.	Less than Significant	Less than Significant	Less than Significant	Less than Significant

Table 2-4. Summary of Impacts and Mitigation Measures

Impact	Mitigation Measure	Plan Concept 1		Plan Concept 2	
		Significance Before Mitigation	Significance After Mitigation	Significance Before Mitigation	Significance After Mitigation
Impact 11-3: Potential for Landfill Gas to Accumulate in Occupied Structures The proposed project may result in migrating LFG intrusion within 1,000 feet of the landfill.	**Mitigation Measure 11-3: Potential for Landfill Gas to Accumulate in Occupied Structures** For any structure sited within 1,000 feet of the WRSL within the project's boundary, the following measures specified in *California Code of Regulations* (CCR) Title 27 Section 21190(g) shall be included: ▪ A geomembrane or equivalent system with low permeability to landfill gas shall be installed between the concrete floor slab of the building and subgrade. ▪ A permeable layer of open graded material of clean aggregate with a minimum thickness of 12 inches shall be installed between the geomembrane and the subgrade or slab. ▪ A geotextile filter shall be used to prevent the introduction of fines into the permeable layer. ▪ Perforated venting pipes shall be installed within the permeable layer, and shall be designed to operate without clogging. ▪ The venting pipe shall be constructed with the ability to be connected to an induced draft exhaust system. ▪ Automatic methane gas sensors shall be installed within the permeable gas layer, and inside the building to trigger an audible alarm when methane gas concentrations are detected. In addition, the WPWMA shall use a qualified specialist to conduct periodic methane gas monitoring (pursuant to CCR Section 20920 et. seq.) inside all buildings and underground utilities.	Significant Impact	Less than Significant	Significant Impact	Less than Significant
Impact 11-4: Potential for Waste Relocation Activities to Release Hazardous Materials into the Environment	**Mitigation Measure 11-4: Potential for Waste Relocation Activities to Release Hazardous Materials into the Environment** Prior to commencing waste relocation activities, the WPWMA shall develop and implement a contingency plan in case hazardous	Significant Impact	Less than Significant	Significant Impact	Less than Significant

Table 2-4. Summary of Impacts and Mitigation Measures

Impact	Mitigation Measure	Plan Concept 1		Plan Concept 2	
		Significance Before Mitigation	Significance After Mitigation	Significance Before Mitigation	Significance After Mitigation
The waste excavation and relocation component of the proposed project has the potential to expose onsite personnel or the environment to hazardous materials.	wastes are encountered during waste relocation. The contingency plan shall be based on guidelines issued by the State of California Governor's Office of Emergency Services (CA OES 2001) for preparation of a Hazardous Material Incident Contingency Plan that describes emergency procedures and actions to be implemented to minimize hazards and release hazardous materials.				
Impact 11-5: Potential Conflict with an Adopted Emergency Response Plan The proposed project is not expected to conflict with implementation of an adopted emergency response plan. However, construction activities on local roadways may require temporary lane closures that could delay emergency evacuation.	**Mitigation Measure 11-5: Potential Conflict with an Adopted Emergency Response Plan** Before construction activities commence, the WPWMA shall prepare a Construction Traffic Management Plan to minimize traffic impacts on all roadways at and near the work site affected by construction activities. The plan shall identify construction and public (if applicable) access points, procedures for notification of lane closures, a construction materials delivery plan, and a description of emergency personnel access routes during lane closures. This plan shall include measures that provide adequate access for emergency evacuation, including maintaining bypass lanes around any roadway construction sites.	Significant Impact	Less than Significant	Significant Impact	Less than Significant
Impact 11-6: Risk of Wildfire The proposed project is not located in an area of substantial wildfire risks or hazards and would not be expected to increase risks associated with wildfire. The expanded solid waste operations would include specific operational procedures that would minimize the potential for wildland fires to be started on the site. Also, the compatible/programmatic uses would	None required.	Less than Significant	Less than Significant	Less than Significant	Less than Significant

Table 2-4. Summary of Impacts and Mitigation Measures

Impact	Mitigation Measure	Plan Concept 1		Plan Concept 2	
		Significance Before Mitigation	Significance After Mitigation	Significance Before Mitigation	Significance After Mitigation
be subject to applicable regulations that would minimize wildfire risks.					
Impact 11-7: Risk of Vectors The proposed project operations have the potential to attract vectors, particularly mosquitoes within areas of standing water, which can increase exposure of the public to vector-borne diseases.	**Mitigation Measure 11-7: Risk of Vectors** During construction, all grading shall be performed by contractors in a manner to prevent the occurrence of standing water or other areas suitable for breeding of mosquitoes and other vectors. The Placer Mosquito and Vector Control District shall be granted access to perform vector control both during construction and operation of the proposed project. This includes ongoing access to all common areas including drainages. As part of the access agreement with Placer Mosquito and Vector Control District, the WPWMA shall require that the district use appropriate vector control methods in biologically sensitive areas to minimize any potential adverse effects to sensitive wildlife and plant species or their habitat.	Significant Impact	Less than Significant	Significant Impact	Less than Significant
Chapter 12 Hydrology and Water Quality					
Impact 12-1: Potential for Solid Waste Project Elements to Violate Water Quality Standards or Substantially Degrade Surface Water Quality The project-level solid waste management operations have the potential to violate water quality standards or waste discharge requirements (WDRs) or otherwise substantially degrade surface water quality. This project will be required to comply with applicable laws and regulations, including amendment of	None required.	Less than Significant	Less than Significant	Less than Significant	Less than Significant

Table 2-4. Summary of Impacts and Mitigation Measures

Impact	Mitigation Measure	Plan Concept 1		Plan Concept 2	
		Significance Before Mitigation	Significance After Mitigation	Significance Before Mitigation	Significance After Mitigation
the existing Stormwater Pollution Prevention Plan (SWPPP).					
Impact 12-2: Potential for Solid Waste Project Elements to Violate Waste Discharge Requirements or Substantially Degrade Ground Water Quality The project-level solid waste management operations have the potential to violate water quality standards or WDRs or otherwise substantially degrade groundwater quality. However, the project is required to comply with applicable laws and regulations, including project WDRs, and the project involves removal of waste from unlined cells to lined cells.	None required.	Less than Significant	Less than Significant	Less than Significant	Less than Significant
Impact 12-3: Potential for Waste Excavation and Relocation to Degrade Surface Water or Groundwater Quality The excavation and relocation of previously buried waste would eliminate a long-term source of groundwater contamination. However, during waste excavation and relocation activities, the excavated waste would be exposed to water and wind erosion, which could degrade surface water quality. In addition, the percolation of water	**Mitigation Measure 12-3: Potential for Waste Excavation and Relocation to Degrade Surface Water or Groundwater Quality** ▪ To implement the state and local regulatory policies intended to address the potential for violating water quality standards or WDRs, or otherwise substantially degrading surface or ground water quality, the WPWMA shall Amend the existing project SWPPP for the waste excavation and relocation component of the project. The SWPPP may include the following BMPs: – Where excavation and removal occurs over a unlined area, the project will implement secondary containment in the direct path of hauling and removal.	Significant Impact	Less than Significant	Significant Impact	Less than Significant

Table 2-4. Summary of Impacts and Mitigation Measures

Impact	Mitigation Measure	Plan Concept 1		Plan Concept 2	
		Significance Before Mitigation	Significance After Mitigation	Significance Before Mitigation	Significance After Mitigation
through the exposed waste could degrade groundwater quality.	– The project shall avoid excavation and relocation of waste between October 15 and April 30 unless such activities are adequately mitigated to avoid impacts during the rainy season. – If excavation and relocation of waste activities cannot be avoided during this period, the WPWMA shall implement use of tarps or soil cover over the exposed face overnight and when the activity will not occur for more than 24 hours. The SWPPP shall be prepared and implemented prior to ground-disturbing activities commencing for the waste excavation and relocation component of the proposed project.				
Impact 12-4: Potential for Programmatic Elements to Degrade Water Quality The complementary and programmatic elements have the potential to violate water quality standards or WDRs or otherwise substantially degrade surface or ground water quality. Site-specific SWPPPs would be prepared for these project elements.	None required.	Less than Significant	Less than Significant	Less than Significant	Less than Significant
Impact 12-5: Potential to Decrease Groundwater Supplies or Interfere with Groundwater Recharge The project does not propose to increase the use of groundwater supplies for the waste management operations or the complementary and programmatic elements. Also, the project site is not located within a	None required.	Less than Significant	Less than Significant	Less than Significant	Less than Significant

Table 2-4. Summary of Impacts and Mitigation Measures

Impact	Mitigation Measure	Plan Concept 1		Plan Concept 2	
		Significance Before Mitigation	Significance After Mitigation	Significance Before Mitigation	Significance After Mitigation
groundwater recharge area and would not be expected to substantially interfere with groundwater recharge.					
Impact 12-6: Potential to Increase Runoff and Localized or Downstream Flooding Implementation of the proposed project would result in an increase in impervious surfaces on the project site and altered drainage patterns, which would lead to an increase in stormwater runoff compared with existing conditions. The project site is not located within a 100-year floodplain or designated flood hazard zone. Also, the proposed project's stormwater collection system would be designed to capture and retain project-related increases in peak stormwater discharge on the project site.	None required.	Less than Significant	Less than Significant	Less than Significant	Less than Significant
Impact 12-7: Potential Conflicts with Applicable Water Quality Control Plan The project would implement all applicable laws and regulations.	None required.	Less than Significant	Less than Significant	Less than Significant	Less than Significant
Impact 12-8: Potential for Waste Excavation and Relocation to Conflict with or Obstruct Implementation of a Water Quality Control Plan	None required.	Less than Significant	Less than Significant	Less than Significant	Less than Significant

Table 2-4. Summary of Impacts and Mitigation Measures

Impact	Mitigation Measure	Plan Concept 1		Plan Concept 2	
		Significance Before Mitigation	Significance After Mitigation	Significance Before Mitigation	Significance After Mitigation
The proposed project would maintain and expand coverage under the existing IGP SWPPP for the waste excavation and relocation activities.					
Chapter 13 Land Use and Planning					
Impact 13-1: Physically Divide an Established Community The proposed project is located on WPWMA-owned land designated for Public/Quasi-Public uses. The project site is located within a rural area and would not physically divide an established community.	None required.	No Impact	No Impact	No Impact	No Impact
Impact 13-2: Consistency with Land-Use Plans and Policies The proposed project is consistent with the site's land use and zoning designations, as identified in the SAP. The proposed project would not conflict with the goals and policies included in the SAP that have been adopted for the purpose of avoiding or mitigating an environmental effect.	None required.	No Impact	No Impact	No Impact	No Impact

Table 2-4. Summary of Impacts and Mitigation Measures

Impact	Mitigation Measure	Plan Concept 1		Plan Concept 2	
		Significance Before Mitigation	Significance After Mitigation	Significance Before Mitigation	Significance After Mitigation
Chapter 14 Noise					
Impact 14-1: Construction Activity Noise Impacts Construction activities would result in temporary increases in ambient noise levels within the project vicinity. As specified in the Placer County Noise Ordinance, construction noise impacts that occur during acceptable hours are exempt from the Ordinance's noise level limits.	None required.	Less than Significant	Less than Significant	Less than Significant	Less than Significant
Impact 14-2: Increase in Operational Noise Levels The expansion of the waste management operations would not be expected to generate noise levels above the established noise threshold. However, the development of the complementary and programmatic elements could include manufacturing or industrial uses that would exceed the established noise threshold.	**Mitigation Measure 14-2: Increase in Operational Noise Levels** The WPWMA shall conduct an acoustical evaluation of any facility proposed as part of the complementary and programmatic elements prior to issuance of building permits. The acoustical evaluation shall document that either the proposed uses will not generate noise levels greater than 5 dB above the existing ambient noise level generated from industrial facilities at the site or will be redesigned such that this threshold is not exceeded at existing receiving property boundaries.	Significant	Less than Significant	Significant	Less than Significant
Impact 14-3: Exposure of Sensitive Uses to Vibrations The vibration levels generated by the construction and operation of the proposed solid waste management elements and the complementary and	None required.	Less than Significant	Less than Significant	Less than Significant	Less than Significant

Table 2-4. Summary of Impacts and Mitigation Measures

Impact	Mitigation Measure	Plan Concept 1		Plan Concept 2	
		Significance Before Mitigation	Significance After Mitigation	Significance Before Mitigation	Significance After Mitigation
programmatic project elements would not expose residences within the project vicinity to excessive vibration levels.					
Impact 14-4: Traffic-Generated Permanent Increases in Ambient Noise Levels The proposed project would not result in a noticeable increase in traffic noise levels at offsite sensitive receptors.	None required.	Less than Significant	Less than Significant	Less than Significant	Less than Significant
Chapter 15 Public Services					
Impact 15-1: Require New or Expanded Fire Protection Facilities The proposed project would be expected to increase demand for fire protection services. However, the WPWMA has a funding mechanism in place with Placer County to address additional fire protection services, and the SAP EIR includes the provision for new or expanded fire protection facilities.	None required.	No Impact	No Impact	No Impact	No Impact
Impact 15-2: Require New or Expanded Law Enforcement Facilities The proposed project would be expected to increase demands for law enforcement services. The incremental demand increase as a result of expanded solid waste management	None required.	No Impact	No Impact	No Impact	No Impact

Table 2-4. Summary of Impacts and Mitigation Measures

Impact	Mitigation Measure	Plan Concept 1		Plan Concept 2	
		Significance Before Mitigation	Significance After Mitigation	Significance Before Mitigation	Significance After Mitigation
operations is not expected to result in the need for additional law enforcement facilities. The development of complementary and programmatic elements will contribute to the need for additional law enforcement facilities, which have been planned under the Placer Vineyards Specific Plan.					
Impact 15-3: Require New or Expanded Schools and Parks The proposed project would not be expected to increase demands for schools and parks to such an extent that new or expanded schools and parks would be required beyond what has been accounted for in the SAP EIR.	None required.	Less than Significant	Less than Significant	Less than Significant	Less than Significant
Impact 15-4: Require New or Expanded Roadway Maintenance Although the proposed project would not require new roadways, it would be expected to increase the need for maintenance of local roadways. The WPWMA has a mechanism in place with Placer County to provide funding for road maintenance and improvements on Athens Avenue that would remain in place for the proposed project.	None required.	Less than Significant	Less than Significant	Less than Significant	Less than Significant

Table 2-4. Summary of Impacts and Mitigation Measures

Impact	Mitigation Measure	Plan Concept 1		Plan Concept 2	
		Significance Before Mitigation	Significance After Mitigation	Significance Before Mitigation	Significance After Mitigation
Chapter 16 Transportation					
Impact 16-1: Conflict with Traffic Circulation Plan or Program The proposed project would increase traffic volumes on study roadway segments in Placer County. However, this increase in traffic volumes would not exceed the capacities of the affected roadways. Also, the proposed project does not include any changes to the roadway network that would affect alternative modes of transportation. Therefore, the proposed project would not conflict with any program, plan, ordinance, or policy addressing the circulation system.	None required.	Less than Significant	Less than Significant	Less than Significant	Less than Significant
Impact 16-2: Increase in Vehicle Miles Traveled The implementation of the proposed project would result in new daily vehicle travel, which would result in a net increase in vehicle miles traveled (VMT). This increase in VMT would exceed the identified significance threshold.	**Mitigation Measure 16-2: Increase in Vehicle Miles Traveled** Prior to the initiation of project construction activities, the WPWMA shall prepare a Transportation Demand Management Plan to minimize the increase in VMT. The Transportation Demand Management Plan shall include specific measures intended to reduce employee vehicle trips, such as carpool and ride-share incentive strategies.	Significant and Unavoidable	Significant and Unavoidable	Significant and Unavoidable	Significant and Unavoidable
Impact 16-3: Increase in Vehicle Hazards The proposed project does not include roadway design changes and would not	None required.	Less than Significant	Less than Significant	Less than Significant	Less than Significant

Table 2-4. Summary of Impacts and Mitigation Measures

Impact	Mitigation Measure	Plan Concept 1		Plan Concept 2	
		Significance Before Mitigation	Significance After Mitigation	Significance Before Mitigation	Significance After Mitigation
substantially increase hazards for vehicles as a result of a geometric design feature or incompatible uses. During the installation of utility upgrades within local roadways and site access improvements, temporary lane closures would be necessary to accommodate construction activities. However, these roadway construction activities would include the implementation of standard construction traffic management procedures that would minimize potential temporary traffic hazards. In addition, during site operations, the improvements to the site entrance would be expected to minimize potential vehicle conflicts associated with vehicles backing up on Athens Avenue.					
Impact 16-4: Inadequate Emergency Vehicle Access The proposed project would not result in inadequate emergency vehicle access to or around the project site. The project site can be accessed from multiple directions along local roadways. Also, the proposed project includes upgrading existing site access locations and installing new site access	None required.	Less than Significant	Less than Significant	Less than Significant	Less than Significant

Table 2-4. Summary of Impacts and Mitigation Measures

Impact	Mitigation Measure	Plan Concept 1		Plan Concept 2	
		Significance Before Mitigation	Significance After Mitigation	Significance Before Mitigation	Significance After Mitigation
locations to accommodate the site improvements.					
Chapter 17 Utilities and Service Systems and Energy					
Impact 17-1: Require the Construction or Relocation of Utility Facilities Project implementation would require a new fire protection water line and wastewater line extending to the western property. However, these new lines would be located within existing roadways and previously disturbed onsite areas that would be repaved or otherwise buried and returned to existing conditions after installation. No relocation of infrastructure for telecommunications or electricity would be required. Project implementation would also require the relocation of composting and public waste drop-off operations; however, the facilities would be relocated within the WPWMA property boundary.	None required.	Less than Significant	Less than Significant	Less than Significant	Less than Significant
Impact 17-2: Have Sufficient Water Supplies The proposed project would result in increased potable and nonpotable water demand during both construction and operations. However, these increases were evaluated under the SAP	None required.	Less than Significant	Less than Significant	Less than Significant	Less than Significant

Table 2-4. Summary of Impacts and Mitigation Measures

Impact	Mitigation Measure	Plan Concept 1		Plan Concept 2	
		Significance Before Mitigation	Significance After Mitigation	Significance Before Mitigation	Significance After Mitigation
WSA and the Placer County Water Agency Urban Water Management Plan (UWMP), and both analyses concluded that Placer County Water Agency has sufficient water rights, contracts, and entitlements to supply the service area during normal, single dry, and multiple dry water years at full SAP buildout.					
Impact 17-3: Have Adequate Wastewater Treatment Capacity Wastewater generated by the proposed project would be treated at Pleasant Grove Wastewater Treatment Plant (WWTP) where an expansion in treatment capacity from 9.5 million gallons per day (mgd) to 12 mgd is currently underway. The WWTP would have adequate capacity to treat the increase in wastewater.	None required.	Less than Significant	Less than Significant	Less than Significant	Less than Significant
Impact 17-4: Generate Solid Waste in Excess of Standards or Infrastructure Capacity or Impair the Attainment of Solid Waste Reduction Goals Waste generated during both construction and operations of the proposed project would be minimal and disposed of in compliance with state and local standards. Implementation of the proposed project would increase	None required.	Less than Significant	Less than Significant	Less than Significant	Less than Significant

Table 2-4. Summary of Impacts and Mitigation Measures

Impact	Mitigation Measure	Plan Concept 1		Plan Concept 2	
		Significance Before Mitigation	Significance After Mitigation	Significance Before Mitigation	Significance After Mitigation
local infrastructure and support the attainment of solid waste reduction goals.					
Impact 17-5: Comply with Solid Waste Reduction Statutes and Regulations Implementation of the proposed project would both comply with and support solid waste reduction measures.	None required.	No Impact	No Impact	No Impact	No Impact
Impact 17-6: Result in Wasteful, Inefficient, or Unnecessary Consumption of Energy Resources The proposed project will result in increased consumption of energy resources; however, increased energy use is necessary to provide expanded solid waste services to accommodate regional growth and changing regulatory climate.	None required.	Less than Significant	Less than Significant	Less than Significant	Less than Significant
Impact 17-7: Conflict with a State or Local Plan for Renewable Energy or Energy Efficiency Implementation of the proposed project would support state and local plans regarding renewable energy and energy efficiency.	None required.	No Impact	No Impact	No Impact	No Impact

2.5 Cumulative Impacts

This EIR uses the tiering concept and is hereby incorporating by reference the information included in the SAP EIR, in accordance with CEQA Guidelines Section 15150. An EIR may incorporate by reference all or portions parts of another document that is a matter of public record or is generally available to the public (CEQA Guidelines Section 15150). This EIR tiers off the analysis included in the SAP EIR for the cumulative impact analysis.

2.5.1 Aesthetics

The proposed project would not create new cumulatively considerable aesthetic resource impacts that were not considered in the SAP EIR. Therefore, cumulative aesthetic resource impacts have been adequately addressed in the SAP EIR, and no additional discussion of cumulative impacts beyond what was included in the SAP EIR is warranted.

2.5.2 Air Quality

Construction Emissions of Criteria Air Pollutants and Ozone Precursors: The proposed project's contributions to the nonattainment status of Placer County and the SVAB with respect to the NAAQS and CAAQS would be cumulatively considerable. Because no mitigation is available beyond that recommended for the project, the cumulative impact for project-specific construction emissions would be significant and unavoidable. This finding for the proposed project is consistent with the findings of the SAP EIR, which determined that project construction emissions would be cumulatively considerable, and the cumulative impact would be significant and unavoidable.

Operational Emissions of Criteria Air Pollutants and Ozone Precursors: The proposed project's contributions to the nonattainment status of Placer County and the SVAB with respect to the NAAQS and CAAQS would be cumulatively considerable. Because no mitigation is available beyond that recommended for the project, the cumulative impact for project-specific operational emissions would be significant and unavoidable. This finding for the proposed project is consistent with the findings of the SAP EIR, which determined that the project's contribution of pollutants that exceed the CAAQS and NAAQS would be cumulatively considerable, and the cumulative impact would be significant and unavoidable.

Mobile-Source Concentrations of Carbon Monoxide: The proposed project would not create new cumulatively considerable carbon monoxide impacts that were not considered in the SAP EIR. Therefore, cumulative air quality impacts for mobile-source concentrations of carbon monoxide have been adequately addressed in the SAP EIR, and no additional discussion of cumulative impacts beyond what was included in the SAP EIR is warranted.

Exposure of Sensitive Receptors to Toxic Air Contaminants (TACs): The SAP EIR concluded that development of the SAP and other cumulative projects would result in significant and unavoidable exposure of sensitive receptors to TACs. While emission reduction approaches and technologies would be implemented by the WPWMA as part of the Renewable Placer: Waste Action Plan, the nature and effectiveness of these measures are unknown at this time, and TAC-related impacts associated with the proposed project would be cumulatively considerable. Cumulative impacts related to exposure of sensitive receptors to TACs would be significant and unavoidable. This finding for the proposed project is consistent with the findings of the SAP EIR, which determined that the project's contribution to cumulative TACs would be cumulatively considerable, and the cumulative impact would be significant and unavoidable.

Create Objectionable Odors Affecting a Substantial Number of People: While odor abatement approaches and technologies would be implemented by the WPWMA as part of the Renewable Placer: Waste Action Plan, the nature and effectiveness of these measures are unknown at this time, and odor impacts would be cumulatively considerable. Therefore, the cumulative impact for odors would be significant and unavoidable. This finding is consistent with the findings of the SAP EIR, which determined that the impact of the project relative to odor impacts would be cumulatively considerable, and the cumulative impact would be significant and unavoidable.

2.5.3 Biological Resources

The proposed project would not create new cumulatively considerable biological resource impacts that were not considered in the SAP EIR. The SAP EIR assumed the same disturbance to site-specific biological resources as were assumed in this EIR. Therefore, cumulative biological resource impacts have been adequately addressed in the SAP EIR, and no additional discussion of cumulative impacts beyond what was included in the SAP EIR is warranted.

2.5.4 Cultural and Tribal Resources

Cultural and Tribal resources were not considered in the SAP EIR. No significant cultural, archaeological, or historical resources or tribal cultural resources were identified on the project site during cultural resource surveys. Therefore, cumulative cultural resource impacts have been adequately addressed, and no additional discussion of cumulative impacts beyond what was included in the SAP EIR is warranted.

2.5.5 Geology, Soils, and Paleontological Resources

The proposed project would not create new cumulatively considerable geology, soils, and paleontological resource impacts that were not considered in the SAP EIR. The proposed project does not include any soil-disturbing activities that were not considered in the SAP EIR for the project site. Therefore, cumulative geology, soils, and paleontological resource impacts have been adequately addressed in the SAP EIR, and no additional discussion of cumulative impacts beyond what was included in the SAP EIR is warranted.

2.5.6 Greenhouse Gas Emissions

The emissions estimates prepared to support this EIR indicate that the level of construction and operational emissions associated with implementation of the proposed project would exceed PCAPCD's bright line threshold of 10,000 MT CO_2e per year, and therefore would be cumulatively considerable. Implementation of GHG reduction measures and mitigation measures, along with establishment of offsets or purchase of carbon credits, would not reduce GHG emissions below PCAPCD significance thresholds for the life of the project. Because the availability and affordability of GHG offset credits in the future is uncertain, the impact remains significant and unavoidable.

2.5.7 Hazards, Hazardous Materials, and Wildfire

The proposed project would not create new cumulatively considerable hazards impacts that were not considered in the SAP EIR. The proposed project does not include any uses that were not considered in the SAP EIR for the project site. Therefore, cumulative hazards impacts have been adequately addressed in the SAP EIR, and no additional discussion of cumulative impacts beyond what was included in the SAP EIR is warranted.

While the SAP EIR did not evaluate impacts to wildfire, the proposed project and surrounding vicinity are not located in a wildland area with substantial forest fire risks and hazards nor in very high fire hazard severity zones. Therefore, the proposed project would result in no cumulative impacts on wildfire.

2.5.8 Hydrology and Water Quality

The proposed project would not create new cumulatively considerable hydrology or water quality impacts that were not considered in the SAP EIR. The proposed project does not include any uses that were not considered in the SAP EIR for the project site. Therefore, cumulative hydrology and water quality impacts have been adequately addressed in the SAP EIR, and no additional discussion of cumulative impacts beyond what was included in the SAP EIR is warranted.

2.5.9 Land Use and Planning

The proposed project would not create new cumulatively considerable land-use impacts that were not considered in the SAP EIR. The proposed project does not include any uses that were not considered in the SAP EIR for the project site. Therefore, cumulative land-use impacts have been adequately addressed in the SAP EIR, and no additional discussion of cumulative impacts beyond what was included in the SAP EIR is warranted.

2.5.10 Noise

The proposed project would not create new cumulatively considerable noise impacts that were not considered in the SAP EIR. The proposed project would generate noise levels consistent with the solid waste and industrial uses anticipated for the site in the SAP. Therefore, cumulative noise impacts have been adequately addressed in the SAP EIR, and no additional discussion of cumulative impacts beyond what was included in the SAP EIR is warranted.

2.5.11 Public Services

The proposed project would not create new cumulatively considerable public services impacts that were not considered in the SAP EIR. The proposed project does not include any uses that were not considered in the SAP EIR for the project site. Therefore, cumulative public services impacts have been adequately addressed in the SAP EIR, and no additional discussion of cumulative impacts beyond what was included in the SAP EIR is warranted.

2.5.12 Transportation

The proposed project would not create new cumulatively considerable transportation impacts that were not considered in the SAP EIR. The SAP EIR assumed the generation of substantially greater VMT from the project site than is anticipated in this EIR. Therefore, cumulative transportation impacts have been adequately addressed in the SAP EIR, and no additional discussion of cumulative impacts beyond what was included in the SAP EIR is warranted.

2.5.13 Utilities and Energy

The proposed project would not create new cumulatively considerable public utility or energy impacts that were not considered in the SAP EIR. The proposed project does not include any uses that were not considered in the SAP EIR for the project site. Therefore, cumulative public utility and energy impacts have been adequately addressed in the SAP EIR, and no additional discussion of cumulative impacts beyond what was included in the SAP EIR is warranted.

3. Project Description

3.1 Introduction

The Western Placer Waste Management Authority (WPWMA) is proposing to implement the Renewable Placer: Waste Action Plan (Waste Action Plan or project) within the properties owned by the WPWMA in western Placer County. The WPWMA has identified two separate plan concepts for implementing the Waste Action Plan, which are evaluated at an equal level of detail in this Draft Environmental Impact Report (EIR). These two plan concepts were developed through a detailed planning process that included convening an Advisory Committee composed of key staff from each of WPWMA's Member Agencies; organizing a Stakeholder Working Group consisting of nearby commercial entities, developers, environmental groups, and residential neighborhood representatives; and preparing detailed technical evaluations. This chapter describes the two plan concepts, which are collectively referred to as the proposed project.

3.2 Project Location

The project site is located on the eastern edge of the Sacramento Valley in Placer County (Figure 1-1) between the cities of Roseville and Lincoln. The site is located on WPWMA's three existing properties, generally at the intersection of Athens Avenue and Fiddyment Road, as described in Section 1.2 and shown on Figure 1-2.

3.3 Plan Concept Descriptions

The Waste Action Plan includes solid waste elements, complementary and programmatic elements, and supporting elements that are incorporated in both Plan Concept 1 and Plan Concept 2. The plan concepts contain these similar elements, but the locations and characteristics of the elements vary between the two concepts. Solid waste (Waste Recovery and Waste Disposal) project elements and supporting elements include those directly under the WPWMA's control. These elements are evaluated at a project-specific level of detail in this EIR. Complementary and programmatic elements include those that may involve third parties. Some of these complementary and programmatic elements are evaluated at a project level and some are evaluated at a program level.

Section 3.4 identifies the baseline condition for each project element and how it would change for each plan concept. Within Section 3.4, Tables 3-1, 3-2, and 3-3 summarize the solid waste project elements, complementary and programmatic elements, and supporting elements, respectively. Detailed descriptions of Plan Concept 1 and Plan Concept 2 are provided in Sections 3.5 and 3.6, respectively.

Solid waste project elements are the Waste Recovery and Waste Disposal project elements that are needed to continue providing solid waste management services to WPWMA's Participating Agencies in the near and long term. These project elements are summarized as follows:

Waste Recovery

- Expanded Operation of Materials Recovery Building – The proposed project includes continued and expanded operation of the Materials Recovery Facility (MRF) Building to accommodate growth in the waste stream.
- Expanded and Redesigned Organics Management Operation – The organics management operation would include an expanded and redesigned organics processing operation to increase capacity to

accommodate growth in the organics waste stream and increased organic diversion required by new state-mandated organics diversion regulations (Senate Bill 1383) to accept additional compostable material streams (for example, food waste, other organics), and to improve odor control.

- Expanded and Redesigned Construction and Demolition Materials Processing Operation – The construction and demolition (C&D) materials processing operation is proposed to be redesigned to increase capacity to accommodate growth in the waste stream and respond to increased state-mandated diversion requirements (e.g., CALGreen Building Standards) and the needs of Participating Agencies.
- Expanded and Redesigned Public Waste Drop-off Area Operations – The public waste drop-off area operations are proposed to include a new public waste tipping area, material buy-back center, household hazardous waste (HHW) facilities, reuse store, and a new entrance kiosk with vehicle queuing lanes. The expanded and redesigned public waste drop-off area operations are proposed to accommodate population growth and associated facility use, support customer safety and convenience, and provide opportunities for increased material diversion (e.g., operation of a reuse store).

Waste Disposal

- Expanded Landfill Disposal Capacity – The Western Regional Sanitary Landfill's (WRSL's) disposal capacity is proposed to be expanded to accommodate current and future Participating Agency solid Waste Disposal demands. This element addresses landfill expansion, tonnage and vehicle limit changes, and landfill environmental monitoring and control systems.
- Excavation of Existing Solid Waste – Closed and pre-Subtitle D sections of the WRSL are proposed to be excavated and relocated to a Subtitle D-compliant module on the site. Subtitle D of the Resource Conservation and Recovery Act (Part 258 of the *Code of Federal Regulations* [CFR]) regulates the design, operation, and monitoring of municipal solid waste landfills.

Complementary and Programmatic Elements are the project elements that are not specifically required to provide continued solid waste management services to the Participating Agencies but are important in achieving other project objectives (e.g., create opportunities for innovation and economic growth, enhance opportunities to increase recycling and landfill waste diversion, and enhance ability to comply with regulations). These project elements include the following:

- Compatible Technologies – Space would be reserved for third-party commercial or full-scale compatible technologies and manufacturing operations that would take materials and products primarily from the WPWMA's facility to produce beneficial products, including renewable energy, fuels, and marketable commodities.
- Pilot Study Area – Space would be reserved for third parties to conduct pilot studies, using materials and products primarily from WPWMA's facility and processing them in new ways or producing beneficial products, including renewable energy, fuels, and marketable commodities.
- University Research Area – Space would be reserved for university-led research, using materials and products primarily from the WPWMA's facility and processing them in new ways or producing beneficial products, including renewable energy and marketable commodities. This could also include more general solid waste-related research to, for example, improve facility diversion, increase efficiencies, and lower environmental impacts.
- Landfill Gas (LFG)-to-Compressed Natural Gas Area – Space would be reserved for a potential third-party or WPWMA-led facility that would convert LFG to compressed natural gas, hydrogen, or other renewable fuel that could be used to fuel vehicles operated by local governments, waste hauling or other private companies, or otherwise be transferred to other end users.

Supporting Elements are the project elements required to support the solid waste management and complementary and programmatic elements. Some of these elements already exist at the site and would be modified with project implementation, and some would be new additions. The elements include recovered materials storage areas, stormwater ponds, road crossings, maintenance areas, administrative buildings, facility parking, entrance facilities, wastewater and water supply infrastructure, LFG-to-energy plant, and site perimeter infrastructure.

3.3.1 Potential Facility Operating Contract Amendments

The WPWMA is currently undergoing a competitive procurement process for the future near-term (approximately 10-year) waste recovery and waste disposal contract operations WPWMA developed Requests for Proposals (RFPs) for these operations in May 2020. As part of that process, the WPWMA received proposals for waste recovery operations (termed MRF operations for the RFP) and for waste disposal operations (termed landfill operations for the RFP). The WPWMA's procurement process is ongoing as of the preparation of this Draft EIR (DEIR).

An independent review of the proposals for MRF operations was conducted following WPWMA's Board authorization at the February 11, 2021, WPWMA Board meeting. The independent review entailed a high-level review of the MRF operations conceptual designs to assist WPWMA with determining what, if any, proposed elements are not currently fully addressed in the two plan concepts. This EIR includes potential changes to the management of organics contained within the municipal solid waste (MSW) stream and the diversion rates that are proposed to result from additional organics processing.

Conceptual designs associated with the proposals for MRF operations are preliminary and do not contain enough detail to alter the details of Plan Concept 1 or Plan Concept 2. In this chapter, a discussion on the potential differences between the proposals for MRF operations and the proposed project have been added as a subsection within the respective sections that describe the Expanded and Redesigned Organics Management Operation. Chapter 4, Approach, includes additional discussion regarding the potential environmental impacts associated with the increased diversion and processing of organic materials entrained within the mixed (non-source separated) solid waste stream.

3.4 Baseline Condition and Plan Concept Comparison

Chapter 1, Introduction, provides a detailed discussion of the operations of existing facilities at the WPWMA site and an explanation of the environmental baseline for the project, based on current operations. For purposes of analysis in this DEIR, the baseline conditions are generally the conditions that existed on the three WPWMA-owned properties when the Notice of Preparation was released on March 15, 2019. For solid waste operations that fluctuate on a daily basis, the baseline is based on averages from calendar year 2018, unless otherwise specified. A full calendar year was used to capture the full range of operations that typically occur at the site over four seasons.

Tables 3-1, 3-2, and 3-3 summarize the environmental baseline and the changes associated with both plan concepts for solid waste project elements, complementary and programmatic elements, and supporting elements, respectively, which are discussed in detail in Sections 3.5 (Plan Concept 1) and 3.6 (Plan Concept 2) of this chapter.

Table 3-1. Summary of Environmental Baseline and Change Associated with Solid Waste Elements

Waste Action Plan Project Element	Environmental Baseline	Plan Concept 1 Change	Plan Concept 2 Change
Sitewide Operations			
Material Tonnage Permit Limits	Waste Recovery operations limited to 1,750 tpd; Waste Disposal operations limited to 1,900 tpd	Sitewide solid waste management activities limited to a rolling 7-day average of 4,000 tpd	Sitewide solid waste management activities limited to a rolling 7-day average of 4,000 tpd
Vehicle Permit Limits	Waste Recovery operations limited to 1,014 vehicles per day; Waste Disposal operations limited to 624 vehicles per day	The permitted vehicle limits for Waste Recovery and Waste Disposal operations would be eliminated	The permitted vehicle limits for Waste Recovery and Waste Disposal operations would be eliminated
Material Tons	The WPWMA facility received 483,968 tons of solid waste material in 2018	The WPWMA facility would receive up to 912,200 tons of solid waste material by 2050	The WPWMA facility would receive up to 912,200 tons of solid waste material by 2050
Material Recovery	Approximately 39% of material received at the site was recovered from the waste stream in 2018	The WPWMA facility would have a material recovery rate of 50% or greater by 2050	The WPWMA facility would have a material recovery rate of 50% or greater by 2050
Odor Management	Odors are managed by facility (in particular, MRF building, composting operation, WRSL)	Odors would be managed sitewide through implementation of a SWOP	Odors would be managed sitewide through implementation of a SWOP
Waste Recovery			
MRF Operation	The MRF building processed 240,068 tons of MSW in 2018	The MRF building would process up to 416,600 tons of MSW per year	The MRF building would process up to 416,600 tons of MSW per year
Expanded and Redesigned Organics Management Operation	Organics management operation located in the northern part of the center property	Expanded organics management relocated to the central part of the western property	Expanded organics management operation within the northern part of the center property. Requires relocation of waste in modules 1, 2, 10, and 11
	Organics management operation, using composting.	Designed to accommodate composting but could also accommodate other organics management methods.	Designed to accommodate composting but could also accommodate other organics management methods.
	The composting operation processed 60,606 tons in 2018, with minimal food waste	The composting operation would process up to 157,900 tons by 2050; food waste added	The composting operation would process up to 157,900 tons by 2050; food waste added
	Two compost leachate collection ponds on center property	50% increase in overall pond capacity and removal of pond on center property	50% increase in overall pond capacity and removal of pond on center property
	Processing via windrow piles	Processing transitions from windrows to ASP technology	Processing transitions from windrows to ASP technology

Table 3-1. Summary of Environmental Baseline and Change Associated with Solid Waste Elements

Waste Action Plan Project Element	Environmental Baseline	Plan Concept 1 Change	Plan Concept 2 Change
	Compostable materials received outside	Potential construction of a food waste receiving building	Potential construction of a food waste receiving building
	Odor control consists of implementation and maintenance of good operating practices consistent with the OIMP	Odor control consists of implementing a SWOP, which incorporates the OIMP; odor control improved by change in composting technology and use of biofilter layer on the compost piles.	Odor control consists of implementing a SWOP, which includes the OIMP; odor control improved by change in composting technology and use of biofilter layer on the compost piles.
Expanded and Redesigned C&D Materials Processing Operation	C&D materials processing located in the northern part of the center property	C&D materials processing operation increased in size by 2 to 3 times on the center property	C&D materials processing operation increased in size by 2 to 3 times on the center property and integrated with expanded composting operation and redesigned public waste drop-off; requires relocation of waste in modules 1, 2, 10, and 11
	The C&D materials processing operation, including inerts area, processed 87,404 tons in 2018	The C&D materials processing operation would process up to 174,600 tons per year of C&D plus 55,200 tons per year inerts by 2050	The C&D materials processing operation would process up to 174,600 tons per year of C&D plus 55,200 tons per year inerts by 2050
Expanded and Redesigned Public Waste Drop-Off Area Operations	Public waste drop-off area operations (tipping area, buy-back center, HHW) located in the northern part of the center property	Public waste drop-off area operations expanded and redesigned and relocated to the western property; new facilities include a public tipping area, material buy-back center, HHW waste drop-off area, reuse store, and entrance kiosk with vehicle queuing.	Expanded and redesigned public waste drop-off operations on the center property; new facilities include public tipping area, material buy-back center, HHW waste drop-off area, and reuse store; requires relocation of waste in modules 1, 2, 10, and 11
	Public waste drop-off area operations received 44,194 tons in 2019	Public waste drop-off area operations would receive up to 83,300 tons per year by 2050	Public waste drop-off area operations would receive up to 83,300 tons per year by 2050
Environmental control measures for Waste Recovery operations	Environmental control measures are implemented in a manner consistent with regulations to protect public health and the environment	Existing environmental control measures would continue and expand with the expanded Waste Recovery operations	Existing environmental control measures would continue and expand with the expanded Waste Recovery operations
Waste Disposal			
Increased Waste Disposal	Annual tons disposed – 288,838	Projected annual tons disposed – 521,100 by 2050	Projected annual tons disposed – 521,100 by 2050

Table 3-1. Summary of Environmental Baseline and Change Associated with Solid Waste Elements

Waste Action Plan Project Element	Environmental Baseline	Plan Concept 1 Change	Plan Concept 2 Change
Expanded Landfill Disposal Capacity	Waste footprint located on center property in one contiguous landfill footprint	Waste footprint expanded to eastern property in one contiguous landfill footprint	Waste footprint expanded to western property with distinct landfill footprints on the center and western properties
	Elevation – 196 feet AMSL and permitted peak elevation – 295 feet AMSL	Height increase above current conditions – 129 feet. Height increase above currently permitted conditions – 30 feet	Height increase above current conditions – 129 feet. Height increase above currently permitted conditions – 30 feet
	Permitted waste footprint – 231 acres	Waste footprint expands by 89 acres to 320 acres	Waste footprint expands by 131 acres to 362 acres
	Permitted capacity – 36.3 million cy	Landfill disposal capacity increases by approximately 45.1 million cy	Landfill disposal capacity increases by approximately 50.2 million cy
	Waste capacity exhausted by approximately 2058	Estimated landfill site life increases by approximately 43 years	Estimated landfill site life increases by approximately 52 years
	Eventual relocation of Waste Recovery operations on currently permitted Module 9 to allow for future landfill disposal	Elimination of currently permitted Module 9 for future Waste Disposal	Elimination of currently permitted Modules 8 and 9 for future Waste Disposal
Excavation of Existing Solid Waste	Waste in non-Subtitle D lined modules (modules 1, 2, 10, 11)	Module 1, 2, 10, and 11 contents would be excavated and relocated to an onsite Subtitle D-compliant module; excavated modules would be lined and reused for future Waste Disposal when needed; remaining excavated module areas would be backfilled with clean soil (starting in year 2045) within 5 years to accommodate expansion of solid waste activities on the center property.	Module 1, 2, 10, and 11 contents would be excavated and relocated to an onsite Subtitle D-compliant module; a portion of Module 11 would be lined and reused for future Waste Disposal; remaining excavated module areas would be backfilled with clean soil within 3 years (starting in year 2024) to accommodate expansion of solid waste activities on the center property
	Peak elevations of Modules 1, 2, 10, and 11 do not exceed approximately 170 feet AMSL	The peak elevation of Modules 1, 2, 10, and 11 would be approximately 325 feet AMSL	A portion of Module 11 would be relined and incorporated into the remaining waste cells, which would be approximately 325 feet AMSL. Modules 1, 2, 10, and part of 11 would be filled with clean soil to match the surrounding ground elevation

Table 3-1. Summary of Environmental Baseline and Change Associated with Solid Waste Elements

Waste Action Plan Project Element	Environmental Baseline	Plan Concept 1 Change	Plan Concept 2 Change
Landfill Environmental Monitoring and Control Systems	Double-composite landfill liners are installed in modules constructed within the existing permitted landfill footprint	No changes in the liner systems; future modules would include double-composite liners	No changes in the liner systems; future modules would include double-composite liners
	Leachate, surface water, LFG management systems	The leachate, surface water, and LFG management systems would be expanded to accommodate the expanded landfill footprint and height	The leachate, surface water, and LFG management systems would be expanded to accommodate the expanded landfill footprint and height, and duplicated for the landfill expansion on the western property

Notes:
AMSL = above mean sea level
C&D = Construction and Demolition
cy = cubic yard(s)
OIMP = Odor Impact Minimization Plan
SWOP = Site-Wide Odor Plan
tpd = ton(s) per day

Table 3-2. Summary of Environmental Baseline and Change Associated with Complementary and Programmatic Elements

Waste Action Plan Project Element	Environmental Baseline	Plan Concept 1 Change	Plan Concept 2 Change
Complementary and Programmatic Elements	Grazing operations on the eastern property, solid waste operations on the center property, and irrigation and model airplane operations on the western property	Project Level – Development of up to 300,000 square feet of buildings plus exterior infrastructure for industrial uses that are complementary to the solid waste management elements. Industrial uses may include compatible technologies, pilot study areas, university research areas, and an LFG to compressed natural gas area Program Level – Up to 1.6 million square feet of industrial uses that are complementary to the solid waste management elements	Project Level – Development of up to 300,000 square feet of buildings plus exterior infrastructure for industrial uses that are complementary to the solid waste management elements. Industrial uses may include compatible technologies, pilot study areas, university research areas, and an LFG to compressed natural gas area Program Level – Up to 1.6 million square feet of industrial uses that are complementary to the solid waste management elements
		Project Level – Located on the northern part of the western property Program Level – Primarily in the northern and southern	Project Level – Located on the northern part of the eastern property Program Level – Primarily on the eastern property, plus

Table 3-2. Summary of Environmental Baseline and Change Associated with Complementary and Programmatic Elements

Waste Action Plan Project Element	Environmental Baseline	Plan Concept 1 Change	Plan Concept 2 Change
		parts of the western property, plus locations on the center property, although some uses may be developed in closer proximity to the solid waste project elements or within areas not yet developed with solid waste project elements	locations on the center property and southern part of the western property, although some uses may be developed in closer proximity to the solid waste project elements or within areas not yet developed with solid waste project elements

Table 3-3. Summary of Environmental Baseline and Change Associated with Supporting Elements

Waste Action Plan Project Element	Environmental Baseline	Plan Concept 1 Change	Plan Concept 2 Change
Waste Recovery and Waste Disposal – Supporting Elements	Materials recovered from the MRF operations are stored either within or outside of the MRF building, depending on materials type and space constraints	Construction of a new recovered materials storage building and increased ability to store recovered materials inside	Construction of a new recovered materials storage building and increased ability to store recovered materials inside
	Stormwater ponds on center property	New and expanded stormwater ponds on western, center, and eastern properties	New and expanded stormwater ponds on western and center properties
	Road crossings between center and western property limited to public roads	Separated facility-only crossing of Fiddyment Road that would connect center and western properties	Separated facility-only crossing of Fiddyment Road that would connect center and western properties
	Maintenance facility on the center property	Center property maintenance facility would be upgraded and a new satellite maintenance facility would be constructed on the western property (for compost and public waste drop-off operations)	Center property maintenance facility would be upgraded and a new satellite maintenance facility would be constructed on the western property (for landfill operations)
	Administration building on the center property	Expansion or addition of administration building with an education center and parking	Expansion or addition of administration building with education center and parking
	Entrance facilities on Athens Avenue	Upgraded Athens Avenue entrance facilities, including	Upgraded Athens Avenue entrance facilities, including site access and

Table 3-3. Summary of Environmental Baseline and Change Associated with Supporting Elements

Waste Action Plan Project Element	Environmental Baseline	Plan Concept 1 Change	Plan Concept 2 Change
		site access and scale house infrastructure when needed	scale house infrastructure when needed
	Restricted dirt road access to western property at Fiddyment Road and Athens Avenue intersection	New paved site entrance to western property at Fiddyment Road and Athens Avenue intersection to accommodate public access to the western property	New paved site entrance to western property at Fiddyment Road and Athens Avenue intersection to accommodate expanded landfill operation
	Wastewater and fire protection water line used for the existing Public Waste Drop-Off Area operations	A new wastewater and new fire protection water line extending to the western property would be necessary to service the relocated public waste drop-off area operations	A new wastewater and fire protection water line extending to the western property would be necessary to service the expanded landfill operations
	LFG-to-energy plant operations on center property	No change to continued LFG-to-energy plant operations on the center property	No change (beyond LFG management systems on the western property, mentioned in Table 3-1) to continued LFG-to-energy plant operations on the center property
	Landscaping and fencing located along sections of the center property	Expanded perimeter landscaping and fencing to surround entire project site	Expanded perimeter landscaping and fencing to surround entire project site

3.5 Plan Concept 1

Plan Concept 1 (Figure 3-1) includes all of the elements summarized in Tables 3-1, 3-2, and 3-3 of Section 3.3. Section 3.5.1 describes changes to sitewide solid waste operations related to Waste Recovery and Waste Disposal that would change as a result of Plan Concept 1, while Sections 3.5.2 and 3.5.3 describe the unique Waste Recovery and Waste Disposal elements that are proposed to be implemented for Plan Concept 1. Section 3.5.4 describes complementary and programmatic elements proposed for Plan Concept 1, and Section 3.5.5 describes supporting elements for Plan Concept 1.

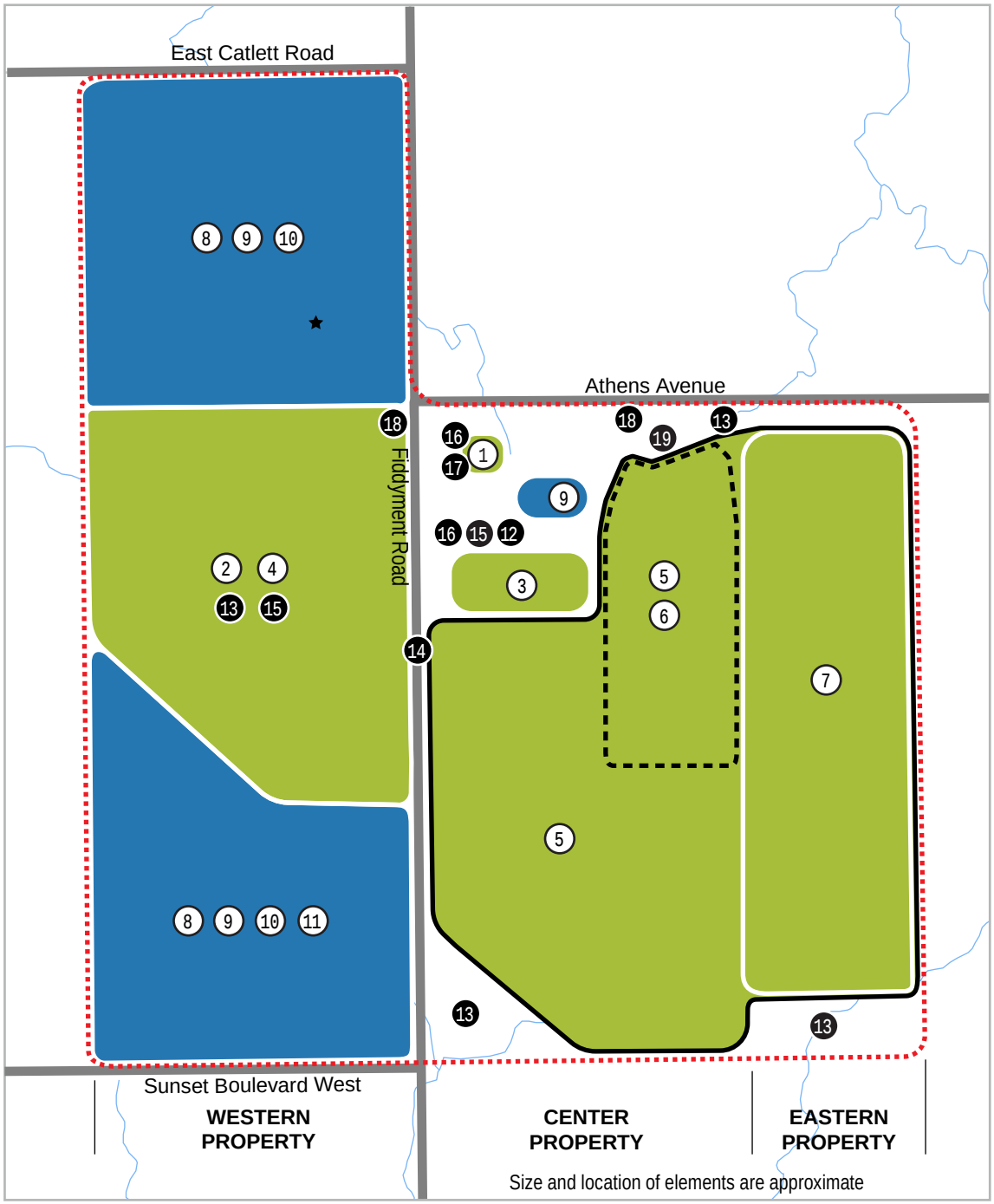

LEGEND

Solid Waste Project Elements

1. Materials Recovery Facility Building
2. Organics Management Operation
3. Construction & Demolition Materials Processing Operation
4. Public Waste Drop-Off Area Operations, Including Household Hazardous Waste Facility
5. Current & Future Landfill
6. Waste Excavation Area
7. Landfill Expansion Area

Complementary/Programmatic Elements

8. Compatible Technologies
9. Pilot Study Area
10. University Research Area
11. Landfill Gas To Compressed Natural Gas Area

★ Approximate Location of Project Level Complementary Elements

Supporting Elements

12. Recovered Materials Storage Area
13. Stormwater Ponds
14. Road Crossing
15. Maintenance Areas
16. Administrative Building Areas
17. Parking
18. Entrances
19. Landfill Gas-to-Energy Plant

Project Boundary

Landfill Footprint

Waste Excavation Area

North

0 0.5 1

Approximate scale in miles

Figure 3-1. Plan Concept 1
Draft Environmental Impact Report
Renewable Placer: Waste Action Plan
Placer County, California

Jacobs

3.5.1 Sitewide Solid Waste Operations

Summary

Table 3-4 summarizes the existing environmental baseline conditions related to sitewide solid waste operations and how implementation of Plan Concept 1 would change those conditions.

Table 3-4. Summary of Sitewide Solid Waste Operational Changes Under Plan Concept 1

Environmental Baseline	Plan Concept 1	Change
483,968 tons per year of material received at the site	Up to 912,200 tons per year of material received at the site	Up to 428,232 additional tons per year of material received at the site
Approximately 39% of material received at the site is recovered from the waste stream	Recovery of material received from the waste stream of 50% or greater	Recovery of material received at the site from the waste stream increased by 11% or greater
Waste Recovery operations limited to 1,750 tons per day; Waste Disposal operations limited to 1,900 tpd	Sitewide solid waste management activities limited to a 7-day rolling average of 4,000 tpd	Conversion to a single permit limit; sitewide, 7-day rolling average of 4,000 tpd
Waste Recovery operations limited to 1,014 vehicles per day; Waste Disposal operations limited to 624 vehicles per day	The permitted vehicle limits for Waste Recovery and Waste Disposal operations would be eliminated	The number of Waste Recovery and Waste Disposal vehicles accessing the WPWMA facility would no longer be controlled by a permit limit
Odors are managed by facility (in particular, MRF building, composting operation, WRSL)	Odors would be managed sitewide through implementation of a SWOP	Improvements in odor control by managing odors sitewide rather than by facility

Detailed Description

The proposed project has been identified to address the physical and operational changes that are needed at the WPWMA facility to accommodate the solid waste management needs of the Participating Agencies into the future, as well as to provide opportunities for future compatible technologies to be located onsite. Sitewide changes associated with Plan Concept 1 related to material and permit limits, traffic, and odor management are described in the following sections of this chapter.

Sitewide Material Quantities, Diversion Rate, and Permitted Tonnage.

The WPWMA projects an average 2 percent annual increase in the amount of waste received at the facility over the project period. This estimated increase in the waste stream reflects anticipated regional growth trends and changes in the recyclables market based on current and upcoming regulatory requirements and other market conditions.

As shown on Figure 1-4 (2018 Waste Material Flowchart) and Figure 3-2 (2050 Waste Material Flowchart), the WPWMA anticipates that annual waste material received at the site will grow from 483,968 tons in 2018 to 912,200 tons by 2050. In 2018, approximately 39 percent of waste material received at the site was recovered from the waste stream and not placed in the WRSL. By 2050, the recovery rate is anticipated to increase to 50 percent or greater, primarily because of operational changes in organics management and C&D processing operations. Recovery greater than 50 percent may be possible as a result of future regulatory requirements and diversion opportunities that could result from the type and size of complementary technologies evaluated at a programmatic level in this EIR and discussed in Section 3.5.4.

The existing Solid Waste Facilities Permit (SWFP) for Waste Recovery operations includes a permit limit of 1,750 tpd of material received, while the existing SWFP for Waste Disposal operations has a permit limit of 1,900 tpd of material received. In order for the WPWMA facility to accommodate anticipated growth in waste tonnage, Plan Concept 1 assumes the sitewide (Waste Recovery and Waste Disposal) permitted peak daily waste acceptance limit would be converted to a sitewide 7-day rolling average of 4,000 tpd. This change would allow the WPWMA to respond to changing regulations and waste streams without the potential to exceed a permit limit associated with either Waste Recovery or Waste Disposal. This change would also allow the WPWMA to seamlessly divert material received at the site to future compatible manufacturing technologies, further contributing to increased diversion rates. With this change, the daily sitewide tonnage limit would be defined as the average over a continuous rolling 7-day period. This number is identified by calculating, on each day that material is accepted, the average daily tonnage received over the prior 7 operating days. This rolling-average permit limit is proposed so that during unusually high peak days, waste haulers are not turned away, while the WPWMA facility still maintains a limit that prevents waste acceptance volumes from exceeding estimated growth levels.

The sitewide 7-day rolling average of 4,000 tpd considers a number of factors, including the variability between material types and acceptance rates and modes (for example, materials delivered to the WRSL and MRF are typically delivered in larger trucks on weekdays, whereas material received at the public waste drop-off area is typically delivered in small personal vehicles on the weekend). The sitewide 7-day rolling average also takes into account the anticipated increase in materials through 2050 and the relationship between average tons received per day and peak tons received per day over the past several years.

Removal of Permit Limit for Vehicles

Currently, Waste Recovery operations under SWFP No. 031-AA-0001 include a vehicle limit of 1,014 vehicles per day, while Waste Disposal operations under SWFP No. 031-AA-0210 include a vehicle limit of 624 vehicles per day. Plan Concept 1 proposes to eliminate vehicle permit limits for Waste Recovery and Waste Disposal operations, instead relying on a sitewide tonnage limit with a 7-day rolling average, as described previously. Because daily vehicle permit limits would require waste-hauling vehicles to be turned away if they are exceeded, the limits have the potential to discourage the appropriate disposal of waste materials. Eliminating the vehicle limits for Waste Recovery and Waste Disposal operations would not be expected to increase the number of vehicle trips generated by such operations, as the number of inbound vehicles would instead be controlled through the sitewide tonnage limit.

Sitewide Odor Management

In addition to the odor-control measures currently undertaken at the facility and described throughout Chapter 1, Introduction, the WPWMA will fully implement a SWOP to provide information about facility odor sources, meteorological conditions that have the potential to exacerbate the perception of odors, and the measures the WPWMA will take to reduce the potential for facility odors to be perceived by nearby receptors. The SWOP will be used as a tool by the WPWMA and its facility operators and contractors to consistently and proactively take the appropriate steps to reduce the potential for offsite odors. The SWOP will establish BMPs used by the WPWMA and its contractors and operators to mitigate the release of odors from WPWMA facilities. It will include measures to prevent, monitor, and address odors. The BMPs will reflect current operating and regulatory conditions; changes in regulations or programs operated by the Participating Agencies may necessitate revisions to the SWOP.

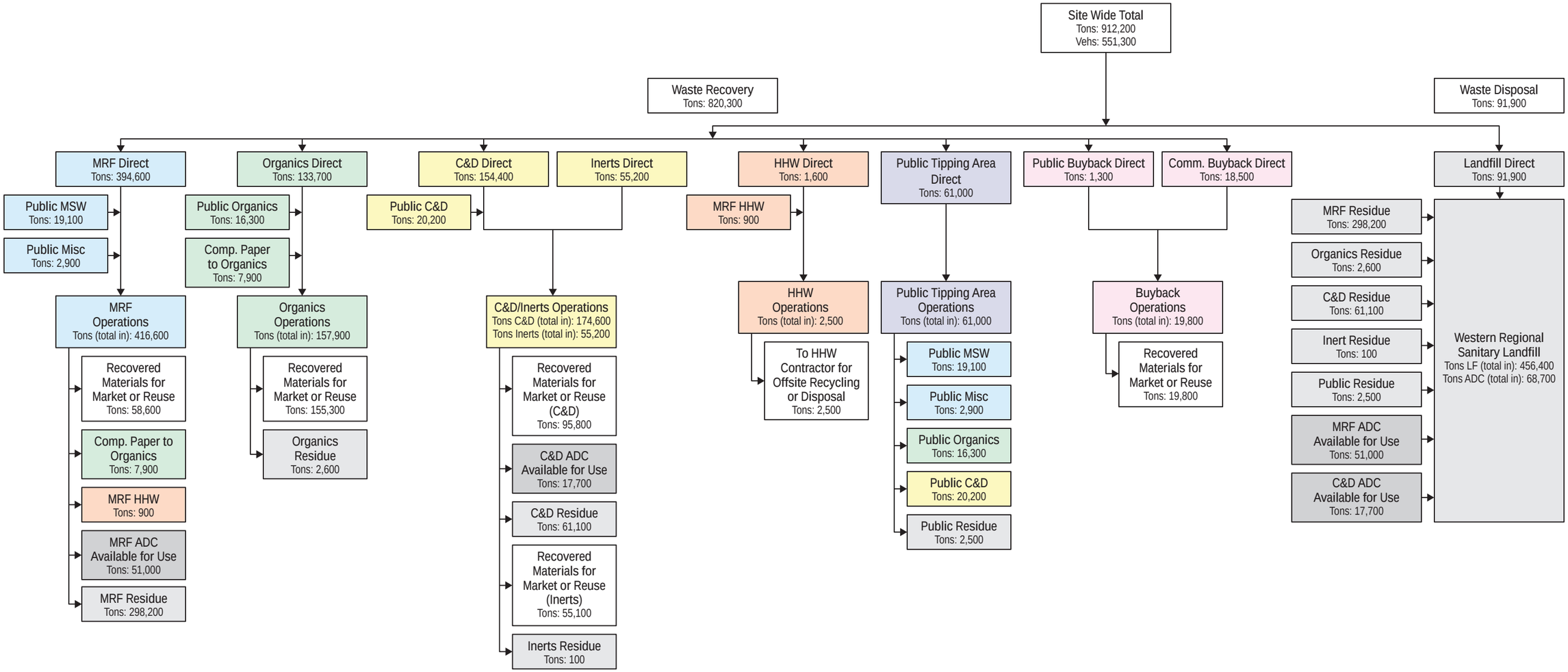

GENERAL NOTES

1. This flow diagram has been prepared for planning purposes and for use in the preparation of the Renewable Placer Waste Action Plan EIR.
2. The 2050 annual projections included on this flow diagram are based on actual 2018 tonnage and incoming vehicle quantities that have been escalated based on a number of assumptions, including, but not limited to, population projections and solid waste regulations.
3. Tonnage and vehicle quantities have been rounded in 2050 after escalation.
4. Projections have been estimated with best available data at the time of development; actual conditions in the future may differ.
5. Only customer vehicle counts as presented. Internal site vehicles are not shown.

SPECIFIC NOTES

a. ADC tons are available for use as ADC at the landfill if needed. If not needed, ADC tons are disposed.

Figure 3-2. 2050 Waste Material Flow Chart
Draft Environmental Impact Report
Renewable Placer: Waste Action Plan
Placer County, California

The SWOP identifies four facilities or operations at the WPWMA facility with the greatest potential to produce odors: MRF building, composting operation, active landfill areas, and LFG collection and control system. Specific odor-control measures from the SWOP for each of these operations is included in their respective discussion in this chapter. The SWOP is included in Appendix C.6.

3.5.2 Waste Recovery Operations

Plan Concept 1 (Figure 3-2) includes changes to the Waste Recovery operations that occur at the MRF building, organics management operation, C&D material processing operation, and public waste drop-off area operations, each of which are described in Sections 3.5.2.1 through 3.5.2.4. Changes in the environmental control features common to Waste Recovery operations are described in Section 3.5.2.5.

Expanded Material Recovery Facility Building Operation

Summary.

Table 3-5 summarizes existing environmental baseline conditions related to MRF building operations and how implementation of Plan Concept 1 would change those conditions.

Table 3-5. Summary of Expanded MRF Building Operation Under Plan Concept 1

Environmental Baseline	Plan Concept 1	Change
Annual waste material processing of 240,068 tons	Annual waste material processing of up to 416,600 tons	MRF building processes up to an additional 176,532 tons per year by 2050
MRF building permitted to receive material from 6:00 a.m. to 7:30 p.m. Monday through Saturday and from 6:00 a.m. to 5:00 p.m. Sundays and designated holidays	MRF building permitted to receive material from 6:00 a.m. to 7:30 p.m. Monday through Saturday and from 6:00 a.m. to 5:00 p.m. Sundays and designated holidays	No change
Material processing at MRF building permitted from 6:00 a.m. to 11:30 p.m. Monday through Sunday, with additional maintenance and cleanup work permitted from 4:00 p.m. to 6:00 a.m. Monday through Sunday	Material processing at MRF building may occur 24 hours per day, 7 days per week	Daily material processing at MRF building potentially occurring overnight.

Detailed Description.

In 2018, approximately 50 percent of the material received at the WPWMA facility was processed through the MRF building, or approximately 240,068 tons. By 2050, material processed through the MRF building is anticipated to increase to approximately 416,600 tons, or roughly 46 percent of the total material received at the WPWMA facility. The existing MRF building is sized to accommodate the increase in annual tonnage anticipated through 2050, but hours of operation for the MRF building would increase as tonnage increases over time. The MRF building is permitted to process material from 6:00 a.m. to 7:30 p.m.,. Monday to Saturday and from 6:00 a.m. to 5:00 p.m. Sundays and holidays, but it currently typically operates a single shift from 6:30 a.m. to 3:00 p.m. Monday to Friday. The WPWMA anticipates that the hours per day for MRF building operations will increase as material processed increases, potentially up to a 24-hour per day operation. While this represents an increase over the current and permitted operation, the

WPWMA is currently permitted to conduct MRF building maintenance and cleanup activities 24 hours per day.

MRF Building Odor Control – The materials processed in the MRF building include organic materials and other putrescible wastes that have the potential to emit odors as they begin to decompose. As such, the WPWMA currently implements BMPs for odor control for the MRF building. As part of the proposed project, the WPWMA will implement BMPs for the MRF building as part of the SWOP, as provided in Appendix C.6. These BMPs focus on timely and consistent processing of the materials and regular housekeeping and cleaning of the facility to avoid the accumulation of potentially odiferous materials.

Achievement of Project Objectives – Expanded operation of the MRF building would help the WPWMA achieve several project objectives, including the following:

- Stabilizing the costs of Waste Recovery efforts
- Improving operational efficiencies
- Extending the operational life of the current WPWMA facility
- Increasing the diversion of materials from the landfill
- Reducing greenhouse gas (GHG) emissions
- Enhancing operational flexibility
- Facilitating the siting and development of compatible technologies

Expanded and Redesigned Organics Management Operation

Summary.

Table 3-6 summarizes existing environmental baseline conditions related to the organics management operation and how implementation of Plan Concept 1 would change those conditions.

Table 3-6. Summary of Expanded and Redesigned Organics Management Operation Under Plan Concept 1

Environmental Baseline	Plan Concept 1	Change
Organics management operations located in the northern part of the center property	Expanded organics management operations relocated to the central part of the western property	Organics management operations relocated to the western property and expanded
Organics management operation consists of composting	Organics management operation designed for composting but could accommodate other methods in the future	No change in use of composting for organics management
60,606 tons per year of green waste composted	157,900 tons per year of green waste, food waste, and other organics composted	Increase of 97,294 tons per year of compost and addition of food waste composting
Two compost leachate collection ponds on center property	Construct one leachate collection pond on western property and remove one pond on center property	50% increase in pond capacity and removal of pond on center property
Windrow composting process	Composting process – ASP technology active composting	Transition from windrow to ASP technology

Table 3-6. Summary of Expanded and Redesigned Organics Management Operation Under Plan Concept 1

Environmental Baseline	Plan Concept 1	Change
Compostable materials received outside	Potential construction of food waste-receiving building	Evaluation conducted with and without a future food waste receiving building
Odor control – Implementation and maintenance of good operating practices consistent with the OIMP	Odor control – Implement a SWOP, ASP technology, and use a biofilter layer on the piles to provide some odor control in addition to good operating practices	Improved composting technology for odor control

Detailed Description.

The need for the expanded and redesigned organics management operation is driven by anticipated population growth within the WPWMA's service area and Senate Bill (SB) 1383. SB 1383 was signed into California law in 2016, establishing methane emissions reduction targets in a statewide effort to reduce emissions of short-lived climate pollutants (SLCP) in various sectors of California's economy. SB 1383 establishes targets to achieve a 50 percent reduction in the level of the statewide disposal of organic waste from the 2014 level by 2020 and a 75 percent reduction by 2025.

Methane emissions resulting from the decomposition of organic waste in landfills contribute to global climate change. Organic materials, including waste that can be recycled or composted, account for a significant amount of California's overall waste stream. Food waste alone accounts for approximately 18 percent of material that goes to landfills. Increasing food waste prevention, encouraging edible food rescue, and expanding the composting and in-vessel digestion of organic waste throughout the state is expected to help reduce methane emissions from organic waste disposed in California's landfills. In addition, compost has numerous benefits, including water conservation, improved soil health, and carbon sequestration, and anaerobic digestion produces biogas that can be used to create electricity or renewable transportation fuels (CalRecycle 2019).

The WPWMA actively supports the Participating Agencies in meeting the targets established by SB 1383. In particular, the expanded organics management operation at the WPWMA facility proposed as part of Plan Concept 1 is intended to help the Participating Agencies achieve a 75 percent reduction in the level of disposal organic waste by 2025.

Initially, the WPWMA intends to manage the organics waste stream by implementing an expanded composting operation, which is described in detail in the following subsection. The proposed composting operation would continue processing green waste material and incorporate increasing amounts of food waste and other organics.

In the future, the WPWMA may determine that it is more beneficial to the Participating Agencies to manage the organics waste stream in alternate ways in addition to composting. For example, one method of managing food waste that is becoming more common is through anaerobic digestion. A potential future scenario at the WPWMA facility may include processing food waste and other select organics through anaerobic digestion while continuing to process green waste through composting. The future potential for anaerobic digestion at the WPWMA facility is further discussed in Section 3.5.4, Complementary and Programmatic Elements.

Expanded Organics Management Operation – The existing organics management operation, which uses composting in the northern part of the center property, would be relocated to the central part of the western property and expanded to accommodate anticipated material growth rates, increased organics diversion requirements, food waste and other non-green waste organic materials processing, and improvements in odor control. The existing composting operation currently processes approximately 60,606 tons per year of organic materials (predominately green waste and a relatively small amount of food waste.) Within 30 years (by 2050), the relocated and expanded compost operation is estimated to process a total of 157,900 tons per year of combined green waste, food waste, and other organics.

The relocated composting operation would include an outdoor positive[12] ASP system for the near term that could potentially transition to an outdoor negative[13], or reverse[14], ASP system with an extended bed configuration. The relocated operation would also include an outdoor feedstock receiving and preprocessing area, curing area, screening and product storage area, and dedicated stormwater pond with a geosynthetic liner.

Compostable Material Receiving Operation – Source-separated feedstock (green waste, wood waste, and food waste) would be unloaded directly by customers into outdoor receiving piles: green waste would be unloaded within a green waste receiving area, wood waste would be unloaded within a wood waste receiving area, and food waste would be unloaded adjacent to the preprocessed green waste for expedited mixing and stockpiling. The food waste receiving and preprocessing area would be located within an enclosed space in the future as the WPWMA receives increasing levels of food waste. Each receiving pile or enclosure would be sized to hold the estimated peak design per week tonnage. The WPWMA estimates that a food receiving building would be required when food waste exceeds 30 percent of the total incoming compost feedstock.

Unloading of materials by customers would alternate between piles weekly. Receiving piles in the feedstock receiving areas would be approximately 12 feet high and 75 feet wide, which would allow five customers to unload simultaneously. Customers would unload material on the frontside of the piles, while operations staff would remove material from the backside. The piles would serve as a barrier between customers and operations staff and equipment.

Preprocessing would primarily occur outdoors within the receiving area. Material would be sent through a sort line for visual inspection and to remove contaminants prior to further preprocessing. Visible contaminants would be manually removed and disposed. After the sort line, material would be sent through a tub grinder (or similar size-reducing piece of equipment) for further preprocessing. After grinding, feedstocks would be pushed into piles located adjacent to the receiving piles and away from the customer unloading area.

Grinding operations would alternate between receiving piles weekly, such that the receiving pile that was created the previous period (up to a week) would be ground the following period (up to a week). The grinder would be situated between the receiving pile and the ground material stockpile during operation. Feedstocks would be managed with a front-end loader equipped with an oversized grapple bucket, excavator or similar equipment. A portable misting system would be available for use around the grinder as required.

The relocated composting operation is assumed to eventually include the use of an enclosed food waste receiving and mixing building (as described previously), correlated to increasing amounts of food waste at

[12] ASP composting managed by pushing air through the composting pile.

[13] ASP composting managed by pulling air through the composting pile.

[14] ASP composting managed by either pushing or pulling air through the composting pile. Able to change air flow direction.

the WPWMA facility. However, because the timing of the building construction is not tied to the relocation of the composting operation, there would likely be a period of composting of primarily green waste and food waste that does not include the use of an enclosed receiving area. The use of a receiving building is anticipated to reduce odors associated with food waste. Therefore, for impact evaluation purposes, this EIR evaluates the impacts of operating the composting operation with the addition of minimal food waste (less than 30 percent of total compost feedstock and organic waste and no receiving building) and with increasing levels of food waste (greater than 30 percent of total compost feedstock and organic waste and with a receiving building).

Aerated Static Pile Composting Operation – Material would be moved from the receiving and preprocessing area to the active compost area, using a combination of electrically powered conveyors, conventional or other front-end loaders, or tandem-axle trucks. The ASP composting system is proposed to be sized to provide a minimum 4-week active composting process. It is anticipated that four ASP beds would be provided, each with a capacity of approximately 15,577 cy, and five aeration zones. The ASP composting system would initially be positive ASP but could transition to negative or reversible ASP and would be located outdoors. Fire hydrants would be located near the receiving area in accordance with *California Fire Code* requirements.

Curing Operation – After feedstocks have been stabilized in the active composting system, additional curing would be completed so that the materials meet regulatory and market requirements. First, material would be physically removed from the ASP piles by using a combination of front-end loaders and conveyors and then placed into curing piles. Curing would be completed by using an outdoor static pile system, with an anticipated residence time of 8 weeks. Up to 78 static piles would be provided for curing, with a total capacity of 85,613 cy.

The ASP and static pile (active and curing) systems would be built over a concrete slab. Working areas around the ASP and static pile systems would consist of compacted gravel base or subbase overlain by heavy-duty asphalt or concrete. Concrete and heavy-duty asphalt surfaces would be designed to withstand the weight of wheel loaders and trucks. These surfaces would be designed, constructed, and maintained to provide a durable working surface and protect groundwater.

Post-Curing Composting Operation – Following curing, material would be relocated to a screening and temporary stockpile area, using front-end loaders and electrically powered conveyors. Materials in the temporary stockpile area would be screened by using an electrically powered stationary trommel or star screen with a 20- to 25-cy feed hopper. The screening equipment may be covered by a light-weight steel-fabric structure to allow for continuous operation during rainy periods.

After screening, the finished product would be stockpiled while awaiting shipping to end users. The screening and product storage areas would have a total capacity of approximately 40,000 cy and 14,030 cy per week, respectively. The finished product storage area would have sufficient space to store roughly 2 months' worth of finished product. This would allow for continued operation during slow product marketing periods (e.g., winter months). It would also allow for product to be further cured before it leaves the facility, which may be necessary for certain markets or end uses. Overs (larger pieces that remain from the screening process) could be reused as an amendment for fresh feedstocks, as biofilter material, reprocessed for landscape applications, or used as a biomass fuel.

Compost Pond – The compost pond in the northern part of the center property, east of the MRF, would be removed or repurposed for noncompost leachate use. If removed, the compost pond may be backfilled with clean soil. A new pond on the western property would be constructed and would have sufficient capacity to avoid overtopping in wet weather.

Composting Operation Odor Control – ASP as an active composting method can have positive effects on odor control. Use of positive ASP includes the placement of a 1-foot biofilter layer (typically finished compost) atop the active ASP piles. In the event the positive ASP is transitioned to a negative or reserve ASP process, the process air collected would be treated by using a stand-alone biofilter. The biofilters would consist of a 5-foot-thick layer of coarse wood chips blended with compost overlying a network of air distribution pipes. The biofilters would be situated on an asphalt or concrete pad, which would be sloped (approximately 1 percent slope) for drainage and for the collection of any leachate. Leachate would be directed to an aerated collection pond. Odor control in the curing operation would be achieved through the implementation and maintenance of good operating practices consistent with the SWOP to be implemented for the proposed project (Appendix C.6), and which includes additional BMPs for the composting operation.

Achievement of Project Objectives – The expansion and redesign of the compost operation would help WPWMA achieve several project objectives, including the following:

- Complying with new state regulations related to organics diversion from landfills
- Stabilizing the costs of composting
- Improving operational efficiencies
- Extending the operational life of current WPWMA facilities
- Expanding the diversion of materials from the landfill
- Reducing GHG emissions
- Enhancing public safety by improving internal circulation
- Enhancing operational flexibility
- Continuing to improve compatibility with adjacent land uses by implementing ASP technologies
- Developing the properties in a manner consistent with the Sunset Area Plan

Differences Between MRF Operations RFP Proposals and Plan Concepts – Vendor proposals received in the MRF Operations procurement process include some variations in the types of materials processed at the organics processing area as well as some differences in how that material is processed (MSW organics composting). Generally, the vendor-proposed organics management operation is being designed to accommodate a total tonnage of 157,550 tons per year of organics: 92,450 tons per year of food waste and the organics fraction of MSW (OFMSW) and 65,100 tons per year of yard waste. This is capacity is comparable to the buildout capacity as the Organics Management Operation in Plan Concept 1 and Plan Concept 2. The inclusion of the OFMSW in the proposed feedstocks is one area that the proposals differ from the plan concepts. It is assumed that this material would be recovered during the sorting process inside the MRF building. Recovering this material would also result in higher diversion rates and less material going to the landfill (as either average daily cover or disposed material). Additional features of the Organics Management Operation represented in the proposals is summarized as follows:

- **Location** – The proposals show the Organics Management Operation located on the center property (which is consistent with Plan Concept 1).
- **Processing Technology** – The technology proposed for processing includes a combination of ASP and covered ASP (CASP). Some form of CASP would be used to process the food waste and OFMSW. One of the proposals uses a biolayer (similar to the proposed project) cover, and one uses a membrane cover. The aeration systems proposed for the food waste and OFMSW is either positive or reverse flow. The two proposals use a biolayer cover on the ASP piles that are processing yard waste. ASP is used for curing all organics feedstocks rather than static piles.
- **Feedstock Receiving Building** – One proposal includes an odor-controlled building for receiving and processing yard waste. This differs slightly from the plan concepts, which include the potential future inclusion of a receiving building for food waste.

- **Stormwater Management** – No changes from plan concepts; stormwater would be managed in the same infrastructure and with the same BMPs for compost stormwater.
- **Utilities and Energy** – The capacity of the Organics Management Operations represented in the proposals is essentially equal to the ultimate capacity of this area in the plan concepts. With the addition of the OFMSW, it is assumed that the timeline for this size facility is required sooner, but that the ultimate capacity is the same. While this would result in an increase in energy use in the near term, in the end, the energy and utilities should be equivalent.

Expanded and Redesigned Construction and Demolition Materials Processing Operations

Summary.

Table 3-7 summarizes the existing environmental baseline conditions related to the C&D material processing operation and how implementation of Plan Concept 1 would change those conditions.

Table 3-7. Summary of Expanded and Redesigned Construction and Demolition Material Processing Operations Under Plan Concept 1

Environmental Baseline	Plan Concept 1	Change
C&D materials processing operation in the northern part of the center property	Expanded C&D materials processing operation on the center property	Increase in the size of the C&D materials processing operation by 2 to 3 times on the center property
58,146 tons per year of C&D material processed plus 29,258 tons per year of inerts processed	174,600 tons per year of C&D material processed, plus 55,200 tons per year inerts	Increase of 116,454 tons per year of processed C&D material and 25,942 tons per year inerts

Detailed Description.

The C&D operations area (that includes a covered receiving area and a C&D materials processing line) in the northern part of the center property would be expanded and redesigned to improve operational efficiencies, accommodate growth in the waste stream, and respond to increased state-mandated diversion requirements (e.g., CALGreen Building Standards) and the needs of Participating Agencies. The expanded C&D materials processing operations would cover the area that currently includes the existing C&D operations and existing composting operations to the east of the existing MRF operations. The expanded C&D operations would cover approximately 2 to 3 times the area of the existing C&D operations and would be designed to accommodate new processing equipment capable of handling the projected tonnage. A canopy structure would be constructed to shield the processing area from weather elements.

The existing C&D area processes approximately 58,146 tons of C&D material plus 29,258 tons per year of inerts. Within 30 years, the expanded and redesigned C&D materials processing operation is estimated to process up to 174,600 tons per year of C&D materials.

The C&D materials processing area may also support the receipt, stockpiling, and processing of inert materials. Up to 55,200 tons per year of inert material would be processed at the WPWMA facility by 2050. However, inert materials may also be stockpiled and processed at various areas throughout the site. For example, materials to be used for road base may be stockpiled and processed adjacent to the main onsite landfill haul roads.

Achievement of Project Objectives – The expansion and redesign of the C&D operations would help WPWMA achieve several project objectives, including the following:

- Complying with new state regulations related to C&D material diversion
- Stabilizing the costs of C&D operations
- Improving operational efficiencies
- Extending the operational life of the current WPWMA facility
- Increasing the diversion of materials from the landfill
- Reducing GHG emissions
- Enhancing public safety by improving internal circulation
- Enhancing operational flexibility
- Conducting operations in the most environmentally responsible manner possible
- Developing the properties in a manner consistent with the Sunset Area Plan

Expanded and Redesigned Public Waste Drop-Off Area Operations

Summary.

Table 3-8 summarizes the existing environmental baseline conditions related to public waste drop-off area operations and how implementation of Plan Concept 1 would change those conditions.

Table 3-8. Summary of Expanded and Redesigned Public Waste Drop-Off Area Operations Under Plan Concept 1

Environmental Baseline	Plan Concept 1	Change
Public waste drop-off area in the northern part of the center property includes a public tipping area, drop-off area for buy-back materials and HHW, and an entrance kiosk	The public waste drop-off area would be expanded, redesigned, and relocated to the central part of the western property. New facilities would include a public tipping area, material buy-back center, HHW drop-off area, reuse store, and entrance kiosk with vehicle queuing.	Existing public waste drop-off area relocated, redesigned, and expanded, with the addition of a reuse store.
44,194 tons per year received	Public waste drop-off area operations would receive up to 83,300 tons by 2050	Increase in public waste drop-off area operations by up to 39,106 tons by 2050

Detailed Description.

The existing public waste drop-off area, which consists of a public waste tipping area, buy-back center, and HHW facility, is located in the northern part of the center property. The expanded public waste drop-off area would be redesigned and relocated to the western property to enhance the safety and convenience of public customers by separating them from the more active commercial waste management operations. The public waste drop-off area operations are proposed to include a public waste tipping area, a material buy-back and sales center, an HHW waste drop-off area, a reuse store, and an entrance kiosk with vehicle queuing lanes.

The public waste tipping area currently accepts MSW, C&D, electronic wastes, tires, and appliances. In general, material received at the public waste tipping area may include any of the materials accepted for Waste Recovery or Waste Disposal. These same waste materials would be accepted at the expanded tipping area. The customer unloading area would be a flat slab instead of the current split-grade, Z-wall

configuration for operational safety and flexibility. The tipping floor would have several slots, in an open configuration, for customers to back into and unload their materials. Customers would unload material into piles on one side of the tipping area, while operations staff would remove material from the opposite side. The piles would serve as a barrier between customers and operations staff and equipment. Operations staff would load materials into roll-off bins.

The tipping area and waste handling area would be located on a concrete pad. All other surfaces of the drop-off area would be paved with heavy-duty asphalt. The concrete and heavy-duty asphalt surfaces would be designed, constructed, and maintained to provide a durable working surface and protect groundwater.

Approximately 26 tipping slots would be provided at the public tipping floor for customers to unload MSW, C&D, green waste, and wood waste. Tires would be accepted in 40-cy bins, with loading conducted at grade. Appliances would be accepted at a loading dock and placed onto trailers. Mattresses and carpet would be accepted and placed into 53-foot trailers or 40-cy bins by loaders or forklifts. A roll-off bin truck would be used to transport full bins to the MRF, C&D processing area or organics processing area after being weighed at the scale house.

The buy-back center is currently co-located with the HHW receiving area within the public waste drop-off area and is where clean, source-separated recyclables can be dropped off free of charge, and glass, plastic, and aluminum California Redemption Value (CRV) beverage containers can be turned in for a refund. The HHW receiving area receives hazardous materials from the public and small-quantity generators. These activities would be relocated to the western property and expanded to include a new material buy-back center, a new HHW drop-off area, and a reuse store. The material buy-back center, HHW drop-off area, and reuse store would be located near the entrance kiosk. These facilities are intended to encourage the diversion of waste from the landfill by allowing customers to sell or donate usable items rather than disposing of them, to purchase used items rather than buying new items, and to conveniently drop off HHW and recyclables.

The buy-back center would have approximately six unloading positions, and the HHW drop-off area would have approximately four unloading positions. The reuse store would have parking spots to enable customers to go inside to conduct transactions. Surface water from outside of the public waste drop-off area would be diverted away from the operating areas by using ditches, swales, and berms. Runoff from the public waste drop-off area would be captured through a combination of ditches and swales and would be transferred to the western property's detention pond. Fire hydrants would be located in close proximity to the public waste drop-off area, consistent with *California Fire Code* requirements.

Achievement of Project Objectives – The expansion and redesign of the public waste drop-off area would help WPWMA achieve several project objectives, including the following:

- Stabilizing the costs of waste acceptance activities
- Improving operational efficiencies
- Extending the operational life of the current WPWMA facility
- Increasing the diversion of materials from the landfill
- Reducing GHG emissions
- Enhancing public safety by improving internal circulation
- Improving convenience for public customers
- Enhancing operational flexibility
- Conducting operations in the most environmentally responsible manner possible
- Developing the properties in a manner consistent with the Sunset Area Plan

Environmental Control Measures Implementation

Summary.

Table 3-9 summarizes the existing environmental baseline conditions related to Waste Recovery environmental control measures and how implementation of Plan Concept 1 would change those conditions.

Table 3-9. Summary of Environmental Control Measure Implementation Under Plan Concept 1

Environmental Baseline	Plan Concept 1	Change
Environmental control measures are implemented in a manner consistent with regulations to protect public health and the environment	Expanded Waste Recovery operations would require the continued implementation of environmental control measures, including dust control, litter control, nuisance control, odor control, and load checking	Existing environmental control measures would continue to be implemented with the expanded Waste Recovery operations

Detailed Description.

Existing Waste Recovery environmental control measures are described in Section 1.5.2.5 of Chapter 1, Introduction. Environmental control measures include dust control, litter control, nuisance control, odor monitoring and control, and load checking. These environmental control measures are implemented in accordance with the requirements of *California Code of Regulations* (CCR) Title 27.

With the expansion in Waste Recovery operations at the composting operation, C&D materials processing operations, and public waste drop-off area, the continued implementation of these environmental control measures would be required. Although Waste Recovery operations would expand, no substantial change in these measures or how they would be implemented is expected. However, odor monitoring and control for Waste Recovery operations would be improved by implementing the SWOP, included in Appendix C.6.

Achievement of Project Objectives – The continued implementation of environmental control measures would help the WPWMA achieve the project objectives of conducting operations in the most environmentally responsible manner possible.

3.5.3 Waste Disposal Operations

Waste Disposal operations at the WPWMA facility consist of operation of the WRSL. Plan Concept 1 includes changes to the Waste Disposal operations that occur at the WRSL, including landfill disposal capacity expansion, an increase in the tonnage acceptance limit, the elimination of the permitted vehicle limit, modifications in the landfill environmental monitoring and control systems, and the proposed excavation and relocation of previously disposed waste in areas that do not have a Subtitle D-compliant liner system. These changes are described in Sections 3.5.6 through 3.5.9. Plan Concept 1 does not include any changes in the sources or types of waste accepted, the typical Waste Disposal operations (for example, load checking, daily cover placement, intermediate cover placement), the nuisance control measures (with the exception of improved odor controls with implementation of the SWOP), or the closure plan for the WRSL.

Increased Landfill Waste Disposal

Summary.

Table 3-10 summarizes the existing environmental baseline conditions related to Waste Disposal and how implementation of Plan Concept 1 would change those conditions.

Table 3-10. Summary of Tonnage and Vehicle Limit Changes Under Plan Concept 1

Environmental Baseline	Plan Concept 1	Change
Baseline annual disposed tons = 288,838	Projected annual disposed tons = 533,654	Projected increase in annual tons = 244,816
Material Tonnage Permit Limits	Waste Recovery operations limited to 1,750 tpd; Waste Disposal operations limited to 1,900 tons per day	Sitewide solid waste management activities limited to a rolling 7-day average of 4,000 tpd
Vehicle Permit Limits	Waste Recovery operations limited to 1,014 vehicles per day; Waste Disposal operations limited to 624 vehicles per day	The permitted vehicle limits for Waste Recovery and Waste Disposal operations would be eliminated

Detailed Description.

As illustrated on Figures 1-4 and 3-2, the WPWMA generally projects an average 2 percent annual increase in the amount of waste accepted for disposal at the WRSL over the project period, with interim adjustments in select years to account for increased diversion through improved Waste Recovery capabilities, such as at the Organics Management Operation and the C&D Materials Processing Operation. This estimated increase in the waste stream requiring disposal at the WRSL reflects anticipated regional growth trends, current and future stability and health of recyclables markets and regulatory requirements related to landfill disposal. These future Waste Disposal estimates are independent of any proposed changes to the current WRSL configuration identified in Plan Concept 1. Any considered changes to the WRSL configuration are in response to the estimated growth in the waste stream requiring disposal.

Assuming that the individual daily waste acceptance rates, including the peak acceptance days, also escalate at an average annual rate of 2 percent, the disposal metrics would change as follows:

Waste Disposal Metric	2018 (Actual)	2050 (Estimated)
Average weekday disposal rate	1,113 tons	1,755 tons
Total (annual) waste disposed	294,923 tons	456,400 tons

Source: Oddo, pers. comm. 2020

Achievement of Project Objectives – The increase in the Waste Disposal tonnage limit and the removal of vehicle count limit would help WPWMA achieve several project objectives, including the following:

- Maximizing Waste Disposal capacity to accommodate anticipated long-term growth for as long as possible
- Maintaining a stable and relatively predictable cost structure
- Improving operational efficiencies

Expanded Landfill Disposal Capacity

Summary.

Table 3-11 summarizes the existing environmental baseline conditions related to landfill disposal capacity and how implementation of Plan Concept 1 would change those conditions.

Table 3-11. Summary of the Proposed WRSL Capacity Increase Under Plan Concept 1

Environmental Baseline	Plan Concept 1	Change
Landfill located on the center property	Landfill located on the center and eastern properties	Waste footprint expanded to eastern property
Landfill height – 196 feet above msl. Baseline permitted peak elevation – 295 feet AMSL	Proposed permitted peak landfill elevation – 325 feet AMSL	Height increase above current conditions – 129 feet. Height increase above currently permitted conditions – 30 feet
Permitted Waste Disposal footprint of 231 acres	Proposed Waste Disposal footprint of 320 acres	Increase in Waste Disposal footprint by 89 acres
Permitted capacity = 36.3 million cy	Proposed permitted capacity = 81.4 million cy	Increase in permitted capacity = 45.1 million cy
Waste capacity exhausted in approximately 2058	Waste capacity exhausted in approximately 2101	Estimated 43-year increase in landfill site life
Maximum depth of landfill excavation for module development – 57 feet AMSL	Proposed maximum depth of landfill excavation for module development – 57 feet AMSL	No change in depth of landfill excavation
Eventual relocation of current composting and C&D operations on Module 9 to allow for future development of this module for landfill disposal	Continued use of Module 9 for processing and recycling operations. Module 9 would not be excavated for landfill disposal	Elimination of Module 9 for future Waste Disposal

Detailed Description.

Waste Disposal activities are currently allowed within the boundaries of the existing 231-acre permitted landfill footprint on the center property. Plan Concept 1 includes expanding the WRSL footprint onto the eastern property to create a total contiguous landfill footprint of approximately 320 acres. Plan Concept 1 also includes increasing the permitted height of the WRSL to 325 feet AMSL, or approximately 30 feet above the currently permitted peak elevation of 295 feet AMSL and 129 feet above the WRSL's existing height of 196 feet AMSL (as of aerial mapping dated January 2, 2019).

As of June 30, 2019, the WRSL had a remaining disposal capacity of approximately 23.6 million cy. Based on projected Waste Disposal trends and the currently permitted maximum capacity of approximately 36.3 million cy, the WRSL is estimated to reach final capacity in 2058 (Golder Associates Inc. 2017). With the proposed footprint expansion and height increase, the WRSL's total permitted Waste Disposal capacity would increase by approximately 45.1 million cy to a total of approximately 81.4 million cy. As a result, the WRSL's remaining site life is estimated to extend to approximately the year 2101.

These site life projections are strongly affected by growth in the waste stream. For example, if waste stream growth consistently exceeds the assumed growth rates, then the site life will decrease. Other factors also affect the WRSL's site life, including the refuse-to-soil ratio achieved when applying daily and intermediate soil cover, the recovery rate achieved at the MRF, the tonnage of organics diverted from the landfill, and actual settlement of the waste.

Within the existing WRSL footprint, the pre-landfill-development elevations ranged from approximately 106 feet AMSL in the southwestern corner to approximately 134 feet AMSL in the center part of the site. The maximum depth of landfill excavation within the existing WRSL footprint to accommodate the development of Waste Disposal modules is 57 feet AMSL.

For the eastern property, current ground surface elevations range from 111 feet AMSL along the southern property boundary to 131 feet AMSL in the central part of the property. The maximum depth of landfill excavation proposed within the eastern property to accommodate the development of Waste Disposal modules would be to a depth of 57 feet AMSL. Therefore, there would be no change in the maximum depth of landfill excavation with implementation of Plan Concept 1.

The existing compost and C&D recovery operations located on the part of the WRSL designated as Module 9 are currently planned to be relocated when Module 9 is ultimately needed for Waste Disposal. However, Plan Concept 1 assumes that Module 9 would not be converted to a landfill module in the future but would continue to be used for Waste Recovery operations. Eliminating the use of Module 9 for Waste Disposal operations would reduce the WRSL's currently permitted disposal capacity. However, this reduction would be substantially offset by the additional capacity realized by developing landfill capacity on the eastern property. The total permitted Waste Disposal capacity estimates discussed previously for Plan Concept 1 reflect the increase in capacity associated with the eastern expansion and the capacity reduction caused by the elimination of Module 9.

With the implementation of Plan Concept 1, the additional Waste Disposal capacity provided by an eastern expansion would be available following project approval and the issuance of all applicable permits but would only be developed as needed. Figure 3-3 identifies the anticipated sequence in which existing and future landfill modules would be filled. Based on this anticipated fill sequence, Figure 3-4 identifies the estimated elevation and contours of the existing and expanded WRSL in the year 2050. Figure 3-5 identifies the final elevation and contours of the WRSL once it reaches full capacity, which is estimated to occur in the year 2101.

WRSL Operation Odor Control – As described in Chapter 1 (Section 1.6.3.10), the existing WRSL implements a series of BMPs in order to minimize the potential for offsite odors from aerobic decomposition of waste (primarily from the landfill working face). In addition to the existing BMPs, the WPWMA would implement a SWOP for the proposed project (Appendix C.6), which includes additional BMPs for landfill operation.

Achievement of Project Objectives – The expansion of landfill disposal capacity would help WPWMA achieve several project objectives, including the following:

- Maintaining a stable and relatively predictable cost structure
- Improving operational efficiencies
- Extending the operational life of the current WPWMA facilities
- Increasing the permitted landfill footprint and height to optimize the efficient use of land for Waste Disposal

- Providing sufficient Waste Disposal capacity to accommodate anticipated long-term growth
- Enhancing operational flexibility
- Developing the properties in a manner consistent with the Sunset Area Plan

Landfill Environmental Monitoring and Control Systems

Summary.

Table 3-12 summarizes the existing environmental baseline conditions related to landfill environmental monitoring and control systems and how implementation of Plan Concept 1 would change those conditions.

Table 3-12. Summary of Landfill Environmental Monitoring and Control System Changes Under Plan Concept 1

Environmental Baseline	Plan Concept 1	Change
A combination of non-Subtitle D and Subtitle D-compliant (composite) lined modules exists within the WRSL permitted footprint; double-composite landfill liners will be installed in new modules constructed within the existing permitted landfill footprint	Double-composite landfill liners would be installed in any future modules, consistent with current practice	No changes in the liner systems are proposed with this Plan Concept. Future modules are proposed to include double-composite liners, consistent with current practice
Continued operation of the existing leachate management system, surface water management system, and LFG management system and expansion of these systems within the existing permitted landfill footprint	The environmental management systems would be expanded to accommodate the expanded landfill footprint and height	Expanded environmental management systems to reflect the expanded landfill footprint and height
Environmental monitoring systems and programs are in place in compliance with current regulations for leachate, surface water, groundwater, and perimeter LFG	The environmental monitoring systems and programs would be expanded based on the landfill footprint and applicable regulatory requirements	Expanded environmental monitoring systems and programs to reflect the expanded landfill footprint

Detailed Description.

The existing WRSL incorporates various environmental monitoring and control systems designed to eliminate, minimize, or identify potential environmental impacts and nuisances. The following environmental control systems are integrated into the current WRSL operations and would be expanded as the WRSL footprint expands:

- Double-Composite Landfill Liner System
- Leachate Management System
- Surface Water Management System
- LFG Management System
- Groundwater Monitoring System

Figure 3-3. Plan Concept 1 WRSL Anticipated Fill Sequence
Draft Environmental Impact Report
Renewable Placer: Waste Action Plan
Placer County, California

Jacobs

Notes:

Locations are approximate.

Existing contours based on June 30, 2017 survey.

Estimated Air Space Consumed by 2050
19,500,000 CY

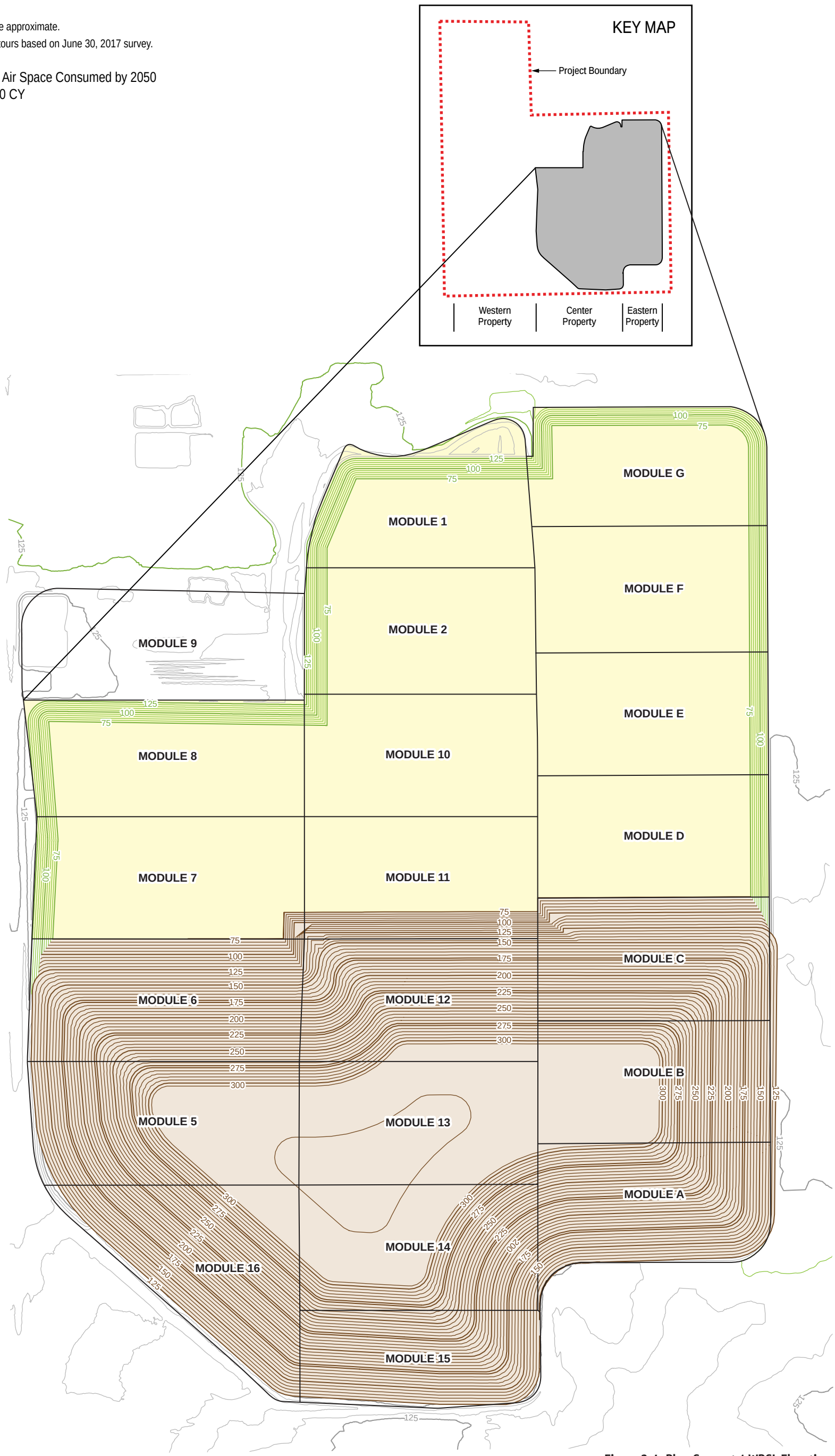

LEGEND

- Existing Contour (5-ft Interval)
- Cut Associated with Future Landfill Modules (5-ft Interval)
- Proposed Contour (5-ft Interval)
- Proposed Fill Area
- Fill Area Available After 2050
- Landfill Module Boundary

BI0213191718SAC 3-4v5

North

0 250 500 750 1,000

Approximate scale in feet

Figure 3-4. Plan Concept 1 WRSL Elevation and Contours Estimated in Year 2050
Draft Environmental Impact Report
Renewable Placer: Waste Action Plan
Placer County, California

Jacobs

Notes:

Locations are approximate.

Existing contours based on June 30, 2017 survey.

Estimated Air Space
81,400,000 CY

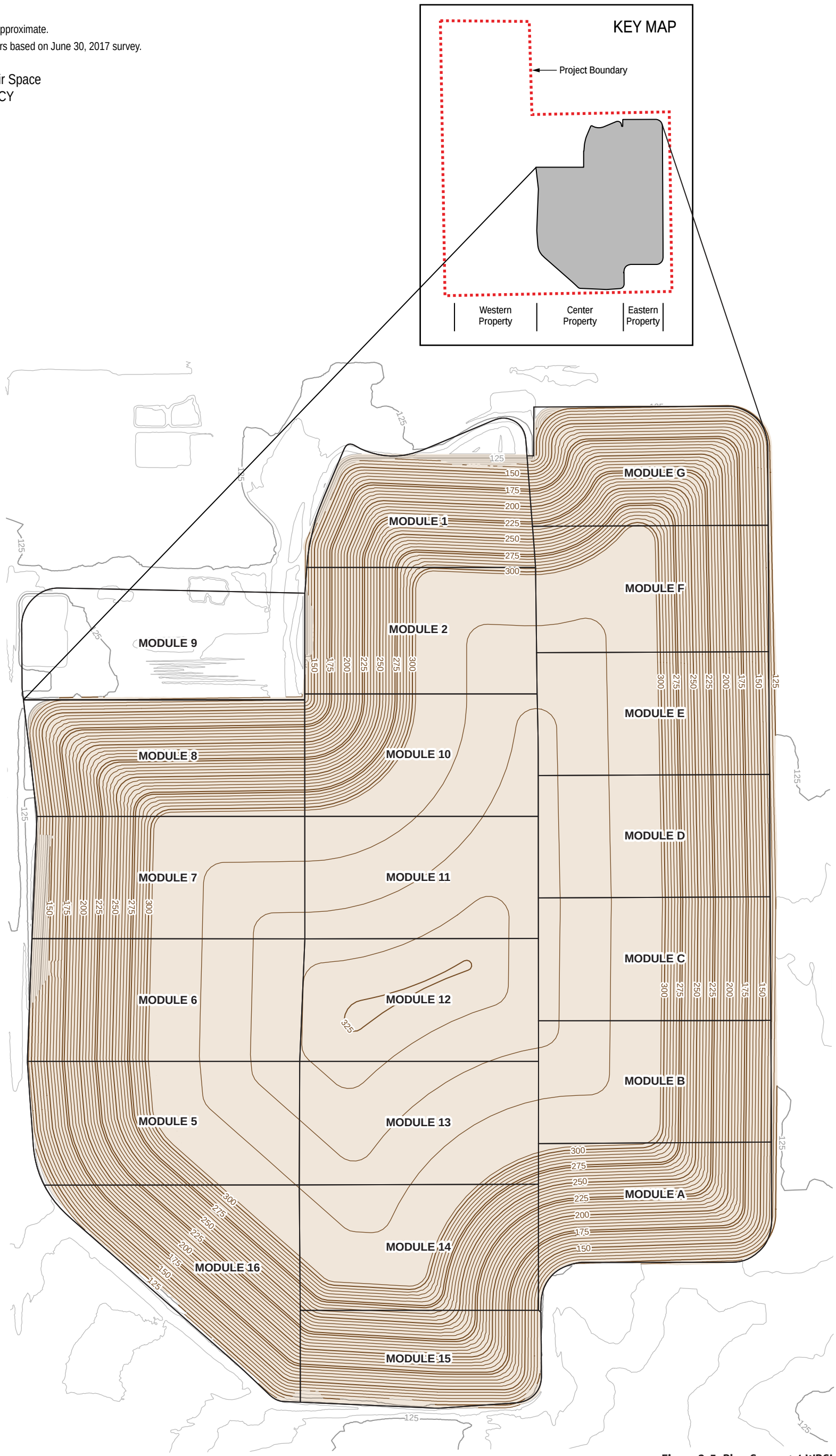

Figure 3-5. Plan Concept 1 WRSL Final Closure Peak Elevation and Contours
Draft Environmental Impact Report
Renewable Placer: Waste Action Plan
Placer County, California

BI0213191718SAC 3-5v4

Jacobs

Environmental monitoring and reporting occurs for leachate, surface water, groundwater, and LFG. Existing environmental monitoring systems for the WRSL are shown on Figure 1-7, and the expansion of these systems for Plan Concept 1 is shown on Figure 3-6.

Double-Composite Landfill Liner System – Landfill liner systems are designed to contain waste materials, including liquids, and prevent them from coming into contact with the underlying soil or groundwater. As described in the Landfill Module Development Phasing discussion included in Chapter 1, the liner systems for the existing modules on the site vary, depending on when they were constructed. Because Modules 1, 2, 10, and 11 were constructed prior to implementation of Subtitle D regulations, they do not have Subtitle D-compliant liner systems. Plan Concept 1 includes excavating and relocating the waste in these modules to a new Subtitle D-compliant, double-composite lined module. The excavation area is proposed to be reengineered to include a Subtitle D-compliant, double-composite liner to accommodate future landfill disposal needs. For more discussion regarding the potential excavation and relocation of waste within Modules 1, 2, 10, and 11, see the discussion of Excavation of Existing Solid Waste (Section 3.5.3.4). In addition, any new modules constructed within the existing permitted landfill footprint or within the expanded footprint proposed on the eastern property would include Subtitle D-compliant, double-composite landfill liner systems. The existing and future liner system is illustrated on Figure 1-8.

Leachate Management System – The leachate collection and removal system (LCRS) is designed to provide efficient collection and removal of liquids that come into contact with and leach through the waste mass (leachate) and meet the requirements of CCR Title 27 and Subtitle D. The LCRS design at the WRSL has evolved over time and differs between the modules, as described in the Landfill Module Development Phasing discussion included in Chapter 1. However, the overall system generally consists a gravel layer as part of the base liner system that serves to direct leachate to a low area, or sump. Riser pipes extend down to the base of the sump and include a dedicated pump to facilitate regular removal of leachate from the landfill. Leachate extracted from the sumps is conveyed through a series of pipes to the sanitary sewer via a maintenance hole located north of the LFG blower and flare station. The expansion of the LCRS associated with landfill expansion would include the extension of the gravel layer of the base liner system and the installation of additional riser and collection pipes. The removed leachate would continue to be conveyed through the expanded collection pipe system to the maintenance hole north of the flare station.

Surface Water Management System – The WRSL's surface water management system consists of drainage ditches, berms, culverts, and down-drains that direct stormwater through a perimeter channel to two existing detention basins, one located in the site's northeastern corner and the other located in the wetland area in the site's southwestern corner. Similar surface water control infrastructure would be installed for the expanded landfill. This infrastructure would include drainage ditches, berms, culverts, down-drains, and perimeter channels. Additional stormwater detention ponds would also be installed, as described in the discussion of supporting facilities. This stormwater management infrastructure would be sized to accommodate the 1,000-year, 24-hour storm event as required by Title 27 CCR §20365. The detention basins would be designed to release controlled flows into existing offsite drainage channels, as required by Placer County standards.

Landfill Gas Management System – Anaerobic bacterial digestion of buried waste produces LFG. Only the organic fraction of the landfilled waste will decompose and produce LFG. LFG is composed predominately of equal parts methane and carbon dioxide, both odorless gasses. LFG also includes trace amounts of volatile organic compounds (VOCs), sulfur-based compounds, and ammonia, all of which can contribute to LFG odors. The WRSL's LFG management system, described in Section 1.3.6.9, would be expanded as the WRSL expands, including the construction of additional LFG extraction wells and support structures and facilities. Figure 3-6 shows the anticipated expansion of the LFG management system. While the enclosed ground flare is currently sized to combust all LFG generated by the current landfill when needed (and will

be upgraded as necessary in the future), WPWMA intends to continue using the LFG to produce and sell electricity (currently via a third-party energy developer) as a beneficial reuse. In addition, a component of Plant Concept 1 includes the possible construction of an LFG-to-compressed natural gas facility, hydrogen, or other renewable fuel on the western property (Figure 3-1). This facility is described in more detail under the discussion of complementary and programmatic elements. With the installation of this facility, WPWMA would have the ability to produce and sell vehicle-grade or pipeline-grade compressed natural gas, hydrogen or other renewable fuels.

As described in Chapter 1 (Section 1.6.3.10), the WPWMA implements BMPs to minimize the potential for offsite odors from LFG. In addition to the existing BMPs, the WPWMA would implement a SWOP for the proposed project (Appendix C.6), which includes additional BMPs for WPWMA's LFG management system.

Groundwater Monitoring System – Groundwater monitoring is performed on a quarterly basis at the WRSL in accordance with the Monitoring and Reporting Program (MRP) described in WDR Order No. R5-2007-0047 (CVRWQCB 2007). The groundwater monitoring network consists of 39 groundwater monitoring wells across the site as follows:

- 12 wells associated with the Corrective Action Program (CAP) (MW-5, CW-5S, CW-5M, CW-5D, MW-9, CW-9S, CW-9M, CW-9D, MW-10, MW-11R, MW-13, and MW-23R) sampled quarterly
- 24 downgradient wells associated with the Detection Monitoring Program (MW-2, MW-3, MW-6, MW-7, CW-7S, CW-7M, CW-7D, MW-8, MW-12, MW-14 through MW-18, CW-19S, CW-19M, CW-19D, MW-22, MW-24, CW-25S, CW-25M, and CS-25D sampled semiannually, and MW-19 and MW-20 sampled quarterly)
- 2 upgradient (background) wells (LW-1 and MW-4) sampled annually
- Well MW-1 used for water level monitoring only

The 15 "CW" cluster wells were installed to monitor the shallow (-S), intermediate (-M), and deep (-D) intervals of the uppermost water-bearing zone and are sampled by using a portable electric submersible pump. All other monitoring wells are screened in the uppermost water-bearing zone and, with the exception of well LW-1, are equipped with a dedicated submersible pump used for purging and to retrieve groundwater samples. Well LW-1 is purged and sampled by using a disposable bailer. A similar and expanded groundwater monitoring system would be installed to accommodate the expansion of the WRSL.

Achievement of Project Objectives – The proposed changes to the landfill environmental monitoring and control systems would help WPWMA achieve project objectives, including the following:

- Complying with applicable regulations
- Conducting operations in the most environmentally responsible manner possible

Notes:

Locations are approximate.

Existing contours based on June 30, 2017 survey.

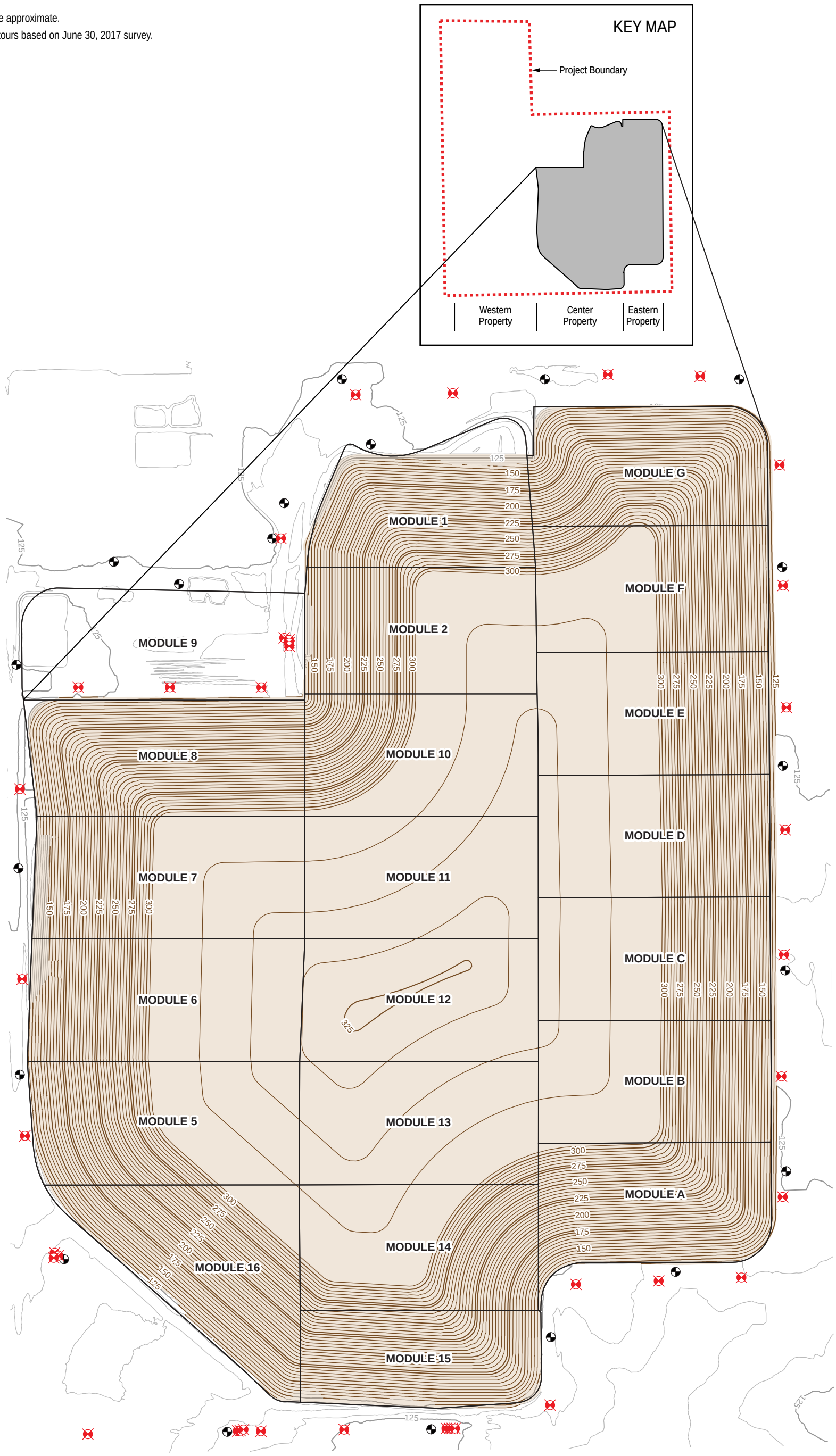

BI0213191718SAC 3-6v4

Figure 3-6. Plan Concept 1 WRSL Environmental Monitoring Systems

Draft Environmental Impact Report

Renewable Placer: Waste Action Plan

Placer County, California

Jacobs

Excavation of Existing Solid Waste

Summary.

Table 3-13 summarizes the existing environmental baseline conditions related to excavation of existing solid waste and how implementation of Plan Concept 1 would change those conditions.

Table 3-13. Summary of Solid Waste Excavation Changes Under Plan Concept 1

Environmental Baseline	Plan Concept 1	Change
Modules 1, 2, 10, and 11 are closed, and no additional waste will be placed in these modules	Modules 1, 2, 10, and 11 would be excavated and the contents relocated to an onsite Subtitle D-compliant module; Excavated modules would be lined with a Subtitle D-compliant liner and reused for future Waste Disposal when needed	Buried waste would be excavated and relocated; Excavated modules would be reused for Waste Disposal
Peak elevations of Modules 1, 2, 10, and 11 do not exceed approximately 170 feet AMSL	Peak elevations of reused Modules 1, 2, 10, and 11 would increase to between 320 and 325 feet, depending upon the individual module	Increase in peak elevations of between 150 and 155 feet for Modules 1, 2, 10, and 11

Detailed Description.

Physical Waste Relocation Activities – Plan Concept 1 includes excavating the contents of Modules 1, 2, 10, and 11, which encompass approximately 66 acres, and relocating the contents to a Subtitle D-compliant lined module within the permitted landfill footprint.

Waste relocation activities at the pre-Subtitle D area would include removal of leachate and LFG collection infrastructure, buried waste, soil cover, and as appropriate, any underlying soils affected by a release from the landfill and posing a threat to water quality or the environment. The estimated total volume of waste material within the pre-Subtitle D modules is 3,646,000 cy (Golder Associates Inc. 2018). This includes final cover soils, Class III nonhazardous solid waste, and daily and interim soil cover. The Class III nonhazardous solid waste is assumed to include mixed municipal wastes, C&D debris, yard wastes and rubbish, and inert materials such as concrete and white goods (for example, appliances) (Golder Associates Inc. 2018). The relocation of the contents of these modules to new modules is estimated to require a total of 300 days to complete but may be implemented in phases (Golder Associates Inc. 2018). Although the excavation of these modules would not need to occur immediately under Plan Concept 1 and could be delayed until the additional landfill capacity is needed, this EIR assumes these activities would occur from 2045 to 2050, although WPWMA may proceed sooner with the excavation, based on economic, technical, or environmental factors.

A contractor is likely to be hired to conduct the excavation activities and would be responsible for identifying, on a daily basis, the area of excavation and for stripping the existing final cover soils that are not affected by waste. The contractor would stockpile these soils in a designated area. The contractor would excavate the remainder of the contents, including waste and commingled cover soils, and place them into trucks for transport to the designated disposal areas onsite. WPWMA staff would be responsible for confirming that the waste materials are disposed in conformance with site permits and applicable laws and regulations. Excavation would proceed until reaching the base of waste. The excavation would

progress laterally across the designated excavation area. Trained personnel provided by the contractor would observe the excavation process to identify any nonconforming waste materials, including hazardous waste, which would be sent offsite for proper handling and would not be relocated to an onsite landfill module for reburial. Trained personnel provided by the contractor would also observe the exposed subgrade soils to identify any areas that may be affected by a release from the landfill (Golder Associates Inc. 2018).

Available geologic information indicates that the pre-Subtitle D area lies primarily above stream-laid alluvial deposits of arkosic gravel, sand, silt, and clay. In some areas, it is anticipated that excavation would extend into the underlying gravel, sand, silt, and clays. Actual grades and conditions may vary and would be determined at the time of excavation. Anticipated excavation depths range from 10 to 66 feet, based on available information. Waste relocation activities would include excavation and stockpiling of almost 428,000 cy of final cover soil that is not anticipated to be significantly affected by waste materials (Golder Associates Inc. 2018). The clean cover soils would be reused elsewhere on the site as landfill cover or as temporary fill in excavated areas.

The contractor would be responsible for covering exposed waste at the end of each work day with a minimum of 6 inches of compacted earthen material or an approved alternative daily cover (such as tarps) to control vectors, fires, odors, blowing litter, and scavenging. The contractor would place intermediate cover over exposed waste and temporary waste slopes where no additional waste excavation or waste relocation work would occur within 180 days. Intermediate cover would consist of a minimum 1-foot-thick layer of compacted earthen material, including daily cover soil. There are no approved alternative materials for intermediate cover. The intermediate cover would protect otherwise exposed waste, thereby controlling vectors, fires, odors, blowing litter, and scavenging during any potential lapses in waste relocation activities (Golder Associates Inc. 2018).

The contractor would provide for positive drainage at the top of excavation slopes to control stormwater run-on into the excavation. The remaining excavation would be graded such that precipitation from the 100-year, 24-hour design storm would drain and prevent water from rising above the waste at the toe of the temporary waste slope. This would prevent ponding water from posing a threat for seeping into buried waste and causing a potential for leachate development. WPWMA personnel or their designee also would visit the site after qualifying precipitation events and at least once a week in the wet season and verify that ponded water is pumped to stormwater if clean or to sewer if not, as needed. Slopes that would be cut from native soils would be constructed without intermediate cover (Golder Associates Inc. 2018).

Excavated areas to be developed with a Subtitle D composite liner system would be graded at roughly 1.5 to 3.5 percent to flow to the eastern central edge of the excavation. Slopes would be seeded at the conclusion of construction to control erosion. Additional erosion controls such as diversion berms, hay bales, and straw wattles would be used as necessary during construction in accordance with applicable surface water pollution prevention plans (Golder Associates Inc. 2018).

Although it is anticipated that primarily MSW would be encountered, there is the potential to encounter hazardous or nonconforming wastes during the waste relocation. Hazardous wastes are defined in Title 22 of the CCR Section 66261.3. Hazardous wastes have the following characteristics:

- They are ignitable, corrosive, reactive, or toxic.
- They have the potential to cause or significantly contribute to an increase in mortality or an increase in serious irreversible or incapacitating reversible illness.
- They have the potential to pose a substantial present or potential hazard to human health or the environment, because of factors including their carcinogenicity, acute toxicity, chronic toxicity,

bioaccumulative properties, or persistence in the environment, when improperly treated, stored, transported, or disposed of, or otherwise managed.

Nonconforming wastes comprise other waste material that is not accepted at the landfill, excluding hazardous waste, and include the following:

- Wastes containing soluble pollutants in concentrations that exceed applicable water quality objectives, or that could cause degradation of waters of the state, according to *California Water Code* Section 13173.
- Cathode ray tubes from televisions and computer monitors.
- Electronic wastes such as televisions and refrigerators.

The contractor would be required to develop and implement a contingency plan in the event that hazardous or nonconforming wastes are encountered during waste relocation. The contractor would be required to base the contingency plan on guidelines issued by the State of California Governor's Office of Emergency Services (CA OES 2001).

Waste Excavation Odor Control – The BMPs included in the SWOP (Appendix C.6) to be implemented for the proposed project associated with landfill operation would apply to waste excavation activities.

Reuse of Excavated Waste Modules – Because Modules 1, 2, 10, and 11 have been closed, they have reached their peak elevation of approximately 170 feet AMSL, and no additional waste can be placed on top of the modules. However, if the waste is removed from these modules, they can be reused for Waste Disposal with the installation of a Subtitle D-compliant liner system. Plan Concept 1 includes reusing the excavated modules for Waste Disposal. Through this reuse, the peak elevation of these modules would increase to match the elevations of the other landfill modules. As a result of reusing these modules, the WRSL's total disposal capacity would increase because the peak elevation of these modules would be substantially higher once refilled (that is, up to 325 feet versus 170 feet AMSL).

Achievement of Project Objectives – The excavation of existing solid waste would help the WPWMA achieve several project objectives, including the following:

- Maintaining a stable and relatively predictable cost structure
- Extending the operational life of the current WPWMA facility
- Increasing the height of parts of the landfill to optimize the efficient use of land for Waste Disposal
- Providing sufficient Waste Disposal capacity to accommodate anticipated long-term growth

3.5.4 Complementary and Programmatic Elements

Summary

Table 3-14 summarizes the existing environmental baseline conditions related to complementary and programmatic elements and how implementation of Plan Concept 1 would change those conditions. Plan Concept 1 generally locates the 1.9 million square feet of complementary elements on the northern and southern extents of the western property, with some activities on the center property. For purposes of this EIR, up to 300,000 square feet of building associated with the complementary elements plus associated outdoor infrastructure are considered at a project level. For purposes of analysis, these industrial uses are assumed to be located on the northern part of the western property (Figure 3-1).

Table 3-14. Summary of Complementary and Programmatic Elements Under Plan Concept 1

Environmental Baseline	Plan Concept 1	Change
Grazing operations on the eastern property, solid waste operations on the center property, and irrigation and model airplane operations on the western property	Project Level – Development of up to 300,000 square feet of building plus exterior infrastructure for complementary solid waste management elements. Industrial uses may include compatible technologies, pilot study areas, university research areas, and an LFG to compressed natural gas area Program Level – Up to 1.6 million square feet of industrial uses that are complementary to the solid waste management elements	Project Level – Development of up to 300,000 square feet of industrial uses Program Level – Development of up to 1.6 million square feet of industrial uses
	Project Level – Located on the northern part of the western property, plus locations on the center property Program Level – Primarily in the northern and southern parts of the western property, plus locations on the center property; although some uses may be developed in closer proximity to the solid waste project elements or within areas not yet developed with solid waste project elements	Project Level – Complementary and programmatic elements primarily in the northern part of the western property Program Level – Complementary and programmatic elements primarily on the northern and southern part of the western property, plus locations on the center property

Detailed Description

The complementary and programmatic elements include the development of compatible technologies, pilot study areas, university research areas, and a LFG to compressed natural gas, hydrogen or other renewable fuel production and vehicle-fueling area. On the project level, these are assumed to be located on the northern part of the western property and may include compatible technologies or pilot studies. On a program level, areas have been designated in the northern and southern parts of the western property to accommodate development of compatible technologies and university research uses. Potential pilot studies are proposed to be located in these areas in addition to areas east of the MRF operations on the center property. The LFG to compressed natural gas, hydrogen, or other renewable fuel-production and vehicle-fueling area is proposed to be located in the southern part of the western property.

The complementary and programmatic elements are anticipated to include solid waste-oriented industrial uses that could include warehouses, light-manufacturing plants, processing plants, research and development labs, offices, and other supporting infrastructure. The allowable uses are dictated by the site's land use and zoning designations identified in the Sunset Area Plan (Placer County 2018). The applicable Sunset Area Plan goals, policies, design guidelines, and land use and zoning designations are described in detail in the following subsection.

Although space has been reserved for these elements primarily within the western property, opportunities may arise that would support locating some of these complementary and programmatic elements in closer proximity to the solid waste project elements or within areas not yet developed with solid waste project elements. Additionally, the entire site includes a single land use designation (Eco-Industrial/ Manufacturing/WPWMA District [EI]) and a single zoning designation (Eco-Industrial [ECO]). Therefore, the uses allowed within those land use and zoning designations are presumed to be acceptable anywhere on the site that does not include a conflicting use (for example, the permitted Waste Disposal area). These designations are defined in detail in the following subsection.

Sunset Area Plan. The project site is located within the center of the Sunset Area, which includes 13.9 square miles of land situated between the cities of Rocklin to the east, Roseville to the south, Lincoln to the north, and unincorporated Placer County to the west. In 2018, the County developed the Sunset Area Plan. The vision of the Sunset Area Plan is to take advantage of opportunities to create a unique employment, entertainment, and education center that will provide regional benefit, create primary-wage earner jobs for residents of nearby cities and unincorporated areas, and help generate revenue to fund countywide services.

The Sunset Area Plan identifies goals, policies, implementation programs, and standards for a wide range of issues affecting the use of land within the Sunset Area. It also includes a Land Use Diagram, which specifies the type, location, and intensity of development within the Plan Area. In addition to a policy document that identifies applicable policies for the area, the Sunset Area Plan includes separately published Implementing Zoning Regulations and Corridor Design Standards and Guidelines. These regulations, standards, and guidelines specify the details that are intended to make certain that new development delivers on the vision of the Sunset Area Plan (Placer County 2018).

The Sunset Area Plan Land Use Diagram identifies the land use designation for the project site as EI. The land use designations of the Sunset Area Plan are intended to be broad to allow for flexibility in implementation. The EI designation provides for solid waste-related management, processing, recycling, and composting operations, as well as industrial and manufacturing uses focused on alternative waste-to-energy technologies, recovery and reuse of materials, solid waste-related research and development, and related advanced manufacturing, perhaps in conjunction with nearby universities. Typical uses permitted under the EI designation are as follows:

- Manufacturing and remanufacturing, including advanced materials
- C&D debris recycling
- Plastics processing (grinding, washing, pelletizing, molding)
- Paper conversion
- Wood salvage and remilling
- Glass processing and manufacturing
- Scrap tire recycling and baling
- Electronics repair, de-manufacturing, recycling
- Nonprofit or small industry incubator
- Landfill operations
- Necessary public utility and safety facilities

The Sunset Area Plan goal and policies specifically applicable to the EI land use designation include the following:

- Goal LU/ED-6: Eco-Industrial. To support WPWMA's efforts to diversify and expand its operations while protecting the viability of its facilities.

- Policy LU/ED-6.1: Innovation/Research and Development. The County will support WPWMA initiatives to establish industrial and manufacturing uses focused on alternative waste-to-energy technologies, recovery and reuse of materials, solid waste-related research and development, and related advanced manufacturing. This includes efforts to collaborate with nearby universities to advance state-of-the-art approaches to these activities.
- Policy LU/ED-6.2: Land Use Changes near WPWMA facilities. When considering land use changes near the WRSL and the WPWMA MRF operation, the County will consider the regional value of these solid waste facilities and operations. To protect these facilities and operations from incompatible encroachment, as well as to protect new uses from nuisances generated by the landfill and MRF, new development will be reviewed and approved on a project-by-project basis, considering proximity to the active operation of these facilities and predicated on the new development's ability to comply with the standards specified in Table 1-3 of this Plan.
- Policy LU/ED-6.3: WPWMA Land Use Compatibility. The County will encourage businesses that are compatible with WPWMA land uses, such as businesses focused on the collection and conversion of waste, including biomass and production of organics for composting and mulching to be located in the Eco-Industrial District.
- Policy LU/ED-6.4: Composting Materials. The County will encourage production of composting materials that meet standards to be used for applications such as landscaping and rural lands.

The County has also developed zoning regulations and development standards and design guidelines that are designed to specify in greater detail how the land use designations and policies of the Sunset Area Plan will be implemented. The Sunset Area Plan Implementing Zone Regulations include a Zoning Map that identifies the project site zoning as ECO. The intent of the ECO Zone is to provide areas for industrial uses that emphasize ecology, waste reuse and sustainable salvaging, and remanufacturing. Remanufacturing uses are defined as operations that produce consumer products with recycled content that can include, for example, facilities that manufacture cardboard boxes made from recycled paper or facilities that produce picnic tables made of recycled plastic pellets. This zone directly serves and is compatible with the ongoing operation of the landfill. The uses in this zone are intended to allow for manufacturing and remanufacturing, recycling of C&D debris, plastics processing, paper conversion, glass processing, and similar industrial uses.

Sunset Area Plan Preliminary Phasing and Building Assumptions. Placer County prepares Area Plans to guide land use development in key areas and communities in unincorporated areas of the County. The intent of these area or community plans is to give clear direction regarding physical development and land use decisions over a 20-year horizon. As such, the Sunset Area Plan is a policy document intended to guide development over the next 20 years.

As part of a background report prepared during the development of the Sunset Area Plan, Economic & Planning Systems (EPS) prepared a market analysis in August 2015 to establish an economic context and estimate market support for ongoing land use development in the Sunset Area. EPS used forecasts of industry employment in the region to estimate a potential range of acreage supportable from demand for land uses over the next 20 years. EPS's market analysis estimated net land demand for industrial and flex, office, ancillary retail, and entertainment mixed-use uses, providing a range of potential acreage absorbed annually over a 20-year period (Placer County 2018).

Following preparation of the background report and market analysis, the County established an updated land use plan reflecting buildout of the Sunset Area Plan. Based on market analysis findings regarding absorption, EPS estimated that the Sunset Area Plan has a development holding capacity that may span over 80 years. Based on this estimate, the land use plan was delineated into two phases: Phase 1, which

identified the estimated market demand for development that could occur within a 20-year plan horizon; and Phase 2, which identified the remaining land development likely to occur beyond a 20-year plan horizon (Ascent Environmental 2018).

EPS's annual acreage absorption estimates for industrial uses were based on historical absorption in the region, a quantitative analysis of employment projections, and potential capture within the project area. Over the Phase 1 development period for the Sunset Area Plan, EPS estimated that 5,183,000 square feet of industrial development would be built (Table 3-3, Ascent Environmental 2018). This estimate assumed that the Placer Ranch Specific Plan area would be fully built out in Phase 1 and would include 1,658,000 square feet of industrial uses. The remaining 3,525,000 square feet of industrial development was assumed to be split between the project site and the light industrial-designated area located east of the project site and adjacent to Industrial Boulevard. If these industrial areas develop over the 20-year Phase 1 planning period in proportion to their available designated acreages, approximately 55.3 percent, or 1,946,325 square feet, of industrial uses would be developed on the project site.

For consistency with the development assumptions included in the Sunset Area Plan, Plan Concept 1 assumes 1,946,325 square feet (300,000 square feet for the project level and the remaining 1.6 million square feet for the program level) of industrial uses would be developed on the project site within the timeframe of the Waste Action Plan implementation, which extends to 2050.

The vast majority of these industrial uses would be constructed within the areas designated for complementary and programmatic elements, as shown on Figure 3-1. However, as previously discussed, opportunities may arise that would support locating some of these industrial uses in closer proximity to the solid waste project elements or within areas not yet developed with solid waste project elements. Therefore, this plan concept assumes these industrial uses could be located anywhere on the project site that does not include a conflicting use.

Potential Compatible Technology Development. The WPWMA has been approached by several companies interested in developing compatible technologies at the site. The types of projects identified by these companies have varied, including wood biomass conversion facilities, anaerobic digesters, organic waste-to-energy projects, the use of pyrolysis, and plastics recycling technologies. One such technology includes producing bioplastics from the acids that are generated by the anaerobic digestion process. These bioplastics can further be converted to energy by feeding them back to the digesters to make biogas. By locating adjacent to the WPWMA's solid waste operations, organic materials would be available to support anaerobic facilities, and the chemicals and energy from these anaerobic facilities could be used to manufacture green products such as bioplastics for food packaging. The scale of these compatible technology facilities can vary substantially, depending upon the volume of material available from the WPWMA solid waste operations. Any of the potential compatible technologies would need to be consistent with the land use and zoning designations identified in the Sunset Area Plan and would need to be compatible with the WPWMA's ongoing solid waste operations at the site.

As discussed in Section 3.5.2.2 and the previous paragraph, the WPWMA may choose in the future to manage the food waste portion (and potentially other portions) of the organics management operation through anaerobic digestion or other noncomposting technology. Two CalRecycle Program EIRs have been prepared to facilitate the future development of an anaerobic digester. The first of these, prepared in 2011, is the *Program Environmental Impact Report for Statewide Anaerobic Digester Facilities for the Treatment of Municipal Organic Solid Waste*. The CalRecycle policy recognizes that organic wastes are a resource, not just solid wastes that must be disposed. Organic wastes have an energy value that can be captured and used, and they are also a necessary component of compost, soil amendments, and other useful products. The Final Program EIR and associated background and guidance documents can be found

on the CalRecycle website:
http://calrecycle.ca.gov/SWFacilities/Compostables/AnaerobicDig/default.htm#EIR.

The second Program EIR prepared by CalRecycle in 2019 is the Program EIR for SB 1383 Regulations titled *Short-Lived Climate Pollutants: Organic Waste Methane Emission Reduction*. SB 1383 requires redirection of a substantial amount of organic waste from landfill disposal. An estimated 26.8 million tons of organic waste in the state would need to be redirected from landfill disposal in 2025, with the amount of material to be redirected to increase in the years thereafter. The Program EIR was prepared to analyze the potential environmental impacts of implementing the SB 1383 regulations. CalRecycle considered a number of reasonably foreseeable compliance responses associated with implementation of SB 1383 regulations. Among these responses is that the redirection of organic waste from landfills would be reasonably expected to result in the development of new or expanded organic Waste Recovery and edible food recovery facilities in the state. The Program EIR considers the following significant types of compliance responses for the management of food waste: compost, anaerobic digestion, chipping and grinding, and recycling. The Final Program EIR and associated background and guidance documents can be found on the CalRecycle website: https://www.calrecycle.ca.gov/laws/rulemaking/archive/2020/slcp.

If the WPWMA or a third party were to pursue an anaerobic digestion project at the WPWMA facility as part of the space identified for complementary technologies, the required site-specific analysis under the California Environmental Quality Act (CEQA) for such a project could be a tiered document that uses the 2011 CalRecycle Program EIR, the 2019 CalRecycle Program EIR, and this project EIR.

Long-term Development Assumptions. During Phase 2, the Sunset Area Plan EIR estimated that a total of 7,916,600 square feet of industrial development would occur on the project site at full buildout, including the 1,946,325 square feet associated with Phase 1. Full buildout was estimated to take approximately 80 years to complete (Table 4.14-17, Ascent Environmental 2018). This estimate assumes that 605.8 acres of the site would be developed with industrial uses with a floor area ratio of 0.3 (Ascent Environmental 2018).

The Sunset Area Plan EIR programmatically evaluated the impacts associated with developing this level of industrial uses on the project site. This DEIR incorporates by reference the programmatic analysis of the Phase 2 industrial development included in the Sunset Area Plan EIR. However, because the square footage of industrial development identified in Phase 1 would be sufficient to meet the project objectives and the industrial demand beyond 2050 would be speculative, the implementation of Phase 2 development assumptions on the project site are not considered a component of Plan Concept 1.

Achievement of Project Objectives. The complementary and programmatic elements would help the WPWMA achieve several project objectives, including the following:

- Maintaining a stable and relatively predictable cost structure
- Expanding the diversion of materials from the landfill
- Reducing GHG emissions
- Enhancing operational flexibility
- Conducting operations in the most environmentally responsible manner possible
- Facilitating the siting and development of compatible technologies that would benefit from proximity to the WPWMA
- Developing the properties in a manner consistent with the Sunset Area Plan

3.5.5 Supporting Elements

Summary

Table 3-15 summarizes existing environmental baseline conditions related to supporting elements and how implementation of Plan Concept 1 would change those conditions.

Table 3-15. Summary of Supporting Elements Under Plan Concept 1

Environmental Baseline	Plan Concept 1	Change
Materials recovered from the MRF operations are stored either within or outside of the MRF building, depending on space constraints	New recovered materials storage building, approximately 70,000 square feet	Construction of a new building and increased ability to store recovered materials inside
Stormwater ponds on center property	New and expanded stormwater ponds on western, center, and eastern properties	Additional stormwater ponds associated with expanded solid waste operations
Road crossings between center and western property limited to public roads	Separated crossing of Fiddyment Road that would connect center and western properties	Improved access for solid waste operations between center and western properties
Maintenance facility on the center property	Center property maintenance facility would be upgraded, and a new satellite maintenance facility would be constructed on the western property for compost and public waste drop-off operations	Upgraded maintenance facility on center property and new satellite maintenance facility on western property
Administration building on the center property	New administration building with education center and parking	A second administration building with an education center and parking
Entrance facilities on Athens Avenue	Upgraded Athens Avenue entrance facilities when needed	Improved site access and scale house infrastructure
Restricted dirt road access to western property at Fiddyment Road and Athens Avenue intersection	New paved site entrance to western property at Fiddyment Road and Athens Avenue intersection	Public access to the solid waste operations on the western property
Wastewater and fire protection water line used for the existing public waste drop-off area operations	A new wastewater and new fire protection water line extending to the western property would be necessary to service the relocated public waste drop-off area operations	Installation of new wastewater and fire protection water line in Fiddyment Road or Athens Avenue
LFG-to-energy plant operations on center property	Continued LFG-to-energy plant operations on the center property	No change in LFG-to-energy plant operations
Landscaping and fencing located along sections of the center property	Landscaping and fencing would surround entire project site	Expanded perimeter landscaping and fencing

Detailed Description

The WPWMA facility currently includes a number of elements that support ongoing solid waste operations at the site. These existing elements are primarily located in the northern part of the center property (Figure 1-3). Plan Concept 1 (Figure 3-1) includes modifications to many of these elements and the addition of new elements. These supporting elements are described in further detail as follows and include recovered materials storage areas, stormwater ponds, a road crossing, maintenance areas, administration buildings, facility parking, entrance facilities, wastewater and water supply infrastructure, the existing LFG-to-energy plant, and site perimeter infrastructure.

Recovered Materials Storage Building – When materials recovered from the MRF operations exceed the capacity of storage areas within the MRF building, they are stored outside. The outside storage of these materials can degrade their value as a result of weather exposure and can also have stormwater impacts. The construction of a recovered materials storage building is proposed to protect recovered MRF materials from weather exposure prior to being transported offsite as well as to keep stormwater from contacting these materials. The enclosed storage building would be approximately 70,000 square feet in size and would be located generally to the east of the existing MRF building.

Stormwater Ponds – The project site includes two existing stormwater ponds: one located in the northeastern corner of the center property and one located directly east of the existing MRF building. The site also includes two compost leachate retention basins adjacent to the existing composting operations in the northern part of the center property. Plan Concept 1 proposes to relocate the stormwater pond located directly east of the MRF building and to construct additional stormwater ponds throughout the site. New stormwater ponds are currently proposed at the southern end of the eastern property, at the northern and southwestern ends of the center property, and within the central area of the western property. However, the locations of these ponds may vary depending on how the solid waste elements are built out. The ponds that would capture stormwater from the relocated composting, public waste drop-off, and C&D areas would be sized based on a 100-year, 24-hour intensity precipitation event, and the landfill stormwater ponds would be sized for a 1,000-year, 24-hour intensity precipitation event, consistent with Class II landfill requirements.

Road Crossing – On Fiddyment Road, south of Athens Avenue, a new separated road crossing is proposed to be installed to connect the waste operations on the center property to those proposed on the western property. The purpose of this crossing is to allow WPWMA and operator staff to easily transport materials across Fiddyment Road between the center property and western property while avoiding driving solid waste vehicles on public roads. A number of crossing alternatives are being considered, including under crossings with and without retaining walls, overcrossings with and without retaining walls, and a conveyor system for transporting materials. The following initial assumptions were used for these vehicle crossings (however, they would be built to County standards). Vehicle crossings are assumed to include two 12-foot lanes with 4-foot shoulders and a 25-mile-per-hour design speed. If an overcrossing is built, it would include 16 feet 6 inches of vertical clearance. Because the WPWMA has not yet selected a preferred road crossing, all three of these options are being evaluated in this EIR.

Maintenance Areas – The existing maintenance facility on the center property is proposed to be upgraded to support the expanded solid waste operations. This upgrade includes constructing an approximately 12,000-square foot building with expanded pad space. A second satellite maintenance facility is proposed in the central part of the western property to support composting and public waste drop-off area operations. This satellite maintenance facility would include an 8,500-square foot building with space for administrative offices and parking.

Administration Building and Parking – A new or expanded administration building is proposed near the existing administration building in the northwestern corner of the center property to accommodate additional staff offices and parking. A new building would contain approximately 12,400 square feet, including approximately 2,400 square feet for an education center, and an approximately 25,000-square foot parking area.

Entrances – The existing Athens Avenue waste delivery entrance facilities in the northern part of the center property are proposed to be redesigned and realigned to better accommodate anticipated future traffic loading. Improvements include new entrance roadways, a new scale building, and three scales (two inbound scales and one outbound scale). Because the majority of public traffic would be redirected to the western property with this plan concept, these changes would not initially be needed and would not be implemented until the existing site entrance nears its vehicle capacity.

To provide access to the western property, a new site entrance is proposed in the southwestern corner of the Athens Avenue and Fiddyment Road intersection. This new entrance would provide access to the new composting operation, public waste drop-off area, and maintenance area proposed on the western property and would reduce the number of self-haul vehicles accessing the center property. The western entrance would include a scale building and two new scales (one inbound scale and one outbound scale).

Wastewater and Water Supply Infrastructure – The relocation of the composting operations and the public waste drop-off operations (discussed previously) to the western property would require the installation of a wastewater line and fire protection water line extending from the Fiddyment Road and Athens Avenue intersection south along Fiddyment Road to the Sunset Boulevard and Fiddyment Road intersection. These lines would extend for approximately 5,300 linear feet.

Landfill Gas-to-Energy Plant – No changes are proposed to the existing LFG-to-Energy Plant located in the northeastern part of the center property with implementation of Plan Concept 1.

Landscaping and Perimeter Fencing – Landscaping and irrigation would be installed at the administrative building, main entrance, and along the site perimeter. In addition, fencing would be installed along the site perimeter.

Any building square footage associated with these supporting element uses is assumed to be included in the total square footage of industrial uses identified in the Sunset Area Plan for the site.

Achievement of Project Objectives – The supporting elements would help the WPWMA achieve several project objectives, including the following:

- Maintaining a stable and relatively predictable cost structure
- Improving operational efficiencies
- Enhancing customer safety by improving site access and internal circulation
- Enhancing operational flexibility
- Conducting operations in the most environmentally responsible manner possible
- Developing the properties in a manner consistent with the Sunset Area Plan

3.6 Plan Concept 2

Plan Concept 2 (Figure 3-7) includes all of the elements summarized in Tables 3-1, 3-2, and 3-3 of Section 3.4. Section 3.6.1 describes changes to sitewide solid waste operations related to Waste Recovery and Waste Disposal that would change as a result of Plan Concept 2, while Sections 3.6.2 and 3.6.3 describe the unique Waste Recovery and Waste Disposal elements that are proposed to be implemented

for Plan Concept 2. Section 3.6.4 describes complementary and programmatic elements proposed for Plan Concept 2, and Section 3.6.5 describes supporting elements for Plan Concept 2.

3.6.1 Sitewide Solid Waste Operations

Summary

Table 3-16 summarizes the existing environmental baseline conditions related to sitewide solid waste operations and how implementation of Plan Concept 2 would change those conditions.

Table 3-16. Summary of Sitewide Solid Waste Operational Changes Under Plan Concept 2

Environmental Baseline	Plan Concept 2	Change
483,968 tons per year of material received at the site	Up to 912,200 tons per year of material received at the site	Up to 428,232 additional tons per year of material received at the site
Approximately 39% of material received at the site is recovered from the waste stream	Recovery of material received from the waste stream of 50% or greater	Recovery of material received at the site from the waste stream increased by 11% or greater
Waste Recovery operations limited to 1,750 tpd; Waste Disposal operations limited to 1,900 tpd	Sitewide solid waste management activities limited to a 7-day rolling average of 4,000 tpd	Conversion to a single permit limit with a 7-day rolling average of 4,000 tpd
Waste Recovery operations limited to 1,014 vehicles per day; Waste Disposal operations limited to 624 vehicles per day	The permitted vehicle limits for Waste Recovery and Waste Disposal operations would be eliminated	The number of Waste Recovery and Waste Disposal vehicles accessing the WPWMA facility would no longer be controlled by a permit limit
Odors are managed by facility (in particular, MRF building, composting operation, WRSL)	Odors would be managed sitewide through implementation of a SWOP	Improvements in odor control by managing odors sitewide, rather than by facility

Detailed Description

The proposed project has been identified to address the physical and operational changes that are needed at the WPWMA facility to accommodate the solid waste management needs of the Participating Agencies into the future, as well as to provide opportunities for future compatible technologies to be located onsite. Sitewide changes associated with Plan Concept 2 related to material and permit limits, traffic, and odor management are described in the following sections.

Sitewide Material Quantities, Diversion Rate, and Permitted Tonnage.

The WPWMA projects an average 2 percent annual increase in the amount of waste received at the WPWMA facility over the project period. This estimated increase in the waste stream reflects anticipated regional growth trends and changes in the recyclables market, based on current and upcoming regulatory requirements and other market conditions.

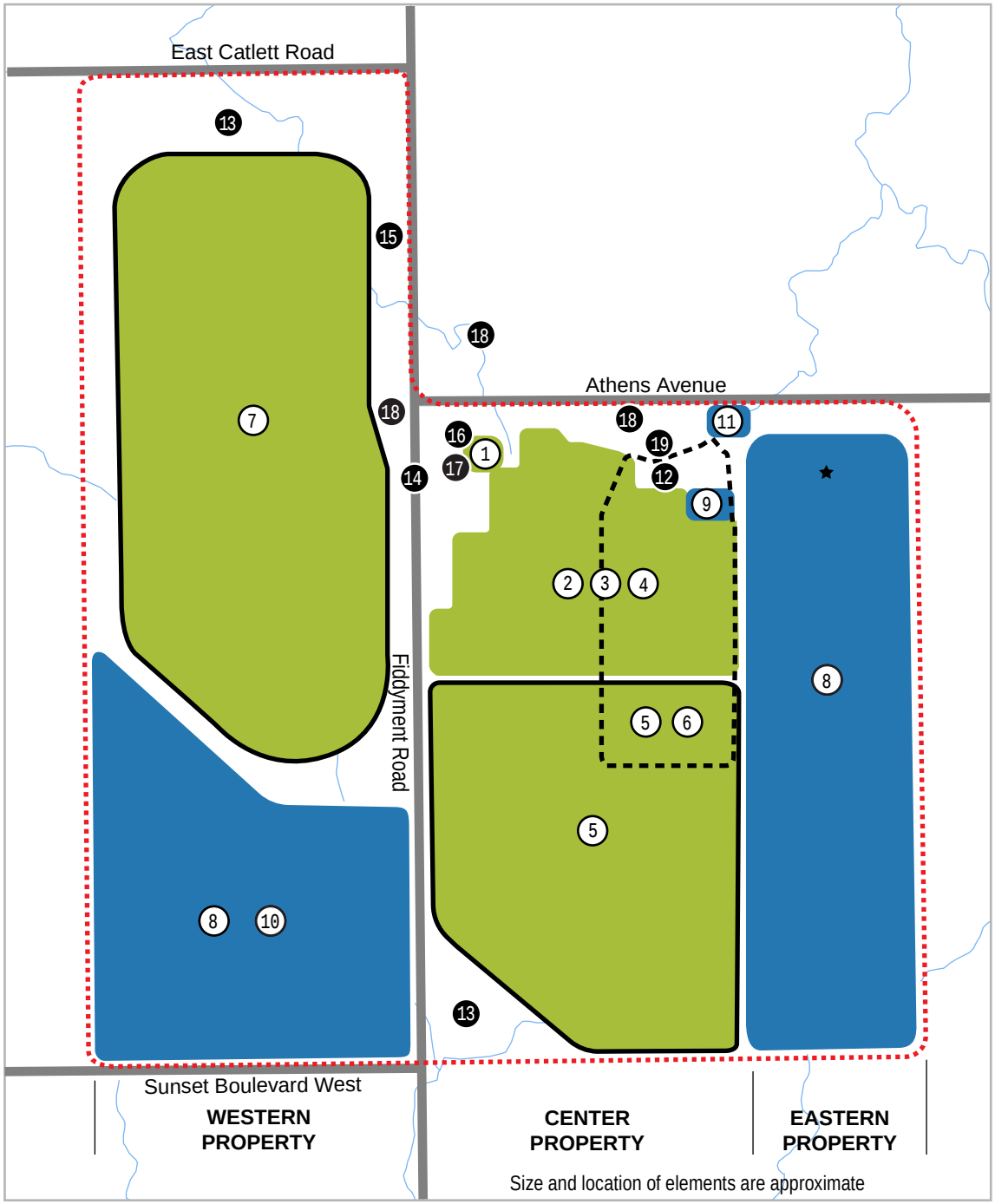

LEGEND

Solid Waste Project Elements

1. Materials Recovery Facility Building
2. Organics Management Operation
3. Construction & Demolition Materials Processing Operation
4. Public Waste Drop-Off Area Operations, Including Household Hazardous Waste Facility
5. Current & Future Landfill
6. Waste Excavation Area
7. Landfill Expansion Area

Complementary/Programmatic Elements

8. Compatible Technologies
9. Pilot Study Area
10. University Research Area
11. Landfill Gas To Compressed Natural Gas Area

★ Approximate Location of Project Level Complementary Elements

Supporting Elements

12. Recovered Materials Storage Area
13. Stormwater Ponds
14. Road Crossing
15. Maintenance Areas
16. Administrative Building Areas
17. Parking
18. Entrances
19. Landfill Gas-to-Energy Plant

Project Boundary

Landfill Footprint

Waste Excavation Area

North

0 0.5 1

Approximate scale in miles

Figure 3-7. Plan Concept 2
Draft Environmental Impact Report
Renewable Placer: Waste Action Plan
Placer County, California

Jacobs

As shown on Figure 1-4 (2018 Waste Material Flowchart) and Figure 3-2 (2050 Waste Material Flowchart), the WPWMA anticipates that annual waste material received at the site will grow from 483,968 tons in 2018 to 912,200 tons by 2050. In 2018, approximately 39 percent of waste material received at the site was recovered from the waste stream and not placed in the WRSL. By 2050, the recovery rate is anticipated to increase to 50 percent or greater, primarily because of operational changes in the organics management and C&D processing operations. Recovery greater than 50 percent may be possible because of future regulatory requirements and diversion opportunities that could result from the type and size of complementary technologies evaluated at a programmatic level in this EIR and discussed in Section 3.6.4.

The existing SWFP for Waste Recovery operations includes a permit limit of 1,750 tpd of material received, while the existing SWFP for Waste Disposal operations has a permit limit of 1,900 tpd of material received. For the WPWMA facility to accommodate anticipated growth in waste tonnage, Plan Concept 2 assumes the sitewide (Waste Recovery and Waste Disposal) permitted peak daily waste acceptance limit would be converted to a sitewide 7-day rolling average of 4,000 tpd. This change would allow the WPWMA to respond to changing regulations and waste streams without the potential to exceed a permit limit associated with either Waste Recovery or Waste Disposal. This change would also allow the WPWMA to seamlessly divert material received at the site to future compatible manufacturing technologies, further contributing to increased diversion rates. With this change, the daily sitewide tonnage limit would be defined as the average over a continuous rolling 7-day period. This number is identified by calculating, on each day that material is accepted, the average daily tonnage received over the prior 7 operating days. This rolling-average permit limit is proposed so that during unusually high peak days, waste haulers are not turned away, while the WPWMA facility still maintains a limit that prevents waste acceptance volumes from exceeding estimated growth levels.

The sitewide 7-day rolling average of 4,000 tons per day considers a number of factors, including the variability between material types and acceptance rates and modes (for example, materials delivered to the WRSL and MRF are typically delivered in larger trucks on weekdays, whereas material received at the public waste drop-off area is typically delivered in small, personal vehicles on the weekend). The sitewide 7-day rolling average also takes into account the anticipated increase in materials through 2050 and the relationship between average tons received per day and peak tons received per day over the past several years.

Removal of Permit Limit for Vehicles

Currently, Waste Recovery operations under SWFP No. 031-AA-0001 include a vehicle limit of 1,014 vehicles per day, while Waste Disposal operations under SWFP No. 031-AA-0210 include a vehicle limit of 624 vehicles per day. Plan Concept 2 proposes to eliminate vehicle permit limits for Waste Recovery and Waste Disposal operations, instead relying on a sitewide tonnage limit with a 7-day rolling average, as described previously. Because daily vehicle permit limits would require waste-hauling vehicles to be turned away if they are exceeded, the limits have the potential to discourage the appropriate disposal of waste materials. Eliminating the vehicle limits for Waste Recovery and Waste Disposal operations would not be expected to increase the number of vehicle trips generated by such operations, as the number of inbound vehicles would instead be controlled through the sitewide tonnage limit.

Sitewide Odor Management

In addition to the odor-control measures currently undertaken at the facility and described throughout Chapter 1, Introduction, the WPWMA will fully implement a SWOP to provide information about facility odor sources, meteorological conditions that have the potential to exacerbate the perception of odors, and the measures the WPWMA will take to reduce the potential for facility odors to be perceived by nearby

receptors. The SWOP will be used as a tool by the WPWMA and its facility operators and contractors to consistently and proactively take the appropriate steps to reduce the potential for offsite odors. The SWOP will establish BMPs used by the WPWMA to mitigate the release of odors from WPWMA facilities. It will include measures to prevent, monitor, and address odors. The BMPs will reflect current operating and regulatory conditions; changes in regulations or programs operated by the Participating Agencies may necessitate revisions to the SWOP.

The SWOP identifies four facilities or operations at the WPWMA facility with the greatest potential to produce odors: MRF building, composting operation, active landfill areas, and LFG collection and control system. Specific odor-control measures from the SWOP for each of these operations is included in their respective discussion in this chapter. The SWOP is included in Appendix C.6.

3.6.2 Waste Recovery Operations

Plan Concept 2 (Figure 3-7) includes changes to the Waste Recovery operations that occur at the MRF building, organics management operation, C&D material processing operation, and public waste drop-off area operations, each of which are described in Sections 3.6.2.1 through 3.6.2.4. Changes in the environmental control features common to Waste Recovery operations are described in Section 3.6.2.5.

Expanded Material Recovery Facility Building Operation

Summary.

Table 3-17 summarizes the existing environmental baseline conditions related to MRF building operation and how implementation of Plan Concept 2 would change those conditions.

Table 3-17. Summary of Expanded MRF Building Operation Under Plan Concept 2

Environmental Baseline	Plan Concept 2	Change
Annual waste material processing of 240,068 tons	Annual waste material processing of up to 416,600 tons	MRF building processes up to an additional 176,532 tons per year by 2050
MRF building permitted to receive material from 6:00 a.m. to 7:30 p.m. Monday through Saturday and from 6:00 a.m. to 5:00 p.m. Sundays and designated holidays	MRF building permitted to receive material from 6:00 a.m. to 7:30 p.m. Monday through Saturday and from 6:00 a.m. to 5:00 p.m. Sunday and designated holidays	No change
Material processing at MRF building permitted from 6:00 a.m. to 11:30 p.m. Monday through Sunday, with additional maintenance and cleanup work permitted from 4:00 p.m. to 6:00 a.m. Monday through Sunday	Material processing at MRF building may occur 24 hours per day, Monday through Sunday	Daily material processing at MRF building potentially occurring overnight

Detailed Description.

In 2018, approximately 50 percent of the material received at the WPWMA facility was processed through the MRF building, or approximately 240,068 tons. By 2050, material processed through the MRF building is anticipated to increase to approximately 416,600 tons, or roughly 46 percent of the total material received at the WPWMA facility. The existing MRF building is sized to accommodate the increase in annual tonnage anticipated through 2050, but hours of operation for the MRF building would increase as tonnage increases

over time. The MRF building is permitted to process material from 6:00 a.m. to 7:30 p.m. Monday to Saturday and from 6:00 a.m. to 5:00 p.m. Sundays and holidays but currently typically operates a single shift from 6:30 a.m. to 3:00 p.m. Monday to Friday. The WPWMA anticipates that the hours per day for MRF building operations will increase as material processed increases, potentially up to 24 hours per day operation. While this represents an increase over the current and permitted operation, the WPWMA is currently permitted to conduct MRF building maintenance and cleanup activities 24 hours per day.

MRF Building Odor Control – The materials processed at the MRF include organic materials and other putrescible wastes that have the potential to emit odors as they begin to decompose. As such, WPWMA currently implements BMPs for odor control for the MRF building. As part of the proposed project, the WPWMA will continue to implement additional BMPs for the MRF building as part of implementation of the SWOP, as provided in Appendix C.6. These BMPs focus on timely and consistent processing of the materials and regular housekeeping and cleaning of the facility to avoid the accumulation of potentially odiferous materials.

Achievement of Project Objectives – Expanded operation of the MRF building would help the WPWMA achieve several project objectives, including the following:

- Stabilizing the costs of Waste Recovery efforts
- Improving operational efficiencies
- Extending the operational life of the current WPWMA facility
- Increasing the diversion of materials from the landfill
- Reducing GHG emissions
- Enhancing operational flexibility
- Facilitating the siting and development of compatible technologies

Expanded and Redesigned Organics Management Operation

Summary

Table 3-18 summarizes the existing environmental baseline conditions related to the organics management operation and how implementation of Plan Concept 2 would change those conditions.

Table 3-18. Summary of Expanded and Redesigned Organics Management Operation Under Plan Concept 2

Environmental Baseline	Plan Concept 2	Change
Organics management operations located in the northern part of the center property	Expansion of the existing organics management operation within the northern part of the center property; Requires relocation of waste in modules 1, 2, 10, and 11	Organics management operation on the center property expanded and waste in modules 1, 2, 10, and 11 excavated and relocated
Organics management operation consists of composting	Organics management operation designed for composting but could accommodate other methods in the future	No change in use of composting for organics management
60,606 tons per year of green waste composted	157,900 tons per year of combined green waste, food waste, and other organics composted	Increase of 97,294 tons per year of compost and addition of food waste composting
Two compost leachate collection ponds	Redesign ponds to accommodate larger composting operations	Pond redesign and increase in capacity by approximately 50%

Table 3-18. Summary of Expanded and Redesigned Organics Management Operation Under Plan Concept 2

Environmental Baseline	Plan Concept 2	Change
Windrow composting process	Composting process – ASP technology for active composting	Transition from windrow to ASP technology
Compostable materials received outside	Potential construction of a food waste receiving building	Evaluation conducted with and without a future food waste receiving building
Odor control – Implementation and maintenance of good operating practices consistent with the SWOP and OIMP	Odor control – Implement SWOP, ASP technology, and use a biofilter layer on the piles to provide some odor control in addition to good operating practices	Improved composting technology for odor control

Detailed Description

The need for the expanded and redesigned organics management operation is driven by anticipated population growth within the WPWMA's service area and SB1383. SB 1383 was signed into California law in 2016, establishing methane emissions reduction targets in a statewide effort to reduce emissions of SLCP in various sectors of California's economy. SB 1383 establishes targets to achieve a 50 percent reduction in the level of the statewide disposal of organic waste from the 2014 level by 2020 and a 75 percent reduction by 2025.

Methane emissions resulting from the decomposition of organic waste in landfills contribute to global climate change. Organic materials, including waste that can be recycled or composted, account for a significant amount of California's overall waste stream. Food waste alone accounts for approximately 18 percent of material that goes to landfills. Increasing food waste prevention, encouraging edible food rescue, and expanding the composting and in-vessel digestion of organic waste throughout the state is expected to help reduce methane emissions from organic waste disposed in California's landfills. In addition, compost has numerous benefits, including water conservation, improved soil health, and carbon sequestration, and anaerobic digestion produces biogas that can be used to create electricity or renewable transportation fuels (CalRecycle 2019).

The WPWMA actively supports its Member Agencies in meeting the targets established by SB 1383. In particular, the expanded organics management operation at the WPWMA facility proposed as part of Plan Concept 2 is intended to help Member Agencies achieve a 75 percent reduction in the level of disposal organic waste by 2025.

Initially, the WPWMA intends to manage the organics waste stream by implementing an expanded composting operation, described in detail in the following sections. The proposed composting operation would continue processing green waste material and incorporate increasing amounts of food waste and other organics.

In the future, the WPWMA may determine that it is more beneficial to the Participating Agencies to manage the organics waste stream in alternate ways in addition to composting. For example, one method of managing food waste that is becoming more common is through anaerobic digestion. A potential future scenario at the WPWMA may include processing food waste and other select organics through anaerobic digestion while continuing to process green waste through composting. The future potential for anaerobic

digestion at the WPWMA facility is further discussed in Section 3.6.4, Complementary and Programmatic Elements.

Expanded Organics Management Operation – The existing organics management operation, which uses composting in the northern part of the center property, would be expanded on the center property to accommodate anticipated material growth rates, increased organics diversion requirements, the processing of food waste and other non-green waste organic materials, and improvements in odor control. The existing composting operation currently processes approximately 60,606 tons per year of organics material (predominantly green waste and a relatively small amount of food waste). By 2050, the expanded compost operations are estimated to be processing a total of 157,900 tons per year of combined green waste and food waste.

The expanded composting operations would include an outdoor positive ASP system for the near term that could potentially transition to an outdoor negative, or reverse, ASP system with an extended bed configuration. The expanded operations would also include an outdoor feedstock receiving and preprocessing area, curing area, and screening and product storage area. The two existing ponds that serve the existing composting operations would be redesigned to accommodate the expansion. The capacity of these ponds is anticipated to be increased by approximately 50 percent.

Compostable Material Receiving Operations – Source-separated feedstock (green waste, wood waste, and food waste) would be unloaded directly by customers into outdoor receiving piles: green waste would be unloaded within the green waste receiving area, wood waste would be unloaded directly by customers into an outdoor receiving pile situated within the wood waste receiving area, and food waste would be unloaded adjacent to the preprocessed green waste for expedited mixing and stockpiling. Each receiving pile or facility would be sized to hold the estimated peak design per week tonnage. The food waste receiving and preprocessing area would be located within an enclosed space in the future as the WPWMA receives increasing levels of food waste. The WPWMA estimates that a food receiving building would be required when food waste exceeds 30 percent of the total incoming compost feedstock.

Unloading of materials by customers would alternate between piles weekly. Receiving piles in the feedstock receiving areas would be approximately 12 feet high and 75 feet wide, which would allow five customers to unload simultaneously. Customers would unload material on the one side of the piles, while operations staff would remove material from the opposite side. The piles would serve as a barrier between customers and operations staff and equipment.

All preprocessing would initially occur outdoors within the receiving area. Material would be sent through a sort line for visual inspection and to remove contaminants prior to preprocessing. Visible contaminants would be manually removed and disposed. After the sort line, material would be sent through a tub grinder (or similar size-reducing piece of equipment) for further preprocessing. After grinding, feedstocks would be pushed into piles located adjacent to the receiving piles and away from the customer unloading area.

Grinding operations would alternate between receiving piles weekly, such that the receiving pile that was created the previous period (up to a week) would be ground the following period (up to a week). The grinder would be situated between the receiving pile and the ground material stockpile during operation. Feedstocks would be managed with a front-end loader equipped with an oversized grapple bucket, excavator, or similar equipment. A portable misting system would be available for use around the grinder as required.

The expanded composting operation is assumed to eventually include the use of an enclosed food waste receiving and mixing building (as indicated previously), correlated to increasing amounts of food waste at

the WPWMA facility. However, because the timing of the building construction is not tied to the expansion of the composting operations, there would likely be a period of composting of primarily green and food waste that does not include the use of an enclosed receiving area. The use of a receiving building is anticipated to reduce odors from food waste. Therefore, for impact evaluation purposes, this EIR evaluates the impacts of operating the composting operation with the addition of minimal food waste (less than 30 percent of total compost feedstock and organic waste and no receiving building) and with increasing levels of food waste (greater than 30 percent of total compost feedstock and organic waste and with a receiving building).

Aerated Static Pile Composting Operations – Material would be moved from the receiving and preprocessing area to the active compost area by using a combination of electrically powered conveyors, conventional or other front-end loaders, or tandem-axle trucks. The ASP composting system is proposed to be sized to provide a 4-week active composting process. It is anticipated that four ASP beds would be provided, each with a capacity of approximately 15,577 cy, and five aeration zones. The ASP composting system would initially be positive ASP but could transition to negative, or reversible ASP and would be located outdoors. Fire hydrants would be located near the receiving area in accordance with *Placer County Fire Code* requirements.

Curing Operation – After feedstocks have been stabilized in the active composting system, additional curing would be completed so that the materials meet regulatory and market requirements. First, material would be physically removed from the ASP piles by using a combination of front-end loaders and conveyors and then placed into curing piles. Curing would be completed by using an outdoor static pile system with an anticipated residence time of 8 weeks. Seventy-eight static piles would be provided for curing, with a total capacity of 85,613 cy.

The ASP and static pile (active and curing) systems would be built over a concrete slab. Working areas around the ASP and static pile systems would consist of compacted gravel base or subbase overlain by heavy-duty asphalt or concrete. Concrete and heavy-duty asphalt surfaces would be designed to withstand the weight of wheel loaders and trucks. These surfaces would be designed, constructed, and maintained to provide a durable working surface and protect groundwater.

Post-Curing Composting Operation – Following curing, material would be relocated to a screening and temporary stockpile area by using front-end loaders and electrically powered conveyors. Materials in the temporary stockpile area would be screened by using an electrically powered, stationary trommel or star screen with a 20- to 25-cy feed hopper. The screening equipment may be covered by a light-weight steel-fabric structure to allow for continuous operation during rainy periods.

After screening, the finished product would be stockpiled while awaiting shipping to end users. The screening and product storage areas would have a total capacity of approximately 40,000 cy and 14,030 cy per week, respectively. The finished product and product storage area has sufficient space to store roughly 2 months' worth of finished product. This would allow for continued operation during slow product marketing periods (for example, winter months). It would also allow for product to be further aged (cured) before it leaves the facility, which may be necessary for certain markets and end uses. Overs that remain from the screening process could be reused as an amendment for fresh feedstocks, as biofilter material, reprocessed for landscape applications, or used as a biomass fuel.

Compost Pond – The compost pond in the northern part of the center property, east of the MRF, would be removed or modified as required by the Regional Water Quality Control Board. This compost pond is approximately 53,200 square feet in area. The new or modified compost pond would have adequate capacity to prevent overtopping during the 25-year return period storm year without pumping to the sewer.

Composting Operation Odor Control – ASP as an active composting method has positive effects on odor control. Use of positive ASP includes the placement of a 1-foot biofilter layer (typically finished compost) atop the active ASP piles. In the event the ASP is transitioned to a negative or reserve ASP process, the process air collected would be treated by using a stand-alone biofilter. The biofilters would consist of a 5-foot-thick layer of coarse wood chips blended with compost overlying a network of air distribution pipes. The biofilters would be situated on an asphalt or concrete pad, which would be sloped (approximately 1 percent slope) for drainage and for the collection of any leachate. Leachate would be directed to an aerated collection pond. Odor control in the curing operation would be achieved through the implementation and maintenance of good operating practices consistent with the SWOP to be implemented for the proposed project (Appendix C.6), and which includes additional BMPs for the composting operation.

Achievement of Project Objectives – The expansion and redesign of the compost operations would help the WPWMA achieve several project objectives, including the following:

- Complying with new state regulations related to organics diversion from landfills
- Stabilizing the costs of composting
- Improving operational efficiencies
- Extending the operational life of the current WPWMA facility
- Expanding the diversion of materials from the landfill
- Reducing GHG emissions
- Enhancing public safety by improving internal circulation
- Enhancing operational flexibility
- Continuing to improve compatibility with adjacent land uses through the implementation of ASP technologies
- Developing the properties in a manner consistent with the Sunset Area Plan

Differences Between MRF Operations RFP Proposals and Plan Concepts – Vendor proposals received in the MRF Operations procurement process include some variations in the types of materials processed at the organics processing area as well as some differences in how that material is processed (MSW organics composting). Generally, the vendor-proposed organics management operation is being designed to accommodate a total tonnage of 157,550 tons per year of organics (92,450 tons per year of food waste plus the organics fraction of MSW and 65,100 tons per year of yard waste). This capacity is comparable to the full buildout capacity of the Organics Management Operation in Plan Concept 1 and Plan Concept 2. The inclusion of the organic fraction of MSW in the proposed feedstocks is one area that the proposals differ from the plan concepts. It is assumed that this material would be recovered during the sorting process inside the MRF building. Recovering this material would also result in higher diversion rates and less material going to the landfill. Additional features of the Organics Management Operation represented in the proposals is summarized as follows:

- **Location** – The proposals show the Organics Management Operation located on the center property (which is consistent with Plan Concept 2).
- **Processing Technology** – The technology proposed for processing includes a combination of ASP and covered ASP CASP. Some form of CASP would be used to process the food waste and OFMSW. One of those proposals, utilizes a biolayer (similar to the proposed project) cover and one uses a membrane cover. The aeration systems proposed for the food waste and OFMSW is either positive or reverse flow.

The two proposals use a biolayer cover on the ASP piles that are processing yard waste. ASP is used for curing all organics feedstocks rather than static piles

- **Feedstock Receiving Building** – One proposal includes an odor-controlled building for the receiving and processing of yard waste. This differs slightly from the plan concepts, which include the potential future inclusion of a receiving building for food waste.
- **Stormwater Management** – No changes from plan concepts; stormwater would be managed in the same infrastructure and with the same BMPs for compost stormwater.
- **Utilities and Energy** – The capacity of the Organics Management Operations represented in the proposals is essentially equal to the ultimate capacity of this area in the plan concepts. With the addition of the OFMSW, it is assumed that the timeline for this size facility is required sooner, but that the ultimate capacity is the same. While this would result in an increase in energy use in the near-term, in the end, the energy and utilities should be equivalent.

Expanded and Redesigned Construction and Demolition Materials Processing Operations

Summary

Table 3-19 summarizes the existing environmental baseline conditions related to C&D material processing operations and how implementation of Plan Concept 2 would change those conditions.

Table 3-19. Summary of Expanded and Redesigned Construction and Demolition Materials Processing Operations Under Plan Concept 2

Environmental Baseline	Plan Concept 2	Change
C&D materials processing operation on the center property	Expanded C&D materials processing operation on the center property. Requires relocation of waste in modules 1, 2, 10, and 11	Increase in the size of the C&D materials processing operation by 2 to 3 times on the center property. Waste in modules 1, 2, 10, and 11 excavated and relocated
58,146 tons per year of C&D material processed plus 29,258 tons per year of inerts processed	174,600 tons per year of C&D material processed, plus 55,200 tons per year inerts	Increase of 116,454 tons per year of processed C&D material and 25,942 tons per year inerts

Detailed Description

The C&D operations area (that includes a covered receiving area and a C&D materials processing line) in the northern part of the center property would be expanded and redesigned to improve operational efficiencies, accommodate growth in the waste stream, and respond to increased state-mandated diversion requirements (e.g., CALGreen Building Standards), and the needs of Participating Agencies. To accommodate this expansion, buried waste in the northern part of the existing landfill footprint, including within Modules 1, 2, 10, and 11, would need to be excavated and relocated to a Subtitle D-compliant landfill module within another area of the landfill footprint. A detailed description of these activities is included in the Excavation of Existing Solid Waste section. The excavation and relocation of this waste would provide the necessary area on the center property to accommodate the expanded C&D materials processing operation.

The expanded C&D operations would cover approximately 2 to 3 times the area of the existing C&D operations and would be designed to accommodate new processing equipment capable of handling the

projected tonnage. An open-air roof structure would be constructed to shield the processing line from weather elements.

The existing C&D materials processing area processes approximately 58,146 tons of C&D material plus another 29,258 tons per year of inerts. Within 30 years, the expanded and redesigned C&D materials processing operation is estimated to process up to 174,600 tons per year of C&D materials.

The C&D materials processing area may also support the receipt, stockpiling, and processing of inert materials. Up to 55,200 tons per year of inert material would be processed at the WPWMA facility by 2050. However, inert materials may also be stockpiled and processed at various areas throughout the site. For example, materials to be used for road base may be stockpiled and processed adjacent to the main onsite landfill haul roads.

Achievement of Project Objectives – The expansion and redesign of the C&D operations would help WPWMA achieve several project objectives, including the following:

- Complying with new state regulations related to C&D material diversion
- Stabilizing the costs of C&D operations
- Improving operational efficiencies
- Extending the operational life of the current WPWMA facility
- Increasing the diversion of materials from the landfill
- Reducing GHG emissions
- Enhancing public safety by improving internal circulation
- Enhancing operational flexibility
- Conducting operations in the most environmentally responsible manner possible
- Developing the properties in a manner consistent with the Sunset Area Plan

Expanded and Redesigned Public Waste Drop-Off Area Operations

Summary

Table 3-20 summarizes the existing environmental baseline conditions related to public waste drop-off area operations and how implementation of Plan Concept 2 would change those conditions.

Table 3-20. Summary of Expanded and Redesigned Public Waste Drop-Off Area Operations Under Plan Concept 2

Environmental Baseline	Plan Concept 2	Change
Public waste drop-off area in the northern part of the center property includes a public tipping area, drop-off area for buy-back materials and HHW, and an entrance kiosk	Expanded and redesigned public waste drop-off area on the center property. New facilities include a public tipping area, material buy-back center, HHW drop-off area, reuse store, and entrance kiosk with vehicle queuing. Requires relocation of waste in modules 1, 2, 10, and 11	Increase in public waste drop-off area capacity on the center property; new reuse store. Waste in Modules 1, 2, 10, and 11 excavated and relocated
44,194 tons per year received	Public waste drop-off area operations would receive up to 83,300 tons by 2050	Increase in public waste drop-off area operations by up to 39,106 tons by 2050

Detailed Description

The existing public waste drop-off area is located in the northern part of the center property. The expanded public waste drop-off area would be redesigned and expanded to enhance the safety and convenience of public customers by separating them from the more active commercial waste management operations. The public waste drop-off area operations are proposed to include a public waste tipping area, a material buy-back and sales center, an HHW drop-off area, a reuse store, and an entrance kiosk with vehicle queuing lanes.

The eastern part of this new public waste drop-off area will require that buried waste in the northern part of the existing landfill footprint, including within Modules 1, 2, 10, and 11, would need to be excavated and relocated to a Subtitle D-compliant landfill module within another area of the landfill footprint. A detailed description of these activities is included in the Existing Solid Waste Excavation section.

The public waste drop-off area currently accepts MSW, C&D, electronic wastes, tires, and appliances. In general, material received at the public waste drop-off area may include any of the materials accepted for Waste Recovery or Waste Disposal. These same waste materials would be accepted at the expanded drop-off area. The customer unloading area would be a flat slab instead of the current split-grade, Z-wall configuration for operational safety and flexibility. The tipping floor would have several slots, in an open configuration, for customers to back into and unload their materials. Customers would unload material into piles on the one side of the tipping area, while operations staff would remove material from the opposite side. The piles would serve as a barrier between customers and operations staff and equipment. Operations staff would load materials into roll-off bins.

The tipping area would be on a concrete pad. All other surfaces of the drop-off area would be paved with heavy-duty asphalt. The concrete and heavy-duty asphalt surfaces would be designed, constructed, and maintained to provide a durable working surface and protect groundwater.

Approximately 26 tipping slots would be provided at the public tipping floor for customers to unload MSW, C&D, green waste, and wood waste. Tires would be accepted in 40-cy bins, with loading conducted at grade. Appliances would be accepted at a loading dock and placed onto trailers. Mattresses and carpet would be accepted and placed into 53-foot trailers or 40-cy bins by loaders or forklifts. A roll-off bin truck would be used to transport full bins to the MRF, C&D processing area, or organics processing area after being weighed at the scale house.

Surface water from outside of the public waste drop-off area would be diverted away from the operating areas by using ditches, swales, and berms. Runoff from the public waste drop-off area would be captured through a combination of ditches and swales and would be transferred to a center property detention pond. Fire hydrants would be located near the public waste drop-off area, consistent with *Placer County Fire Code* requirements.

The buy-back center is currently co-located with the HHW receiving area within the public waste drop-off area and is where clean, source-separated recyclables can be dropped off free of charge and where glass, plastic, and aluminum CRV beverage containers can be turned in for a refund. The HHW receiving area receives hazardous waste from the public and small-quantity generators. These activities would be relocated to the expanded and redesigned public drop-off area to include a new material buy-back center, a new HHW drop-off area, and a reuse store. The material buy-back center, HHW drop-off area, and reuse store would be located near the entrance kiosk. These facilities are intended to encourage the diversion of waste from the landfill by allowing customers to sell or donate usable items rather than disposing of them, to purchase used items rather than buying new items, and to conveniently drop off HHW and recyclables.

The buy-back center would have approximately six unloading positions, and the HHW drop-off area would have approximately four unloading positions. The reuse store would have parking spots and customers would go inside to conduct transactions.

Achievement of Project Objectives – The expansion and redesign of the public waste drop-off area would help the WPWMA achieve several project objectives, including the following:

- Stabilizing the costs of waste acceptance activities
- Improving operational efficiencies
- Extending the operational life of the current WPWMA facility
- Increasing the diversion of materials from the landfill
- Reducing GHG emissions
- Enhancing public safety by improving internal circulation
- Enhancing operational flexibility
- Conducting operations in the most environmentally responsible manner possible
- Developing the properties in a manner consistent with the Sunset Area Plan

Environmental Control Measure Implementation

Summary

Table 3-21 summarizes the existing environmental baseline conditions related to Waste Recovery environmental control measures, and how implementation of Plan Concept 2 would change those conditions.

Table 3-21. Summary of Environmental Control Measure Implementation Under Plan Concept 2

Environmental Baseline	Plan Concept 2	Change
Environmental control measures are implemented consistent with regulations to protect public health and the environment	The expanded Waste Recovery operations would require the continued implementation of environmental control measures, including dust control, litter control, nuisance control, odor control, and load checking	The existing environmental control measures would continue to be implemented with the expanded Waste Recovery operations

Detailed Description

Existing Waste Recovery environmental control measures are described in Section 1.5.2.5 of the Introduction Chapter. Environmental control measures include dust control, litter control, nuisance control, odor monitoring and control, and load checking. These environmental control measures are implemented in a manner consistent with the requirements of CCR Title 27.

With the expansion in Waste Recovery operations at the composting operation, C&D materials processing operations, and public waste drop-off area operations, the continued implementation of these control measures would be required. Although Waste Recovery operations would expand, no substantial change in these measures or how they would be implemented is expected. However, odor monitoring and control for Waste Recovery operations would be improved by implementing the SWOP, included in Appendix C.6.

Achievement of Project Objectives – The continued implementation of required environmental control measures would help the WPWMA achieve the project objectives of conducting operations in the most environmentally responsible manner possible.

3.6.3 Waste Disposal Operations

Waste Disposal operations at the WPWMA facility consist of operation of the WRSL. Plan Concept 2 includes changes to the Waste Disposal operations that occur at the WRSL, including landfill disposal capacity expansion, an increase in the tonnage acceptance limit, the elimination of the permitted vehicle limit, modifications in the landfill environmental monitoring and control systems, and the proposed excavation and relocation of previously disposed waste in areas that do not have a Subtitle D-compliant liner system. These changes are described in Sections 3.6.6 through 3.6.9. Plan Concept 2 does not include any changes in the sources or types of waste accepted, the typical Waste Disposal operations (for example, load checking, daily cover placement, intermediate cover placement), the nuisance control measures, or the closure plan for the WRSL.

Increased Landfill Waste Disposal

Summary.

Table 3-22 summarizes the existing environmental baseline conditions related to Waste Disposal and how implementation of Plan Concept 2 would change those conditions.

Table 3-22. Summary of Tonnage and Vehicle Limit Changes Under Plan Concept 2

Environmental Baseline	Plan Concept 1	Change
Current annual disposed tons – 288,838	Projected annual disposed tons – 533,654	Projected increase in annual tons – 244,816
Material Tonnage Permit Limits	Waste Recovery operations limited to 1,750 tpd; Waste Disposal operations limited to 1,900 tons per day	Sitewide solid waste management activities limited to a rolling 7-day average of 4,000 tpd
Vehicle Permit Limits	Waste Recovery operations limited to 1,014 vehicles per day; Waste Disposal operations limited to 624 vehicles per day	The permitted vehicle limits for Waste Recovery and Waste Disposal operations would be eliminated

Detailed Description.

As illustrated on Figures 1-4 and 3-2, the WPWMA generally projects an average 2 percent annual increase in the amount of waste accepted for disposal at the WRSL over the project period, with interim adjustments in select years to account for increased diversion through improved Waste Recovery capabilities, such as at the Organics Management Operation and the C&D Materials Processing Operation. This estimated increase in the waste stream requiring disposal at the WRSL reflects anticipated regional growth trends, current and future stability and health of recyclables markets, and regulatory requirements related to landfill disposal. These future Waste Disposal estimates are independent of any proposed changes to the current WRSL configuration identified in Plan Concept 1. Any considered changes to the WRSL configuration are in response to the estimated growth in the waste stream requiring disposal.

Assuming that the individual daily waste acceptance rates, including the peak acceptance days, also escalate at an average annual rate of 2 percent, the disposal metrics would change as follows:

Waste Disposal Metric	2018 (Actual)	2050 (Estimated)
Average weekday disposal rate	1,113 tons	1,755 tons
Total (annual) waste disposed	294,923 tons	456,400 tons

Source: Oddo, pers. comm. 2020

Achievement of Project Objectives – The increase in the Waste Disposal tonnage limit and the removal of vehicle count limit would help the WPWMA achieve several project objectives, including the following:

- Providing sufficient Waste Disposal capacity to accommodate anticipated long-term growth
- Maintaining a stable and relatively predictable cost structure
- Improving operational efficiencies

Expanded Landfill Disposal Capacity

Summary

Table 3-23 summarizes the existing environmental baseline conditions related to landfill capacity and how implementation of Plan Concept 2 would change those conditions.

Table 3-23. Summary of Proposed Landfill Capacity Increase Under Plan Concept 2

Environmental Baseline	Plan Concept 2	Change
Landfill located on center property	Landfill located on center property, and second landfill located western property	New permitted landfill on western property
Landfill height – 196 feet above msl. Current permitted peak elevation – 295 feet AMSL	Proposed permitted peak landfill elevation – 325 feet AMSL	Height increase above current conditions – 129 feet. Height increase above currently permitted conditions – 30 feet
Permitted Waste Disposal footprint – 231 acres	Proposed total Waste Disposal footprint for both landfills – 362 acres	Increase in Waste Disposal footprint – 131 acres
Permitted capacity = 36.3 million cy	Proposed permitted capacity = 86.5 million cy	Increase in permitted capacity = 50.2 million cy
Waste capacity exhausted in approximately 2058	Waste capacity exhausted in approximately 2110	Estimated 52-year increase in landfill site life
Maximum depth of landfill excavation for module development – 57 feet AMSL	Proposed maximum depth of landfill excavation for module development for both landfills – 57 feet AMSL	No change in depth of landfill excavation

Table 3-23. Summary of Proposed Landfill Capacity Increase Under Plan Concept 2

Environmental Baseline	Plan Concept 2	Change
Eventual excavation of Module 8 and relocation of current composting and C&D operations on Module 9 to allow for future development of these modules for landfill disposal	Continued use of Module 9 for processing and recycling operations and use of Module 8 for these activities. Neither Module 8 nor 9 would be excavated for landfill disposal	Elimination of Modules 8 and 9 for future Waste Disposal with associated reduction in landfill disposal capacity on the center property

Detailed Description

Waste Disposal activities are currently allowed within the boundaries of the existing 231-acre permitted landfill footprint on the center property. Plan Concept 2 includes continuing to use the existing WRSL on the center property while also building a second landfill on the western property. The footprint of the existing WRSL would be reduced by eliminating the use of Modules 8 and 9 for landfill disposal. The combined footprint of the two landfills would be 362 acres. Plan Concept 2 also includes increasing the permitted landfill heights to 325 feet, or approximately 30 feet above the currently permitted peak elevation of 295 feet and 129 feet above the landfill's existing height of 196 feet (as of aerial mapping dated January 2, 2019). With this change, both landfills would be permitted to reach a maximum height of 325 feet.

As of June 30, 2019, the WRSL had a remaining disposal capacity of approximately 23.6 million cy. Based on projected Waste Disposal trends and the currently permitted maximum capacity of approximately 36.3 million cy, the WRSL is estimated to reach final capacity in 2058 (Golder Associates, Inc. 2017). By constructing a second landfill on the western property and increasing the permitted landfill heights, the site's total remaining Waste Disposal capacity would increase by approximately 50.2 million cy to a total of approximately 86.5 million cy. As a result, the WRSL's remaining site life is estimated to extend to approximately the year 2110.

These site life projections are strongly affected by growth in the waste stream. If waste stream growth consistently exceeds the assumed growth rates, then the site life will decrease. Other factors also affect the WRSL's site life, including the refuse-to-soil ratio achieved when applying daily and intermediate soil cover, the recovery rate achieved at the MRF, the tonnage of organics diverted from the landfill, and actual settlement of the waste.

Within the existing WRSL footprint, the pre-landfill-development elevations ranged from approximately 106 feet AMSL in the southwestern corner to approximately 134 feet AMSL in the central part of the site. The maximum depth of landfill excavation within the existing landfill footprint to accommodate the development of Waste Disposal modules is 57 feet AMSL.

For the western property, the current ground surface elevations range from 103 feet AMSL along the southern property boundary to 127 feet AMSL in the central part of the property. The maximum depth of landfill excavation proposed within the western property to accommodate the development of Waste Disposal modules would be to a depth of 57 feet AMSL. Therefore, there would be no change in the maximum depth of landfill excavation with the implementation of Plan Concept 2.

The existing composting and C&D material processing operations located on the part of the WRSL designated as Module 9 are currently planned to be relocated when Module 9 is ultimately needed for Waste Disposal. However, Plan Concept 2 assumes that Module 9 would not be converted to a landfill module in the future but would continue to be used for Waste Recovery operations. In addition, Module 8 is assumed to not be used for landfilling. Eliminating the use of Modules 8 and 9 for Waste Disposal operations would reduce the WRSL's currently permitted disposal capacity. However, this reduction would be substantially offset by the additional capacity realized by developing landfill capacity on the western property. The total permitted Waste Disposal capacity estimates discussed previously for Plan Concept 2 reflect the increase in capacity associated with the western expansion and the capacity reduction resulting from the elimination of Modules 8 and 9.

With the implementation of Plan Concept 2, the additional Waste Disposal capacity that would be provided by the western landfill expansion would be available following project approval and the issuance of all applicable permits but would only be developed as needed. Figure 3-8 identifies the sequence in which existing and future landfill modules are estimated to be filled. Based on this anticipated fill sequence, Figure 3-9 identifies the estimated elevation and contours of the existing landfill and the western landfill in the year 2050. Figure 3-10 identifies the final elevation and contours of the existing and western landfills once they reach full capacity, which is estimated to occur in the year 2110.

WRSL Operation Odor Control – As described in Chapter 1 (Section 1.6.3.10), the existing WRSL implements a series of BMPs to minimize the potential for offsite odors from aerobic decomposition of waste (primarily from the landfill working face). In addition to the existing BMPs, the WPWMA would implement a SWOP for the proposed project (Appendix C.6), which includes additional BMPs for landfill operation.

Achievement of Project Objectives – The expansion of landfill disposal capacity would help the WPWMA achieve several project objectives, including the following:

- Maintaining a stable and relatively predictable cost structure
- Improving operational efficiencies
- Extending the operational life of the current WPWMA facility
- Increasing the permitted landfill footprint and height to optimize the efficient use of land for Waste Disposal
- Providing sufficient Waste Disposal capacity to accommodate anticipated long-term growth
- Enhancing operational flexibility
- Developing the properties in a manner consistent with the Sunset Area Plan

Figure 3-8. Plan Concept 2 WRSL Anticipated Fill Sequence
Draft Environmental Impact Report
Renewable Placer: Waste Action Plan
Placer County, California

Jacobs

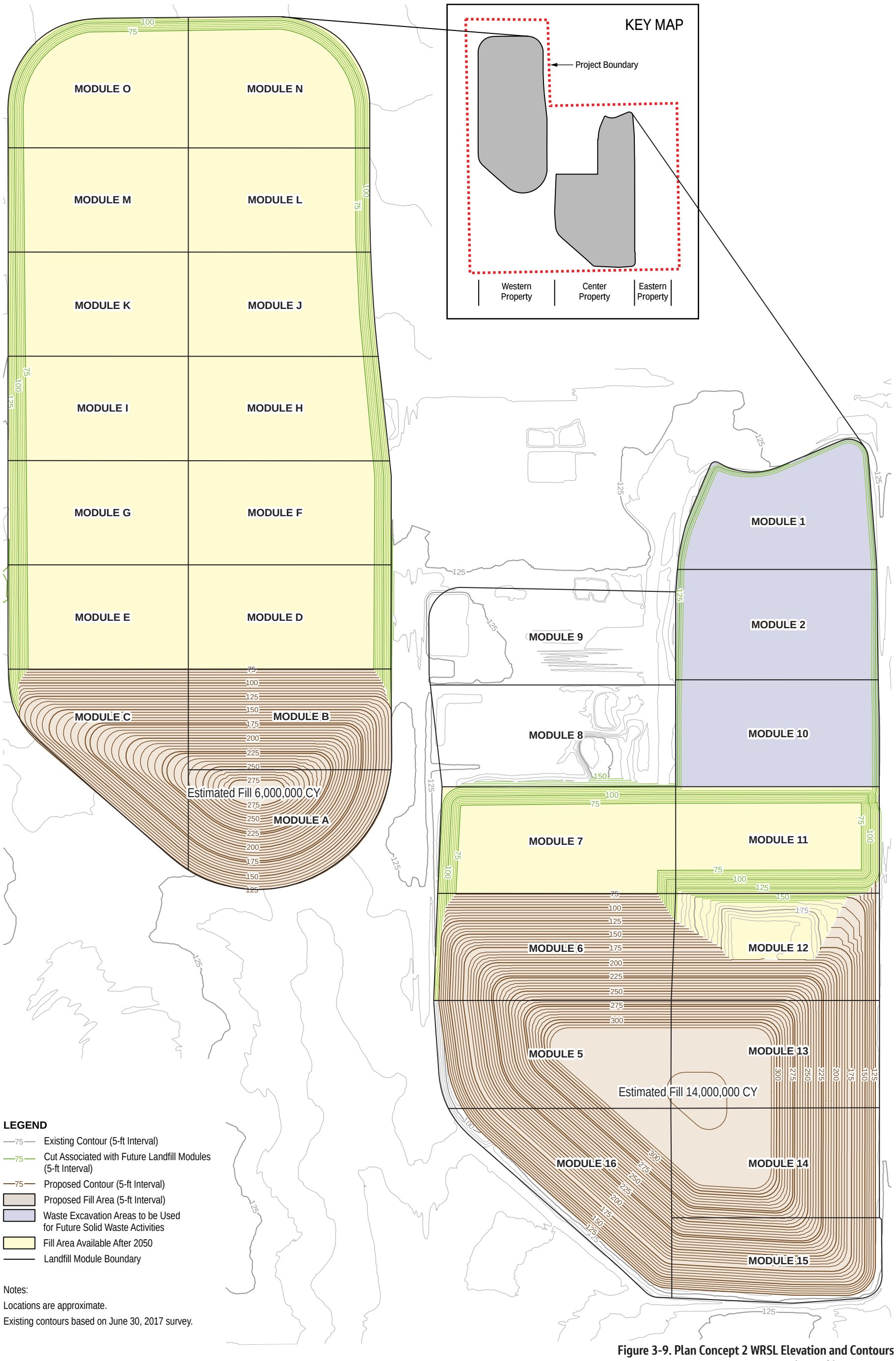

Figure 3-9. Plan Concept 2 WRSL Elevation and Contours Estimated in Year 2050
Draft Environmental Impact Report
Renewable Placer: Waste Action Plan
Placer County, California

Jacobs

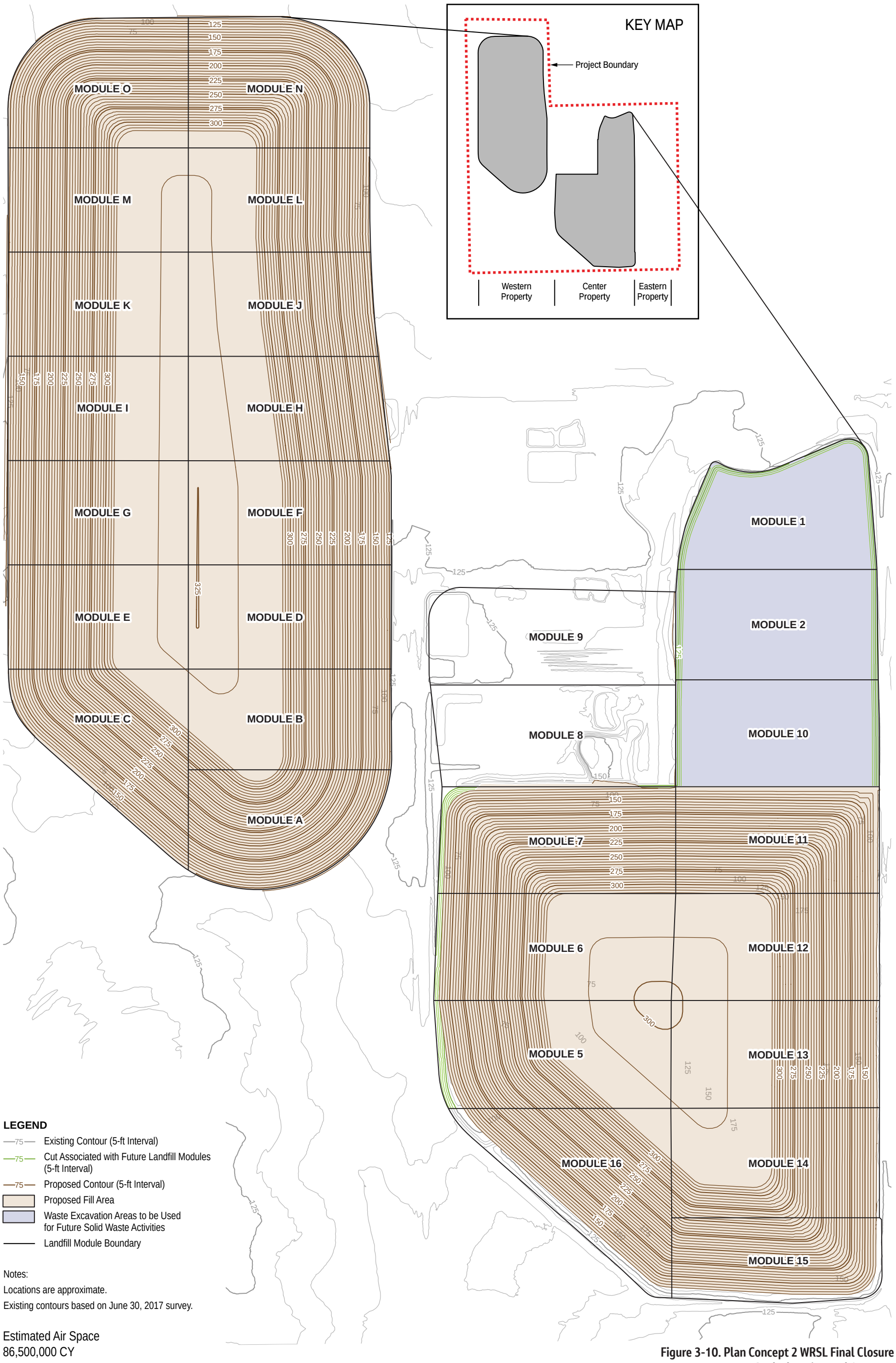

Figure 3-10. Plan Concept 2 WRSL Final Closure Peak Elevation and Contours
Draft Environmental Impact Report
Renewable Placer: Waste Action Plan
Placer County, California

Jacobs

Landfill Environmental Monitoring and Control Systems

Summary

Table 3-24 summarizes the existing environmental baseline conditions related to landfill environmental monitoring and control systems and how implementation of Plan Concept 2 would change those conditions.

Table 3-24. Summary of Landfill Environmental Monitoring and Control Systems Under Plan Concept 2

Environmental Baseline	Plan Concept 2	Change
A combination of non-Subtitle D and Subtitle D-compliant (composite) lined modules exists within the WRSL permitted footprint; Double-composite landfill liners will be installed in new modules constructed within the existing permitted landfill footprint	Double-composite landfill liners would be installed in any future modules, consistent with current practice	No changes in the liner systems are proposed with this Plan Concept; Future modules are proposed to include double-composite liners, consistent with current practice
Continued operation of the existing leachate management system, surface water management system, and LFG management system and expansion of these systems within the existing permitted landfill footprint	The environmental monitoring systems would be expanded to accommodate the increased landfill height on the center property and would be replicated in the second landfill on the western property	Expanded environmental monitoring systems consistent with the increased landfill height on the center property and the new landfill on the western property
Environmental monitoring systems and programs are in place in compliance with current regulations for leachate, surface water, groundwater, and perimeter LFG	The environmental monitoring systems and programs would be expanded based on the landfill footprint and applicable regulatory requirements	Expanded environmental monitoring systems and programs to reflect the expanded landfill footprint

Detailed Description

The existing WRSL incorporates various environmental monitoring and control systems designed to eliminate, minimize, or identify potential environmental impacts and nuisances. The following environmental monitoring and control systems are integrated into the current WRSL operations and would be expanded as the landfill height increases on the center property and the new landfill is constructed on the western property:

- Double-Composite Landfill Liner System
- Leachate Management System
- Surface Water Management System
- LFG Management System
- Groundwater monitoring system

Environmental monitoring and reporting occurs for leachate, surface water, groundwater, and LFG. Existing environmental monitoring systems for the WRSL are shown on Figure 1-7, and the expansion of these systems for Plan Concept 2 is shown on Figure 3-11.

Double-Composite Landfill Liner System – Landfill liner systems are designed to contain waste materials, including liquids, and prevent them from coming into contact with the underlying soil or groundwater. As described in the Landfill Module Development Phasing discussion included in Chapter 1, the liner systems for the existing modules on the site vary depending on when they were constructed. Because Modules 1, 2, 10, and 11 were constructed prior to implementation of Subtitle D regulations, they do not have Subtitle D-compliant liner systems. Plan Concept 2 includes excavating and relocating the waste in these modules to a new Subtitle D-compliant, double-composite-lined module. The excavation area is proposed to be reengineered to include a Subtitle D-compliant, double-composite liner to accommodate future landfill disposal needs. For more discussion regarding the potential excavation and relocation of waste within Modules 1, 2, 10, and 11, see the discussion of Excavation of Existing Solid Waste. In addition, any new modules constructed within the existing permitted landfill footprint or on the western property would include Subtitle D-compliant double-composite landfill liner systems. The existing and future liner system is illustrated on Figure 1-8.

Leachate Management System – The LCRS is designed to provide efficient collection and removal of liquids that come into contact with and leach through the waste mass (leachate) and meet the requirements of CCR Title 27 and Subtitle D. The LCRS design at the WRSL has evolved over time and differs between modules, as described in the Landfill Module Development Phasing discussion included in Chapter 1. However, the overall system generally consists of a gravel layer as part of the base liner system that serves to direct leachate to a low area, or sump. Riser pipes extend down to the base of the sump and include a dedicated pump to facilitate regular removal of leachate from the landfill. Leachate extracted from the sumps is conveyed through a series of pipes to the sanitary sewer via a maintenance hole located north of the LFG blower and flare station. The expansion of the LCRS associated with landfill expansion would include the extension of the gravel layer of the base liner system and the installation of additional riser and collection pipes. The removed leachate would continue to be conveyed through the expanded collection pipe system to the maintenance hole north of the flare station. The construction of an LCRS associated with western property landfill expansion would be of the same design as the center property. The leachate collection system on the western property landfill would be connected to either a new connection to an expanded sanitary sewer line or to the center property for leachate disposal via the maintenance hole north of the flare station for disposal.

Surface Water Management System – The WRSL's surface water management system consists of drainage ditches, berms, culverts, and down-drains that direct stormwater through a perimeter channel to two existing detention basins: one located in the site's northeastern corner and the other located in the wetland area in the site's southwestern corner. Similar surface water control infrastructure would be installed at the landfill on the western property. This infrastructure would include drainage ditches, berms, culverts, down-drains, and a perimeter channel. Additional stormwater detention ponds would also be installed, as described in the discussion of supporting facilities in the following sections. This stormwater management infrastructure would be sized to accommodate the 1,000-year, 24-hour storm event as required by Title 27 CCR §20365. The detention basins would be designed to release controlled flows into existing offsite drainage channels, as required by Placer County standards.

Landfill Gas Management System – Anaerobic bacterial digestion of buried waste produces LFG. Only the organic fraction of the landfilled waste will decompose and produce LFG. LFG is composed predominately of equal parts methane and carbon dioxide, both odorless gases. LFG also includes trace amounts of VOCs, sulfur-based compounds, and ammonia, all of which can contribute to LFG odors. The WRSL's LFG management system, described in Section 1.3.6.9, would be expanded as the WRSL expands, including the construction of additional LFG extraction wells and support structures and facilities. Figure 3-11 shows the anticipated expansion of the LFG management system.

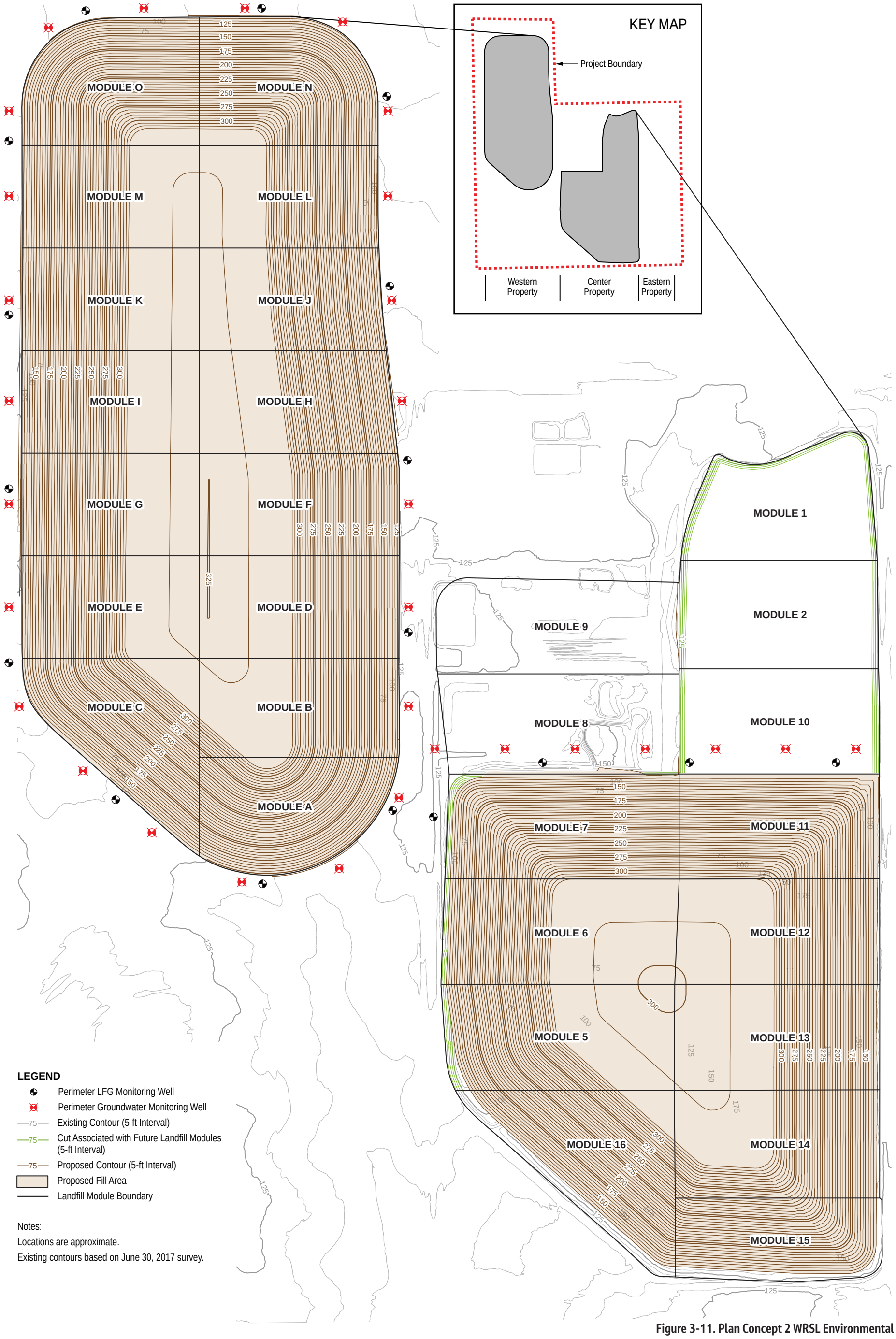

Figure 3-11. Plan Concept 2 WRSL Environmental Monitoring Systems
Draft Environmental Impact Report
Renewable Placer: Waste Action Plan
Placer County, California

Jacobs

While the enclosed ground flare is currently sized to combust all of the LFG generated by the current landfill when needed (and will be upgraded as necessary in the future), the WPWMA intends to continue using the LFG to produce and sell electricity (currently via a third-party energy developer) as a beneficial reuse. In addition, a component of Plant Concept 2 includes the construction of an LFG to compressed natural gas, hydrogen or other renewable fuel facility on the center property (Figure 3-7). This facility is described in more detail under the discussion of complementary and programmatic elements in this chapter. With the installation of this facility, the WPWMA would have the ability to produce and sell vehicle-grade or pipeline-grade compressed natural gas, hydrogen or other renewable fuels.

A new LFG collection system would need to be installed on the western property that would include extraction wells and support structures and facilities. The LFG associated with the western property landfill would initially be conveyed to the existing flare system on the center property until sufficient gas is generated to convert it to energy. At that time, the LFG from the western property would likely be piped to the proposed LFG-to-fuels facility on the center property.

As described in Chapter 1 (Section 1.6.3.10), the WPWMA implements BMPs in order to minimize the potential for offsite odors from LFG. In addition to the existing BMPs, the WPWMA would implement a SWOP for the proposed project (Appendix C.6), which includes additional BMPs for the WPWMA's LFG management system.

Groundwater Monitoring System – Groundwater monitoring is performed on a quarterly basis at the WRSL in accordance with the Monitoring and Reporting Program (MRP) described in WDR Order No. R5-2007-0047 (CVRWQCB 2007). The groundwater monitoring network consists of 39 groundwater monitoring wells across the site as follows:

- 12 wells associated with the Corrective Action Program (CAP) (MW-5, CW-5S, CW-5M, CW-5D, MW-9, CW-9S, CW-9M, CW-9D, MW-10, MW-11R, MW-13, and MW-23R) sampled quarterly
- 24 downgradient wells associated with the Detection Monitoring Program (MW-2, MW-3, MW-6, MW-7, CW-7S, CW-7M, CW-7D, MW-8, MW-12, MW-14 through MW-18, CW-19S, CW-19M, CW-19D, MW-22, MW-24, CW-25S, CW-25M, and CS-25D sampled semiannually, and MW-19 and MW-20 sampled quarterly)
- 2 upgradient (background) wells (LW-1 and MW-4) sampled annually
- Well MW-1 used for water level monitoring only

The 15 "CW" cluster wells were installed to monitor the shallow (-S), intermediate (-M), and deep (-D) intervals of the uppermost water-bearing zone and are sampled by using a portable electric submersible pump. All other monitoring wells are screened in the uppermost water-bearing zone and, with the exception of well LW-1, are equipped with a dedicated submersible pump used for purging and to retrieve groundwater samples. Well LW-1 is purged and sampled by using a disposable bailer. A similar and expanded groundwater monitoring system would be installed to accommodate the expansion of the WRSL.

Achievement of Project Objectives – The proposed changes to the landfill environmental monitoring and control systems would help the WPWMA achieve project objectives, including the following:

- Complying with applicable regulations
- Conducting operations in the most environmentally responsible manner possible

Excavation of Existing Solid Waste

Summary

Table 3-25 summarizes the existing environmental baseline conditions related to excavation of existing solid waste and how implementation of Plan Concept 2 would change those conditions.

Table 3-25. Summary of Solid Waste Excavation Changes Under Plan Concept 2

Environmental Baseline	Plan Concept 2	Change
Modules 1, 2, 10, and 11 are closed, and no additional will be placed in these modules	Modules 1, 2, 10, and 11 would be excavated and the contents relocated within 3 years to an onsite Subtitle D-compliant module; Excavated modules would be lined with a Subtitle D-compliant liner and reused for future Waste Disposal	Buried waste would be excavated and relocated within 3 years; Excavated modules would be reused for expanded solid waste operations

Detailed Description

Physical Waste Relocation Activities – Plan Concept 2 includes excavating the contents of Modules 1, 2, 10, and 11, which encompass approximately 66 acres, within 3 years (starting in 2024) following project approval to accommodate the expansion of composting, C&D processing, and public waste drop-off uses on the center property.

Waste relocation activities at the pre-Subtitle D area would include removing leachate and LFG collection infrastructure, buried waste, soil cover, and as appropriate, any underlying soils affected by a release from the landfill and posing a threat to water quality or the environment. The estimated total volume of waste material within the pre-Subtitle D modules is 3,646,000 cy (Golder Associates Inc. 2018). This includes final cover soils, Class III nonhazardous solid waste, and daily and interim soil cover. The Class III nonhazardous solid waste is assumed to include mixed municipal wastes, C&D debris, yard wastes and rubbish, and inert materials such as concrete and white goods (for example, appliances) (Golder Associates Inc. 2018). The excavated waste would be relocated to a Subtitle D-compliant lined module within the permitted landfill footprint. The relocation of the contents of these modules is estimated to require a total of 300 days to complete but may be implemented in phases (Golder Associates Inc. 2018).

A contractor is likely be hired to conduct the excavation activities and would be responsible for identifying, on a daily basis, the area of excavation and for stripping the existing final cover soils that are not affected by waste. The contractor would stockpile these soils in a designated area. The contractor would excavate the remainder of the contents, including waste and commingled cover soils, and place them into trucks for transport to the designated disposal areas onsite. WPWMA staff would be responsible for disposing of the waste materials in conformance with site permits and applicable laws and regulations. Excavation would proceed until reaching the base of waste. Excavation would progress laterally across the designated excavation area. Trained personnel provided by the contractor would observe the excavation process to identify any nonconforming waste materials, including hazardous waste, which would be sent offsite for proper handling and would not be relocated to an onsite landfill module for reburial. Trained personnel provided by the contractor would also observe the exposed subgrade soils to identify any areas that may be affected by a release from the landfill (Golder Associates Inc. 2018).

Available geologic information indicates that the pre-Subtitle D area lies primarily above stream-laid alluvial deposits of arkosic gravel, sand, silt, and clay. In some areas, it is anticipated that excavation would extend into the underlying gravel, sand, silt, and clays. Actual grades and conditions may vary and would be determined at the time of excavation. Anticipated excavation depths range from 10 to 66 feet, based on available information. Waste relocation activities would include excavation and stockpiling of almost 428,000 cy of final cover soil that is not anticipated to be significantly affected by waste materials (Golder Associates Inc. 2018). The clean cover soils would be reused elsewhere on the site as landfill cover or as temporary fill in excavated areas.

The contractor would be responsible for covering exposed waste at the end of each work day with a minimum of 6 inches of compacted earthen material or an approved alternative daily cover (for example, tarps) to control vectors, fires, odors, blowing litter, and scavenging. The contractor would place intermediate cover over exposed waste and temporary waste slopes where no additional waste excavation or waste relocation work would occur within 180 days. Intermediate cover would consist of a minimum 1-foot-thick layer of compacted earthen material, including daily cover soil. There are no approved alternative materials for intermediate cover. The intermediate cover would protect otherwise exposed waste, thereby controlling vectors, fires, odors, blowing litter, and scavenging during any potential lapses in waste relocation activities (Golder Associates Inc. 2018).

The contractor would provide for positive drainage at the top of excavation slopes to control stormwater run-on into the excavation. The remaining excavation would be graded such that precipitation from the 100-year, 24-hour design storm would drain and prevent water from rising above the waste at the toe of the temporary waste slope. This would prevent ponding water from posing a threat for seeping into buried waste and causing a potential for leachate development. WPWMA personnel or their designee also would visit the site after precipitation events that exceed 1 inch in 24 hours of rainfall and verify that ponded water is pumped to stormwater if clean or to sewer if not, as needed. Slopes that would be cut from native soils would be constructed without intermediate cover (Golder Associates Inc. 2018).

Excavated areas to be developed with a Subtitle D composite liner system would be graded at roughly 1.5 to 3.5 percent to flow to the eastern central edge of the excavation. Areas to be developed for other solid waste facilities would receive earthfill to the design grades. Slopes would be seeded at the conclusion of construction to control erosion. Additional erosion controls, such as diversion berms, hay bales, and straw wattles, would be used as necessary during construction in accordance with applicable surface water pollution prevention plans (Golder Associates Inc. 2018).

Although it is anticipated that primarily MSW would be encountered, there is the potential to encounter hazardous or nonconforming wastes during the waste relocation. Hazardous wastes are defined in Title 22 of CCR Section 66261.3. Hazardous wastes have the following characteristics:

- They are ignitable, corrosive, reactive, or toxic.
- They have the potential to cause or significantly contribute to an increase in mortality or an increase in serious irreversible or incapacitating reversible illness.
- They have the potential to pose a substantial present or potential hazard to human health or the environment, because of factors including their carcinogenicity, acute toxicity, chronic toxicity, bioaccumulative properties, or persistence in the environment, when improperly treated, stored, transported, or disposed of, or otherwise managed.

Nonconforming wastes comprise other waste material that is not accepted at the landfill, excluding hazardous waste, and include the following:

- Wastes containing soluble pollutants in concentrations that exceed applicable water quality objectives, or that could cause degradation of waters of the state, according to *California Water Code* Section 13173.
- Cathode ray tubes from televisions and computer monitors.
- Electronic wastes such as televisions and refrigerators.

The contractor would be required to develop and implement a contingency plan in case hazardous or nonconforming wastes are encountered during waste relocation. The contractor would be required to base the contingency plan on guidelines issued by the State of California Governor's Office of Emergency Services (CA OES 2001).

Waste Excavation Odor Control – The BMPs included in the SWOP (Appendix C.6) to be implemented for the proposed project associated with landfill operation would apply to waste excavation activities.

Reuse of Excavated Waste Modules – Because Modules 1, 2, 10, and 11 have been closed, they have reached their peak elevation of approximately 170 feet AMSL, and no additional waste can be placed on top of the modules. However, if the waste is removed from these modules, they can be reused for solid waste activities after the excavated area is filled. Plan Concept 2 includes reusing the excavated modules for the expanded composting, C&D processing, public waste drop-off, recovered materials storage, and alternative technologies pilot study uses. To accommodate these uses, within 3 years following project approval, the excavated area would be filled to surrounding elevations with available onsite soil to provide a flat working surface.

Achievement of Project Objectives – The excavation of existing solid waste would help the WPWMA achieve several project objectives, including the following:

- Maintaining a stable and relatively predictable cost structure
- Extending the operational life of the current WPWMA facility
- Increasing the height of parts of the landfill to optimize the efficient use of land for Waste Disposal
- Providing sufficient Waste Disposal capacity to accommodate anticipated long-term growth

3.6.4 Complementary/Programmatic Elements

Summary

Table 3-26 summarizes the existing environmental baseline conditions related to complementary and programmatic elements and how implementation of Plan Concept 2 would change those conditions. Plan Concept 2 generally locates the 1.9 million square feet of complementary elements on the eastern property and the southern extent of the western property, with some activities on the center property. For purposes of this EIR, up to 300,000 square feet of building associated with the complementary elements plus associated outdoor infrastructure are considered at a project level. For purposes of analysis, these industrial uses are assumed to be located on the northern part of the eastern property (Figure 3-7).

Table 3-26. Summary of Complementary and Programmatic Elements Under Plan Concept 2

Environmental Baseline	Plan Concept 2	Change
Grazing operations on the eastern property, solid waste operations on the center property, and irrigation and model airplane operations on the western property	Project Level – Development of up to 300,000 square feet of building plus exterior infrastructure for complementary solid waste management elements; Industrial uses may include compatible technologies, pilot study areas, university research areas, and an LFG to compressed natural gas, hydrogen, or other renewable fuels area Program Level – Up to 1.6 million square feet of industrial uses that are complementary to the solid waste management elements	Project Level – Development of up to 300,000 square feet of industrial uses Program Level – Development of up to 1.6 million square feet of industrial uses
	Project Level – Located on the northern part of the eastern property Program Level – Primarily on the eastern property, plus locations on the center property, although some uses may be developed in closer proximity to the solid waste project elements or within areas not yet developed with solid waste project elements	Project Level – Complementary and programmatic elements on the northern part of the eastern property Program Level – Complementary and programmatic elements on the eastern property

Detailed Description

The complementary and programmatic elements include the development of compatible technologies, pilot study areas, university research areas, and an LFG to compressed natural gas, hydrogen or other renewable fuel-production and vehicle-filling area. On the project level, these are assumed to be located on the northern part of the eastern property and may include compatible technologies or pilot studies. On a program level, areas have been designated on the remainder of the eastern property and in the southern parts of the western property to accommodate development of compatible technologies and university research uses. Potential pilot studies are proposed to be located in these areas in addition to areas east of the MRF operations on the center property. The LFG to fuel-production and vehicle-filling area, is proposed to be located in the northern part of the eastern property.

The complementary and programmatic elements are anticipated to include solid waste-oriented industrial uses that could include warehouses, light-manufacturing plants, processing plants, research and development labs, offices and other supporting infrastructure. The allowable uses are dictated by the site's land use and zoning designations identified in the Sunset Area Plan (Placer County 2018). The applicable Sunset Area Plan goals, policies, design guidelines, and land use and zoning designations are described in detail in the Concept Plan 1 discussion of complementary and programmatic elements.

Although space has been reserved for these elements primarily within the western and eastern properties (Figure 3-7), opportunities may arise that would support locating some of these complementary and programmatic elements in closer proximity to the solid waste project elements or within areas not yet developed with solid waste project elements. Additionally, the entire site includes a single land use designation (EI) and a single zoning designation (ECO). Therefore, the uses allowed within those land use

and zoning designations are presumed to be acceptable anywhere on the site that does not include a conflicting use (for example, the landfill mound).

Sunset Area Plan Preliminary Phasing and Building Assumptions. As previously described under Plan Concept 1, the development of the Sunset Area Plan was divided into two phases: Phase 1, which identified the estimated market demand for development that could occur within a 20-year plan horizon; and Phase 2, which identified the remaining land development likely to occur beyond a 20-year plan horizon (Ascent Environmental 2018). Over the Phase 1 development period for the Sunset Area Plan, 1,946,325 square feet of industrial uses were estimated to be built on the project site (Table 3-3, Ascent Environmental 2018). For consistency with the development assumptions included in the Sunset Area Plan, Plan Concept 2 assumes this same square footage of industrial uses would be developed on the project site within the timeframe of the Waste Action Plan implementation, which extends to 2050.

Potential Compatible Technology Development. The WPWMA has been approached by several companies interested in developing compatible technologies at the site. The types of projects identified by these companies have varied, including wood biomass conversion facilities, anaerobic digesters, organic waste-to-energy projects, the use of pyrolysis, and plastics recycling technologies. One such technology includes producing bioplastics from the acids that are generated by the anaerobic digestion process. These bioplastics can further be converted to energy by feeding them back to the digesters to make biogas. By locating adjacent to the WPWMA solid waste operations, organic materials would be available to support anaerobic facilities, and the chemicals and energy from these anaerobic facilities could be used to manufacture green products such as bioplastics for food packaging. The scale of these compatible technology facilities can vary substantially, depending on the volume of material available from the WPWMA solid waste operations. Any of the potential compatible technologies would need to be consistent with the land use and zoning designations identified in the Sunset Area Plan and would need to be compatible with the WPWMA's ongoing solid waste operations at the site.

As discussed in Section 3.6.2.2 and the previous paragraph, the WPWMA may choose in the future to manage the food waste portion (and potentially other portions) of the organics management operation through anaerobic digestion or other noncomposting technology. Two CalRecycle Program EIRs have been prepared to facilitate the future development of an anaerobic digester. The first of these, prepared in 2011, is the *Program Environmental Impact Report for Statewide Anaerobic Digester Facilities for the Treatment of Municipal Organic Solid Waste*. The CalRecycle policy recognizes that organic wastes are a resource, not just solid wastes that must be disposed. Organic wastes have an energy value that can be captured and used, and are also a necessary component of compost, soil amendments, and other useful products. The Final Program EIR and associated background and guidance documents can be found on the CalRecycle website: http://calrecycle.ca.gov/SWFacilities/Compostables/AnaerobicDig/default.htm#EIR.

The second Program EIR, prepared by CalRecycle in 2019, is the Program EIR for SB 1383 *Regulations Short-Lived Climate Pollutants: Organic Waste Methane Emission Reduction*. SB 1383 requires redirection of a substantial amount of organic waste from landfill disposal. An estimated 26.8 million tons of organic waste in the state would need to be redirected from landfill disposal in 2025, with the amount of material to be redirected to increase in the years thereafter. The Program EIR was prepared to analyze the potential environmental impacts of implementing the SB 1383 regulations. CalRecycle considered a number of reasonably foreseeable compliance responses associated with implementing SB 1383 regulations. Among these responses is that the redirection of organic waste from landfills would be reasonably expected to result in the development of new or expanded organic Waste Recovery and edible food recovery facilities in the state. The Program EIR considers the following significant types of compliance responses for the management of food waste: compost, anaerobic digestion, chipping and grinding, and recycling. The Final

Program EIR and associated background and guidance documents can be found on the CalRecycle website: https://www.calrecycle.ca.gov/laws/rulemaking/slcp.

If the WPWMA or a third party were to pursue an anaerobic digestion project at the WPWMA facility as part of the space identified for complementary technologies, the required site-specific analysis under CEQA for such a project could be a tiered document that uses the 2011 CalRecycle Program EIR, the 2019 CalRecycle Program EIR, and this project EIR.

Long-term Development Assumptions. During Phase 2, the Sunset Area Plan EIR estimated that a total of 7,916,600 square feet of industrial development would occur on the project site at full buildout, including the 1,946,325 square feet associated with Phase 1. Full buildout was estimated to take approximately 80 years to complete (Table 4.14-17, Ascent Environmental 2018). This estimate assumes that 605.8 acres of the site would be developed with industrial uses, with a floor area ratio of 0.3 (Ascent Environmental 2018).

The Sunset Area Plan EIR programmatically evaluated the impacts associated with developing this level of industrial uses on the project site. This DEIR incorporates by reference the programmatic analysis of the Phase 2 industrial development included in the Sunset Area Plan EIR. However, because the square footage of industrial development identified in Phase 1 would be sufficient to meet the project objectives, and the industrial demand beyond 2050 would be speculative, the implementation of Phase 2 development assumptions on the project site are not considered a component of Plan Concept 2.

Achievement of Project Objectives. The complementary and programmatic elements would help WPWMA achieve several project objectives, including the following:

- Maintaining a stable and relatively predictable cost structure
- Expanding the diversion of materials from the landfill
- Reducing GHG emissions
- Enhancing operational flexibility
- Conducting operations in the most environmentally responsible manner possible
- Facilitating the siting and development of compatible technologies that would benefit from proximity to WPWMA
- Developing the properties in a manner consistent with the Sunset Area Plan

3.6.5 Supporting Elements

Summary

Table 3-27 summarizes the existing environmental baseline conditions related to supporting elements and how implementation of Plan Concept 2 would change those conditions.

Table 3-27. Summary of Supporting Elements Under Plan Concept 2

Environmental Baseline	Plan Concept 2	Change
Materials recovered from the MRF operations are stored either within or outside of the MRF building, depending on space constraints	New recovery materials storage building	Construction of a new building and increased ability to store recovered materials inside
Stormwater ponds on center property	New and expanded stormwater ponds on western and center properties	Additional stormwater ponds associated with expanded solid waste operations
Road crossings between center and western property limited to public roads	Separated crossing of Fiddyment Road that would connect center and western properties	Improved access for solid waste operations between center and western properties
Maintenance facility on the center property	Center property maintenance facility would be upgraded, and a new maintenance facility would be constructed on the western property for WRSL operation	Upgraded maintenance facility on center property and new maintenance facility on western property
Administration building on the center property	New administration building with education center parking	A second administration building with and education center and parking
Entrance facilities on Athens Avenue	Upgraded Athens Avenue entrance facilities	Improved site access and scale house infrastructure
Restricted dirt road access to western property at the Fiddyment Road and Athens Avenue intersection	New paved site entrance to western property at the Fiddyment Road and Athens Avenue intersection	Access provided to the western property for expanded landfill operations
Wastewater and fire protection water line used for the existing public waste drop-off area operations	A new wastewater and fire protection water line extending to the western property would be necessary to service the expanded landfill operations	Installation of new wastewater and fire protection water line in Fiddyment Road
LFG-to-energy plant operations on center property	Continued LFG-to-energy plant operations on the center property	No change in LFG-to-energy plant operations
Landscaping and fencing located along section of the center property	Landscaping and fencing would surround entire project site	Expanded perimeter landscaping and fencing

Detailed Description

The WPWMA facility currently includes a number of elements that support ongoing solid waste operations at the site. These existing elements are primarily located in the northern part of the center property (Figure 1-3). Plan Concept 2 (Figure 3-7) includes modifications to many of these elements and the addition of new elements. These supporting elements are described in further detail in the following subsections and include recovered materials storage areas, stormwater ponds, a road crossing, maintenance areas, administration buildings, facility parking, entrance facilities, wastewater and water supply infrastructure, the existing LFG-to-energy plant, and site perimeter infrastructure.

Recovered Materials Storage Building – When materials recovered from the MRF operations exceed the capacity of storage areas within the MRF building, they are stored outside. The outside storage of these materials can degrade their value as a result of weather exposure and can also have stormwater impacts. The construction of a recovered materials storage building is proposed to protect recovered MRF materials from weather exposure prior to being transported offsite as well as to keep stormwater from contacting these materials. The enclosed storage building would be approximately 70,000 square feet in size and would be located generally to the east of the MRF building.

Stormwater Ponds – The project site includes two existing stormwater ponds: one located in the northeastern corner of the center property and one located directly east of the MRF building. The site also includes two compost leachate retention basins adjacent to the existing composting operations in the northern part of the center property. Plan Concept 2 proposes to relocate the stormwater pond located directly east of the MRF building and to construct additional stormwater ponds throughout the site. New stormwater ponds are currently proposed at the northern end of the western property and the southwestern end of the center property. However, the locations of these ponds may vary depending on how the solid waste elements are built out. The ponds that would capture stormwater from the relocated composting, public waste drop-off, and C&D areas would be sized based on a 100-year, 24-hour intensity precipitation event, and the landfill stormwater ponds would be sized for a 1,000-year, 24-hour intensity precipitation event, consistent with Class II landfill requirements.

Road Crossing – On Fiddyment Road, south of Athens Avenue, a new separated road crossing is proposed to be installed to connect the waste operations on the center property to those proposed on the western property. This crossing is located further north than identified for Plan Concept 1. The purpose of this crossing is to allow WPWMA and operator staff to easily cross Fiddyment Road to access the western property while avoiding driving solid waste vehicles on public roads. Three crossing alternatives are being considered, including under crossings with and without retaining walls, overcrossings with and without retaining walls, and a conveyor system for transporting recovered materials. The following initial assumptions were used for these vehicle crossings (however, they will be built to County standards). Vehicle crossings are assumed to include two 12-foot lanes with 4-foot shoulders and a 25-mile-per-hour design speed. If an overcrossing is built, it would include 16 feet 6 inches of vertical clearance. Because the WPWMA has not yet selected a preferred road crossing, all three of these options are being evaluated in this EIR.

Maintenance Areas – The existing maintenance facility on the center property is proposed to be upgraded to support the expanded solid waste operations. This upgrade includes constructing an approximately 12,000-square foot building with expanded pad space. A second satellite maintenance facility is proposed in the central part of the western property to support waste disposal operations. This satellite maintenance facility would include an 8,500-square foot building with space for administrative offices and parking.

Administration Building and Parking – A new or expanded administration building is proposed near the existing administration building in the northwestern corner of the center property to accommodate additional staff offices and parking. A new building would contain approximately 12,400 square feet, including approximately 2,400 square feet for an education center and an approximately 25,000-square foot parking area.

Entrances – The existing Athens Avenue waste delivery entrance facilities in the northern part of the center property are proposed to be redesigned and realigned to better accommodate anticipated future traffic loading. Improvements include new entrance roadways, a new scale building, and three scales (two inbound scales and one outbound scale).

To provide access to the western property, a new site entrance is proposed in the southwestern corner of the Athens Avenue and Fiddyment Road intersection. This new entrance would provide access to the new landfill proposed on the western property. The western entrance would include a scale building and two new scales (one inbound scale and one outbound scale).

Wastewater and Water Supply Infrastructure – The development of new landfill area on the western property would require the installation of a wastewater line and fire protection water line extending from the Fiddyment Road and Athens Avenue intersection south along Fiddyment Road to the Sunset Boulevard and Fiddyment Road intersection. These lines would extend for approximately 5,300 linear feet.

Landfill Gas-to-Energy Plant – No changes are proposed to the existing LFG-to-Energy Plant located in the northeastern part of the center property with implementation of Plan Concept 2.

Landscaping and Perimeter Fencing – Landscaping and irrigation would be installed at the administrative building, main entrance, and along the site perimeter. In addition, fencing would be installed along the site perimeter.

Any building square footage associated with these supporting element uses is assumed to be included in the total square footage of industrial uses identified in the Sunset Area Plan for the site.

Achievement of Project Objectives – The supporting elements would help the WPWMA achieve several project objectives, including the following:

- Maintaining a stable and relatively predictable cost structure
- Improving operational efficiencies
- Enhancing customer safety by improving site access and internal circulation
- Enhancing operational flexibility
- Conducting operations in the most environmentally responsible manner possible
- Developing the properties in a manner consistent with the Sunset Area Plan

3.7 References

California Governor's Office of Emergency Services (CA OES). 2001. *Guidelines for Developing a Facility's Consolidated Hazardous Materials and Waste Management Plan* (Draft). November.

CalRecycle. 2011. *Program Environmental Impact Report for Statewide Anaerobic Digester Facilities for the Treatment of Municipal Organic Solid Waste*.

CalRecycle. 2019. *Final Program Environmental Impact Report for Statewide Anaerobic Digester Facilities for the Treatment of Municipal Organic Solid Waste*.

Golder Associates Inc. 2017. *Joint Technical Document, Western Regional Sanitary Landfill, Placer County, California, Volume I*. Revised by Western Placer Waste Management Authority. August.

Golder Associates Inc. 2018. *Pre-Subtitle D Area Waste Relocation Workplan, Western Placer Waste Management Authority*. September.

Oddo, Eric, Program Manager, Western Place Waste Management Authority. 2020. Personal communication with Brenda Eells, Jacobs. October.

Placer County. 2018. *Sunset Area Plan/Placer Ranch Specific Plan Draft Environmental Impact Report* (State Clearinghouse No. 2016112012). December.

Western Placer Waste Management Authority (WPWMA). 2014. *Western Placer Waste Management Authority Materials Recovery Facility, Transfer/Processing Report and Report of Composting Site Information, Final*. Revised December.

4. Approach

This chapter provides additional information regarding the history and details of various approaches taken in this Environmental Impact Report (EIR). Section 4.1 explains the process by which the Western Placer Waste Management Authority (WPWMA) Board chose to evaluate two plan concepts to implement the Renewable Placer: Waste Action Plan (Waste Action Plan). Section 4.2 describes the preferred concept and the process used by the WPWMA to make that determination. Section 4.3 describes the relationship between the Waste Action Plan and this EIR and the Sunset Area Plan (SAP) and SAP EIR. Section 4.4 describes which elements of the Waste Action Plan are evaluated in this EIR at a project level and which are evaluated at a programmatic level. Section 4.5 provides additional environmental baseline information, particularly areas where the current environmental condition differs from the project environmental baseline. Section 4.6 describes the WPWMA's current process for soliciting Materials Recovery Facility (MRF) proposals for a future operating agreement and how the Request for Proposals (RFP) responses align with the environmental analysis contained in this EIR. The future MRF Operator contracts could have a duration less than the period evaluated in this EIR, and for the purposes of this EIR the duration assumed is 10 years.

4.1 Evaluation of Two Plan Concepts to Implement the Renewable Placer: Waste Action Plan

This section provides a brief history of the actions leading to preparation of this Draft EIR (DEIR) that culminated in the decision to evaluate two plan concepts to implement the Waste Action Plan (WPWMA 2020).

The Waste Action Plan was developed to identify the physical and operational Waste Recovery and Waste Disposal changes that are needed at the WPWMA facility to continue to provide high-quality solid waste management services in response to a fast-growing population in an increasingly complex regulatory environment and rapidly changing global recycling markets.

At its October 13, 2016 meeting, the WPWMA Board of Directors approved a phased agreement with CH2M[15] to provide consulting services in support of the Waste Action Plan. Phase I of the agreement consisted of development of facility Plan Concepts to address future operational needs.

At the onset of the project, the WPWMA convened an Advisory Committee composed of key staff from each of the WPWMA's Member Agencies to provide input and serve as a conduit between the WPWMA and Member Agency leadership groups throughout the process. The Advisory Committee agreed that, should future operations be limited, jurisdictions would be better served by the WPWMA continuing to provide recycling and waste diversion services rather than landfill capacity.

Under Phase I, the Consulting Team prepared numerous technical evaluations including waste projections and waste processing adjacency study, aquatic resources delineation, and preliminary cultural resources and geotechnical evaluations. The Consulting Team incorporated these initial technical findings, and worked with WPWMA staff and the Advisory Committee to develop several potential facility Plan Concepts that were later refined to the following three:

[15] On December 15, 2017, all CH2M companies became part of Jacobs Engineering Group Inc. (Jacobs) and are now wholly owned direct subsidiaries of Jacobs. CH2M HILL Engineers, Inc., will remain a separate legal entity, and we will continue to operate and conduct business under this entity. This report will have references to both CH2M and Jacobs; however, they should be viewed as one-and-the-same company, and the company names can be used interchangeably. For continuity with other documentation, CH2M (Jacobs) and its subcontractors will be referred to as the Consulting Team.

- **Plan Concept 0**: Existing Site Reconfigured – Conduct all future solid waste operations exclusively on the existing permitted central property.
- **Plan Concept 1**: Landfill East – Designates the eastern property for future landfill operations as necessary. MRF and construction and demolition operations would remain on the existing property, an organics management and space reserved for third-party compatible manufacturing operations would be located on the western property.
- **Plan Concept 2**: Landfill West – Designates the western property for future landfill operations, as necessary, and maintains non-landfill operations on the existing center parcel. The eastern property would be reserved for third-party compatible manufacturing operations and/or biological reserve.

In an effort to achieve an understanding of regional needs and to develop a consensus of the Waste Action Plan purpose and process, the Consulting Team and WPWMA staff engaged stakeholder groups to solicit feedback. The Consulting Team incorporated Advisory Committee and stakeholder feedback as Plan Concepts were compared using Multi-Objective Decision Analysis (MODA) and present value economic analysis.

The MODA process was designed to provide a quantifiable, objective, robust, and transparent method for comparing the Plan Concepts by analyzing nonmonetary aspects based on a series of criteria. The criteria were developed with the Member Agency Advisory Committee to reflect the project goals and priorities most important to the WPWMA, Member Agencies, and key stakeholders, as well as to provide a reasonable level of differentiation between the Plan Concepts. The WPWMA Board approved the MODA criteria at its September 13, 2018 meeting.

The Consulting Team led WPWMA staff and the Member Agency Advisory Committee through a weighting exercise to provide feedback on the relative importance of each criterion. The Consulting Team then independently scored how well each Plan Concept met the criteria and applied WPWMA staff and Member Agency Advisory Committee weighting factors to determine the final MODA score.

As shown in Table 4-1 (as presented at the December 2018 Board meeting), Plan Concept 1 had the highest and most optimal MODA score.

Table 4-1. Plan Concept Final MODA Scores by Reviewer Profile

Profile	MODA Score		
	Plan Concept 0	Plan Concept 1	Plan Concept 2
WPWMA staff	33.9	75.1	52.9
Advisory Committee	34.4	75.8	53.0

The Consulting Team then conducted an economic analysis, the purpose of which was to produce an annualized cost in current (2018) dollars for each Plan Concept and to identify when significant changes in capital and operating expenditures were projected to be necessary. For comparison purposes, the project time frame was equal to the longest landfill life expectancy of the three Plan Concepts.

The economic analysis results were intended to provide general insight into the budgetary-level costs needed to achieve the goals for each Plan Concept over the entire life of the evaluation period, and included only the capital, operating, and overhead costs for the elements identified in the Plan Concepts. Other costs or revenues that may be realized in the future outside of the Waste Action Plan were not included (that is, facility renovations, MRF equipment replacement, or compatible technologies).

The economic analysis resulted in the following preliminary annualized cost estimates (including capital and operating costs) for each Plan Concept:

- Plan Concept 0 (Existing Site): $74,100,000
- Plan Concept 1 (Landfill East): $50,700,000
- Plan Concept 2 (Landfill West): $59,800,000

For the WPWMA to better understand the immediate financial impacts of each plan concept, the Consulting Team developed the Initial Capital Cost Estimates for each plan concept. The initial capital costs (provided in 2018 dollars) do not factor in construction timing, replacement costs, or the time value of money as considered in the present value analysis. In other words, these costs are the equivalent of all elements within each Plan Concept being constructed in its entirety within year 2018. The initial capital costs for each of the Plan Concepts are summarized in Table 4-2.

Table 4-2. Initial Plan Concept Costs

Plan Concept	Probable Cost
0 – Existing Site	$352,250,000
1 – Landfill East	$521,233,000
2 – Landfill West	$640,364,500

Plan Concept 1 had the lowest annualized cost. A detailed description of the process by which each Plan Concept was developed, the MODA process, and the economic evaluation is included in the Renewable Placer: Waste Action Plan Phase I Concept Evaluation Report, February 2019, which can be found on the Renewable Placer website: https://renewableplacer.com/stay-informed/

Based on the results of the MODA process and economic analysis, Plan Concept 1 was found to best meet the needs of the WPWMA and its Member Agencies at the lowest relative cost. As a result, it was recommended that the WPWMA Board select Plan Concept 1 as the preferred option for the purposes of conducting a detailed environmental review consistent with the California Environmental Quality Act (CEQA) guidelines. Other options were presented to the WPWMA Board as follows:

- Proceed with environmental review with Plan Concept 2 as the preferred option.
- Proceed with environmental review with Plan Concept 1 and Plan Concept 2 as equal weight alternatives.
- Terminate or suspend the master planning process and operate within the current permit conditions.

Ultimately, the WPWMA Board directed staff at its December 13, 2019, meeting to initiate the CEQA process and evaluate Plan Concepts 1 and 2 at an equal level of detail.

4.2 Preferred Plan Concept

As described in Chapter 1, Introduction, and elsewhere in this EIR, the proposed project is implementation of the Waste Action Plan, and Plan Concepts 1 and 2 have been identified as two options for implementing the Waste Action Plan. Accordingly, Plan Concepts 1 and 2 have been evaluated at an equal level of detail in this EIR.

However, recent court rulings (including Washoe Meadows Community v. Department of Parks & Recreation (2017) 17 Cal. App. 5th 277) are applicable to EIRs that evaluate a range of possible project

alternatives at an equal level of detail. In Washoe Meadows Community v. Department of Parks & Recreation, the First District Court of Appeal ruled that a description of a broad range of possible projects in the DEIR, rather than a preferred or actual project, presented the public with a moving target that was an obstacle to informed public participation. In this case, the DEIR evaluated five vastly different project alternatives, each creating a different footprint on public land and each creating different sets of impacts requiring different mitigation measures.

Consequently, while the WPWMA believes that identification and evaluation of two Plan Concepts to implement the Waste Action Plan provides the public and decision makers with robust review and disclosure regarding the potential environmental impacts associated with implementation of the Waste Action Plan, and although both Plan Concepts would achieve the Waste Action Plan objectives and would meet WPWMA's long-term operational needs, in May 2021, the WPWMA decided to perform an updated financial comparison of the two Plan Concepts to provide information needed to aid in determining a preferred plan concept. The comparison was focused on financial considerations and the previously conducted MODA process.

Using the cost information compiled in the Phase 1 Concept Evaluation Report, the cost estimates were reviewed and revised as appropriate; focusing on conditions that have arisen, or are reasonably foreseeable to arise, that could alter the magnitude or timing of costs. The evaluation consisted of five general steps:

- Step 1. Assessed potential changes to capital cost components.
- Step 2. Updated the timing of capital costs.
- Step 3. Escalated initial capital costs for each Plan Concept.
- Step 4. Escalated initial capital costs during the 10-year construction horizon.
- Step 5. Calculated present value of capital costs during the 10-year construction timeline (2022-2031).

After assessing potential changes to the capital cost components, it was concluded by the Consultant Team that sizing, conceptual design, or throughput assumption changes would not dramatically change the cost estimates for the major capital cost components as they exist, but that the changes could be captured by timing and unit pricing adjustments. Next, the Consultant Team performed construction timing updates for capital costs occurring between 2022 and 2031. Changes were made to better align with the CEQA construction schedule that was being used for other analyses. Once the Consultant Team updated the timing of capital costs, the initial cost estimates were escalated from 2018 dollars to 2023 (first primary year of construction) dollars to account for the surge in construction costs during the past 15 months. The updated initial capital cost estimates are presented in Table 4-3.

Table 4-3. Updated Plan Cost Estimates

Plan Concept	Probable Cost (2023 Dollars)
Plan Concept 1	$604,100,000
Plan Concept 2	$742,200,000

The WPWMA's Consultant Team prepared a year-by-year capital cash flow for near-term (years 2022 through 2031; Figure 4-1) by escalating 2024 and 2025 values by 4.0 percent and 2026 through 2031 values by 2.4 percent, using the Congressional Budget Office, Core Consumer Price inflation values as a

basis for this assumption. The annual capital spending is shown in the year of expenditure (for example, an element in 2028 is shown in 2028 dollars) and the present value for near-term (years 2022 through 2031) capital expenditures in 2021 dollars (Table 4-4).

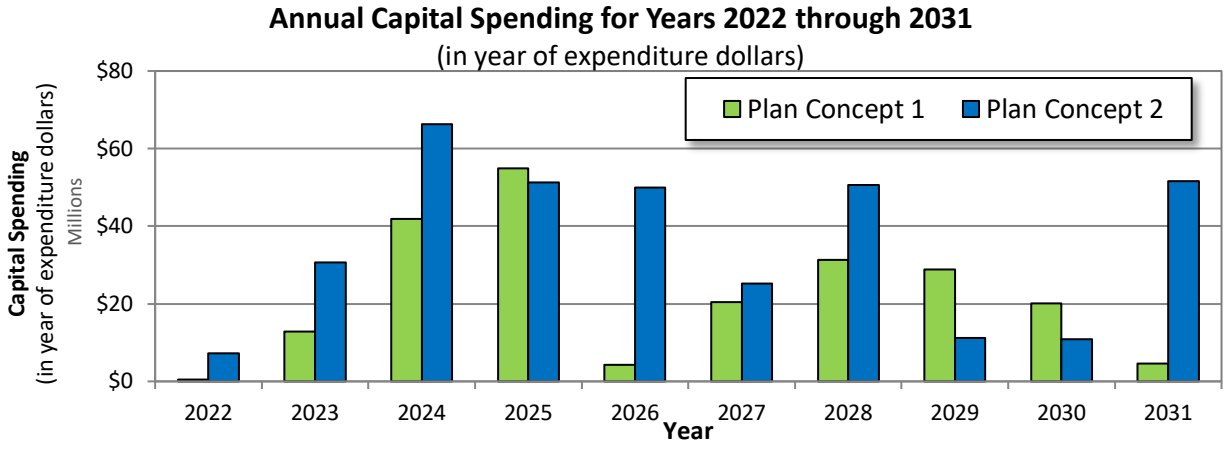

Figure 4-1. Plan Concept Near-Term Annual Capital Spending Estimates
2021 Updated Cost Estimate

Table 4-4. Plan Concept Present Value
2021 Updated Cost Estimate

Plan Concept	Present Value of Capital Costs for Years 2022–2031 (2021 Dollars)	Percent Difference (%)
Plan Concept 1	$174,100,000	n/a
Plan Concept 2	$281,700,000	62

Costs shown in Table 4-4 are provided in 2021 dollars for initial capital costs anticipated to be built from 2022 through 2031 (10-year timeline) only, at a 4.45% nominal discount rate.

Based on the updated financial evaluation, combined with the previously conducted MODA process, the **WPWMA identified Plan Concept 1 as the preferred plan concept**. This is consistent with the previous recommendation and the conclusions from the 2018 Concept Evaluation Report. Chapter 18, Alternatives, compares all alternatives to Plan Concept 1 as the preferred plan concept.

It should be noted that the identification of Plan Concept 1 as the preferred plan concept in this EIR does not preclude the WPWMA Board from selecting Plan Concept 2 to implement the Waste Action Plan, if after WPWMA Board review of the impact conclusions and mitigation measures identified in this EIR, Plan Concept 2 is found to be in the best interests of the WPWMA, Member Agencies, or other stakeholders.

4.3 Relationship of Project to Sunset Area Plan/Sunset Area Plan Environmental Impact Report

The WPWMA facility is located within a community plan identified as the SAP (Placer County 2019a). The SAP was developed by Placer County's Community Development Resource Agency in 2019 and is intended to be used to guide development of the southwestern Placer County area located directly west of State Route (SR) 65 between the Lincoln Crossing and Blue Oaks subdivisions.

The SAP area encompasses 8,497 acres in unincorporated west Placer County. West Placer County is characterized by a mix of urban, suburban, and rural land uses and is influenced by the Sacramento Metropolitan Area. The plan area covers over 13 square miles between the cities of Rocklin to the east, Roseville to the south, Lincoln to the north, and unincorporated Placer County to the west. The SAP includes and recognizes different land uses that reflect the current market demand in the region, which is a mix of industrial, commercial, institutional, and residential uses. A portion of the SAP area is proposed as a specific plan entitled the Placer Ranch Specific Plan (PRSP) area. The 2,213-acre PRSP area is located in the southwestern portion of the SAP area.

The SAP is a policy document intended to guide growth in the SAP area over a 20-year planning horizon; buildout of the SAP area is expected to occur over 80 years or more. An EIR to evaluate the physical environmental effects of the proposed SAP and PRSP was prepared pursuant to CEQA (*Public Resources Code* [PRC] Section 21000, et seq.) and the CEQA Guidelines (*California Code of Regulations* [CCR], Title 14, Chapter 3, Section 1500, et seq.).

The SAP EIR evaluates the potential environmental impacts associated with implementing the SAP and PRSP. In accordance with Section 15168 of the CEQA Guidelines, a program EIR may be prepared on a series of actions that can be characterized as one large project and, among other things, are related geographically or in connection with issuance of rules, regulations, or plans to govern the conduct of a continuing program. Because of the broad geography, long timeframe anticipated for buildout, and policy-oriented nature of the SAP, the impact analysis of the SAP was prepared at a programmatic level—that is, a more general analysis with a level of detail and degree of specificity commensurate with that of the plan itself, focusing on the effects that can be expected to follow from adoption of the plan.

The SAP is divided into seven thematic districts that reflect discrete development opportunities that make up the vision for the SAP area. These districts frame the broader land use patterns and motifs that serve as the vision and the basis for the specific land use designations. One of the seven thematic districts is the Eco-Industrial/Manufacturing/WPWMA District. This district includes the entirety of the existing WPWMA facility on the center property and all of the WPWMA's western and eastern properties. This area focuses on the opportunity to build an integrated eco-industrial and manufacturing district, as it has the parcel sizes to accommodate major users involved in goods production.

The SAP Implementing Zone Regulations include a Zoning Map that identifies the zoning for the proposed project site as Eco-Industrial (ECO). The intent of the ECO Zone is to provide areas for industrial uses that emphasize ecology, waste reuse and sustainable salvaging, and remanufacturing. Remanufacturing uses are defined as operations that produce consumer products with recycled content that can include, for example, facilities that manufacture cardboard boxes made from recycled paper or facilities that produce picnic tables made of recycled plastic pellets. This zone directly serves and is compatible with the ongoing operation of the WPWMA facility. The uses in this zone are intended to allow for manufacturing and remanufacturing, recycling of construction and demolition (C&D) debris, plastics processing, paper conversion, glass processing, and similar industrial uses. The SAP EIR estimated that a total of 7,916,600 square feet of industrial development would occur on the proposed project site at full buildout.

As a primary component of one of the seven thematic districts in the SAP, the SAP EIR programmatically evaluated the environmental impacts that would be anticipated with the expansion of solid waste elements and development of industrial uses on the WPWMA properties consistent with the site's land use and zoning designations. Both Plan Concepts include the development of the WPWMA properties consistent with the land use and zoning designations identified in the SAP. Therefore, the impact analysis included in the SAP EIR is directly applicable to the proposed project.

Agencies are encouraged by CEQA Guidelines Section 15152 to tier the environmental analysis that they prepare for separate but related projects including general plans, zoning changes, and development projects. Tiering includes using the analysis of general matters contained in a broader EIR, such as the SAP EIR, when preparing a later EIR on a narrower project (such as the Waste Action Plan). The use of this tiering approach in EIRs can eliminate repetitive discussions of the same issues and focus the later EIR on the actual issues for decision.

CEQA Guidelines Section 15152(d) states that where an EIR has been prepared and certified for a plan consistent with the requirements of Section 15152, the lead agency for the later project pursuant to or consistent with the plan should limit the EIR on the later project to effects that

- Were not examined as significant effects on the environment in the prior EIR.
- Are susceptible to substantial reduction or avoidance by the choice of specific revisions in the project, by the imposition of conditions, or other means.

This EIR is using the tiering concept and is hereby incorporating by reference the information included in the SAP EIR, in accordance with CEQA Guidelines Section 15150. An EIR may incorporate by reference all or portions of another document that is a matter of public record or is generally available to the public (CEQA Guidelines Section 15150). The SAP EIR is available for review at the following link: https://www.placer.ca.gov/2702/Sunset-Area-Plan---Placer-Ranch-Specific. As appropriate, portions of the SAP EIR relevant to the proposed project's environmental analysis are summarized and addressed in the environmental and regulatory setting sections of each resource chapter.

In addition to the general tiering and incorporation by reference described earlier, there are two specific areas where this EIR tiers off of the analysis included in the SAP EIR, including the approach to the assessment of traffic impacts and the approach to the cumulative impact analysis. Each is described in the sections that follow.

4.3.1 Transportation Approach

Transportation information in this EIR draws from the analysis of transportation and circulation included in the 2019 SAP EIR. Specifically, existing traffic volumes were obtained from the 2018 SAP/PRSP Transportation Impact Study, included as part of the SAP EIR. Additional information and analysis is based on the SAP EIR and 2018 SAP/PRSP Transportation Impact Study, including information related to regional vehicle miles traveled.

4.3.2 Cumulative Approach

The approach to cumulative impacts in this EIR is based on CEQA Guidelines Section 15152(f)(2), which addresses cumulative effects when tiering from an existing document, and which states the following:

> When assessing whether there is a new significant cumulative effect, the lead agency shall consider whether the incremental effects of the project would be considerable when viewed in the context of past, present, and probable future projects. At this point, the

question is not whether there is a significant cumulative impact, but whether the effects of the project are cumulatively considerable.

The Waste Action Plan evaluated in this EIR was foreseen by the SAP and SAP EIR and is included in the cumulative project list in the SAP EIR. Consequently, the cumulative impacts of the proposed project, in conjunction with the development of the SAP and other projects included on the SAP EIR cumulative project list, were addressed in the SAP EIR. This approach is reflected in the cumulative impacts analysis for the proposed project, found in Chapter 19, Cumulative Impacts.

4.4 Solid Waste Elements versus Complementary and Programmatic Elements Addressed in EIR

The degree of specificity required in an EIR corresponds to the degree of specificity involved in the underlying activity described in the EIR (CEQA Guidelines Section 15146). For this reason, a project-level EIR, which addresses projects with effects that can be predicted with greater accuracy, will be more detailed than a program EIR in its discussion of effects. A single EIR can include both a project-level analysis and a program-level analysis when detailed information is known about specific components of a project and less detail is known about other project components.

In accordance with CEQA Guidelines 15161, this document is considered a project EIR for the proposed solid waste management elements. In accordance with CEQA Guidelines Section 15168, this document is also considered a program EIR for the activities that are complementary to the proposed solid waste management activities.

The solid waste management elements include the waste recovery and waste disposal components that are needed to continue to provide solid waste management services to the WPWMA's Participating Agencies in the near and long term. These project elements, plus supporting elements, are described in detail in Chapter 3, Project Description, and evaluated in detail throughout this DEIR at the project level.

In addition to the WPWMA's permitted waste recovery and waste disposal activities, the WPWMA is uniquely positioned to partner with third-party developers to provide services to the Participating Agencies that are important in achieving specific project goals (for example, creating opportunities for innovation and economic growth, enhancing opportunities to increase recycling and landfill waste diversion, and enhancing the ability to comply with regulations). These complementary and programmatic elements, also described in Chapter 3, Project Description, include the following:

- Pilot Study Area – Space would be reserved for third parties to conduct pilot studies using materials and products from the WPWMA's facility and processing them in new ways or producing beneficial products including renewable energy, fuels, and marketable commodities.
- Compatible Manufacturing – Space would be reserved for third-party commercial or full-scale compatible technologies and manufacturing operations that would take materials and products from the WPWMA's facility to produce beneficial products, including renewable energy, fuels, and marketable commodities.
- University Research Area – Space would be reserved for university-led research using materials and products from the WPWMA's facility and processing them in new ways or producing beneficial products including renewable energy and marketable commodities. This could also include more general solid waste-related research to improve facility diversion, increase efficiencies, and lower environmental impacts.

- Landfill Gas (LFG)-to-Compressed Natural Gas Area – Space would be reserved for a potential third party or WPWMA-led facility that would convert LFG to compressed natural gas, hydrogen, or other renewable product that could be used to fuel vehicles operated by local governments, waste hauling companies, or other private companies, or otherwise be transferred to other end users.

Although the waste recovery and waste disposal elements of the proposed project are known and directly under the WPWMA's control, the complementary and programmatic elements are not fully defined at this time. As such, most of these elements are evaluated at a program (programmatic) level in this EIR.

A program EIR is an EIR that may be prepared on a series of actions that can be characterized as one large project, and are related either

- Geographically
- As logical parts in the chain of contemplated actions
- In connection with issuance of rules, regulations, plans, or other general criteria to govern the conduct of a continuing program
- As individual activities carried out under the same authorizing statutory or regulatory authority and having generally similar environmental effects that can be mitigated in similar ways

The use of a program EIR can provide the following advantages:

- Provides an occasion for a more exhaustive consideration of effects and alternatives than would be practical in an EIR on an individual action
- Enables consideration of cumulative impacts that might be slighted in a case-by-case analysis
- Avoids duplicative reconsideration of basic policy considerations
- Allows the lead agency to consider broad policy alternatives and program-wide mitigation measures at an earlier time when the agency has greater flexibility to deal with basic problems or cumulative impacts
- Reduces paperwork

A program EIR is most helpful in dealing with subsequent activities if it deals with the effects of the program as specifically and comprehensively as possible. With a good and detailed analysis of the program, many subsequent activities could be found to be within the scope of the project described in the program EIR, and no further environmental documents would be required.

This EIR has been prepared as both a project EIR and a program EIR, with the intent being to provide as much detail and as robust an analysis as possible about subsequent activities that are complementary to the existing and proposed solid waste management activities.

To ensure consistency with the development assumptions included in the SAP, the proposed project assumes 1,946,325 square feet of complementary industrial uses (1.9 million square feet) would be developed on the project site within the timeframe of the Waste Action Plan implementation, which extends to 2050. Of these 1.9 million square feet of industrial uses, 300,000 square feet are evaluated in this EIR at a project level. The remaining 1.6 million square feet are evaluated in this EIR at a program level.

The SAP EIR estimated that a total of 7,916,600 square feet of industrial development would occur on the project site at full buildout (Phase 2), including the 1.9 million square feet associated with Phase 1 and

evaluated in this DEIR. Full buildout was estimated to take approximately 80 years to complete (Table 4.14-17, Ascent Environmental 2018). Because the square footage of industrial development identified in Phase 1 would be sufficient to meet the project objectives and the industrial demand beyond 2050 would be speculative, the implementation of Phase 2 development assumptions on the project site are not considered a component of the proposed project at either a project or program level in this DEIR.

The SAP Implementing Zone Regulations include a Zoning Map that identifies the project site zoning as ECO. The intent of the ECO Zone is to provide areas for industrial uses that emphasize ecology, waste reuse and sustainable salvaging, and remanufacturing. Remanufacturing uses are defined as operations that produce consumer products with recycled content that can include, for example, facilities that manufacture cardboard boxes made from recycled paper or facilities that produce picnic tables made of recycled plastic pellets. This zone directly serves and is compatible with the ongoing operation of the WPWMA's facilities. The uses in this zone are intended to allow for manufacturing and remanufacturing, recycling of C&D debris, plastics processing, paper conversion, glass processing, and similar industrial uses. The complementary elements of the proposed project are expected to be consistent with the allowable uses of the ECO Zone.

Additionally, complementary elements are anticipated to be consistent with Industrial Zone Development Standards, as described in the SAP Implementing Zoning Regulations (Placer County 2019b). These standards specify setbacks from the property line ranging from 15 to 50 feet and a maximum height of 100 feet. Towers, poles, water tanks, and similar structures may be constructed higher than 100 feet.

This EIR describes complementary elements for each Plan Concept. Although the activities associated with the complementary elements are the same for each Plan Concept, locations within the WPWMA facility are not.

Plan Concept 1 generally locates the 1.9 million square feet of complementary elements on the northern and southern extents of the western property, with some activities on the center property. For purposes of this EIR, up to 300,000 square feet of building associated with the complementary elements plus associated outdoor infrastructure are considered at a project level. For purposes of analysis, these industrial uses are assumed to be located on the northern portion of the western property (Figure 3-1).

Plan Concept 2 generally locates the 1.9 million square feet of complementary elements on the eastern property and the southern extent of the western property, with some activities on the center property. For purposes of this EIR, up to 300,000 square feet of building associated with the complementary elements plus associated outdoor infrastructure are considered at a project level. For purposes of analysis, these industrial uses are assumed to be located on the northern portion of the eastern property (Figure 3-7).

Table 4-5 provides an overview of the complementary and programmatic elements that are evaluated at a project level versus a programmatic level in this EIR.

Table 4-5. Project and Program-Level Evaluation of Complementary and Programmatic Elements in EIR

	Project Level	Program Level
Plan Concept 1	300,000 square feet of building plus exterior infrastructure for complementary solid waste management elements Located on the northern portion of the western property Assumed to be built within 10 years	Up to 1.6 million square feet of industrial uses that are complementary to the solid waste management elements Primarily on the northern and southern extents of the western property, plus locations on the center property Full build-out through 2050
Plan Concept 2	300,000 square feet of building plus exterior infrastructure for complementary solid waste management elements Located on the northern portion of the eastern property Assumed to be built within 10 years	Up to 1.6 million square feet of industrial uses that are complementary to the solid waste management elements Primarily on the eastern property, plus locations on the center property and southern portion of the western property Full build-out through 2050

The detailed project-level evaluation provided in this DEIR includes all the solid waste management elements and supporting elements associated with the proposed project, plus 300,000 square feet of building for complementary elements. The analysis of the potential environmental impacts resulting from these project elements are described in detail in each of the resource area chapters, Chapters 5 through 17.

This DEIR also includes evaluation of the remainder of the complementary and programmatic elements (1.6 million square feet) that would be potentially developed on the WPWMA property by the WPWMA or by third parties. The analysis of the potential environmental impacts resulting from these project elements is provided at a programmatic level in each of the resource chapters, Chapters 5 through 17.

4.5 Additional Baseline Information

The CEQA guidelines (CCR Section 15125[a]) state that:

> An EIR must include a description of the physical environmental conditions in the vicinity of the project. This environmental setting will normally constitute the baseline physical conditions by which a lead agency determines whether an impact is significant. The purpose of this requirement is to give the public and decision makers the most accurate and understandable picture practically possible of the project's likely near-term and long-term impacts.
>
> (1) Generally, the lead agency should describe physical environmental conditions as they exist at the time the notice of preparation is published, or if no notice of preparation is published, at the time environmental analysis is commenced, from both a local and regional perspective. Where existing conditions change or fluctuate over time, and where necessary to provide the most accurate picture practically possible of the project's impacts, a lead agency may define existing conditions by referencing historic conditions, or conditions expected when the project becomes operational, or both, that are supported with substantial evidence. In addition, a lead agency may also use baselines consisting of

> both existing conditions and projected future conditions that are supported by reliable projections based on substantial evidence in the record.
>
> (2) A lead agency may use projected future conditions (beyond the date of project operations) baseline as the sole baseline for analysis only if it demonstrates with substantial evidence that use of existing conditions would be either misleading or without informative value to decision-makers and the public.

The WPWMA issued a Notice of Preparation (NOP) for the project on March 15, 2019, and initiated preparation of the CEQA environmental review process. For purposes of this analysis, the baseline conditions for this DEIR are generally the conditions that existed on the three WPWMA-owned properties in 2019. For solid waste operations that fluctuate on a daily basis and to represent a full year of data, the baseline is based on averages from calendar year 2018, unless otherwise specified.

Because the center property is currently actively used for waste management, Chapter 1, Introduction, provides a robust description of those extensive ongoing waste recovery and waste disposal activities. Additionally, Chapters 5 through 17 of this DEIR present the existing environmental conditions on the project site and surrounding area, in accordance with the CEQA Guidelines (CCR Section 15125). This setting generally serves as the baseline against which environmental impacts are evaluated.

The WPWMA used conservative assumptions in this DEIR when evaluating the proposed project's impacts against the existing baseline conditions in order to fully disclose to the public the possible adverse environmental impacts that could occur with changes in site operations. However, while it is important to document these potential adverse environmental impacts, it is also important to acknowledge that by achieving the project's fundamental goal of fostering the development of local markets, the project itself would be expected to generate specific environmental benefits when compared with current operations. This approach of fostering the development of local markets is intended to spur environmentally focused innovation, increase the diversion of recyclable materials and the delivery of these materials to local markets, reduce overall vehicle miles traveled, and reduce the air quality and greenhouse gas (GHG) emissions associated with delivering these materials to distant domestic and foreign markets. Other examples where environmental impacts associated with ongoing operations would be avoided with project implementation include the following:

- With existing operations, insufficient facility capacity to accept and process materials from the Participating Agencies could force one or more of the agencies to transport their wastes to other facilities. Inevitably, this would result in increased heavy-duty truck traffic to and from these alternative facilities over an extended period of time. This action would not only result in increased vehicle miles traveled but also increased GHG emissions and other air quality impacts associated with the combustion of diesel and other fossil fuels.
- If the organics management area capacity is not increased, there is the potential for a greater amount of organic materials received at the WPWMA facility to be landfilled. Although the LFG collection system would recover a significant portion of this additional LFG, some of the LFG (consisting of approximately equal parts CO_2 and CH_4) would be released to the atmosphere and result in increased GHG emissions. Furthermore, without modifying the organics management area to fully implement aerated static pile methods, compost-related odors would likely increase over time with regulatory pressures to compost food waste and other non-green waste organics.
- Unless space is dedicated to site and foster new and emerging technologies to increase the diversion of materials from landfilling and buffer the WPWMA from the instability of global recycling market fluctuations, increases in air and GHG emissions as well as increases in vehicle miles traveled would be

realized as a result of the need to continue or expand the long-distance transport of recyclable commodities to both domestic and foreign markets.

There are three areas where the existing condition for the proposed project differs from the 2019 baseline described in Chapter 1, as described in the following sections.

4.5.1 Organics Management

As part of continuously improving operations at the facility, the WPWMA pursued upgrades to the organics management operation subsequent to the NOP. Specifically, the WPWMA conducted a pilot study to evaluate composting combined green and food waste using an aerated static pile (ASP) composting method, as ASP composting generally provides for faster turnaround time for finished compost, less labor, and less odor.

Table 4-6 describes the 2019 environmental baseline, activities that occurred between the NOP and present, and the current operating condition for the organics management operation.

Table 4-6. Organics Management Operation Baseline and Current Condition

2019 Baseline	Between 2019 Baseline and Existing Condition	Current Operating Condition
Composting green waste using open windrows (60,606 tons per year) Windrow piles watered periodically using a water truck and turned using a diesel-powered windrow turner or loader	Pilot study to evaluate co-composting of green and food waste using an ASP composting method ASP piles initially wetted; piles typically not turned during active composting	The WPWMA has obtained permits from the Placer County Air Pollution Control District to perform ASP composting for the entire organics management operation (82,000 tons per year), but will retain approval to use windrow composting for the non-food portion of the feedstock

Following completion of the active composting process (windrow and ASP), the material is moved to static piles and allowed to cure, screened (using a diesel-powered trommel screening device located within the compost pad area), and then marketed for sale and removed from the site. All the composting activities occur outdoors.

4.5.2 Site-Wide Odor Plan

The baseline discussion in Chapter 1, Introduction, describes a variety of mechanisms used by the WPWMA to control odors at the site at the time the NOP was released. These included an Odor Impact Minimization Plan (OIMP) for the organics management facility as well as additional BMPs.

At the time of the NOP, the WPWMA used an OIMP that was last updated in 2016. In addition to the OIMP, the WPWMA implemented additional best management practices (BMPs) for the organics management operation, plus odor BMPs for the MRF building, the C&D operation, and the Western Regional Sanitary Landfill (WRSL) to reduce the potential for odors to be perceived by nearby residents. This EIR assumes the use of the 2016 OIMP plus additional odor-control BMPs as the baseline condition against which potential odor impacts of the proposed project are evaluated.

Subsequent to the NOP, the 2016 version of the OIMP was updated in 2020 and implemented for the organics management operation. The OIMP describes potential sources of odor and the odor control measures that are currently being implemented at the WPWMA's organics management operation. As part

of the documents prepared to support Placer County Air Pollution Control District permitting of ASP composting, the WPWMA updated the OIMP for use in 2021 and beyond.

In 2021, the WPWMA began full implementation of a Site-Wide Odor Plan (SWOP), developed in coordination with the Placer County Air Pollution Control District, to provide information about facility odor sources, meteorological conditions that have the potential to exacerbate the perception of odors, and the measures the WPWMA takes to reduce the potential for facility odors to be perceived by nearby residents. The SWOP is used as a tool by the WPWMA and its facility operators and contractors to consistently and proactively take the appropriate steps to reduce the potential for offsite odors. The SWOP establishes the BMPs used to mitigate the release of odors from WPWMA facilities. The SWOP includes measures to prevent, monitor, and address odors. BMPs reflect current operating and regulatory conditions; changes in regulations or programs operated by the Participating Agencies may necessitate revisions to the SWOP.

The SWOP identifies four facilities or operations at the WPWMA facility with the greatest potential to produce odors: MRF building, composting operation, active landfill areas, and landfill gas collection and control system. Specific odor control measures from the SWOP for each of these operations are included in their respective discussion in Chapter 3, Project Description. The SWOP is included in Appendix C.6.

4.5.3 Landfill Gas Generation

Total LFG generation associated with the 2018 Baseline was estimated by using the EPA's LFG generation model (LandGEM), with appropriate input values based on actual annual waste placement and estimated waste composition data through 2018. Future LFG generation associated with the proposed project was estimated by using projected future waste placement rates and assuming that the composition of the waste stream would change during the project timeframe, consistent with Senate Bill (SB) 1383 organics diversion requirements. The incremental increase in LFG generation between the 2018 Baseline and project buildout year of 2050 (when maximum operational capacity is expected) was analyzed as part of the proposed project for each Plan Concept.

4.6 MRF Operations Design Concept Evaluation

The WPWMA is currently undergoing a competitive procurement process for the future near-term (approximately 10-year) operations of the waste recovery and waste disposal operations. The WPWMA developed RFPs for these operations in May 2020. As part of that process, the WPWMA received proposals for operations of the waste recovery operations (termed MRF operations for the RFP) and for waste disposal operations (termed landfill operations for the RFP). The WPWMA's procurement process is ongoing as of the writing of this DEIR.

An independent review of the vendor proposals for MRF operations was conducted following the WPWMA's Board authorization at the February 11, 2021, WPWMA Board meeting. The independent review entailed a high-level review of the operation conceptual designs to assist the WPWMA with determining what, if any, proposed elements are not currently fully addressed in the two plan concepts. The RFP addresses only a subset of the overall Waste Action Plan timeframe, approximately 10 years. Responses received indicate that operational changes proposed fall within the umbrella of impacts evaluated in the EIR for the Waste Action Plan, and that there would be no change in the total quantity of wastes received at the facility and no change in the waste stream composition. The vendor proposals include potential changes to the management of organics contained within the municipal solid waste (MSW) stream (MSW organics composting) and the diversion rates that are proposed to result from additional organics processing. The responses indicate that the rate for organics and recyclables to be diverted from MSW

would be accelerated compared to the proposed project. This accelerated diversion rate may result in a nominal increase in traffic during the 10-year operating agreement as materials diverted from the waste stream are recovered and taken offsite. However, this increase in the near-term traffic would be less than the maximum trips associated with full buildout of the Waste Action Plan and evaluated in this EIR. Other proposed activities included in the vendor proposals that differ from currently proposed operations are believed to fall within the range of the project components described for Plan Concepts 1 and 2 and are not specifically identified or addressed. Additionally, where these proposed activities diverge from those described in Chapter 3, they are assumed to fall within the programmatic approach for compatible manufacturing or pilot study areas.

Features of the potential differences between the proposals received during the MRF RFP process and the proposed project evaluated in this EIR are summarized as follows:

- Generally, the organics management operation described in the proposals accommodates a total of 157,550 tons per year of organics (92,450 tons per year of food waste plus the organics fraction of MSW and 65,100 tons per year of yard waste), located on the center property. This capacity is comparable to the full build-out capacity as the organics management operation in Plan Concept 1 and Plan Concept 2 (157,900 tons per year by 2050) but occurs in a shorter timeframe. Locating an organics management operation on the center property is consistent with Plan Concept 2.
- To accommodate the quantity of material processed at the organics management facility, the facility would need to be built sooner than anticipated in Plan Concept 1 and Plan Concept 2. However, the total capacity of the bidders' facility is within the total capacity (full build-out in 2050) of Plan Concept 1 and Plan Concept 2 and evaluated in this EIR.
- In addition to processing green waste and food waste, the organic fraction of municipal solid waste (OFMSW) in the organics management feedstock would be pulled out of the mixed MSW (non-source separated) sorted inside the MRF building.
- Recovering the OFMSW would increase diversion rates and decrease the amount of material going to disposal at the WRSL. The proposals include an overall diversion rate of 55 to 60 percent during the 10-year timeline of the proposals, whereas Plan Concepts 1 and 2 have an estimated overall diversion rate of 50 percent or greater by 2050. A portion of the increased diversion is due to the additional organics diversion and a portion is from additional diversion of recyclables.
- The technology proposed for processing includes a combination of ASP and covered ASP (CASP). Some form of CASP would be used to process the food waste and OFMSW. One of the proposals uses a biolayer (similar to the proposed project) cover, and one uses a membrane cover. The aeration systems in the proposals for the food waste and OFMSW is either positive or reverse flow. The two proposals use a biolayer cover on the ASP piles that are processing yard waste. ASP is used for curing all organics feedstocks rather than static piles.
- Due to the increased organics diversion, a receiving and processing building for yard waste could be developed.

The EIR evaluates a full buildout of the Waste Action Plan, which is envisioned to have a 30-year life. The MRF Operations Procurement Process would potentially result in a 10-year operating agreement. In all cases, the quantities of waste identified for processing at the WPWMA facility under the MRF RFP process are within the quantities evaluated for the life of the Waste Action Plan, the impacts of which have been evaluated in detail in this EIR.

The MRF RFP process responses would result in the diversion of material from Waste Disposal to Waste Recovery, in the form of composting as part of the organics management operation and additional recyclables. Diversion of the OFMSW and other recyclables would potentially result in the following:

- Smaller landfill footprint over the life of the project, as a result of more material being diverted from waste disposal;
- Processing of more compost in the short term, corresponding to the diversion of OFMSW from the waste stream;
- Reduction in landfill gas production, which corresponds to the diversion of OFMSW from disposal;
- The expanded use of ASP would have a corresponding increase in energy use in the near-term, in the form of electricity used for blowers; and
- Increased amounts of recyclables recovered from the MRF would be anticipated to result in a near-term increase in outbound traffic taking material to market and provide greater opportunities for compatible manufacturing.

After reviewing selective portions of the MRF RFP bidder responses and comparing them to the project description, changes to the following chapters were not found to be necessary because the changes associated with the MRF RFP responses do not deviate meaningfully from the solid waste management elements already envisioned in the EIR for Plan Concepts 1 and 2 and evaluated for potential impacts:

- Aesthetics, Chapter 5
- Biological Resources, Chapter 7
- Cultural and Tribal Resources, Chapter 8
- Geology, Soils, and Paleontological Resources, Chapter 9
- Hazards, Hazardous Materials and Wildfire, Chapter 11
- Land Use and Planning, Chapter 13
- Noise, Chapter 14
- Public Services, Chapter 15

Table 4-7 identifies chapters where the changes associated with MRF Operations RFP responses may result in slightly different/slightly fewer impacts than those described in the EIR, but not worthy of a discussion in the chapter.

Table 4-7. RFP Responses Relative to Proposed Project

Resource Area	Change that the MRF Operations Procurement Process Responses Represents Relative to Proposed Project
Hydrology and Water Quality (Chapter 12)	Changes associated with the MRF Operations Procurement Process responses associated with hydrology and water quality would result from diverting OFMSW from the WRSL to be processed via CASP composting methods. This change would potentially result in a smaller overall landfill footprint, which would reduce the risk of liner breach and groundwater contamination. As a result, the MRF Operations Procurement Process responses would potentially result in fewer impacts related to hydrology and water quality; potential impacts are within the impacts evaluated for Plan Concepts 1 and 2. No additional analysis for hydrology and water quality is required.
Transportation (Chapter 16)	Changes associated with the MRF Operations Procurement Process responses would primarily correspond to onsite traffic flows resulting from the diversion of OFMSW from the WRSL to the organics management facility. There may also be a nominal increase in traffic during the 10-year operating agreement as materials diverted from the waste

Table 4-7. RFP Responses Relative to Proposed Project

Resource Area	Change that the MRF Operations Procurement Process Responses Represents Relative to Proposed Project
	stream are recovered and taken offsite. However, this increase in the near-term traffic would be less than the maximum trips associated with full buildout of the Waste Action Plan and evaluated in this EIR. Consequently, no additional analysis for transportation and traffic is required.
Utilities and Energy (Chapter 17)	By shifting more of the waste stream to the organics management facility in the near term, the expanded use of ASP would have a corresponding increase in energy use in the near-term, in the form of electricity used for blowers. However, the throughput of material in the organics management facility during the 10-year operating agreement of the MRF RFP Operations Procurement is less than the total throughput envisioned for either Plan Concept 1 or Plan Concept 2 during the life of the Waste Action Plan and evaluated in this EIR. Accordingly, changes associated with the MRF Operations Procurement Process responses are already envisioned in the EIR for the proposed project, and no additional analysis for utilities and energy is required.

Table 4-8 identifies chapters where the changes associated with MRF Operations RFP responses may result in slightly more substantiative changes than those described in the EIR. These changes do not necessarily result in a higher level of potential impact, but a qualitative discussion has been included in their respective resource chapter.

Table 4-8. RFP Responses Addressed in Resource Chapters

Resource Area	Change that the MRF Operations Procurement Process Responses Represents Relative to Proposed Project
Air Quality (Chapter 6)	Changes associated with the MRF Operations Procurement Process responses are expected to result in a change in air emissions and potential for odor generation resulting from the diversion of OFMSW from the WRSL and subsequently processed via CASP composting methods. The organic fraction of MSW has the potential to increase odors and would require additional controls and measures. CASP composting systems include covers on the composting piles, which reduce odor and greenhouse gas emissions. Changes are also anticipated related to the addition of an enclosed odor-controlled building for organics processing. Chapter 6, Air Quality, provides a qualitative discussion related to these changes.
Greenhouse Gas Emissions and Climate Change (Chapter 10)	The changes associated with the MRF Operations Procurement Process responses have the potential to change greenhouse gas emissions for the proposed project in the following ways: ▪ Processing organics under physical covers is expected to decrease greenhouse gas emissions. ▪ Expanded CASP will result in a short-term increased use of electricity and corresponding increase in greenhouse gas emissions. ▪ Processing more material in the compost area and less in the landfill will result in a decrease in the quantity of methane generated in the landfill (and potentially emitted, primarily through surface emissions). Chapter 10, Greenhouse Gas Emissions and Climate Change, provides additional analysis related to the changes described above.

5. Aesthetics

This chapter describes visual resources near the proposed project and evaluates potential impacts the proposed project may have on the landscape's aesthetic character. This chapter analyzes whether Plan Concept 1 or Plan Concept 2 of the Renewable Placer: Waste Action Plan would alter the environment's perceived visual character and cause visual impacts.

5.1 Environmental Setting

Visual resources are generally defined as the landscape's viewable natural and built features. Landforms, water, and vegetation patterns are among the natural landscape features that define an area's visual character, whereas buildings, roads, and other structures reflect human modifications to the landscape. These natural and built landscape features are considered visual resources that contribute to the public's experience and appreciation of the environment.

5.1.1 Regional Setting

The project site is located on the eastern edge of the Sacramento Valley in western Placer County (Figure 1-1) between the cities of Roseville and Lincoln. Parts of the areas north and west of the project area are generally characterized by open land containing grazing, field crops, and other agricultural uses. A small residential area is located two miles west of the Western Placer Waste Management Authority's (WPWMA's) center property; there is another residential area 2 miles northeast of the project site in the City of Lincoln. To the east, development in the City of Rocklin includes residences, commercial uses, and a university, among which are open, undeveloped grassy areas. The city of Roseville, located south of the project, is dominated by residential development, with residences located 1 mile from WPWMA's southern property line. The foothills and mountains of the Sierra Nevada are visible east of the project area, although they are not dominant features because of distance and atmospheric haze. The Sutter Buttes are visible northwest of the project area but, like the Sierra Nevada, are not a dominant feature because of distance and atmospheric haze. On a clear day, the Coast Ranges are visible approximately 40 miles to the west of the project site (Placer County 2019a).

Areas surrounding the WPWMA site are characterized by relatively flat terrain with natural grasslands and agricultural uses, such as field crops and grazing. Development is mostly rural, with pockets of urbanized land developed primarily for industrial uses. The lack of tall vegetation and buildings allows viewers in the area to see parts of the cities of Rocklin and Lincoln in the middle ground, with views of the foothills in the background, although small changes in elevation or the presence of buildings, tall bushes, or trees can obscure long-range views from viewpoints throughout the area. Thunder Valley Casino Resort and the WPWMA's Western Regional Sanitary Landfill (WRSL) are the two most prominent visual features in the area, although their prominence depends on the viewer's distance from these facilities. From nearby vantage points, particularly from Fiddyment Road and Athens Avenue, the WRSL appears as a low hill that is seasonally vegetated. A power transmission line transects the area northwest to southeast, and the large transmission line towers are visible from most of the area. Lower-voltage power lines are located adjacent to some roads in the area. The area's visual character is largely agricultural and rural, with some developed commercial and industrial areas (Placer County 2019a).

Views in the area are generally considered to be low to moderate in quality. The area has low vividness because it lacks distinctive scenic resources, and there are no distinguishable topographic, geologic, or other natural features. Facilities such as the WRSL and the nearby Athens Industrial Area (which includes the CEMEX Lincoln cement plant, the PC Exploration company, several wood recycling operations, and the

A&A Concrete Supply operation) generally have low visual order in the landscape, and intrusions are not in visual harmony with the landscape. In these areas, there is low unity and low intactness. Other areas such as agricultural areas with agriculture-related development, as well as business park areas, have some visual order and have intrusions consistent with the landscape. In these areas, there is moderate unity and moderate intactness (Placer County 2019a).

5.1.2 Project Area

The site is located on the WPWMA's three existing properties, generally at the intersection of Athens Avenue and Fiddyment Road, as described in Section 1.2 and shown on Figure 1-2. The three contiguous properties total 928 acres (Figure 1-3) and are described as follows:

- Approximately 155-acre eastern property, which is undeveloped and leased by WPWMA to a private entity for cattle grazing.
- Approximately 314-acre center property, which includes the existing Material Recovery Facility (MRF) building, composting facility, construction and demolition (C&D) materials processing area, public waste drop-off area, household hazardous waste (HHW) facilities, WRSL, stormwater ponds, scalehouse facilities, landfill gas (LFG)-to-energy plant, the site entrance infrastructure, and a Pacific Gas & Electric Company (PG&E) transmission line easement.
- Approximately 459-acre western property, part of which is currently leased to the City of Lincoln for discharge of reclaimed water and part of which is leased for model airplane operations. A sublessee of the City of Lincoln resides on this property in a single-story residential structure located at the end of the dirt road that extends directly west from the intersection of Athens Avenue and Fiddyment Road. The same PG&E transmission line easement that extends along the southwestern corner of the center property extends through the south-central portion of this property.

Within the project site, land is generally flat with pre-landfill-development elevations ranging from approximately 100 feet above mean sea level (msl) in the south to 135 feet above msl in the center of the site. The existing landfill rises to a peak elevation of 196 feet above msl.

5.2 Regulatory Setting

Federal, state, and local regulations were reviewed for applicability to the proposed project.

5.2.1 Federal

There are no applicable federal plans or laws related to aesthetics and relevant to the proposed project.

5.2.2 State

California Environmental Quality Act (CEQA) of 1970, as amended.

CEQA generally requires state and local government agencies to inform decision makers and the public about the potential environmental impacts of proposed projects, including impacts to visual resources, and to reduce those environmental impacts to the extent feasible.

***Streets and Highways Code*, Article 2.5 State Scenic Highways.**

In 1963, the California Legislature created the Scenic Highway Program to protect scenic highway corridors from changes that would diminish the aesthetic value of lands adjacent to highways. The state

regulations and guidelines governing the Scenic Highway Program are found in the *Streets and Highways Code*, section 260 et seq. A highway may be designated as "scenic" depending on how much of the natural landscape can be seen by travelers, the landscape's scenic quality, and the extent to which development intrudes upon the travelers' enjoyment of the view.

There are no officially designated State Scenic Highways located within the proposed project viewshed (Caltrans 2019).

5.2.3 Local

The WPWMA is a Joint Powers Authority (JPA) composed of Placer County and the cities of Lincoln, Rocklin, and Roseville to own and operate a regional recycling facility and sanitary landfill. As a JPA, the WPWMA considers local regulations and consults with local agencies, but County and city regulations are not applicable, as the County and cities do not have jurisdiction over the proposed project. Accordingly, the following discussion of local goals and policies associated with visual resources is provided for informational purposes only.

Placer County General Plan

The relevant goals and policies from the Placer County General Plan applicable to visual resources within the proposed project area are presented in this section.

> Goal 1.K: To protect the visual and scenic resources of Placer County as important quality-of-life amenities for County residents and a principal asset in the promotion of recreation and tourism.
>
> - Policy 1.K.3: The County shall require that new development in rural areas incorporates landscaping that provides a transition between the vegetation in developed areas and adjacent open space or undeveloped areas.
>
> Goal 1.O: To promote and enhance the quality and aesthetics of development in Placer County.
>
> - Policy 1.O.1: Except as otherwise provided in the Design Guidelines of an approved Specific Plan, the County shall require all new development to be designed in compliance with applicable provisions of the Placer County Design Guides Manual.
> - Policy 1.O.9: The County shall discourage the use of outdoor lighting that shines unnecessarily onto adjacent properties or into the night sky.

Placer County Design Guidelines

Placer County has adopted design guidelines, and procedures are established under the County Zoning Ordinance for performing design review. The County's design guidelines are applicable to all commercial, industrial, and multifamily development and identify principles related to a building's height, bulk, color, and scale. Other subjects covered include architectural design, site planning, parking and circulation, and signs. Specific site planning and design criteria are included for commercial, industrial, and multifamily development.

Placer County Landscape Design Guidelines

Placer County also maintains landscape design guidelines (Placer County 2013) applicable to the design review process. The landscape design guidelines contain a series of "general requirements" for

landscaping, including preserving existing trees and shrubs where feasible; a 15 percent site coverage landscape requirement; requirements for landscape design and scale consistency; requirements for water-efficient landscaping; standards for planting area sizes; a requirement for landscaping along property borders; screening to minimize light, noise, and physical distractions; use of deciduous trees in parking lot interiors; screening parking, loading, and other similar areas; and a requirement for comprehensive master landscape plans for major developments. Other guidelines pertaining to planting size, installation, maintenance, and irrigation are also described in the guidelines manual.

Sunset Area Plan

The proposed project is located within an area covered by the Sunset Area Plan (SAP) (Placer County 2019b). The relevant goals and policies from the SAP applicable to visual resources are presented in this section.

Goal LU/ED-3: Design and Land Development Practices. To promote high-quality design and land development practices in the Sunset Area.

- Policy LU/ED-3.7: Screening to Avoid Visual Impacts. The County shall require outdoor storage or activity areas to incorporate screening elements to reduce the visual impact of such activities. Such elements shall include opaque fencing and landscaping. The stacking of materials in outdoor yard areas shall be restricted to reduce visual impacts. No materials stored immediately adjacent to screening elements should exceed the height of the screen. Materials stored higher than a screen shall be confined to the middle of the yard area.
- Policy LU/ED-3.9: Lighting. The County shall balance the need for lighting in new developments with concern for the environment and existing uses by encouraging the use of efficient, strategic, and aesthetic lighting methods that address public safety and reduce light pollution. Lighting design should adhere to the following principles:
  - A. Lighting on site should be designed to promote pedestrian comfort and safety and to enliven public gathering places.
  - B. Lighting for individual buildings should be integrated into the architecture.
  - C. Lighting shall be designed to minimize projection into adjacent properties and onto adjacent roads and not provide a source of glare.
  - D. The height of light standards in parking areas shall not exceed eighteen (18) feet.
  - E. Energy-efficient technology should be used wherever possible.

5.3 Impact Analysis and Mitigation Measures

5.3.1 Thresholds of Significance

The thresholds of significance for assessing impacts come from the CEQA Environmental Checklist. For aesthetics, the CEQA Checklist asks, except as provided in *Public Resources Code* Section 21099, would the project

- Have a substantial adverse effect on a scenic vista?
- Substantially damage scenic resources, including trees, rock outcroppings, and historic buildings within a state scenic highway?

- In nonurbanized areas, substantially degrade the existing visual character or quality of public views of the site and its surroundings? (Public views are those that are experienced from publicly accessible vantage points). If the project is in an urbanized area, would the project conflict with applicable zoning and other regulations governing scenic quality?
- Create a new source of substantial light or glare that would adversely affect day or nighttime views in the area?
- The proposed project vicinity does not include designated scenic vistas or scenic resources, including trees, rock outcroppings, or historic buildings within a state scenic highway. Therefore, these CEQA Checklist questions are not discussed further in this chapter.

5.3.2 Analysis Procedure

This analysis of the visual resource issues associated with the proposed project was prepared in accordance with the visual impact assessment system developed by the Federal Highway Administration (FHWA) in *Visual Impact Assessment for Highway Projects* (2015). FHWA invested considerable resources in developing and implementing this method. As a result, it is robust and widely used to provide systematic evaluations of visual change.

The FHWA method addresses the following primary questions:

- What are the visual qualities and characteristics of the existing landscape in the project area?
- What are the potential effects of the project's proposed alternatives on the area's visual quality and aesthetics?
- Who would see the project, and what is their likely level of concern about, or reaction to, the way the project visually fits within the existing landscape?

Applying the FHWA method entails the following six steps:

- Establish the project's area of visual influence.
- Determine who has views of and from the project (the viewer).
- Describe and assess the landscape that exists before project construction (the affected environment).
- Assess the response of viewers looking at and from the project, before and after project construction (viewer sensitivity or concern).
- Determine and evaluate views of the project for before and after project construction (simulations).
- Describe the potential visible changes to the project area and its surroundings that would result from the project.

The initial step in the evaluation process was to review planning documents applicable to the project area to gain insight into the type of land uses intended for the general area and the guidelines given for the protection or preservation of visual resources. Consideration was then given to the existing visual setting within the project viewshed, which is defined as the geographical area in which the project can be seen. Site reconnaissance was conducted to view the site and surrounding area, identify potential key observation points (KOPs), and take representative photographs of existing visual conditions. The photographs used as the basis for preparing the simulations were taken with a single-lens reflex digital camera set to take photographs with a focal length equivalent to that of photographs taken with a

35-millimeter (mm) camera with a 50mm lens (view angle 40 degrees). Photographs from the site reconnaissance were selected to represent the "before" conditions from each of the potential KOPs. Within the viewshed area, five KOPs were selected to be used as the basis for analyzing the proposed project's visual effects. The existing visual conditions seen in the views from each of the KOPs were evaluated by using the FHWA visual quality assessment system that entails use of a numerical rating system.

The FHWA visual quality assessment asks: Is this particular view common or dramatic? Is it a pleasing composition (a mix of elements that seem to belong together) or not (a mix of elements that either do not belong together or contrast with the other elements in the surroundings)?

Under the FHWA visual quality analysis system, the visual quality of each view is evaluated in terms of its vividness, intactness, and unity:

- Vividness is defined as the degree of drama, memorability, or distinctiveness of the landscape components. Overall vividness is an aggregated assessment of landform, vegetation, water features, and human-made components in views.
- Intactness is a measure of the visual integrity of the natural and human-built landscape and its freedom from encroaching elements. This factor can be present in well-kept urban and rural landscapes, as well as in natural settings. High intactness means that the landscape is free of unattractive features and is not broken up by features and elements that appear out of place. Low intactness means that visual elements that are unattractive or detract from the quality of the view can be seen.
- Unity is the degree of visual coherence and compositional harmony of the landscape considered as a whole. High unity frequently attests to the careful design of individual components and their relationship in the landscape or refers to an undisturbed natural landscape.

Each of these visual quality dimensions is documented by using an FHWA rating sheet. For each dimension, a numerical rating score on a scale from 1 to 7 is assigned, where a score of 1 indicates very low visual quality, a score of 4 indicates moderate or average visual quality, and a score of 7 indicates very high visual quality. The scores for each of the three dimensions are added and then averaged to generate an overall visual quality score.

The views from each of the five viewpoints selected as KOPs for this analysis are described, and the results of the FHWA-based evaluation of their visual quality are documented in Section 5.3.3.

To provide a basis for evaluating the project's impacts on these views, visual simulations were produced to illustrate the "after" visual conditions from each KOP. Computer modeling and rendering techniques were used to produce simulated images of the site views as they will appear after the proposed project is developed. Existing topographic and site data provided the basis for developing an initial digital model. Engineers provided engineering drawings, digital data, and landfill height information for the proposed project. The data were used to create three-dimensional digital models, which were then combined with the digital site model to produce a complete computer model of the proposed project. These simulations provide the viewer with a clear image of the location, scale, and visual appearance of the proposed project. The images are accurate within the constraints of the available site and project data.

Based on review of the simulated project views from each KOP, the visual quality of each view was reevaluated, using the FHWA visual quality evaluative system. Results of the evaluations of the existing and project views from each KOP are documented on the FHWA worksheets that are attached as Appendix B. The evaluations of the existing and project views were compared to determine the degree of

visual change. Based on assessing the degree of visual change that the proposed project's development will bring and evaluating the sensitivity of the view, the overall visual impact was determined and expressed in terms of impact level (very low to very high).

Once all effects were examined, a determination was made as to whether any potential impacts would reach a level that would be significant under the four CEQA Guidelines checklist questions discussed in Section 5.3.7.

5.3.3 Key Observation Points

To structure the analysis of the proposed project's effects on visual resources, the project's viewshed was defined. The viewshed is the area surrounding a project from which the project is or could be visible to viewers based on topography, vegetation, and the built environment. Based on the area's generally flat terrain and the expanded landfill's proposed maximum height, it was assumed that topography would not fully screen the landfill from view from any location within a 4-mile study area. Vegetation and built-environment features that could screen the project from view would be assessed during field reconnaissance.

Locations within the 4-mile study area that could be the most sensitive to the proposed project's potential visual impacts were identified prior to the site visit. Locations used as KOPs for previous WPWMA environmental documents and for the SAP Environmental Impact Report (EIR) were also identified and considered. Existing visual conditions were photo-documented from potential sensitive receptor locations throughout the study area during site visits conducted on October 1, 2019, and November 1, 2019. Views from the inventory of viewpoints captured within the study area were reviewed, and five were selected as KOPs to be used for evaluating the proposed project's visual effects. Figure 5-1 shows each KOP location relative to the project site.

Based on the observations made in the field and review of photographs, the existing visual conditions of the views from each of the five KOPs were documented and evaluated. Assessments of existing visual conditions were made by applying the approach to landscape evaluation that is part of the methodology for visual impact assessment developed by the FHWA as described in Section 5.3.2. The baseline existing conditions seen in the views from each of the five KOPs are described in the following subsections.

KOP 1

KOP 1 is located near the Sun City Lincoln Hills Community Center. Sun City Lincoln Hills is a planned 55+ residential development of more than 6,000 homes. Figure 5-2 is a photograph of the existing view looking southwest toward the proposed project site, which is approximately 4 miles away.

Taken from a slightly elevated location on a slope, the photograph shows the manicured grounds of a golf course in the immediate foreground, dotted with the occasional large pine or oak tree and sand trap. Generously sized homes with red- and brown-tile roofs are located adjacent to the golf course and are part of the Sun City Lincoln Hills development. Large portions of the middle ground are screened from view by intervening trees and residences. What is visible consists of additional residential development and tan-colored open space. Thunder Valley Casino Resort's 17-story tower and large parking structure are seen at center left. The existing landfill is difficult to distinguish, but it is visible to the right of the casino. Mountains that form the western border of the Central Valley are located approximately 40 miles from KOP 1 and are faintly visible in the background.

The golf course and adjacent residential development—the dominant visual elements—are attractive and meticulously maintained. Though heavily influenced by human development, the view's intactness

remains high, with the casino tower and parking garage presenting as minor encroaching elements. Unity is also high, as the view is a generally satisfying blend of natural and human-built visual elements. Overall visual quality of the view from KOP 1 is moderately high.

The project area is only partially visible from KOP 1 because of intervening buildings and large trees. Viewers would be Lincoln Hills residents, guests, and community center staff. The golf course and community center are heavily trafficked facilities within the community, and view duration may range from minutes to several hours. However, viewers may tend to be more focused on their activities than on the views beyond the property. Overall viewer exposure from KOP 1 is moderately low.

Overall visual sensitivity from KOP 1 is moderate based on the moderately high visual quality of the view and a moderately low degree of exposure in an area where viewer concern is assumed to be moderate.

KOP 2

KOP 2 is located off Twelve Bridges Drive near the State Route 65 southbound highway exit. From this southwest-facing view, the project area is located 2 miles in the distance. See Figure 5-3 for a photograph of the existing condition.

An open field of ochre-colored dried grasses and shrubs extends out from the viewpoint. Large oak and eucalyptus trees are scattered throughout the scene, generally along roadsides and as screening for industrial land uses in the vicinity. The north-south aligned Industrial Avenue crosses the image from left to right. An electrical distribution line and a railroad track that parallel Industrial Avenue are also visible in the foreground. In the middle ground, the Thunder Valley Casino Resort tower and parking structure dominate the left-hand side of the view. The existing landfill surface is visible in the center of the image, though it is partially screened by existing vegetation. At this distance, the landfill is a somewhat natural-appearing topographic feature. A mountain range approximately 40 miles away is faintly seen on the right-hand side of the photograph.

Save for the distant mountains in the background, the view lacks distinctive or memorable components that would increase visual quality. The casino tower and parking deck are the view's most vivid features, though they represent intrusive elements that contrast with a scene that is otherwise dominated by open space. Overall visual quality from KOP 2 is moderately low.

Project site visibility from this KOP is high, though intervening large trees may provide a low level of screening. Aside from Twelve Bridges Drive and State Route 65, the KOP is surrounded by open space, so viewers would be limited to persons traveling through the area by vehicle. As such, viewing times would be brief, likely no more than 1 to 2 minutes. Overall viewer exposure from KOP 2 is moderate.

Overall visual sensitivity from KOP 2 is moderate based on the moderately low visual quality of the view and a moderate degree of exposure in an area where viewer concern is assumed to be moderate.

KOP 3

Located south of Athens Avenue and across the street from the main entrance to the Thunder Valley Casino Resort, KOP 3 faces west toward the project site. The existing condition view is presented on Figure 5-4. While the casino is a heavily trafficked local attraction, the surrounding area is largely undeveloped open space. Several industrial-use facilities are located south and west of the casino along Industrial Avenue and Athens Avenue.

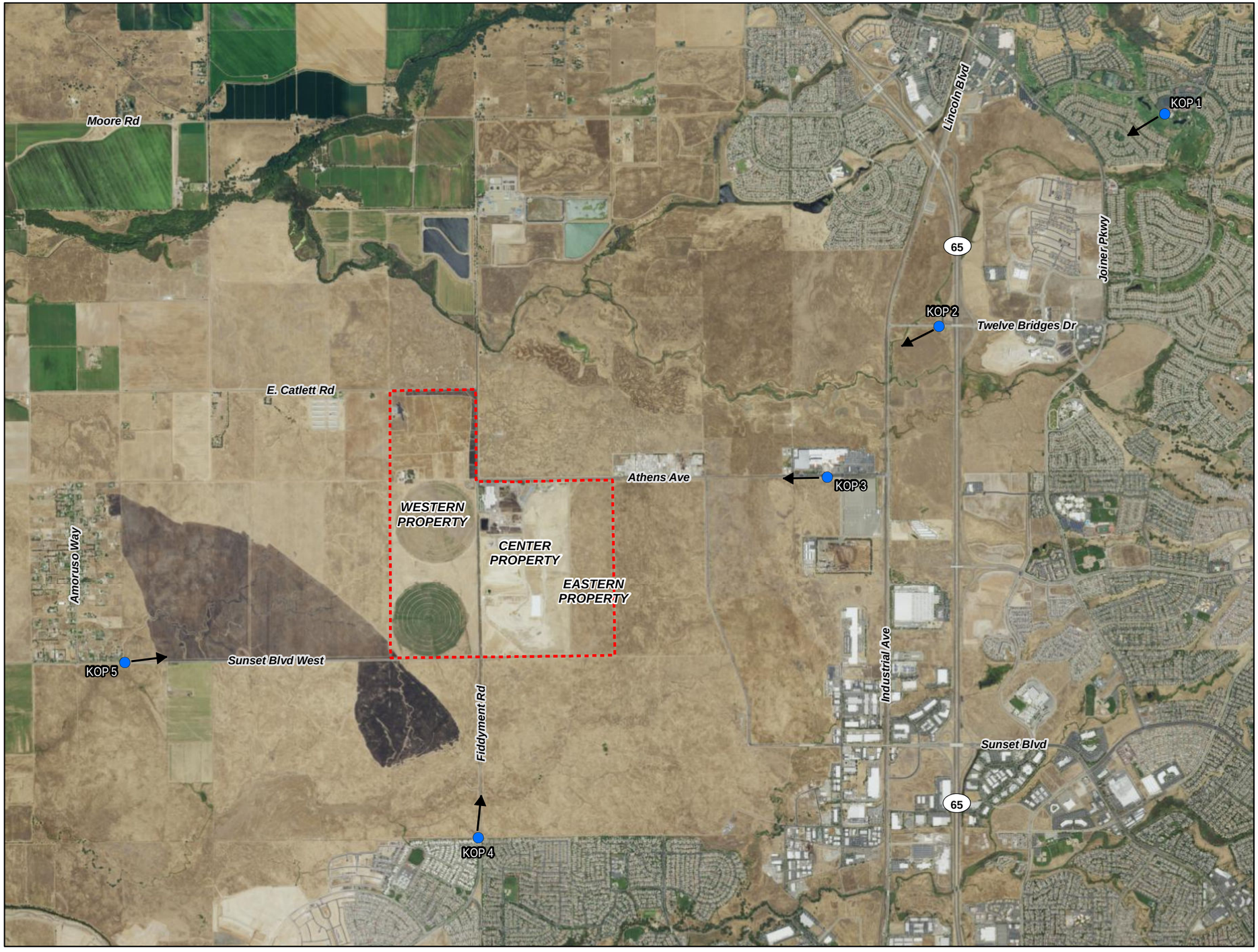

VICINITY MAP

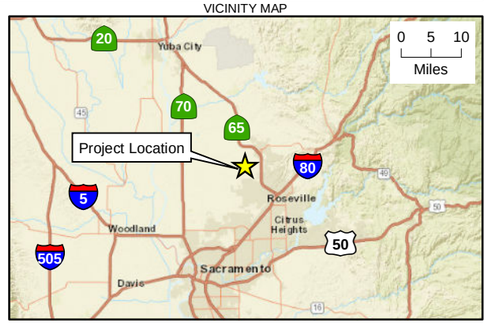

LEGEND

- Project Boundary
- Key Observation Point (KOP) and Photograph Direction

N

0 0.5 1
Miles

Figure 5-1. Key Observation Points
Draft Environmental Impact Report
Renewable Placer: Waste Action Plan
Placer County, California

Jacobs

KOP 1 – Existing view from near the Sun City Lincoln Hills Community Center looking southwest toward the landfill.

Figure 5-2. KOP 1 – Existing Condition
Draft Environmental Impact Report
Renewable Placer: Waste Action Plan
Placer County, California

KOP 2 – Existing view from Twelve Bridges Drive looking southwest toward the landfill.

Figure 5-3. KOP 2 – Existing Condition
Draft Environmental Impact Report
Renewable Placer: Waste Action Plan
Placer County, California

KOP 3 – Existing view from Athens Avenue looking west toward the landfill.

Figure 5-4. KOP 3 – Existing Condition
Draft Environmental Impact Report
Renewable Placer: Waste Action Plan
Placer County, California

Two different and contrasting landscapes are documented in KOP 3. On the left-hand side of the image, south of Athens Avenue, flat, open fields of dried grasses and shrubs give way to the subtle rise of the existing landfill 1.5 miles from the viewpoint. Between the KOP and the project site, a row of wood distribution poles traverses the view from left to right. Farther in the distance, beyond the project site, a large electrical transmission line is visible. Though influenced by human development, the landscape appears natural. On the right-hand side of the image, along Athens Avenue and to the north, human development dominates. The casino, with its large parking structure, tall hotel tower, and attractively landscaped grounds, sharply contrasts with the open space across the street. An electrical distribution line running along the southern side of Athens Avenue neatly divides the scene and is an additional intrusive element. Lacking memorable landscape elements and with moderately low levels of intactness and unity, overall visual quality at KOP 3 is low to moderately low.

Current project site visibility from the area near KOP 3 is high. Land in the area is generally flat and open with no vegetation or trees of significant size to provide screening. Viewers would be a mix of persons visiting or working at the casino, staff of nearby industrial facilities, and drivers using Athens Avenue. Among these viewer groups, visitors to the casino would have a moderate level of visual concern, while others would have a low to moderate level of concern. View duration would generally be short, limited to a few minutes for travelers driving along Athens Avenue or for visitors entering and exiting the casino.

Overall visual sensitivity from KOP 3 is moderate based on the moderately low visual quality of the view and a high degree of exposure in an area where viewer concern is assumed to be moderate.

KOP 4

KOP 4 is a view from west of Fiddyment Road looking north toward the project site, which is located 1 mile from the viewpoint. Areas immediately south of the project site are characterized by open space. Beyond 1 mile south, open space transitions to newer single-family residential development. Figure 5-5 documents the existing visual conditions at KOP 4.

Green- to brown-colored riparian grasses and shrubs of moderate height are visible in the immediate foreground of the view. Fiddyment Road and an adjacent row of wooden utility poles divide the areas beyond into east and west, though the landscape on both sides of the road is defined by flat, open space. Existing vegetation consists mostly of dried grasses and shrubs; however, there are a limited number of larger trees in view. An electrical transmission line supported by lattice steel structures is seen crossing the photograph from left to right. On the right-hand side of the image, the existing landfill mound rises slightly above the otherwise flat terrain. The existing landfill base is marked by a row of pine trees that were planted along the property's southern boundary to provide visual screening.

Scenic resources visible from KOP 4 are limited to distant foothills and mountains, the nearest of which are approximately 10 miles to the east. Though somewhat natural appearing, the view from KOP 4 is influenced by human development and contains intrusive elements such as the utility poles and road signage. Overall visual quality of the view is average.

Existing landfill visibility is high, as there are few natural or human-made elements to provide visual screening. From the distance of KOP 4, the row of tall pine trees planted for this purpose does little to obscure the existing landfill from view. Viewers would consist of two main groups, the first being drivers traveling through the area along Fiddyment Road. Their views of the landfill would be short, lasting no longer than a few minutes, and their level of visual concern would be moderate. The second viewer group would consist of persons viewing the area from their nearby residences. In general, views would be limited to residences that are adjacent to the open space south of the project site. Residences not bordering the

KOP 4 – Existing view from Fiddyment Road looking north toward the landfill.

Figure 5-5. KOP 4 – Existing Condition
Draft Environmental Impact Report
Renewable Placer: Waste Action Plan
Placer County, California

open space would likely have any views toward the landfill screened by other residences. Residential viewers tend to have a higher level of visual concern and experience longer viewing durations.

Overall visual sensitivity from KOP 4 is moderate based on the average visual quality of the view and a high degree of exposure in an area where viewer concern is assumed to be moderate.

KOP 5

Figure 5-6 presents the east-facing view from KOP 5, which is located along Sunset Boulevard West, 2 miles west of the project site near a small community of residential development along Amoruso Way. Aside from this pocket of low-density residential, land uses to the west of the project site are either agricultural or open space.

The smooth asphalt surface of Sunset Boulevard West travels out from the viewpoint along the right-hand side of the image and is paralleled by a row of wooden utility poles. To the north of the road, a vast, generally flat open space extends out toward the foothills of the Sierra Nevada mountain range, which begin to rise approximately 10 miles in the distance. The existing landfill mound is seen to the left of Sunset Boulevard West, but it is difficult to detect because of its distance, relatively low profile, and the coloring of its slopes, which matches the surrounding open space. The landfill base is marked by a row of pine trees that were planted along Fiddyment Road to provide visual screening. The teal-colored MRF building is visible toward the center of the view.

Intactness and unity are average to moderately high, as the scene is a natural-appearing view of open fields with foothills rising in the distance. Both are somewhat degraded by the visible human-made elements. Vividness is enhanced by the presence of the distant foothills, but the view otherwise lacks memorable features. Overall visual quality is average.

Existing landfill visibility is high, as there are few natural or human-made elements to provide visual screening. From the distance of KOP 5, the row of tall pine trees planted for this purpose does little to obscure the landfill from view. Viewers in the area of KOP 5 would be like those described for KOP 4, consisting of motorists using Sunset Boulevard West and residents of the community off Amoruso Way.

Overall visual sensitivity from KOP 5 is moderate, based on the average visual quality of the view and a high degree of exposure in an area where viewer concern is assumed to be moderate.

KOP 5 – Existing view from Sunset Boulevard West looking northeast toward the landfill.

Figure 5-6. KOP 5 – Existing Condition
Draft Environmental Impact Report
Renewable Placer: Waste Action Plan
Placer County, California

Jacobs

5.3.4 Character Photographs

Figures 5-7 through 5-15 present character photographs that provide additional context for the proposed project setting.

Figure 5-7. Character Photograph 1
View looking southwest from a park at the Sun City Lincoln Hills Community Center. Large trees on the property screen the landfill from view.

Figure 5-8. Character Photograph 2

View looking southwest from a residential subdivision under construction 2.5 miles northeast of the project site. The existing landfill is visible in the center of the photograph, to the right of the Thunder Valley Resort Casino.

Figure 5-9. Character Photograph 3
View looking southwest from Dr. Nathan Dubin Neighborhood Park, located 2.0 miles from the project site. The existing landfill is visible on the left-hand side of the image, while the large, teal-roofed MRF building and other landfill support facilities are seen toward the center.

Figure 5-10. Character Photograph 4
View looking southeast from near the intersection of Moore Road and S. Dowd Road, roughly 2.0 miles from the project site. Dense vegetation and tall trees growing along a creek screen views of the project site from this point and other areas to the north.

Figure 5-11. Character Photograph 5
View looking south-southwest from Moore Road, 2.0 miles north of the project site. The existing landfill is visible on the center left side of the image. The structure in the foreground screens the view toward the MRF building and other landfill support facilities.

Figure 5-12. Character Photograph 6
View looking southeast from the northwestern corner of the western WPWMA property. A facility used for model airplane operation is seen to the right, while the existing landfill and support facilities are visible in the center and to the left.

Figure 5-13. Character Photograph 7
View looking north from Fiddyment Road on the western side of the project site. Existing trees planted along the eastern side of Fiddyment Road effectively screen the landfill from view.

Figure 5-14. Character Photograph 8
View looking northwest from Fiddyment Road across the western WPWMA property. The open field in view is currently leased to the City of Lincoln for discharge of reclaimed water.

Figure 5-15. Character Photograph 9
View looking east-northeast from the intersection of Sunset Boulevard West and Amoruso Way. Dense vegetation and tall trees within the nearby residential community screen the landfill from view.

5.3.5 Project Appearance

The WPWMA has identified two separate concepts for implementing the Waste Action Plan, both of which are evaluated at an equal level of detail in the following assessment of visual effects. Plan Concept 1 and Plan Concept 2 contain similar elements, but the locations and characteristics of the elements vary between the two. Table 5-1 summarizes proposed project elements associated with each Plan Concept that may affect visual resources. Refer to Chapter 3, Project Description, for detailed information about all proposed project elements. Plan Concept 1 and Plan Concept 2 layout maps are provided as Figure 3-1 and Figure 3-7, respectively.

Table 5-1. Summary of Landscape Changes Associated with Plan Concept 1 and Plan Concept 2

Waste Action Plan Project Element	Environmental Baseline	Plan Concept 1 Change	Plan Concept 2 Change
Waste Recovery			
Expanded and Redesigned Organics Management Operation	Organics management operation located in the northern part of the center property using windrows	Expanded organics management relocated to the center part of the western property using ASP	Expanded organics management operation within the northern part of the center property using ASP; Requires relocation of waste in Modules 1, 2, 10, and 11
	Two compost leachate collection ponds on center property	50% increase in overall pond capacity and removal of pond on center property	50% increase in overall pond capacity and removal of pond on center property
	Compostable materials received outside	Potential construction of a food waste receiving building	Potential construction of a food waste receiving building
Expanded and Redesigned C&D Materials Processing Operation	C&D materials processing located in the northern part of the center property	C&D materials processing operation increased in size by 2 to 3 times on the center property	C&D materials processing operation increased in size by 2 to 3 times on the center property and integrated with expanded composting operation and redesigned public waste drop-off; requires relocation of waste in Modules 1, 2, 10, and 11
Expanded and Redesigned Public Waste Drop-Off Area Operations	Public waste drop-off area operations (tipping area, buy-back center, HHW) located in the northern part of the center property	Public waste drop-off area operations expanded, redesigned and relocated to western property; new facilities include a public tipping area, material buy-back center, an HHW drop-off area, a reuse store, and an entrance kiosk with vehicle queuing	Expanded and redesigned public waste drop-off operations on the center property; new facilities include public tipping area, a material buy-back center, an HHW drop-off area, and a reuse store; requires relocation of waste in Modules 1, 2, 10, and 11
Waste Disposal			
Expanded Landfill Disposal Capacity	Waste footprint located on center property in one contiguous landfill footprint	Waste footprint expanded to eastern property in one contiguous landfill footprint	Waste footprint expanded to western property with landfill footprints on both the center property and western property
	Current elevation – 196 feet above msl and permitted peak elevation – 295 feet above msl	Height increase above current conditions – 129 feet; Height increase	Height increase above current conditions – 129 feet; Height increase above

Table 5-1. Summary of Landscape Changes Associated with Plan Concept 1 and Plan Concept 2

Waste Action Plan Project Element	Environmental Baseline	Plan Concept 1 Change	Plan Concept 2 Change
		above currently permitted conditions – 30 feet	currently permitted conditions – 30 feet
	Permitted waste footprint – 231 acres	Waste footprint expands by 89 acres to 320 acres	Waste footprint expands by 131 acres to 362 acres
	Waste capacity exhausted by approximately 2058	Estimated increase in landfill site life by approximately 43 years	Estimated increase in landfill site life by approximately 52 years
	Eventual relocation of Waste Recovery operations on currently permitted Module 9 to allow for future landfill disposal	Elimination of currently permitted Module 9 for future Waste Disposal	Elimination of currently permitted Modules 8 and 9 for future Waste Disposal
Excavation of Existing Solid Waste	Waste previously placed in non-Subtitle D lined modules (Modules 1, 2, 10, 11)	Modules 1, 2, 10, and 11 would be excavated, and the contents relocated to an onsite Subtitle D-compliant module; Excavated modules would be lined and reused for future Waste Disposal when needed	Modules 1, 2, 10, and 11 would be excavated, and the contents relocated to an onsite Subtitle D-compliant module; A portion of Module 11 would be lined and reused for future Waste Disposal, and the remaining excavated module areas would be backfilled with clean soil within 3 years to accommodate expansion of solid waste activities on the center property
	Peak elevations of Modules 1, 2, 10, and 11 do not exceed approximately 170 feet above msl	The peak elevation of Modules 1, 2, 10, and 11 would be approximately 325 feet above msl	A portion of Module 11 would be relined and incorporated into the remaining waste cells, which would be approximately 325 feet above msl. Modules 1, 2, 10, and part of 11 would be filled with clean soil to match the surrounding ground elevation
Landfill Environmental Monitoring and Control Systems	Leachate, surface water, and LFG management systems	The leachate, surface water, and LFG management systems would be expanded to accommodate the expanded landfill footprint and height	The leachate, surface water, and LFG management systems would be expanded to accommodate the expanded landfill footprint and height and duplicated for the landfill expansion on the western property

Table 5-1. Summary of Landscape Changes Associated with Plan Concept 1 and Plan Concept 2

Waste Action Plan Project Element	Environmental Baseline	Plan Concept 1 Change	Plan Concept 2 Change
Complementary and Programmatic Elements			
Complementary and Programmatic Elements	Grazing operations on the eastern property, solid waste operations on the center property, and irrigation and model airplane operations on the western property	Project Level – Development of up to 300,000 square feet of building plus exterior infrastructure for complementary solid waste management elements. Industrial uses may include compatible technologies, pilot study areas, university research areas, and an LFG to compressed natural gas area Program Level – Up to 1.6 million square feet of industrial uses that are complementary to the solid waste management elements	Project Level – Development of up to 300,000 square feet of industrial uses Program Level – Development of up to 1.6 million square feet of industrial uses
		Project Level – Located on the northern part of the western property Program Level – Primarily in the northern and southern parts of the western property, plus locations on the center property, although some uses may be developed in closer proximity to the solid waste project elements or within areas not yet developed with solid waste project elements	Project Level – Located on the northern part of the eastern property Program Level – Primarily on the eastern property, plus locations on the center property and southern part of the western property, although some uses may be developed in closer proximity to the solid waste project elements or within areas not yet developed with solid waste project elements
Supporting Elements			
Waste Recovery and Waste Disposal – Supporting Elements	Materials recovered from the MRF operations are stored either within or outside of the MRF building, depending on material type and space constraints	Construction of a new recovered materials storage building and increased ability to store recovered materials inside	Construction of a new recovered materials storage building and increased ability to store recovered materials inside
	Stormwater ponds on center property	New and expanded stormwater ponds on western, center, and eastern properties	New and expanded stormwater ponds on western and center properties

Table 5-1. Summary of Landscape Changes Associated with Plan Concept 1 and Plan Concept 2

Waste Action Plan Project Element	Environmental Baseline	Plan Concept 1 Change	Plan Concept 2 Change
	Road crossings between center and western property limited to public roads	Separated facility-only crossing of Fiddyment Road that would connect center and western properties	Separated facility-only crossing of Fiddyment Road that would connect center and western properties
	Maintenance facility on the center property	Center property maintenance facility would be upgraded, and a new satellite maintenance facility would be constructed on the western property (for compost and public waste drop-off operations)	Center property maintenance facility would be upgraded, and a new satellite maintenance facility would be constructed on the western property (for landfill operations)
	Administration building on the center property	Expansion to, or addition of, a second administration building with an education center and parking	Expansion to, or addition of, a second administration building with education center and parking
	Entrance facilities on Athens Avenue	Upgraded Athens Avenue entrance facilities, including site access and scalehouse infrastructure when needed	Upgraded Athens Avenue entrance facilities, including site access and scalehouse infrastructure
	Restricted dirt road access to western property at the Fiddyment Road and Athens Avenue intersection	New paved site entrance to western property at the Fiddyment Road and Athens Avenue intersection to accommodate public access to the western property	New paved site entrance to western property at the Fiddyment Road and Athens Avenue intersection to accommodate expanded landfill operation
	Wastewater and fire protection water line used for the existing public waste drop-off area operations	A new wastewater and new fire protection water line extending to the western property would be necessary to service the relocated public waste drop-off area operations	A new wastewater and fire protection water line extending to the western property would be necessary to service the expanded landfill operations
	Landscaping and fencing located along parts of the center property	Expanded perimeter landscaping and fencing to surround entire project site	Expanded perimeter landscaping and fencing to surround entire project site

Effects Common to the Plan Concepts

Lighting.

The WPWMA uses portable lights at the landfill working face and along the access road from the MRF. Portable lights generally consist of two-wheeled trailers that include 30-foot extendable masts with four 1,000-watt parallel metal halide lamps. The lamps are powered by a diesel engine included on the trailer. The lights include shielding to minimize light scatter off the project site. Two to four portable trailer lights are used for the site, depending upon the distance of the landfill tipping (unloading) area to the landfill working face. Lighting is only used during the fall, winter, and spring when darkness occurs before 8:30 p.m. (WPWMA 2017).

Only a moderate increase in the overall level of lighting is expected for continued and expanded landfill operation, because the new landfill areas would be phased and the active filling in each area at any one time would be restricted to a relatively small part of the larger area. However, as the landfill increases in height, the active working face will be at higher elevations; thus, the working face and associated night lighting have the potential to be more visible. Additionally, as new landfill areas are developed (on the eastern property for Plan Concept 1 and the western property for Plan Concept 2), night lighting will be introduced in areas where no lighting currently exists.

Relocating the organics management operation and public waste drop-off area to the western property for Plan Concept 1 will introduce lighting to the western property. This lighting would be the minimum required for site security and would be consistent with Placer County General Plan and SAP policies that lighting be screened and not shine unnecessarily onto adjacent properties or into the night sky, and that light pollution be minimized.

Similarly, introducing programmatic and complementary manufacturing elements to the western and eastern properties will introduce new sources of lighting that do not currently exist. It is assumed that any such developments will include lighting that is screened and minimized, consistent with Placer County General Plan Policies, General Plan Design Guidelines, General Plan Landscape Design Guidelines, and SAP Policies.

WRSL Cover.

No change to disposal and cover procedures are expected to occur as a result of the proposed project. Current practices involve minimizing the work area over which waste is spread to control odor and litter. Additionally, the waste is covered at least daily with a layer of compacted soil or alternative daily cover.

Currently, the WPWMA continuously revegetates portions of the WRSL that have been disturbed for erosion control and water quality. This practice of continuous revegetation results in landfill slopes that resemble the surrounding landscape, as shown on Figure 5-5, the existing condition of the site from KOP 4. WPWMA would continue the practice of continuous revegetation for the proposed project.

Site Beautification and Perimeter Fencing.

Site beautification for the proposed project includes landscaping or vegetation, and irrigation at the new administrative building, main entrance, and site perimeter as well as fencing along the perimeter of the site. Plan Concepts 1 and 2 include 1,000 and 500 square feet of landscaping or vegetation for the new administrative building and main entrance, respectively. The plan concepts include varying lengths of irrigation, perimeter vegetation, and fencing, depending on the facility configuration.

Existing perimeter fencing would be maintained to the extent feasible. Under Plan Concept 1, new fencing would be used to enclose the composting facility on the western property and the landfill on the eastern property. For Plan Concept 2, new fencing would be needed to enclose the landfill on the western property. In all cases, a 6-foot-high chain-link fence or comparable would be used.

Litter.

Litter control measures are based on the wind conditions for the day and season. Normally, portable litter control fences are placed in the immediate vicinity of the landfill working face to contain windblown litter. If necessary, additional fences are placed adjacent to the landfill working face. When necessary, a work crew polices the litter fences near the landfill working face, the site itself, access roads and adjacent properties, as necessary. The WPWMA's MRF and WRSL operators are responsible for removing litter blown offsite to surrounding properties, as agreed to by adjacent landowner(s). At the end of each operating day, or more frequently on high-wind days, the working area is patrolled for litter. Litter is removed from the daily-cover stockpile, areas between the landfill working face and the litter fences, and vehicle unloading area. Litter in the areas around the vehicle unloading area and any push trails to the landfill working face are also picked up before the end of the day (WPWMA 2017). Litter control efforts at the WPWMA facility would continue for the proposed project and expand as needed with increasing levels of waste received at the site.

Litter is also generated by vehicles hauling waste en route to the facility. As the proposed project would extend the life of the WPWMA's facility and increase waste quantities being transported to the site, the potential for litter to be generated along haul routes is expected to continue.

Complementary and Programmatic Elements.

Both Plan Concept 1 and Plan Concept 2 reserve space for future complementary and programmatic elements to be developed by third parties. As described in Chapter 3, Project Description, uses may include compatible technologies and manufacturing operations, a pilot study area, a university research area, and an LFG-to-compressed natural gas, hydrogen or other renewable fuels area; all activities that would use materials from the facility to generate beneficial products.

Associated developments are expected to be consistent with the WPWMA property's Eco-Industrial zoning and land use designation with regard to type of use, scale, and appearance. Complementary and programmatic elements will generally be consistent with Industrial Zone Development Standards, as described in the Sunset Area Implementing Zoning Regulations (Placer County 2019b). These standards specify setbacks from the property line, ranging from 15 to 50 feet and a maximum height of 100 feet. Towers, poles, water tanks, and similar structures may be constructed higher than 100 feet.

Representative photographs of the types of facilities that may be considered as part of the complementary and programmatic elements are shown on Figures 5-16 through 5-18.

Of the 1.9 million square feet of industrial uses that could be developed on the WPWMA facility during the life of the proposed project, 300,000 square feet are considered at a project level in this analysis, while the remaining 1.6 million square feet are considered at a program level (see Chapter 4, Approach, for additional information). For Plan Concept 1, the 300,000 square feet of industrial use are assumed to be located on the northern part of the western property, while these uses for Plan Concept 2 would be located on the northern part of the eastern property.

Figure 5-16. Representative Complementary and Programmatic Element – Biogas Plant
Source: iStock

Figure 5-17. Representative Complementary and Programmatic Element – Biomass Facility
Source: iStock

Figure 5-18. Representative Complementary and Programmatic Element – Warehouse
Source: iStock

5.3.6 Visual Effects Assessment

As previously noted, the systematic evaluation of visual effects from Plan Concept 1 and Plan Concept 2 was conducted by using FHWA worksheets, which are attached as Appendix B and provide more complete details regarding the comparison between existing and simulated views,[16] as summarized in the following subsections.

Plan Concept 1

Simulated views of the developments proposed in Plan Concept 1 are presented on Figures 5-19 through 5-23. Two simulations are provided for each KOP location: one showing the project in the year 2050 and one showing the project at Full Buildout (estimated at year 2101).

[16] Proposed project features shown in the simulated views include the final grading plan for the WRSL at year 2050 and at Final Buildout, and the organics management operation on the western property for Plan Concept 1. These project components were identified as those project-level components most likely to be visible from offsite locations and therefore affect the visual character and quality of the project vicinity. Future complementary and programmatic elements for which facility designs and final locations are not currently specified were not included in the simulations.

a. KOP 1 – Simulated view of Plan Concept 1 2050, as seen from near the Sun City Lincoln Hills Community Center.

b. KOP 1 – Simulated view of Plan Concept 1 Full Buildout, as seen from near the Sun City Lincoln Hills Community Center.

Simulations are artistic renderings of what the project features are expected to look like following implementation of the Proposed Project.

Figure 5-19. KOP 1 – Plan Concept 1
Draft Environmental Impact Report
Renewable Placer: Waste Action Plan
Placer County, California

a. KOP 2 – Simulated view of Plan Concept 1 2050, as seen from Twelve Bridges Drive.

b. KOP 2 – Simulated view of Plan Concept 1 Full Buildout, as seen from Twelve Bridges Drive.

Simulations are artistic renderings of what the project features are expected to look like following implementation of the Proposed Project.

Figure 5-20. KOP 2 – Plan Concept 1
Draft Environmental Impact Report
Renewable Placer: Waste Action Plan
Placer County, California

a. KOP 3 – Simulated view of Plan Concept 1 2050, as seen from Athens Avenue.

b. KOP 3 – Simulated view of Plan Concept 1 Full Buildout, as seen from Athens Avenue.

Simulations are artistic renderings of what the project features are expected to look like following implementation of the Proposed Project.

Figure 5-21. KOP 3 – Plan Concept 1
Draft Environmental Impact Report
Renewable Placer: Waste Action Plan
Placer County, California

a. KOP 4 – Simulated view of Plan Concept 1 2050, as seen from Fiddyment Road.

b. KOP 4 – Simulated view of Plan Concept 1 Full Buildout, as seen from Twelve Bridges Drive.

Simulations are artistic renderings of what the project features are expected to look like following implementation of the Proposed Project.

Figure 5-22. KOP 4 – Plan Concept 1
Draft Environmental Impact Report
Renewable Placer: Waste Action Plan
Placer County, California

a. KOP 5 – Simulated view of Plan Concept 1 2050, as seen from Sunset Boulevard West.

b. KOP 5 – Simulated view of Plan Concept 1 Full Buildout, as seen from Sunset Boulevard West.

Simulations are artistic renderings of what the project features are expected to look like following implementation of the Proposed Project.

Figure 5-23. KOP 5 – Plan Concept 1
Draft Environmental Impact Report
Renewable Placer: Waste Action Plan
Placer County, California

KOP 1.

As seen in the simulated views, the expanded landfill mound would be partially visible in 2050 and increasingly visible at Full Buildout. However, given the distance of the landfill from KOP 1 (approximately 4 miles) and the screening effects of tall trees in the view, overall visual character and quality would be only slightly reduced from current conditions.

In addition to the expanded landfill mound, other proposed project elements may be visible from KOP 1, but these elements are relatively small in size and scale when viewed from a 4-mile distance and would not contribute to a reduction in quality of view.

KOP 2.

The expanded landfill mound would be clearly visible, though partially screened by intervening vegetation, when viewed from KOP 2. The height of the landfill would be similar in 2050 compared with Full Buildout; however, by 2101, the mound will have expanded its footprint farther north and will appear to be approximately twice the size. Other proposed project elements would likely be screened from view by existing trees or the expanded landfill mound.

Existing overall visual character and quality at KOP 2 was rated as moderately low and would be reduced by implementing Plan Concept 1 but would remain moderately low. While the Thunder Valley Resort Casino's 17-story tower currently dominates the view, the expanded landfill would create a second visual focus, particularly by Full Buildout. The view's intactness would decrease because of the presence of a larger intrusive element. Though only faintly visible on a clear day, the landfill would partially obscure views toward the distant Coastal Ranges to the west.

Viewers in the KOP 2 area are generally commuters traveling in vehicles and would tend to have short viewing times and lower levels of concern, limiting the impact of the reduction to visual character and quality.

KOP 3.

The view from KOP 3 looks out over an open field that offers no vegetative screening, resulting in high visibility of the landfill. Under Plan Concept 1, the proposed expanded landfill mound would initially rise in the south and then grow toward the north. At Full Buildout, the mound would appear to be the same height but approximately twice as large as it would in 2050. The landfill's form would contrast with the otherwise flat and open terrain in the area. However, the dirt or naturally vegetated surface of the landfill may blend with the surrounding fields of dried grasses and shrubs.

Overall visual quality at KOP 3 is currently low because of a lack of vivid landscape features and the presence of visually intrusive elements such as the casino parking structure and row of utility poles that parallels Athens Avenue. Even at Full Buildout of the project, the casino facility tends to dominate the view and draw more viewer attention than the landfill. Still, the expanded landfill would be an additional human-built feature that contrasts with the rural and agricultural character of the area and contributes to a reduction in visual quality. Other proposed project elements would likely be screened from view by the existing and expanded landfill mound.

Viewers from this location would be a mix of persons visiting or working at the casino, staff of nearby industrial facilities, and drivers using Athens Avenue. Commuters traveling in vehicles would tend to have short viewing times and lower levels of concern. Casino staff and visitors would generally be spending their time within the complex and would not be focused on views toward the landfill. Similarly, the

attention of staff of nearby industrial developments would typically be on activities within a facility and not the views beyond. With generally lower levels of viewer concern at KOP 3, the extent of the impact to visual resources would be limited.

KOP 4.

The landfill is highly visible from KOP 4, which looks out from a residential community south of the landfill over flat open space. As expansion of the landfill would begin in the south and then grow toward the north, there are few noticeable differences between the simulation of Plan Concept 1 2050 and Full Buildout. In other words, growth of the landfill after 2050 would generally be screened from view. Other proposed project elements on the center property would also be screened from view by the landfill mound from KOP 4. Development proposed on the western property may be visible from this location and would result in additional visual impacts, particularly in the case of elements that would be taller than the perimeter fence and landscaping.

Overall visual quality of the view is currently moderate and reflects the area's rural and agricultural character. The existing landfill is visible but relatively natural appearing and does not dominate the view. By 2050, the landfill will be both considerably taller and wider, greatly increasing the visibility of an intrusive element. The landfill would come to be the visual focus of the view and screen the Sierra Nevada foothills currently visible to the north and northeast. Additionally, proposed complementary and programmatic development on the western property may be visible after 2050. These changes would result in a drop in visual quality, from moderate to moderately low.

Residential viewers tend to have high sensitivity to visual changes because they spend more time in the area and are accustomed to the existing views. With a notable drop in visual quality in an area with sensitive viewer groups, changes to the visual landscape that result from implementing Plan Concept 1 may be significant.

KOP 5.

The landfill mound to be expanded under Plan Concept 1 would be highly visible from KOP 5. The existing landfill is visible but not particularly noticeable. Facing east toward the Sierra Nevada foothills, the low rise of the landfill fits with the natural topography of the view. The coloring of the landfill slopes blends with the surrounding area's open spaces. However, by 2050, the landfill will have increased in height and become much more noticeable compared with current conditions. At Full Buildout, the mound will be a dominant feature of the view and obscure views of the distant foothills. These changes would result in a drop in visual quality, from moderate to moderately low.

Plan Concept 1 includes a proposal to expand the organics management facility and relocate it to the center portion of the western property. This proposed facility is depicted in the 2050 and Full Buildout simulations; however, given the 1.75-mile distance from KOP 5 and the facility's low profile, visibility is low, and impacts to visual quality would be slight. Other project elements proposed on the center and western property may also be visible from KOP 5 and would result in additional visual impacts, particularly in the case of elements that would be taller than the perimeter fence and landscaping.

KOP 5 is located near a small residential community at the intersection of Amoruso Way and Sunset Boulevard West. Residential viewers tend to have high sensitivity to visual changes because they spend more time in the area and are accustomed to the existing views. With a notable drop in visual quality in an area with sensitive viewer groups, changes to the visual landscape that result from implementing Plan Concept 1 may be significant.

Plan Concept 2

Simulated views of the developments proposed in Plan Concept 2 are presented on Figures 5-24 through 5-28. Two simulations are provided for each KOP location: one showing the project in the year 2050 and one showing the project at Full Buildout (estimated to be year 2110).

KOP 1.

The visibility and visual effect of proposed elements under Plan Concept 2 would be similar to Plan Concept 1 as viewed from KOP 1. In 2050, the expanded landfill mound would be partially visible. A second landfill mound proposed for the western property would be fully screened by intervening vegetation seen in the center right-hand side of the view. By Full Buildout, both landfill mounds would be increasingly visible but would remain largely screened. Overall visual character and quality would be only slightly reduced from current conditions.

In addition to the expanded landfill mound, other proposed project elements may be visible from KOP 1, but these elements are relatively small in size and scale when viewed from a 4-mile distance and would not contribute to a reduction in the quality of the view.

KOP 2.

The visibility and visual effect of proposed elements under Plan Concept 2 would be slightly increased compared with Plan Concept 1 as viewed from KOP 2. The second landfill footprint proposed under Plan Concept 2 is visible to the west of the existing expanded mound. Both footprints would continue to be expanded north, and by Full Buildout, they would stretch to cover much of the view from the casino tower to the right-hand side of the image. Intervening vegetation would partially screen the landfill and other proposed project elements.

The presence of a second landfill mound may make it more likely that a viewer's attention would be drawn to the project. Though terrain near the landfill is generally flat, there are occasional topographic features in the area, particularly to the east toward the Sierra Nevada foothills. This makes it possible that a casual observer viewing the site from a distance may mistake the landfill for a naturally occurring hill. A second spatially distinct but visually similar landform would likely make it clear that these landscape features are human-built, which may negatively affect an observer's experience of the view.

Existing overall visual character and quality at KOP 2 was rated as moderately low. Visual character and quality would be reduced with implementation of Plan Concept 2 but would remain moderately low.

KOP 3.

The visibility and visual effect of proposed elements under Plan Concept 2 would be very similar to Plan Concept 1 as viewed from KOP 3. The second landfill footprint proposed for the western property under this Plan Concept would be visible in both 2050 and at Full Buildout, but it is located farther from the KOP, so it appears smaller than the landfill footprint that would be expanded onto the eastern property. Similar to KOP 2, the presence of two landfill mounds as repeating elements in the landscape draw attention to the presence of these human-built features. By 2110, the two landfill mounds would stretch from north of Athens Avenue to the left-hand side of the view and would contribute to a reduction of the overall visual quality of KOP 3.

Plan Concept 2 would use the eastern property for complementary and programmatic elements, which may be visible from this location and would result in additional visual impacts, particularly in the case of elements that would be taller than the perimeter fence and landscaping.

KOP 4.

Visual impacts resulting from implementation of Plan Concept 2 would be similar to those of Plan Concept 1 at KOP 4. Under this Plan Concept, the existing landfill footprint would not be expanded onto the eastern property. As a result, the expanded landfill would still screen northeast-facing views of the Sierra Nevada foothills but to a lesser degree than under Plan Concept 1. A second landfill mound would be constructed on the WPWMA's western property, to the west of Fiddyment Road, visible in the simulations on the left-hand side. At Full Buildout, the eastern mound would appear to be slightly larger than in 2050, whereas the western mound would be moderately larger. Other project elements proposed on the center property would be screened from view by the landfill mound from KOP 4. Development of the complementary and programmatic elements proposed on the western and eastern properties may be visible from this location and would result in additional visual impacts, particularly in the case of elements that would be taller than the perimeter fence and landscaping.

Visual character and quality at KOP 4 would be reduced from moderate to moderately low with implementation of Plan Concept 2. In an area with sensitive residential viewers, this change may be significant.

KOP 5.

Plan Concept 2 would construct a second landfill mound on the western property of the WPWMA site. This new footprint would be located approximately 0.5-mile closer to KOP 5 than the mound on the center property. Though the two mounds would reach the same maximum height, a closer mound on the western property would appear to be larger from the vantage point of KOP 5, which is directly west of the landfill.

By 2050, the mound on the western property is clearly visible in the center of the view, while the expanded mound on the center property is seen on the right-hand side. At Full Buildout, the two mounds will be large enough to dominate the view and screen most of the Sierra Nevada foothills that are currently visible when facing east from KOP 5. As such, implementation of Plan Concept 2 would result in increased visual impacts compared with Plan Concept 1 at KOP 5.

Some of the other project elements proposed on the center and eastern properties may be visible from KOP 5 through at least 2050, but these elements are relatively small in size and scale when viewed from a 2-mile distance and would not contribute to a reduction in the quality of the view. Once it has grown sufficiently large, the landfill mound on the western property would fully screen these elements from view. Development of the complementary and programmatic elements on the western property occurring after 2050 may be visible from this location and would result in additional visual impacts, particularly in the case of elements that would be taller than the perimeter fence and landscaping.

KOP 5 is located near a small residential community at the intersection of Amoruso Way and Sunset Boulevard West. Residential viewers tend to have high sensitivity to visual changes because they spend more time in the area and are accustomed to the existing views. With a notable drop in visual quality in an area with sensitive viewer groups, changes to the visual landscape that result from implementing Plan Concept 2 may be significant.

a. KOP 1 – Simulated view of Plan Concept 2 2050, as seen from near the Sun City Lincoln Hills Community Center.

b. KOP 1 – Simulated view of Plan Concept 2 Full Buildout, as seen from near the Sun City Lincoln Hills Community Center.

Simulations are artistic renderings of what the project features are expected to look like following implementation of the Proposed Project.

Figure 5-24. KOP 1 – Plan Concept 2
Draft Environmental Impact Report
Renewable Placer: Waste Action Plan
Placer County, California

a. KOP 2 – Simulated view of Plan Concept 2 2050, as seen from Twelve Bridges Drive.

b. KOP 2 – Simulated view of Plan Concept 2 Full Buildout, as seen from Twelve Bridges Drive.

Simulations are artistic renderings of what the project features are expected to look like following implementation of the Proposed Project.

Figure 5-25. KOP 2 – Plan Concept 2
Draft Environmental Impact Report
Renewable Placer: Waste Action Plan
Placer County, California

a. KOP 3 – Simulated view of Plan Concept 2 2050, as seen from Athens Avenue.

b. KOP 3 – Simulated view of Plan Concept 2 Full Buildout, as seen from Athens Avenue.

Simulations are artistic renderings of what the project features are expected to look like following implementation of the Proposed Project.

Figure 5-26. KOP 3 – Plan Concept 2
Draft Environmental Impact Report
Renewable Placer: Waste Action Plan
Placer County, California

a. KOP 4 – Simulated view of Plan Concept 2 2050, as seen from Fiddyment Road.

b. KOP 4 – Simulated view of Plan Concept 2 Full Buildout, as seen from Twelve Bridges Drive.

Simulations are artistic renderings of what the project features are expected to look like following implementation of the Proposed Project.

Figure 5-27. KOP 4 – Plan Concept 2
Draft Environmental Impact Report
Renewable Placer: Waste Action Plan
Placer County, California

a. KOP 5 – Simulated view of Plan Concept 2 2050, as seen from Sunset Boulevard West.

b. KOP 5 – Simulated view of Plan Concept 2 Full Buildout, as seen from Sunset Boulevard West.

Simulations are artistic renderings of what the project features are expected to look like following implementation of the Proposed Project.

Figure 5-28. KOP 5 – Plan Concept 2
Draft Environmental Impact Report
Renewable Placer: Waste Action Plan
Placer County, California

5.3.7 Impacts and Mitigation Measures.

A discussion regarding whether the visual effects of the Proposed Project will be significant pursuant to CEQA is provided in the following subsections. The CEQA Guidelines define a "significant effect" on the environment to mean a "substantial, or potentially substantial, adverse change in any of the physical conditions within the area affected by the project, including objects of historic or aesthetic significance" (*14 California Code of Regulations 15382*).

IMPACT 5-1	**Impacts to Visual Character and Quality**. The proposed project would expand Waste Recovery and Waste Disposal activities onto currently vacant portions of the project site and an expanded and taller landfill would reduce the visual quality of the site and its surroundings, resulting in a **significant and unavoidable** impact.

Plan Concept 1.

Plan Concept 1 would expand Waste Recovery and complementary and programmatic elements onto the western property and waste disposal elements onto the eastern property. The project elements on the western property would be visible to local viewers but would not represent a significant change to the overall landscape. The project elements on the western property would be consistent with the ECO Industrial designation of the site. Plan Concept 1 would expand the landfill's footprint and increase its maximum elevation by 129 feet compared with the existing condition. While the existing landfill mound is at a low enough elevation that it tends to blend in with its setting, the landfill as proposed under Plan Concept 1 would be much more prominent because of its larger size and height, resulting in greater levels of visual contrast with the surrounding open space and agricultural land uses. In many nearby views, the landfill would grow to become the dominant visual element. Additionally, the landfill would screen east- and northeast-facing views toward the Sierra Nevada foothills and mountains, the key scenic resources visible from the project area. The overall visual character and quality of the local landscape would be reduced from current levels. These effects would be experienced by sensitive receptors near the landfill, particularly residential communities immediately to the south and west. Therefore, the visual impacts associated with Plan Concept 1 would be significant.

Plan Concept 2.

Plan Concept 2 would also result in significant impacts to visual character and quality. While the final landfill elevation would be the same, the footprint of Plan Concept 2 would be 42 acres larger than Plan Concept 1. However, in comparing the simulations of the two Plan Concepts, the larger size of Plan Concept 2 may be discernable from some viewing locations, but it is not obvious. Plan Concept 2 also proposes the construction of a second, discrete landfill mound, which would increase the likelihood that a viewer would recognize the mounds as human-built landscape features, potentially having a negative effect on their experience of the view. These differences, resulting in a larger and more easily recognizable landfill, slightly increase the level of impact compared with Plan Concept 1.

Mitigation Measure 3-1: Impacts to Visual Character and Quality.

Because both Plan Concepts would expand the landfill's final elevation substantially above the surrounding area, mitigation measures intended to visually screen the landfill from local and distant viewpoints would be ineffective. Therefore, no mitigation measures are available to reduce this impact to a less-than-significant level.

Level of Significance after Mitigation.

Impacts to visual character and quality would remain significant.

IMPACT 5-2	**Impacts from Light or Glare**. New sources of light and glare would be consistent with local regulations intended to control and reduce lighting impacts. Additionally, proposed project lighting would not be out of scale in rapidly developing western Placer County. Impacts would be **less than significant**.

Plan Concept 1.

Plan Concept 1 would reconfigure the existing WPWMA facility layout, including the construction of several new facilities, and as such, would result in new sources of light and glare during project construction and operation. All temporary construction lighting and permanent facility lighting would be consistent with related local regulations, which are generally intended to control and reduce impacts associated with light and glare on neighboring properties.

Impacts of new light and glare sources associated with construction are limited by their nature because they are temporary. Construction of new facilities associated with Plan Concept 1 would occur in phases over a period of years, after which these sources of light and glare would be removed. To the extent feasible, project construction will be limited to daytime hours, further reducing the impacts of temporary lighting, which would be less than significant.

With the construction of several new facilities, there would be a net increase in the amount of permanent lighting required. However, the WPWMA facility is in close proximity to several cities, each a considerable source of existing light. New facility lighting would not be out of scale with surrounding development and would represent an incremental increase in the total amount of lighting used in the vicinity. Impacts to day and nighttime views from light or glare would be less than significant.

Plan Concept 2.

The two Plan Concepts would generally introduce similar amounts of new light and glare; however, impacts under Plan Concept 2 would be slightly increased compared with Plan Concept 1 because the landfill would operate for a longer period of time under Plan Concept 2. Impacts would remain less than significant.

IMPACT 5-3	**Impacts from Offsite Litter Generation**. Litter is generated offsite by vehicles accessing the MRF and the WRSL, resulting in a **significant and unavoidable** impact.

Plan Concept 1.

Litter is generated off the site by uncovered waste-haul vehicles accessing the MRF and the WRSL facilities. Prior WPWMA environmental documents concluded that this impact would be considered significant and unavoidable because even with an extensive litter control program in place, substantial litter would continue to be generated on local roads from uncovered waste-haul vehicles. Plan Concept 1 would increase the amount of material received at the facility, potentially increasing the amount of offsite litter generated, and extend the period over which it is received by many decades. Based on the prior EIR's conclusion that offsite litter generation from waste-haul vehicles would be considered a significant and unavoidable impact, Plan Concept 1's contribution to an increased amount of offsite litter generation and to the extended duration of this impact would also be considered significant and unavoidable.

Plan Concept 2.

Plan Concept 2 would result in a significant and unavoidable impact that would be increased compared with Plan Concept 1 because of the 9-year-longer landfill site life associated with Plan Concept 2.

Mitigation Measure 5-3: Impacts from Offsite Litter Generation

Although an extensive offsite litter control program is in place at the facility and would continue in the future with implementation of the proposed project, the impact of increased litter through the extended life of the WRSL would be considered significant and unavoidable. Therefore, WPWMA would implement a tarping policy that requires incoming loads to use tarps, thus minimizing the potential for offsite litter generation. However, even with implementation of a tarping policy, this impact would remain significant.

Level of Significance after Mitigation

Impacts caused by offsite litter generation would remain significant.

5.4 References

California Department of Transportation (Caltrans). 2019. *California Scenic Highway Program – List of Eligible and Officially Designated Scenic Highways.* https://dot.ca.gov/-/media/dot-media/programs/design/documents/desig-and-eligible-aug2019_a11y.xlsx.

Federal Highway Administration (FHWA). 2015. *Guidelines for the Visual Impact Assessment of Highway Projects*.

Placer County. 2013. *Placer County Landscape Design Guidelines*. Accessed July 19, 2021. https://www.placer.ca.gov/DocumentCenter/View/9391/Landscape-Design-Guidelines-PDF.

Placer County. 2019a. *Final Environmental Impact Report (FEIR) for the Sunset Area Plan/Placer Ranch Specific Plan.* Accessed July 19, 2021. https://www.placer.ca.gov/2702/Sunset-Area-Plan---Placer-Ranch-Specific.

Placer County. 2019b. *Sunset Area Plan*. Accessed July 19, 2021. https://www.placer.ca.gov/DocumentCenter/View/47887/Sunset_Area_Plan_Dec2020?bidId=.

Western Placer Waste Management Authority (WPWMA). 2017. *Joint Technical Document.*

.

6. Air Quality

This chapter describes the existing air quality conditions and odor setting, identifies applicable regulations, and evaluates potential air quality impacts that could result from implementation of the proposed project under Plan Concept 1 and Plan Concept 2 of the Renewable Placer: Waste Action Plan (WPWMA 2020a). Where the analysis indicates that significant air quality impacts would result from project implementation, mitigation measures are recommended to reduce impacts. The environmental and regulatory settings for air quality in the project area have been described previously in the Sunset Area Plan (SAP) Draft Environmental Impact Report (DEIR) and Final Environmental Impact Report (FEIR) (Placer County 2018, 2019) and Placer County Conservation Program (PCCP) Environmental Impact Report (EIR) (Placer County 2020). The descriptions of the environmental and regulatory settings for air quality in this section have been adapted from those references, with updates of pertinent information for the proposed project.

The methods used to conduct this air quality analysis are consistent with guidance from the Placer County Air Pollution Control District (PCAPCD), the California Air Resources Board (CARB), the California Office of Environmental Health Hazard Assessment (OEHHA), and the U.S. Environmental Protection Agency (EPA). The approach was also part of ongoing discussions with the PCAPCD through a technical air group. The analysis addresses pertinent comments from the public and agency scoping period, including general concerns from the County of Placer – Office of the County Executive about air quality, odor, traffic, and cumulative impacts, and specific concerns about impacts associated with odors emitted from the Western Regional Sanitary Landfill (WRSL), composting operations, waste excavation and relocation, and other sources in the project area.

6.1 Methodology

The proposed project, with implementation of project design measures, would generate construction and operational emissions of nitrogen oxides (NOx), reactive organic gases (ROG),[17] particulate matter with aerodynamic diameter less than or equal to 10 microns (PM_{10}), particulate matter with aerodynamic diameter less than or equal to 2.5 microns ($PM_{2.5}$), carbon monoxide (CO), and sulfur oxides (SOx). The proposed project would also result in toxic air contaminant (TAC) emissions and odors.

The methods used to estimate emissions and assess potential impacts to air quality and human health for the proposed project are consistent with the California Environmental Quality Act (CEQA) Air Quality Handbook (PCAPCD 2017a) and accepted industry standards. The two separate Plan Concepts associated with the proposed project have been analyzed at an equal level. Plan Concept 1 and Plan Concept 2 would include similar project elements, but the locations, timing, and characteristics of the elements would differ. The Methodology for Air Quality and Greenhouse Gas Impact Analysis (Jacobs and WPWMA 2020b), presented in Appendix C.1, provides additional details regarding the PCAPCD-approved methods used to quantify and analyze potential air quality and health impacts associated with emissions from project-related construction and operations, fugitive emissions, air toxics, greenhouse gases (GHGs), and odors. Emission calculations quantifying criteria pollutant, TAC, and GHG emissions estimates for the proposed project are presented in Appendix C.2. LandGEM modeling results showing predicted annual landfill gas generation values for the proposed project are included in Appendix C.3. The Air Dispersion and Health Risk Assessment Modeling Protocol (Jacobs and WPWMA 2020a) detailing the methods used to complete the health risk assessment (HRA) is provided in Appendix C.4. The Health Risk Assessment Modeling Report (Jacobs and WPWMA 2021), which contains the results of the HRA, is presented in Appendix C.5.

[17] Throughout this document, the terms reactive organic gases (ROG) and volatile organic compounds (VOCs) have been used interchangeably.

Emissions have been estimated for the incremental increases in activity over time associated with the proposed project; emissions have not been calculated for the existing facility operations. Baseline activity levels in 2018 and future activity levels forecasted for 2050 have been quantified to assess the changes in activity levels associated with each Plan Concept. Some activities, such as landfilling, are expected to extend beyond the project time frame, but the analysis focuses on impacts through 2050 as the project period due to uncertainty associated with operations occurring more than 30 years in the future.

To answer the CEQA questions and evaluate the significance of impacts, estimates of total project-related construction emissions and estimated net changes in total operational emissions have been compared to the PCAPCD CEQA significance thresholds for construction phase, operational phase, and cumulative-level emissions, as described in the 2017 CEQA Air Quality Handbook (PCAPCD 2017a). In addition, an HRA has been conducted to assess potential impacts to human health associated with TAC emissions from the proposed project, consistent with the OEHHA 2015 *Guidance Manual for Preparation of Health Risk Assessments* (OEHHA 2015).

For air quality impacts identified as significant or potentially significant, mitigation measures have been identified. When feasible, the effectiveness of mitigation measures has been assessed and results compared to applicable air quality thresholds of significance.

Methodologies were developed and used for the following existing and proposed sources of emissions:

- Construction Emissions, including emissions associated with construction-related off-road equipment exhaust, on-road vehicle exhaust, and fugitive dust. Emissions would be generated due to construction of new and updated facilities and infrastructure for solid waste elements, complementary and programmatic elements,[18] and supporting elements.
- Operation Emissions, including operation-related off-road equipment exhaust, on-road vehicle exhaust, stationary-source exhaust, fugitive dust, fugitive landfill gas (LFG), and compost facility process emissions. Operational activities for the proposed project would include incremental increases in the following:
  - Onsite and offsite vehicle trips, including waste haul truck trips and worker commute trips
  - Fugitive LFG
  - Operation of the LFG-to-energy plant and flare(s)
  - Off-road equipment used to place and cover waste in the landfill modules

[18] Complementary and programmatic elements will include proposed compatible manufacturing, pilot study area, university research area, and LFG to compressed natural gas (CNG) area. These are all defined under a variety of light-industrial, laboratory research, and manufacturing land uses. The associated construction emissions were calculated using CalEEMod with the defined manufacturing land use type and building footprint area. Construction of 300,000 square feet (ft^2) of building space and 300,000 ft^2 of parking and roads for complementary elements was analyzed quantitatively. This analysis did not quantitatively evaluate the timing or impacts of full buildout of complementary and programmatic elements (1,900,000 ft^2 of building space and associated parking and roads), nor does it provide project-level analysis of the air quality impacts of construction of specific types of industrial activities. Additional project-level analysis and air permits from PCAPCD may be required prior to construction.

- Off-road equipment and processes to operate updated facilities for materials recovery, composting, construction and demolition (C&D) waste management, and the public waste and household hazardous waste drop-off areas
- Operation of complementary and programmatic elements[19]

Additional information regarding current site operations can be found in Chapter 1: Introduction. Detailed descriptions of proposed changes associated with Plan Concept 1 and Plan Concept 2 can be found in Chapter 3: Project Description.

As part of the methodology, current emission reduction measures implemented at the Western Placer Waste Management Authority (WPWMA) facilities were identified, and additional best management practices (BMPs) were developed to reduce emissions during construction and operation. These current emission reduction measures and additional BMPs, listed in Table 6-1, would be incorporated into the proposed project as project design measures. Documented emission reduction benefits are referenced and reflected in the construction and operation emissions calculations provided in Appendix C.2.

Table 6-1. Current Emission Reduction Measures and Best Management Practices Incorporated as Project Design Measures

Current Emission Reduction Measures: The WPWMA currently implements the following emissions reductions measures on an ongoing basis, and these measures would continue to be implemented during construction and operation of the proposed project.
▪ Onsite vehicles are routed along the most direct, feasible routes (while also considering safety).
▪ Electrically powered equipment is used to the extent feasible.
▪ Speed limits of 25 miles per hour (mph) on paved roads and 15 mph on unpaved roads are currently enforced. Speed limits of 15 mph on paved and unpaved roads will be enforced under the proposed project.
▪ Permanent onsite haul roads are paved, to the extent feasible.
▪ Temporary unpaved roads are surfaced with low-dust courses of material.
▪ Unpaved roads are watered 2 times daily, dependent on conditions, including weather.
▪ Soil stabilizers are used in areas with long-term exposure of disturbed or unvegetated surfaces (for example, stockpiles).
▪ Trucks hauling dirt, sand, or other loose materials for onsite construction projects on public roadways are covered or maintain at least 2 feet of free board in accordance with the requirements of *California Vehicle Code* Section 23114.
▪ Disturbed areas are covered with erosion control materials if needed.
▪ Street sweepers are used on paved areas adjacent to Waste Recovery operations as needed during rainy periods to reduce mud, and during dry periods to reduce dust.

[19] Operation of 300,000 ft^2 of building space and 300,000 ft^2 of parking and roads for complementary elements was analyzed quantitatively using CalEEMod with the defined manufacturing land use type and building footprint area. This analysis does not provide project-level analysis of the air quality impacts of operation of specific types of industrial activities. Additional project-level analysis and air permits from PCAPCD may be required.

Table 6-1. Current Emission Reduction Measures and Best Management Practices Incorporated as Project Design Measures (continued)

Current Odor Management Practices: The WPWMA currently implements the following emissions reductions measures on an ongoing basis, and these measures would continue to be implemented during construction and operation of the proposed project.
▪ Materials recovery facility (MRF) odor management practices focus on timely and consistent processing of the materials and regular housekeeping and cleaning to avoid the accumulation of potentially odiferous materials: – Process waste (sort materials to recover marketable commodities and transport residue to the WRSL for burial) within 48 hours of receipt. – Screen alternative daily cover (ADC) generated from MRF fines to a 0.5-inch minus size to limit food waste presence. – Transport all ADC to the WRSL daily as produced; no overnight storage of ADC at the MRF. – Transport residual wastes to the WRSL daily as produced; limit overnight storage of residue in trailers to situations in which the MRF is operated outside of the landfill waste acceptance hours. – Continuously operate the stormwater pond aeration system to the degree that (1) the aerators are fully submerged and (2) the dissolved oxygen level in the pond is less than 1 milligram per liter. ▪ WRSL odor management practices are implemented to minimize the potential for offsite odors: – Promptly place daily and intermediate cover; minimize open-air exposure time of wastes. – Plan each day's filling operations and when areas of previously buried waste will need to be exposed. – At start of daily filling operations, establish one or more daily active working faces. The daily active working face is the only area(s) where wastes are exposed. – Minimize the size of the working face to that necessary to maintain operator and customer safety. – Bury sludges and other highly odiferous loads immediately upon receipt. – Use soil or "fines" recovered from the MRF or C&D processing as ADC as follows: • A 6-inch minimum layer of onsite, native soil. • A 6-inch layer of MRF fines covered by a 6-inch layer of onsite, native soil. • A 6-inch layer of MRF fines covered by a 6-inch layer of C&D fines. • Restrict use of ADC fines to areas that will receive additional fill within 24 hours. • Exposure of ADC fines more than 24 hours is prohibited. – At the end of each operating day, place a layer of daily cover materials (soil or ADC) over the active working face to completely cover all wastes. – Compact daily cover to minimize odor transmission by track-walking the materials with a Caterpillar D-6 low ground pressure dozer or equivalent, at a minimum. – Daily cover soil may be removed at the start of the operational filling day to minimize overall soil disposal rates. MRF fines and dried sewage sludge used as ADC remain in place once applied. – Place and compact a minimum of 12 inches of intermediate soil cover over areas where landfilling operations will not occur for 180 days or more. ▪ Compost (organics management) odor management practices: – Implement the odor impact minimization plan (OIMP) (WPWMA 2018, 2020c). – Initial processing (grinding) of green materials is performed within 7 calendar days of receipt. – Windrow composting is limited to green waste only unless otherwise approved; all other materials are composted using aerated static pile (ASP) methods. – Maintain materials in the composting windrows for at least 8 weeks. – Continuously operate the compost pond aeration system to the degree that (1) the aerators are fully submerged and (2) the dissolved oxygen level in the pond is less than 1 milligram per liter.

Table 6-1. Current Emission Reduction Measures and Best Management Practices Incorporated as Project Design Measures (continued)

▪ LFG odor management practices implemented at the WRSL to minimize the potential for LFG odors: – Comply with the provisions of 40 *Code of Federal Regulations* (CFR) Part 60 Subpart WWW and Title 17, *California Code of Regulations* (CCR) Section 95460, et seq. – Maximize the recovery of LFG from the WRSL.
Construction Emission Reduction BMPs Incorporated as Project Design Measures:
▪ The WPWMA would require the following Construction BMPs and include them as specifications for project-related construction and building contracts and Standard Notes on Grading/Improvement Plans submitted for construction: – Prior to beginning construction activity, Contractor(s) must submit a Construction Emission/Dust Control Plan to PCAPCD when the project area to be disturbed is greater than one acre. The Dust Control Plan must be submitted to the PCAPCD a minimum of 21 days before construction activity is scheduled to commence. The Dust Control Plan can be submitted online via the fill-in form: http://www.placerair.org/dustcontrolrequirements/dustcontrolform. – Suspend grading during excessive wind speeds (including gusts) or when dust exceeds PCAPCD Rule 228 fugitive dust limits. – Dust cannot exceed 40 percent opacity, or go beyond property boundary at any time (PCAPCD Rule 228). – Limit traffic speeds on unpaved surfaces to 15 mph or less during construction (PCAPCD Rule 228). – Use surface stabilization, vegetative cover, paving, or approved methods to minimize wind-driven dust (PCAPCD Rule 228). – Apply water or use another method to control dust offsite (PCAPCD Rule 228). – Reduce the amount of the disturbed area where possible. – Water all exposed surfaces and disturbed areas within the construction areas at least twice daily. Exposed surfaces include, but are not limited to, soil piles, graded areas, unpaved parking areas, staging areas, and access roads. – Clean vehicles to prevent dirt release/track-out (PCAPCD Rule 228). – Keep adjacent streets clean of all dirt, etc., and "wet broom" any track-out from construction vehicles and equipment (PCAPCD Rule 228). – Use wet power vacuum street sweepers to remove any visible track-out mud or dirt onto adjacent public roads at least once a day. Use of dry power sweeping is prohibited. – Maintain equipment per manufacturer's specifications. – Exhaust emissions cannot exceed PCAPCD Rule 202 visible emissions limits. If exceeded, must cease operations and repair equipment within 72 hours. – Fuel all off-road and portable diesel equipment with CARB-certified diesel fuel. – Minimize idling time to less than 5 minutes for all diesel equipment, either by shutting equipment off when not in use or reducing the time of idling to 5 minutes (as required by the state airborne toxics control measure [Title 13, Section 2485 of the CCR]). Signs shall be posted in the designated queuing areas or job sites to remind drivers and operators of the 5-minute idling limit. – No diesel engine idling, or staging or queuing areas, within 1,000 feet of any sensitive receptor. – No use or manufacture of cutback or emulsified asphalts unless compliant with PCAPCD Rule 217.

Table 6-1. Current Emission Reduction Measures and Best Management Practices Incorporated as Project Design Measures (continued)

– Use electrical engines and equipment or clean fuels in generators rather than temporary diesel generators to the degree practical. – Prohibit open burning of removed vegetation (PCAPCD Rule 304). – Obtain air permits for any device or process that emits 2 pounds per day (lb/day) or more of pollutants, prior to construction/building permit issuance (PCAPCD Rule 501). ▪ Contractors must certify compliance with the State Off-Road Diesel Regulation and all diesel construction equipment must meet CARB's Tier 4 standards for off-road heavy-duty diesel engines, if feasible. ▪ Contractors must certify compliance with comply with the State On-Road Diesel Regulation and all on-road heavy-duty diesel trucks must meet CARB's Tier 3 standards for on-road heavy-duty diesel engines, or better, if feasible. ▪ Building contractors must provide the following at truck loading/unloading facilities: – Power outlets (one 110/208-volt power outlet for every two dock doors or truck parking spaces). – Signage to indicate no idling of diesel engines for more than 5 minutes. – Posted instructions for idling trucks to connect to outlets to run auxiliary equipment. ▪ Commercial buildings must be designed to meet Green Building Standards, including the following:[a] – 10 percent or greater reduction in energy use compared with 2016 Title 24 code-compliant building through energy efficiency measures or onsite renewable energy systems. – Cool roofs. – Water efficiency and conservation. – Accessible 100-volt electrical receptacles for powering of landscaping equipment and alternatives to fossil fuel generators. – Energy Star appliances and fixtures. – On-demand hot water heaters. ▪ Buildings must meet 2019 Title 24 energy efficiency standards (effective on January 1, 2020) (CEC 2018).[a] ▪ Contractors must include the following as conditions of building permits:[a] – 10 percent of parking spaces to provide electric vehicle service (charging) equipment (EVSE), or a minimum of 2 EVSE spaces for building with 2 to 10 spaces. – If more than 20 parking spaces, provide 5 percent of spaces as clearly marked, dedicated preferential parking spaces for carpools and zero-emission vehicles. – Bicycle parking areas near entrances.
Operational Emission Reduction BMPs Incorporated as Project Design Measures:
▪ The WPWMA would require the following Operational BMPs and include them as specifications on project-related contracts: – Implement dust and emission reduction BMPs from above list of Construction Emission Reduction BMPs, to the extent appropriate and feasible for solid waste elements. – Design landscaped areas with native drought-resistant plants (ground covers, shrubs, and trees) with particular consideration in plantings that are not reliant on gas-powered landscape maintenance equipment.[a]

Table 6-1. Current Emission Reduction Measures and Best Management Practices Incorporated as Project Design Measures (continued)

▪ Fully transition composting process from windrows to ASP, including the following: – Composting operations shall be performed consistent with the 2020 SWOP (Appendix C.6) based on weather predictions and odor risk management results. – Grinding, management, mixing, pile construction and maintenance, curing of green waste, food waste, and ASP composting materials, and storage of finished product shall be conducted according to required schedules, per the 2020 SWOP (Appendix C.6). – A biofilter cover composed of 12 inches of finished compost shall be applied over ASP piles. – ASP surface areas shall be washed down daily to remove leachate. – Leachate and compost pond aeration systems shall be managed, monitored, and periodically cleaned to maintain proper operating conditions.
▪ Use water suppression during compost screening and grinding and wood chipping and grinding operations for fugitive dust control. ▪ Use water misters and other feasible emission controls during asphalt and concrete crushing and screening operations for fugitive dust control. ▪ Where feasible and practical, perform onsite material management with electronic conveyors or trucks equipped with Tier 4 engines. ▪ Provide or use power outlets (one 110/208-volt power outlet for every two dock doors or truck parking spaces) at truck loading/unloading facilities. ▪ Comply with posted signage indicating no idling of diesel engines for more than 5 minutes. ▪ Comply with posted instructions for idling trucks to connect to outlets to run auxiliary equipment.
▪ Optimize efficiency of LFG collection system. ▪ Optimize use of remaining LFG-to-energy plant capacity to produce electricity from collected LFG and to minimize flaring of collected LFG.

[a] Project design measure for buildings constructed or operated as part of the proposed project or complementary and programmatic elements.

6.2 Environmental Setting

This description of the environmental setting for air quality in the proposed project area has been adapted from descriptions in the SAP DEIR and FEIR (Placer County 2018, 2019), with pertinent updates.

The proposed project area is in west Placer County, in the Sacramento Valley Air Basin (SVAB). The SVAB comprises the western portion of Placer County, the eastern portion of Solano County, and all of Shasta, Tehama, Glenn, Butte, Colusa, Sutter, Yuba, Yolo, and Sacramento Counties.

Ambient concentrations of air pollutants in the SVAB are affected by the amount and types of pollutants emitted and the atmosphere's ability to transport and dilute such emissions. Natural factors that affect transport and dilution include terrain, wind, atmospheric stability, and the presence of sunlight. Air quality conditions in the SVAB depend on the types and levels of emissions released by air pollutant sources, in combination with natural factors such as climate, meteorology, and topography. The following subsections describe natural conditions and three types of pollutants of concern in the SVAB, including criteria pollutants, toxic air contaminants, and odorous compounds.

6.2.1 Climate, Meteorology, and Topography

The SVAB is a relatively flat area bordered by the Northern Coast Ranges to the west and the northern Sierra Nevada to the east. Air flows into the SVAB through the Carquinez Strait, the only breach in the western mountain barrier, and moves across the Sacramento–San Joaquin Delta (Delta) from the San Francisco Bay Area.

The Mediterranean climate in the SVAB is characterized by hot, dry summers and cool, rainy winters. During the summer, daily temperatures in the air basin range from 50 degrees Fahrenheit (°F) to more than 100°F. The average winter temperature is a moderate 49°F. The inland location and surrounding mountains tend to shelter the area from the ocean breezes that keep the coastal regions moderate in temperature. Most precipitation in the area results from air masses that move in from the Pacific Ocean, usually from the west or northwest, during the winter months. The prevailing winds are moderate in speed and vary from moisture-laden breezes from the south/southeast to dry land flows from the north/northwest.

The mountains surrounding the SVAB create a barrier to airflow, entrapping air pollutants when meteorological conditions are unfavorable for transport and dilution. Poor air movement occurs more frequently in the fall and winter when high-pressure cells are present over the SVAB. The lack of surface wind during these periods, combined with the reduced vertical flow caused by a decline in surface heating, reduces the influx of air and leads to higher concentrations of air pollutants under stable meteorological conditions. Surface concentrations of air pollutants like particulate matter (PM) are highest when these conditions occur in combination with temperature inversions, which hinder dispersion and trap air pollutants near the ground.

Elevated levels of ozone (O_3) typically occur May through October in the SVAB. This period is characterized by poor air movement in the mornings, relieved by the Delta breeze from the southwest in the afternoons. In addition, longer, sunny daylight hours fuel photochemical reactions between ROG and NOx, which form O_3. Typically, the Delta breeze transports air pollutants northward out of the SVAB; however, a phenomenon known as the Schultz Eddy prevents this from occurring during approximately half of the time from July to September. The Schultz Eddy phenomenon causes the wind to shift southward and blow air pollutants back into the SVAB. This phenomenon exacerbates the concentration of air pollutant emissions in the area and contributes to violations of ambient air quality standards.

The local meteorology in the proposed project area is represented by measurements recorded at the Lincoln Regional Airport (Karl Harder Field) station, approximately 5 miles north of the proposed project area. Figure 6-1 provides a wind rose for wind data collected from 2009 to 2018 at the Lincoln Airport (Nortech Waste LLC 2020, WPWMA 2020b). The predominant wind direction is from the southeast. Based on review of monthly wind roses for the Sacramento region provided in Appendix B of the 2020 WPWMA OIMP, the general direction of wind during winter months is from the south-southeast (to the north-northwest) and from the south-southwest (to the north-northeast) in the summer months. During the fall and early winter, winds trend in both directions, from southeast to northwest and from northwest to southeast (Nortech Waste LLC 2020; WPWMA 2020b).

The National Oceanic and Atmospheric Administration's National Centers for Environmental Information has records for that station dating back to 2009. According to these data, the average annual precipitation in the project area is approximately 20 inches, January temperatures range from a normal minimum of 36°F to a normal maximum of 56°F, and July temperatures range from a normal minimum of 61°F to a normal maximum of 96°F (Placer County 2018).

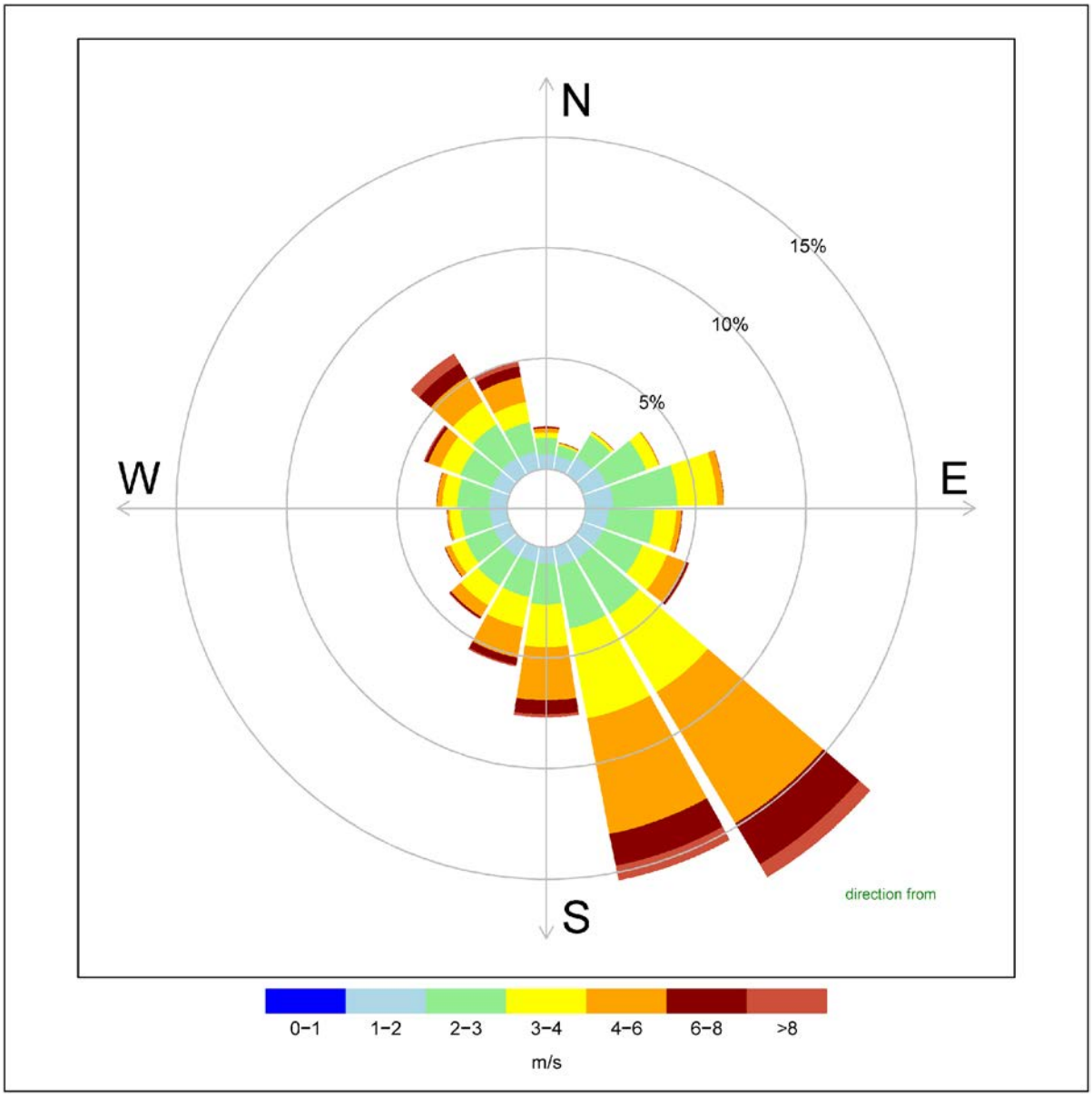

Location KARL HARDER FIELD, CA US	Average wind speed (m/s) 2.68
Observation Period From 2009–05–10 to 2018–05–10	Number missing 424
Project WPWMA	Total calm 42624
Comments Station ID: 720614–00205 Data is in 15–20 minute intervals	Anemometer threshold (m/s) 0.44704

Figure 6-1. Wind Rose - Lincoln Regional Airport
Draft Environmental Impact Report
Renewable Placer: Waste Action Plan
Placer County, California

Sources:
NIRS 2020, WPWMA 2020c (Nortech Waste LLC. 2020 (October 15). Nortech Incident Response System (NIRS). Roseville, CA.
WPWMA. 2020c (October). Odor Impact Minimization Plan: Western Placer Waste Management Authority Compost Facility. Revised.)

Jacobs

\\Dc1vs01\gisproj\W\WPWMA\Maps\Report\EIR\AirQuality\Figure_6-1_210729.mxd 7/29/2021

6.2.2 Criteria Air Pollutants

Ambient Air Quality Standards

The EPA has established National Ambient Air Quality Standards (NAAQS) with defined criteria for six pollutants to protect public health and welfare, with an adequate margin of safety. The NAAQS are the maximum allowable atmospheric concentrations for the six criteria pollutants: O_3, PM_{10}, $PM_{2.5}$, CO, NOx as nitrogen dioxide (NO_2), SO_2, and lead. The NAAQS include primary standards that provide public health protection and secondary standards that protect public welfare.

California's ambient air quality standards (CAAQS) have been established to protect the health of the most sensitive community members. CAAQS define the maximum amount of a pollutant (averaged over time) that can be present in outdoor air without harmful effects on people or the environment. CAAQS are often more stringent than the NAAQS. The current NAAQS and CAAQS are shown in Table 6-2

Air Monitoring Data and Attainment Designations.

Measured concentrations of the criteria air pollutants are used as indicators of ambient air quality. Monitoring data measured from 2017 to 2019 at the air quality monitoring stations closest to the project area are summarized in Table 6-3. Stations in Lincoln provide the closest recent data for O_3 and $PM_{2.5}$. For 2017, data from the station at 1445 First Street in Lincoln (6 miles from the site) have been used. For 2018 and 2019 data, the First Street station was no longer available, and the station at 2885 Moore Road, 2.6 miles from the site, provided monitoring data for O_3 and $PM_{2.5}$. The Lincoln stations do not measure PM_{10} concentrations, so PM_{10} data have been obtained from the next closest station, at 151 North Sunrise Boulevard in Roseville, approximately 12 miles from the proposed project area. CO concentrations have been obtained from the Blackfoot Way station in Antelope, approximately 11 miles from the site. Pollutant measurements taken at these stations over time are used by agencies to designate attainment status; details are provided in Table 6-3 to provide context for the relationship of the reported measurements to the area's attainment designations.

.

Table 6-2. National and California Ambient Air Quality Standards

Pollutant	Averaging Time	CAAQS[b]	NAAQS[a]	
			Primary[c]	Secondary[d]
O_3	8 hours 1 hour	0.070 ppm 0.09 ppm	0.070 ppm –	0.070 ppm –
PM_{10}	Annual arithmetic mean 24 hours	20 µg/m^3 50 µg/m^3	– 150 µg/m^3	– 150 µg/m^3
$PM_{2.5}$	Annual arithmetic mean 24 hours	12 µg/m^3 –	12 µg/m^3 35 µg/m^3	15 µg/m^3 35 µg/m^3
CO	8 hours 1 hour	9.0 ppm 20 ppm	9 ppm 35 ppm	– –
NO_2	Annual arithmetic mean 1 hour	0.03 ppm 0.18 ppm	0.053 ppm 0.100 ppm	0.053 ppm –
SO_2	24 hours 3 hours 1 hour	0.04 ppm – 0.25 ppm	– – 0.075 ppm[e]	– 0.5 ppm –
Lead[f]	Calendar quarter Rolling 3-month average 30-day average	– – 1.5 µg/m^3	1.5 µg/m^3 (certain areas) 0.15 µg/m^3 –	1.5 µg/m^3 – –
Visibility-reducing particles	8 hours	[g]	–	–
Sulfates	24 hours	25 µg/m^3	–	–
Hydrogen sulfide	1 hour	0.03 ppm	–	–
Vinyl chloride[f]	24 hours	0.01 ppm	–	–

Source: CARB 2016.

[a] NAAQS other than ozone, PM, and those based on annual averages or annual arithmetic means are not to be exceeded more than once a year. The ozone standard is attained when the fourth highest 8-hour concentration in a year, averaged over 3 years, is equal to or less than the standard. For PM_{10}, the 24-hour standard is attained when the expected number of days per calendar year with a 24-hour average concentration above 150 µg/m^3 is equal to or less than 1. For $PM_{2.5}$, the 24-hour standard is attained when 98 percent of the daily concentrations, averaged over 3 years, is equal to or less than the standard.

[b] CAAQS for ozone, CO (except Lake Tahoe), SO_2 (1-hour and 24-hour), NO_2, and suspended particulate matter (PM_{10}, $PM_{2.5}$, and visibility-reducing particles) are not to be exceeded. All others are not to be equaled or exceeded.

[c] NAAQS Primary Standards: The levels of air quality necessary, with an adequate margin of safety, to protect the public health.

[d] NAAQS Secondary Standards: The levels of air quality necessary to protect the public welfare from known or anticipated adverse effects of a pollutant.

[e] Final rule signed June 2, 2010. To attain this standard, the 3-year average of the 99th percentile of the daily maximum 1-hour average at each monitor within an area must not exceed 75 parts per billion.

[f] CARB has identified lead and vinyl chloride as toxic air contaminants with no threshold level of exposure for adverse health effects determined. CARB made this determination following the implementation of control measures at levels below the ambient concentrations specified for these pollutants.

[g] In 1989, CARB converted both the general statewide 10-mile visibility standard and the Lake Tahoe 30-mile visibility standard to instrumental equivalents, which are "extinction of 0.23 per kilometer" and "extinction of 0.07 per kilometer" for the statewide and Lake Tahoe Air Basin standards, respectively.

Notes:

µg/m^3 = microgram(s) per cubic meter
CAAQS = California Ambient Air Quality Standards
ppm = parts per million

Table 6-3. Summary of Annual Air Quality Data (2017–2019)

Ozone (O_3)[a]	2017	2018	2019
Maximum concentration (1-hour/8-hour, ppm)	0.117/0.088	0.110/0.083	0.089/0.076
Number of days state standard exceeded (1-hour/8-hour)	4/10	4/11	0/3
Number of days national standard exceeded (1-hour/8-hour)	0/9	0/11	0/1
Ozone (O_3)[b]	2017	2018	2019
Maximum concentration (1-hour/8-hour, ppm)	0.099/0.077	0.070/0.058	0.086/0.075
Number of days state standard exceeded (1-hour/8-hour)	1/11	0/0	0/4
Number of days national standard exceeded (1-hour/8-hour)	0/11	0/0	0/3
Respirable Particulate Matter (PM_{10})[a]	2017	2018	2019
Maximum concentration (24-hour/annual, µg/m3)	66.0/*	211.3/*	63.1/15.4
Number of days state standard exceeded (measured)	*	*	2
Number of days national standard exceeded (measured)	0	2	0
Fine Particulate Matter ($PM_{2.5}$)[b]	2017	2018	2019
Maximum concentration (24-hour, µg/m^3)	31.6	227.5	35.7
Annual average (µg/m^3)	*	*	*
Number of days national standard exceeded (measured)	*	*	*
Carbon Monoxide (CO)[c]	2017	2018	2019
Maximum 8-hour concentration (ppm)	1.3	4.0	1.4
Maximum 1-hour concentration (ppm)	1.6	4.1	1.9
Number of days national standard exceeded (measured)	0	0	0

Sources: CARB, 2021; EPA, 2021.

[a] Ozone and PM_{10} measurements from Roseville-N Sunrise Boulevard station at 151 North Sunrise Boulevard, Roseville, CA. Data from iADAM: Air Quality Data Statistics. *Attainment status: Area is designated as nonattainment for the 8-hour ozone NAAQS and CAAQS (0.070 ppm), and nonattainment for the 1-hour ozone CAAQS (0.09 ppm). Area is designated attainment for 24-hour PM_{10} NAAQS. For the PM_{10} NAAQS, the 24-hour standard is attained when the expected number of days per calendar year with a 24-hour average concentration above 150 µg/m^3 is equal to or less than 1. No annual NAAQS. Designated nonattainment for annual (20 µg/m^3) and 24-hour PM_{10} (50 µg/m^3) CAAQS. CAAQS for suspended particulate matter (PM_{10}, $PM_{2.5}$, and visibility-reducing particles) are not to be exceeded.*

[b] Ozone and $PM_{2.5}$ measurements for 2017 from Lincoln station at 1445 First Street; measurements for 2018 and 2019 from Lincoln station at 2885 Moore Road (Station was moved). Data from iADAM: Air Quality Data Statistics. *Attainment status: Area is designated as nonattainment for the 8-hour ozone NAAQS and CAAQS, and nonattainment for the 1-hour ozone CAAQS. Designated nonattainment for 24-hour $PM_{2.5}$ NAAQS (attainment for annual). The 24-hour standard is attained when 98 percent of the daily concentrations, averaged over 3 years, is equal to or less than the standard of 35 µg/m^3. Designated attainment for annual $PM_{2.5}$ CAAQS of 12 µg/m^3 (no 24-hour standard). CAAQS for suspended particulate matter (PM_{10}, $PM_{2.5}$, and visibility-reducing particles) are not to be exceeded.*

[c] CO measurements from North Highlands-Blackfoot Way station at 7823 Blackfoot Way, Antelope, CA. Data from EPA's Monitor Values Reports.

Note:
* = insufficient data

As indicated previously, the EPA and CARB use monitoring data collected over time to classify or designate air basins (or portions thereof) as either "attainment" or "nonattainment" with respect to the NAAQS and CAAQS. Table 6-4 summarizes the EPA- and CARB-designated attainment status for each of the criteria air pollutants in Placer County. Portions of the County are within the Sacramento nonattainment areas for the O_3 and $PM_{2.5}$ NAAQS, and portions of Placer County are also designated by CARB as nonattainment for the O_3 and PM_{10} CAAQS (EPA 2020; CARB 2020). As a result, in the proposed project area, the criteria pollutants of primary concern are the nonattainment pollutants: O_3, PM_{10}, and $PM_{2.5}$, along with the pollutants known to act as precursors to these nonattainment pollutants. For example, NOx and ROG, also known as volatile organic compounds (VOCs), are precursors to O_3.

Table 6-4. Attainment Status Designations for Placer County

Pollutant	Federal Standard	State Standard
Ozone	No Federal Standard (1-hour)	Nonattainment (1-hour)
	Nonattainment (8-hour)[a]	Nonattainment (8-hour)
PM_{10}	Attainment (24-hour)	Nonattainment (24-hour)
		Nonattainment (Annual)
$PM_{2.5}$	Nonattainment (24-hour)	No State Standard for 24-Hour
	Attainment (Annual)	Attainment (Annual)
CO	Attainment (1-hour)	Attainment (1-hour)
	Attainment (8-hour)	Attainment (8-hour)
NO_2	Unclassified (1-hour)	Attainment (1-hour)
	Attainment (Annual)	Attainment (Annual)
SO_2	Attainment (1-Hour)	Attainment (1-hour)
	Attainment (24-hour)	Attainment (24-hour)
	Attainment (Annual)	No State Standard for Annual
Lead (Particulate)	Attainment (3-month rolling avg.)	Attainment (30-day average)

Source: PCAPCD, 2017a; EPA, 2020; CARB, 2018, 2020.

[a] Effective on July 20, 2012, EPA designated the Sacramento Metropolitan Area (including Placer County) as a nonattainment area with a Severe classification for the 2008 8-hour ozone NAAQS (0.075 ppm). In 2015, EPA promulgated a new 8-hour ozone NAAQS (0.070 ppm), and in 2018, designated the Sacramento Metropolitan Area as moderate nonattainment for the 0.070 ppm standard.

Notes:
CO = carbon monoxide
NO_2 = nitrogen dioxide
PM_{10} = particulate matter with aerodynamic diameter less than or equal to 10 microns
$PM_{2.5}$ = particulate matter with aerodynamic diameter less than or equal to 2.5 microns
SO_2 = sulfur dioxide

Criteria Pollutants and Associated Health Effects.

General information on the key criteria air pollutants in the SVAB, their origins, and the health effects associated with pollutant exposure have been described previously in the SAP DEIR (Placer County 2018). The descriptions in this section have been adapted from that reference, and it is cited here.

Ozone.

Ground-level O_3, the main ingredient in smog, is not emitted directly into the air but is a regional pollutant created when ROG and NOx chemically react in the presence of sunlight. ROG and NOx are emitted by cars, power plants, industrial boilers, refineries, chemical plants, and other sources. O_3 at ground level is a harmful air pollutant, because of its effects on people and the environment (Placer County 2018).

Acute health effects of O_3 exposure include increased respiratory and pulmonary resistance, cough, pain, shortness of breath, and lung inflammation. Chronic health effects include permeability of respiratory epithelia and possibility of permanent lung impairment. Emissions of the O_3 precursors ROG and NOx have decreased over the past two decades because of more stringent motor vehicle standards and cleaner burning fuels (Placer County 2018).

Oxides of Nitrogen as NO_2.

NO_2 is a brownish, highly reactive gas that is present in urban environments. The major human-made sources of NO_2 are fuel combustion devices, such as boilers, gas turbines, and mobile and stationary reciprocating internal combustion engines. Combustion devices emit primarily nitric oxide (NO), which reacts through oxidation in the atmosphere to form NO_2. The combined emissions of NO and NO_2 are referred to as NOx and are reported as equivalent NO_2. Because NO_2 is formed and depleted by reactions associated with O_3, the NO_2 concentration in a particular geographical area may not be representative of the local sources of NOx emissions (Placer County 2018).

Acute health effects of exposure to NOx includes coughing, difficulty breathing, vomiting, headache, eye irritation, chemical pneumonitis, or pulmonary edema, breathing abnormalities, cough, cyanosis, chest pain, rapid heartbeat, and death. Chronic health effects include chronic bronchitis and decreased lung function (Placer County 2018).

Particulate Matter.

PM_{10} is emitted directly into the air and includes fugitive dust, soot, and smoke from mobile and stationary sources, construction operations, fires, and natural windblown dust, as well as PM formed in the atmosphere by reaction of gaseous precursors. $PM_{2.5}$ includes a subgroup of smaller particles that have an aerodynamic diameter of 2.5 micrometers or less. PM_{10} emissions in the SVAB are dominated by emissions from area sources, primarily fugitive dust from vehicle travel on unpaved and paved roads, farming operations, C&D, and particles from residential fuel combustion. Direct emissions of PM_{10} are projected to remain relatively constant through 2035. Direct emissions of $PM_{2.5}$ have steadily declined in the SVAB between 2000 and 2010 and then are projected to increase slightly through 2035. Emissions of $PM_{2.5}$ in the SVAB are primarily generated by the same sources as emissions of PM_{10} (Placer County 2018).

Acute health effects of PM_{10} exposure include breathing and respiratory symptoms, aggravation of existing respiratory and cardiovascular diseases, and premature death. Chronic health effects include alterations to the immune system and the initiation of cancer formation, or carcinogenesis (Placer County 2018).

Carbon Monoxide.

CO is a colorless, odorless, and poisonous gas produced by incomplete burning of carbon in fuels, primarily in mobile (transportation) sources. Eighty-six percent of the nationwide CO emissions are from mobile sources. Most of the remaining 14 percent consists of CO emissions from power generation, refineries, and industrial sources. Other sources of areawide CO emissions are residential fuel combustion (including wood), waste burning, and fires. Emissions of CO have been declining statewide since the mid-1970s, when catalytic converters were first required in new vehicles. Despite increases in vehicle miles traveled (VMT), CO emissions are expected to continue to decrease into the future as automotive emission controls continue to improve. The highest concentrations of CO are generally associated with cold, stagnant weather conditions that occur during winter. In contrast to O_3, which tends to be a regional pollutant, CO tends to be localized (Placer County 2018).

CO affects human health by entering the bloodstream through the lungs by combining with hemoglobin, which normally supplies oxygen to the cells. However, CO combines with hemoglobin much more readily than oxygen does, resulting in a drastic reduction in the amount of oxygen available to the cells. Adverse health effects associated with exposure to CO concentrations include such symptoms as dizziness, headaches, and fatigue. CO exposure is especially harmful to individuals who suffer from cardiovascular and respiratory diseases (Placer County 2018).

6.2.3 Toxic Air Contaminants

In addition to the criteria pollutants, air quality is affected by the presence of TACs, also known as hazardous air pollutants (HAPs). TACs and HAPs are specific airborne pollutants that may pose a present or potential hazard to human health. In California, a TAC is defined as an air pollutant that may cause or contribute to an increase in mortality or in serious illness, or that may pose a hazard to human health. TACs are usually present in minute quantities in the ambient air; however, for some pollutants, their high toxicity or health risk may pose a threat to public health even at low concentrations.

A wide range of sources, from industrial plants to motor vehicles, emit TACs. The health effects associated with TACs are quite diverse and generally are assessed locally, rather than regionally. TACs can cause long-term or chronic health effects, such as cancer, birth defects, neurological damage, asthma, bronchitis, or genetic damage, or they may cause short-term acute effects such as eye watering, respiratory irritation (a cough), running nose, throat pain, and headaches.

For evaluation purposes, TACs are separated into cancer-causing chemicals (carcinogens) and noncarcinogens based on the physiological effects associated with exposure to the pollutant. Carcinogens are assumed to have no safe threshold below which no health impacts would occur. This contrasts with criteria air pollutants for which acceptable levels of exposure can be determined and for which the ambient standards have been established. Cancer risks from exposures to TACs are expressed as excess lifetime cancer cases per 1 million exposed individuals.

According to the *California Almanac of Emissions and Air Quality*, most of the estimated health risks from TACs can be attributed to relatively few compounds, one of the most important being diesel PM (PM emitted with exhaust from diesel engines) (Placer County 2018). Diesel PM differs from other TACs in that it is not a single substance, but rather a complex mixture of hundreds of substances. Although diesel PM is emitted by diesel-fueled internal combustion engines, the composition of the emissions varies depending on engine type, operating conditions, fuel composition, lubricating oil, and whether an emissions control system is being used. Unlike other TACs, no ambient monitoring data are available for diesel PM because no routine measurement method currently exists. However, CARB has made preliminary concentration

estimates based on a PM exposure method. This method uses the CARB emissions inventory's PM_{10} database, ambient PM_{10} monitoring data, and the results from several studies to estimate concentrations of diesel PM. In addition to diesel PM, the TACs for which data are available that pose the greatest existing ambient risk in California are benzene, 1,3-butadiene, acetaldehyde, carbon tetrachloride, hexavalent chromium, para-dichlorobenzene, formaldehyde, methylene chloride, and perchloroethylene (Placer County 2018).

Diesel PM poses the greatest health risk among these 10 TACs. Based on receptor modeling techniques, CARB estimated the level of cancer risk associated with the inhalation of diesel PM to be 360 in 1 million in the SVAB in 2000. Overall, statewide emissions of diesel PM are forecasted to decline by 71 percent between 2000 and 2035 (Placer County 2018).

6.2.4 Odorous Compounds

Air quality may also be affected by odorous compounds. Odors are generally regarded as an annoyance or nuisance, rather than a health hazard. However, manifestations of a person's reaction to foul odors can range from psychological (for example, irritation, anger, or anxiety) to physiological (for example, circulatory and respiratory effects, nausea, vomiting, and headache). The ability to detect odors is subjective and varies considerably in any given population. Some individuals can smell minute quantities of specific substances; others may not have the same sensitivity to odors in general; and still others may have variable sensitivity dependent on specific substances. In addition, people may have different reactions to the same odor: an odor that is offensive to one person may be acceptable to another (for example, fast-food restaurant or coffee roaster). It is important to also note that an unfamiliar odor is more easily detected and is more likely to cause complaints than a familiar one. This is because of the phenomenon known as odor fatigue, in which a person can become desensitized to almost any odor and recognition occurs only with an alteration in the intensity. Land uses that are major sources of odor typically include landfills, MRFs, composting operations, wastewater treatment and pumping facilities, painting/coating operations, feed lots/dairies, and various industrial uses such as chemical manufacturing and food processing (Placer County 2018).

The meteorological and topographical conditions in the project area described in Section 6.2.1 also affect the concentration and dispersion of odors. The area surrounding WPWMA's facilities generally experiences moderate wind patterns and minimal air movement or temperature inversion conditions most of the year. These factors can result in poor dispersion of odors and result in a greater potential for odors from the WPWMA facility and other regional odor sources to be perceived by nearby receptors, regardless of facility operations or time of day (See Appendix C.6; WPWMA 2020c).

Existing Odor Sources

The SAP DEIR and FEIR described several odor sources in the project area, including the WPWMA landfill (WRSL), landfill gas (LFG), composting operation, and MRF (Placer County 2018, 2019). The *Site Wide Odor Plan for the Western Placer Waste Management Authority's Solid Waste Processing and Disposal Facility* (See Appendix C.6, WPWMA 2020c) describes other non-WPWMA odor sources in the area, including biomass facilities, wastewater treatment plants (WWTPs), a septage management facility, dairy and poultry farms, and a propane dealer. Occasional manure spreading on agricultural fields at and near the project site can also be a source of odors.

There are two potential sources of odor from waste handling, composting, and landfill operations: aerobic (with air) decomposition of the organic components of waste, and gases produced by anaerobic (without air) bacterial digestion. Within the landfill, anaerobic bacterial digestion of buried waste produces LFG, and

only the organic fraction of the landfilled waste will decompose and produce LFG. LFG is composed predominately of equal parts of the odorless gases methane (CH_4) and carbon dioxide (CO_2). LFG also includes trace amounts of VOCs, sulfur-based compounds, and ammonia. It is generally the sulfur-based compounds and ammonia that result in LFG-related odors.

Depending on conditions during composting, odorous compounds may be emitted as products of aerobic and anaerobic degradation of organic materials at any stage of the process, from raw feedstock piles, active composting piles and windrows, curing piles, finished compost piles, grinding areas, biofilters, runoff storage ponds, puddles on the site, and even surfaces where organic materials have been stored. In general, organic materials in the early stages of decomposition present the greatest risk of odors because they generate greater quantities of natural and intermediate volatile compounds, and they need more oxygen to remain aerobic (CIWMB 2007).

An odor study was conducted by Environmental Management Consulting (EMC) for the site (the study references the site as WRSL) in 2015, including the collection of 97 samples from the compost windrows, MRF, landfill face, inactive landfill surfaces, and leachate pond. Samples were analyzed in the field for hydrogen sulfide and then shipped to a laboratory for odor analysis by an odor panel. The EMC study concluded that the composting operation had comparatively low odor emissions for a windrow composting operation; however, the composting windrows made up the largest single source of odor sampled at the facility. The active face of the landfill had odor emissions typical of municipal solid waste (MSW) landfills, but the ADC (nonearthen material used to cover the landfill's active face) had high odor compared to the MSW refuse (EMC 2015).

Existing Odor Controls

Odor management practices at MRFs, landfills, and composting facilities are implemented to prevent public nuisance and excessive odor impacts in nearby neighborhoods. The WPWMA currently implements and monitors BMPs to reduce the potential for odor from the MRF, landfill, LFG, use of ADC materials, the composting facility, and other facility operations. The WPWMA's current odor management practices are listed in Table 6-1. Additional information on odor control measures at the WPWMA facilities is provided in *Review of Odor Management at Western Regional Sanitary Landfill* (SCS Engineers 2017), and in the *Site Wide Odor Plan for the Western Placer Waste Management Authority's Solid Waste Processing and Disposal Facility* (See Appendix C.6, WPWMA 2020c).

At the MRF building, the WPWMA processes, screens, stores, and manages municipal wastes, recyclables, and residues according to required schedules for waste processing from receipt to removal or transfer to another operation. The materials processed at the MRF building are primarily mixed waste that includes organic materials and other putrescible wastes that have the potential to emit odors as they begin to decompose. BMPs for odor management at the MRF focus on timely and consistent processing of the materials and regular housekeeping and cleaning of the facility to avoid the accumulation of potentially odiferous materials. MRF fines are screened to a 0.5-inch minus size to reduce the potential for larger pieces of food waste and odorous compounds to be present in the fines used as ADC. No overnight storage of ADC is allowed, and overnight storage of residue is allowed only when the MRF is operated outside of landfill waste acceptance hours; ADC is transported to the landfill on the same day it is produced. All waste is removed from processing lines, floors, baling area, ADC load-out, and other surfaces under processing equipment. Asphalt areas around the MRF are cleaned with a street sweeper or similar. The stormwater pond aeration system is operated as needed, monitored, and managed to reduce formation of odorous compounds. Good housekeeping and equipment maintenance are key to reducing odors and minimizing system downtimes.

The WPWMA operates the composting operation according to an approved OIMP (WPWMA 2018). Measures for windrow composting include good housekeeping, processing the compostable materials quickly into piles, and monitoring pile temperature and moisture content so rotation and occasional watering of piles occurs at the appropriate time. The facility uses a compost turner or loaders that reach all layers of compost down to the concrete pad. To accommodate the increasing levels of organics diversion underway in California, the WPWMA is generally composting using an open windrowing method. However, the WPWMA recently conducted a pilot-level study to evaluate co-composting of green and food waste using an ASP composting method. The WPWMA worked with the PCAPCD to obtain permits for ASP composting for the entire organics management operation, while retaining approval to use windrow composting for a portion of the feedstock (nonfood feedstock). Grinding, management, mixing, and curing of green waste, food waste, and composting materials are conducted according to required schedules. Liquids from the composting operation are directed to compost leachate ponds, which are aerated, monitored, and managed to reduce formation of odorous compounds. The OIMP mandates schedules for periodic cleaning and removal of sediment, compost, and debris from the compost pads and leachate pond systems.

The WRSL's environmental protection measures include Subtitle D-compliant liners in the active waste disposal modules, leachate and condensate collection and removal systems, and an LFG collection system. One source of odors is the active face of the landfill, where the refuse is actively being placed and covered daily. The WPWMA minimizes open-air exposure time of wastes by applying daily cover using soil or an approved ADC, placing newer wastes over older wastes on a consistent basis, and burying more-odorous loads (e.g., sludge) immediately upon receipt. The WRSL maintains a relatively small active face, with a minimum of 0.25 to 0.5 acre in size and a maximum of 1 acre. Although the WRSL is permitted to operate 7 days per week, it does not typically operate on the weekends or holidays. When the WRSL is not in operation (that is, not actively receiving waste materials for burial), all in-place wastes are covered by soil or an approved ADC. This cover serves to reduce the potential for windblown litter, vectors, and odors.

Processed MRF fines, mechanically screened to a 0.5-inch minus size, are used as ADC. MRF fines are placed on the side slopes of the daily fill area that will receive waste the following day. The landfill operator may reject any load of MRF fines because of excessive amounts of food waste or odors. Rejected loads are buried with the day's waste. When the landfill receives material for use as ADC, it is placed that day (as needed); otherwise it is disposed. The WPWMA is limited to using MRF fines for ADC only in combination with native soil or C&D fines, and only in areas where subsequent waste disposal operations will occur within 24 hours. Daily cover is placed within 4 hours of last waste receipt. A minimum of 12 inches of intermediate soil cover is placed over areas where landfilling operations will not occur for 180 days or more, consistent with the regulatory requirements identified in CCR Title 27, Section 20700. The minimum level of compaction may be achieved via track-walking the intermediate cover soils materials with a Caterpillar D-8 dozer or equivalent over the surface to minimize odor transmission (See Appendix C.6; WPWMA 2020c). PCAPCD is notified if LFG piping must be disconnected or relocated if the WPWMA anticipates the outage will cause an exceedance of the air permit monitoring criteria.

The WPWMA's current LFG management system includes a series of collection wells that remove the LFG from the waste mass (via an applied vacuum) and convey the LFG in an enclosed piping system to a central location (blower/flare station). There, the LFG is either directed to the onsite energy developer to produce electricity or to an enclosed ground flare where it is destroyed through high-temperature combustion. In January 2018, the WPWMA completed upgrades to the landfill gas collection and control system (GCCS) to accommodate LFG flows for 15 years, optimize operational efficiency through redundant system components, and avoid operational interruptions (Placer County 2018). In October 2020, the WPWMA published the Draft *Landfill Gas and Leachate Management Standard Operating Procedures (SOPs)* to document the required procedures for operations and maintenance of the GCCS and

leachate collection and recovery system at the WRSL in compliance with regulatory requirements, including federal requirements in 40 CFR 60 Subpart WWW, New Source Performance Standards for Municipal Solid Waste Landfills, and California requirements in Title 17 CCR Sections 95460 to 95476, Methane Emissions from Municipal Solid Waste Landfills. These system upgrades and SOPs minimize disruptions and reduce fugitive emissions, thereby reducing odors, CH_4 and CO_2 (greenhouse gases), and air toxic emissions associated with fugitive LFG (WPWMA 2020d).

WPWMA Odor Monitoring and Notification History

As part of continuous assessment of odor control measures and community involvement, the WPWMA routinely engages with stakeholders and the public regarding odor emissions from solid waste operations. An odor workshop is held annually to discuss regional odor sources and odor monitoring, odor reduction efforts, and the status of future planning efforts. The WPWMA has implemented many of the recommended odor mitigation measures identified in public workshops and site-specific odor studies.

In addition to implementing odor BMPs, the WPWMA conducts onsite and offsite investigations of odors and operates a sitewide continuous odor monitoring system. As part of the odor monitoring system, WPWMA conducts predictive odor risk modeling, which allows for the development of a daily odor risk forecast. The odor risk forecast allows facility operators and contractors to plan operations and minimize the potential for offsite odors.

The WPWMA uses a continuous odor monitoring system (developed and manufactured by Odotech Inc.)[20] to record the intensity of odors generated at its facility. Results are interpreted through dispersion modeling and evaluation of meteorological conditions. The odor monitoring and dispersion modeling system is used to provide quantifiable, visual representations of the probable offsite odor concentrations over time associated with the WPWMA's operations. Using data from the WPWMA's onsite weather station and dispersion modeling system, the odor monitoring system generates a graphical representation of the potential offsite transport and dispersion of odors. The WPWMA uses this information to evaluate whether its facility may have been the primary or contributing source of the reported odor. Furthermore, in situations where the WPWMA's facility was identified as a likely source of the reported odor, the specific onsite source (e.g., LFG, composting operations, and waste processing operations) is identified. This helps the WPWMA identify possible operational changes or actions at its facility to reduce the intensity or frequency of odors experienced by nearby residents. The information from the onsite weather station may be consulted prior to the scheduling of major material handling activities, and daily records are logged to generate historical site-specific weather records.

The WPWMA actively solicits odor notifications and input from the community to improve odor control over time; community input provides a real-time feedback loop. Online odor notification tools make it easy for members of the public to submit odor notifications. While the total number of odor notifications has gone up over time, this may not indicate that odor has increased, but rather that the online tools and community engagement have made it easier to report odors.

An odor notification is considered valid and attributable to the WPWMA facility if it is not attributable to livestock, the City of Lincoln wastewater treatment and reclamation facility (WWTRF), or the nearby Rio Bravo biomass facility. This methodology may over-attribute odor notifications to the facility, but the notifications should be consistently over-attributed for the years evaluated. The number of notifications does not show a significant trend and varies from year to year. The data indicate that the landfill and the composting operations are the two sources most likely to result in odor notifications when compared to the

[20] In 2018, the assets of Odotech Inc. were acquired by Envirosuite Limited, a technology company listed on the Australian Stock Exchange (Edgehill 2018).

MRF, offsite sources, and other sources. Most complaints/notifications received since 2015 are clustered in residential areas of north Roseville south of the WRSL (WPWMA 2021).

The WPWMA generates an odor investigation report for odor notifications filed using the online system. The report provides (1) a 1-page summary of the odor notification and WPWMA's analysis of reported event and (2) a short video clip from WPWMA's odor monitoring and reporting system. These files are sent to the PCAPCD and can be provided to the public via email if an email address is included when the odor notification is filed.

Table 6-5 summarizes the total number of odor notifications and the number of notifications attributed in part or solely to WPWMA facilities from 2015 through 2020 and reported to WPWMA.

Table 6-5. Odor Notifications by Year Attributed to the WPWMA Facility

Year	Total Number of Notifications[a]	Number of Notifications Attributed to WPWMA
2015	327	123
2016	113	84
2017	290	193
2018	382	331
2019	185	115
2020	283	177

Source: Oddo, pers. comm. 2020

[a] The number of notifications includes odors associated with the landfill and sources co-located with the landfill including the composting operation and MRF.

PCAPCD Odor Monitoring and Complaint Reporting System

PCAPCD staff automatically receive an email from the WPWMA's online odor notification system whenever a notification is filed that summarizes the details of the notification. The PCAPCD is therefore made aware of every odor notification received by WPWMA and has their own website and telephone reporting system for odors and other air-related complaints. PCAPCD staff have an internal procedure for responding to the odor notifications and complaints, and they assign their resources and priorities to conduct independent odor investigations based on the information provided by the complainant. If an odor complainant reports an odor that is 4 or 5 on a 1 (low) to 5 (high) intensity rating scale and provides a phone number, PCAPCD staff will call to confirm the complaint, investigate, and take enforcement or corrective action if appropriate. PCAPCD responds to all complaints reported from 8 a.m. to midnight. PCAPCD has a wide range of options to address odor complaints and typically resolves any compliance issues or violations with no monetary penalty (Springsteen, pers. comm., 2021).

PCAPCD also keeps records of odor complaints submitted to them directly (Springsteen, pers. comm., 2021). In 2011, PCAPCD received one odor complaint for the Rio Bravo Rocklin wood-waste-to-energy power plant, located approximately 1.5 miles east of the project site. A neighbor claimed offensive odors from the "smoking boiler exhaust stack," but PCAPCD was unable to confirm this was the source of the complaint. PCAPCD staff have observed "very mild odor" from fuel pile wood chips during field inspection visits to the biomass facility.

Approximately 10 years ago, PCAPCD received some odor complaints about the City of Lincoln WWTRF, which is located approximately 2 miles north of the project site. The odors were attributed to the solar drying of waste sludge in a greenhouse-like structure at the plant. Complaints were no longer received after the wastewater treatment plant stopped this practice. Since that time, PCAPCD has received additional complaints from the same complainant but has not been able to verify that the wastewater treatment plant was the source of the complaint. PCAPCD staff have observed "very mild odor" during frequent patrols at the perimeter and during annual field inspection visits to the WWTRF.

Similarly, PCAPCD occasionally receives complaints about odors from the City of Roseville Pleasant Grove WWTP, which is located approximately 7 miles from the project site. PCAPCD staff that followed up on the complaints reported a mild odor issue, likely associated with sludge management and disposal.

PCAPCD has not received any odor complaints for the following facilities located on or near the project site:

- Energy 2001, which produces electricity using LFG onsite at 3195 Athens Avenue
- Green Solutions and More, a green waste acceptance service located at 2915 Lesvos Court, approximately 1 mile east of the project site
- Wastewater treatment plant at Thunder Valley Casino Resort at 1200 Athens Avenue, approximately 2 miles east of the project site
- Inviro-Tec Disposal LLC, a freight shipping and trucking company at 2480 Athens Avenue that accepts septage and separates the liquids from the solids (with liquids discharged to the sanitary sewer and solids typically transported to the WRSL for disposal), approximately 1.5 miles northeast of the project site
- Poultry farm on the southern side of East Catlett Road, approximately 0.8 mile west of Fiddyment Road
- Mallard Creek Inc., at 4095 Duluth Avenue in Rocklin, which accepts and processes wood waste for livestock bedding material, fuel pellets, industrial fibers, and landscaping applications, approximately 2 miles southeast of the project site
- Fg Dairy, a dairy farm at 6241 East Catlett Road, approximately 3 miles west of the project site
- Roseville Energy Park Power Plant, which uses natural gas to generate electricity, approximately 4 miles southwest of the project site

PCAPCD reports that the number of odor complaints in the area have generally been reduced in the past few years, likely due to favorable weather and the WPWMA's improvements in odor-related communication and management. In November 2020, over Thanksgiving weekend, PCAPCD received hundreds of complaints for odors in the area directly west of the landfill. Upon investigation, it was determined that the source of the odors was a farmer's application of chicken manure on the farm fields west of Fiddyment Road to prepare for winter planting. Implementation of the Sitewide Odor Program (SWOP), which PCAPCD intends to add to the operating permit for the WPWMA facility, should also reduce odors and the related notifications in the future (Springsteen, pers. comm., 2021).

Sensitive Land Uses

Sensitive receptors for air quality and odor-related impacts are generally considered to include those land uses where exposure to pollutants could result in health-related risks to sensitive individuals, such as children or the elderly. Residential dwellings, schools, daycare facilities, playgrounds, hospitals, residential care facilities, and similar facilities are of primary concern because of the presence of individuals

particularly sensitive to pollutants or the potential for increased and prolonged exposure of individuals to pollutants.

6.3 Regulatory Setting

The description of the regulatory setting for air quality in the proposed project area in this section has been adapted from descriptions in the SAP DEIR and FEIR (Placer County 2018, 2019) and PCCP EIR (Placer County 2020), with updates of pertinent information for the proposed project.

Air quality management in California is governed by the federal and California Clean Air Acts and the California *Health and Safety Code*. Several levels of government have adopted specific regulations that limit emissions from stationary and mobile sources, some of which would be applicable to the proposed project. The agencies having authority for air quality regulation are shown in Table 6-6. The applicable federal, state, and local laws, ordinances, regulations, plans, and standards, and compliance with these requirements is discussed in more detail in the following sections.

Table 6-6. Air Quality and Permitting Agencies

Agency	Authority	Address
EPA Region 9	Regulatory oversight	EPA Region 9 75 Hawthorne Street San Francisco, CA 94105 (415) 744-1259
CARB	Regulatory oversight	California Air Resources Board 2020 L Street Sacramento, CA 95814 (916) 322-6026
PCAPCD	Air quality permit issuance, enforcement	Placer County Air Pollution Control District 110 Maple Street Auburn, CA 95603 (530) 745-2330
Placer County Environmental Health	Solid waste facility permit, inspections, and enforcement	The Placer County Environmental Health and Human Services Department 3091 County Center Drive Suite 180 Auburn, CA 95603 (530) 745-2300

6.3.1 Federal

EPA has been charged with implementing national air quality programs. EPA's air quality mandates are drawn primarily from the federal Clean Air Act (CAA), which was enacted in 1970 and most recently amended by Congress in 1990.

Criteria Air Pollutants

EPA has established primary and secondary NAAQS for the following criteria air pollutants: O_3, CO, NO_2, SO_2, PM_{10}, $PM_{2.5}$, and lead. The primary standards protect the public health, and the secondary standards protect public welfare. NAAQS are presented in Table 6-3.

The CAA requires each state to prepare a state implementation plan (SIP) for attaining and maintaining the NAAQS. The federal Clean Air Act Amendments of 1990 (CAAA) added requirements for states with nonattainment areas to revise their SIPs to incorporate additional control measures to reduce air pollution. The SIP is modified periodically to reflect the latest emissions inventories, planning documents, and rules and regulations of the air basins as reported by their jurisdictional agencies. EPA is responsible for reviewing all SIPs to determine whether they conform to the mandates of the CAA and its amendments, and whether implementation will achieve air quality goals. If EPA determines a SIP to be inadequate, a federal implementation plan that imposes additional control measures may be prepared for the nonattainment area. If an approvable SIP is not submitted or implemented within the mandated time frame, sanctions may be applied to transportation funding and stationary air pollution sources in the air basin. In California, EPA has delegated authority to manage air quality and prepare SIPs to CARB, which in turn has delegated that authority to the individual air districts.

Hazardous Air Pollutants and Toxic Air Contaminants

HAPs are hazardous or toxic air pollutants that are known carcinogens or can cause other serious health impacts. Currently, 187 air pollutants are listed as HAPs by EPA, for example, benzene, which is found in gasoline, perchloroethylene emitted from some dry cleaners, asbestos which may occur naturally, solvents like methylene chloride, and metals such as mercury, chromium, and lead compounds. EPA regulates HAPs through its National Emission Standards for Hazardous Air Pollutants. The standards for a particular source category require the maximum degree of emission reduction that the EPA determines to be achievable, which is known as the Maximum Achievable Control Technology (MACT) standards. These standards are authorized by Section 112 of the 1970 CAA, and the regulations are published in 40 *Code of Federal Regulations* (CFR) Parts 61 and 63.

6.3.2 State

CARB is the agency responsible for coordination and oversight of state and local air pollution control programs in California and for implementing the California Clean Air Act (CCAA). The CCAA, which was adopted in 1988, required CARB to establish CAAQS (listed in Table 6-3).

Criteria Air Pollutants

CARB has established CAAQS for sulfates, hydrogen sulfide, vinyl chloride, visibility-reducing PM, and the above-mentioned criteria air pollutants. In most cases, the CAAQS are more stringent than the NAAQS. Differences in the standards are generally explained by the health effects studies considered during the standard-setting process and the interpretation of the studies. In addition, the CAAQS incorporate a margin of safety to protect sensitive individuals.

The CCAA requires that all local air districts in the state endeavor to attain and maintain the CAAQS by the earliest date practical. The CCAA specifies that local air districts should focus particular attention on reducing the emissions from transportation and areawide emission sources. It provides air districts with the authority to regulate indirect sources and to establish traffic control measures.

Toxic Air Contaminants

TACs are defined as airborne pollutants that "may cause or contribute to an increase in mortality or in serious illness, or which may pose a present or potential hazard to human health" per the *California Health and Safety Code* §39655 (PCAPCD 2017a). TACs in California are regulated primarily through the Tanner Air Toxics Act (Assembly Bill [AB] 1807, Chapter 1047, Statutes of 1983) and the Air Toxics Hot Spots Information and Assessment Act of 1987 (AB 2588, Chapter 1252, Statutes of 1987). AB 1807 sets forth a

formal procedure for CARB to designate substances as TACs. Research, public participation, and scientific peer review are required before CARB can designate a substance as a TAC. To date, CARB has identified more than 21 TACs and adopted EPA's list of HAPs as TACs. Most recently, PM exhaust from diesel engines (diesel PM) was added to CARB's list of TACs.

After a TAC is identified, CARB then adopts airborne toxics control measures for sources that emit that particular TAC. If a safe threshold exists for a substance at which there is no toxic effect, the control measure must reduce exposure to below that threshold. If no safe threshold exists, the measure must incorporate Best Available Control Technology (BACT) or Best Available Control Technology for Toxics (TBACT) to minimize emissions.

The Hot Spots Act requires that existing facilities that emit toxic substances above a specified level prepare an inventory of toxic emissions, prepare a risk assessment if emissions are significant, notify the public of significant risk levels, and prepare and implement risk reduction measures.

CARB has adopted diesel exhaust control measures and more stringent emissions standards for various transportation-related mobile sources of emissions, including heavy-duty trucks and buses, and off-road diesel equipment (for example, tractors, dozers, generators). Over time, the replacement of older vehicles will result in a vehicle fleet that produces substantially lower levels of TACs than under current conditions. Mobile-source emissions of TACs (for example, benzene, 1-3-butadiene, diesel PM) have been reduced significantly over the last decade and will be reduced further in California through a progression of regulatory measures (for example, Low Emission Vehicle/Clean Fuels and Phase 2 reformulated gasoline regulations) and control technologies. With implementation of CARB's Risk Reduction Plan, it is expected that diesel PM concentrations will be 85 percent less in 2020 in comparison to year 2000 (Placer County 2018). Adopted regulations are also expected to continue to reduce formaldehyde emissions emitted by cars and light-duty trucks. As emissions are reduced, it is expected that risks associated with exposure to the emissions will also be reduced.

Sierra Club v. County of Fresno

In December 2018, the California Supreme Court issued its decision in *Sierra Club v. County of Fresno* (2018) (6 Cal. 5th 502). The case reviewed the regional air quality analysis contained in the EIR for the proposed Friant Ranch development. The project is in unincorporated Fresno County within the San Joaquin Valley Air Basin, an area currently designated as nonattainment for multiple NAAQS and CAAQS, including O_3 and PM. The Court ruled that the air quality analysis failed to adequately disclose the nature and magnitude of long-term air quality impacts from project-related emissions of criteria pollutants and precursors "in sufficient detail to enable those who did not participate in its preparation to understand and consider meaningfully the issues the proposed project raises." The Court noted that the air quality analysis did not provide a discussion of the foreseeable adverse effects of project-generated emissions on Fresno County's likelihood of exceeding the NAAQS and CAAQS for criteria air pollutants, nor did it explain why it was not "scientifically possible" to determine such a connection. The Court concluded that "because the EIR as written makes it impossible for the public to translate the bare numbers provided into adverse health impacts or to understand why such translation is not possible at this time," the EIR's discussion of air quality impacts was inadequate (Placer County 2019).

Odorous Compounds.

The California Department of Resources Recycling and Recovery (CalRecycle) oversees programs to manage solid wastes, promote recycling, and reduce the amount of waste sent to landfills. The CalRecycle minimum standards for odor are codified in the CCR: "All handling activities shall be conducted in a

manner that minimizes vectors, odor impacts, litter, hazards, nuisances, and noise impacts; and minimizes human contact with, inhalation, ingestion, and transportation of dust, particulates, and pathogenic organisms" (14 CCR 17867(a)(2)). These standards apply to waste collection, transport, processing, and disposal.

Requirements for statewide organic waste diversion from disposal have been increased with passage of SB 1383 (Chapter 395, Statutes of 2016). SB 1383 establishes statewide goals to reduce California's disposal of organic waste 50 percent by 2020 and 75 percent by 2025. SB 1383 regulations are codified in Chapter 12 of Title 14 CCR, Division 7 and amended portions of Title 14 CCR and Title 27 CCR. The regulations establish program and policy requirements for waste generators and facilities to support the statewide goals of SB 1383. Statewide implementation of these regulations will result in increasing levels of food waste requiring management at composting or other organics management facilities.

Information on the CalRecycle web site indicates that composting may generate odorous compounds including ammonia, hydrogen sulfide, VOCs, and mercaptans (which may smell like rotten eggs). VOCs are a class of more than 1,000 chemicals with greatly varying degrees of reactivity and toxicity. Some VOCs may be considered desirable, such as those that give off the scent of lemons, pine, or an expensive perfume. Others, like cadaverine, are offensive (CalRecycle 2021).

The level of emissions released during composting appears to be highly variable, and is influenced by feedstocks, management practices, and even climate. For example, an ammonia smell may indicate that a compost pile has too much nitrogen for the carbon present, or that the carbon chips are too large and therefore are not available for the biological processing with the nitrogen. Hydrogen sulfide and mercaptans may indicate an anaerobic condition that may have resulted from too much water or not enough air spaces (CalRecycle 2020, 2021).

State regulations to minimize odors associated with compostable materials handling operations and facilities are codified in CCR Title 14 Section 17863.4, requiring that compostable material handling operations and facilities prepare, implement, and maintain a site-specific OIMP to minimize odors. The OIMP provides guidance to operations personnel including the following:

- Odor monitoring and data collection protocol for onsite odor sources
- A description of meteorological conditions affecting mitigation of odors or transport of odor-causing material offsite
- A complaint response and recordkeeping protocol
- A description of design considerations and ranges of optimal operations to minimize odor
- A description of operating procedures to minimize odor

6.3.3 Local

Placer County's Health and Human Services Department – Environmental Health Division is the designated Local Enforcement Agency for issuing a Solid Waste Facility Permit and is also the designated Certified Unified Program Agency for Placer County coordinating administrative activities related to permits, inspections, and enforcement.

PCAPCD is responsible for implementing local air pollution control programs to improve air quality in Placer County and has local air quality jurisdiction over the proposed project area.

Criteria Air Pollutants

PCAPCD attains and maintains air quality conditions in Placer County through a comprehensive program of planning, regulation, enforcement, technical innovation, and promotion of the understanding of air quality issues. PCAPCD oversees control of air pollution emissions including "criteria air pollutants" and "toxic air pollutants" from direct sources (such as factories) and indirect sources (such as land use projects) to improve air quality within Placer County. The clean air strategy of PCAPCD includes preparing plans for the attainment of ambient air quality standards, developing and enforcing rules and regulations concerning sources of air pollution, issuing permits for stationary sources of air pollution, and adopting policies and programs to manage emissions. PCAPCD also inspects stationary sources of air pollution and responds to citizen complaints, monitors ambient air quality and meteorological conditions, and implements programs and regulations required by the CAA and CCAA and amendments (Placer County 2018).

As described previously, portions of Placer County are within the Sacramento federal nonattainment area for O_3 and $PM_{2.5}$. As a result, the PCAPCD has worked with the other local air districts within the Sacramento area to develop a regional air quality management plan to describe and demonstrate how Placer County, as well as the rest of the Sacramento nonattainment area, would attain the 2008 federal 8-hour ozone standard (75 parts per billion [ppb]) by the proposed attainment deadline (CARB 2018). In accordance with the requirements of the CAA, the PCAPCD and other air districts developed the *Sacramento Regional 2008 NAAQS 8-Hour Ozone Attainment and Reasonable Further Progress Plan* to address attainment of the 8-hour ozone NAAQS by 2024. The plan demonstrates how existing and new control strategies will provide the necessary future emission reductions to meet the CAA requirements for reasonable further progress and attainment of the ozone NAAQS. It provides an updated emission inventory, sets new motor vehicle emission budgets for conformity purposes, and documents the implementation of control measures (El Dorado County Air Quality Management District et al. 2017).

In 2015, EPA promulgated a new 8-hour ozone NAAQS of 70 ppb, so future Sacramento area attainment planning efforts will need to address the more stringent NAAQS. According to their *2021 Board of Directors Handbook*, the PCAPCD has committed to work with the Sacramento Federal Nonattainment Area air districts to implement the plan for the 2008 federal 8-hour ozone standard (0.075 ppm) and to begin preparation of the regional ozone SIP for the 2015 standard (PCAPCD 2021a). The Sacramento region does not anticipate attainment of the 2015 8-hour ozone NAAQS by the required date for a "moderate" nonattainment classification, so they have filed a request that the area be reclassified from moderate to "serious" nonattainment. As a result, the final attainment deadline for the 2015 ozone standard is pending EPA's approval. If the reclassification request is approved, the regional ozone SIP for the 2015 ozone standard will be due in August 2022 (PCAPCD 2021a).

In 2009, the Sacramento $PM_{2.5}$ planning region was classified as nonattainment for the 2006 24-hour $PM_{2.5}$ NAAQS of 35 micrograms per cubic meter ($\mu g/m^3$). The local air districts in the Sacramento area prepared the *Proposed $PM_{2.5}$ Implementation/Maintenance Plan and Redesignation Request for the Sacramento $PM_{2.5}$ Nonattainment Area* to address how the region attained and would continue to attain the 2006 $PM_{2.5}$ NAAQS (El Dorado County Air Quality Management District et al. 2013). The region attained the standard based on 2009–2011 monitoring data but postponed the submittal of the plan because of high concentrations in 2012 that caused exceedances. On May 10, 2017, EPA found that the area attained the 2006 24-hour $PM_{2.5}$ NAAQS by the attainment date of December 31, 2015 (82 *Federal Register* [FR] 89). In order for the area to be redesignated as attainment, additional criteria in CAA Section 107(d)(3) need to be met. These criteria include EPA approval of a state plan demonstrating maintenance of the 2006 $PM_{2.5}$ NAAQS for 10 years following redesignation (82 FR 89).

The CCAA requires air districts to assess the progress made toward attaining the state air quality standards every three years. The "Triennial Reports" prepared by the air districts describe the historical trends in ambient air quality levels, provide updates to the emission inventories, and evaluate the implementation of stationary and mobile-source control measures in reducing air pollutant emissions. The PCAPCD has prepared several triennial progress reports that build upon the air quality plans in the area (Placer County 2018).

PCAPCD actively participates as a commenting agency under CEQA to assist lead agencies with environmental review when a land use project would result in air pollutant emissions within Placer County (PCAPCD 2017a, 2021). PCAPCD published the CEQA Handbook in 2017 to describe their process for review of the CEQA documents prepared for land use projects in Placer County. The Handbook contains criteria used by PCAPCD to recommend when an air quality analysis is needed, what types of analysis should be performed, and what kinds of mitigation measures should be identified to reduce overall air quality impacts from proposed land use projects. These criteria include specific methods for calculating emissions, recommended thresholds for evaluating the level of significance, and mitigation strategies for mitigating a project's related air quality impacts (PCAPCD 2017a).

All projects in Placer County are subject to PCAPCD's adopted rules and regulations. Specific rules applicable to implementation of the project under Plan Concept 1 and Plan Concept 2 may include but are not limited to the following:

- PCAPCD Rule 202 – Visible Emissions. A person shall not discharge into the atmosphere from any single source of emissions whatsoever any air contaminant for a period or periods aggregating more than three (3) minutes in any one (1) hour which is: A. As dark or darker in shade as that designated as No. 1 on the Ringelmann Chart.
- PCAPCD Rule 205 – Nuisance. A person shall not discharge from any source whatsoever such quantities of air contaminants or other material which cause injury, detriment, nuisance or annoyance to any considerable number of persons, or to the public, or which endanger the comfort, repose, health or safety of any such persons, or the public, or which cause to have a natural tendency to cause injury or damage to business or property. This rule applies to odors.
- PCAPCD Rule 207 – Particulate Matter. A person shall not release or discharge into the atmosphere from any source or single processing unit, exclusive of sources emitting combustion contaminants only, particulate matter emissions in excess of: 0.1 grains per cubic foot of gas at District standard conditions.
- PCAPCD Rule 210 – Specific Contaminants. A person shall not discharge into the atmosphere from any source emissions exceeding 0.2 percent by volume in concentration of sulfur compounds, calculated as sulfur dioxide (SO_2), at point of discharge. A person shall not discharge into the atmosphere from any source combustion contaminants (particulate matter) exceeding 0.1 grains per dry standard cubic foot at 12 percent carbon dioxide (CO_2) at standard conditions.
- PCAPCD Rule 211 – Process Weight. A person shall not discharge into the atmosphere in any one hour from any source whatsoever solid particulate matter in excess of the listed amounts.
- PCAPCD Rule 217 – Cutback and Emulsified Asphalt Paving Materials: A person shall not discharge to the atmosphere VOCs caused by the use or manufacture of Cutback or Emulsified asphalts for paving, road construction or road maintenance, unless such manufacture or use complies with the provisions of this Rule.
- PCAPCD Rule 218 – Application of Architectural Coatings. This rule limits the quantity of VOCs in architectural coatings used in PCAPCD's jurisdiction. Subsection 301 lists VOC content limits for a variety of architectural coatings.

- PCAPCD Rule 228 – Fugitive Dust. This rule addresses fugitive dust generated by construction and grading activities and outlines BMPs to prevent, reduce, and mitigate fugitive dust emissions. Good practices to minimize dust generation are required to prevent dust plumes and dust from leaving the property and creating a public nuisance. The minimum dust control requirements of Rule 228 must be met regardless of whether a dust control plan is required.
- PCAPCD Rule 242 – Stationary Internal Combustion Engines. Establishes concentration limits for the emission of NOx and CO from stationary internal combustion engines. This rule applies to any stationary internal combustion engine rated at more than 50 brake horsepower and using any gaseous fuel or liquid fuel, including liquid petroleum gas, gasoline or diesel fuel. This rule shall not apply to low-use engines used less than 200 hours per year or emergency generators operated for maintenance less than 100 hours per year.
- PCAPCD Rule 408 – Source Record Keeping and Reporting. The owner or operator of any stationary source, shall, upon notification from the PCAPCD, maintain records of the nature and amounts of emissions from such sources and any other information as may be deemed necessary by the PCAPCD to determine whether such source is in compliance with applicable emission limitations or other control measures. The Air Pollution Control Officer may require that such records be certified by a professional engineer, registered in the State of California. Such studies shall be at the expense of the person causing the emissions.
- PCAPCD Rule 501 – General Permit Requirements. Any person operating an article, machine, equipment, or other contrivance, the use of which may cause, eliminate, reduce, or control the issuance of air contaminants, shall first obtain a written permit from the Air Pollution Control Officer. Stationary sources subject to the requirements of Rule 507, Federal Operating Permit Program, must also obtain a Title V permit pursuant to the requirements and procedures of that rule.
- PCAPCD Regulation 5 – Permits. The series of rules in Regulation 5 provide procedures for the review of new sources of air pollution and modification and operation of existing sources through the issuance of permits, including the following:
  - Rule 501, General Permit Requirements
  - Rule 502, New Source Review
  - Rule 507, Federal Operating Permit Program
  - Rule 514, Federal Major Modifications
  - Rule 518, Prevention of Significant Deterioration (PSD) Permit Program

PCAPCD Regulation 6 – Fees. Rules governing payment of fees by emission sources, including the following:

- Rule 601, Permit Fees
- Rule 602, Hearing Board Fees
- Rule 604, Source Test Observation and Report Evaluation
- Rule 610, Air Toxics "Hot Spots" Fees

In addition to their rules and regulations, PCAPCD establishes policies and guidelines for air quality management. For example, the PCAPCD Policy Regarding Land Use Air Quality Mitigation Funds was adopted on April 17, 2001, and amended on December 11, 2008. The guidelines for the Air Quality Mitigation Fund are listed below (PCAPCD 2008):

- PCAPCD considers permanent onsite air quality mitigation the preferred method of reducing a project's emissions. However, if sufficient measures cannot be implemented onsite to adequately reduce a project's emissions, then payment into PCAPCD's Off-Site Air Quality Mitigation Fund is preferred to offset air quality impacts. Typically, funds are used to purchase cleaner on- and off-road vehicles for county projects or cleaner buses for schools.

- The amount of the payment for the criteria pollutants into the Fund is calculated based on the total amount of ROG/NOx emissions exceeding the daily thresholds for a single ozone season (that is, May through October).
- Apply a cost-effectiveness factor [$18,790 per ton at the time of preparing this EIR (PCAPCD 2021b)] to calculate the funds required to achieve the needed reduction. The cost-effectiveness factor may be adjusted by the California Consumer Price Index (CPI), starting in 2018.
- An emission reduction project is eligible for mitigation funding only if source of the emissions reduction (public or private project) is not required by existing state or federal law to reduce emissions to the levels proposed by the project.
- The source of the emissions reduction should be located within Placer County, specifically within the SVAB, primarily within the nonattainment area classified by the NAAQS.
- For criteria air pollutants of localized concern (PM, CO), it is preferred that the location of the emissions reduction be as close as possible to the project that is to be mitigated.
- The type of emissions to be reduced are of the same type as those emissions for which the Air Quality Mitigation Fee was paid.
- Examples of the types of emissions reduction projects that may be qualifying:
  - Provide monetary incentives to homeowners to replace high-polluting non-EPA certified woodstoves with new EPA certified low-emission wood, pellet or gas burning appliances.
  - Provide monetary incentives to local transit operators, public and private owners of heavy-duty diesel on-road trucks and off-road equipment to replace older, high-emission diesel engines with new, low-emission diesel or compressed/liquefied natural gas engines.
  - Use as matching funds to obtain "Carl Moyer" funding for public and private air quality improvement projects.
  - Provide monetary incentives to the agricultural industry to replace high-polluting, diesel-powered water pumps with new cleaner burning diesel or natural gas-powered agricultural pumps.
  - Alternative project designs or locations that conserve energy and water, projects that reduce VMT by fossil-fueled vehicles, projects that contribute to established regional or programmatic mitigation strategies, and projects that sequester carbon to offset the emissions generating from the land use development project.

Toxic Air Contaminants

At the local level, PCAPCD may adopt and enforce CARB's airborne toxic control measures. Under PCAPCD Rule 501 ("Permit Requirements"), PCAPCD Rule 502 ("New Source Review"), PCAPCD Rule 507 ("Federal Operating Permit"), PCAPCD Rule 513 ("Toxics New Source Review"), all stationary sources that possess the potential to emit TACs are required to obtain permits from PCAPCD. PCAPCD may grant permits to these operations if they are constructed and operated in accordance with applicable regulations, including new source review standards and air toxics control measures. PCAPCD limits emissions and public exposure to TACs through a number of programs.

Sources that require a permit are analyzed by PCAPCD (for example, HRA) based on their potential to emit TACs that would expose receptors to substantial health risk. If it is determined that a source would emit TACs in excess of PCAPCD's standard of significance for TACs, then the source would have to implement BACT for TACs to reduce emissions. If a source cannot reduce the risk below the standard of significance even after BACT has been implemented, PCAPCD indicates that they will deny issuing a permit to the

source. This helps to prevent new problems and reduces emissions from existing older sources by requiring them to apply new TAC-reduction technology when being retrofitted.

Odorous Compounds

As described previously, all projects in Placer County are subject to PCAPCD's adopted rules and regulations. Specific rules applicable to odors from implementation of the project under Plan Concept 1 and Plan Concept 2 include the prohibitions in PCAPCD Rule 205 – Nuisance, described earlier in the discussion of local regulations.

Placer County General Plan

The WPWMA is a Joint Powers Authority (JPA) composed of Placer County and the cities of Lincoln, Rocklin, and Roseville to own and operate a regional recycling facility and sanitary landfill. As a JPA, the WPWMA considers local regulations and consults with local agencies, but County and city regulations, goals, and policies are not applicable, because the County and cities do not have jurisdiction over the proposed project. Accordingly, the following discussion of local goals and policies from the Placer County General Plan is provided for informational purposes only.

The relevant goals and policies from the Placer County General Plan that pertain to air quality and odors are presented in the following (Placer County 2013). Again, the WPWMA is an independent government agency that is not required to comply with the County's goals or policies. Goal 4.G is to ensure safe waste disposal and recycling. Goal 6.F is to protect and improve air quality in Placer County, and Goal 6.G is to integrate air quality planning with the land use and transportation planning process. The policies from the General Plan under these goals include the following:

GOAL 4.G: To ensure the safe and efficient disposal or recycling of solid waste generated in Placer County.

- Policy 4.G.6. The County shall ensure that landfills and transfer stations are buffered from incompatible development.
- Policy 4.G.11. When considering land use changes in the vicinity of a landfill operation, the County shall consider the landfill as the dominant land use in the area. In order to protect these facilities from incompatible encroachment, new residential land uses shall be separated from the property lines of active and future landfill sites by a buffer of one mile.[21] Such buffers do not apply to closed landfills or solid waste transfer stations. Other uses will be required to provide buffers as described in Table 1-5. The intent of this policy is to prohibit the creation of new parcels for residential use within one mile of the landfill; not to prohibit construction of a residence on an existing legal building site within this area.

GOAL 6.F: To protect and improve air quality in Placer County.

- Policy 6.F.5: The County shall encourage project proponents to consult early in the planning process with the County regarding the applicability of Countywide indirect and areawide source programs and transportation control measures programs. Project review shall also address energy-efficient building and site designs and proper storage, use, and disposal of hazardous materials.

[21] The SAP/PRSP FEIR describes an amendment to the buffer requirements in this policy, "The proposed project includes an amendment to the County General Plan Policy 4.G.11, which would reduce the buffer around the WRSL from 1 mile (5,280 feet) to 2,000 feet for residential development with the approval of a specific plan, master plan, or development agreement…" (Placer County 2019). The SAP/PRSP FEIR, this General Plan amendment, and the PRSP and development agreement were approved by the Placer County Board of Supervisors on December 10, 2019. In its analysis of future air quality conditions in Chapter 19, the Consultant Team has conservatively assumed the potential for future residential development to occur up to the 2,000-foot (reduced) buffer area around the project site.

- Policy 6.F.6: The County shall require project-level environmental review to include identification of potential air quality impacts and designation of design and other appropriate mitigation measures or offset fees to reduce impacts. The County shall dedicate staff to work with project proponents and other agencies in identifying, ensuring the implementation of, and monitoring the success of mitigation measures.
- Policy 6.F.7: The County shall encourage development to be located and designed to minimize direct and indirect air pollutants.
- Policy 6.F.8: The County shall submit development proposals to the PCAPCD for review and comment in compliance with CEQA prior to consideration by the appropriate decision-making body.
- Policy 6.F.9: In reviewing project applications, the County shall consider alternatives or amendments that reduce emissions of air pollutants.
- Policy 6.F.10: The County may require new development projects to submit an air quality analysis for review and approval. Based on this analysis, the County shall require appropriate mitigation measures consistent with PCAPCD's 1991 Air Quality Attainment Plan (or 2017 Draft).
- Policy 6.F.11: The County shall apply the buffer standards described in Part 1 of this Policy Document [Land Use/Circulation Diagrams and Standards] and meteorological analyses to provide separation between possible emission/nuisance sources (such as industrial and commercial uses) and residential uses.

GOAL 6.G: To integrate air quality planning with the land use and transportation planning process.

- Policy 6.G.1: The County shall require new development to be planned to result in smooth flowing traffic conditions for major roadways. This includes traffic signals and traffic signal coordination, parallel roadways, and intra- and inter-neighborhood connections where significant reductions in overall emissions can be achieved.
- Policy 6.G.2: The County shall continue and, where appropriate, expand the use of synchronized traffic signals on roadways susceptible to emissions improvement through approach control.
- Policy 6.G.3: The County shall encourage the use of alternative modes of transportation by incorporating public transit, bicycle, and pedestrian modes in County transportation planning and by requiring new development to provide adequate pedestrian and bikeway facilities.
- Policy 6.G.4: The County shall consider instituting disincentives for single-occupant vehicle trips, including limitations in parking supply in areas where alternative transportation modes are available and other measures identified by the PCAPCD and incorporated into regional plans.
- Policy 6.G.5: The County shall endeavor to secure adequate funding for transit services so that transit is a viable transportation alternative. New development shall pay its fair share of the cost of transit equipment and facilities required to serve new projects.
- Policy 6.G.6: The County shall require large new developments to dedicate land for and construct appropriate improvements for park-and-ride lots, if suitably located.
- Policy 6.G.7: The County shall require stationary-source projects that generate significant amounts of air pollutants to incorporate air quality mitigation in their design.

Sunset Area Plan

As indicated previously, the approved SAP/PRSP FEIR (Placer County 2019) included an amendment to the County General Plan Policy 4.G.11, to reduce the buffer around the WRSL from 1 mile (5,280 feet) to 2,000 feet for residential development with the approval of a specific plan, master plan, or development

agreement. The relevant goals and policies from the SAP that pertain to air quality and odors are presented in this section (Placer County 2018, 2019). These policies are intended to supplement the goals and policies of the Placer County General Plan. The County would require, as conditions of approval, that applicants for future projects under the SAP implement these policies. As stated previously in relation to Placer County General Plan policies, the WPWMA is an independent government agency that is not required to comply with the SAP policies established by the County.

Proposed goals, objectives, and policies in the Natural Resources section of the SAP address air quality and odors, including the following:

- GOAL NR-5: To protect and improve air quality in the Sunset Area, primarily through support and implementation of PCAPCD programs and guidance for CEQA review, submittal of an Air Quality Analysis and Mitigation Plan for projects with significant impacts, submittal of a Construction Emission/Dust Control Plan for projects that will disturb more than 1 acre, BACT for construction equipment exhaust, compliance with state and local emission reduction requirements, establishment of buffers for air pollutant and odor (more detail below), chlorofluorocarbon recovery, Cool Community strategies, and particulate matter control.
  - Policy NR-5.7: Buffers for Air Pollution and Odor. The County, in coordination with the PCAPCD, shall require the establishment of buffers and/or other appropriate mitigation on a project-by-project basis to provide for protection of sensitive receptors from sources of air pollution or odor.
- GOAL NR-7: To integrate air quality improvement with the land use and transportation planning process, primarily through policies to support reduction of vehicle emissions, projects that encourage alternative transportation modes, transit funding, transportation control measures, alternative fuel vehicle infrastructure, and low-emission fleet vehicles.

6.4 Impact Analysis and Mitigation Measures

The air quality analysis, impacts, and mitigation for some of the planned land development in the proposed project area has been generally described in prior studies for the SAP and PCCP EIRs (Placer County 2018, 2019, 2020). Some parts of the following discussion of the thresholds of significance, air quality impact analysis, results, and mitigation for the proposed project have been adapted from these prior EIRs, with updates of pertinent information for the proposed project.

6.4.1 Thresholds of Significance

The thresholds of significance for assessing impacts come from the CEQA Environmental Checklist, located in Appendix G of the State CEQA Guidelines. For air quality, the CEQA Checklist asks whether the project would do the following:

- Conflict with or obstruct implementation of the applicable air quality plan
- Result in a cumulatively considerable net increase of any criteria pollutant for which the project region is nonattainment under an applicable federal or state ambient air quality standard (that is, NAAQS or CAAQS)
- Expose sensitive receptors to substantial pollutant concentrations (including TACs)
- Result in other emissions (such as those leading to odors) adversely affecting a substantial number of people

As stated in Appendix G of the State CEQA Guidelines, the significance criteria established by the applicable air district, in this instance PCAPCD, may be relied upon to make the above determinations.

PCAPCD has developed guidance for use by lead agencies when preparing CEQA documents (PCAPCD 2017a). PCAPCD has adopted CEQA thresholds of significance for evaluating impacts to air quality. CEQA-related air quality thresholds of significance are tied to achieving or maintaining attainment designations with the NAAQS and CAAQS, which are scientifically substantiated, numerical concentrations of criteria air pollutants considered to be protective of human health. PCAPCD significance criteria are substantially similar to those of Appendix G, but with some additional specificity.

PCAPCD identified numerical thresholds for project-generated emissions of criteria air pollutants and precursors that would determine whether a project's discrete emissions would result in a cumulative, regional contribution (that is, significant) to the baseline nonattainment status of the air basin. PCAPCD's quantitative thresholds of significance for project-level CEQA evaluation are used to determine the extent to which a project's emissions of criteria air pollutants and precursors would contribute to regional degradation of ambient air quality within the air basin. In its CEQA Thresholds of Significance Justification Report, PCAPCD indicates that development of its mass emissions thresholds considered the following (PCAPCD 2016):

- The current emission offset requirement required by PCAPCD's new source review rule
- The regional goal to attain the NAAQS and CAAQS
- The historical CEQA projects reviewed by PCAPCD from 2003 to 2015
- The CEQA significance thresholds adopted by other air districts in the Sacramento Area

As a nonattainment area under the NAAQS and CAAQS, PCAPCD must prepare a SIP, which serves as a comprehensive plan that describes how state and local measures will attain air quality standards. Within the SIP, PCAPCD develops an emissions inventory for nonattainment areas to determine to what extent various sources within the area are responsible for emissions of criteria pollutants and ozone precursors. Baseline emissions are established, and a trajectory to attainment based on expected growth rate of population, housing, industrial/commercial activity, energy use, and motor vehicle travel is developed (PCAPCD 2016).

PCAPCD's mass emissions CEQA thresholds represent a portion of land use emissions budgeted for in the SIP. Based on the above considerations, PCAPCD has determined that projects that emit criteria air pollutants and ozone precursors below these thresholds would not impede PCAPCD's capacity to attain the NAAQS and CAAQS under the emissions inventory found in the SIP. As discussed in Section 6.2, Environmental Setting, and Section 6.3, Regulatory Setting, the NAAQS and CAAQS were developed in consideration of extensive scientific and economic review and represent concentrations of criteria air pollutants that provide public health protection, including protecting the health of sensitive populations such as people with asthma, children, and the elderly.

For the purpose of this analysis, the following thresholds of significance are used to determine whether project-generated emissions would produce a considerable level of air pollutants that would impede PCAPCD's capacity to attain the NAAQS and CAAQS at the regional level or result in localized air quality impacts (PCAPCD 2017a, Placer County 2018). For the reasons discussed above, if the project would generate emissions below these thresholds, the project's contribution of air pollutants would not inhibit PCAPCD achieving attainment under the NAAQS and CAAQS, and the potential for an adverse human health impact would be avoided. As identified by PCAPCD, an air quality impact is considered significant if implementation of the project would result in the following:

- Construction-generated criteria air pollutant or precursor emissions that would exceed the PCAPCD-recommended threshold of 82 pounds per day (lb/day) for ROG, NOx, or PM_{10} (PCAPCD 2017a), or operation-related (regional) emissions of ROG or NOx that exceed a mass emission threshold of 55 lb/day, and emissions of PM_{10} that exceed 82 lb/day. While PCAPCD has not established a mass

emission threshold for $PM_{2.5}$, which is a subset of PM_{10}, this analysis considers project-generated emissions of $PM_{2.5}$ to be significant if PCAPCD's thresholds for PM_{10} are exceeded (PCAPCD 2017a).

- Long-term operational local mobile-source CO emissions that would result in an exceedance of the NAAQS and CAAQS for CO (PCAPCD 2017a)
- Exposure of sensitive receptors to TAC emissions, from a single source, that would exceed 10 in 1 million for the carcinogenic risk (that is, the risk of contracting cancer) or a noncarcinogenic Hazard Index of 1 for the maximally exposed individual (PCAPCD 2017a)
- Creation of an objectionable odor affecting a substantial number of people (PCAPCD 2017a)

PCAPCD recommends that CO dispersion modeling be conducted if a project would result in emissions exceeding 550 lb/day of CO from vehicle operation[22] and if any roadway intersections affected by project traffic meet either of the following criteria:

- A traffic study for the project indicates that the peak-hour level of service (LOS) on one or more streets or at one or more intersections (signalized or unsignalized) in the project vicinity would be degraded from an acceptable LOS (for example, A, B, C, or D) to an unacceptable LOS (for example, E or F).
- A traffic study indicates that the project would substantially worsen an already unacceptable peak-hour LOS on one or more streets or at one or more intersections in the project vicinity. "Substantially worsen" includes situations in which a delay would increase by 10 seconds or more when project-generated traffic is included.

No specific odor standards or thresholds have been adopted by the State of California, Placer County, or PCAPCD. PCAPCD has no rules or standards directly related to odor emissions other than its nuisance rule, Rule 205. Actions taken by PCAPCD related to odors are based on responses to citizen complaints to local governments and the air district. The determination of whether implementation of the proposed project would create objectionable odors affecting a substantial number of people is based on a qualitative evaluation of the numbers and proximity of receptors to sources of odors, the odor complaint history for those sources, direct and indirect contribution of the project to future odors, and the odor-abatement and mitigation measures that would be implemented.

Potential odor impacts are evaluated in accordance with the *CEQA Air Quality Handbook*, which indicates that potential odor impacts should be acknowledged and discussed so that mitigation measures may be identified (PCAPCD 2017a). The Handbook (PCAPCD 2017a) indicates that one of the most important factors influencing odor impacts is the distance between the odor source and potential receptors (that is, the buffer zone or setback). A greater buffer zone between the source and receptors results in a lower odor impact. The PCAPCD guidance lists a recommended odor screening distance of 1 mile for sanitary landfills and 2 miles for composting facilities. While not the only factor affecting potential odor impacts, the size of the proposed project buffer zone is compared to the recommended odor screening distances as part of the odor impact analysis. The odor impact significance determination is made in consideration of recommended parameters, such as buffer distance, wind conditions and prevailing wind direction, and the facility's odor complaint history.

6.4.2 Methods and Approach

Implementation of the proposed Plan Concepts could result in direct, indirect, and cumulative impacts on air quality and odors. Direct impacts are those effects of a project that occur at the same time and place as

[22] Projects emitting less than 550 lb/day of CO from vehicle operation are not anticipated to exceed the NAAQS and CAAQS for CO (PCAPCD 2017a).

project implementation, such as emission increases from project construction and operations. Indirect impacts are those effects that occur either removed by time or by distance from project activities, but are reasonably foreseeable, such as human health effects that could result from changes in ambient air quality due to project emissions. Direct and indirect impacts can be permanent or temporary. Cumulative impacts are those incremental effects of a project that, even if less than significant themselves, could in combination with the effects of other projects significantly affect regional air quality or odors.

The methods and criteria used to assess potential impacts on air quality have been described in Section 6.1, Methodology, and Section 6.4.1, Thresholds of Significance. The Methodology for Air Quality and Greenhouse Gas Impact Analysis, presented in Appendix C.1, provides additional details regarding the PCAPCD-approved methods used to quantify and analyze potential air quality and health impacts associated with emissions from project-related construction and operations, fugitive emissions, air toxics, GHGs, and odors. Emission calculations quantifying criteria pollutant, TAC, and GHG emissions estimates for the proposed project are presented in Appendix C.2. LandGEM modeling results showing predicted annual landfill gas generation values for the proposed project are included in Appendix C.3. The Air Dispersion and Health Risk Assessment Modeling Protocol detailing the methods used to complete the HRA is provided in Appendix C.4. The Health Risk Assessment Modeling Report, which contains the results of the HRA, is presented in Appendix C.5. The impact analysis identifies the potential impacts of the project, including cumulative impacts, and identifies mitigation measures, when available, to reduce the level of impact.

6.4.3 Impacts and Mitigation Measures

This section describes the air quality effects associated with the two Plan Concepts, mitigation measures for identified significant impacts, and the level of impact significance following implementation of the identified mitigations.

IMPACT 6-1	**Consistency with Applicable Air Quality Plans.** PCAPCD and other air districts in the SVAB develop and implement air quality plans to enable the region to achieve attainment of the federal and state standards (that is, NAAQS and CAAQS) for ozone, $PM_{2.5}$, and PM_{10}, and maintain compliance with standards. These air quality plans are based on an inventory of existing emission sources as well as projections about future development in Placer County and the SVAB. The SAP DEIR/FEIR concluded that the levels of growth associated with the SAP project, including development of WPWMA solid waste elements, supporting elements, and land use changes similar to those proposed as complementary and programmatic elements under the proposed project, were accounted for in the projections of emissions-generating activity used in the air quality planning documents. However, the emissions estimates prepared to support this analysis of the proposed project indicate that the construction and operation of the solid waste elements, complementary and programmatic elements, and supporting elements under the proposed project would have the potential to exceed PCAPCD's numerical thresholds of significance for emissions of the ozone precursor NOx, PM_{10}, and $PM_{2.5}$. These emissions increases could contribute to the existing nonattainment status of Placer County and the SVAB region with respect to the NAAQS for ozone and $PM_{2.5}$, and the CAAQS for ozone and PM_{10}, and could impede air quality planning efforts to bring the air basin into attainment of the health-protective NAAQS and CAAQS. For these reasons, the project would potentially conflict with implementation of the applicable air quality plans. **This impact would be significant**.

Plan Concept 1

PCAPCD is responsible for implementing local air pollution control plans and programs to improve air quality in Placer County. The clean air strategy of PCAPCD includes preparing plans for the attainment of ambient air quality standards, developing and enforcing rules and regulations concerning sources of air pollution, issuing permits for stationary sources of air pollution, and adopting policies and programs to manage emissions (Placer County 2018). As described previously, portions of Placer County are within the Sacramento nonattainment areas for the O_3 and $PM_{2.5}$ NAAQS, and portions of Placer County are also designated by CARB as nonattainment for the O_3 and PM_{10} CAAQS (EPA 2020; CARB 2020). The applicable air quality plans and related reports include the following:

- The PCAPCD and other air districts developed the *Sacramento Regional 2008 NAAQS 8-Hour Ozone Attainment and Reasonable Further Progress Plan* to address attainment of the 8-hour ozone NAAQS by 2024.[23] The plan demonstrates how existing and new regulations and control strategies provide the emission reductions needed to achieve attainment of the ozone NAAQS (El Dorado County Air Quality Management District et al. 2017).
- The Sacramento $PM_{2.5}$ planning region prepared the $PM_{2.5}$ Maintenance Plan and Redesignation Request (2013) to address how the region attained and would continue to attain the 2006 $PM_{2.5}$ NAAQS. In 2017, EPA found that the area attained the 2006 24-hour $PM_{2.5}$ NAAQS. However, additional criteria, including EPA approval of a plan demonstrating maintenance of the 2006 $PM_{2.5}$ NAAQS for 10 years following redesignation, must be met.
- California requires air districts to assess the progress made toward attaining the state air quality standards every 3 years. The "Triennial Reports" prepared by the air districts describe the historical trends in ambient air quality levels, provide updates to the emission inventories, and evaluate the implementation of stationary and mobile-source control measures in reducing air pollutant emissions. The PCAPCD has prepared several triennial progress reports that build upon the air quality plans in the area (Placer County 2018).

In general, a project would not interfere with the applicable air quality plans if it is consistent with the growth assumptions and emission projections used to form the plan(s). Regional emission inventories in air quality plans are based on anticipated growth in population, housing, and other parameters, such as the zoning designations of local general plans. Impacts to regional air quality are managed through policies and regulations of PCAPCD, the Placer County General Plan, and the applicable air quality plans and triennial progress reports. The SAP DEIR/FEIR concluded that the levels of growth associated with implementation of the SAP, which includes development of WPWMA solid waste elements, supporting elements, and land use changes similar to those proposed as complementary and programmatic elements under the proposed project, were accounted for in the growth assumptions and projections of emissions-generating activity used to prepare the applicable air quality plans (Placer County 2018, 2019). However, the emissions estimates prepared to support this analysis of the proposed project, presented in Tables 6-7 and 6-10, indicate that the construction and operation of the solid waste elements, complementary and programmatic elements, and supporting elements under the proposed project would have the potential to exceed PCAPCD's numerical thresholds of significance for emissions of the ozone precursor NOx, PM_{10}, and $PM_{2.5}$. These emissions increases could contribute to the existing nonattainment status of Placer County and the SVAB region with respect to CAAQS and NAAQS for ozone, the CAAQS for PM_{10}, and the NAAQS for $PM_{2.5}$, and could impede air quality planning efforts to bring the air basin into attainment of the health-protective NAAQS and CAAQS.

[23] In 2015, EPA promulgated a new 8-hour ozone NAAQS of 70 ppb, so future Sacramento area attainment planning efforts will address the more stringent NAAQS (PCAPCD 2021a).

The results of this analysis indicate that the project would potentially conflict with implementation of the applicable air quality plans.

Plan Concept 2

As described in Chapter 3, Project Description, the primary differences between Plan Concept 1 and Plan Concept 2 are related to where various facilities would be located on the WPWMA's property and when various facilities would be developed. These differences would not change the conclusions regarding potential to conflict with air quality plans identified for Plan Concept 1. As such, impacts related to consistency with air quality plans for implementation of Plan Concept 2 would be the same as described for Plan Concept 1.

Mitigation Measure 6-1: Consistency with applicable air quality plans.

Through the air permitting process and implementation of BMPs and project design measures in Table 6-1, the WPWMA shall work with the PCAPCD to provide information on the construction and operation of the solid waste elements, complementary and programmatic elements, and supporting elements under the proposed project. The emissions estimates prepared to support this CEQA air quality impact analysis are based on many conservative assumptions (as described in the sections to follow and in Appendix C.2) to allow flexibility as the project elements move forward through planning, design, funding, and implementation. The methodology for this air quality and environmental assessment is consistent with the CEQA Handbook that PCAPCD prepared for evaluation and mitigation of projects in Placer County (PCAPCD 2017a). Current results and conclusions are based on criteria used by PCAPCD to evaluate potential air quality impacts, using PCAPCD-recommended emissions calculation methods, significance thresholds, and mitigation strategies. All projects in Placer County are subject to PCAPCD's adopted rules and regulations. Specific local air quality rules applicable to implementation of the proposed project have been evaluated for applicability to the project elements, and results show that the proposed project elements (solid waste elements, complementary and programmatic elements, and supporting elements) would comply with applicable regulatory and permitting requirements.

Level of Significance after Mitigation.

Ongoing evaluation of construction and operation of the solid waste elements, complementary and programmatic elements, and supporting elements under the proposed project shall be conducted to confirm compliance with BMPs, project design measures, and applicable PCAPCD rules and regulations, as project elements are designed, permitted, and implemented. This impact would be **less than significant** after mitigation.

MRF Operations Design Concept Evaluation.

As indicated previously, PCAPCD implements local air pollution control plans and programs to improve air quality in Placer County, including developing and enforcing rules and regulations concerning sources of air pollution and issuing permits for stationary sources of air pollution (Placer County 2018).

As described in Chapter 3, Project Description, and Chapter 4, Approach, proposed changes to MRF operations could be implemented under either Plan Concept and would potentially result in changes in project-related air emissions and the potential for odor generation, primarily due to accelerated and expanded diversion of organic material, including the organic fraction of the MSW (OFMSW) processed in the MRF, for composting in covered aerated static pile (CASP) composting systems and increased recovery and diversion of recyclables. Changes may also involve addition of an enclosed building for organics receipt and processing. This would reduce the amount and organic content of waste residuals sent to the

landfill. Diversion of more OFMSW from the landfill within a faster timeframe would correspond to a near-term (next 10 years) reduction in LFG production, including reduced emissions of fugitive LFG and associated odors.

Mitigation Measure 6-1 requires the WPWMA to work with the PCAPCD to provide information on the construction and operation of the proposed project through the air permitting process and implementation of BMPs and project design measures in Table 6-1. The emissions estimates prepared to support this CEQA air quality impact analysis are based on many conservative assumptions to allow flexibility as the project elements move forward through planning, design, funding, and implementation.

The PCAPCD recently issued permits to the WPWMA related to ASP composting; however, these permits would likely require updates as the project proceeds. The enclosed building for organics processing, if constructed, would be equipped with an odor control system that may require permitting by the PCAPCD as a stationary source. As the permitting process is undertaken, the WPWMA facility must continue to comply with applicable regulatory and permitting requirements.

Based on this qualitative review, the proposed MRF operations design concept changes would be covered under the current assumptions of this air quality impact analysis, and the conclusions of the project-level analysis related to consistency with applicable air quality plans would not change.

IMPACT 6-2	**Construction Emissions of Criteria Air Pollutants and Ozone Precursors.** Total maximum daily construction emissions estimated for the development of solid waste elements, complementary elements, and supporting elements under the proposed project would exceed PCAPCD's recommended construction significance threshold of 82 lb/day for PM_{10}. Exceedance of the threshold indicates that air quality impacts associated with project-related construction emissions would be significant for PM_{10}. Because $PM_{2.5}$ is a subset of PM_{10}, the significance finding for PM_{10} is conservatively used to indicate potentially significant impacts related to $PM_{2.5}$. Prediction of the specific health consequences associated with the criteria pollutant emissions from an individual project is not feasible at this time. More generally, by exceeding PCAPCD's numerical thresholds, construction-generated emissions of PM_{10} could contribute to the existing nonattainment status of Placer County and the SVAB region with respect to the CAAQS and the NAAQS for PM_{10} and $PM_{2.5}$, respectively. The NAAQS and CAAQS represent concentrations of criteria air pollutants that provide public health protection, including protecting the health of sensitive populations. Because estimated maximum daily construction emissions would exceed the PCAPCD significance threshold, it is reasonably foreseeable that construction-generated PM_{10} emissions could result in increases in ambient air concentrations of PM_{10} and $PM_{2.5}$, and could contribute to higher levels of exposure and health effects for some sensitive receptors. However, it would be misleading and speculative to correlate the estimated PM_{10} emissions to specific health outcomes. Construction of the proposed project could result in a net increase of criteria pollutants (PM_{10} and $PM_{2.5}$) for which the project region is nonattainment under an applicable and health-protective federal or state ambient air quality standard. **This impact would be significant**.

Plan Concept 1

The project's construction-related activities would result in emissions of ROG, NOx, PM_{10}, and $PM_{2.5}$ (a subset of PM_{10}) from construction, upgrade, expansion, and replacement of onsite facilities and construction of new landfill modules. Activities associated with construction of the proposed facilities would include demolition, site preparation, grading, excavation, road construction, foundation construction, and building construction. Construction activities associated with landfill module construction would include excavation, placement of liner materials, and partial module closure. Onsite and offsite construction emissions would fall into three categories: vehicle and construction equipment exhaust, fugitive dust generated by vehicle travel and soil-disturbing activities, and fugitive emissions from paving. During onsite construction, activities would be assumed to occur during daylight hours, 5 days per week, year-round. Although activities may occur 7 days a week at times, concentrating activities to 5 days a week represents a more conservative, worst-case daily emission rate.

Fugitive dust emissions of PM_{10} and $PM_{2.5}$ are associated primarily with travel on paved and unpaved roads, soil management, and grading. Fugitive PM_{10} and $PM_{2.5}$ emissions vary as a function of soil silt content, soil moisture, wind speed, acreage of disturbance, volumes of material managed, and VMT on and off the site. Emissions of ozone precursors, ROG and NOx, are associated primarily with fuel combustion in construction equipment and on-road mobile sources. PM_{10} and $PM_{2.5}$ are also products of combustion, emitted in equipment and vehicle exhaust. Paving results in emissions of ROG.

Typical construction activities would require forklifts, cranes, pickup and fuel trucks, loaders, backhoes, excavators, dozers, tractors, graders, scrapers, pavers, rollers, paving equipment, welders, bore/drill rigs, cement and mortar mixers, off-road haul trucks, generator sets, as well as other diesel-fueled equipment as necessary. On-road haul trucks would be used to deliver equipment, materials, and supplies, and on-road passenger vehicles would be used for worker commute trips.

Construction of project elements under Plan Concept 1 is anticipated to begin in 2024 and continue periodically throughout the analysis period of approximately 30 years. The amount of new construction would vary from year to year and even from day to day, depending on the timing and construction phasing of project elements. There could be little to no new construction during some years and more intensive construction during other years.

The estimated schedule for Plan Concept 1, presented in Appendix C.2, was analyzed to identify "peak" years when anticipated construction activities could result in the highest levels of daily emissions. Potential peak construction years identified for Plan Concept 1 included 2024, 2025, 2028, 2029, and 2033. These years were considered representative of construction of major project elements and multiple construction projects that could occur simultaneously. To conservatively estimate the hypothetical "maximum" daily emissions for each peak year, the highest daily emissions for each project element anticipated to be constructed in that year were summed. Table 6-7 summarizes estimated maximum daily construction emissions estimated for the calendar years when the highest levels of potential construction activity are predicted for Plan Concept 1. The emission values presented in Table 6-7 represent construction of project elements with implementation of BMPs and project design measures from Table 6-1, but no additional mitigation.

As indicated previously, the amount of construction would vary from year to year, as is shown in the variability of maximum daily emissions estimated for the "peak" construction years. The estimated maximums represent worst plausible estimates of simultaneous construction on any given day; emissions are not expected to ever reach these levels. The conservative approach used to estimate maximum daily emissions allows for evaluation of the potential significance of project impacts, while accommodating flexibility in the actual timing and phasing of construction.

In Table 6-7, estimated maximum daily emission rates are compared to the PCAPCD thresholds of significance for construction, and values that indicate an exceedance of the applicable threshold are in bold type. Total estimated daily construction emissions associated with the development of project-related solid waste elements and supporting elements would exceed PCAPCD's recommended construction significance threshold of 82 lb/day for PM_{10} in each of the hypothetical peak construction years, indicating a significant impact for PM_{10}. While PCAPCD has not established a mass emission threshold for $PM_{2.5}$, which is a subset of PM_{10}, this analysis has conservatively used the significance finding for PM_{10} as an indicator of potentially significant impacts for construction emissions of $PM_{2.5}$. Construction-related emissions would not exceed PCAPCD's recommended significance thresholds for ROG/VOC, or NOx. As shown in Table 6-7, estimated emissions from construction of 300,000 ft^2 of building space and 300,000 ft^2 of parking and roads for complementary elements over 5 years would add a negligible level of additional daily emissions.[24] For specific assumptions and modeling inputs used in the emissions calculations, refer to Appendix C.2.

Table 6-7. Summary of Maximum Daily Emissions of Criteria Air Pollutants and Ozone Precursors Associated with Construction by Year for Plan Concept 1

Maximum Daily Emissions (lb/day) – across all construction phases						
Year	**ROG/VOC**	**CO**	**NOx**	**SO_x**	**PM_{10}**	**$PM_{2.5}$**
2024	3.6	74.1	11.5	0.2	**288.3**	36.1
2025	1.3	51.6	8.3	0.1	**245.2**	32.2
2028	2.0	76.6	8.7	0.2	**85.0**	12.4
2029	3.2	129.8	15.9	0.3	**321.4**	36.2
2033	1.7	43.2	5.9	0.1	**93.0**	10.6
PCAPCD Construction Threshold of Significance (lb/day)	82	N/A	82	N/A	82	N/A
Exceeds Threshold?	No	No	No	No	**Yes**	See PM_{10}
Assumed Construction of Complementary Elements in Any Given Year[a]	2.3	8.3	4.6	0.0	0.5	0.2

[a] Emission calculations assumed construction of 300,000 ft^2 of building space and 300,000 ft^2 of parking and roads for complementary elements over 5 years, with emissions assumed to occur equally during each year in the 5-year period. This analysis did not evaluate the impacts of full buildout of complementary and programmatic elements (1,900,000 ft^2 of building space and of associated parking and roads), nor does it provide project-level analysis of the air quality impacts of construction of specific types of industrial activities.

Note:
Values in **bold** type indicate exceedance of the applicable PCAPCD Construction Threshold of Significance.

Prediction and analysis of the specific health consequences associated with criteria pollutants from an individual project are not feasible at this time. Unlike the predictive health risk assessments currently conducted using statewide guidance to evaluate human exposures to project-related TAC emissions, no proven approaches or guidance are available for this type of project-specific health study for criteria

[24] Emission calculations for this analysis of maximum daily project-related construction emissions assumed construction of 300,000 ft^2 of building space and 300,000 ft^2 of parking and roads for complementary elements over 5 years, with emissions assumed to occur equally during each year in the 5-year period. This analysis did not evaluate the timing or impacts of full buildout of complementary and programmatic elements (1,900,000 ft^2 of building space and associated parking and roads), nor does it provide project-level analysis of the air quality impacts of construction of specific types of industrial activities. Additional project-level analysis and air permits from PCAPCD may be required prior to construction.

pollutant emissions.[25] In this project analysis, comparison of emission results to PCAPCD's numerical thresholds is used as a surrogate for evaluation of potential health impacts. As described previously, the NAAQS and CAAQS are scientifically substantiated, numerical concentrations of criteria air pollutants considered to be protective of human health. PCAPCD's air quality thresholds of significance for project-level CEQA evaluation are used to evaluate the extent to which a project's emissions of criteria air pollutants and precursors would contribute to regional degradation of ambient air quality. PCAPCD has determined that projects that emit criteria air pollutants and ozone precursors at levels below the thresholds would not impede the air basin's capacity to attain the NAAQS and CAAQS under the emissions inventory found the in the applicable SIPs and air quality plans. As a result, the PCAPCD thresholds are tied to achieving or maintaining attainment designations with the health-protective NAAQS and CAAQS.

During more intensive construction periods, emissions estimates for Plan Concept 1 indicate that construction activities could generate daily emission emissions of PM_{10} that would exceed PCAPCD's recommended threshold and thereby contribute to the existing nonattainment status of Placer County and the SVAB with respect to the CAAQS for PM_{10}. Because $PM_{2.5}$ is a subset of PM_{10}, construction-generated emissions of $PM_{2.5}$ could also contribute to the nonattainment status of the SVAB with respect to the NAAQS for $PM_{2.5}$.

The addition of construction-generated particulate matter emissions to the regional emissions inventory could impede air quality planning efforts to bring the air basin into attainment of health-protective NAAQS and CAAQS. Acute health effects of PM_{10} and $PM_{2.5}$ exposure include breathing and respiratory symptoms, aggravation of existing respiratory and cardiovascular diseases, and premature death. Chronic health effects of exposure to particulate matter include alterations to the immune system and the initiation of cancer formation, or carcinogenesis (Placer County 2018). However, it would be misleading and speculative to correlate the levels of criteria air pollutant and precursor emissions associated with the proposed project to specific health outcomes to sensitive receptors. While the description of effects noted above could manifest in exposed receptors, actual effects on individuals depend on individual factors, such as life stage (for example, infants, adolescents, and the elderly are more sensitive), prior exposures to air pollution, preexisting cardiovascular or respiratory diseases, lifestyle choices, and genetic polymorphisms (Placer County 2019).

Even if this type of specific medical information, which is confidential to the individual, were available, potential health outcomes from exposure to PM_{10} and $PM_{2.5}$ can range from no effect to the effects described above. Therefore, other than describing the general types of health effects that could occur, it would be speculative to more specifically correlate exposure to emissions from this project to the degree and locations of specific health outcomes to receptors. Because the project's estimated maximum daily construction PM_{10} emissions would exceed the PCAPCD's mass emissions threshold, the proposed project has the potential to contribute emissions that could impede the area's ability to attain the NAAQS and CAAQS. The higher emissions levels and human exposure to the associated ambient air concentrations could result in adverse health effects. It is possible that health complications associated with exposure to PM_{10} and $PM_{2.5}$ in ambient air could be increased for nearby sensitive receptors due to project-related construction emissions, but it is not feasible to define the nature and extent of the health effects, if any, at this time.

[25] The California Supreme Court, in the case of *Sierra Club v. County of Fresno* (2018) 6 Cal. 5th 502, determined that the air quality analysis in the EIR prepared under CEQA for the Friant Ranch Project was inadequate because it did not make "a reasonable effort to substantively connect the project's air quality impacts to likely health consequences." The Court determined that "the EIR should be revised to relate the expected adverse air quality impacts to likely health consequences or explain in meaningful detail why it is not feasible at the time of drafting to provide such an analysis" (SMAQMD 2020). Proposed approaches to respond to the Supreme Court's Friant Ranch ruling, like those proposed by the SMAQMD in their final guidance (SMAQMD 2020), have not undergone adequate scientific or legal review, nor has the SMAQMD's recommended approach been proven in CEQA practice. As a result, the SMAQMD approach has not been used in this analysis.

Plan Concept 2

As described in Chapter 3, Project Description, the primary differences between Plan Concept 1 and Plan Concept 2 are related to where various facilities would be located on WPWMA's property and when various facilities would be developed. Construction of project elements under Plan Concept 2 is anticipated to begin in 2024 and continue periodically throughout the analysis period of approximately 30 years. The amount of new construction that would occur would also vary from year to year with Plan Concept 2 but would generally occur earlier in the project analysis period and at a faster pace than for Plan Concept 1. Analysis of the projected project schedule for Plan Concept 2, presented in Appendix C.2, identified 2024, 2026, 2031, and 2032 as potential peak construction years for Plan Concept 2. Table 6-8 summarizes estimated maximum daily construction emissions estimated for the calendar years when the highest levels of construction activity are predicted for Plan Concept 2. The estimated maximums represent worst plausible estimates of simultaneous construction on any given day; emissions are not expected to reach these levels. Like values presented in Table 6-7 for Plan Concept 1, the emission values presented in Table 6-8 represent construction with implementation of BMPs and project design measures, but no additional mitigation. For specific assumptions and modeling inputs, refer to Appendix C.2.

These differences would not change the conclusions regarding construction emissions of criteria air pollutants and ozone precursors identified for Plan Concept 1, including a finding of significance for PM_{10}, and potential significance for $PM_{2.5}$ as a subset of PM_{10}. Construction-related emissions would not exceed PCAPCD's recommended significance thresholds for ROG/VOC, or NOx. As such, impacts related to construction emissions of criteria air pollutants for implementation of Plan Concept 2 would be the same as described for Plan Concept 1.

Table 6-8. Summary of Maximum Daily Emissions of Criteria Air Pollutants and Ozone Precursors Associated with Construction by Year for Plan Concept 2

Maximum Daily Emissions (lb/day) – across all construction phases						
Year	**ROG/VOC**	**CO**	**NO_x**	**SO_x**	**PM_{10}**	**$PM_{2.5}$**
2024	3.5	115.8	13.7	0.3	**217.5**	36.4
2026	3.5	90.6	12.4	0.2	**301.1**	55.7
2031	2.0	76.6	8.7	0.2	**90.7**	20.3
2032	3.9	146.9	18.6	0.3	**376.3**	48.8
PCAPCD Construction Threshold of Significance (lb/day)	82	N/A	82	N/A	82	N/A
Exceeds Threshold?	No	No	No	No	**Yes**	See PM_{10}
Assumed Construction of Complementary Elements in Any Given Year[a]	2.3	8.3	4.6	0.0	0.5	0.2

[a] Emission calculations assumed construction of 300,000 ft^2 of building space and 300,000 ft^2 of parking and roads for complementary elements over 5 years, with emissions assumed to occur equally during each year in the 5-year period. This analysis did not evaluate the impacts of full buildout of complementary and programmatic elements (1,900,000 ft^2 of building space and associated parking and roads), nor does it provide project-level analysis of the air quality impacts of construction of specific types of industrial activities.

Note:
Values in **bold** type indicate exceedance of the applicable PCAPCD Construction Threshold of Significance.

Mitigation Measure 6-2(a): Construction emissions of criteria air pollutants (PM_{10} and $PM_{2.5}$) and ozone precursors.

Construction contractor(s) shall document their capability and commitment to implement PCAPCD's recommended construction mitigation measures and the project design measures identified in Table 6-1 as part of their grading/improvement plan submittals. Prior to any construction activity, the contractor(s) shall submit a Construction Emission/Dust Control Plan to PCAPCD, a minimum of 21 days before construction activity is scheduled to commence. To further mitigate the significant air quality impact identified for construction PM_{10} emissions, the following additional mitigation measures, expanding on those identified in Table 6-1 as BMPs and project design measures,[26] shall be implemented to address exhaust PM_{10} and $PM_{2.5}$ emissions and provide dust control.

Mitigation Measure 6-2(b): Project contractor(s) shall implement BMPs prior to or during all construction activities, including onsite construction-related grading.

The WPWMA shall require all construction contracts and plans to include the applicable construction BMPs and project design measures from Table 6-1, as well as the following:

- Designation of a person or persons to monitor fugitive dust emissions and enhance implementation of the Dust Control Plan to minimize dust complaints, reduce visible emissions to below 20 percent opacity, and prevent transport of dust offsite. Duties shall include holidays and weekend periods when work may not be in progress.
- Post signage at property boundaries with name(s) and contact information for designated person(s) for reporting of dust complaints.
- All roadways, driveways, sidewalks, parking lots intended for pavement as part of an applicable construction project shall be paved as soon as possible. In addition, building pads shall be laid immediately after grading unless seeding or soil binders are used.

Mitigation Measure 6-2(c): The WPWMA shall implement a recordkeeping program to oversee and enforce compliance with the BMP requirement for diesel-fueled equipment to use engines that meet Tier 4 Final emission standards, as certified by CARB, or cleaner, prior to or during onsite grading and construction activities.

This mitigation measure is intended for WPWMA oversight to ensure that all diesel-fueled construction equipment shall have engines that meet the Tier 4 Final emission standards, as certified by CARB, or cleaner, if feasible (City of Sacramento 2021). This requirement shall be verified through contractor submittal of an equipment inventory to the WPWMA for each construction project that includes the following information:

A. Type of Equipment

B. Engine Year and Age

C. Number of Years Since Rebuild of Engine (if applicable)

D. Type of Fuel Used

E. Engine Horsepower

[26] Note: Applicable measures from PCAPCD's recommended construction mitigation measures (PCAPCD 2017a) are incorporated in the proposed project as project design measures. For the list of BMPs and project design measures incorporated in the proposed project, please see the list of measures in Table 6-1.

F. Verified Diesel Emission Control Strategy (VDECS) information, if applicable, and other related equipment data

If any new equipment is added after submission of the inventory, the contractor(s) shall contact the WPWMA regarding the new equipment being used.

The project contractor(s) must also provide a signed Certification Statement for documentation of compliance and for future review by the WPWMA as needed. The Certification Statement shall state that the contractor agrees to compliance and acknowledges that a violation of this requirement shall constitute a material breach of contract.

The WPWMA may waive the equipment requirement above only under the following unusual circumstances:

- A particular piece of off-road equipment with Tier 4 Final standards is technically not feasible or not commercially available.
- The equipment would not produce desired emissions reduction due to expected operating modes.
- Installation of the equipment would create a safety hazard or impair visibility for the operator.
- There is a compelling emergency need to use other alternate off-road equipment.

If the WPWMA grants the waiver, the contractor shall use the next cleanest piece of off-road equipment available, as detailed in Table 6-9. If seeking a waiver from this requirement it must be demonstrated, to the satisfaction of the WPWMA, that the emissions do not exceed significance thresholds. If the project implements the "step down" approach, using construction equipment with less than Tier 4 emissions standards and the resulting emissions exceed the PCAPCD threshold, a mitigation fee (per ton of emissions) shall be assessed to achieve the remaining mitigation.

Table 6-9 describes the Off-Road Equipment Compliance Step Down approach:

- If engines that comply with Tier 4 Final off-road emission standards are not commercially available, then the contractor shall meet Compliance Alternative 1.
- If off-road equipment meeting Compliance Alternative 1 are not commercially available, then the project sponsor shall meet Compliance Alternative 2.
- If off-road equipment meeting Compliance Alternative 2 are not commercially available, then the project sponsor shall meet Compliance Alternative 3.

Table 6-9. Off-Road Equipment Compliance Step Down Approach

Compliance Alternative	Engine Emissions Standard	Emissions Control
1	Tier 4 Interim	Tier 4 Interim
2	Tier 3	CARB Level 3 VDECS
3	Tier 2 with retrofit	CARB Level 3 VDECS

For purposes of this mitigation measure, "commercially available" shall mean the availability of Tier 4 Final engines similar to the availability for other large-scale construction projects in the region occurring at the same time and taking into consideration factors such as (1) potential significant delays to critical-

path timing of construction for the project and (2) geographic proximity to the project site of Tier 4 Final equipment.

The project contractor(s) shall maintain records concerning relevant efforts to comply with this requirement and provide them to WPWMA on a weekly basis during active construction periods.

Level of Significance after Mitigation.

Implementation of Mitigation Measures 6-2(a) through 6-2(c) would result in additional reductions in fugitive dust and exhaust PM emissions. Due to the extensive list of emission reduction measures and BMPs incorporated in the project as design measures, estimation of the achievable additional reductions would be speculative. Available information on the benefits of the proposed mitigation measures is not sufficient to quantify the additional emission reductions that would occur, so this analysis of significance after mitigation is qualitative and conservative in nature.

Even with incorporation of all available and feasible mitigation measures, it is likely that project-related construction emissions would continue to exceed PCAPCD-recommended thresholds of significance for PM_{10}. Because of the scale and extent of construction activities that would occur, as well as the uncertainty of specific construction activities and timing, construction activities could overlap, resulting in emissions that would exceed PCAPCD's daily construction thresholds for PM_{10}. Construction emissions, even after mitigation, could contribute further to the nonattainment status of the Placer County and the SVAB for PM_{10} and $PM_{2.5}$. **This impact would remain significant and unavoidable.**

MRF Operations Design Concept Evaluation.

Proposed changes to MRF operations could be implemented under either Plan Concept and would potentially result in changes in quantities, timing, and release locations of project-related air emissions estimated for construction. The proposed changes would involve accelerated and expanded diversion of organic material, including OFMSW, for composting in CASP composting systems and increased recovery and diversion of recyclables. Changes may also involve addition of an enclosed building for organics receipt and processing.

To accommodate the proposed increase in the quantity of material processed at the organics management facility, the facility would need to be built sooner than anticipated in Plan Concept 1 and Plan Concept 2. The proposed total processing capacity would not exceed the full buildout capacity evaluated for Plan Concept 1 and Plan Concept 2 and the proposed CASP processes are similar to the ASP process analyzed as part of the proposed project, so facility sizing and design would not be expected to differ from the proposed project. Construction of an enclosed building for organics receipt and processing was not specifically analyzed as part of the proposed project and could result in a shifting of the year(s) for construction emissions or increased construction emissions for the organics management facility during the years when construction occurs. Increased diversion would reduce the amount of waste residuals sent to the landfill, reducing the frequency of landfill cell construction over time. Processing of increased quantities of organic material and recyclables could be accommodated within the existing MRF facility.

The conservative approach used to calculate potential maximum daily construction emissions associated with the proposed project included assessment of multiple overlapping construction projects to allow flexibility in the timing of individual projects. Both Plan Concepts analyzed potential peak periods of considerable construction activity near the beginning of the project analysis timeframe. It is anticipated that shifting the timing of construction of individual project elements to accommodate earlier construction of the organics management facility would not result in emissions exceeding those

calculated for the proposed project, even with the potential addition of an enclosed building for organics receipt and processing.

The PCAPCD recently issued permits to the WPWMA related to ASP composting; however, these permits would likely require updates as the project proceeds. The enclosed building for organics processing, if constructed, would be equipped with an odor control system would require preconstruction review and permitting by the PCAPCD as a stationary source. As the permitting process is undertaken, the WPWMA facility must continue to comply with applicable regulatory and permitting requirements.

Based on this qualitative review, the proposed MRF operations design concept changes would be covered under the current assumptions of this air quality impact analysis, and the conclusions of the project-level analysis related to construction emissions of criteria air pollutants would not change.

IMPACT 6-3	**Operational Emissions of Criteria Air Pollutants and Ozone Precursors.** Estimated net changes in total emissions associated with the future operation of solid waste elements, complementary elements, and supporting elements under the proposed project would exceed PCAPCD's recommended operational significance thresholds of 55 lb/day for NOx and 82 lb/day for PM_{10}. Exceedance of the thresholds indicates that air quality impacts associated with project-related operational emissions would be significant for NOx and PM_{10}. Because $PM_{2.5}$ is a subset of PM_{10}, the significance finding for PM_{10} is conservatively used to indicate potentially significant impacts related to $PM_{2.5}$. Operational emissions from the proposed project could contribute to the existing nonattainment status of Placer County and the SVAB region with respect to the NAAQS for ozone and $PM_{2.5}$, and the CAAQS for ozone and PM_{10}. It is reasonably foreseeable that operational emissions could result in increases in ambient air concentrations of ozone, PM_{10}, and $PM_{2.5}$, and could contribute to higher levels of exposure and health effects for some sensitive receptors. Prediction of the specific health consequences associated with the criteria pollutant emissions and ozone precursors from operation of an individual project is not feasible at this time. Operation of the proposed project elements would result in a net increase of criteria pollutants (NOx as an ozone precursor, PM_{10}, and $PM_{2.5}$) for which the project region is nonattainment under the applicable and health-protective federal or state ambient air quality standards. **This impact would be significant.**

Plan Concept 1

Operation of the proposed solid waste elements, complementary and programmatic elements, and supporting elements would result in emissions of ROG, NOx, PM_{10}, and $PM_{2.5}$. Operational emissions would be generated from worker commute trips, haul truck trips (commercial and self-haul), off-road equipment, waste receipt, recovery, and disposal operations, composting, soil management, generators, LFG-to-energy plant operation, LFG flares, and fugitive LFG. Hours and days of operation for the landfill and waste recovery facilities would vary by facility but were assumed to occur 52 weeks per year. The LFG collection system and the LFG-to-energy plant would be operated continuously, and fugitive LFG and compost process emissions would be emitted continuously, 24 hours per day, 7 days per week, and 52 weeks per year.

The incremental increases in activity for Plan Concept 1 were identified by comparing the activity levels forecasted for the project buildout year of 2050 (when maximum operational capacity is expected) to

baseline activity levels in 2018. Net daily emissions changes were calculated for the incremental changes in activity levels for each of the source categories that would operate under Plan Concept 1 at buildout. A peaking factor of 1.28 (peak 2018 weekday tonnage divided by the average 2018 weekday tonnage) was applied when determining the potential maximum daily emissions to account for variability in the quantity of material received and processed each day. Net daily operational emissions changes estimated for each source category were conservatively summed for each pollutant to approximate a hypothetical maximum operating scenario.[27] Table 6-10 summarizes the net maximum daily operational emissions increases estimated for project-related criteria air pollutants and ozone precursors under Plan Concept 1.

The emissions benefits associated with the proposed improvements in organic waste composting technology (e.g., transition from windrows to ASP composting) for future waste streams have been estimated. Actively composting piles of organic feedstocks emit VOCs, which can react in the atmosphere with oxides of nitrogen (NOx) to make ground-level ozone, a criteria pollutant. VOCs can also react with ammonia (NH_3) to create fine particulates (alternatively referred to as particulate matter ($PM_{2.5}$), another criteria pollutant). The proposed project would result in a net benefit for VOC emissions from composting operations, when compared to existing operations.

Net changes in estimated total daily emissions for operation of solid waste elements, complementary and programmatic elements,[28] and supporting elements under the proposed project have been compared to the PCAPCD CEQA significance thresholds for operational phase emissions, as described in the *CEQA Air Quality Handbook* (PCAPCD 2017a). Values that indicate an exceedance of the applicable threshold are in bold type. Results shown in Table 6-10 show that operational activities associated with the proposed project would result in total emissions of NOx and PM_{10} that exceed the PCAPCD significance thresholds of 55 lb/day for the ozone precursor NOx and 82 lb/day for PM_{10}, indicating that air quality impacts associated with project-related operational emissions would be significant for NOx and PM_{10}. Because $PM_{2.5}$ is a subset of PM_{10}, the significance finding for PM_{10} and the exceedance of the PM_{10} threshold of 82 lb/day by total operational daily $PM_{2.5}$ emissions are indicators of potentially significant impacts related to $PM_{2.5}$. Operational emissions would not exceed PCAPCD's recommended significance thresholds for ROG/VOC. For specific assumptions and modeling inputs used in the emissions calculations, refer to Appendix C.2. The emission values presented in Table 6-10 represent operation of project elements with implementation of BMPs and project design measures from Table 6-1, but no additional mitigation.

[27] Note that the maximum daily project-related activity levels for each source category would not typically occur on the same day, As a result, the hypothetical maximum estimates of net daily operational emissions increases are not expected to occur, but have been conservatively estimated for comparison to CEQA significance thresholds.

[28] Operation of 300,000 ft2 of building space and 300,000 ft2 of parking and roads for complementary elements was analyzed quantitatively. This analysis did not evaluate the timing or impacts of full buildout of complementary and programmatic elements (1,900,000 ft2 of building space and associated parking and roads), nor does it provide project-level analysis of the air quality impacts of operation of specific types of industrial facilities. Additional project-level analysis and air permits from PCAPCD may be required.

Table 6-10. Summary of Net Daily Operational Emissions Increases for Criteria Air Pollutants and Ozone Precursors for Plan Concept 1

(Net = Emissions Associated with Activity Delta between Buildout Year 2050 and Baseline Year 2018)

Maximum Daily Emissions (lb/day) – across all project elements

Source Category	VOC/ROG	CO	NO_x	SO_x	PM_{10}	$PM_{2.5}$
Onsite Roads	0.1	2.7	8.0	0.0	391.8	89.7
Offsite Roads	0.6	9.5	25.5	0.1	5.4	1.2
Off-road Equipment	5.3	193.3	32.1	0.4	0.7	0.7
MSW Spread/ Compact/Exc/Daily Cover	-	-	-	-	28.7	13.8
Wind Erosion	-	-	-	-	1.7	0.3
Composting Operations	-193.4	-	-	-	10.6	3.5
MRF Ops	-	-	-	-	13.1	2.0
C&D Wood Chip/Grind/Crush	-	-	-	-	20.3	5.4
Gasoline Generators	0.7	0.3	0.5	0.1	0.1	0.1
LFG-to-energy Engines[a]	164.0	303.7	72.9	0.2	0.0	0.0
Flares	7.0	30.7	9.2	10.2	5.2	5.2
LFG Fugitives	20.6	1.6	-	-	-	-
Operation of Complementary Elements[b]	8.4	11.6	9.2	0.1	7.2	2.0
Total (lb/day)	13.2	553.6	**157.5**	11.2	**485.0**	**123.9**
PCAPCD Operations Threshold of Significance (lb/day)	55	N/A	55	N/A	82	N/A (Significant if PM_{10} exceeds threshold)
Exceeds Threshold?	No	No	**Yes**	No	**Yes**	**Yes**

[a] Currently, the LFG-to-energy facility and all required air permits are held by a private operator. Other emission sources may also be owned and operated by others.

[b] Emission calculations assumed operation of 300,000 ft^2 of building space and 300,000 ft^2 of parking and roads for complementary elements. This analysis did not evaluate the impacts of full buildout of complementary and programmatic elements (1,900,000 ft^2 of building space and associated parking and roads), nor does it provide project-level analysis of the air quality impacts of construction of specific types of industrial activities.

Note:
Negative values indicate a net benefit. Values in **bold** type indicate an exceedance of the applicable PCAPCD Operational Threshold of Significance.

The following discussion regarding analysis of health consequences from project operational emissions is much like that provided for Impact 6-2 for construction emissions. Again, analysis of the specific health consequences associated with estimated emissions of criteria pollutants and ozone precursors from an individual project is not feasible at this time. Again, no proven approaches or guidance are available for this type of project-specific health study for criteria pollutant or ozone precursor emissions.[29] In this project analysis, comparison of emission results to PCAPCD's numerical thresholds is used as a surrogate for evaluation of potential health impacts. PCAPCD's air quality thresholds of significance for project-level CEQA evaluation are used to evaluate the extent to which a project's emissions of criteria air pollutants and precursors would contribute to regional degradation of ambient air quality. As a result, the PCAPCD thresholds are tied to achieving or maintaining attainment with the health-protective NAAQS and CAAQS.

As a precursor to ozone, additional NOx emissions in the region could result in an increase in ambient concentrations of ozone in the air basin and, moreover, could increase the likelihood and frequency that ambient air concentrations would exceed the CAAQS and NAAQS. As summarized in Section 6.2, Environmental Setting, human exposure to ozone may cause acute and chronic health impacts including coughing, pulmonary distress, lung inflammation, shortness of breath, and permanent lung impairment. Similarly, the estimated net increases in operational emissions of PM_{10} could impede air quality planning efforts to bring the air basin into attainment of the CAAQS for PM_{10} and the NAAQS for $PM_{2.5}$. Acute health effects of PM_{10} and $PM_{2.5}$ exposure include breathing and respiratory symptoms, aggravation of existing respiratory and cardiovascular diseases, and premature death. Chronic health effects of exposure to particulate matter include alterations to the immune system and the initiation of cancer formation, or carcinogenesis (Placer County 2018). However, it would be misleading and speculative to correlate the levels of criteria air pollutant and precursor emissions associated with the proposed project to specific health outcomes to sensitive receptors. While the description of effects noted above could manifest in exposed receptors, actual effects on individuals depend on individual factors, such as life stage (for example, infants, adolescents, and the elderly are more sensitive), prior exposures to air pollution, preexisting cardiovascular or respiratory diseases, lifestyle choices, and genetic polymorphisms (Placer County 2019).

[29] The California Supreme Court, in the case of *Sierra Club v. County of Fresno* (2018) 6 Cal. 5th 502, determined that the air quality analysis in the environmental impact report (EIR) prepared under CEQA for the Friant Ranch Project was inadequate because it did not make "a reasonable effort to substantively connect the project's air quality impacts to likely health consequences." The Court determined that "the EIR should be revised to relate the expected adverse air quality impacts to likely health consequences or explain in meaningful detail why it is not feasible at the time of drafting to provide such an analysis" (SMAQMD 2020). Proposed approaches to respond to the Supreme Court's Friant Ranch ruling, like those proposed by the SMAQMD in their final guidance (SMAQMD 2020), have not undergone adequate scientific or legal review, nor has the SMAQMD's recommended approach been proven in CEQA practice. As a result, the SMAQMD approach has not been used in this analysis.

Even if this type of specific medical information, which is confidential to the individual, were available, potential health outcomes from exposure to PM_{10} and $PM_{2.5}$ can range from no effect to the effects described above. Therefore, other than describing the general types of health effects that could occur, it would be speculative to more specifically correlate exposure to emissions from this project to the degree and locations of specific health outcomes to receptors. Because the project's estimated net daily emissions increases would exceed the PCAPCD's mass emissions thresholds for NOx and PM_{10}, the proposed project has the potential to contribute emissions that could impede the area's ability to attain the NAAQS and CAAQS. Higher emissions levels and human exposure to the associated ambient air concentrations could result in adverse health effects. It is possible that health complications associated with exposure to ozone, PM_{10}, and $PM_{2.5}$ in ambient air could be increased for nearby sensitive receptors due to project-related construction emissions, but it is not feasible to define the nature and extent of the health effects, if any, at this time.

Plan Concept 2

As described in Chapter 3, Project Description, the primary differences between Plan Concept 1 and Plan Concept 2 are related to where various facilities would be located on the WPWMA's property and when various facilities would be developed. Table 6-11 summarizes the net maximum daily operational emissions increases[30] estimated for project-related criteria air pollutants and ozone precursors under Plan Concept 2. Like values presented in Table 6-11 for Plan Concept 1, the emission values presented in Table 6-11 represent operation of project elements with implementation of BMPs and project design measures, but no additional mitigation. For specific assumptions and modeling inputs, refer to Appendix C.2.

These differences would not change the conclusions regarding operational emissions identified for Plan Concept 1, including a finding of significance for operational emissions of NOx, PM_{10}, and $PM_{2.5}$ as a subset of PM_{10}. Operational emissions would not exceed PCAPCD's recommended significance thresholds for ROG/VOC. As such, impacts related to operational emissions of criteria air pollutants and ozone precursors for implementation of Plan Concept 2 would be the same as described for Plan Concept 1.

[30] Note that the maximum daily project-related activity levels for each source category would not typically occur on the same day, As a result, the hypothetical maximum estimates of net daily operational emissions increases are not expected to occur, but have been conservatively estimated for comparison to CEQA significance thresholds.

Table 6-11. Summary of Net Daily Operational Emissions Increases for Criteria Air Pollutants and Ozone Precursors for Plan Concept 2
(Net = Emissions Associated with Activity Delta between Buildout Year 2050 and Baseline Year 2018)
Maximum Daily Emissions (lb/day) – across all project elements

Source Category	VOC/ROG	CO	NOx	SOx	PM_{10}	$PM_{2.5}$
Onsite Roads	0.1	2.0	3.8	0.0	253.2	61.0
Offsite Roads	0.6	9.5	25.5	0.1	5.4	1.2
Off-road Equipment	5.3	193.3	32.1	0.4	0.7	0.7
MSW Spread/Compact/Exc/Daily Cover	-	-	-	-	28.7	13.8
Wind Erosion	-	-	-	-	1.7	0.3
Composting Operations	(193.4)	-	-	-	10.6	3.5
MRF Ops	-	-	-	-	13.1	2.0
C&D Wood Chip/Grind/Crush	-	-	-	-	20.3	5.4
Gasoline Generators	0.7	0.3	0.5	0.1	0.1	0.1
LFG-to-energy Engines[a]	164.0	303.7	72.9	0.2	0.0	0.0
Flares	6.2	27.2	8.2	9.1	4.6	4.6
LFG Fugitives	19.4	1.5	-	-	-	-
Operation of Complementary Elements[b]	8.4	11.6	9.2	0.1	7.2	2.0
Total (lb/day)	11.2	549.2	**152.2**	10.0	**345.7**	**94.6**
PCAPCD Operations Threshold of Significance (lb/day)	55	N/A	55	N/A	82	N/A (Significant if PM_{10} exceeds threshold)
Exceeds Threshold?	No	No	Yes	No	Yes	Yes

[a] Currently the LFG-to-energy facility and all required air permits are held by a private operator. Other emission sources may also be owned and operated by others.

[b] Emission calculations assumed operation of 300,000 ft^2 of building space and 300,000 ft^2 of parking and roads for complementary elements. This analysis did not evaluate the impacts of full buildout of complementary and programmatic elements (1,900,000 ft^2 of building space and associated parking and roads), nor does it provide project-level analysis of the air quality impacts of construction of specific types of industrial activities.

Note:
Negative values (in parentheses) indicate a net benefit. Values in **bold** type indicate an exceedance of the applicable PCAPCD Operational Threshold of Significance.

Mitigation Measure 6-3: Operational emissions of criteria air pollutants and ozone precursors.

The WPWMA and their operation contractor(s) shall document their capability and commitment to implement the operational emission reduction BMPs and project design measures identified in Table 6-1 as part of their contracts and plan submittals. To further mitigate the significant air quality impacts

identified for operational emissions of NOx and PM_{10}, the following additional mitigation measures, expanding on those identified in Table 6-1 as BMPs and project design measures,[31] shall be implemented.

Mitigation Measure 6-3(a): Fund NOx emissions reductions through an Offsite Mitigation Fee Program.

The operation of solid waste elements, complementary elements, and supporting elements under the proposed project would result in net emissions increases in operational emissions that would exceed PCAPCD's recommended operational significance thresholds of 55 lb/day for NOx, even with implementation of the BMPs and project design measures listed in Table 6-1. The estimated total increase in NOx emissions estimated in excess of the significance threshold for this project under Plan Concept 1 is approximately 102.5 lb/day, equivalent to 9.4 tons per ozone season,[32] and under Plan Concept 2 is approximately 97.2 lb/day, equivalent to 8.9 tons per ozone season. To mitigate the net project-related increases in operational NOx emissions, the WPWMA shall participate in one of the following voluntary offsite mitigation programs:

- Establish and fund an offsite mitigation project to result in a NOx emission reduction equivalent to the total amount of emissions estimated to exceed the PCAPCD significance threshold over a single season. Developing an offsite mitigation program in western Placer County shall be coordinated with PCAPCD. Emission reductions achieved through the offsite mitigation program must be real and quantifiable, as verified by PCAPCD. Examples of NOx emission reduction mitigation projects include, but are not limited to retrofitting, repowering, or replacing heavy-duty engines from mobile sources (for example, buses, construction equipment, on-road haulers), provision of electrical charging stations to support vehicle electrification, or other programs to reduce regional NOx emissions.
- Participate in the District's Off-Site Mitigation Fee Program by paying the equivalent amount of money, to mitigate the net project contribution of NOx that exceeds the 55 lb/day threshold over a single season. As indicated previously, the estimated NOx emissions offset requirement is approximately 9.4 tons/year for Plan Concept 1 and 8.9 tons/year for Plan Concept 2. The estimated mitigation fees for the NOx emissions increase associated with project operations is approximately $177,000 for Plan Concept 1 and $167,000 for Plan Concept 2, based upon PCAPCD's adopted cost-effectiveness rate of $18,790 per ton for ozone precursors like NOx and the current California CPI rate (PCAPCD 2017b, 2021b). The actual amount to be paid shall be determined based on the selected program and applicable cost-effectiveness rate agreed to by the WPWMA and PCAPCD and shall be paid by the WPWMA or other responsible parties.
- Any combination of the above or other measures, as determined feasible by WPWMA and PCAPCD.

Mitigation Measure 6-3(b): Fund PM_{10} emissions reductions through an Off-Site Mitigation Fee Program.

The operation of solid waste elements, complementary elements, and supporting elements under the proposed project would result in net emissions increases in operational emissions that would exceed PCAPCD's recommended operational significance thresholds of 82 lb/day for PM_{10}, even with implementation of the BMPs and project design measures listed in Table 6-1. The estimated total increase in PM_{10} emissions estimated in excess of the significance threshold for this project under Plan Concept 1 is approximately 403.0 lb/day, equivalent to 36.5 tons per winter season, and for Plan Concept 2 is approximately 263.7 lb/day, equivalent to 23.9 tons per winter season. To mitigate the net project-related

[31] Note: Applicable measures from PCAPCD's recommended operational emission mitigation measures (PCAPCD 2017a) are incorporated in the proposed project as project design measures. For the list of BMPs and project design measures incorporated in the proposed project, please see the list of measures in Table 6-1.

[32] The summer season is estimated at 184 days per year and applies to estimation of mitigation requirements for ozone precursors like NOx, and the winter season is estimated at 181 days and applies for PM_{10} (PCAPCD 2017a).

increases in operational PM_{10} emissions, the WPWMA shall participate in one of the following voluntary offsite mitigation programs:

- Establish and fund an offsite mitigation project to result in a PM_{10} emission reduction equivalent to the total amount of emissions estimated to exceed the PCAPCD significance threshold over a single season. Developing an offsite mitigation program in western Placer County shall be coordinated with PCAPCD. Emission reductions achieved through the offsite mitigation program must be real and quantifiable, as verified by PCAPCD. Examples of PM_{10} emission reduction mitigation projects include, but are not limited to retrofitting, repowering, or replacing heavy-duty engines from mobile sources (for example, buses, construction equipment, on-road haulers), replacing woodstoves, road paving, or other programs to reduce PM_{10} emissions.
- Participate in the District's Off-Site Mitigation Fee Program by paying the equivalent amount of money, to mitigate the net project contribution of PM_{10} that exceeds the 82 lb/day threshold over a single season. As indicated previously, the estimated PM_{10} emissions offset requirement is approximately 36.5 tons/year for Plan Concept 1 and 23.9 tons/year for Plan Concept 2. The estimated mitigation fees for the PM_{10} emissions increase associated with project operations is approximately $220,800 for Plan Concept 1 and $144,600 for Plan Concept 2, based upon an assumed cost-effectiveness rate of $6,050 per ton used for PM_{10} in the SAP DEIR (Placer County 2018). The actual amount to be paid shall be determined based on the selected program and applicable cost-effectiveness rate agreed to by the WPWMA and PCAPCD and shall be paid by the WPWMA or other responsible parties.
- Any combination of the above or other measures, as determined feasible by the WPWMA and PCAPCD.

Level of Significance after Mitigation.

Implementation of Mitigation Measure 6-3(a) and 6-3(b) would result in additional reductions in NOx and PM_{10} emissions and funded measures may also reduce $PM_{2.5}$. Available information on the benefits of the proposed mitigation measures is not sufficient to quantify the additional emission reductions that would occur, so this analysis is qualitative and conservative in nature.

Even with incorporation of all available and feasible BMPs, project design measures, and mitigation measures to reduce emissions, including funding of one-time mitigation fees, it is likely that project-related operational emissions could continue to exceed PCAPCD-recommended thresholds of significance for the ozone precursor NOx and PM_{10}. Even though the operational emissions of some elements developed under the proposed project would not individually generate emissions of NOx that exceed PCAPCD's operational threshold of 55 lb/day, or PM_{10} that would exceed the threshold of 82 lb/day, the combined level of operational emissions associated with the project elements could exceed PCAPCD's thresholds. Participation in a verified NOx or PM_{10} offset program cannot be assured. Operational emissions, even after mitigation, could contribute further to the nonattainment status of the SVAB for ozone, PM_{10}, and $PM_{2.5}$. No additional feasible mitigation measures are available to reduce this impact. **This impact would remain significant and unavoidable**.

MRF Operations Design Concept Evaluation.

Proposed changes to MRF operations could be implemented under either Plan Concept and would potentially result in changes in quantities, timing, and release locations of estimated project-related air emissions from operations. The proposed changes would involve accelerated and expanded diversion of organic material, including OFMSW, for composting in CASP composting systems and increased recovery and diversion of recyclables. Changes may also involve addition of an enclosed building for organics receipt and processing.

To accommodate the proposed increase in the quantity of material processed at the organics management facility, facility operation would need to increase sooner than anticipated in Plan Concept 1 and Plan Concept 2, but the proposed total processing capacity would not exceed the full buildout capacity evaluated for the proposed project. The proposed CASP processes are similar to the ASP process analyzed as part of the proposed project and would provide similar or better control of fugitive emissions from active composting. Use of an enclosed building for organics receipt and processing was not specifically analyzed as part of the proposed project, but is not expected to result in increased operational emissions. Processing of increased quantities of organic material and recyclables could be accommodated within the existing MRF facility, but may require use of additional equipment which could generate increased air emissions. Increased amounts of recyclables recovered from the MRF would also be anticipated to result in a near-term increase in outbound traffic taking material to market and associated air emissions.

Increased diversion would reduce the amount of waste residuals sent to the landfill, reducing the operational emissions associated with landfill waste disposal. Diversion of more OFMSW from the landfill within a faster timeframe would correspond to a near-term (next 10 years) reduction in LFG production, including reduced emissions of fugitive LFG.

The conservative approach used to calculate potential maximum daily emissions associated with operation of the proposed project included application of a peaking factor to address variability in material quantities received and processed, and the assumption that maximum daily emissions for each facility could occur on the same day. While the proposed changes have the potential to result in near-term emissions increases for the organics management facility and MRF, they also have the potential to result in decreased emissions from waste disposal operations and LFG. Overall, operational activity is not expected to exceed the levels analyzed for full buildout of the proposed project with implementation of the proposed changes.

The PCAPCD recently issued permits to the WPWMA related to ASP composting; however, these permits would likely require updates as the project proceeds. The enclosed building for organics processing, if constructed, would be equipped with an odor control system would require preconstruction review and permitting by the PCAPCD as a stationary source. As the permitting process is undertaken, the WPWMA facility must continue to comply with applicable regulatory and permitting requirements.

Based on this qualitative review, the proposed MRF operations design concept changes would be covered under the current assumptions of this air quality impact analysis, and the conclusions of the project-level analysis related to operational emissions of criteria air pollutants and ozone precursors would not change.

IMPACT 6-4	**Mobile-Source Concentrations of Carbon Monoxide**. Though buildout of the proposed project would result in additional vehicle trips on the surrounding roadway network, mobile-source emissions of CO associated with the proposed project would not exceed the PCAPCD's screening criterion for CO dispersion modeling. Therefore, the proposed project is not anticipated to cause a localized exceedance of the NAAQS and CAAQS for CO. **This impact would be less than significant.**

Plan Concept 1

Local mobile-source CO emissions near roadway intersections are a direct function of traffic volume, speed, and delay. Transport of CO from offsite locations is extremely limited because, under normal meteorological conditions, it disperses rapidly with distance from the source. However, under certain meteorological conditions, CO concentrations near roadways and intersections may reach unhealthy levels

at nearby sensitive land uses, such as residential units, hospitals, schools, and childcare facilities. As a result, it is recommended that CO be analyzed at the local level instead of at the regional level (Placer County 2018).

PCAPCD's screening criterion for CO dispersion modeling indicate that projects emitting less than 550 lb/day of CO from vehicle operation are not anticipated to exceed the NAAQS and CAAQS for CO (PCAPCD 2017a). Although the maximum daily CO emissions from vehicle trips on offsite roads associated with construction and operation of the proposed project are not anticipated to occur contemporaneously, they were conservatively summed for comparison to the PCAPCD screening criterion. As shown in Table 6-12, estimated mobile-source emissions of CO from offsite vehicle trips for Plan Concept 1 would not exceed PCAPCD's screening criterion; as summed, they are far less than the threshold of significance. Therefore, CO dispersion modeling is not recommended, and the proposed project is not anticipated to cause a localized CO impact. This impact would be less than significant.

Table 6-12. Mobile-Source CO Emissions from Vehicle Trips for Plan Concept 1
(Net = Emissions Associated with Activity Delta between Buildout Year 2050 and Baseline Year 2018)

Mobile Sources: Vehicle Trips on Offsite Roads	Maximum Daily CO Emissions (lb/day)
Operation of Solid Waste Elements and Supporting Elements	9.5
Construction of Solid Waste Elements and Supporting Elements	1.6
Operation of Complementary Elements[a]	10.7
Assumed Construction of Complementary Elements in Any Given Year[a]	0.3
Total (lb/day)	22.1
PCAPCD Threshold of Significance (lb/day)	> 550 from vehicle trips
Exceeds Threshold?	No

[a] Emission calculations assumed construction and operation of 300,000 ft^2 of building space and 300,000 ft^2 of parking and roads for complementary elements. Construction was assumed to occur over 5 years, with emissions assumed to occur equally during each year in the 5-year period. This analysis did not evaluate the impacts of full buildout of complementary and programmatic elements (1,900,000 ft^2 of building space and associated parking and roads), nor does it provide project-level analysis of the air quality impacts of construction of specific types of industrial activities.

Note:
> = greater than

Plan Concept 2

As described in Chapter 3, Project Description, the primary differences between Plan Concept 1 and Plan Concept 2 are related to where various facilities would be located on the WPWMA's property and when various facilities would be developed. Due to these differences, mobile-source emissions of CO for Plan Concept 2 could differ from mobile-source emissions of CO for Plan Concept 1. As shown in Table 6-13, estimated offsite mobile-source emissions of CO for Plan Concept 2 would not exceed PCAPCD's screening criterion; as summed, they are far less than the threshold of significance. Therefore, CO dispersion modeling is not recommended, and the proposed project is not anticipated to cause a localized CO impact. This impact would be less than significant.

Table 6-13. Mobile-Source CO Emissions from Vehicle Trips for Plan Concept 2
(Net = Emissions Associated with Activity Delta between Buildout Year 2050 and Baseline Year 2018)

Mobile Sources: Vehicle Trips on Offsite Roads	Maximum Daily CO Emissions (lb/day)
Operation	9.5
Construction	1.7
Operation of Complementary Elements[a]	10.7
Assumed Construction of Complementary Elements in Any Given Year[a]	0.3
Total (lb/day)	22.2
PCAPCD Threshold of Significance (lb/day)	>550 from vehicle trips
Exceeds Threshold?	No

[a] Emission calculations assumed construction and operation of 300,000 ft^2 of building space and 300,000 ft^2 of parking and roads for complementary elements. Construction was assumed to occur over 5 years, with emissions assumed to occur equally during each year in the 5-year period. This analysis did not evaluate the impacts of full buildout of complementary and programmatic elements (1,900,000 ft^2 of building space and associated parking and roads), nor does it provide project-level analysis of the air quality impacts of construction of specific types of industrial activities.

MRF Operations Design Concept Evaluation.

Proposed changes to MRF operations could be implemented under either Plan Concept and would potentially result in changes in quantities, timing, and release locations of estimated air emissions associated with project-related construction and operations. The proposed changes would involve accelerated and expanded diversion of organic material, including OFMSW, for composting in CASP composting systems and increased recovery and diversion of recyclables.

This accelerated diversion rate may result in a nominal increase in traffic in the near term as materials diverted from the waste stream are recovered and taken offsite. However, this increase in near-term traffic would be less than the net increase in vehicle trips associated with full buildout of the Waste Action Plan and evaluated as part of the proposed project. Based on this qualitative review, the proposed MRF operations design concept changes would be covered under the current assumptions of this air quality impact analysis, and the conclusions of the project-level analysis related to mobile-source concentrations of CO would not change.

IMPACT 6-5	**Exposure of Sensitive Receptors to TACs**. Estimated net changes in TAC emissions associated with construction and operation of solid waste elements, complementary elements, and supporting elements under the proposed project would not result in the exposure of sensitive receptors to substantial TAC concentrations. Based on the results of a HRA for project-related emissions, the evaluated exposure conditions at nearby residential, workplace, and sensitive receptor locations would not result in risk values that exceed PCAPCD thresholds of significance at any modeled receptors, including sensitive receptors. Modeled emissions and exposures would not result in an incremental increase in lifetime cancer risk of greater than 10 in 1 million, nor would they result in hazard indices for noncancer chronic (HIC) or acute exposures (HIA) greater than 1.0. **This impact would be less than significant.**

Plan Concept 1

Construction and operation of the proposed project under Plan Concept 1 would result in TAC emissions from the MRF, landfill, composting facility, LFG-to-energy facility and flares, and fuel combustion in on- and off-road vehicles and equipment. An HRA was conducted to evaluate potential human health risks associated with exposure to pollutant concentrations resulting from net increases of project-related TAC emissions for Plan Concept 1. The HRA was developed using air dispersion modeling of the project-related emissions and characterization of the resultant exposures and health risks using approved risk assessment methodology from the California OEHHA (OEHHA 2015), CARB risk management guidance (CARB 2015), and CEQA guidelines (PCAPCD 2017a).

This HRA follows four general steps to estimate health impacts:

A. Identification and quantification of project-related TAC emissions

B. Evaluation of pollutant transport (using air dispersion modeling) to estimate ground-level TAC concentrations at each receptor location in the plotted receptor grid and at sensitive receptor locations

C. Assessment of human exposures[33]

D. Use of a risk characterization model to estimate the potential health risks at each receptor location

TAC emissions for the incremental increase in activity associated with operation of the proposed project were calculated for the project buildout year of 2050, when maximum operational capacity is expected. The incremental increase is based on overall tonnage increase for each facility with the proposed project and is the same for both Plan Concepts (Figure 1-4, 2018 Waste Material Flowchart, and Figure 3-4, 2050 Waste Material Flowchart). A peaking factor of 1.28 (obtained by dividing the peak 2018 weekday tonnage by the average 2018 weekday tonnage) has been applied to represent a hypothetical future maximum day for purposes of maximum short-term emissions. For purposes of annual emission estimates in the modeling analysis, annual average emissions were used without the use of the short-term peaking factor. For operational sources for which no hourly emission data was available, maximum daily emissions assumed a 14-hour operational day.

Throughout operation of the proposed project, construction would occur as new or existing facilities that are part of the proposed project would be constructed, upgraded, expanded, or replaced. In order to determine the maximum annual construction emissions from diesel off-road equipment, emissions were calculated for hypothetical peak years for each Plan Concept. These years generally included construction of major project elements or multiple construction projects estimated to be completed in the same year. Emissions from construction projects completed in all other, nonpeak years would be expected to be lower than emissions in the hypothetical peak years.

The annual emission rate values for construction used in the modeling were derived by averaging the annual emission rate values for the individual hypothetical peak years for each Plan Concept. These annual emissions were conservatively assumed to occur during each of the 30 years of this HRA to account for varying levels of construction over the analysis period. For short-term emissions, the maximum daily emissions calculated assume all construction projects within a given year could overlap and therefore

[33] The risk assessment evaluated both carcinogenic (cancer) and noncarcinogenic (noncancer) health risks for two exposure scenarios: one for exposure of existing receptors to project-related increases in TAC emissions (for project-level impact analysis), and one that reflects potential receptor locations and exposure conditions under future development plans (presented in the cumulative impact analysis in Chapter 19). The existing receptor locations have been characterized based on current land use types and buildings, and the future receptor locations have been characterized based on future developments, including residential communities, businesses, and sensitive receptors such as schools.

reflect the sum of the max daily emissions for each individual construction project divided by an 8-hour workday.

The TAC emission rates used in the HRA analysis were modeled assuming concurrent operational and construction activity.

The American Meteorological Society/Environmental Protection Agency Regulatory Model (AERMOD) (Version 21112) was used for air dispersion modeling, as recommended in the EPA Appendix W, Guideline on Air Quality Models (EPA 2017). The most recent version of CARB's Hotspots Analysis and Reporting Program (HARP2) (Version 21081), with the revised unit risk and cancer potency values updated in October 2020, was used for this analysis. The updated sensitivity factors were applied in accordance with the *Risk Management Guidance for Stationary Sources of Air Toxics* (CARB 2015b). As recommended by the 2015 OEHHA and CARB risk management guidance, a Tier 1 assessment was performed (OEHHA 2015; CARB 2015). A Tier 1 assessment is the most conservative of the four Tiers of assessment methodologies identified in the OEHHA guidance and uses a standard point-estimate approach, with standard OEHHA assumptions.

The 2015 OEHHA guidance uses AERMOD-predicted pollutant concentrations, exposure assumptions, and approved health values (that is, pollutant-specific cancer potency values and reference exposure levels [RELs]) from OEHHA to predict potential health impacts. Following the 2015 OEHHA guidance and the 2017 PCAPCD guidance, the HRA estimated potential health impacts associated with the following exposure routes: inhalation, dermal absorption, and ingestion of homegrown produce, farm products (meat and eggs), soil, and mother's milk. Health risk results are presented in terms of the incremental increase in lifetime cancer risk, chronic hazard index (HIC), and acute hazard index (HIA). These types of results are explained in the following:

- Cancer risks are evaluated based on the estimated annual project-related TAC emission rates, ground-level concentrations obtained from the dispersion modeling analysis, and values for inhalation cancer potency, oral slope factor, frequency and duration of exposure at the receptor, age-specific sensitivity factors, and breathing rates of the exposed persons from the HARP model. Potential cancer risks for residential and sensitive receptors were evaluated using a scenario assuming 30-year continuous exposure duration starting in the third trimester. Potential cancer risks for worker and commercial/industrial receptors were evaluated using a scenario assuming a 25-year workplace exposure duration (8 hours per day, 5 days per week starting at age 16 years old), as recommended in the OEHHA Guidelines (OEHHA 2015). For carcinogens, the toxicity criterion, or health guidance value, is the cancer potency factor, which describes the potential risk of developing cancer per unit of average daily dose over a 70-year lifetime. Cancer inhalation and oral potency factors have been derived by OEHHA or EPA and approved by the State's Scientific Review Panel on Toxic Air Contaminants (OEHHA 2015). Cancer risk results are expressed as the incremental increase in lifetime cancer risk above baseline levels of risk, typically as a predicted number (of persons) per 1 million individuals.
- Chronic toxicity is defined as adverse health effects from prolonged chemical exposure caused by chemicals accumulating in the body. To assess long-term chronic noncancer exposures, modeled TAC ground-level concentrations were compared to chemical-specific RELs developed by OEHHA to obtain an HIC. The REL is a concentration in ambient air at or below which no adverse health effects are anticipated. Noncancer chronic health risks are calculated as a hazard quotient, which is the modeled exposure concentration of each contaminant divided by its REL. Hazard quotients for pollutants affecting the same target organ are summed with the resulting totals expressed as hazard indices (HI) for each organ system. HIC values less than 1 are assumed to reflect pollutant exposure concentrations with no anticipated adverse health effects.

- Acute toxicity is defined as adverse health effects caused by a brief chemical exposure of no more than 24 hours. To assess acute noncancer exposures, predicted 1-hour average TAC concentrations were compared to chemical-specific acute RELs to obtain an HIA. Similar to assessing chronic noncancer health risks, acute health risks were calculated as a hazard quotient, which is the modeled exposure concentration of each contaminant divided by its REL. Hazard quotients for pollutants affecting the same target organ are summed with the resulting totals expressed as HIs for each organ system. Again, HIA values less than 1 are assumed to reflect exposures with no anticipated adverse health effects.

By plotting the risk results on the receptor grid for the project, cancer, chronic, and acute health risks were estimated for the locations of the hypothetical maximally exposed individual at a residential location (MEIR), the maximally exposed individual at a workplace location (MEIW), and at sensitive receptors within 10 kilometers of the project site. Presently there is an onsite groundskeeper residence located within the property boundary of the facility, which is slated to be removed prior to the completion of the proposed project. The HRA results for the location of the groundskeeper residence are presented in Appendix D of the Health Risk Assessment Modeling Report (Appendix C.5 of this EIR) for informational purposes but are not used as a basis for determining significance. Health risk results at the modeled point of maximum impacts (PMI) are also estimated. Risk results predicted at the MEIR, MEIW, and sensitive receptor locations for Plan Concept 1 are presented in Table 6-14 and Table 6-15. Results have been compared to the PCAPCD's recommended thresholds of significance summarized below (PCAPCD 2017a):

- Incremental increase in cancer risk of 10 in 1 million individuals
- HIC of 1.0
- HIA of 1.0

Table 6-14. Health Risk Assessment Cancer Risk Results for Plan Concept 1 – Project-Level Analysis

Receptor Type[a]	Receptor Location		Incremental Increase in Cancer Risk	PCAPCD Significance Threshold
	X Coordinate (m)	Y Coordinate (m)	(per 1 million)	(per 1 million)
MEIR[b]	645,250	4,297,000	4.7	10
MEIW[c]	645,300	4,300,100	6.7	10
Existing Sensitive Receptor[d]	645,250	4,297,000	4.7	10

[a] Risk results for the groundskeeper residence are included in the HRA Modeling Report for informational purposes.

[b] The MEIR represents the location of the maximum observed risk at residential receptors as defined by land use type for the existing analysis or as observed in aerial imagery.

[c] The MEIW is represented as the location of the maximum observed risk at all modeled receptors.

[d] Existing sensitive receptor locations that would have fallen within the footprint of the modeled sources were removed from this health risk analysis.

Note:
Receptor location coordinates are respective to UTM NAD83 Zone 10.

Table 6-15. Health Risk Assessment Noncancer Risk Results for Plan Concept 1– Project-Level Analysis

Receptor Type[a]	Noncancer Chronic Risk (HIC)	Noncancer Acute Risk (HIA)	PCAPCD Significance Threshold for HIC and HIA
MEIR[b]	0.004	0.12	1.0
PMI	0.203	0.71	1.0
Existing Sensitive Receptor	0.003	0.12	1.0

[a] Risk results for the groundskeeper residence are included in the HRA Modeling Report for informational purposes.

[b] The MEIR represents the location of the maximum observed risk at residential receptors as defined by land use type for the existing analysis or as observed in aerial imagery.

Note:
Receptor location coordinates are respective to UTM NAD83 Zone 10.

Using the OEHHA guidance, the incremental increase in lifetime cancer risk associated with exposure to construction and operation emissions from implementation of Plan Concept 1 at the location of the MEIR (also the existing sensitive receptor, located approximately 2 kilometers from the facility's southeastern boundary) is predicted to be 4.7 in 1 million. The maximum incremental increase in cancer risk predicted for worker exposures at the location of the MEIW (located near the intersection of Athens Avenue and Foothills Blvd) is predicted to be 6.7 in 1 million. For specific assumptions, modeling inputs, figures, and risk results, refer to Appendix C.5.

The HIC and HIA values estimated for the locations of maximum impact for noncancer chronic and acute exposures are all less than the PCAPCD threshold of 1.0.

No cancer, chronic, or acute thresholds have been exceeded, indicating health risk impacts for TAC emissions associated with the proposed project under Plan Concept 1 would be less than significant.

Plan Concept 2

As described in Chapter 3, Project Description, the primary differences between Plan Concept 1 and Plan Concept 2 are related to where various facilities would be located on the WPWMA's property and when various facilities would be developed. Table 6-16 and Table 6-17 present cancer and noncancer health risk results, respectively, for exposure of receptors to the TAC emissions estimated for the proposed project under Plan Concept 2.

Estimated risks for Plan Concept 2 are similar to those estimated for Plan Concept 1. Using the OEHHA guidance, the incremental increase in lifetime cancer risk associated with exposure to construction and operation emissions from implementation of Plan Concept 2 at the location of the MEIR (also the existing sensitive receptor, located approximately 2 kilometers from the facility's southeastern boundary) is predicted to be 4.7 in 1 million. The maximum incremental increase in cancer risk predicted for worker exposures at the location of the MEIW (located near the intersection of Athens Avenue and Foothills Blvd) is predicted to be 6.8 in 1 million. For specific assumptions, modeling inputs, figures, and risk results, refer to Appendix C.5.

The HIC and HIA values estimated for the locations of maximum impact for noncancer chronic and acute exposures are all less than the PCAPCD threshold of 1.0.

No cancer, chronic, or acute thresholds have been exceeded, indicating health risk impacts for TAC emissions associated with the proposed project under Plan Concept 2 would be less than significant.

Table 6-16. Health Risk Assessment Cancer Risk Results for Plan Concept 2– Project-Level Analysis

Receptor Type[a]	Receptor Location		Incremental Increase in Cancer Risk	PCAPCD Significance Threshold
	X Coordinate (m)	Y Coordinate (m)	(per 1 million)	(per 1 million)
MEIR[b]	645,250	4,297,000	4.7	10
MEIW[c]	645,300	4,300,100	6.8	10
Existing Sensitive Receptor[d]	645,250	4,297,000	4.7	10

[a] Risk results for the groundskeeper residence are included in the HRA Modeling Report for informational purposes.

[b] The MEIR represents the location of the maximum observed risk at residential receptors as defined by land use type for the existing analysis or as observed in aerial imagery.

[c] The MEIW is represented as the location of the maximum observed risk at all modeled receptors.

[d] Existing sensitive receptor locations that would have fallen within the footprint of the modeled sources were removed from this health risk analysis.

Note:
Receptor location coordinates are respective to UTM NAD83 Zone 10.

Table 6-17. Health Risk Assessment Noncancer Risk Results for Plan Concept 2 – Project-Level Analysis

Receptor Type[a]	Noncancer Chronic Risk (HIC)	Noncancer Acute Risk (HIA)	PCAPCD Significance Threshold for HIC and HIA
MEIR[b]	0.003	0.10	1.0
PMI	0.218	0.69	1.0
Existing Sensitive Receptor	0.003	0.10	1.0

[a] Risk results for the groundskeeper residence are included in the HRA Modeling Report for informational purposes.

[b] The MEIR represents the location of the maximum observed risk at residential receptors as defined by land use type for the existing analysis or as observed in aerial imagery.

Note:
Receptor location coordinates are respective to UTM NAD83 Zone 10.

MRF Operations Design Concept Evaluation.

Proposed changes to MRF operations could be implemented under either Plan Concept and would potentially result in changes in quantities, timing, and release locations of estimated project-related air emissions from construction and operations. The proposed changes would involve accelerated and expanded diversion of organic material, including OFMSW, for composting in CASP composting systems and increased recovery and diversion of recyclables. Changes may also involve addition of an enclosed building for organics receipt and processing. This accelerated diversion rate may result in a nominal

increase in traffic in the near term as materials diverted from the waste stream are recovered and taken offsite. Diversion of more OFMSW from the landfill within a faster timeframe would correspond to a near-term (next 10 years) reduction in LFG production, and reduced emissions of fugitive LFG and the associated TACs.

The PCAPCD recently issued permits to the WPWMA related to ASP composting; however, these permits would likely require updates as the project proceeds. The enclosed building for organics processing, if constructed, would be equipped with an odor control system that may require permitting by the PCAPCD as a stationary source. As the permitting process is undertaken, the WPWMA facility must continue to comply with applicable regulatory and permitting requirements. Under PCAPCD Rule 513 ("Toxics New Source Review"), all stationary sources that have the potential to emit TACs are required to obtain permits from PCAPCD. PCAPCD may grant permits to these operations if they are constructed and operated in accordance with applicable regulations, including new source review standards and air toxics control measures.

A project-level HRA has been conducted to assess the potential for project-related TAC emissions to expose receptors to substantial health risks. The analysis found less than significant impacts for the proposed project without the MRF operations design changes. To evaluate the MRF operations design changes, TAC emissions for stationary sources that would change to meet the accelerated and expanded demand for OFMSW processing and CASP composting may need to be evaluated at the time of air permitting. If the facility changes would emit TACs in excess of PCAPCD's standard of significance for TACs, the sources would have to implement BACT to reduce the TAC emissions.

IMPACT 6-6	**Create Objectionable Odors Affecting a Substantial Number of People**. Implementation of the solid waste elements, complementary and programmatic elements, and supporting elements under the proposed project has the potential to create objectionable odors affecting a substantial number of people. The proposed project would implement numerous facility improvements, including more efficient waste management operations and odor-abatement strategies. However, the nature and effectiveness of these strategies are unknown, there are no quantifiable thresholds of significance for odor impacts, and there is no existing fee program or other mechanism by which to fund odor mitigation. **Impacts related to odors would be significant.**

Plan Concept 1

The occurrence and severity of odor impacts depends on numerous factors, including the nature, frequency, and intensity of the source; wind speed and direction; distance from the odor source; and the sensitivity of the affected receptor (PCAPCD 2017a). Local meteorology, including the prevailing wind direction near the site, is described in Section 6.2.1. With approval of the SAP/PRSP, the residential buffer zone surrounding the proposed project site was reduced from 1 mile to 2,000 feet. This does not meet the PCAPCD-recommended odor screening distances of 1 mile for sanitary landfills and 2 miles for composting facilities. Section 6.2.4 describes the existing setting for odors, including odor sources, odor controls already in place, odor notification reports received for the existing site, and other potential odor sources in the proposed project area. Odors from the site are part of the existing environment in the proposed project area, and it is not feasible to differentiate between existing odors that would continue in the future and future proposed project-related odors.

The WPWMA SWOP describes both the odor control measures that are currently being implemented and those that will be fully implemented as part of the proposed project. Odor control measures and BMPs

identified in the SWOP are listed in Table 6-1 and have been taken into consideration when determining significance. In addition to the odor control measures currently undertaken at the facility, the WPWMA will implement the SWOP to provide information about facility odor sources, meteorological conditions that have the potential to exacerbate the perception of odors, and the measures the WPWMA will take to reduce the potential for facility odors to be perceived by nearby receptors. The SWOP will be used as a tool by the WPWMA and its facility operators and contractors to reduce the potential for offsite odors. The SWOP is included in this DEIR as Appendix C.6 (WPWMA 2020c).

Construction of solid waste elements, complementary and programmatic elements, and supporting elements under Plan Concept 1 could result in odorous emissions from activities such as use of heavy-duty diesel equipment and the laying of fresh asphalt. However, these emissions would be intermittent and temporary and would dissipate with an increase in distance from the construction location(s). Construction under Plan Concept 1 would be implemented over approximately 30 years, but construction-related odors would not be limited to a single location or occur within proximity to offsite receptors for an extended period. The type and level of construction activity would be typical of new development at various locations on a large site, and associated odor sources would not remain in any one part of the proposed project area throughout all construction phases. Given the temporary and intermittent nature of odor-generating construction activities, construction of the project elements developed under the proposed project would not expose people to objectionable odors for an extended period.

The SWOP identifies four facilities or operations at the WPWMA facility with the greatest potential to produce odors: MRF building, composting operation, WRSL active landfill areas, and LFG collection and control system. Operation of these facilities and other solid waste elements and supporting elements under Plan Concept 1 could result in increases in odorous emissions. Ongoing efforts to prevent public nuisance and excessive odor impacts in nearby neighborhoods would continue under Plan Concept 1, including implementation of the odor BMPs listed in Table 6-1 and described in Section 6.2.4.2 to reduce the potential for odor from the MRF, landfill, LFG, ADC materials, composting, and other facility operations. The WPWMA would continue and expand these programs under the proposed project, as the levels of activity at the various solid waste management and supporting elements would increase over time under Plan Concept 1. The proposed improvements in organic waste composting technology (for example, transition from windrows to ASP composting) and the reduction in the quantity of organic materials landfilled would result in a beneficial impact for odors over the existing condition.

Various new commercial and industrial facilities developed as complementary and programmatic elements under the proposed project could potentially result in the siting of new sources of odors. Development may include research facilities, an LFG to compressed natural gas facility, or other compatible technologies. Because no specific projects or sites have been identified for such future uses, however, the degree of impact with respect to potential odors associated with future projects and their effects on adjacent receptors is uncertain. Emissions of odors from such facilities would be subject to PCAPCD's Rule 205, Nuisance, which prohibits the discharge of air contaminants or other materials that would cause detriment, nuisance, or annoyance to any number of people.

Implementation of the Waste Action Plan under Plan Concept 1 would address regional growth, regulatory changes, and other operational objectives, including ongoing and expanded odor control measures. The WPWMA would continue to monitor odor, implement effective odor control measures, and take advantage of advanced technologies as they become available and financially feasible. However, odor impacts are subjective, there are no quantifiable thresholds of significance. The effectiveness of odor control measures to be implemented by the WPWMA cannot be determined at this time, and odor impacts may remain after implementation of odor control measures. This impact would be significant.

Plan Concept 2

As described in Chapter 3, Project Description, the primary differences between Plan Concept 1 and Plan Concept 2 are related to where various facilities would be located on the WPWMA's property and when various facilities would be developed. These differences do not change the conclusions identified for Plan Concept 1. As such, impacts related to odors for implementation of Plan Concept 2 would be the same as described for Plan Concept 1.

Mitigation Measure 6-4: Implement Odor Reduction Measures.

The following odor reduction measures shall be implemented in addition to the BMPs and project design measures listed in Table 6-1 as mitigation measures for the proposed project:

- Conduct Annual Odor Emissions Testing and Implement Response Actions (Tier 1, Composting Operations).
- Increase Screening of LFG and Implement Response Actions (Tier 1, Landfill Operations). Quarterly screening for fugitive LFG shall be conducted to identify "hot spots" of LFG emissions through interim and final landfill covers. Such screening reduces the time between identification and repair of surface hot spot emissions, and thus odor.
- Enhance LFG Collection (Tier 1, Landfill Operations). To reduce landfill-related odor emissions, the WPWMA shall establish stricter protocols for LFG collection. Because LFG must be used, flared, or stored in a leak-free container, minimizing odorous emissions involves operating the system for maximum containment of gas as well as cost-effective performance of the gas-to-energy system.
- Implement Enhanced Monitoring and Modeling (Tier 1, Site-wide Technologies and Operations). To monitor odor emissions in areas around the WRSL, odor sensors shall be placed in developed areas surrounding the landfill to identify odor spikes or other abnormal odor emissions, ideally before community complaints are lodged. Updates to the WPWMA's dispersion modeling capabilities shall also be implemented to better predict the nature, location, and intensity of odor issues.
- Establish Tree-lined Perimeter of WRSL (Tier 1, Site-wide Technologies and Operations). Trees with aromatic foliage, such as pine or eucalyptus, shall be planted around the WRSL to visually screen the landfill from surrounding areas, providing psychological benefits, and to serve as a windbreak, thereby impeding, absorbing, or otherwise altering the flow of odorous emissions from the facility.
- Implement additional measures in accordance with the Odor Mitigation MOU (Churchwell White, LLP 2019; Schmidt and Card 2019).

Level of Significance after Mitigation.

The proposed project would implement numerous facility improvements, including more efficient waste management operations and odor-abatement strategies. However, the nature and effectiveness of these strategies are unknown, there are no quantifiable thresholds of significance for odor impacts, and there is no existing fee program or other mechanism by which to fund odor mitigation. This impact would remain significant after mitigation.

MRF Operations Design Concept Evaluation.

Proposed changes to MRF operations could be implemented under either Plan Concept and would potentially result in changes in project-related odors, primarily due to accelerated, expanded processes to sort and remove the organic fraction of the MSW (OFMSW) for composting in CASP composting systems. This would reduce the amount and organic content of waste residuals sent to the landfill. Diversion of

more OFMSW from the landfill within a faster timeframe would correspond to a near-term (next 10 years) reduction in LFG production, including reduced emissions of fugitive LFG. Additionally, the organic content of MRF fines used as ADC would be reduced, reducing the likelihood of odor generation from ADC application.

The OFMSW processes and composting would have the potential to increase odors, so additional odor control measures would be implemented. CASP composting systems would include covers on the composting piles to reduce odorous emissions, using either a membrane cover system (or similar), or a biolayer and positive ASP technology like that analyzed for the proposed project. If the aeration system for composting were changed to negative or reverse flow, a stand-alone biofilter for odor control would be installed and operated. Changes may also involve addition of an enclosed building for organics receipt and processing.

The PCAPCD recently issued permits to the WPWMA related to ASP composting; however, these permits would likely require updates as the project proceeds. The enclosed building for organics processing, if constructed, would be equipped with an odor control system that may require permitting by the PCAPCD as a stationary source. As the permitting process is undertaken, the facility must continue to comply with applicable regulatory and permitting requirements. As discussed with PCAPCD staff, implementation of the SWOP and OIMP, which PCAPCD intends to add to the operating permit for the WPWMA facility, should also reduce odors and the related odor notifications in the future (Springsteen, pers. comm., 2021).

Based on this qualitative review, the proposed MRF operations design concept changes would be covered under the current assumptions of this air quality impact analysis, and the conclusions of the project-level analysis related to odor impacts and mitigation would not change.

6.5 References

California Air Resources Board (CARB). 2015. *Risk Management Guidance for Stationary Sources of Air Toxics, California Air Pollution Control Officers Association*. July.

California Air Resources Board (CARB). 2016. *Ambient Air Quality Standards: California Standards and National Standards*. https://ww2.arb.ca.gov/sites/default/files/2020-07/aaqs2.pdf.

California Air Resources Board (CARB). 2018. 2018 *Updates to the California State Implementation Plan Adopted: October 25, 2018*. https://www.arb.ca.gov/planning/sip/2018sipupdate/2018update.pdf?_ga=2.37771747.1935489251.1625766811-1845188030.1570903355.

California Air Resources Board (CARB). 2020. Final Statement of Reasons for Rulemaking, Including Summary of Comments and Agency Response and Final Regulation Order, April 16, 2020. Incorporated the Initial Statement of Reasons (ISOR), Proposed 2019 Amendments to Area Designations for State Ambient Air Quality Standards, with Appendix C: Maps and Tables of Area Designations for State and National Ambient Air Quality Standards. https://ww3.arb.ca.gov/regact/2019/sad19/isorappc.pdf.

California Air Resources Board (CARB). 2021. *iADAM: Air Quality Data Statistics*. https://www.arb.ca.gov/adam/select8/sc8start.php.

California Department of Resources Recycling and Recovery (CalRecycle). 2020. "Odor Characteristics of Compostable Materials." https://www.calrecycle.ca.gov/swfacilities/compostables/odor/characteris.

California Department of Resources Recycling and Recovery (CalRecycle). 2021. "Composting Emissions and Air Permits." https://www.calrecycle.ca.gov/organics/air.

California Energy Commission (CEC). 2018. "2019 Building Energy Efficiency Standards". March. https://www.energy.ca.gov/programs-and-topics/programs/building-energy-efficiency-standards/2019-building-energy-efficiency.

California Integrated Waste Management Board (CIWMB). 2007. *Comprehensive Compost Odor Response Project*. In partnership with San Diego State University. March.

Churchwell White, LLP. 2019. Memorandum from Robin R. Baral to Clayton Cook of the Office of Placer County Counsel regarding Odor Mitigation for the Sunset Area Plan/Placer Ranch Specific Plan EIR (State Clearinghouse No. 2016112012). Sent on behalf of the Western Placer Waste Management Authority. Sacramento, CA. August 22.

Edgehill, Ian. 2018. "Odotech has been acquired by Envirosuite Limited." Odotech Blog. January. http://www.odotech.com/en/odotech-inc-has-been-acquired-by-envirosuite-limited/.

El Dorado County Air Quality Management District, Placer County Air Pollution Control District, Sacramento Metropolitan Air Quality Management District, and Yolo-Solano Air Quality Management District. 2013. *Proposed PM2.5 Implementation/Maintenance Plan and Redesignation Request for the Sacramento $PM_{2.5}$ Nonattainment Area*. October 24. http://www.ysaqmd.org/wp-content/uploads/Planning/Sac-Region-PM2.5-Maintenance-Plan.pdf.

El Dorado County Air Quality Management District, Feather River Air Quality Management District, Placer County Air Pollution Control District, Sacramento Metropolitan Air Quality Management District, and Yolo-Solano Air Quality Management District. 2017. *Sacramento Regional 2008 NAAQS 8-Hour Ozone Attainment and Reasonable Further Progress Plan*. July 24. http://www.airquality.org/ProgramCoordination/Documents/Sac%20Regional%202008%20NAAQS%20Attainment%20and%20RFP%20Plan.pdf.

Environmental Management Consulting (EMC). 2015. *Odor Assessment*. Cited in SCS Engineers 2017.

City of Sacramento. 2021. *Klotz Ranch Apartments Projects, Mitigation Monitoring Plan*. Prepared by Environmental Science Associates. January 27.

Golder Associates. 2017. *Joint Technical Document, Western Regional Sanitary Landfill Placer County, California, Volume I*. August.

Jacobs and WPWMA. 2020a. *Renewable Placer Air Dispersion and Health Risk Assessment Modeling Protocol*. May 25.

Jacobs and WPWMA. 2020b. *Renewable Placer Methodology for Air Quality and Greenhouse Gas Impact Analysis*. June 17.

Jacobs and WPWMA. 2021. *Renewable Placer Health Risk Assessment Modeling Report*. August 2.

Nortech Waste LLC. 2020. Nortech Incident Response System (NIRS). Roseville, CA. October 15.

Office of Environmental Health Hazard Assessment (OEHHA). 2015. *Risk Assessment Guidelines: Guidance Manual for Preparation of Health Risk Assessment*s. Air, Community, and Environmental Research Branch. February.

Placer County. 2013. *Countywide General Plan Policy Document*. Adopted August 16, 1994; reflects amendments through May 21, 2013. Auburn, CA.

Placer County, Community Development Resource Agency, Planning Services Division. 2018. *Draft Environmental Impact Report: Sunset Area Plan/Placer Ranch Specific Plan*. Auburn, CA. https://placerair.org/2702/Sunset-Area-Plan---Placer-Ranch-Specific.

Placer County, Community Development Resource Agency, Planning Services Division. 2019. *Final Environmental Impact Report for the Sunset Area Plan/Placer Ranch Specific Plan*. October. https://placerair.org/2702/Sunset-Area-Plan---Placer-Ranch-Specific.

Placer County. 2020. Placer County Conservation Program Final Environmental Impact Statement/Environmental Impact Report. May. (ICF 04406.04.) With technical assistance by ICF, San Francisco, CA.

Placer County Air Pollution Control District (PCAPCD). 2008. Policy Regarding Land Use Air Quality Mitigation Funds. December 11. https://www.placerair.org/DocumentCenter/View/2068/Land-Use-Air-Quality-Mitigation-Funds-Policy-PDF.

Placer County Air Pollution Control District (PCAPCD). 2016. California Environmental Quality Act Thresholds of Significance. Justification Report. October. https://www.placerair.org/DocumentCenter/View/2061/Threshold-Justification-Report-PDF.

Placer County Air Pollution Control District (PCAPCD). 2017a. CEQA Air Quality Handbook. November 21. https://www.placer.ca.gov/1801/CEQA-Handbook.

Placer County Air Pollution Control District (PCAPCD). 2017b. Cost-Effectiveness Amount for CEQA Mitigation and Amendment of "Review of Land Use Projects Under CEQA" Policy. Board Agenda #9. October 12. https://www.placerair.org/DocumentCenter/View/2069/Board-Memo-and-Policy-Amendment-PDF.

Placer County Air Pollution Control District (PCAPCD). 2021a. 2021 Board of Directors Handbook. https://www.placer.ca.gov/DocumentCenter/View/49805/2021-Directors-Handbook?bidId=.

Placer County Air Pollution Control District (PCAPCD). 2021b. District Off-Site Mitigation Fee Program. https://www.placerair.org/1806/District-Off-Site-Mitigation-Fee-Program.

Sacramento Metropolitan Air Quality Management District (SMAQMD). 2020. Guidance to Address the Friant Ranch Ruling for CEQA Projects in the Sac Metro Air District. Final. October. http://www.airquality.org/LandUseTransportation/Documents/SMAQMDFriantRanchFinalOct2020.pdf.

Schmidt, CE and TR Card. 2019. *Technical Report #2: Odor Mitigation Measures Related to Proposed Development within the WRSL Buffer Zone*. Letter memorandum to Robin Baral of Churchwell White, LLP. Red Bluff, CA. August 2.

SCS Engineers. 2017. Review of Odor Management at Western Regional Sanitary Landfill. Prepared for Ascent Environmental. November 9.

Springsteen, Bruce. 2021. Personal communication between Bruce Springsteen, Placer County Air Pollution Control District, and Pamela Vanderbilt, Jacobs. February 16.

United States Environmental Protection Agency (EPA). 2017. *Appendix W of 40 CFR Part 51—Guideline On Air Quality Models (Revised).* Office of Air Quality Planning and Standards, Research Triangle Park, North Carolina. January.

United States Environmental Protection Agency (EPA). 2017. "Determinations of Attainment by the Attainment Date, Determinations of Failure To Attain by the Attainment Date and Reclassification for Certain Nonattainment Areas for the 2006 24-Hour Fine Particulate Matter National Ambient Air Quality Standards." *Federal Register*. Vol. 82, No. 89, May 10.

United States Environmental Protection Agency (EPA). 2020. G*reen Book National Area and County-Level Multi-Pollutant Information*. California Nonattainment/Maintenance Status for Each County for All Criteria Pollutants. Data are current as of September 30, 2020. https://www3.epa.gov/airquality/greenbook/anayo_ca.html.

United States Environmental Protection Agency (EPA). 2021. *Monitor Values Report*. https://www.epa.gov/outdoor-air-quality-data/monitor-values-report.

Western Placer Waste Management Authority (WPWMA). 2018. *Odor Impact Minimization Plan: Western Placer Waste Management Authority Compost Facility*. Revised. April.

Western Placer Waste Management Authority (WPWMA). 2020a. *Renewable Placer: Waste Action Plan*. https://renewableplacer.com/.

Western Placer Waste Management Authority (WPWMA). 2020b. *Odor Impact Minimization Plan: Western Placer Waste Management Authority Compost Facility*. Revised. October.

Western Placer Waste Management Authority (WPWMA). 2020c. *Site Wide Odor Plan for the Western Placer Waste Management Authority's Solid Waste Processing and Disposal Facility*. Version 1.2. October.

Western Placer Waste Management Authority (WPWMA). 2020d. Landfill Gas and Leachate Management Standard Operating Procedures (SOPs). Draft. October.

7. Biological Resources

This chapter describes biological resources in the proposed project area and evaluates potential impacts on biological resources associated with Plan Concept 1 and Plan Concept 2. These two plan concepts include similar design elements, but the locations and characteristics of the elements vary between the two plans.

7.1 Environmental Setting

This section discusses the biological setting within the 928.5-acre proposed project area that includes three discrete properties: the eastern, center, and western properties. The proposed project area does not include the Fiddyment Road right of way. The proposed project area includes a range of natural, developed, and modified or disturbed land cover types that include aquatic resources and habitat for special-status plant and wildlife species. The assessment methodology and environmental conditions are detailed in the following sections.

7.1.1 Methodology

Baseline biological conditions were characterized by using desktop analysis and field surveys. Desktop analysis included a review of publicly available databases, existing reports, and other literature, as well as desktop mapping of aquatic resources outside the proposed project area. Field surveys included a reconnaissance wildlife survey and habitat assessment, rare plant surveys, and an aquatic resource delineation, as described in the following sections.

Background Literature and Database Review

Before conducting biological field surveys in 2017, a desktop review of available databases and other resources was performed to identify sensitive biological resources that may be affected by the proposed project. Sensitive resources include special-status plant and wildlife species, designated critical habitat, and potentially jurisdictional waters of the United States and the State of California. A species was considered to have special status if it met one or more of the following criteria:

- Listed, proposed, or candidate for listing as rare, threatened, or endangered under the Federal Endangered Species Act (FESA)
- Listed, proposed, or candidate for listing as rare, threatened, or endangered under the California Endangered Species Act (CESA)
- California Department of Fish and Wildlife (CDFW) – Fully Protected Species or Species of Special Concern (SSC)
- California Rare Plant Rank of 1A, 1B, 2A, and 2B by the California Native Plant Society (CNPS) in its online Inventory of Rare, Threatened, and Endangered Plants of California (CNPS 2021)

The following databases and other resources were reviewed before conducting the field surveys, and the database review was refreshed during the preparation of the environmental impact report (EIR):

- California Natural Diversity Database (CNDDB) species occurrences within 5 miles of the proposed project area (CDFW 2021a; Figures 7-1a and 7-1b)
- U.S. Fish and Wildlife Service (USFWS) Information for Planning and Consultation (USFWS 2021a)
- (CNPS Inventory of Rare and Endangered Plants of California (CNPS 2021) for the Roseville U.S. Geological Survey (USGS) 7.5-minute quadrangle and the eight surrounding quadrangles: Sheridan, Lincoln, Gold Hill, Pleasant Grove, Rocklin, Rio Linda, Citrus Heights, and Folsom.

- Soil maps and descriptions (NRCS 2021a; 2021b)
- USGS topographic maps (USGS 2021)
- National Hydrography Dataset (USGS 2021)
- USFWS National Wetlands Inventory (USFWS 2021b)

Reconnaissance Surveys

A joint habitat assessment survey and reconnaissance wildlife survey were conducted in May and June 2017 to characterize and document the existing wildlife resources in the proposed project area and evaluate the potential for special-status wildlife species to occur, including active and inactive nesting sites for birds that are protected under the Migratory Bird Treaty Act (MBTA) or with special state or federal listing status. The assessment consisted of a visual survey and transect pedestrian surveys of the eastern, center, and western properties of the proposed project. Surveys were conducted with binoculars and a spotting scope to determine nest activity. Vegetation was systematically viewed from various angles to determine wildlife usage, with a specific focus on nesting activity. No species-specific or protocol surveys were conducted.

Focused Surveys

Botanical Survey.

Botanical surveys were conducted in May and June 2017 by walking meandering transects across the proposed project area, with more focused surveys in vernal pools and seasonal wetland habitats. Developed sites (including landscaped or highly disturbed vegetation around residential and farm buildings, parking lots, and other developed areas, as well as cultivated alfalfa fields) were not included in the surveys. The botanical surveys were floristic and comprehensive, meaning that all plants observed were identified to the taxonomic level necessary to determine whether they had any conservation status. Species that were not immediately identifiable to the surveyors were collected and later identified, using *The Jepson Manual: Vascular Plants of California* (Baldwin et al. 2012). Information on the number of plants, phenology, habitat, and location of special-status plants was noted during the survey, and the locations were mapped by using iPad data collectors with Trimble Global Positioning System (GPS) receivers.

Aquatic Resource Delineation.

An aquatic resource delineation of the proposed project area was conducted in late spring 2017. The delineation methodology followed the *Corps of Engineers Wetlands Delineation Manual* (Environmental Laboratory 1987) and the *Regional Supplement to the Corps of Engineers Wetland Delineation Manual: Arid West Region* (U.S. Army Corps of Engineers 2008). Information on vegetation, soils, and hydrology for wetlands and adjacent uplands within the proposed project area was recorded on wetland determination data sheets. Long-term rainfall conditions, as well as seasonal rainfall, site drainage, landscape position, general site topography, and land use, were considered while making wetland hydrology determinations.

Wetland boundaries were determined based on notable changes in vegetation as well as micro-topography. Once a wetland boundary was identified, a Trimble Geo XH GPS or iPad data collector with Trimble GPS receivers was used to map the boundary. Both mapping systems have post-processed submeter accuracy.

The wetland delineation has not yet been verified by the U.S. Army Corps of Engineers (USACE). In 2021, aquatic resources within 250 feet from the proposed project area perimeter were mapped as a desktop exercise, using a combination of aerial imagery and topographic data. The purpose of mapping resources outside the proposed project area was to approximate indirect impacts to aquatic resources in the immediate vicinity of the proposed project, as a result of project construction.

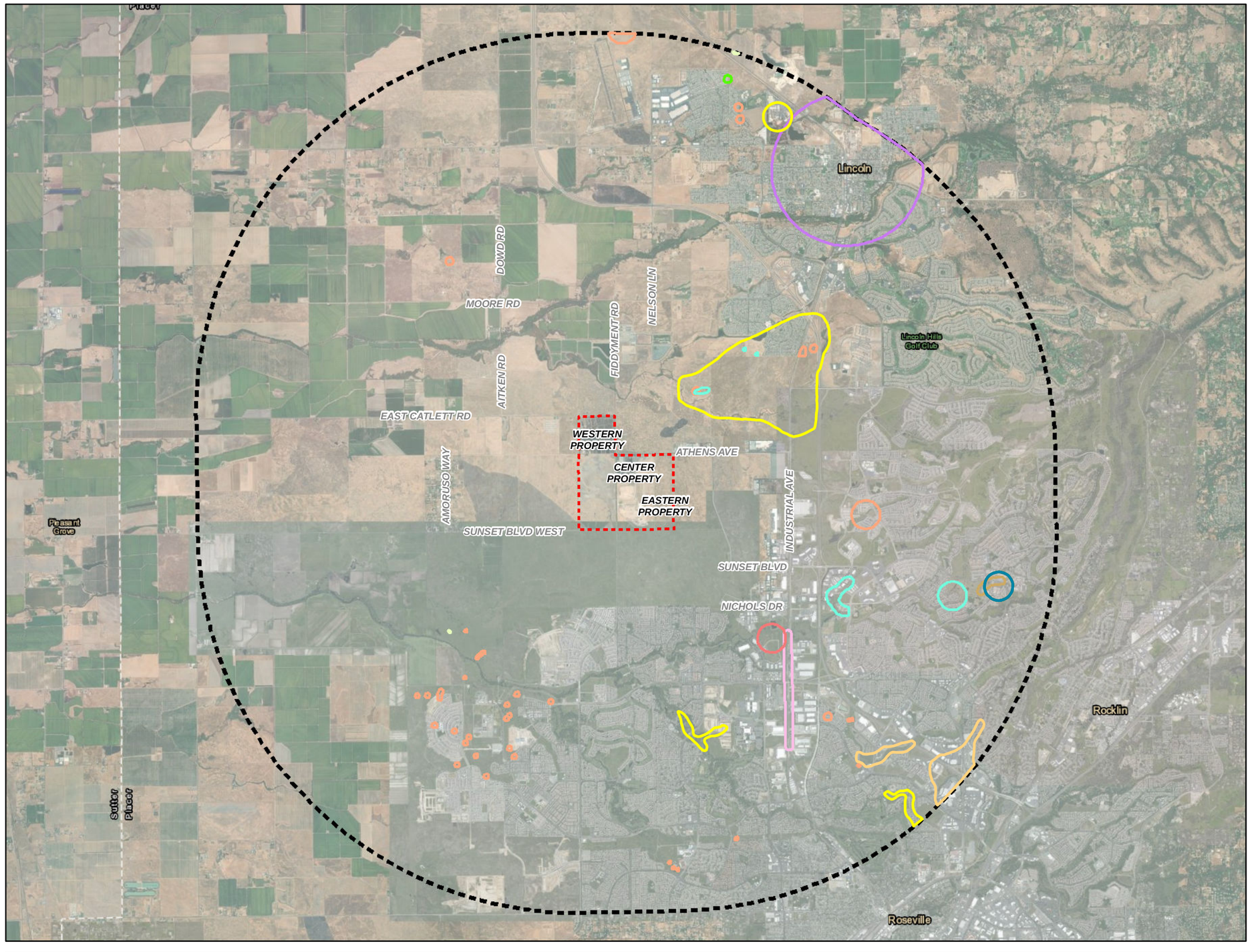

VICINITY MAP

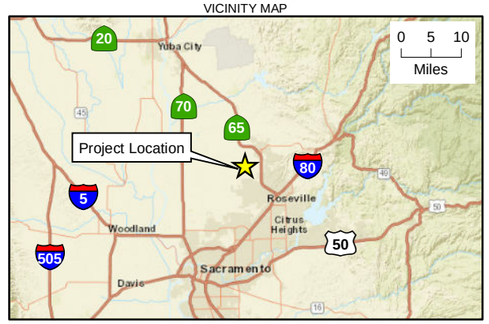

LEGEND

- 5-mile Radius of Project Boundary
- Project Boundary (928.5 acres)

CNDDB Occurrences Within 5 Miles

Plant Species

- Ahart's dwarf rush
- Big-scale balsamroot
- Boggs Lake hedge-hyssop
- Dwarf downingia
- Hispid salty bird's-beak
- Legenere
- Pincushion navarretia
- Red Bluff dwarf rush

Sensitive Natural Communities

- Alkali Meadow
- Alkali Seep
- Northern Hardpan Vernal Pool
- Northern Volcanic Mud Flow Vernal Pool

CNDDB Results as of January 2021

N

0 1.5 3
Miles

Figure 7-1a. CNDDB Plant Species Occurrences Within 5 Miles of the Proposed Project
Draft Environmental Impact Report
Renewable Placer: Waste Action Plan
Placer County, California

Jacobs

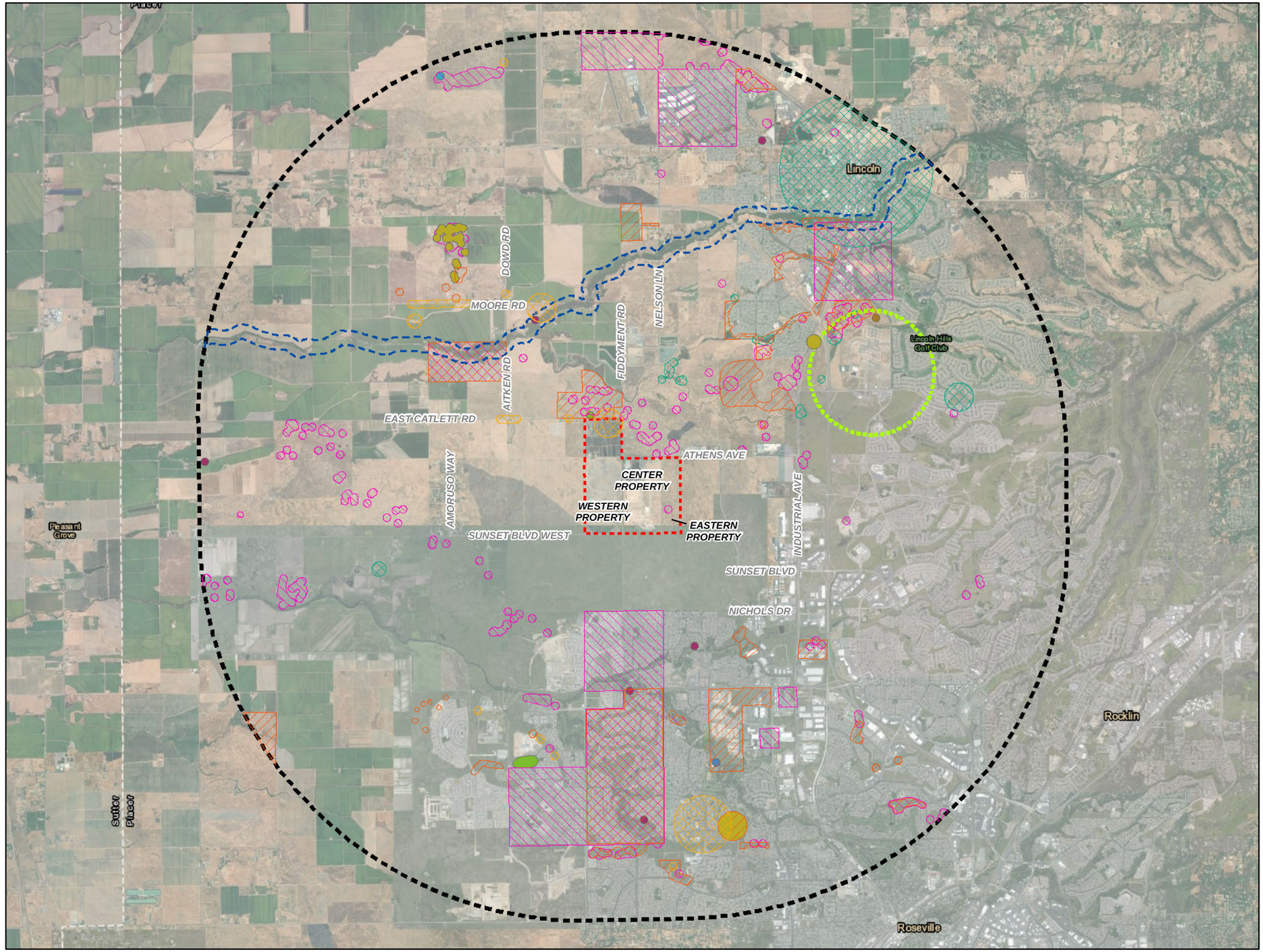

VICINITY MAP

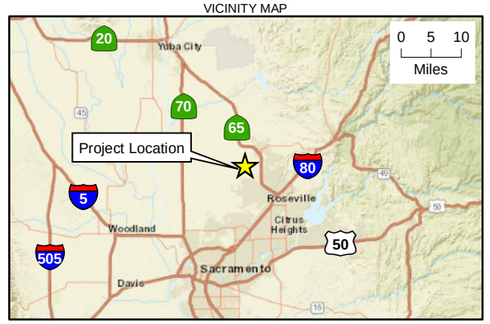

LEGEND

- 5-mile Radius of Project Boundary
- Project Boundary (928.5 acres)

CNDDB Occurrences Within 5 Miles

Animal Species

- Burrowing owl
- California linderiella
- Conservancy fairy shrimp
- Grasshopper sparrow
- Ricksecker's water scavenger beetle
- Steelhead - Central Valley DPS
- Swainson's hawk
- Tricolored blackbird
- Vernal pool fairy shrimp
- Vernal pool tadpole shrimp
- Western spadefoot
- White-tailed kite

CNDDB Results as of January 2021

N

0 1.5 3
Miles

Figure 7-1b. CNDDB Animal Species Occurrences Within 5 Miles of the Proposed Project
Draft Environmental Impact Report
Renewable Placer: Waste Action Plan
Placer County, California

Jacobs

\\dc1vs01\GISProj\W\WPWMA\Maps\Report\WPWMA_BRAR_2020\Fig7-1b_CNDDB_animals.mxd 7/21/2021

7.1.2 Climate

The proposed project is located in the Sacramento Valley, which is relatively flat terrain bordered by mountain ranges to the east, west, and north. The climate is characterized by hot, dry summers and cool, rainy winters, sometimes with periods of dense fog, most often between winter storms. In the Sacramento Valley, there is little ocean influence on climate, giving the interior Mediterranean climate's more seasonal temperature variation (Ahrens 2003).

Hot, dry summers tend to cause rapid drying of surface water throughout the region. The climate, coupled with a hardpan layer underlying soils (see Section 7.1.3), creates suitable conditions for the formation of vernal pools. When rain fills the pools in the winter and spring, the water collects and remains in the depressions. In the springtime, surface water gradually evaporates until the pools are completely dry by the summer and fall.

7.1.3 Soils and Topography

The proposed project is located along the eastern edge of the Hardpan Terraces subsection of the Great Valley Ecological Section (Miles and Goudey 1997). The Hardpan Terraces subsection features terraces along the eastern edge of the Sacramento and San Joaquin valleys composed predominantly of Pleistocene alluvium derived from granitic, sedimentary, volcanic, and metamorphic sources. The landscape is characterized by gently sloping terraces with small floodplain areas and alluvial fans along the rivers and streams flowing from the Sierra Nevada mountains westward into the Sacramento and San Joaquin Rivers. Elevations throughout the proposed project area range between 106 and 134 feet above mean sea level.

Several soil types in the Sacramento Valley have dense subsurface clay and hardpan layers that impede water percolation and may become seasonally saturated. These soils often support wetlands, commonly vernal pool wetlands, when found in topographic depressions that hold water into the dry season.

7.1.4 Hydrology

The proposed project area is located within the Auburn Ravine and Pleasant Grove Creek-Cross Canal watersheds (USGS 2021). The watersheds collectively drain approximately 189 square miles. The Auburn Ravine watershed drains to the East Side Canal in southeastern Sutter County, and the Pleasant Grove Creek-Cross Canal watershed empties into the Cross Canal and then into the Sacramento River (Placer County 2017).

Within the proposed project area, natural hydrology is primarily influenced by precipitation forming seasonal vernal pool and vernal swale complexes in topographic depressions across the relatively flat landscape. Altered local hydrology includes the excavation and formation of deeper ponded areas, irrigated wetlands in the southwestern property, and constructed vernal pool habitat (constructed as mitigation for prior development) in the southwestern corner of the center property.

7.1.5 Land Cover Types

Overview

As mentioned previously, the proposed project area consists of three discrete properties, totaling 928.5 acres, and does not include the Fiddyment Road right of way. The northwestern and southwestern parts of the western property were characterized independently for biological resources, because of their discrete differences in land use and the habitats present. The southwestern area is currently leased to the City of Lincoln for discharge of reclaimed water. The southwestern area consists of agricultural land (pivot-irrigated alfalfa [*Medicago sativa*]) and non-native grasslands that are periodically mowed and baled. Other land

cover types on this property include agricultural irrigation ponds, swales, and irrigated wetlands. The northwestern area is mostly non-native grassland. Much of the northwestern property appears to be regularly disturbed by burns and tilling, based on disked and furrowed roads and aerial photographs taken between 1993 and 2016 (Google Earth 2021).

The center property includes the Western Regional Sanitary Landfill (WRSL) and associated solid waste infrastructure. The southwestern corner of the center property is a small area dominated by non-native grassland with constructed mitigation wetlands (vernal pools) scattered throughout. A few elderberry shrubs (*Sambucus nigra*), the host plant for the federally listed valley elderberry longhorn beetle (*Desmocerus californicus dimorphus*), are present in this part of the center property.

The eastern property is undeveloped land characterized by a mosaic of seasonal wetlands (including vernal pools) and swales. A few mature trees are located along the eastern property boundary adjacent to the WRSL. A motocross track, covering approximately 16 acres of the central part of the eastern property, was in operation for a few years starting in 2006 but has been inactive for many years. The eastern property is currently used for seasonal cattle grazing.

Descriptions of the terrestrial and aquatic land cover types and land use within the proposed project area are provided in the following sections and presented in Table 7-1 and on Figure 7-2. Aquatic land cover types mapped within the 250-foot proposed project area buffer are presented on Figure 7-3.

Table 7-1. Land Cover Types and Acreage within the Proposed Project Area

Land Cover Type	Center Property (acres)	Western Property (acres)	Eastern Property (acres)	Total (acres)
Terrestrial Land Cover Types				
Developed	58.3	7.0	0	**65.3**
Western Regional Sanitary Landfill	-	-	-	-
Vegetated Landfill Cover	168.8	0	0	**168.8**
Bare Ground	62.7	0	0	**62.7**
Non-native Annual Grassland	20.1	259.4	147.0	**426.5**
Eucalyptus Woodland	0	1.0	0	**1.0**
Agricultural	0	181.5	0	**181.5**
Aquatic Land Cover Types				
Vernal Pools	0.3	1.3	3.3	**4.9**
Non-Vernal Pool Seasonal Wetlands	0.6	0.9	2.1	**3.6**
Swales	0	4.5	6.2	**10.7**
Irrigation Ponds	0	2.5	0	**2.5**
Irrigated Wetlands	0	1.0	0	**1.0**
Total				**928.5**

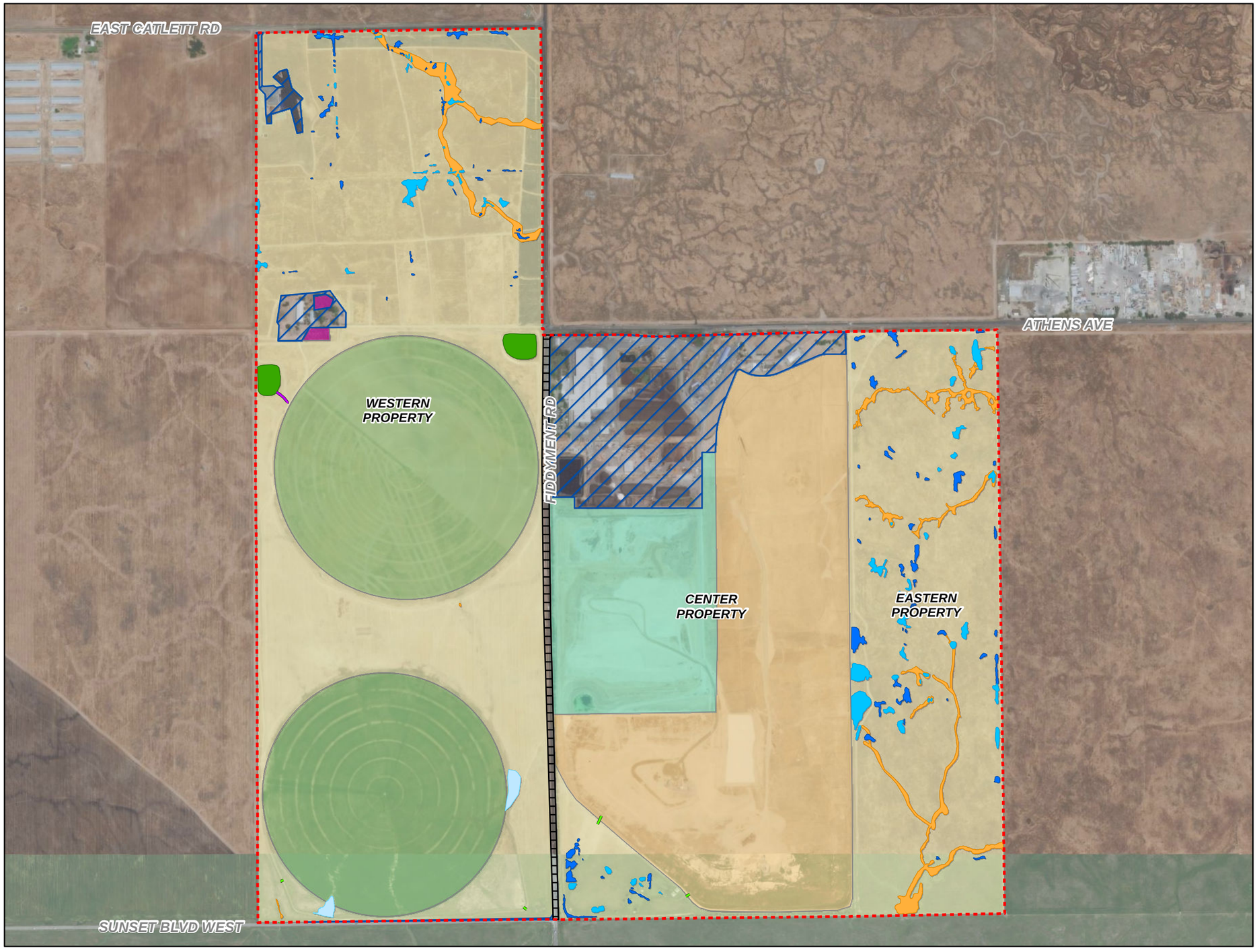

VICINITY MAP

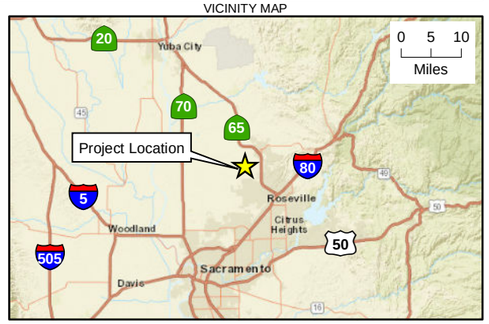

LEGEND

- Project Boundary (928.5 acres)
- Culvert
- Ditch
- Fiddyment Road Right-of-Way

Aquatic Land Cover

- Irrigated Wetland (1.0 acre)
- Irrigation Pond (2.5 acres)
- Seasonal Wetland (3.6 acres)
- Swale (10.7 acres)
- Vernal Pool (4.9 acres)

Terrestrial Land Cover

- Developed (65.3 acres)
- Agricultural (181.5 acres)
- Bare Ground (62.7 acres)
- Eucalyptus Woodland (1.0 acre)
- Non-native Annual Grassland (426.5 acres)
- Vegetated Landfill Cover (168.8 acres)

N

0 1,000 2,000
Feet

Figure 7-2. Land Cover Types
Draft Environmental Impact Report
Renewable Placer: Waste Action Plan
Placer County, California

Jacobs

\\dc1vs01\GISProj\W\WPWMA\Maps\Report\WPWMA_BRAR_2020\Fig7-2_Land_Cover_Types.mxd 7/21/2021

VICINITY MAP

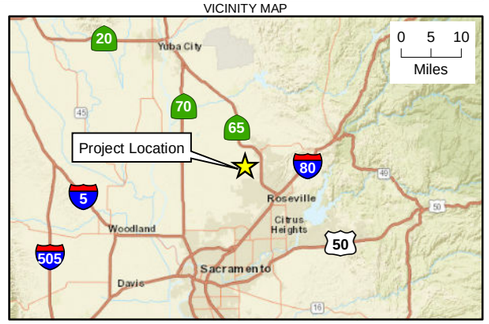

LEGEND

- Project Boundary (928.5 acres)
- 250-foot Project Area Buffer

Aquatic Land Cover

- Vernal Pool Type Seasonal Wetland (7.4 acres)
- Onsite Vernal Pool Immediate Watershed (55 acres)
- Offsite Vernal Pool Immediate Watershed (189 acres)

N

0 1,000 2,000
Feet

Figure 7-3. Offsite Aquatic Resources
Draft Environmental Impact Report
Renewable Placer: Waste Action Plan
Placer County, California

Jacobs

\\Dc1vs01\gisproj\W\WPWMA\Maps\Report\WPWMA_BRAR_2020\Fig7-3_offsite_Aquatic_Resources.mxd 7/29/2021

Terrestrial Land Cover Types

Terrestrial land cover types in the proposed project area include developed areas, the WRSL, non-native annual grassland, eucalyptus woodland, and agricultural areas (Table 7-1 and Figure 7-2).

Developed.

Besides paved roadways, most of the developed land cover occurs in the center property, associated with the existing Western Placer Waste Management Authority (WPWMA) facilities. Much of this area is hardscaped with buildings, parking lots, and other infrastructure. Some small areas of landscaped and ruderal vegetation occur throughout the facility. The compost areas east and south of the MRF building are also considered developed land cover types. Small developed areas on the western property include a parking lot and a radio-controlled model airplane runway in the northwestern corner and a farm residence toward the center of the property.

Developed areas may be used by birds and small mammals commonly associated with landscaped trees, shrubs, or human-made structures. Waterfowl may use the constructed retention pond in the compost area, when full, as stopover habitat during migration.

Western Regional Sanitary Landfill.

Although the WRSL within the center property is technically a constructed land cover type, it provides different habitat functions from the developed land cover described previously. The WRSL includes areas where the surface soil is approximately 1 to 3 feet deep, and where herbaceous vegetation is in various stages of establishment. Vegetated landfill areas were not included in the field surveys but appear to be dominated by non-native annual grassland (see the description of non-native annual grassland that follows). The WRSL also includes areas of bare ground where earthwork and related activities are ongoing.

Non-native Annual Grassland.

Non-native annual grassland, the most common and widespread plant community in the proposed project area, is characterized by naturalized (that is, introduced species that are now typical of the climax community) annual grasses, including medusahead (*Elymus caput-medusae*), ripgut brome (*Bromus diandrus*), soft brome (*Bromus hordeaceus*), Italian ryegrass (*Festuca perennis*), annual fescue (*Festuca myuros*), slender oat (*Avena barbata*), and hare barley (*Hordeum murinum* ssp. *leporinum*). Common naturalized forbs include longbeak stork's bill (*Erodium botrys*), rose clover (*Trifolium hirtum*), vetch (*Vicia sativa* and *V. villosa*), prickly lettuce (*Lactuca serriola*), and lesser hawkbit (*Leontodon saxatilis*). Scattered native forbs include white brodiaea (*Triteleia hyacinthina*), ookow (*Dichelostemma congestum*), and valley tassels (*Castilleja attenuata*). The grasslands found in the proposed project area include Wild Oat Grasslands - *Avena* (*barbata*, *fatua*) Semi-Natural Herbaceous Stands and Annual Brome Grasslands – *Bromus* (*diandrus*, *hordeaceus*) – *Brachypodium distachyon* Semi-Natural Herbaceous Stands, and *Lolium perenne* Semi-Natural Herbaceous Stands (perennial ryegrass fields), as described in *A Manual of California Vegetation* (Sawyer et al. 2009). Aquatic habitats, including vernal pools, seasonal wetlands, and swales, described in the next section, occur throughout annual grasslands.

Eucalyptus Woodland.

There are two relatively small groves of manna gum (*Eucalyptus viminalis*) composed of large, mature trees near the farm residence toward the center of the western property. These woodland areas are classified as *Eucalyptus* Semi-Natural Woodland Stands (Sawyer et al. 2009).

Agricultural.

Parts of the eastern and western properties support agricultural land uses. The land uses include irrigated alfalfa fields and grasslands that support wheat (*Triticum aestivum*) and non-native grass species such as wild oat, Italian ryegrass, and hood canary grass (*Phalaris paradoxa*) in the western property. The alfalfa fields and surrounding grassland are actively managed, cut in the spring for forage and hay, and constitute irrigated wetlands in some areas. Non-native annual grassland on the eastern property is seasonally grazed by cattle.

Aquatic Land Cover Types

Wetlands and other aquatic resources mapped in the proposed project area and 250-foot project area buffer include vernal pools, seasonal wetlands, swales, irrigation ponds, and irrigated wetlands (Tables 7-1 and 7-2). The distribution of aquatic resources and land cover types is shown on Figure 7-2 and 7-3.

Vernal Pool Complex.

As defined in the Sunset Area Plan (SAP), vernal pool complex is the term used to characterize land cover types or vernal pool constituent habitats that occur in such an integrated mosaic that they cannot be reliably distinguished or that are highly variable in extent (Placer County, 2019). Vernal pool complex overlaps with habitat (primarily non-native annual grassland) that is considered part of the vernal pool immediate watershed. The Placer County Conservation Program (PCCP) defines the vernal pool immediate watershed as the upland area surrounding, and hydrologically connected to, an individual delineated vernal pool complex constituent habitat (vernal pool, seasonal wetland, or swale). Unless demonstrated otherwise, the vernal pool immediate watershed is considered to extend outward from the wetted perimeter by a default distance of 250 feet (Placer County 2020a). The key constituent habitats for a vernal pool complex are three wetland types that provide vernal pool habitat functions: vernal pools, non-vernal pool seasonal wetlands, and seasonal swales. Together, these three wetland types are termed "vernal pool-type wetlands." Aquatic resources delineated within the 250-foot project area buffer are collectively characterized as vernal pool-type wetlands, since they could not be further differentiated during the desktop delineation. Aquatic resources in the 250-foot project area buffer are likely a mix of vernal pools, non-vernal pool seasonal wetlands, and seasonal swales, as described in the following sections.

Vernal Pools.

The biological characteristics of vernal pools are determined by a combination of specific climatic, soil, hydrologic, and topographic conditions. Endemic vernal pool species evolved in and are adapted to carry out their entire lifecycle in vernal pool wetlands. Vernal pool wetlands within the proposed project area include natural depressional basins, constructed mitigation pools (southwestern corner of the center property), as well as some areas associated with compacted roads that were characterized by similar vegetation. Vernal pools range from small, relatively shallow depressions to large basins deep enough to remain inundated until later in the summer. Vegetation around the outer edges of vernal pool basins is typically characterized by naturalized species such as Mediterranean barley, Italian ryegrass, lesser hawkbit, and hyssop loosestrife. The central and deeper areas of vernal pool basins are characterized by native species such as vernal pool buttercup (*Ranunculus bonariensis*), popcorn flower (*Plagiobothrys* spp.), goldfields (*Lasthenia* spp.), downingia (*Downingia* spp.), woolly marbles (*Psilocarphus brevissimus*), coyote thistle (*Eryngium castrense*), toad rush (*Juncus bufonius*), and creeping spikerush (*Eleocharis macrostachya*).

Non-Vernal Pool Seasonal Wetlands.

Non-vernal pool seasonal wetlands include small, relatively shallow natural depressional basins and areas along compacted roadways that are seasonally inundated, and other created depressions that have developed wetland characteristics. Unlike vernal pools, non-vernal pool seasonal wetlands are characterized almost entirely by non-native vegetation such as Italian ryegrass, Mediterranean barley, hyssop loosestrife, curly dock, and lesser hawkbit. On occasion, vernal pool buttercup is present in deeper parts of these features, but other native vernal pool plants are absent.

Swales.

Swale wetlands were mostly observed as weakly expressed topographic features that were evident to various degrees in the field. Swale complexes that occur in the eastern and western properties are linear, topographic depressions that appear to convey surface water for short durations in response to heavy rainfall. In some instances, these swales either contain vernal pools and seasonal wetlands or convey surface water into or out of these features. Vegetation throughout the swales includes lesser hawkbit, Mediterranean barley, Italian ryegrass, and toad rush. An exception includes deeper swales leading to the culverts at Fiddyment Road and East Catlett Road. Notable scouring near the northern culvert in the western property at East Catlett Road and aerial imagery of the site (Google Earth 2021) suggest that water at least occasionally flows through this swale.

Ponds.

The two constructed ponds in the western property on the northern side of the irrigated alfalfa fields are used to hold irrigation water and appear to dry later in the season after the fields have been harvested. Vegetation around the water's edge at the time of the survey included Italian ryegrass, Mediterranean barley, hyssop loosestrife, smooth goldfields, popcorn flower, creeping spikerush, and water pygmy weed (*Crassula aquatica*).

Irrigated Wetlands.

Irrigated wetlands in the western property appear to have developed as the result of long-term alfalfa cultivation. The irrigated wetland in the southwestern corner of the property is characterized by creeping spikerush, vernal pool buttercup, manna grass (*Glyceria x occidentalis*), and Italian ryegrass. There is also an irrigated wetland on the eastern side of the southern alfalfa field, where vegetation includes manna grass, Italian ryegrass, Mediterranean barley, tall nutsedge (*Cyperus eragrostis*), hyssop loosestrife, annual blue grass (*Poa annua*), with some popcorn flower and annual hair grass (*Deschampsia danthonioides*).

Several small, excavated drainages occur in the proposed project area, but their acreage is nominal.

7.1.6 Special-Status Plant and Wildlife Species

The potential for special-status species to occur in or adjacent to the proposed project area was evaluated according to the following criteria:

- **Present** – Reconnaissance-level or focused surveys documented the occurrence or observation of a species in the survey area.
- **Seasonally present** – Individuals were observed in the survey area but are only present in the area during certain times of the year.

- **Likely to occur** – The species has a strong likelihood to be found in the survey area prior to or during construction but has not been directly observed to date during project surveys. The likelihood that a species may occur is based on the following considerations:
  - Suitable habitat that meets the life history requirements of the species is present on or near the survey area.
  - Migration routes or corridors are near or within the survey area.
  - Records of sighting are documented on or near the survey area.
  - There is an absence of invasive predators.

  The main assumption is that records of occurrence have been documented within or near the survey area, the survey area falls within the range of the species, suitable habitat is present, but it is undetermined whether the habitat is currently occupied.
- **Potential to occur** – There is a possibility that the species can be found in the survey area prior to or during construction but has not been directly observed to date. The likelihood that a species may occur is based on the following conditions:
  - Suitable habitat that meets the life history requirements of the species is present on or near the survey area
  - Migration routes or corridors are near or within the survey area.
  - There is an absence of invasive predators.

  The main assumption is that the survey area falls within the range of the species, suitable habitat is present, but no records of sighting are located in or near the survey area and it is undetermined whether the habitat is currently occupied.
- **Unlikely to occur** – The species is not likely to occur in the survey area based on the following considerations:
  - There is a lack of suitable habitat and features that are required to satisfy the life history requirements of the species (for example, absence of foraging habitat, lack of reproductive areas, and lack of sheltering areas).
  - Presence of barriers to migration or dispersal exists.
  - Presence of predators or invasive species that inhibit survival or occupation occurs.
  - There is a lack of hibernacula, hibernation areas, or estivation areas onsite.
- **Absent** – Suitable habitat does not exist in the survey area, the species is restricted to or known to be present only within a specific area outside of the survey area, or focused surveys did not detect the species.

Special-Status Plants.

Table 7-2 lists the special-status plant species known to occur in the vicinity (within 5 miles) of the proposed project, and Figure 7-1a shows the CNDDB records of special-status plants within the 5-mile radius of the proposed project.

Special-Status Wildlife.

Table 7-3 lists the special-status animal species known to occur in the vicinity (within 5 miles) of the proposed project, and Figure 7-1b shows the CNDDB records of special-status animals within a 5-mile radius of the proposed project.

Table 7-2. Special-Status Plant Species Known to Occur in the Vicinity of the Proposed Project

Scientific Name	Common Name	Status				Habitat Requirements	Potential for Occurrence
		Federal	State	CDFW	CNPS		
Balsamorhiza macrolepis	Big scale balsamroot	-	-	-	1B.2	Chaparral, cismontane woodland, and valley and foothill grassland, often on serpentinite soils; 295 to 4,600 feet elevation; blooms March–June.	**Unlikely to Occur.** Suitable habitat (grassland) is present in the proposed project area, though the project is below the expected elevation range for the species. Although not restricted to serpentine soils, the lack of these soils makes the species unlikely to occur. There are two CNDDB occurrences within 5 miles of the project, though both are unverified, historical occurrences. The species was not found during floristic surveys.
Brodiaea rosea ssp. *vallicola*	Valley brodiaea	-	-	-	4.2	Valley and foothill grassland (swales), vernal pools. Old alluvial terraces. Silty, sandy, and gravelly loam; 33 to 1,100 feet elevation; blooms April–May.	**Unlikely to Occur.** Suitable habitat (grasslands, swales, vernal pools) is present within the proposed project area. However, there are no CNDDB occurrences within Placer County, and the species was not found during floristic surveys.
Chloropyron molle ssp. *hispidum*	Hispid bird's-beak	-	-	-	1B.1	Alkaline meadows and seeps, in playas and valley and foothill grassland below 500 feet elevation; blooms June–September.	**Absent.** There is no suitable meadow or seep habitat in proposed project area. The species was not found during floristic surveys.
Clarkia biloba ssp. *brandegeeae*	Brandegee's clarkia	-	-	-	4.2	Often found in roadcuts. Found in chaparral, cismontane woodland, and lower montane coniferous forest; 246 to 3,000 feet elevation; blooms May–July.	**Absent.** No suitable chaparral, woodland, or lower montane forest habitat is present in the proposed project area. The species was not found during floristic surveys.
Downingia pusilla	Dwarf downingia	-	-	-	2.2	Found in vernal pools or seasonal wetland valley and grassland habitats; below 1,500 feet in elevation; blooms March–May.	**Present.** Suitable habitat is present in proposed area. A population of the species, with several hundred plants, was observed on the eastern property in vernal pool habitat during floristic surveys.

Table 7-2. Special-Status Plant Species Known to Occur in the Vicinity of the Proposed Project

Scientific Name	Common Name	Status				Habitat Requirements	Potential for Occurrence
		Federal	State	CDFW	CNPS		
Fritillaria agrestis	Stinkbells	-	-	-	4.2	Grows in heavy soils, particularly clay, sometimes serpentinite. Prefers dry shade, such as under an oak canopy, chaparral, cismontane woodland, Pinyon and juniper woodland, valley and foothill grassland; 30 to 5,100 feet elevation; blooms March–June.	**Absent.** No suitable habitat is present in proposed area, which lacks heavy clay soils. Species was not found during floristic surveys.
Gratiola heterosepala	Boggs Lake hedge-hyssop	-	E	-	1B.2	Found in clay soils in or near shallow water, such as at the margins of lakes and vernal pools; grows in mud and very shallow water, such as the edges of vernal pools; 10 to 7,900 feet elevation; blooms April–August.	**Unlikely to Occur.** Suitable vernal pool habitat is present in the proposed project area. There are two CNDDB occurrences within 5 miles of the project, with species associations known to occur within the proposed project area (*Plagiobothrys stipitatus, Downingia bocornuta, Lasthenia fremontii, Downingia pusilla*). However, the species was not found during floristic surveys.
Juncus leiospermus var. *ahartii*	Ahart's dwarf rush	-	-	-	1B.2	Vernal pools and swales in areas of low cover of competing vegetation; most often on gopher turnings along margins of pools (Witham 2006). Soils underlying the pools typically are acidic clays; 95 to 750 feet elevation; blooms March–May.	**Unlikely to Occur.** Suitable vernal pool habitat is present in the proposed project area; however, the proposed project area lacks acidic soils. One CNDDB occurrence is within 5 miles of the project, in an area that has since been developed into a residential subdivision. Species was not found during floristic surveys.
Juncus leiospermus var. *leiospermus*	Red Bluff dwarf rush	-	-	-	1B.1	Vernal pools, meadows and seeps, and other seasonally wet habitats; 115 to 3,500 feet elevation; blooms March–May.	**Unlikely to Occur.** Suitable vernal pool habitat is present in the proposed project area. One CNDDB occurrence from 1982 is within 5 miles of the project; however, researchers believe the occurrence may be a misidentification. Species was not found during floristic surveys.

Table 7-2. Special-Status Plant Species Known to Occur in the Vicinity of the Proposed Project

Scientific Name	Common Name	Status				Habitat Requirements	Potential for Occurrence
		Federal	State	CDFW	CNPS		
Legenere limosa	Legenere	-	-	-	1B.1	Relatively deep and wet vernal pools (Witham 2006); below 3,000 feet elevation; blooms April–June.	**Unlikely to Occur.** Suitable vernal pool habitat is present in the proposed project area, and the species was observed during 2013 surveys conducted in support of the proposed Antonio Mountain Ranch mitigation bank site, north of and across Athens Avenue from the eastern property (Placer County 2017). However, species was not found during floristic surveys.
Leptosiphon acicularis	Bristly leptosiphon	-	-	-	4.2	Chaparral, cismontane woodland, coastal prairie, valley and foothill grassland; 180 to 4,921 feet elevation; blooms April–July.	**Unlikely to Occur.** Suitable grassland habitat is present within the proposed project area. However, there are no CNDDB occurrences within Placer County, and the species was not found during floristic surveys.
Navarretia myersii ssp. *myersii*	Pincushion navarretia	-	-	-	1B.1	Vernal pools. Often found in acidic soils; 65 to 750 feet elevation; blooms in May.	**Unlikely to Occur.** Suitable vernal pool habitat is present in the proposed project area. One unverified historical CNDDB occurrence is within 5 miles of the project. Species was not found during floristic surveys.
Navarretia nigelliformis ssp. *nigelliformis*	Adobe navarretia	-	-	-	4.2	Heavy clay soils of vernal pools and other low, seasonally moist areas in grasslands. Sometimes on serpentine soils. Sierra Nevada foothills, the Central Valley, and the inner South Coast Ranges, between 325 and 3,300 feet elevation; blooms April–June.	**Absent.** No suitable habitat is present in the proposed project area. The proposed project area lacks heavy clay soils and is outside the species' known elevational range. Species was not found during floristic surveys.
Orcuttia viscida	Sacramento Orcutt grass	E	E	-	1B.1	Endemic to Sacramento County, California, where it grows only in vernal pools; 95 to 325 feet elevation; blooms April–July.	**Absent.** Suitable vernal pool habitat is present in the proposed project area; however, the project is outside the known range for the species (Sacramento County). Species was not observed during floristic surveys.

Table 7-2. Special-Status Plant Species Known to Occur in the Vicinity of the Proposed Project

Scientific Name	Common Name	Status				Habitat Requirements	Potential for Occurrence
		Federal	State	CDFW	CNPS		
Sagittaria sanfordii	Sanford's arrowhead	-	-	-	1B.2	Occurs from the coast to Central California within wetlands, canals, and slow-moving freshwater waterways. Aquatic perennial; below 2,200 feet elevation; blooms May–October.	**Absent.** No suitable habitat is present in proposed project area, and species was not observed during floristic surveys.

Notes:

Status Codes:

Federal Designations: (E) Federally listed as endangered, (T) Federally listed as threatened, (C) Candidate for listing, (D) Delisted

State Designations: (E) State listed as endangered, (T) State listed as threatened, (R) State listed as rare

CNPS California Rare Plant Rank:

(1A) Presumed extinct in California; (1B) Rare, threatened, or endangered in California and elsewhere; (2) Rare, threatened, or endangered in California, but more common elsewhere; (3) More information is needed; (4) Limited distribution, watch list

Threat Ranks:

0.1 Seriously threatened in California (more than 80% of occurrences threatened, or high degree and immediacy of threat)

0.2 Fairly threatened in California (20% to 80% occurrences threatened, or moderate degree and immediacy of threat)

0.3 Not very threatened in California (less than 20% of occurrences threatened, or low degree and immediacy of threat or no current threats known)

Table 7-3. Special-Status Animal Species Known to Occur in the Vicinity of the Proposed Project

Scientific Name	Common Name	Status				Habitat Requirements	Potential for Occurrence
		Federal	State	CDFW	CNPS		
Invertebrates							
Branchinecta conservatio	Conservancy fairy shrimp	E	-	-	-	Inhabit rather large, moderately turbid cool-water vernal pools that fill with water in the rainy season, then slowly dry up from their outer, more shallow edges, to their deeper areas in the center.	**Unlikely to Occur**. Suitable vernal pool habitat is present in the proposed project area; however, the species' known range does not include Placer County or the Southeastern Sacramento Valley Vernal Pool Region. The species is known from a few isolated populations in the Vina Plains area of Tehama and Butte counties, the Jepson Prairie area in Solano County, the Yolo Basin Wildlife Area in Yolo County, the Sacramento National Wildlife Refuge in Glenn County, and from Merced County and Ventura County (USFWS 2005). One CNDDB occurrence is located about 5 miles from the project, on the Mariner Conservation Bank property.
Branchinecta lynchi	Vernal pool fairy shrimp	T	-	-	-	Endemic to the grasslands of Central Valley Coast Mountains and South Coast mountains, in rain-filled pools.	**Likely to Occur**. Suitable vernal pool habitat is present in the proposed project area. There are numerous CNDDB records of this species in vernal pool habitat surrounding the proposed project area, including one occurrence within the proposed project area.
Desmocerus californicus dimorphus	Valley elderberry longhorn beetle	T	-	-	-	Occurs only in the Central Valley of California, in association with blue elderberry (Sambucus nigra).	**Potential to Occur**. Suitable habitat is present in the proposed project area. Several mature elderberry shrubs were observed in the southwestern part of the

Table 7-3. Special-Status Animal Species Known to Occur in the Vicinity of the Proposed Project

Scientific Name	Common Name	Status				Habitat Requirements	Potential for Occurrence
		Federal	State	CDFW	CNPS		
							center property, in an area that is thought to have functioned as a landfill mitigation bank. No evidence of valley elderberry longhorn beetle use observed (i.e., no exit holes).
Lepidurus packardi	Vernal pool tadpole shrimp	E	-	-	-	Marshes and swamps (freshwater). Inhabits vernal pools and swales in the Sacramento Valley containing clear to highly turbid water.	**Potential to Occur**. Suitable vernal pool habitat is present in the proposed project area. Three CNDDB occurrences are within 5 miles of the project, with observations as recent as 2013.
Amphibians/Reptiles							
Rana draytonii	California red-legged frog	T	-	SSC	-	Typically, a pond frog, found in or near water, but can wander overland at times, sometimes found in damp places far from water, including cool and moist bushes and thickets. Found active all year except in wetlands that dry out in summer, where frogs will estivate in moist refuges until the late fall rains.	**Unlikely to Occur**. While suitable habitat is present in the proposed project area, the species' known range is outside the proposed project area, and there are no CNDDB occurrences within 5 miles of the project.
Spea hammondii	Western spadefoot	-	-	SSC	-	Occurs primarily in grassland habitats but can be found in valley-foothill hardwood woodlands; vernal pools are essential for breeding and egg-laying.	**Likely to Occur**. Suitable habitat is present in the proposed project area. There are several CNDDB occurrences within 5 miles of the project, including a 2016 record at the northern extent of the western property, just south of East Catlett Road.

Table 7-3. Special-Status Animal Species Known to Occur in the Vicinity of the Proposed Project

Scientific Name	Common Name	Status				Habitat Requirements	Potential for Occurrence
		Federal	State	CDFW	CNPS		
Thamnophis gigas	Giant garter snake	T	T	-	-	California Central Valley, wetlands, rice fields, canals, and marshes.	**Unlikely to Occur**. There is no suitable aquatic habitat preferred by the species present in the proposed project area and no CNDDB records within 5 miles of the proposed project area.
Fish							
Hypomesus transpacificus	Delta smelt	T	E	-	-	Endemic to the upper Sacramento-San Joaquin Estuary of California, it mainly inhabits the freshwater-saltwater mixing zone of the estuary, except during its spawning season, when it migrates upstream to freshwater following winter "first flush" flow events.	**Absent**. No suitable habitat present in the proposed project area; therefore, this species is presumed absent.
Oncorhynchus mykiss irideus	Steelhead trout - Central Valley distinct population segment	T	-	SSC	-	Adult summer steelhead enter their natal rivers in the spring or summer and hold there until winter or spring when they spawn. Most adult steelhead enter the river in the fall or winter and spawn in early winter or spring.	**Absent**. No suitable habitat present in the proposed project area; therefore, this species is presumed absent.
Birds							
Agelaius tricolor	Tricolored blackbird	-	-	SSC	-	Highly colonial species, most numerous in Central Valley and vicinity. Largely endemic to California. Requires open water, protected nesting substrate, and foraging area with insect prey within a few kilometers of colony.	**Present**. Suitable foraging habitat is present in the proposed project area. Species was observed (flyovers) throughout the proposed project area during reconnaissance surveys.

Table 7-3. Special-Status Animal Species Known to Occur in the Vicinity of the Proposed Project

Scientific Name	Common Name	Status				Habitat Requirements	Potential for Occurrence
		Federal	State	CDFW	CNPS		
Ammodramus savannarum	Grasshopper sparrow	-	-	SSC	-	Open, dry annual or perennial grasslands, deserts, and scrublands characterized by low-growing vegetation. Open fields and prairie across southern Canada, the United States, Mexico, and Central America. They forage on the ground in vegetation, mainly eating insects, especially grasshoppers, and seeds.	**Potential to Occur**. Suitable grassland habitat is present.
Athene cunicularia	Burrowing owl	-	-	SSC	-	Open, dry annual, or perennial grasslands; deserts; and scrublands characterized by low-growing vegetation.	**Potential to Occur**. Suitable habitat is present in the proposed project area.
Buteo swainsoni	Swainson's hawk	-	T	-	-	Breeds in grasslands with scattered trees, juniper-sage flats, riparian areas, savannahs, and agricultural ranchlands.	**Present**. Suitable nesting habitat is found in the proposed project area. Nesting pair found in the northeast corner of the landfill, directly adjacent to the eastern property.
Circus cyaneus	Northern harrier	-	-	SSC	-	Prairie grasslands to fields and marshes. Their nests are concealed on the ground in grasses or wetland vegetation.	**Present**. Suitable nesting habitat is present in the proposed project area. Potential nest site observed on the eastern side of the landfill outside of, but directly adjacent to, the eastern property.

Table 7-3. Special-Status Animal Species Known to Occur in the Vicinity of the Proposed Project

Scientific Name	Common Name	Status				Habitat Requirements	Potential for Occurrence
		Federal	State	CDFW	CNPS		
Elanus leucurus	White-tailed kite	-	-	CFP	-	Found in savannah, open woodlands, marshes, desert grassland, partially cleared lands, and cultivated fields.	**Potential to Occur**. Suitable habitat is present in the proposed project area.

Notes:

Status Codes:

Federal Designations: (E) Federally listed as endangered, (T) Federally listed as threatened, (C) Candidate for listing, (D) Delisted

State Designations: (E) State listed as endangered, (T) State listed as threatened, (R) State listed as rare

CDFW Designations: (SSC) Species of Special Concern, (CFP) Fully Protected Species, (WL) Watch List

7.2 Regulatory Setting

The regulatory setting of the proposed project area has been described previously in the SAP and PCCP EIRs (Placer County 2019: 2020a). The description of the regulatory setting in the proposed project area provided in this section has been adapted from these references.

7.2.1 Federal

Clean Water Act, Sections 401 and 404

Section 404 of the federal Clean Water Act (CWA) regulates the discharge of dredged and fill material to jurisdictional waters of the United States. The definition of waters of the United States under the CWA is codified in the Navigable Waters Protection Rule (85 FR 22250), which went into effect on June 22, 2020. Activities involving discharge of fill into waters of the United States are regulated by USACE through issuance of CWA Section 404 permits. No Section 404 permit is effective in the absence of state water quality certification pursuant to Section 401 of the CWA, issued by the Central Valley Regional Water Quality Control Board (RWQCB). Under CWA Section 401, applicants for a federal license or permit to conduct activities that may result in the discharge of a pollutant into waters of the United States must also obtain certification from the state in which the discharge would originate.

Western Placer County Aquatic Resources Program

The Western Placer County Aquatic Resources Program (CARP) was established as a component of PCCP (along with the Habitat Conservation Plan/Natural Community Conservation Plan [HCP/NCCP or the Plan]) (Placer County 2020a). The CARP's role is to provide a structure for protecting aquatic resources in western Placer County while streamlining the environmental permitting process for impacts. The CARP protects aquatic resources by establishing avoidance, minimization, and mitigation requirements for projects with Covered Activities (such as the proposed project) that have the potential to affect such resources. The CARP provides a means to fulfill the requirements of federal, state, and local laws that protect aquatic resources, using the HCP/NCCP's comprehensive, long-term, regional conservation strategy. Under the CARP, projects must implement avoidance, minimization, and compensatory mitigation measures designed to protect aquatic resources. Site-specific avoidance and minimization measures are derived from the HCP/NCCP (Placer County 2020a). However, the CARP's requirements about these measures may be more specifically defined than those called for in the HCP/NCCP.

Along with the CARP and the HCP/NCCP, the PCCP also includes the Western Placer County In-Lieu Fee Program (ILF Program), under which compensatory mitigation requirements under Section 404 of the CWA can be fulfilled by payment of a fee. Credits can be allocated from the ILF Program based on the mitigation requirements established by the CARP and can be covered by the PCCP Program Development Fees paid for by the project applicant. The ILF Program uses fee revenues to fund the preservation, enhancement, restoration, creation, and management of aquatic resources. The ILF Program also can be used to compensate for impacts regulated under Sections 404 and 401 of the CWA and *Fish and Game Code* (FGC) Section 1600 et seq.

Federal Endangered Species Act

USFWS and National Marine Fisheries Service administer the FESA of 1973 and subsequent amendments. The FESA requires each agency to maintain lists of imperiled native species and affords substantial protections to these "listed" species. National Marine Fisheries Service jurisdiction under FESA is limited to the protection of marine mammals, marine fishes, and anadromous fishes; all other species are subject to USFWS jurisdiction.

Section 10

Section 10(a)(1)(B) of FESA involves the issuance of an incidental take permit for any nonfederal action that is reasonably certain to take an endangered or threatened species. FESA requires that applications for incidental take permits are accompanied by an HCP. The HCP describes how the take of individuals will be offset to the maximum extent practicable by providing for the conservation of the affected species through specific mitigation measures.

A joint HCP/NCCP (the State counterpart to the federal HCP) has been developed as a component of the PCCP to provide a framework that would satisfy the requirements of Section 10 of FESA. The HCP/NCCP includes measures to avoid and minimize take of covered species and provides compensatory mitigation for incidental take of covered species and loss of natural communities resulting from Covered Activities. The PCCP's goal is to provide an effective framework to protect, enhance, and restore the natural resources in specific areas of western Placer County, while streamlining the permitting of a range of land development, infrastructure development, maintenance, and habitat restoration actions known as Covered Activities. The proposed project is identified as a Covered Activity under the PCCP HCP/NCCP (Placer County 2020a).

Migratory Bird Treaty Act

The MBTA, enacted in 1918, domestically implements a series of international treaties that provide protection for migratory birds. It authorizes the United States Secretary of the Interior to regulate the taking of migratory birds and provides that it is unlawful, except as permitted by regulations, to pursue, take, or kill any migratory bird, or any part, nest, or egg of any such bird (16 USC 703). This prohibition includes both direct and indirect acts, although harassment and habitat modification are not included unless they result in direct loss of birds, nests, or eggs. The current list of species protected by the MBTA includes several hundred species, which is essentially all the native birds in the United States. Numerous migratory birds are known and have potential to nest in the proposed project area.

A January 2020 proposed rule by USFWS clarifies that the scope of the MBTA only extends to conduct that intentionally injures birds. Conduct that results in the unintentional (incidental) injury or death of migratory birds is not prohibited under the act. This proposed rule would codify the 2017 Department of the Interior Solicitor's Office Opinion M–37050, which initially analyzed and limited the scope of the MBTA.

Executive Order 11990: Protection of Wetlands

Executive Order 11990, signed May 24, 1977, directs all federal agencies to refrain from assisting in, or giving financial support to, projects that encroach on publicly or privately owned wetlands. It further requires that federal agencies support a policy to minimize the destruction, loss, or degradation of wetlands. Such a project (that encroaches on wetlands) may not be undertaken unless the agency has determined that (1) there are no practicable alternatives to such construction, (2) the project includes all practicable measures to minimize harm to wetlands that would be affected by the project, and (3) the impact will be minor.

Recovery Plan for Vernal Pool Ecosystems of California and Southern Oregon

The Recovery Plan for Vernal Pool Ecosystems of California and Southern Oregon (USFWS 2005) was released by USFWS on December 15, 2005. This plan focuses on 33 species of plants and animals that occur exclusively or primarily within vernal pool ecosystems, including the federally listed vernal pool fairy shrimp and vernal pool tadpole shrimp.

The recovery plan outlines recovery priorities and provides goals, objectives, strategies, and criteria for recovery. One of the overall objectives of the recovery plan is to promote natural ecosystem processes and

functions by protecting and conserving intact vernal pools and vernal pool complexes. Habitat protection under the recovery plan includes the protection of the topographic, geographic, and edaphic features that support hydrologically interconnected systems of vernal pools, swales, and other seasonal wetlands within an upland matrix that together form hydrologically and ecologically functional vernal pool complexes.

The vernal pool recovery plan goal is to preserve 85 percent of the existing vernal pool fairy shrimp habitat within the western Placer County core area. Habitat to be protected includes occupied and unoccupied suitable habitat that serves as corridors for dispersal, opportunities for metapopulation dynamics, reintroduction and introduction sites, and protection of undiscovered populations.

Although not regulatory in nature, the recovery plan should be taken into consideration when analyzing potential impacts on vernal pools and associated biota so that projects do not prevent or impair the plan's future long-term implementation success. It is also used by the USFWS to determine recommendations and requirements during endangered species consultation for vernal pool-dependent species.

7.2.2 State

California Endangered Species Act

The CESA (FGC Sections 2050–2116) states that all native species or subspecies of a fish, amphibian, reptile, mammal, or plant and their habitats that are threatened with extinction and those experiencing a significant decline that, if not halted, would lead to a threatened or endangered designation will be protected or preserved.

Under Section 2081 of the FGC, a permit from CDFW is required for projects that could result in the take of a species that is state listed as threatened or endangered. *Take* is defined more narrowly under CESA than FESA. Under CESA, take of a species means hunt, pursue, catch, capture, or kill, or attempt to hunt, pursue, catch, capture, or kill (FGC, Section 86). The state definition of take does not include harm or harass, whereas the definition of take under FESA does. As a result, the threshold for take under CESA is higher than that under FESA. For example, habitat modification is not necessarily considered take under CESA.

Natural Communities Conservation Planning Act

FGC Sections 2800–2835 detail the state's policies on the conservation, protection, restoration, and enhancement of the state's natural resources and ecosystems. The intent of the legislation is to provide for conservation planning as an officially recognized policy that can be used as a tool to eliminate conflicts between the protection of natural resources and the need for growth and development. Additionally, the legislation promotes conservation planning as a means of coordination and cooperation among private interests, agencies, and landowners, and as a mechanism for multispecies and multihabitat management and conservation. The development of NCCPs is an alternative to obtaining take authorization under Section 2081 of the FGC.

The joint HCP/NCCP has been developed as a component of the PCCP. The HCP/NCCP is intended to protect fish and wildlife and their habitats and fulfill the requirements of FESA and the California Natural Community and Conservation Planning Act (NCCP Act).

California Native Plant Protection Act

FGC Sections 1900–1913 codify the Native Plant Protection Act of 1977 (NPPA), which is intended to preserve, protect, and enhance endangered or rare native plants in the state. Under Section 1901, a species is endangered when its prospects for survival and reproduction are in immediate jeopardy from

one or more causes. A species is rare when, although not threatened with immediate extinction, it exists in such small numbers throughout its range that it may become endangered if its present environment worsens. The NPPA gave the California Fish and Game Commission the power to designate native plants as endangered or rare, and the act protected endangered and rare plants from take. According to CDFW, a CESA Section 2081 permit for incidental take of listed threatened and endangered plants from all activities is required, except for activities specifically authorized by the NPPA.

***California Fish and Game Code*, Section 1600 (Lake and Streambed Alteration)**

Sections 1600–1603 of the FGC state that it is unlawful for any person or agency to substantially divert or obstruct the natural flow, or substantially change the bed, channel, or bank of any river, stream, or lake in California that supports wildlife resources, or to use any material from the streambeds, without first notifying CDFW. A Lake and Streambed Alteration Agreement must be obtained if effects are expected to occur. A stream is a body of water that flows at least periodically or intermittently through a bed or channel having banks, and that supports wildlife, fish, or other aquatic life. This definition includes watercourses having a surface or subsurface flow that supports or has supported riparian vegetation. CDFW's jurisdiction within altered or artificial waterways is based on the value of those waterways to fish and wildlife.

***California Fish and Game Code*—Various Sections**

The FGC provides protection from take for a variety of species. Section 5050 prohibits take of fully protected amphibians and reptiles. Section 3515 prohibits take of fully protected fish species. Eggs and nests of all birds are protected under Section 3503, nesting birds (including raptors and passerines) are protected under Sections 3503.5 and 3513, birds of prey are protected under Section 3503.5, and fully protected birds are listed under Section 3511. Migratory nongame birds are protected under Section 3800. Fully protected mammals are listed under Section 4700. The FGC defines take as "hunt, pursue, catch, capture, or kill, or attempt to hunt, pursue, catch, capture, or kill." Except for take related to scientific research, all take of fully protected species is prohibited. CDFW cannot issue a take permit for fully protected species, except under narrow conditions for scientific research or the protection of livestock, or if an NCCP has been adopted.

Porter-Cologne Water Quality Control Act

Under the Porter-Cologne Water Quality Act (Porter-Cologne Act) definition, waters of the state are "any surface water or groundwater, including saline waters, within the boundaries of the state." Although all waters of the United States that are within the borders of California are also waters of the state, the reverse is not true. Therefore, California retains authority to regulate discharges of waste into any waters of the state, regardless of whether USACE has concurrent jurisdiction under CWA Section 404 and defines discharges to receiving waters more broadly than CWA does.

Waters of the state fall under the jurisdiction of the nine RWQCBs. The project site is wholly under the jurisdiction of the Central Valley RWQCB. Under this act, each RWQCB must prepare and periodically update water quality control basin plans. The basin plan that is in place for the project site is the Sacramento River Basin and San Joaquin River Basin Water Quality Control Plan. Each basin plan sets forth water quality standards for surface water and groundwater, as well as actions to control nonpoint and point sources of pollution. *California Water Code* Section 13260 requires any person discharging waste, or proposing to discharge waste, in any region that could affect the waters of the state to file a report of discharge (an application for waste discharge requirements) with the applicable RWQCB. *California Water Code* Section 13050 authorizes the State Water Resources Control Board and the affiliated RWQCB to regulate biological pollutants. Aquatic invasive plants discharged to receiving waters are an example of

this kind of pollutant. Construction activities associated with the plan concepts that may discharge wastes into the waters of the state must meet the discharge control requirements of the Porter-Cologne Act.

California Wetlands Conservation Policy

The goals of the California Wetlands Conservation Policy, adopted in 1993 (Executive Order W-59-93), are "to ensure no overall net loss, and achieve a long-term net gain in the quantity, quality, and permanence of wetlands acreage and values in California, in a manner that fosters creativity, stewardship, and respect for private property"; to reduce procedural complexity in the administration of state and federal wetlands conservation programs; and to make restoration, landowner incentive programs, and cooperative planning efforts the primary focus of wetlands conservation.

7.2.3 Local

The WPWMA is a Joint Powers Authority (JPA) composed of Placer County and the cities of Lincoln, Rocklin, and Roseville to own and operate a regional recycling facility and sanitary landfill. As a JPA, the WPWMA considers local regulations and consults with local agencies, but the County and city regulations are not applicable, because the County and cities do not have jurisdiction over the proposed project. Accordingly, the following discussion of local goals and policies associated with biological resources is provided for informational purposes only.

Placer County General Plan

The relevant goals and policies from the Placer County General Plan that pertain to biological resources are presented in this section (Placer County 2013). Although the WPWMA is an independent government agency that is not required to comply with the County's policies, the WPWMA intends to implement a proposed project that is generally consistent with these policies.

Wetland and Riparian Areas.

GOAL 6.B: To protect wetland communities and related riparian areas throughout Placer County as valuable resources.

- Policy 6.B.1: The County shall support the "no net loss" policy for wetland areas regulated by the U.S. Army Corps of Engineers, the U.S. Fish and Wildlife Service, and the California Department of Fish and Wildlife. Coordination with these agencies at all levels of project review shall continue to ensure that appropriate mitigation measures and the concerns of these agencies are adequately addressed.
- Policy 6.B.2: The County shall require new development to mitigate wetland loss in both federal jurisdictional and non-jurisdictional wetlands to achieve "no net loss" through any combination of the following, in descending order of desirability: (1) avoidance; (2) where avoidance is not possible, minimization of impacts on the resource; or (3) compensation, including use of a mitigation and conservation banking program that provides the opportunity to mitigate impacts to special status, threatened, and endangered species and/or the habitat which supports these species in wetland and riparian areas. Non-jurisdictional wetlands may include riparian areas that are not federal "waters of the United States" as defined by the Clean Water Act.
- Policy 6.B.3: The County shall discourage direct runoff of pollutants and siltation into wetland areas from outfalls serving nearby urban development. Development shall be designed in such a manner that pollutants and siltation will not significantly adversely affect the value or function of wetlands.

- Policy 6.B.4: The County shall strive to identify and conserve remaining upland habitat areas adjacent to wetlands and riparian areas that are critical to the survival and nesting of wetland and riparian species.
- Policy 6.B.5: The County shall require development that may affect a wetland to employ avoidance, minimization, and/or compensatory mitigation techniques. In evaluating the level of compensation to be required with respect to any given project, (a) onsite mitigation shall be preferred to offsite, and in-kind mitigation shall be preferred to out-of-kind; (b) functional replacement ratios may vary to the extent necessary to incorporate a margin of safety reflecting the expected degree of success associated with the mitigation plan; and (c) acreage replacement ratios may vary depending on the relative functions and values of those wetlands being lost and those being supplied, including compensation for temporal losses. The County shall continue to implement and refine criteria for determining when an alteration to a wetland is considered a less-than-significant impact under [the California Environmental Quality Act].

Fish and Wildlife Habitat.

GOAL 6.C: To protect, restore, and enhance habitats that support fish and wildlife species so as to maintain populations at viable levels.

- Policy 6.C.1: The County shall identify and protect significant ecological resource areas and other unique wildlife habitats critical to protecting and sustaining wildlife populations. Significant ecological resource areas include the following:
  a) Wetland areas, including vernal pools
  b) Stream zones
  c) Any habitat for special status, threatened, or endangered animals or plants
  d) Critical deer winter ranges (winter and summer), migratory routes, and fawning habitat
  e) Large areas of nonfragmented natural habitat, including blue oak woodlands, valley foothill and montane riparian, valley oak woodlands, annual grasslands, and vernal pool or grassland complexes
  f) Identifiable wildlife movement zones, including nonfragmented stream environment zones, avian and mammalian migratory routes, and known concentration areas of waterfowl within the Pacific Flyway, among others
  g) Important spawning and rearing areas for anadromous fish
- Policy 6.C.2: The County shall require development in areas known to have particular value for wildlife to be carefully planned and, where possible, located so that the reasonable value of the habitat for wildlife is maintained.
- Policy 6.C.3: The County shall encourage the control of residual pesticides to prevent potential damage to water quality, vegetation, fish, and wildlife.
- Policy 6.C.5: The County shall require mitigation for development projects where isolated segments of stream habitat are unavoidably altered. Such impacts should be mitigated onsite with in-kind habitat replacement or elsewhere in the stream system through stream or riparian habitat restoration work where it is clear that offsite replacement provides greater functions and values than onsite replacement.

- Policy 6.C.6. The County shall support preservation of the habitats of threatened, endangered, and/or other special status species. Where County acquisition and maintenance is not practicable or feasible, federal and state agencies, as well as other resource conservation organizations, shall be encouraged to acquire and manage endangered species' habitats.
- Policy 6.C.7: The County shall support the maintenance of suitable habitats for all indigenous species of wildlife, without preference to game or non-game species, through maintenance of habitat diversity.
- Policy 6.C.9: The County shall require new private or public developments to preserve and enhance existing riparian habitat unless public safety concerns require removal of habitat for flood control or other essential public purposes. In cases where new private or public development results in modification or destruction of riparian habitat the developers shall be responsible for acquiring, restoring, and enhancing at least an equivalent amount of like habitat within or near the project area.
- Policy 6.C.10: The County will use the California Wildlife Habitat Relationships system as a standard descriptive tool and guide for environmental assessment in the absence of a more detailed site-specific system.
- Policy 6.C.11: Prior to approval of discretionary development permits involving parcels within a significant ecological resource area, the County shall require, as part of the environmental review process, a biotic resources evaluation of the sites by a wildlife biologist. The evaluation shall be based upon field reconnaissance performed at the appropriate time of year to determine the presence or absence of special status, threatened, or endangered species of plants or animals. Such evaluation will consider the potential for significant impact on these resources and will identify feasible measures to mitigate such impacts or indicate why mitigation is not feasible. In approving any such discretionary development permit, the decision-making body shall determine the feasibility of the identified mitigation measures. Significant ecological resource areas shall, at a minimum, include the following:

  a) Wetland areas, including vernal pools

  b) Stream zones

  c) Any habitat for special status, threatened, or endangered animals or plants

  d) Critical deer winter ranges (winter and summer), migratory routes, and fawning habitat

  e) Large areas of non-fragmented natural habitat, including blue oak woodlands, valley foothill and montane riparian, valley oak woodlands, annual grasslands, and vernal pool/grassland complexes habitat

  f) Identifiable wildlife movement zones, including but not limited to, non-fragmented stream environment zones, avian and mammalian migratory routes, and known concentration areas of waterfowl within the Pacific Flyway. Important spawning and rearing areas for anadromous fish.

Vegetation.

GOAL 6.D: To preserve and protect the valuable vegetation resources of Placer County.

- Policy 6.D.2: The County shall require developers to use native and compatible nonnative species, especially drought-resistant species, to the extent possible in

fulfilling landscaping requirements imposed as conditions of discretionary permits or for project mitigation.

- Policy 6.D.3: The County shall support the preservation of outstanding areas of natural vegetation, including, but not limited to, oak woodlands, riparian areas, and vernal pools.
- Policy 6.D.4: The County shall ensure that landmark trees and major groves of native trees are preserved and protected. In order to maintain these areas in perpetuity, protected areas shall also include younger vegetation with suitable space for growth and reproduction.
- Policy 6.D.5: The County shall establish procedures for identifying and preserving special-status, threatened, and endangered plant species that may be adversely affected by public or private development projects.
- Policy 6.D.6: The County shall ensure the conservation of sufficiently large, continuous expanses of native vegetation to provide suitable habitat for maintaining abundant and diverse wildlife.
- Policy 6.D.7: The County shall support the management of wetland and riparian plant communities for passive recreation, groundwater recharge, nutrient catchment, and wildlife habitats. Such communities shall be restored or expanded, where possible.
- Policy 6.D.8: The County shall require that new development preserve natural woodlands to the maximum extent possible.
- Policy 6.D.10: The County shall encourage the planting of native trees, shrubs, and grasslands in order to preserve the visual integrity of the landscape, provide habitat conditions suitable for native wildlife, and ensure that a maximum number and variety of well-adapted plants are maintained.
- Policy 6.D.11: The County shall support the continued use of prescribed burning, mastication, chipping, and other methods to mimic the effects of natural fires to reduce fuel loads and associated fire hazard to human residents and to enhance the health of biotic communities.
- Policy 6.D.12: The County shall support the retention of vegetated corridors, consistent with Fire Safe Practices, along circulation routes in order to preserve their rural character.
- Policy 6.D.13: The County shall support the preservation of native trees and the use of native, drought-tolerant plant materials in all revegetation/landscaping projects.
- Policy 6.D.14: The County shall require that new development avoid ecologically fragile areas (e.g., areas of special status, threatened, or endangered species of plants, and riparian areas). Where feasible, these areas should be protected through public or private acquisition of fee title or conservation easements to ensure protection.

Sunset Area Plan.

The SAP includes goals and policies for protection of natural resources that are known to occur or may occur in the plan area. These policies are intended to complement the provisions of the PCCP and to supplement the goals and policies of the Placer County General Plan. The County would require, as conditions of approval, that applicants for future projects under the SAP implement these policies. As stated previously in relation to Placer County General Plan policies, the WPWMA is an independent government agency that is not required to comply with the SAP policies established by the County. However, the WPWMA intends to implement a proposed project that is generally consistent with these policies.

The goal of the PCCP is to provide an effective framework to protect, enhance, and restore the natural resources in specific areas of western Placer County while streamlining the permitting of a range of land development, infrastructure development, and maintenance and habitat restoration actions known as "Covered Activities." Within this framework, the PCCP would achieve a range of conservation goals, comply with state and federal environmental regulations, accommodate anticipated urban and rural growth, and permit the construction and maintenance of infrastructure needed to serve the County's growing population. The PCCP includes two separate but complementary plans or programs that support two sets of state and federal permits:

- The HCP/NCCP. The Plan is a joint HCP and NCCP that would protect fish and wildlife and their habitats and fulfill the requirements of FESA, CESA, and the NCCP Act.
- The CARP. The CARP would protect streams, wetlands, and other water resources and fulfill the requirements of the federal CWA (Section 404 and 401) and analogous state laws and regulations.

Collectively, these permits represent most of the major wetland and FESA/CESA permits required for land development activity that may occur on public and private property in western Placer County; however, they would not, as currently proposed, cover any plant species nor some wildlife species of special concern. An EIR and study were prepared concurrently with the development of the HCP/NCCP and CARP.

Conservation Strategy.

The PCCP proposes to progressively establish a large system of interconnected blocks of conserved and restored land. Over the 50-year permit term for the PCCP, the program would acquire approximately 47,000 acres for conservation irrespective of the amount of loss that occurs as a result of Covered Activities. If development occurs as projected, 7,093 acres of natural communities would be restored. If less development occurs, then about 4,405 acres of natural communities would be restored. These protected and restored lands would augment the approximately 16,000 acres of land that is in conservation today. Cumulatively, approximately 38 percent of the present natural and semi-natural landscape in western Placer County would ultimately be subject to conservation management.

The Reserve System would provide a means for protecting, managing, enhancing, and restoring or creating the natural communities and habitats that support 14 species that are proposed for coverage under the PCCP, including the vernal pool fairy shrimp, vernal pool tadpole shrimp, Swainson's hawk, and other species known or with potential to occur in the proposed project area. The Reserve System will mainly be located in the western and northern valley and in the northern foothills, regionally separated from future urban and suburban growth. A large portion of land near the proposed project (approximately 1,300 acres) adjacent to existing conservation reserves is being considered in the PCCP as a possible reserve acquisition area to meet grassland and vernal pool complex conservation objectives.

The PCCP seeks to integrate the federal CWA's regulations for wetlands with a conservation strategy for sensitive species regulated by the FESA/CESA. As a result, the program would provide for the protection, enhancement, restoration, and creation of the aquatic/wetland complex natural community as a fully integrated strategy. In addition to the delineated boundary of a wetland, the conservation strategy provides for the protection of surrounding upland, which is ecologically important for many wetland habitats, especially vernal pools. Preservation, restoration and creation of wetlands would specifically provide in-kind compensatory mitigation to achieve conservation of the Covered Species and no overall net loss of wetland habitat through the term of the permit.

One of the key objectives of the PCCP is to shift programmatic regulatory responsibility from state and federal agencies to the local jurisdictions (Placer County and the City of Lincoln). The PCCP is also intended to provide for a better mitigation and conservation framework for impacts associated with

development. Once complete, the PCCP would allow the participating agencies to integrate regulatory actions associated with endangered species and wetlands with their local entitlement processing. Lastly, the PCCP would help meet the County's conservation goals expressed by the General Plan and the Placer Legacy program, by developing a large, interconnected, managed, and monitored reserve area that would provide open space and agricultural conservation in perpetuity.

In March 2014, the County notified the WPWMA that the draft PCCP identified Solid Waste Operation and Maintenance as a Covered Activity and invited the WPWMA to become a Participating Special Entity in the PCCP. In May 2014, the WPWMA notified the County of its intent to participate in the PCCP as a Participating Special Entity.

7.3 Impact Analysis and Mitigation Measures

7.3.1 Thresholds of Significance

The thresholds of significance for assessing the impacts to biological resources come from the CEQA Environmental Checklist. For biological resources, the CEQA Checklist asks if the proposed project would

- Have a substantial adverse effect, either directly or through habitat modifications, on any species identified as a candidate, sensitive, or special status in local or regional plans, policies, or regulations, or by CDFW or USFWS?
- Have a substantial adverse effect on any riparian habitat or other sensitive natural community identified in local or regional plans, policies, or regulations, or by the CDFW or USFWS?
- Have a substantial adverse effect on federally protected wetlands (including marsh, vernal pool, and coastal) through direct removal, filling, hydrological interruption, or other means?
- Interfere substantially with the movement of any native resident or migratory fish or wildlife species or with established native resident or migratory wildlife corridor, or impede the use of native wildlife nursery sites?
- Conflict with any local policies or ordinances protecting biological resources, such as a tree preservation policy or ordinance?
- Conflict with the provisions of an adopted HCP, NCCP, or other approved local, regional, or state habitat conservation plan?

7.3.2 Methodology

Implementation of the proposed plan concepts could result in direct, indirect, and cumulative impacts on biological resources. *Direct impacts* are those effects of a project that occur at the same time and place as project implementation, such as removal of habitat through ground disturbance. *Indirect impacts* are those effects that occur either removed by time or by distance from project activities, but are reasonably foreseeable, such as downstream loss of aquatic species because of erosion impacts on water quality. Direct and indirect impacts can be permanent or temporary. *Cumulative impacts* are those incremental effects of a project that, even if less than significant themselves, could, in combination with the effects of other projects, significantly affect biological resources.

Potential impacts on biological resources were evaluated by comparing the quantity and quality of habitats present in the proposed project area under baseline conditions, to anticipated conditions after implementation of the project activities. The methods used to evaluate permanent, temporary, and indirect effects on biological resources are largely similar to those used in the SAP EIR and more broadly, the PCCP HCP/NCCP analyses. Direct and indirect impacts on biological resources were assessed based on the potential

for the resources to be disturbed or enhanced by implementation of the proposed project. The impact analysis identifies the potential impacts of the project, including cumulative impacts, and identifies SAP EIR mitigation measures and PCCP conservation measures, when available, to reduce the level of impact.

7.3.3 Impacts and Mitigation Measures

IMPACT 7-1	**Impacts on Special-Status Plant Species.** Implementation of the proposed project would result in direct removal and potentially indirect disturbance of dwarf downingia, a species with a California Rare Plant Rank of 2B.2, and potential habitat for other special-status plant species. Other special-status plant species may be present adjacent to the project site and could be indirectly affected by habitat removal or modification on the site. Impacts on special-status plant species would be **significant**.

Plan Concept 1

Two special-status plant species, dwarf downingia and legenere, have been documented within 5 miles of the proposed project. One of these, dwarf downingia, was determined to be present within the proposed project area. The remaining species listed in Table 7-2 (including legenere) are considered to be absent or unlikely to occur because the project site is outside of the species' documented range, suitable habitat is not present, or the species was not observed during seasonally appropriate floristic surveys. During the May 2017 floristic surveys, a population of dwarf downingia was observed in a large vernal pool located at the western edge of the eastern property. Several hundred plants were observed (Figure 7-4).

Implementation of Plan Concept 1 would result in direct permanent impacts on dwarf downingia and its habitat as a result of ground disturbance, vegetation clearing, and development of the eastern property. Populations of dwarf downingia or other special-status plant species that are adjacent to or hydrologically connected to the proposed project area could be indirectly affected. These indirect impacts could be caused by pollutants transported by storm water runoff and other means, airborne particulates, altered hydrology, habitat fragmentation, and the introduction of invasive species or noxious weeds. Indirect effects associated with habitat modification and fragmentation could degrade habitat quality to a degree that it is no longer suitable for special-status plants to regenerate, such that these populations eventually die out. Indirect effects on vernal pools (habitat for dwarf downingia) are generally considered to occur when ground-disturbing activities take place within 250 feet of a vernal pool—more specifically, when it can be demonstrated that the hydrology supporting a pool has been altered. Direct and indirect impacts on special-status plant species would be significant.

Plan Concept 2

Similar to Plan Concept 1, Plan Concept 2 would result in significant impacts on special-status plants.

Mitigation Measure 7-1: Impacts on Special-Status Plant Species.

The WPWMA will implement the proposed project as a Covered Activity under the PCCP and CARP to compensate for any loss of special-status plants.

VICINITY MAP

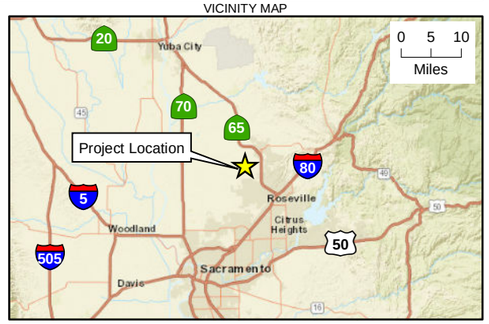

LEGEND

- Project Boundary (928.5 acres)
- Elderberry Shrub (Host Plant for Valley Elderberry Longhorn Beetle)
- Sensitive Wildlife
- Sensitive Plant

N

0 1,000 2,000
Feet

Figure 7-4. Special-Status Plants and Animals
Draft Environmental Impact Report
Renewable Placer: Waste Action Plan
Placer County, California

Jacobs

\\dc1vs01\GISProj\WI\WPWMA\Maps\Report\WPWMA_BRAR_2020\Fig7-4_SpecialStatus_Species_Observed.mxd 7/21/2021

Level of Significance after Mitigation.

The protection and restoration guided by the PCCP's goals, objectives, conservation measures, and conditions would compensate for the loss of special-status plant species, and preserved habitat would be managed in perpetuity, thereby reducing these effects to a **less-than-significant** level.

IMPACT 7-2	**Impacts on Vernal Pool Branchiopods and Western Spadefoot.** Implementation of the proposed project would result in loss and degradation of habitat for special-status wildlife species that rely on vernal pool-type wetlands for at least a portion of their lifecycle. These species include federally listed vernal pool fairy shrimp and vernal pool tadpole shrimp, as well as western spadefoot, a California species of special concern. Impacts on special-status vernal pool branchiopods and western spadefoot would be **significant**.

Plan Concept 1

Vernal pool complexes containing vernal pools, vernal pool-type wetlands, and the vernal pool immediate watershed provide habitat for vernal pool fairy shrimp, vernal pool tadpole shrimp, and western spadefoot. Western spadefoot rely on seasonal wetland habitats for breeding and spend the remainder of their lifecycle estivating in surrounding upland habitats. Vernal pool branchiopods carry out their entire lifecycle in vernal pool-type wetlands. Seasonally ponded depressions throughout the proposed project area provide suitable habitat for vernal pool branchiopods and western spadefoot, though no focused or protocol-level surveys for these species have been performed. Numerous occurrences of vernal pool branchiopods and several occurrences of western spadefoot are documented within 5 miles of the proposed project area. The loss of vernal pool complex habitat could result in potential take of vernal pool fairy shrimp, vernal pool tadpole shrimp, or western spadefoot, and loss of habitat for these species.

The proposed project area is within the western Placer County core area identified in the vernal pool recovery plan (USFWS 2005) as an area that is important to the preservation and recovery of vernal pool fairy shrimp and vernal pool tadpole shrimp, and to maintaining western spadefoot so that is does not become federally listed. The vernal pool recovery plan has a goal of preserving 85 percent of the existing vernal pool fairy shrimp habitat within the western Placer County core area, including both occupied and unoccupied suitable habitat, to recover the species. However, a large proportion of the western Placer County core area habitat has been, or is planned for, development, and some has been converted to agricultural uses, making it difficult to achieve the 85 percent preservation goal with anticipated development.

The proposed project would result in the conversion of approximately 19.2 acres of vernal pool-type wetlands (4.9 acres of vernal pool wetlands, 3.6 acres of non-vernal pool seasonal wetlands, and 10.7 acres of swales) to developed land use within the proposed project area (Figure 7-2). This constitutes approximately 27.9 percent of the 70 acres of vernal pool-type wetlands that would be converted in the net SAP area (Placer County 2019). Project impacts would be considered significant if vernal pool habitat within the proposed project area was determined to be, or assumed to be, occupied by special-status vernal pool branchiopods or western spadefoot. Impacts on occupied habitat may occur during grading or excavation for construction of Plan Concept 1.

In addition to the direct loss of vernal pool-type wetlands within the proposed project area, implementing Plan Concept 1 would have indirect effects on vernal pool-type wetlands outside of the proposed project area, as a result of direct impacts to the immediate watershed of those vernal pool-type wetlands. USFWS generally considers that vernal pool-type wetlands within 250 feet of lands that would be developed may

be subject to indirect effects unless site-specific analysis of terrain and hydrology demonstrate the immediate watershed is smaller than 250 feet around the wetland (USFWS 2005). Thus, vernal pool complex habitat on parcels that are outside, but adjacent to, the proposed project area could be indirectly affected by project implementation. Implementation of Plan Concept 1 may have indirect impacts on approximately 7.4 acres of vernal pool-type wetlands mapped outside of the proposed project area (within the 250-foot project area buffer) as a result of direct effects to the offsite wetlands' immediate watershed, where the watershed extends into the proposed project area (Figure 7-3).

Indirect effects, including reduction in water quality and altered hydrology caused by storm water runoff, erosion, and siltation; litter and dumping; and introduction of invasive plant species could result in habitat degradation leading to lower reproductive success of vernal pool branchiopods and western spadefoot outside the proposed project area, and a decline in numbers or eventual elimination of these species from the affected habitat. Additional indirect impacts on western spadefoot could include mortality related to an increase in vehicular traffic; noise and vibration disturbance causing toads to break dormancy; and exposure to herbicides, pesticides, and other toxins. The direct and indirect impacts on vernal pool fairy shrimp, vernal pool tadpole shrimp, and western spadefoot would be significant.

The recovery plan acknowledges that alternative mechanisms such as HCPs may be deemed equivalent to implementation of the recovery plan if they contain necessary elements specified for meeting equivalency (USFWS 2005). If adopted, the PCCP HCP/NCCP has been drafted to balance project-related effects throughout the future growth area of western Placer County with the necessary recovery elements in cooperation with USFWS and other agencies.

Plan Concept 2

Plan Concept 2 would result in the same level of impacts on vernal pool branchiopods and western spadefoot as Plan Concept 1 because the same areas would be disturbed, although the timing of the disturbance may differ.

Mitigation Measure 7-2: Impacts on Vernal Pool Branchiopods and Western Spadefoot.

The WPWMA will implement the proposed project as a Covered Activity under the PCCP and CARP to compensate for loss of vernal pool fairy shrimp and vernal pool tadpole shrimp habitat. Although western spadefoot is not covered under the PCCP, implementation of the PCCP would reduce impacts on western spadefoot because the species requires the protection of vernal pool complex habitat for survival, and this habitat would be protected for vernal pool fairy shrimp and vernal pool tadpole shrimp. The protection of vernal pool complex habitat, and vernal pool branchiopods and western spadefoot by proxy, would be supported by the following conditions from the PCCP (Placer County 2020c) (Appendix D):

- General Condition 1, Watershed Hydrology and Water Quality
- General Condition 3, Land Conversion
- General Condition 4, Temporary Effects
- General Condition 5, Conduct Worker Training
- Regional Public Projects Condition 3, Operations and Maintenance best management practices (BMPs)
- Species Condition 10, Vernal Pool Fairy Shrimp and Vernal Pool Tadpole Shrimp

Covered Activities will be assessed fees based on the parameters described in Chapter 9, Costs and Funding, and as summarized in Tables 9-6 and 9-7 of the PCCP HCP/NCCP (Placer County 2020a). Special habitat fees (Table 9-7 of the PCCP HCP/NCCP) are variable depending on the special habitat type and would be paid in addition to land conversion fees. In the Central Valley, the fees will be applied when projects affect natural, semi-natural, and other agricultural communities.

Level of Significance after Mitigation.

The proposed project would be implemented as a Covered Activity under the PCCP and CARP, and the project's special-status vernal pool branchiopods and western spadefoot impacts would be fully mitigated. Implementation of the PCCP is expected to reduce biological resource impacts to a much greater degree than would occur with project-by-project mitigation by developing a large, managed, and monitored reserve area that will provide vernal pool and associated habitat restoration, and open space and agricultural conservation in perpetuity, rather than smaller, more fragmented and isolated reserves surrounded by urban development. Additionally, its avoidance, minimization, and mitigation requirements also would support the reduction of potential indirect significant effects. The PCCP is specifically designed to support species recovery in addition to mitigating for direct and indirect species impacts. For these reasons, the project's impacts on special-status vernal pool branchiopods and western spadefoot would be reduced to **less than significant** with implementation of the PCCP and CARP.

IMPACT 7-3	**Impacts on Valley Elderberry Longhorn Beetle.** Implementation of the proposed project could result in loss of elderberry shrubs, the host plant for the federally listed as threatened valley elderberry longhorn beetle and could result in take of this species. Impacts on valley elderberry longhorn beetle would be **significant**.

Plan Concept 1

Scattered elderberry shrubs occur in the southwestern corner of the center property. Implementation of Plan Concept 1 could result in the removal of elderberry shrubs that could potentially provide habitat for valley elderberry longhorn beetle and take of individual valley elderberry longhorn beetles could occur. Indirect impacts from ground-disturbing activities or use of herbicides near shrubs also could result in decline of elderberry shrubs. Direct removal of elderberry shrubs or disturbance that affects shrubs' health or survival would be considered a significant impact because of the effects on valley elderberry longhorn beetles.

Plan Concept 2

Similar to Plan Concept 1, Plan Concept 2 could result in significant impacts on valley elderberry longhorn beetle.

Mitigation Measure 7-3: Impacts on Valley Elderberry Longhorn Beetle.

Valley elderberry longhorn beetle is a Covered Species under the PCCP. Potential impacts on this species will be mitigated by implementing the PCCP conservation strategy. The PCCP conservation strategy includes survey and impact minimization and avoidance requirements for Covered Species, other conditions on Covered Activities to achieve conservation goals and objectives for Covered Species and natural communities, establishment of a habitat reserve system, and long-term conservation and management of habitats in the reserve system. The protection and restoration of valley elderberry longhorn beetle habitat within the proposed project area would be supported by the following conditions from the PCCP (Placer County 2020b) (Appendix D):

- General Condition 4, Temporary Effects
- General Condition 5, Conduct Worker Training
- Regional Public Projects Condition 3, Operations and Maintenance BMPs
- Species Condition 8, Valley Elderberry Longhorn Beetle

Level of Significance after Mitigation.

Implementation of the PCCP conservation strategy for valley elderberry longhorn beetle would reduce impacts on valley elderberry longhorn beetle to a **less-than-significant** level.

IMPACT 7-4	**Impacts on Special-Status Bird Species, Including Raptors.** Implementation of the proposed project would result in direct removal or disturbance of habitat with potential to support burrowing owl, Swainson's hawk, northern harrier, white-tailed kite, tricolored blackbird, and grasshopper sparrow. Impacts on special-status bird species, including raptors, would be **significant**.

Plan Concept 1

Construction activities, such as ground disturbance and vegetation removal, and the conversion of suitable habitat to developed uses could result in the disturbance or loss of special-status bird species and reduced breeding productivity of these species. Special-status bird species are protected under FESA, CESA, FGC, CEQA, MBTA, or other regulations. Potential effects of project implementation on these species are detailed in the following sections.

Burrowing Owl.

Burrowing owl, a CDFW species of special concern, has been documented north of East Catlett Road across the road and north of the western property (CDFW 2021) and north of Athens Avenue in the Antonio Mountain Ranch mitigation bank site (Placer County 2017). The proposed project area contains suitable breeding and foraging habitat in annual grassland, vernal pool complexes, pasture, and agricultural lands, and in earthen berms along irrigation ditches and between agricultural fields. Based on the proximity to known occurrences, there is potential for the species to occur in the proposed project area. Development of Plan Concept 1 could result in destruction of active burrows or direct mortality of burrowing owls, if they are present. This would be a significant impact.

Swainson's Hawk, Northern Harrier, and White-Tailed Kite.

Swainson's hawk is listed as threatened under CESA. Northern harrier is a CDFW species of special concern, and white-tailed kite is listed as fully protected under the FGC. In the proposed project area, large, isolated trees (for example, cottonwoods and oaks) provide potentially suitable nest sites for Swainson's hawk and white-tailed kite, and annual grassland and vernal pool complex, pasture, and agricultural lands provide suitable foraging habitat for these three species, as well as potential nesting habitat for northern harrier in densely vegetated areas. During the 2017 surveys, Swainson's hawk and northern harrier were observed within the proposed project area. A pair of nesting Swainson's hawks was observed in a mature cottonwood tree (*Populus fremontii*) along Athens Avenue within the existing WPWMA facilities, directly adjacent to the eastern property. A northern harrier was observed exhibiting nest-tending and feeding behavior on the vegetated area of the WRSL. White-tailed kite were not observed during the 2017 surveys but are known to occur within 5 miles of the proposed project area (Figures 7-1a, 7-1b, and 7-4).

Construction activities associated with Plan Concept 1, such as ground disturbance, vegetation removal, construction vehicle activities, and the presence of construction crews, could disturb nesting Swainson's hawks, northern harriers, and white-tailed kites if they are present, potentially resulting in nest abandonment, nest failure, or mortality of chicks or eggs. Plan Concept 1 includes the conversion of approximately 426.5 acres of grassland plus additional potential foraging habitats (such as agricultural) for solid waste operations and other industrial uses. Conversion of these areas would result in the

permanent loss of suitable foraging habitat for Swainson's hawk. The potential loss of Swainson's hawk, white-tailed kite, and northern harrier nests, or the permanent loss of foraging habitat, would be a significant impact.

Tricolored Blackbird, Grasshopper Sparrow, and Other Bird Species Protected by the MBTA.

Potential, marginal nesting habitat for the tricolored blackbird, which is state listed as threatened, is present in vegetation along ditches and near areas of open water. Tricolored blackbird foraging habitat includes areas that support large insect populations (for example, field crops, including alfalfa, sunflower, rice; irrigated pastures; and lightly grazed grasslands), such as the agricultural areas in the western property. Tricolored blackbird nesting colonies have been documented within 5 miles of the proposed project area, and the species was observed flying through the proposed project area during the 2017 habitat surveys.

Grasshopper sparrow, a CDFW species of special concern, was determined to have potential to occur in the proposed project area, based on the presence of suitable habitat and documented occurrences nearby. Other passerine bird species protected by the MBTA may nest throughout the proposed project area in a range of habitat types, including trees, dense shrubs, grassland vegetation, and bare ground.

Activities associated with the construction of Plan Concept 1, such as ground disturbance and vegetation removal, could disturb nesting tricolored blackbird, grasshopper sparrow, and other MBTA-protected species, if they are present, potentially resulting in nest abandonment, nest failure, or mortality of chicks or eggs. This would be a significant impact.

Plan Concept 2

Similar to Plan Concept 1, Plan Concept 2 could result in significant impacts on special-status bird species, including raptors.

Mitigation Measure 7-4: Impacts on Special-Status Bird Species, Including Raptors.

Burrowing owl, Swainson's hawk, and tricolored blackbird are classified as Covered Species under the PCCP. Potential impacts on these species will be mitigated through implementation of the PCCP conservation strategy. The PCCP conservation strategy includes survey and impact minimization and avoidance requirements for Covered Species, other conditions on Covered Activities to achieve conservation goals and objectives for Covered Species and natural communities, establishment of a habitat reserve system, and long-term conservation and management of habitats in the reserve system. The protection and restoration of burrowing owl, Swainson's hawk, and tricolored blackbird within the proposed project area would be supported by the following conditions from the PCCP (Placer County 2020b) (Appendix D):

- General Condition 1, Watershed Hydrology and Water Quality
- General Condition 4, Temporary Effects
- General Condition 5, Conduct Worker Training
- Regional Public Projects Condition 3, Operation and Maintenance BMPs
- Species Condition 3, Western Burrowing Owl
- Species Condition 4, Tricolored Blackbird
- Species Condition 1, Swainson's Hawk

Level of Significance after Mitigation.

Implementation of the PCCP conservation strategy would mitigate the loss of individuals and nests of special-status bird species, including raptors. With implementation of the PCCP, the proposed project would not substantially affect the distribution, breeding productivity, viability, or regional population of these species. Therefore, potential impacts would be reduced to a **less-than-significant** level.

IMPACT 7-5	**Impacts on Wetlands or Other Sensitive Natural Communities.** Implementation of the proposed project would result in the loss of jurisdictional waters of the United States, including wetlands subject to USACE jurisdiction under the federal CWA. The proposed project also would result in the loss of a sensitive natural community. Impacts on wetlands and sensitive natural communities would be **significant**.

Plan Concept 1

Implementation of Plan Concept 1 would result in the direct loss of jurisdictional waters of the United States, including wetlands that may be subject to USACE jurisdiction under the federal CWA. Based on an aquatic resource delineation of the proposed project area, Plan Concept 1 is estimated to result in permanent, direct impacts to approximately 19.2 acres of vernal pool-type wetlands (4.9 acres of vernal pool wetlands, 3.6 acres of non-vernal pool seasonal wetlands, and 10.7 acres of swales), 1.0 acres of irrigated wetlands, and 2.5 acres of ponds throughout the proposed project area (Figure 7-2).

Vernal pools and vernal pool complex habitat within the proposed project area are considered sensitive natural communities by CDFW because of the rarity of the community in the state, and globally. Vernal pools within the proposed project area are representative of northern hardpan vernal pool habitat, which is the most common vernal pool habitat type in the Southeastern Sacramento Valley Vernal Pool Region, where they occur in complexes of many small pools and swales among mima mounds on soils of the Pentz-Pardee-Red Bluff, Redding-Corning, and San Joaquin series (USFWS 2007). Northern vernal pool hardpan habitat is considered a vulnerable community type at the global and state level and has been mapped by the CNDDB within 0.5 mile of the proposed project area (CDFW 2021).

CDFW also ranks specific vegetation alliances according to their degree of imperilment. The vernal pool communities observed within the proposed project area (which include species such as two-horned calicoflower [*Downingia bicornuta*], Fremont's goldfield [*Lasthenia fremontii*], and smooth goldfields [*Lasthenia glaberrima*]) indicate that these pools and associated complexes would be considered an imperiled community type at the global and state level (CDFW 2020).

It is assumed for purposes of this analysis that all wetlands within the proposed project area would be lost with implementation of Plan Concept 1. In addition to these direct losses, implementation of Plan Concept 1 would have indirect effects on approximately 7.4 acres of wetlands within the 250-foot project area buffer, as a result of direct effects to the offsite wetlands' immediate watershed, where the immediate watershed extends into the proposed project area (Figure 7-3b). Potential indirect effects include reduction in water quality caused by storm water runoff, erosion, and siltation; increased litter; noise and light pollution; alteration of the hydrologic regime through modification of surface flows or perched groundwater flows; intrusion of humans; and introduction or spread of invasive species that could result in habitat degradation.

The loss and degradation of vernal pool-type wetlands and other wetland habitats that would occur with implementation of Plan Concept 1 would result in substantial adverse effects on wetlands that are

potentially federally protected waters of the United States. Plan Concept 1 also would result in the loss of a sensitive natural community. Therefore, this impact would be significant.

Plan Concept 2

Plan Concept 2 would result in the same level of impacts on wetlands and sensitive natural communities as Plan Concept 1. This impact would be considered significant.

Mitigation Measure 7-5: Impacts on Wetlands or Other Sensitive Natural Communities.

The anticipated permanent impacts to wetlands would be offset through a watershed-based approach as described in the CARP (Placer County, 2020c). Both the HCP/NCCP and CARP require compensatory mitigation for wetland impacts to be implemented at 1.5:1 through payment into an ILF Program or purchase of mitigation credits at an agency-approved mitigation bank, or through land dedications in lieu of fee payments. Most of this mitigation would be achieved through the enhancement (rehabilitation) of wetlands and waters, and creation (establishment) or restoration (re-establishment) of 2,715 acres of constituent habitats that would be considered protected wetlands and waters (Placer County 2020c). Overall, the proposed wetland mitigation in the CARP would maintain or improve the functions and services of wetlands, including special aquatic sites, within the larger PCCP area.

The PCCP includes several objectives and conservation measures to prevent net loss of functions and services within the larger PCCP area. These objectives and measures would allow preserved, enhanced, and established and re-established wetlands and waters to maintain or improve the physical, chemical, and biological processes of wetlands in these landscapes, including nutrient cycling, vegetation structure, plant and animal diversity, habitat for rare or listed species, and habitat linkages and corridors. The services that these wetlands provide would include such benefits as flood control, groundwater recharge, and maintenance of water quality in receiving waters. The protection and restoration of protected wetlands and waters within the proposed project area would be supported by the following conditions from the PCCP (Placer County 2020b) (Appendix D):

- General Condition 1, Watershed Hydrology and Water Quality
- General Condition 3, Land Conversion
- General Condition 4, Temporary Effects
- Regional Public Project Condition 3, Operation and Maintenance BMPs

The CARP provides additional specific avoidance and minimization measures, summarized in Table 4.2 of that document (Placer County 2020c).

The PCCP objectives, conservation measures, and conditions establish performance standards for measuring the effectiveness of proposed conservation actions. The acres of protection and restoration and the commitment to ratios established in the CARP satisfy the typical mitigation that would be applied to the proposed project impacts, as well as mitigating the effects of the other conservation measures. The proposed conditions further demonstrate the intent to avoid and minimize effects and to maintain or improve wetland and water functions and services over the life of the PCCP.

Consistent with SAP Program NR-4, PCCP, and CARP, the project will delineate all aquatic resources, implement all feasible avoidance and minimization measures described in the PCCP and CARP, calculate the extent of impacts, and provide compensatory mitigation according to the procedures described in the PCCP and CARP through payment of applicable mitigation fees to the ILF Program or purchase of mitigation credits at an agency-approved mitigation bank. The PCCP may allow for consideration of land dedication in lieu of PCCP fees, subject to approval by the future Placer Conservation Authority and

concurrence by the state and federal agencies. The fees collected through the ILF Program will be used to fund land acquisition; mitigation projects that protect, enhance, and restore aquatic resources; and long-term management and monitoring in the PCCP Reserve Acquisition Areas.

Level of Significance after Mitigation.

Implementation of the PCCP conservation strategy would reduce impacts on wetlands and other sensitive natural communities. With implementation of the PCCP, the natural community creation, enhancement, restoration, and protection activities in the PCCP and mitigation commitments under the CARP, which includes a commitment to mitigate at a 1.5:1 for wetlands, are more than sufficient to support the conclusion that the impacts on wetlands would be reduced to **less than significant**. The permitting requirements of the USACE through the CWA would also require natural community creation, enhancement, restoration, and protection activities sufficient to prevent net loss of wetland resources.

IMPACT 7-6	**Interference with Wildlife Movement Corridors.** Implementation of the proposed project would not significantly interfere with the movement of native resident wildlife species through the proposed project area. Impacts related to interference with wildlife movement corridors would be **less than significant**.

Plan Concept 1

Wildlife movement corridors are features that provide connections between two or more areas of habitat that would otherwise be isolated. Often drainages, creeks, or riparian areas are used by wildlife as movement corridors, as these features can provide cover and access across a landscape. Movement corridors can include dispersal corridors between populations that allow genetic exchange within a metapopulation; corridors used for daily movements between areas that provide different habitat functions (for example, between areas that provide thermal cover and hiding cover and areas used for foraging and obtaining water); and migratory routes used for seasonal migrations between summer and winter ranges. There are no established migratory routes and no riparian corridors through the proposed project area that are vital for the movement of any resident or migratory fish or wildlife species or population. Implementation of Plan Concept 1 would not substantially interfere with the seasonal migration of any species. Therefore, this impact would be less than significant.

Plan Concept 2

Similar to Plan Concept 1, Plan Concept 2 would not substantially interfere with the seasonal migration of any species. Therefore, this impact would be less than significant.

IMPACT 7-7	**Conflicts with Local Ordinances.** Implementation of the proposed project would result in development in areas containing trees protected under the County Tree Ordinance. Project implementation would result in the removal or degradation of these resources and could conflict with the County Tree Ordinance. Impacts on trees protected under the County Tree Ordinance would be **significant**.

Plan Concept 1

The proposed project site has limited areas with landscape or non-native trees, including within the center property and near the farm residence on the western property. Although very few trees are located on the site, some of them may be protected under the County Tree Ordinance. Indirect impacts from ground-

disturbing activities within drip lines of protected trees could result if the health of the tree is adversely affected, leading to eventual tree mortality. Under Plan Concept 1, WPWMA has not identified a specific proposed project component that would require immediate removal of trees, but the project assumes that removal could occur in the future. WPWMA would minimize tree removal where possible, but for this analysis, WPWMA has taken a conservative approach and assumes tree damage or removal could conflict with the County Tree Ordinance. This impact would be significant.

Plan Concept 2

Implementation of Plan Concept 2 would be expected to have the same impacts on trees that may be protected by the County Tree Ordinance as Plan Concept 1. WPWMA assumes trees would be removed under Plan Concept 2. This impact would be significant.

Mitigation Measure 7-7: Conflicts with Local Ordinances.

Actions consistent with the following measure from the SAP will be implemented so that the proposed project does not conflict with the County Tree Ordinance:

- **SAP Mitigation Measure 4.4-7a: Avoid or compensate for loss of protected trees.**
  - The County will require future projects, including for offsite improvements, to avoid tree removal or death if feasible and appropriate, through incorporation of these features into project design and planning.
  - All trees retained onsite will be protected from construction-related impacts by placing exclusion fencing 1 foot outside the drip line of retained trees, or 1 foot outside the outer edge of the riparian woodland habitat and maintaining said fencing through the duration of construction.
  - If any trees protected under the County ordinance cannot feasibly be avoided, they will be mitigated through the payment of PCCP land conversion fees and incorporation of its avoidance and minimization measures into the project.

Level of Significance after Mitigation.

Implementation of actions consistent with SAP Mitigation Measure 4.4-7a would reduce significant impacts related to conflicts with County ordinances and policies protecting biological resources to a **less-than-significant** level because it would require projects to avoid protected trees, if feasible, and would require compensation for unavoidable loss of protected trees consistent with the PCCP.

IMPACT 7-8	**Conflicts with an Adopted HCP, NCCP, or Other Approved Local, Regional, or State Habitat Conservation Plan**
	The WPWMA will implement the proposed project as a Covered Activity under the approved PCCP, which is the only Habitat Conservation Plan or Natural Community Conservation Plan that has been adopted for the proposed project area. Therefore, the proposed project would not conflict with an adopted HCP, NCCP, or other approved local, regional, or state habitat conservation plan, and **no impact** would occur.

Plan Concept 1

The proposed project site is within the boundaries of the approved PCCP HCP and NCCP, and the WPWMA would implement the proposed project as a Covered Activity. There are no other adopted HCP, NCCP, or other approved local, regional, or state habitat conservation plans. Therefore, there would be no impact.

Plan Concept 2

Similar to Plan Concept 1, Plan Concept 2 is within the boundaries of the approved PCCP HCP and NCCP and would be implemented as a Covered Activity. There are no other adopted HCP, NCCP, or other approved local, regional, or state habitat conservation plans. Therefore, there would be no impact.

7.4 References

Ahrens, B. 2003. "Rainfall downscaling in an alpine watershed applying a multiresolution approach." *Journal of Geophysical Research*. Vol. 108 (D8). pp. 13–1 to 13–12.

Baldwin, Bruce G., Douglas H. Goldman, David J. Keil, and Robert Patterson, eds. 2012. *The Jepson Manual: Vascular Plants of California*. Berkeley: University of California Press.

California Department of Fish and Game (CDFW). 2012. Staff Report on Burrowing Owl Mitigation. Sacramento, CA. March 7.

California Department of Fish and Wildlife (CDFW). 2020. *California Natural Community List*. September 9. https://nrm.dfg.ca.gov/FileHandler.ashx?DocumentID=153398&inline.

California Department of Fish and Wildlife (CDFW). 2021. California Natural Diversity Database. Accessed January 2021. https://apps.wildlife.ca.gov/rarefind/view/RareFind.aspx.

California Native Plant Society (CNPS). 2021. *Inventory of Rare, Threatened, and Endangered Plants of California*. Accessed June 2021. http://www.rareplants.cnps.org/.

Environmental Laboratory. 1987. *Corps of Engineers Wetlands Delineation Manual*. Technical Report Y 87 1. U.S. Army Engineer Waterways Experiment Station, Vicksburg, MS. NTIS No. AD A176 912. http://www.cpe.rutgers.edu/Wetlands/1987-Army-Corps-Wetlands-Delineation-Manual.pdf.

Federal Emergency Management Agency. 2017. FEMA Flood Map Service Center: Flood zone hazards for the state of California. Accessed May 25, 2017. https://msc.fema.gov/portal/advanceSearch.

Google Earth. 2021. Aerial imagery from selected dates between 1993 and 2021. https://www.google.com/earth/.

Miles, Scott and Charles Goudey, eds. 1997. *Ecological Subregions of California*. United States Department of Agriculture, Forest Service. Pacific Southwest Division. R5-EM-TP-005-Net. San Francisco.

Natural Resources Conservation Service (NRCS). 2021a. *Web Soil Survey: Placer County, California*. http://websoilsurvey.nrcs.usda.gov/app/HomePage.htm.

Natural Resources Conservation Service (NRCS). 2021b. *Official Soil Series Descriptions*. https://soilseries.sc.egov.usda.gov/osdname.aspx.

Placer County. 2013. Countywide General Plan Policy Document. Adopted August 16, 1994; reflects amendments through May 21, 2013. Auburn, CA.

Placer County. 2017. Notice of Intent to Adopt a Mitigation Negative Declaration. Antonio Mountain Ranch Mitigation Bank (PLN16-00064). Placer County CEQA Active Projects. Environmental Coordination Services. January.

Placer County. 2019. *Sunset Area Plan / Placer Ranch Specific Plan Final Environmental Impact Report*. State Clearinghouse #2016112012. October. Prepared by Ascent Environmental, Sacramento, CA.

Placer County. 2020a. P*lacer County Conservation Program Final Environmental Impact Statement/Environmental Impact Report*. May. (ICF 04406.04.) Prepared by ICF, San Francisco, CA.

Placer County. 2020b. "Appendix B: Western Placer County Aquatic Resources Program." *Placer County Conservation Program*. (ICF 04406.04.) Prepared by ICF, San Francisco, CA. February.

Placer County. 2020c. "Appendix A: Western Placer County Habitat Conservation Plan and Natural Community Conservation Plan." *Placer County Conservation Program*. (ICF 04406.04.) Prepared by ICF, San Francisco, CA. February.

Sawyer, John O., Todd Keeler-Wolf, and Julie M. Evans. 2009. *A Manual of California Vegetation. 2nd ed.* California Native Plant Society, Sacramento.

Swainson's Hawk Technical Advisory Committee. 2000. *Recommended Timing and Methodology for Swainson's Hawk Nesting Surveys in California's Central Valley*. May.

U.S. Army Corps of Engineers (USACE). 2008. *Regional Supplement to the Corps of Engineers Wetland Delineation Manual: Arid West Region (Version 2.0)*, ed. J.S. Wakeley, R.W. September.

U.S. Army Corps of Engineers (USACE). 2015. *Final 2015 Regional Compensatory Mitigation and Monitoring Guidelines. South Pacific Division*. January.

U.S. Fish and Wildlife Service (USFWS). 2005. *Recovery Plan for Vernal Pool Ecosystems of California and Southern Oregon*.

U.S. Fish and Wildlife Service (USFWS). 2007. *Vernal Pool Fairy Shrimp (Branchinecta lynchi) 5-year review: Summary and Evaluation*. Sacramento, California.

U.S. Fish and Wildlife Service (USFWS). 2017. *Framework for Assessing Impacts to the Valley Elderberry Longhorn Beetle (Desmocerus californicus dimorphus)*. U.S. Fish and Wildlife Service; Sacramento, California. 28 pp.

U.S. Fish and Wildlife Service (USFWS). 2021a. *Information for Planning and Consultation.* Accessed June 2021. https://ecos.fws.gov/ipac/.

U.S. Fish and Wildlife Service (USFWS). 2021b. "Wetlands Mapper." *National Wetlands Inventory*. https://www.fws.gov/wetlands/. Accessed June 2021.

U.S. Geological Survey (USGS). 2021. *National Hydrography*. Accessed September 2020. http://nhd.usgs.gov/.

Witham, C.W. 2006. *Field Guide to the Vernal Pools of Mather Field, Sacramento County*. California Native Plant Society, Sacramento Valley Chapter, Sacramento, CA.

8. Cultural and Tribal Cultural Resources

This chapter describes the cultural and tribal cultural resources in the proposed project study area and evaluates potential impacts to cultural and tribal cultural resources associated with Plan Concept 1 and Plan Concept 2 of the Renewable Placer: Waste Action Plan.

8.1 Environmental Setting

A cultural resource is defined in *California Public Resources Code* (PRC) Section 21074(a)(1) as any object or specific location of past human activity, occupation, or use that may be tangible or intangible, and identifiable through historical documentation, inventory, or oral evidence. For the purposes of the California Environmental Quality Act (CEQA), cultural resources consist of archaeological resources, historic resources, Native American human remains, and tribal cultural resources.

Archaeological resources include both historic- and prehistoric-era remains of human activity. Historic-era archaeological resources can consist of the remains of structures (for example, cement foundations), features (for example, privies or wells), and sites (for example, trash dumps). Prehistoric archaeological resources can consist of stone tool debris scatters, quarries, habitation sites, temporary camps or rock rings, ceremonial sites, and trails.

Historic resources are elements of the built environment and can include old houses, bridges, historic roads and trails, canals, cemeteries, and electrical infrastructure, such as transmission lines, substations, and generating facilities.

Tribal cultural resources, as defined in PRC Section 21074(a)(1), are resources with cultural value to a California Native American tribe. Tribal cultural resources may include Native American archaeological sites and may therefore be both archaeological and tribal cultural resources but may also include other types of resources such as sacred places or cultural landscapes. The identification and appropriate treatment of tribal cultural resources is determined through consultation with tribes.

This Chapter is based on the *Cultural Resources Technical Report* completed by Jacobs Engineering Group Inc. (Jacobs 2020).

8.1.1 Area of Potential Effects

The proposed project's Area of Potential Effects (APE) encompasses the Western Placer Waste Management Authority's (WPWMA) existing properties, which comprise three sections totaling approximately 928 acres (Figure 8-1). The eastern property, approximately 155 acres, is used for cattle grazing. The central property, approximately 314 acres, encompasses the Western Regional Sanitary Landfill and associated solid waste infrastructure. The western property, approximately 459 acres, is separated into two parts: one is leased to the City of Lincoln for discharge of reclaimed water and is irrigated to grow alfalfa, and the other is leased for model airplane operations and houses a miniature airstrip. The western property also houses a residential complex with a residence, garage, barn, shed, and landscaping.

8.1.2 Methodology

The methods for inventorying cultural resources comprised a literature search, intensive pedestrian survey, and Native American outreach and consultation.

Project Boundary/
Area of Potential Effects

North

0 0.25 0.5

Approximate scale in miles

Figure 8-1. Area of Potential Effects
Draft Environmental Impact Report
Renewable Placer: Waste Action Plan
Placer County, California

Jacobs

BI0213191718SAC 1-3v6

Literature Search.

The preliminary record search of the North Central Information Center (NCIC) of the California Historical Resources Information System (CHRIS) at California State University, Sacramento, was conducted on August 21, 2017 (File # SAC-17-127). The search area included the APE and a 1-mile buffer surrounding the APE. The record search was updated December 13, 2019 (File # PLA-19-120). To complement the CHRIS database of cultural resource studies and resources, a search of the relevant archives provided by NCIC was performed, which included the following:

- Office of Historic Preservation Historic Property Data File and Archaeological Determinations of Eligibility for Placer County (2013)
- California Inventory of Historical Resources (1976 and updates)
- California Historical Landmarks (1996 and updates)
- California Points of Historical Interest (1992 and updates)
- California Department of Transportation (Caltrans) Bridge Survey
- 1855 Government Land Office Plat for Township 11 North, Range 6 East
- 1910 and 1953 Roseville, California United States Geological Survey (USGS) 7.5-minute quadrangle (quad) maps
- Historic Spots in California, Placer County chapter (Kyle 1990)
- Map of Ethnographic Territories prepared by the NCIC based on Wilson and Towne (1978)

Previous cultural resource, ethnographic, and historical studies of relevance to the project area were reviewed, many of which exist as unpublished technical reports and are available through various sources, including NCIC, libraries, and online. Published archaeological syntheses, ethnographic histories, and historical atlases were examined. Historical aerials available from Google Earth and Nationwide Environmental Title Research, LLC (2019) were analyzed for past evidence of cultural modification of the APE. Additional research on the Placer County Tax Assessor's website provided information about the age of buildings in the APE.

Pedestrian Survey.

Archaeologists conducted an intensive pedestrian survey of accessible portions of the APE on December 4, 5, 6, and 11, 2019, in collaboration with two tribal heritage representatives from the United Auburn Indian Community of the Auburn Rancheria (UAIC). Under CEQA PRC Section 21080.3.1, also known as Assembly Bill 52 (AB 52), the lead agency must provide notice to tribes that are traditionally and culturally affiliated with the geographic area of the proposed project if the tribes have requested notice of projects proposed within that area. If tribes request consultation within 30 days upon receipt of the notice, the lead agency must consult with them. Consultation may include discussing the type of environmental review necessary, the identification of tribal cultural resources or sensitive areas in the project area, the significance of the project's impacts to the tribal cultural resources, and alternatives and mitigation measures recommended by the tribes. The UAIC requested consultation and participated in the pedestrian survey as part of the consultation process.

Survey transects were spaced at intervals of 15 meters (49 feet) or less. The ground surface was examined for indications of surface or subsurface cultural materials. Visible ground surface was examined for Native American cultural material (for example, flaked stone tools or tool-making debris, groundstone artifacts, fire-affected rock, dark soil with charcoal or shell, and animal bone), and historic-era evidence such as

structural debris (for example, glass, metal, brick, wood, nails). Exposures of the native soil such as dirt roadbeds, agricultural furrows, and animal disturbance (such as cow hoofprints, trails and wallows, and animal burrows) were examined.

Outreach and Consultation.

A Sacred Lands File search from the Native American Heritage Commission (NAHC) and a list of Native American tribes with traditional and cultural affiliation within the project area was requested on February 14, 2020. Letters requesting information about cultural resources in the project area were sent to three of the four tribal representatives provided in NAHC's response. The outreach was conducted with the following three tribal representatives:

- Regina Cuellar, Chairperson of the Shingle Springs Band of Miwok Indians
- Grayson Coney, Cultural Director of the Tsi Akim Maidu
- Clyde Prout, Chairperson of the Colfax-Todds Valley Consolidated Tribe

No response was received from any of the three identified tribes. Consultation with UAIC, the fourth tribe provided by the NAHC, is in progress. As part of the consultation, UAIC members participated in the pedestrian survey (Section 8.1.2.2) and reviewed the survey results. The UAIC Preservation Department reviewed the survey report and indicated they had no comments or additional concerns (Starkey pers. comm. 2020).

8.1.3 Cultural Resources Setting

Prehistoric Setting.

Little archaeological evidence exists of the Paleoindian Period (11500 to 8550 Before Common Era [BCE]) in the Central Valley (Rosenthal et al. 2007; Dillon 2002). In part, this dearth of evidence is due to the burial or removal of large segments of the Late Pleistocene landscape throughout the central California lowlands by periodic episodes of deposition or erosion (Meyer and Rosenthal 2008; Rosenthal and Meyer 2004a, 2004b; White 2003). Periods of climate change and associated alluvial deposition occurred at the end of the Pleistocene (approximately 9050 BCE) and at the beginning of the early Middle Holocene (approximately 5550 BCE). Holocene alluvium up to 10 meters (33 feet) thick was deposited in some places during the last 5,000 to 6,000 years (Moratto 1984). Evidence from this early period has either been washed away or lies deeply buried, which may in part explain its rarity. The archaeological evidence that is available for the Paleoindian Period primarily consists of basally thinned, fluted projectile points. These points are morphologically similar to the well-dated Clovis points found elsewhere in North America. In the Central Valley, only three archaeological localities have yielded fluted points, which were recovered from remnant features of the Pleistocene landscape. These are the Woolfsen Mound (CA-MER-215) in Merced County, Tracey Lake in San Joaquin County, and Tulare Lake basin in Kings County. All three are quite distant from the project APE.

Archaic Setting.

Similar to the Paleoindian Period in the Central Valley, depositional contexts that might have preserved archaeological evidence from the Lower Archaic Period (8550 to 5550 BCE) have been deeply buried or washed away. The period is represented by a single site: CA-KER-116 in Kern County on the ancient shoreline of Buena Vista Lake. Stratified cultural deposits at the site have yielded a stemmed projectile point, chipped stone crescents, and the remains of fish, birds, and shellfish. Although abundant milling slabs and handstones have been recovered from Lower Archaic Period foothill sites in eastern Contra Costa County (CA-CCO-637; Meyer and Rosenthal 1998) and Calaveras County (Skyrocket site

CA-CAL-629/630; LaJeunesse and Pryor 1996), no milling tools or plant remains have been found in the valley.

For the first 3,000 years of the Middle Archaic Period (5550 to 550 BCE), archaeological sites on the valley floor are relatively scarce, in part because of natural geomorphic processes that also obscured the land surfaces from the Lower Archaic and Paleoindian periods. Valley sites are more common after 600 BCE. By contrast, Middle Archaic archaeological deposits were preserved in foothill contexts and provide information about the material culture of this period (Rosenthal et al. 2007).

The archaeological record in the valley and foothills indicates that the subsistence system during this period included a wide range of natural resources (for example, plants, small and large mammals, fish, and waterfowl), which suggests that people followed a seasonal foraging strategy (Fredrickson 1973; Heizer 1949; Ragir 1972; Moratto 1984). Some researchers, such as Moratto (1984), suggest populations may have occupied lower elevations during the winter and shifted to higher elevations in the summer. Others (Rosenthal et al. 2007) also suggest there was increasing residential stability along Central Valley river corridors during the Middle Archaic.

Upper Archaic Period (550 BCE to Common Era [CE] 1100) sites are more plentiful throughout the valley and the foothills (Rosenthal et al. 2007). Preference for technology to process plant materials shifted, and groundstone mortars and pestles became more plentiful than slab milling stones and handstones. Archaeobotanical remains from buried deposits also increase. The shift in processing technology has been interpreted as a shift from a preference for wild grass grains and seeds (milling slabs and handstones) to acorns (mortars and pestles) as a dietary staple (Fredrickson 1974; Moratto 1984; Wohlgemuth 2004). Populations continued to exploit a variety of natural resources, pursuing hunting as well as plant food processing. Large, mounded villages that developed around 2,700 years ago in the Sacramento Delta region included accumulations of habitation debris and features, such as hearths, house floors, rock-lined ovens, and burials (Rosenthal et al. 2007). The remains of a variety of aquatic resources in the large shell mounds that developed near salt- and freshwater include the intensive exploitation of shellfish.

The number of archaeological sites increases in the Emergent Period (CE 1100 to Historic) in the lower Sacramento Valley and Delta region, as do the number and diversity of artifacts (Moratto 1984; Rosenthal et al. 2007). The Emergent Period was shaped by cultural innovations. Dart and atlatl technologies were replaced by the introduction of the bow and arrow. Fishing technology diversified and became more elaborate. The social and ceremonial organization also became more elaborate, as seen in differences in the number and diversity of grave goods associated with burials. The material culture and cultural patterns discovered in the Emergent Period archaeological record are reflected in the cultural traditions ethnographically known from historic period Native American groups (Rosenthal et al. 2007).

The faunal and botanical remains recovered at Emergent Period archaeological sites indicate the use of a diverse assortment of mammals, fish, and plant parts, including acorns and pine nuts. Hopper mortars, shaped mortars and pestles, and bone awls used to produce coiled baskets are among the variety of artifacts recovered from Emergent Period sites. The toolkit during this period also included bone fish hooks, harpoons, and gorge hooks for fishing, as well as the bow and arrow for hunting. Small, Gunther-barbed series projectile points have been found at sites dating to the early part of the period, while desert-side notched points appear later in the period (Rosenthal et al. 2007). The Stockton serrated arrow point also appears in archaeological assemblages dating to this period. Pottery appears for the first time, representing a development from the uses of clay in previous periods.

Numerous villages, ranging in size from small (housing 8 to 10 individuals) to large (housing as many as 500 individuals), were established along the valley floor sloughs and river channels and along the streams

in the foothills. House floors or other structural remains have been preserved at some sites dating to this period (Rosenthal et al. 2007). The large village size and density of associated occupational debris and burials have been interpreted as an increase in sedentism and population growth. This trend appears related to the development of social stratification, with an elaborate social and ceremonial organization most clearly seen in the differential density, distribution, and elaboration of grave goods associated with Emergent Period burials. Examples of items associated with rituals and ceremonials include flanged tubular pipes and baked clay effigies representing animals and humans. Mortuary practices changed to include flexed burials, cremation of high-status individuals, and pre-internment burning of offerings in a burial pit (Fredrickson 1973; Moratto 1984). Currency, in the form of clamshell disk beads, also developed during this period together with extensive exchange networks.

Ethnographic Setting.

This discussion of the ethnographic setting is compiled from the *Final Environmental Impact Report for the Sunset Area Plan/Placer Ranch Specific Plan* (Sunset Area Plan) (Placer County 2019b) and ethnographic sources (such as Kroeber 1925; Lightfoot and Parrish 2009; Mead 2014; Wilson and Towne 1978). The project APE lies in the plains of the Central Valley in the territory of the Nisenan, also known as the southern Maidu. The Maidu group comprises three tribelets associated with different languages. These are the Maidu, Konkow, and southern Maidu. The southern Maidu refer to themselves as Nisenan (Kroeber 1925). The ethnographically documented Nisenan territory extends from the plains of the Sacramento Valley, east of the Sacramento River between the North Fork Yuba River and Cosumnes River on the north and south, respectively, and extends east into the foothills of the Sierra Nevada Range. Maidu and Konkow territories lie to the north. The geographic distribution suggests that Nisenan spread south from the linguistic homeland of the Maidu, and this is supported by the presence in the Nisenan language of a significant number of widespread central California loan words that are not present in Maidu or Konkow (Golla 2007).

The spread of the Nisenan south into Miwok territory is believed to have occurred only within the past few centuries and may have been in progress at the time of contact with non-Indigenous people. The spread likely occurred after the traditional differences between the valley and foothill Maidu had developed.

The Nisenan language has three main dialects, consisting of the Northern Hill, Southern Hill, and Valley Nisenan. The dialects correspond with distinct Hill and Valley material culture traditions. The project area is associated with the Valley Nisenan, known from ethnographic studies to have occupied both large village sites with as many as 500 individuals, and small clusters of villages of closely related families (Wilson and Towne 1978). Villages were generally on low, natural rises along streams and rivers or on gentle, south-facing slopes. The semipermanent or winter villages, as well as seasonally occupied campsites, were used at various times during the seasonal round of subsistence activities associated with hunting, fishing, and gathering plant resources. The location of the village known as *Ba ka cha*, which was apparently occupied at the time of contact with non-Indigenous peoples in the early 1800s, correlates with the recorded location of an archaeological site in the southeastern section of the City of Rocklin. No ethnographically documented village sites on Wilson and Towne's map (1978) are located within or in the immediate vicinity of the project APE.

Traditional village structures included conical, circular, or dome-shaped houses, as well as acorn granaries, winter grinding houses, ceremonial or dance houses, and sweathouses. Structures were made by covering a pole framework with bunches of grass, woven fiber (reed) mats, earth, or any combination thereof. The floors of some structures were excavated below ground surface as much as a meter (a little over 3 feet), and granaries were sometimes raised above the ground surface to discourage pests such as rodents from

eating the food stores. Nisenan mortuary practices included cremation and burial in a separate cemetery area.

Like the majority of Native Californians, the Nisenan relied on acorns as a staple food, which were collected in the fall and then stored in granaries, but they are known to have practiced polyphagy, relying on multiple staple foods (Kroeber 1929). The Nisenan maintained individual or family-level ownership over some oak trees and the fruit they bore (Lightfoot and Parrish 2009). Large and small mammals, such as pronghorn antelope, deer, tule elk, black bears, cottontails, and jackrabbits, among other species, were hunted by individuals or by communal groups. Game birds, waterfowl, and fish, particularly salmon, were also important components of the Nisenan diet. In addition to acorns, plant resources included pine nuts, buckeye nuts, hazelnuts, fruits, berries, seeds, and underground tubers such as Brodiaea. Many of these important plant resources would have been available seasonally in the project area, associated with the vernal pool and seasonal wetland plant communities.

The Nisenan employed a variety of tools, implements, and enclosures for hunting and collecting natural resources. The bow and arrow, snares, traps, nets, and enclosures or blinds were used for hunting land mammals and birds. For fishing, they made canoes from tule reeds, balsa, or logs, and used harpoons, hooks, nets, and basketry traps. To collect plant resources, the two groups used sharpened digging sticks, long poles for dislodging acorns and pinecones, and a variety of woven tools (seed beaters, burden baskets, and carrying nets). Foods were processed with a variety of tools, such as bedrock mortars, cobblestone pestles, anvils, and portable stone or wooden mortars that were used to grind or mill acorns and seeds. Additional tools and implements included knives, leaching baskets and bowls, woven parching trays, and woven strainers and winnowers. The Nisenan and neighboring groups participated in an extensive east-west trade network between the coast and the Great Basin. From coastal groups, marine shell (Olivella and Haliotis) and steatite moved eastward, while salt and obsidian traveled westward from the Sierras and Great Basin. Basketry, an important trade item, moved in both directions (Wilson and Towne 1978).

The traditional culture and lifeways of the Valley Nisenan were disrupted beginning in the early 1800s. Although Spanish explorers entered Nisenan territory as early as 1808, records do not exist of the forced movement of Nisenan to the missions. During the Mexican period, native peoples were affected by land grant settlements and decimated by foreign disease epidemics that swept through the densely populated Central Valley. An epidemic that swept the Sacramento Valley in 1833 caused the death of an estimated 75 percent of the Valley Nisenan population, wiping out entire villages (Kroeber 1929). In the heart of Nisenan territory, the discovery of gold in 1848 at Sutter's Mill on the American River near Coloma had a devastating impact on the remaining Nisenan, as well as other groups of Native Americans in the Central Valley and along the Sierra Nevada foothills. By 1850, the Nisenan lands, resources, and way of life was overrun by the steady influx of nonnative people stimulated by the Gold Rush. The surviving Nisenan retreated to the foothills and mountains or labored for the growing ranching, farming, and mining industries. Nisenan descendants reside on the Auburn, Berry Creek, Chico, Enterprise, Greenville, Mooretown, Shingle Springs, and Susanville rancherias, as well as on the Round Valley Reservation. The UAIC, a federally recognized Miwok and Nisenan Maidu tribe, maintains active ties to the land in the project area, which they have identified as part of a geographic area with which the tribe is traditionally and culturally affiliated. Those ties include cultural, land stewardship, investment, and infrastructure projects. The UAIC and some members of various rancherias specialize in tribal heritage preservation and actively participate by consulting in the project planning process and by monitoring construction and other ground-disturbing projects within their area of affiliation.

Historic Setting.

The earliest settlers in the general project vicinity arrived in the late 1840s, as miners poured into the region in search of placer deposits. Gold was discovered by Claude Chana in Auburn Ravine, north of the project APE, in 1848. Placer County was organized in 1851 from parts of neighboring Sutter and Yuba counties and was named after its principal economy at that time, placer mining. Auburn was named as the County seat.

By the mid-1850s, the area was sparsely settled and dotted with small-scale ranches. By the mid-1860s, the construction and development of the railroad industry played a significant role in the region's development. The tracks of the Central Pacific Railroad (later Southern Pacific Railroad [SPRR]) reached Roseville and Rocklin in 1864 (Hoover et al. 2002). Rocklin became the principal granite-producing point in the Sacramento Valley, with the first quarry opening in 1863 and operations blossoming into 15 separate quarrying companies by 1904. Roseville prospered as a principal rail head that provided the frontier towns with goods and services. When the SPRR moved its major locomotive terminal from Rocklin to Roseville in 1908, that town expanded to one of the largest railroad centers in the country.

The railroad also contributed to the growth of Placer County's agricultural industry of mainly fruits and nuts, since the rail line provided access to a large market east of the Sierra Nevada Range (Lardner and Brock 1924). Incorporated in 1906, the Pacific Fruit Express Company was a joint SPRR and Union Pacific Railroad enterprise (Online Archive of California 2009). The company operated ice plants and docks, as well as car and repair shops throughout the west, and shipped produce in railcars refrigerated with ice. The first units of the Pacific Fruit Express Ice Plant were erected in 1909, and by 1920, it was known as the world's largest artificial ice plant (Oliver 2006).

Regional developments in the gold industry related to dredge mining, conducted from 1898 through 1962, had no apparent impact on the project APE. The area surrounding the APE was primarily agricultural. Except for the Western Regional Sanitary Landfill, which was established in 1978, the project APE has been used for agriculture, including cattle grazing and cultivation of grains.

8.2 Regulatory Setting

8.2.1 Federal

Section 106 of the National Historic Preservation Act requires federal agencies to consider the effects of federally funded or federal permit-approved undertakings that have the potential to have an impact on historic properties (any district, site, building, structure, or object that is listed in, or eligible for listing in, the National Register of Historic Places [NRHP], and provides the State Historic Preservation Officer [SHPO], affected tribes, and other consulting parties an opportunity to comment). An adverse effect on a historic property is defined by an activity that may alter, directly or indirectly, any of the characteristics of the historic property that render it eligible for inclusion in the NRHP. The alteration of characteristics is considered an adverse effect if it may diminish the integrity of the historic property's location, design, setting, materials, workmanship, feeling, or association. The Section 106 process is presented in 36 *Code of Federal Regulations* (CFR) 800 and consists of four basic steps:

A. Initiate process by coordinating with other environmental reviews, consulting with the SHPO, identifying and consulting with interested parties, and identifying points in the process to seek input from the public and to notify the public of proposed actions (36 CFR 800).

B. Identify cultural resources and evaluate them for NRHP eligibility, resulting in the identification of historic properties (36 CFR 800.4).

C. Assess effects of the project on historic properties by applying the criteria of adverse effect (36 CFR 800.5).

D. Resolve adverse effect (36 CFR 800.6) through continued consultation with the SHPO and interested parties regarding adverse effects on historic properties, often resulting in a memorandum of agreement.

The following conditions must be met for a property to be considered for NRHP eligibility:

- The property is at least 50 years old (however, properties under 50 years of age that are of exceptional importance or are contributors to a district can also be included in the NRHP).
- It retains integrity of location, design, setting, materials, workmanship, feeling, and associations. Archaeological resources are often evaluated in terms of the integrity of the spatial and temporal associations between the individual elements of the deposit or feature that contribute to interpretations of chronology and past behavioral associations.

In addition, the property must possess at least one of the following criteria (36 CFR 60.4) for determining NRHP eligibility:

A. Association with events that have made a significant contribution to the broad patterns of history (events).

B. Association with the lives of persons significant in the past (persons).

C. Distinctive characteristics of a type, period, or method of construction, or represents the work of a master, or possesses high artistic values, or represents a significant, distinguishable entity whose components may lack individual distinction (architecture).

D. Has yielded, or may be likely to yield, information important to prehistory or history (information potential).

Listing in the NRHP does not entail specific protection or assistance for a property, but it does guarantee recognition in planning for federal or federally assisted projects, eligibility for federal tax benefits, and qualification for federal historic preservation assistance. Additionally, project effects on properties listed in the NRHP must be evaluated under CEQA.

The National Register Bulletin also provides guidance on the evaluation of archaeological site significance. If a heritage property cannot be placed within a theme or period, and thereby lacks focus, it is considered not eligible for listing in the NRHP. In further expanding upon the generalized NRHP criteria, evaluation standards for linear features (such as roads, trails, fence lines, railroads, ditches, and flumes) are considered in terms of four related criteria that account for specific elements that define engineering and construction methods of linear features: (1) size and length, (2) presence of distinctive engineering features and associated properties, (3) structural integrity, and (4) setting. The highest probability for NRHP eligibility exists within the intact longer segments where multiple criteria coincide.

8.2.2 State

California Environmental Quality Act.

CEQA requires public agencies to consider the effects of their actions on historical resources, unique archaeological resources, and tribal cultural resources. Under PRC Section 21084.1, a "project that may cause a substantial adverse change in the significance of an historical resource is a project that may have a

significant effect on the environment." Section 21083.2 requires agencies to determine whether proposed projects would have effects on unique archaeological resources.

Historical Resources.

Historical resource is a term with a defined statutory meaning (PRC, Section 21084.1 and State CEQA Guidelines, Section 15064.5[a]). Under State CEQA Guidelines Section 15064.5(a), historical resources include the following:

A. A resource listed in or determined to be eligible by the State Historical Resources Commission for listing in, the California Register of Historical Resources (CRHR) (PRC, Section 5024.1).

B. A resource included in a local register of historical resources, as defined in Section 5020.1(k) of the PRC or identified as significant in a historical resource survey meeting the requirements of Section 5024.1(g) of the PRC, shall be presumed to be historically or culturally significant. Public agencies must treat any such resource as significant unless the preponderance of evidence demonstrates that it is not historically or culturally significant.

C. Any object, building, structure, site, area, place, record, or manuscript that a lead agency determines to be historically significant or significant in the architectural, engineering, scientific, economic, agricultural, educational, social, political, military, or cultural annals of California may be considered to be a historical resource, provided the lead agency's determination is supported by substantial evidence in light of the whole record. Generally, a resource will be considered by the lead agency to be historically significant if the resource meets the criteria for listing in the CRHR (PRC Section 5024.1), including one or more of the following:

    a) Is associated with events that have made a significant contribution to the broad patterns of California's history and cultural heritage.

Is associated with the lives of persons important in our past.

Embodies the distinctive characteristics of a type, period, region, or method of construction, or represents the work of an important creative individual, or possesses high artistic values.

Has yielded, or may be likely to yield, information important in prehistory or history.

The fact that a resource is not listed in, or determined to be eligible for listing in, the CRHR, not included in a local register of historical resources (under Section 5020.1[k] of the PRC), or identified in a historical resources survey (meeting the criteria in Section 5024.1[g] of the PRC) does not preclude a lead agency from determining that the resource may be a historical resource as defined in PRC Section 5020.1(j) or 5024.1.

Unique Archaeological Resources.

CEQA requires lead agencies to consider whether projects will affect unique archaeological resources. PRC Section 21083.2(g) defines a unique archaeological resource as an archaeological artifact, object, or site about which it can be clearly demonstrated that, without merely adding to the current body of knowledge, there is a high probability that it meets any of the following criteria:

A. Contains information needed to answer important scientific research questions, and there is a demonstrable public interest in that information.

B. Has a special quality, such as being the oldest of its type or the best available example of its type.

C. Is directly associated with a scientifically recognized important prehistoric or historic event or person.

Tribal Cultural Resource.

AB 52, signed by the California governor in September 2014, establishes a new class of resources under CEQA: tribal cultural resources. AB 52, as provided in PRC Sections 21080.3.1, 21080.3.2, and 21082.3, requires that lead agencies undertaking a CEQA review must, upon written request of a California Native American tribe, begin consultation prior to the release of a draft environmental impact report or notice of intent to adopt a negative declaration or mitigated negative declaration. CEQA requires lead agencies to consider whether projects will affect tribal cultural resources. PRC Section 21074 defines tribal cultural resources as either of the following:

A. Sites, features, places, cultural landscapes, sacred places, and objects with cultural value to a California Native American tribe that are either of the following:
    1) Included or determined to be eligible for inclusion in the CRHR.
    2) Included in a local register of historical resources as defined in subdivision (k) of Section 5020.1.

B. A resource determined by the lead agency, in its discretion and supported by substantial evidence, to be significant under criteria set forth in subdivision (c) of Section 5024.1. In applying the criteria set forth in subdivision (c) of Section 5024.1 for the purposes of this paragraph, the lead agency shall consider the significance of the resource to a California Native American tribe.

C. A cultural landscape that meets the criteria of subdivision (a) is a tribal cultural resource to the extent that the landscape is geographically defined in terms of the size and scope of the landscape.

D. A historical resource described in Section 21084.1, a unique archaeological resource as defined in subdivision (g) of Section 21083.2, or a nonunique archaeological resource as defined in subdivision (h) of Section 21083.2 may also be a tribal cultural resource if it conforms with the criteria of subdivision (a).

California Register of Historical Resources.

Properties in California that are listed in or formally determined eligible for listing in the NRHP are eligible for listing in the CRHR. The CRHR is a listing of State of California resources that are significant within the context of California's history. The CRHR is a statewide program with a scope and with criteria for inclusion that are like those of the NRHP. In addition, properties designated under municipal or county ordinances are also eligible for listing in the CRHR.

A historical resource must be significant at the local, state, or national level under one or more of the criteria defined in the *California Code of Regulations* Title 15, Chapter 11.5, Section 4850 to be included in the CRHR. The CRHR criteria are like the NRHP criteria and are tied to CEQA, because any resource that meets the following criteria is also considered a significant historical resource under CEQA.

The CRHR uses four evaluation criteria for determining the significance of a cultural resource:

A. It is associated with events or patterns of events that have made a significant contribution to the broad patterns of local or regional history or the cultural heritage of California or the U.S.

B. It is associated with the lives of persons important to local, California, or national history.

C. It embodies the distinctive characteristics of a type, period, region, or method of construction; represents the work of a master; or possesses high artistic values.

D. It has yielded, or has the potential to yield, information important to the prehistory or history of the local area, California, or the nation.

Similar to the NRHP, a resource must meet one of these criteria and retain integrity to be considered significant, and thus, a historical resource. The CRHR uses the same aspects of integrity as the NRHP.

California Native American Historical, Cultural, and Sacred Sites Act

The California Native American Historical, Cultural, and Sacred Sites Act applies to both state and private lands. The act requires that upon discovery of human remains, construction or excavation activity cease and the County Coroner be notified. If the remains are of a Native American, the coroner must notify the NAHC, which notifies and has the authority to designate the Most Likely Descendant (MLD) of the deceased. The act stipulates the procedures that the descendants may follow for treating or disposing of the remains and associated grave goods.

***Health and Safety Code,* Sections 7052 and 7050.5**

Section 7052 of the *Health and Safety Code* states that the disturbance of Native American cemeteries is a felony. Section 7050.5 requires that construction or excavation be stopped near discovered human remains until the coroner can determine whether the remains are those of a Native American. If the remains are determined to be those of a Native American, the coroner must contact the NAHC.

***Public Resources Code*, Section 5097**

PRC Section 5097 specifies the procedures to be followed if human remains are unexpectedly discovered on nonfederal land. The disposition of Native American burial falls within the jurisdiction of the NAHC. Section 5097.5 of the code states the following:

> *No person shall knowingly and willfully excavate upon, or remove, destroy, injure, or deface any historic or prehistoric ruins, burial grounds, archaeological or vertebrate paleontological site, including fossilized footprints, inscriptions made by human agency, or any other archaeological, paleontological or historical feature, situated on public lands, except with the express permission of the public agency having jurisdiction over such lands. Violation of this section is a misdemeanor.*

8.2.3 Local

The WPWMA is a Joint Powers Authority (JPA) composed of Placer County and the cities of Lincoln, Rocklin, and Roseville to own and operate a regional recycling facility and sanitary landfill. As a JPA, the WPWMA considers local regulations and consults with local agencies, but the County and city regulations are not applicable, because the County and cities do not have jurisdiction over the proposed project. Accordingly, the following discussion of local goals and policies associated with cultural resources is provided for informational purposes only.

Placer County General Plan.

The Recreation and Cultural Resources section (Section 5) of the *Placer County General Plan* (Placer County 2013) includes a goal to "identify, protect, and enhance Placer County's important historical, archaeological, paleontological, and cultural sites and their contributing environment." This plan also includes policies to protect and enhance cultural resources through various means, including implementing incentive programs for private property owners, educating the public, avoiding and mitigating cultural resource impacts in discretionary development projects, coordinating with the local Native American community and the NAHC, and assisting private citizens seeking historic landmark

designations for their property. The following policies pertaining to cultural resources contained in the *Placer County General Plan* (2013) are relevant to the project:

Policy 1.I.1. The County shall require that significant natural, open space, and cultural resources be identified in advance of development and incorporated into site-specific development project design. The Planned Residential Developments and the Commercial Planned Development provisions of the Zoning Ordinance can be used to allow flexibility for this integration with valuable site features.

Policy 5.D.3. The County shall solicit the views of the NAHC, State Office of Historic Preservation, North Central Information Center, and/or the local Native American community in cases where development may result in disturbance to sites containing evidence of Native American activity and/or to sites of cultural importance.

Policy 5.D.6. The County shall require that discretionary development projects identify and protect from damage, destruction, and abuse, important historical, archaeological, paleontological, and cultural sites and their contributing environment. Such assessments shall be incorporated into a countywide cultural resource data base, to be maintained by the Department of Museums.

Policy 5.D.7. The County shall require that discretionary development projects are designed to avoid potential impacts to significant paleontological or cultural resources whenever possible. Unavoidable impacts, whenever possible, shall be reduced to a less than significant level and/or shall be mitigated by extracting maximum recoverable data. Determinations of impacts, significance, and mitigation shall be made by qualified archaeological (in consultation with recognized local Native American groups), historical, or paleontological consultants, depending on the type of resource in question.

***Placer County Code*.**

Article 15.60, Cultural and Historic Resources Preservation, of the *Placer County Code* is intended to promote the general welfare of the public through one or more of the following:

- The protection, enhancement, perpetuation and use of historic structures and/or other cultural resources (a) that represent past eras, events, and persons important in prehistory or history, (b) which provide significant examples of architectural styles of the past or are landmarks in the history of architecture, (c) which are unique and irreplaceable assets to the county and its communities, or (d) which provide for this and future generations examples of the physical surroundings in which past generations lived.
- The development and maintenance of complementary settings and environment for such structures and/or districts.
- The preservation and encouragement of the county's varied architectural styles, reflecting the cultural, social, economic, political, and architectural phases of its history.
- The enhancement of property values, the stabilization of communities and areas of the county, the increase of economic and financial benefits to the county and its inhabitants, and the promotion of the tourist trade and interest.
- The integration of the preservation of cultural resources into public and private land use management and development processes.
- The educational and cultural enrichment of this and future generations by fostering knowledge of our heritage.

- The promotion and encouragement of continued private ownership and utilization of such structures so the objectives listed above can be attained under this policy.
- The identification and resolution of conflicts between the preservation of cultural resources and alternative land uses, as early as possible in the planning process.
- The promotion of public awareness of the benefits of preservation and the encouragement of public participation in identifying and preserving historic, architectural and archaeological resources thereby increasing community pride in the county's cultural heritage.
- The establishment of a basis for coordinating the goal of the preservation of cultural resources, historic structures and historic districts with the need to set standards for and implement other elements of the county's plans, policies, and programs.

Sunset Area Plan.

The goals and policies of the Cultural Resources section of the Sunset Area Plan aim to identify a framework by which cultural resources are determined to be present or absent and to provide direction on how cultural resources are to be protected if they are identified. The following goal and policies pertaining to cultural resources contained in the *Sunset Area Plan* (Placer County 2019a) are relevant to the project:

Goal

CR-1: To identify and protect the significant cultural resources of the Sunset Area, including paleontological, archaeological, historical, and tribal cultural resources.

Policies

CR-1.1: Cultural Resource Coordination and Education. In areas with a moderate to high degree of sensitivity for cultural resources, based on location or previous investigations or in areas where buildings and structures are more than 45 years old, the County shall require a cultural resource assessment of the site by a qualified professional before construction activities begin. The assessment would include preparing archaeological and historical survey reports and conducting a paleontological record search using an appropriate database, such as the University of California, Museum of Paleontology. Archaeological and historical sites and materials shall be evaluated and recorded on standard DPR 523-series forms in accordance with NRHP/CRHR criteria. The evaluation report shall be completed by a qualified archaeologist, architectural historian, or historical architect who meets the Secretary of the Interior's Professional Qualifications for Archaeology and Historic Preservation, as appropriate, and submitted to Placer County. Project sponsors shall follow recommendations identified in the survey.

CR-1.5: Sensitive Locations for Cultural Resources. The County shall consider, at a minimum, the following areas to be sensitive areas for the presence of cultural resources:

A. Areas with existing riparian resources.

B. Areas with a clear and distinct floodplain.

C. Areas with identifiable historical remains (e.g., old foundations, rock walls, old abandoned equipment).

D. Areas adjacent to properties which have previously had cultural resource assessments which resulted in the identification of significant resources.

E. Areas with a Modesto, Riverbank, Turlock Lake/Mehrten Formation geologic condition (in descending order of sensitivity).

CR-1.6: Minimize Cultural Resource Impacts. The County shall require that discretionary development projects are designed to avoid potential impacts to significant cultural resources whenever possible. Determinations of impacts, significance, and mitigation shall be made by qualified archaeological, tribal cultural, historical, or paleontological consultants (in consultation with recognized local Native American groups), depending on the type of resource in question.

A. If archaeological resources eligible for inclusion in the NRHP or CRHR are identified, an assessment of project impacts on these resources as well as detailed measures to avoid or minimize impacts to these resources will be included in an evaluation report. These measures could include project redesign, construction monitoring by a qualified archaeologist, avoidance of sites, preservation in place, or data recovery. These measures shall be developed and implemented in coordination with the Placer County Planning Services Division and Native American representatives, as appropriate.

B. If historical resources eligible for inclusion in the NRHP or CRHR are identified, an assessment of project impacts on these resources will be included in an evaluation report that also will identify detailed measures to avoid impacts. If avoidance of a significant architectural/built environment resource is not feasible, additional mitigation options include specific design plans for historic districts or plans for alteration or adaptive reuse of a historical resource that follows the Secretary of the Interior's Standards for the Treatment of Historic Properties with Guidelines for Preserving, Rehabilitating, Restoring & Reconstructing Historic Buildings. If a significant historic building or structure is proposed for major alteration or renovation, or to be moved and/or demolished, a qualified architectural historian shall be retained to thoroughly document the structure and associated landscaping and setting. Documentation shall include still and video photography and a written documentary record of the building to the standards of the Historic American Building Survey or Historic American Engineering Record, including accurate scaled mapping, architectural descriptions, and scaled architectural plans, if available. The record shall be accompanied by a report containing site-specific history and appropriate contextual information. This information shall be gathered through site-specific and comparative archival research and through oral history collection as appropriate.

C. If tribal cultural resources eligible for inclusion in the NRHP or CRHR are identified in the proposed assessment of project impacts, then detailed measures to avoid or minimize impacts to these resources shall be included. These measures could include dedicated conservation easements per SB18; project alternatives, or redesign; additional construction monitoring by a qualified tribal monitor; avoidance of sites; preservation in place; or data recovery. These measures shall be developed and implemented in coordination with the Placer County Planning Services Division and Native American representatives, as appropriate.

CR-1.7: Discovery of Cultural Resources During Construction. The County shall require all new development to suspend construction activities and contact the County when any cultural resources (e.g., shell, artifacts, architectural remains, significant paleontological resources) are discovered. In the event archaeological, tribal cultural, historical, or paleontological resources are discovered, the County shall retain a qualified cultural resources specialist or paleontologist to assess the finds and develop mitigation measures for the protection, recordation, or removal of the cultural resources or paleontological resources. These measures may also include consultation with local Native American communities and the Native American Heritage Commission on the cultural find, if warranted. If the appropriate specialist determines that the find does not meet standards of significance for cultural resources (as defined in the State CEQA Guidelines Section 15064.5), construction may proceed. If the appropriate specialist

determines that the find does meet the standards of significance for cultural resources, SAP Policy CR-1.6, Minimize Cultural Resource Impacts, shall be implemented.

CR-1.8 Discovery of Burials During Construction. The County shall require all new development to suspend construction activities in the area of the discovery and contact the County when human remains are discovered. In such cases, County shall contact the County Coroner, the Native American Heritage Commission (NAHC), and, if the remains are determined to be Native American, the most likely descendant (MLD). The County and the applicant will coordinate the appropriate treatment and disposition of the remains with the MLD assigned by NAHC.

8.3 Impact Analysis and Mitigation Measures

8.3.1 Thresholds of Significance

The thresholds of significance for assessing impacts to cultural resources come from the CEQA Environmental Checklist. The CEQA Checklist asks whether the project would do the following:

- Cause a substantial adverse change in the significance of a historical resource pursuant to Section 15064.5?
- Cause a substantial adverse change in the significance of an archeological resource pursuant to Section 15064.5?
- Disturb any human remains, including those interred outside of formal cemeteries?

State regulations affecting cultural resources include PRC Sections 21083.2 and 21084.1, and CEQA Guidelines Section 15064.5 and Appendix G. CEQA requires the lead agency to carefully consider the effects a project may have if it causes a substantial adverse change in the significance of a historic or archaeological resource.

Cultural resources as defined in CEQA include prehistoric- and historic-era archaeological sites, districts, and objects; historic buildings, structures, objects, and districts; and traditional and cultural sites or the locations of important historical events. CEQA Guidelines Section 15064.5 states that a project may have a significant environmental effect if it causes a substantial adverse change in the significance of a historical resource. Additionally, the lead agency must consider properties eligible for listing in the CRHR or that are defined as a unique archaeological resource in PRC Section 21083.2.

For tribal cultural resources, the CEQA Checklist asks whether the project would do the following:

- Cause a substantial adverse change in the significance of a tribal cultural resource, defined in PRC section 21074 as either a site, feature, place, cultural landscape that is geographically defined in terms of the size and scope of the landscape, sacred place, or object with cultural value to a California Native American tribe, and that is
    - i) Listed or eligible for listing in the CRHR, or in a local register of historical resources as defined in PRC Section 5020.1(k).
    - ii) A resource determined by the lead agency, in its discretion and supported by substantial evidence, to be significant pursuant to criteria set forth in subdivision (c) of PRC Section 5024.1. In applying the criteria set forth in subdivision (c) of *Public Resource Code* Section 5024.1, the lead agency shall consider the significance of the resource to a California Native American tribe.

8.3.2 Findings

The cultural resources technical inventory comprised the literature search (including CHRIS records search), intensive pedestrian survey, and Native American consultation. The inventory and assessment identified two built environment resources and two isolated archaeological artifacts within the APE that are recommended as not eligible for listing in either the NRHP or the CRHR (Table 8-1).

Table 8-1. NRHP and CRHR Eligibility of Cultural Resources Identified within the APE

Resource Name	Identifier	Description	Evaluation of Eligibility	Reference
Fiddyment Road	P-31-001422 CA-PLA-1102H	Two-lane paved road segment	Not eligible	Autry 2004a; Jacobs 2020
PG&E Rio Oso-Hurley/Rio Oso-Tesla Transmission Line	P-31-005857	Transmission line segment	Not eligible	Autry 2004b; Jacobs 2020
Prehistoric flake	Iso-1	Chert flake	Not eligible	Jacobs 2020
Prehistoric scraper	Iso-2	Chert scraper	Not eligible	Jacobs 2020

Fiddyment Road (P-31-001422).

The combined 2017 and 2019 NCIC CHRIS record searches yielded a single cultural resource, a segment of Fiddyment Road (P-31-001422; CA-PLA-1102H), within the APE. The resource, a two-lane, paved road with graveled shoulders and parallel roadside ditches, was first recorded between Pleasant Grove Crossing in the south and Moore Road in the north, including the segment in the project APE that extends between Sunset Boulevard West in the south, and East Catlett Road in the north (Derr and Derr 1996). According to Derr, the road was established by at least 1908, the date of survey for the 1910 USGS Roseville 7.5-minute quad map. The road was named for a prominent local ranching family and serves as a major roadway for the farming area (Derr and Derr 1996). Segments of Fiddyment Road were in place as early as 1887 (Uren 1887). Autry (2004a) resurveyed and evaluated the road and recommended the resource be considered ineligible for listing in either the NRHP or the CRHR. Autry further found that the road did not appear to be locally significant, did not serve as a thoroughfare, providing only local access, and was not associated with trends or events in transportation development or regional or local economic development (Criterion A/1).

Though named for a prominent ranching family, the road itself does not have any significant association with the family (Criterion B/2). The road is a simple two-lane paved road of a ubiquitous type and does not represent an engineering achievement at the time it was laid out (Criterion C/3). Further, the road has not yielded, nor does it appear likely to yield, information important in prehistory or history (Criterion D/4) (Autry 2004a). The narrow road has been repeatedly maintained and improved by widening, upgrading, and repaving, and no indications of the original road segment are observable. Pappas and Webb (2015) reviewed a 1-mile segment of the road immediately to the south of the project APE in Section 7 of T11N, R6E, and also concluded that it was not eligible for listing in either the CRHR or the NRHP.

PG&E Rio Oso-Hurley/Rio Oso-Tesla Transmission Line (P-31-005857).

A second cultural resource, the PG&E Rio Oso-Hurley/Rio Oso-Tesla Transmission Line, was established in 1958, and passes through the APE. The segment documented and evaluated by Autry (2004b) lies just

southeast of the APE. Autry found that the resource did not meet the eligibility criteria for listing in either the NRHP or the CRHR. The pedestrian survey for the present-day project identified the transmission line continuing through and beyond the APE from southeast to northwest. The transmission line construction and materials are consistent with the segment recorded by Autry (2004b), and Jacobs concluded that the segment within the APE does not meet the eligibility criteria for listing in either the NRHP or the CRHR (Jacobs 2020).

Isolated Archaeological Artifacts.

Iso-1 is a small interior flake of red chert that was identified on the surface of a plowed field in the southern half of the western property. No other artifacts, cultural soils, or features were associated with the artifact.

Iso-2 is a small orange chert scraper found among the imported gravel on a farm road on the western border of the western property. No other artifacts, cultural soils, or features were associated with the artifact.

Neither isolate is considered eligible for either the CRHR or the NRHP (Jacobs 2020).

8.3.3 Impacts

This section describes the cultural resource impacts associated with the two plan concepts, mitigation measures for identified significant impacts, and the level of impact significance following implementation of the identified mitigation measures.

IMPACT 8-1	**Disturbance of Historic Resources**. The APE does not contain any historic resources that would be considered significant for the purposes of CEQA. Project implementation would have **no impact** to historic resources.

Plan Concept 1

The records search and pedestrian survey revealed two historical resources in the APE: a segment of Fiddyment Road (P-31-001422) and a segment of the PG&E Rio Oso-Hurley/Rio Oso-Tesla Transmission Line (P-31-005857). These sites do not appear to meet the criteria for the NRHP or the CRHR and are therefore not considered to be significant for the purposes of CEQA. In addition, the pedestrian survey did not reveal any additional historical sites. Therefore, the APE does not contain any historical resources that would be considered significant for the purposes of CEQA. Plan Concept 1 would have no impact to historical resources.

Plan Concept 2

Impacts associated with implementation of Plan Concept 2 would be the same as identified for Plan Concept 1 because the APE does not contain historical resources considered to be significant for the purposes of CEQA. Plan Concept 2 would have no impact to historical resources.

IMPACT 8-2	**Disturbance of Tribal Cultural Resources Discovered during Construction**. Ground disturbance from project construction activities could disturb, disrupt, or destroy unknown tribal cultural resources. Impacts to previously undiscovered tribal cultural resources as a result of ground-disturbing construction activities would be **significant.**

Plan Concept 1

No known tribal cultural resources are located in the project APE. However, there is a low to moderate potential for encountering isolated Native American artifacts or buried archaeological deposits, associated human remains, and tribal cultural resources during proposed project-related ground disturbance. Goal CR-1 of the Sunset Area Plan (Placer County 2019a) is to identify and protect the significant cultural resources of the Sunset Area. This includes Policy CR-1.5: Sensitive Locations for Cultural Resources, which directs the County to consider areas with existing riparian resources as being sensitive locations for cultural resources. The WPWMA took this policy into consideration when evaluating the impacts of Plan Concept 1.

Riparian areas include streams, rivers, lakes, wetlands, and vernal pools. The APE has existing vernal pools, and therefore, it would be defined as a sensitive location for cultural resources, according to Policy CR-1.5. The presence of Native American artifacts, including the two isolates discovered during the intensive pedestrian survey of the APE and the identification of two surface lithic scatters and seven isolated milling tools found within 1 mile of the APE, also indicates the site is a sensitive area for cultural resources. Although this relative frequency of prehistoric-era artifacts and sites is low within 1 mile of and including the APE, their presence, when considered together with the location of the APE between the Auburn Ravine and Pleasant Grove watersheds, and the presence of the vernal pool complex and associated plant communities within the APE, suggest that Native Americans traveled through the area and may have left behind traces of past use of seasonally available resources that now lie buried beneath the ground surface. Based on this potential for prior Native American activity within the project area, ground-disturbing activities associated with the solid waste project elements and complementary and programmatic elements could result in the disturbance, disruption, or destruction of tribal cultural resources as defined in PRC section 21074. This impact would be considered significant.

Plan Concept 2

Impacts associated with implementing Plan Concept 2 would be the same as identified for Plan Concept 1 because of the potential for undiscovered tribal cultural resources to be disturbed, disrupted, or destroyed during project-related, ground-disturbing activities. This impact would be considered **significant**.

Mitigation Measure 8-2: Disturbance of Tribal Cultural Resources Discovered during Construction.

If any suspected tribal cultural resources are discovered during ground-disturbing construction activities, work will cease within 100 feet of the find, or an agreed upon distance based on the project area and nature of the find. A Tribal Representative from UAIC will be immediately notified and will determine whether the find is a tribal cultural resource (PRC §21074). The Tribal Representative will make recommendations for further evaluation and treatment as necessary. Preservation in place is the preferred alternative under CEQA and UAIC protocols, and every effort must be made to preserve the resources in place, including through project redesign. Culturally appropriate treatment may include processing materials for reburial, minimizing handling of cultural objects, leaving objects in place within the landscape, or returning objects to a location within the project area where they will not be subject to future impacts. UAIC does not consider curation of tribal cultural resources to be appropriate or respectful and requests that materials not be permanently curated unless approved by the tribe.

The WPWMA's contractors will implement any measures deemed by the WPWMA to be necessary and feasible to preserve in place, avoid, or minimize impacts to the resource, including facilitating the appropriate tribal treatment of the find, as necessary. Treatment that preserves or restores the cultural character and integrity of a tribal cultural resource may include tribal monitoring, culturally appropriate recovery of cultural objects, and reburial of cultural objects or cultural soil. Work at the discovery location

cannot resume until the necessary investigation and evaluation of the discovery pursuant to CEQA and AB 52 has been satisfied.

Level of Significance after Mitigation.

Implementation of Mitigation Measure 8-2 establishes the required procedures to be followed if tribal cultural resources are discovered during construction activities, including immediately stopping work within 100 feet of the discovery and coordinating with a Tribal Representative from a California Native American tribe that is traditionally and culturally affiliated with the geographic area. Because this mitigation would result in the avoidance of tribal cultural resources if they are discovered, or other appropriate measures (for example, reburial of cultural objects) would be implemented if avoidance is not possible, the impact would be reduced to **less than significant** after mitigation.

IMPACT 8-3	**Disturbance of Archaeological Resources Discovered during Construction.** Ground disturbance from project construction activities could disturb, disrupt, or destroy unknown buried archaeological resources. Impacts to previously undiscovered archaeological resources as a result of ground-disturbing construction activities would be **significant.**

Plan Concept 1

Archival research indicated that there are no archaeological sites or ethnographic village sites in the project APE. However, as indicated for Impact 8-2, there is a low to moderate potential for encountering isolated Native American artifacts or buried archaeological deposits, associated human remains, and tribal cultural resources during proposed project-related ground disturbance. Based on this potential for prior Native American activity within the project area, ground-disturbing activities associated with the solid waste project elements and complementary and programmatic elements could result in the disturbance, disruption, or destruction of previously undiscovered archaeological resources as defined in State CEQA Guidelines 15064.5. This impact would be considered significant.

Plan Concept 2

Impacts associated with implementing Plan Concept 2 would be the same as identified for Plan Concept 1 because of the potential for undiscovered archaeological resources to be disturbed, disrupted, or destroyed during project-related, ground-disturbing activities. This impact would be considered significant.

Mitigation Measure 8-3: Disturbance of Archaeological Resources Discovered during Construction.

If any prehistoric-era or historic-era archaeological resources are discovered during ground-disturbing activities, work within 100 feet of the resources will be halted, and a qualified archaeologist will be consulted to assess the significance of the find according to CEQA Guidelines Section 15064.5. If any find is determined to be significant, representatives from the WPWMA and the archaeologist would determine the appropriate avoidance measures or other appropriate mitigation. If the archaeologist determines that the find is potentially a tribal cultural resource (for example, a prehistoric-era archaeological site), the archaeologist will notify representatives from the WPWMA, and the procedures described in Mitigation Measure 8-2 will be followed. All significant cultural materials recovered will be, as necessary and at the discretion of the consulting archaeologist, subject to scientific analysis, curation (unless it is a tribal cultural resource), and documentation according to current professional standards. In considering any

suggested mitigation proposed by the consulting archaeologist to mitigate impacts to archaeological resources, the WPWMA will determine whether avoidance is necessary and feasible in light of factors such as the nature of the find, proposed project design, costs, and other considerations. If avoidance is infeasible, other appropriate measures (for example, data recovery) will be instituted. Work may proceed on other parts of the project site while mitigation for historical or unique archaeological resources is being carried out.

Level of Significance after Mitigation

Implementation of Mitigation Measure 8-3 establishes the required procedures to be followed if archaeological resources are discovered during construction activities, including immediately stopping work within 100 feet of the discovery and retaining a qualified archaeologist to evaluate the find and recommend appropriate treatment. Because this mitigation would result in the avoidance of archaeological resources if they are discovered, or other appropriate measures (such as data recovery) if avoidance is not possible, the impact would be reduced to **less than significant** after mitigation.

IMPACT 8-4	**Disturbance of Human Remains**. Construction and excavation activities associated with project implementation could unearth previously undiscovered human remains. Impacts related to the disturbance of human remains would be **significant**.

Plan Concept 1

Based on documentary research, no evidence suggests that any marked or unmarked human interments or human remains are present within the APE. However, ground-disturbing construction activities associated with the solid waste project elements and complementary and programmatic elements of Plan Concept 1 could uncover previously unknown human remains. Grave sites and Native American remains can be located outside of dedicated cemeteries or burial sites.

California law recognizes the need to protect Native American human burials, skeletal remains, and items associated with Native American burials from vandalism and inadvertent destruction. The procedures for the treatment of Native American human remains are contained in the California *Health and Safety Code* Sections 7050.5 and 7052, PRC Section 5097, and the *California Code of Regulations* Section 15064.50 (CEQA). The disturbance of previously unknown human remains would be considered a significant impact.

Plan Concept 2

Impacts associated with implementing Plan Concept 2 would be the same as identified for Plan Concept 1. The disturbance of previously unknown human remains would be considered a significant impact.

Mitigation Measure 8-4: Disturbance of Human Remains.

As required by the provisions of California's *Health and Safety Code* Section 7050.5, PRC Section 5097.98, and the *California Code of Regulations* Section 15064.5 (CEQA), if human remains are encountered at the site, work in the immediate vicinity of the discovery will cease, and necessary steps to secure the integrity of the immediate area will be taken. The Placer County Coroner will be notified immediately. The coroner will then determine whether the remains are Native American. If the coroner determines the remains are Native American, the coroner will notify the NAHC within 24 hours, who will, in turn, notify the person the NAHC identifies as the MLD of any human remains. Further actions will be determined, in part, by the desires of the MLD. The MLD has 48 hours to make recommendations regarding the disposition of the remains following notification from the NAHC of the discovery. If the MLD does not make

recommendations within 48 hours, the WPWMA will, with appropriate dignity, reinter the remains in an area of the property secure from further disturbance. Alternatively, if the WPWMA does not accept the MLD's recommendations, the WPWMA or the MLD may request mediation by the NAHC.

Level of Significance after Mitigation.

Implementation of Mitigation Measure 8-4 establishes the required procedures to be followed if human remains are discovered during construction activities. Because this mitigation requires notifying the NAHC if human remains are discovered and coordinating with the MLD, if applicable, for proper disposition of the remains, the impact would be reduced to **less than significant** after mitigation.

8.4 References

Autry, Erin. 2004a. State of California Department of Parks and Recreation 523 form updates for P-31-001422, Fiddyment Road.

Autry, Erin. 2004b. State of California Department of Parks and Recreation 523 form for P-31-005857.

Derr, Eleanor and Richard Derr. 1996. State of California Department of Parks and Recreation Primary Record for P-31-001422, Fiddyment Road.

Dillon, Brian D. 2002. "California Palaeoindians: Lack of Evidence, or Evidence of a Lack?" In *Essays in California Archaeology: A Memorial to Franklin Fenenga*. University of California Archaeological Research Facility, No. 60. Berkeley. pp. 110–128.

Fredrickson, David A. 1973. Early Cultures of the North Coast Ranges, California. Unpublished Ph.D. dissertation, Department of Anthropology, University of California, Davis.

Fredrickson, David A. 1974. "Cultural Diversity in Early California: A View from the North Coast Ranges." *Journal of California Anthropology* Vol. 1 No. 1. pp. 41–53.

Golla, Victor. 2007. "Linguistic Prehistory." *California Prehistory: Colonization, Culture, and Complexity*. Alta Mira Press, Lanham, Maryland. pp. 71–82.

Heizer, Robert F. 1949. "The Archaeology of Central California, I: The Early Horizon." *University of California Anthropological Records.* Berkeley. Vol. 12 No. 1. pp. 1–83.

Hoover, Mildred B., Hero E. Rensch, Ethel G. Rensch, and William N. Abeloe. 2002. *Historic Spots in California*. 5th ed., revised by Douglas E. Kyle. Stanford University Press, Stanford, California.

Jacobs Engineering Group, Inc. (Jacobs). 2020. *Western Placer Waste Management Authority – Renewable Placer: Waste Action Plan, Placer County, California, Cultural Resources Technical Report*. Prepared for the Western Placer Waste Management Authority, Roseville, California.

Kroeber, Alfred J. 1925. *Handbook of the Indians of California*. Bureau of American Ethnology, Smithsonian Institution Bulletin 78. Government Printing Office, Washington, D.C. Reprinted 1976 by Dover Publications, Inc., New York.

Kroeber, Alfred J. 1929. "The Valley Nisenan." *University of California Publications in American Archaeology and Ethnology.* Vol. 24. pp. 253–290.

Kyle, Douglas E. 1990. *Historic Spots in California*. Revised and updated original texts by Mildred Brooke Hoover, Hero Eugene Rensch, Ethel Grace Rensch, and William N. Abeloe first published in 1932. Stanford University Press, Stanford, California.

LaJeunesse, Roger M. and John M. Pryor. 1996. *Skyrocket Appendices*. Report on file, Department of Anthropology, California State University, Fresno.

Lardner, W. B. and M. J. Brock. 1924. *History of Placer and Nevada Counties, California*. Historic Record Company, Los Angeles, CA. pp. 228–237.

Lightfoot, Kent G., and Otis Parrish. 2009. *California Indians and Their Environment: An Introduction*. Berkeley, CA: University of California Press.

Mead, George R. 2014. *The Ethnobotany of the California Indians*. Second Edition. E-Cat Worlds Press.

Meyer, Jack and Jeffrey S. Rosenthal. 1998. *An Archaeological Investigation of Artifacts and Human Remains from CA-CCO-637, Los Vaqueros Project Alignment, Contra Costa County, California*. Anthropological Studies Center, Sonoma State University Academic Foundation, Rohnert Park, California.

Meyer, Jack and Jeffrey S. Rosenthal. 2008. *A Geoarchaeological Overview and Assessment of Caltrans District 3: Cultural Resources Inventory of Caltrans District 3 Rural Conventional Highways*. Far Western Anthropological Research Group, Davis, California, for California Department of Transportation, District 3, Marysville, CA.

Moratto, Michael J. 1984. *California Archaeology*. Academic Press, Orlando, Florida.

Nationwide Environmental Title Research, LLC. 2019. Historic Aerials. http://www.historicaerials.com/.

Oliver, Ansel. 2006. "A chip off the history block." *The Press-Tribune*. Gold County Media. November 1. https://goldcountrymedia.com/news/60220/a-chip-off-the-history-block/.

Online Archive of California. 2009. *Inventory of the Pacific Fruit Express Company Collection, 1906-1989*. California Digital Library. The Regents of the University of California.

Pappas, Stephen and Megan Webb. 2015. State of California Department of Parks and Recreation 523 form updates for P-31-001422, Fiddyment Road.

Placer County. 2013. *Placer County General Plan*. Accessed February 20, 2020. https://www.placer.ca.gov/2977/Placer-County-General-Plan.

Placer County. 2019a. *Sunset Area Plan*. December. https://www.placer.ca.gov/DocumentCenter/View/47887/Sunset_Area_Plan_Dec2020?bidId=.

Placer County. 2019b. *Final Environmental Impact Report for the Sunset Area Plan/Placer Ranch Specific Plan*. Accessed February 28, 2020. https://www.placer.ca.gov/3307/Sunset-Area-Plan-Placer -Ranch-Specific-Plan.

Ragir, Sonia. 1972. "The Early Horizon in Central California Prehistory." *Contributions of the University of California Archaeological Research Facility No. 15*. University of California, Berkeley.

Rosenthal, Jeffrey S. and Jack Meyer. 2004a. "Landscape Evolution and the Archaeological Record: A Geoarchaeological Study of the Southern Santa Clara Valley and Surrounding Region." *Center for Archaeological Research at Davis Publication No. 14*. University of California, Davis.

Rosenthal, Jeffrey S. and Jack Meyer. 2004b. "Cultural Resources Inventory of Caltrans District 10, Rural Conventional Highways." In *Geoarchaeological Study, Vol 3., Landscape Evolution and the Archaeological Record of Central California*. Far Western Anthropological Research Group, Davis, California.

Rosenthal, Jeffrey S., Gregory G. White, and Mark Q. Sutton. 2007. "The Central Valley: A View from the Catbird's Seat." *California Prehistory: Colonization, Culture, and Complexity.* Alta Mira Press, Lanham, Maryland. pp. 147–164.

Starkey, Anna, Cultural Regulatory Specialist, Tribal Historic Preservation Department, United Auburn Indian Community of the Auburn Rancheria. 2020. Personal communication (email) with Stephanie Ulmer, Environmental Resources Specialist, WPWMA. September 21.

Uren, Charles E. 1887. *Official Map of Placer County, California*. County Surveyor, Placer County.

White, Gregory G. 2003. *Testing and Mitigation at Four Sites on Level (3) Long Haul Fiber Optic Alignment, Colusa County, California*. Archaeological Research Program, California State University, Chico. Prepared for Kiewit Pacific, Concord.

Wilson, Norman L., and Arlean H. Towne. 1978. "Nisenan." *Handbook of North American Indians, Vol. 8: California.* Smithsonian Institution. Washington D.C. pp. 387–397.

Wohlgemuth, Eric. 2004. The Course of Plant Food Intensification in Native Central California. Ph.D. dissertation, Department of Anthropology, University of California, Davis.

9. Geology, Soils, and Paleontological Resources

This chapter describes the geology and soils in the proposed project study area and evaluates the potential geology and soils impacts of Plan Concept 1 and Plan Concept 2 of the Renewable Placer: Waste Action Plan. This chapter also describes the paleontology of the proposed project study area and evaluates potential impacts from Plan Concepts 1 and 2 on paleontological resources.

9.1 Environmental Setting

The project site is located on gently rolling terrain at the base of the Sierra Nevada foothills. Pre-Western Regional Sanitary Landfill (WRSL) development elevations ranged from approximately 106 feet above mean sea level (AMSL) in the southwestern corner of the site to about 134 feet AMSL at the center of the site. Currently, the primary topographic feature on the site is the existing WRSL (Figure 9-1). Elevations within the WRSL footprint range from approximately 57 feet AMSL at the lowest point (excavated areas) to approximately 196 feet AMSL on filled areas (Golder 2017). The area surrounding the project site is characterized by open space and agricultural uses (irrigated land and grazing).

9.1.1 Methodology

Geology and Soils

The geology and soils evaluation is based on studies prepared by Golder Associates, Inc. (Golder), plans for the proposed project, other geologic and hydrogeologic investigations for the proposed project, compliance with applicable regulations, and other applicable information. The specific documents relied on to prepare this evaluation include the following:

- Final Environmental Impact Report, Sunset Area Plan/Placer Ranch Specific Plan. Prepared for Placer County (Ascent Environmental [Ascent] 2019).
- Geotechnical Exploration Report, Proposed Expansion of Western Regional Sanitary Landfill (Geotechnical Exploration Report; Golder 2018).
- Joint Technical Document, Western Regional Sanitary Landfill Placer County, California Volume I (Joint Technical Document [JTD]; Golder 2017).
- Countywide General Plan Policy Document, Adopted August 16, 1994; reflects amendments through May 21, 2013 (Placer County 2013).
- Western Placer Waste Management Authority (WPWMA) Waste Discharge Requirements (WDRs) Order No. R5-2007-0047 (WDR Order; CVRWQCB 2007).
- Placer County General Plan Update, Countywide General Plan Final Environmental Impact Report Volume I (Countywide General Plan EIR; Crawford Multari & Starr et al. 1994).

Paleontological Resources

No documented paleontological sites or studies have been conducted at or near the project site. The evaluation of paleontological resources is based primarily on the following documents, which describe the paleontology of the area north of Sacramento, California:

- Final Environmental Impact Report, Sunset Area Plan/Placer Ranch Specific Plan. Prepared for Placer County (Ascent 2019).

- Geology of Sacramento, California, United States of America, Geology of the Cities of the World Series (International Association for Engineering Geology [IAEG] 2018).
- Countywide General Plan Policy Document, adopted August 16, 1994; reflects amendments through May 21, 2013 (Placer County 2013).
- Clover Valley Large and Small Lot Tentative Subdivision Maps Recirculated Draft EIR (RMPI 2006).
- Placer County General Plan Update, Countywide General Plan Final EIR, Volume I (Crawford Multari & Starr et al. 1994).

9.1.2 Geologic Setting

The project site is located in the northeastern part of the Great Central Valley geomorphic province (Golder 2018). The Great Valley, also referred to as the Central Valley, is an alluvial plain about 50 miles wide and 400 miles long in the central part of California. The Great Valley is a trough in which sediments have been deposited since the Jurassic period (approximately 160 million years ago).

Basement rocks in the area consist of plutonic and metamorphic rocks of the Sierra Nevada Batholith and associated metamorphic complexes (Lawrence & Associates 1995; EDAW 2000, as referenced in Golder 2017). These basement rocks are exposed in the foothills approximately 5 miles east of the project site. Overlying the batholith in the valley is an eastward-thinning sequence of marine sedimentary rocks of the Upper Cretaceous age, unconformably overlain by Tertiary-age and Quaternary-age sedimentary deposits. Formations located near the project site include a Miocene-age through Holocene-age sequence of alluvial deposits derived from Tertiary-age volcanic rocks and the Sierra Nevada Batholith (EDAW 2000; Lawrence & Associates 1995; Helley and Harwood 1985, as referenced in Golder 2017). The Tertiary-age and Quaternary-age sedimentary units are exposed near the project site and underlie the project site. As described by Golder (2017), the local geology consists of Quaternary-age (up to 2.6 million years ago) alluvial deposits of terrestrial origin underlain by sandstone, shale, and gravel deposits of primarily Pleistocene- to Pliocene-age (0.01 to 5.3 million years ago), with some deposits as old as Miocene-age (up to 23 million years ago).

Geologic Units

Geologic units in the immediate project site vicinity include the following from youngest to oldest:

- Holocene-age alluvium and basin deposits
- Pleistocene-age Riverbank Formation
- Pleistocene-age Turlock Lake Formation
- Pliocene-age Laguna Formation, and
- Miocene-Pliocene-age Mehrten Formation

These geologic units are relatively flat-lying alluvial sediments. The younger sedimentary units are often similar in lithology, and the subsurface contacts between the units are not well defined (Golder 2017). The distribution of these geologic units near the project site is shown on Figure 9-2. Descriptions of these units are presented from youngest to oldest in the following discussion.

Alluvium and Basin Deposits.

Holocene-age alluvial deposits occupy the present stream and river channels. These deposits are found in Pleasant Grove Creek and Orchard Creek to the south and north of the project site, respectively. The alluvium consists of unweathered gravel, sand, and silt. Holocene-age basin deposits are derived from the same sources as the alluvium but consist of fine-grained silt and clay.

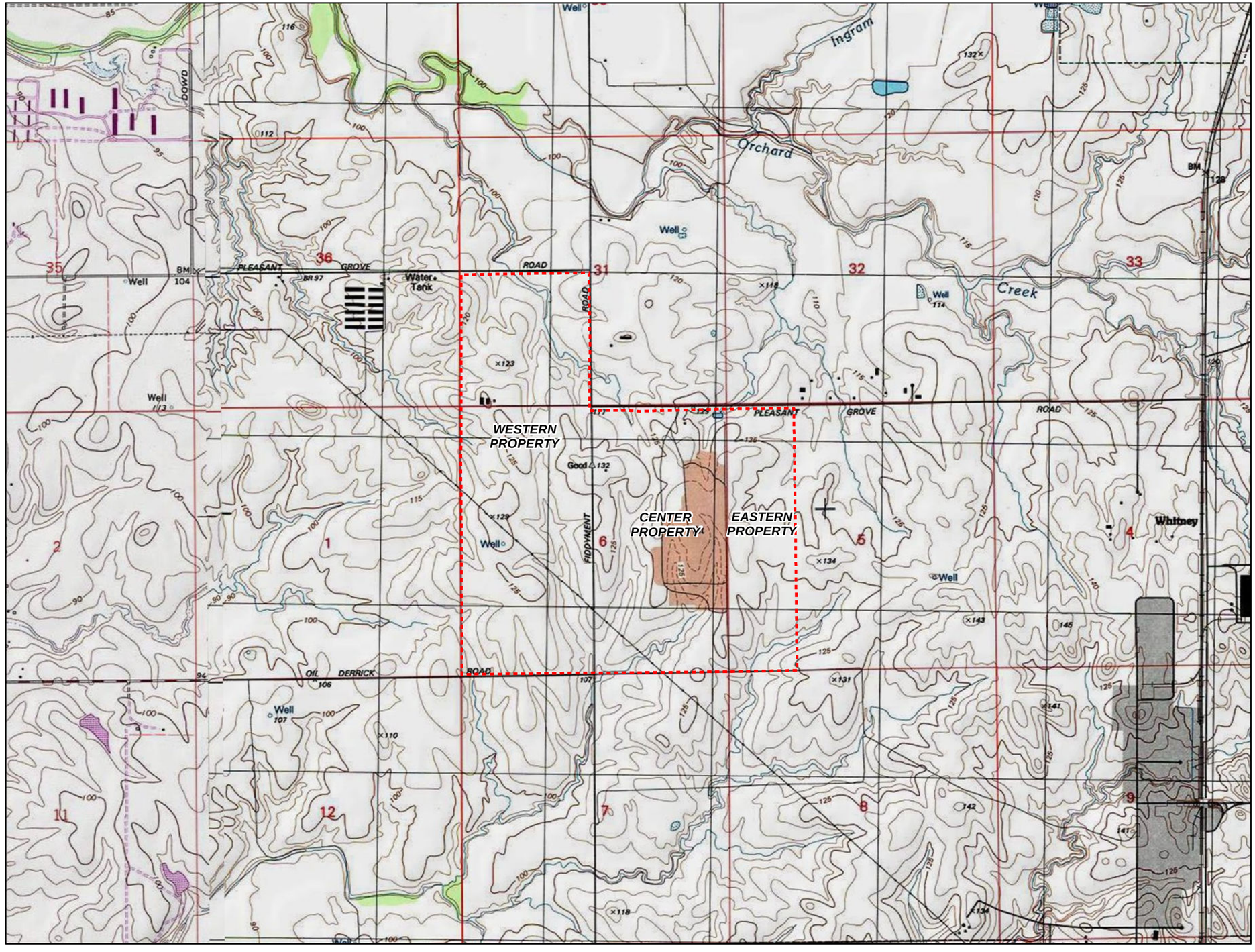

EXISTING SITE TOPOGRAPHY

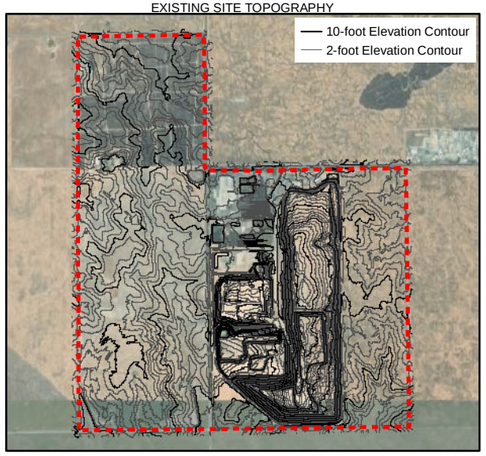

LEGEND

Project Boundary

Source: U.S. Geological Survey, 1:24,000 Topographic Map, Roseville, California, 1992.

N

0 2,000 4,000

Feet

Figure 9-1. Site Vicinity and Regional Topography
Draft Environmental Impact Report
Renewable Placer: Waste Action Plan
Placer County, California

Jacobs

\\dc1vs01\GISProj\W\WPWMA\Maps\Report\EIR\Geology\USGS_201123.mxd 7/21/2021

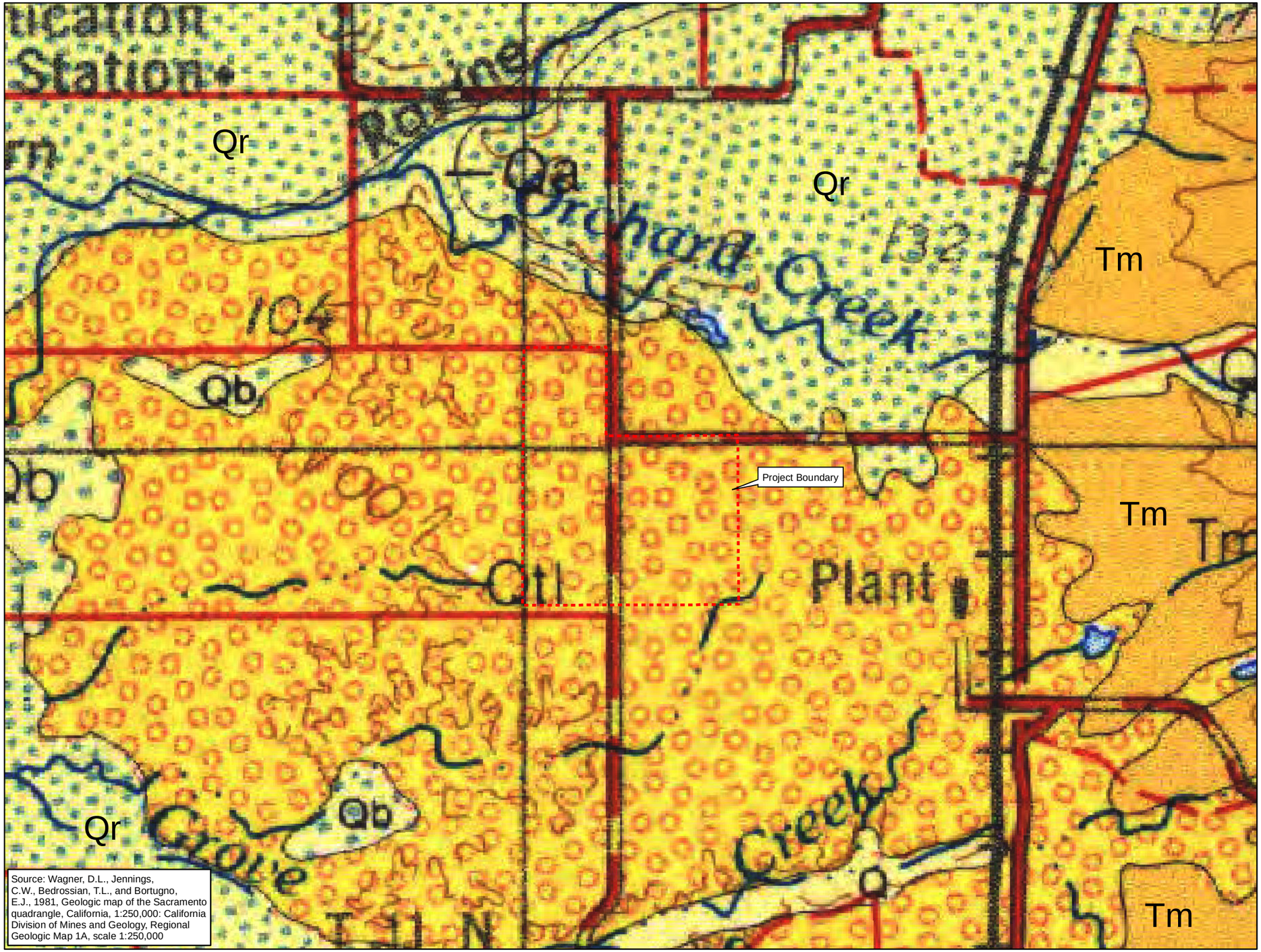

LEGEND

Project Boundary

Geology
Sedimentary and Metasedimentary Rocks
Cenozoic
Quarternary
Q Alluvium
Qa Levee and channel deposits
Qb Basin deposits (Alluvium)
Qr Riverbank Formation (Alluvium)
Qtl Turlock Lake Formation (Sand, silt, and gravel)
Tertiary
Tm Mehrten Formation (Andesitic conglomerate, sandstone, and breccia)

N

0 0.75 1.5
Miles

Figure 9-2. Regional Geologic Map
Draft Environmental Impact Report
Renewable Placer: Waste Action Plan
Placer County, California

Jacobs

Riverbank Formation.

The Riverbank Formation consists of unconsolidated to semi-consolidated gravel, sand, and silt, with minor clay, and is red to dark brown in color. Riverbank Formation outcrops generally are topographically higher than the Holocene-age alluvial deposits. The formation is exposed along the sides of the present Orchard Creek drainage approximately 0.5-mile northeast of the project site.

Turlock Lake Formation.

The project site is situated on sediments mapped as the Turlock Lake Formation (Lawrence & Associates 1995, as referenced in Golder 2017). The Turlock Lake Formation in the southern and eastern parts of the Sacramento Valley consists of stream-laid alluvial deposits of arkosic gravel, sand, silt, and clay. The formation stands topographically higher than the Riverbank and modern alluvial plains and is highly dissected by stream erosion. The Turlock Lake Formation underlies most of the gently rolling hills near WPWMA and represents eroded alluvial fans derived from the Sierra Nevada.

Laguna Formation.

The Pliocene-age Laguna Formation consists of interbedded alluvial gravel, sands, and silts and generally is lithologically indistinguishable from the Turlock Lake Formation. Geologic maps from the early 1960s show much of the Turlock Lake Formation as Laguna Formation (Lawrence & Associates 1995, as referenced in Golder 2017). The distinction between the two formations is primarily based on soil development at the ground surface.

Generally, the coarser gravel and sand intervals in the alluvial deposits represent stream-channel deposits, and the finer silt and clay intervals represent floodplain and levee deposits around the stream channels. During deposition of these types of alluvial sediments, the gravel and sand deposits inter-finger with the fine-grained deposits as the stream channels meander across the alluvial fans.

Mehrten Formation.

Underlying the Pleistocene- and Pliocene-age alluvial deposits are the Pliocene- and Miocene-age volcanic deposits derived from the Sierra Nevada. The Mehrten Formation, exposed in the hills approximately 2 miles east of the project site, is composed of cemented boulder to cobble conglomerate, sandstone, siltstone, and tuff breccia of andesitic material. The tuff breccia is hard and forms ridge tops east of the site. The similar ages of the volcanic and alluvial deposits suggest that there may be some interfingering of the two deposits (Lawrence & Associates 1995, as referenced in Golder 2017).

9.1.3 Faults, Seismicity, and Related Hazards

The tectonic setting of the site region is dominated by the northwestern motion of the Pacific plate with respect to the North American plate (Golder 2017). Most of the movement is accommodated by right-slip displacement along the San Andreas fault system at about 50 millimeters per year (mm/yr). Earthquakes in the San Andreas system tend to be large and relatively frequent; for example, the 1906 moment magnitude (Mw) 7.8 San Francisco earthquake occurred on the San Andreas fault, which is located more than 93 miles southwest of the project site, as shown on Figure 9-3.

Some of the plate motion is taken up in convergence between the two plates. This compression is reflected in the uplifted mountains of the Coast Ranges that border the Central Valley to the west. The eastern margin of the Coast Ranges and western side of the subsiding Central Valley are marked by a zone of active anticlines that are the surface expression of the thrust and reverse fault system that extends from

southwest of Bakersfield to at least Red Bluff (Idriss 2001, as referenced in Golder 2017). The faults in the system have moderate activity with slip rates of 1 to 3 mm/yr. The 1892 Vacaville-Winters earthquake (Mw 6.8) and the 1983 Coalinga (Mw 6.5) earthquakes are associated with fault segments in the zone. The Mysterious Ridge segment is also within this zone.

A relatively small part of the right shear between the Pacific and North American plates is transferred east of the Coast Ranges into the North American plate. Some strain is accommodated as right-slip or normal faulting on short faults within the relatively rigid Sierran block, a tectonic region that encompasses the Sierra Nevada and the Central Valley, including the project site. Typically, small fault segments along the ancient Foothills fault system (a zone of structural weakness within the block) have been reactivated but have very low slip rates of less than 0.1 mm/yr. The Foothills fault system is located approximately 15 miles northeast of the project site and includes the Spenceville fault, Wolf Creek fault, Deadman fault, and Maidu East Lineament of the Bear Mountains fault zone as shown on Figure 9-4. Faults with identified but uncertain time of most recent displacement include a question mark (?) after the age of the displacement on Figure 9-4. The Willows fault zone is approximately 16 miles southwest of the project site (Figure 9-4). The 1975 Oroville earthquake (Mw 5.6) occurred on a fault in the Foothills fault system. The Bear Mountain and Melones faults described in previous studies of the site (EDAW 2000, as referenced in Golder 2017) are within the Foothills fault system.

There are no known active faults within the project site. Idriss (2001, as referenced in Golder 2017) reported that the Spenceville fault and Mysterious Ridge segment (includes the Rumsey Hills and Dunnigan Hills thrust faults) are the closest active faults to the site, 13 miles east and 27 miles west, respectively. The San Andreas fault system, the major seismic source in California, is approximately 93 miles southwest of the site.

Title 27 of the *California Code of Regulations* (CCR), commonly referred to as Title 27, require that the foundation, final slopes, and containment structures of a Class II landfill must be designed to withstand ground motions and resulting movement from a maximum credible earthquake (MCE). Title 40, Part 258 of the *Code of Federal Regulations* (CFR), "Solid Waste Disposal Facility Criteria," commonly referred to as Subtitle D, requires landfills to be designed to withstand a ground acceleration resulting from an earthquake with a 10 percent chance of exceedance of the MCE in a 250-year period.

A seismic hazards assessment was performed for the WRSL, as discussed in Idriss (2001, as referenced in Golder 2017). The assessment estimated the MCE for the regional faults and associated peak horizontal ground acceleration (PHGA). The MCEs determined for the Spenceville fault and Mysterious Ridge segment have Mw of 6.5 and 6.75, respectively. The estimated PHGA that could be expected at the project site from a Mw 6.5 seismic event on the Spenceville fault, about 13 miles east of the project site, is 0.15 times the standard acceleration of Earth's gravity (0.15g), corresponding to strong perceived shaking and light potential damage. A Mw 6.75 seismic event on the Mysterious Ridge segment located almost 27 miles west of the project site, produces a site PHGA in bedrock of 0.10g, also corresponding to strong perceived shaking and light potential damage. A major seismic event on either of these faults is not expected to result in significant ground motion (less than 0.15g, corresponding to strong perceived shaking and light potential damage) based on the site-specific analysis performed in Idriss (2001, as referenced in Golder 2017).

9.1.4 Soils

Native surface soils underlying the project site consist of the following soil types and associated slopes, water erosion potential, and linear extensibility (shrink-swell potential) (U.S. Department of Agriculture 1980, as referenced in Ascent 2019), as shown on Figure 9-5.

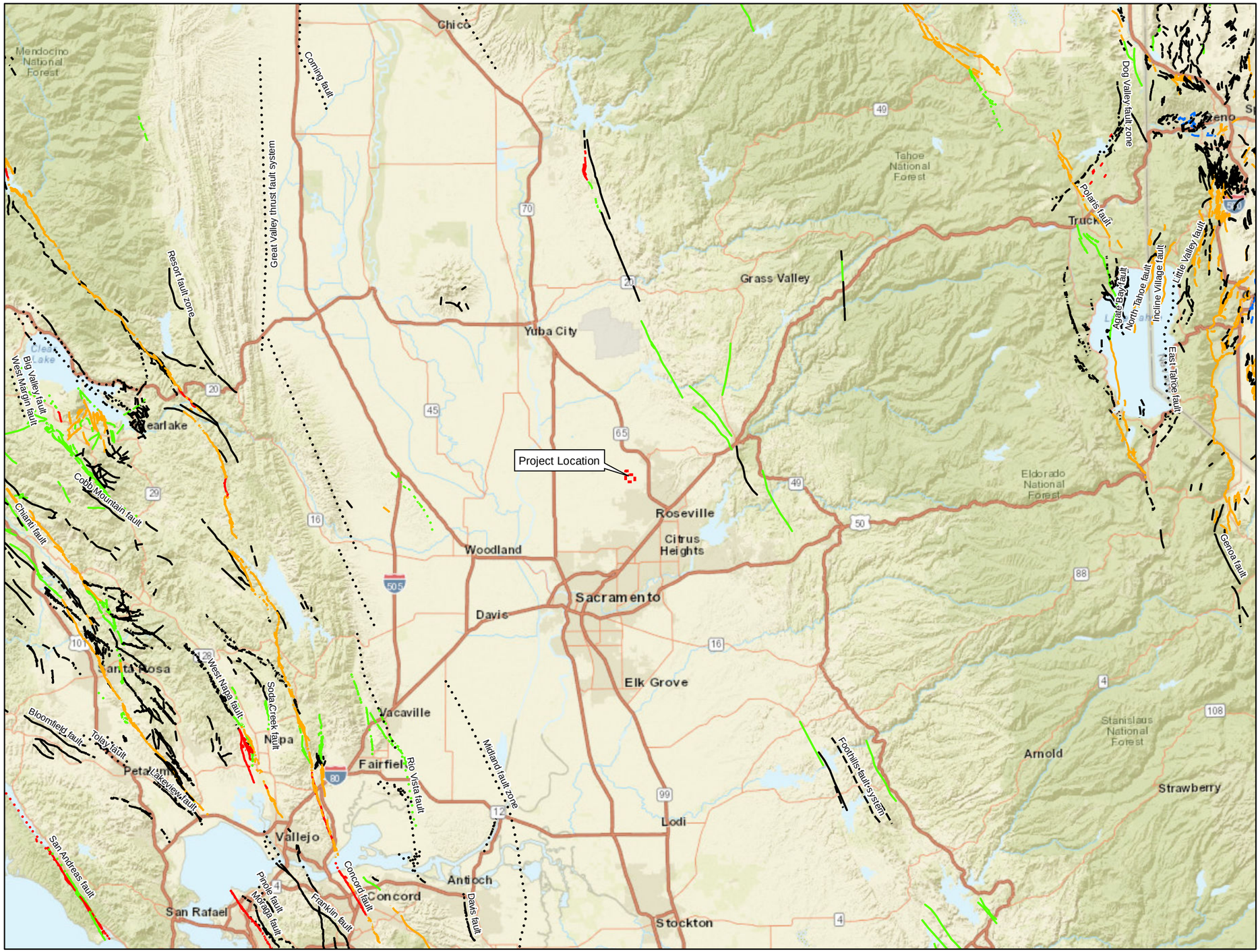

LEGEND

- Project Boundary

Quaternary Faults

Based on time of most recent surface deformation

- Historical (<150 years), well constrained location
- Historical (<150 years), moderately constrained location
- Historical (<150 years), inferred location
- Latest Quaternary (<15,000 years), well constrained location
- Latest Quaternary (<15,000 years), moderately constrained location
- Latest Quaternary (<15,000 years), inferred location
- Late Quaternary (<130,000 years), well constrained location
- Late Quaternary (<130,000 years), moderately constrained location
- Late Quaternary (<130,000 years), inferred location
- Middle and late Quaternary (<750,000 years), well constrained location
- Middle and late quaternary (<750,000 years), moderately constrained location
- Undifferentiated Quaternary(<1.6 million years), well constrained location
- Undifferentiated Quaternary(<1.6 million years), moderately constrained location
- Undifferentiated Quaternary(<1.6 million years), inferred location

Source: U.S. Geological Survey and California Geological Survey, Quaternary fault and fold database for the United States, accessed December 2020.

N

0 15 30

Miles

Figure 9-3. Regional Fault Map
Draft Environmental Impact Report
Renewable Placer: Waste Action Plan
Placer County, California

Jacobs

\\dc1vs01\GISProj\W\WPWMA\Maps\Report\EIR\Geology\Regional_Faults_201112.mxd 7/21/2021

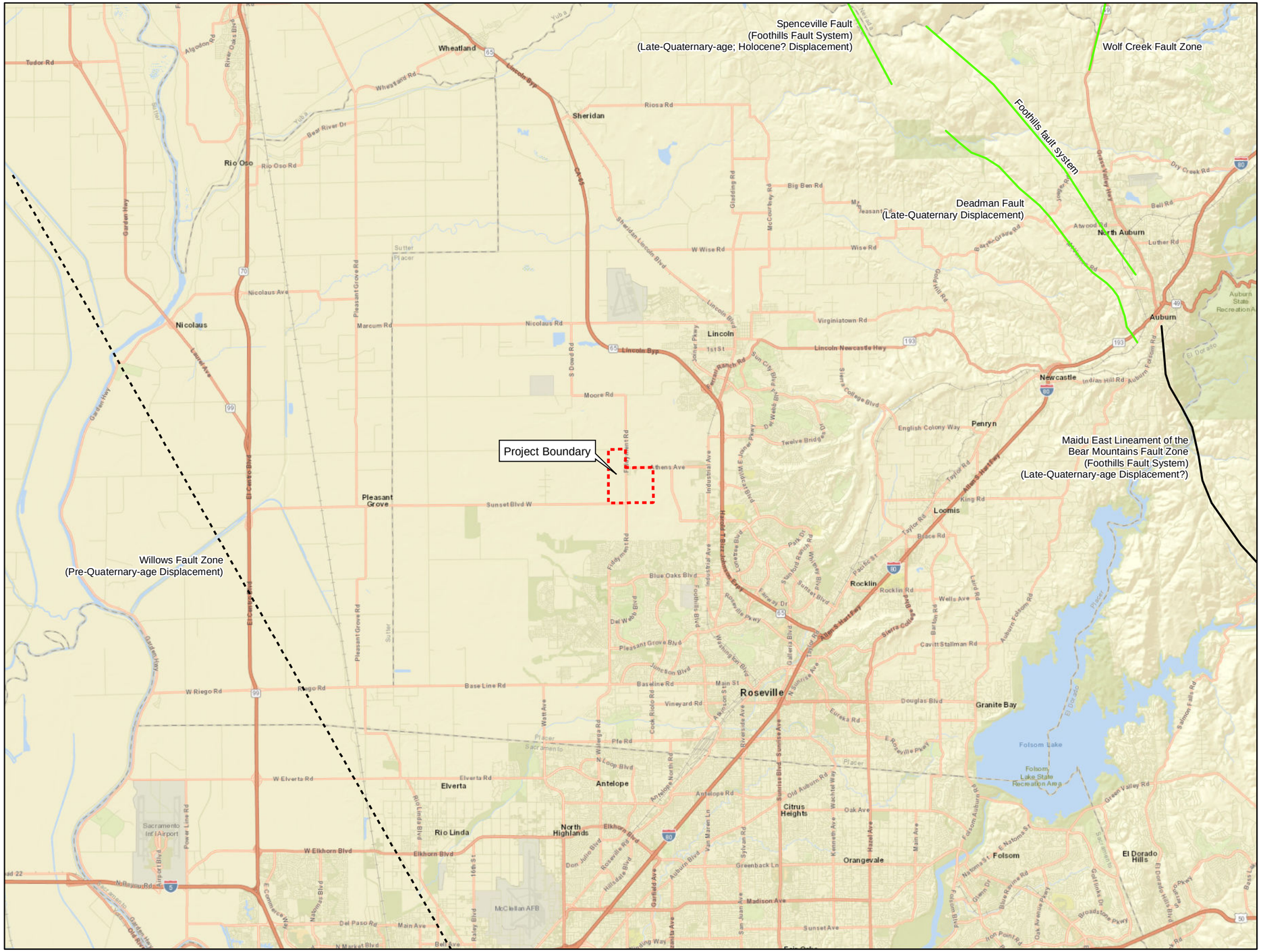

LEGEND

Project Boundary

Quaternary Faults

Based on time of most recent surface deformation

Late Quaternary (<130,000 years), well constrained location

Undifferentiated Quaternary(<1.6 million years), well constrained location

Note:
1. No liquefaction zones delineated for this area.

Sources:
1. U.S. Geological Survey and California Geological Survey, Quaternary fault and fold database for the United States, accessed December 2020.
2. California Geological Survey, 2010. 150th Anniversary Fault Activity Map of California and An Explanatory Text to Accompany the Fault Activity Map of California. https://www.conservation.ca.gov/cgs/publications/fault-activity-map-of-california
3. California Department of Conservation, Seismic Hazard Zone Maps for Liquefaction, 2017. https://maps.conservation.ca.gov/cgs/metadata/SHP_Liquefaction_Zones.html

N

0 3 6

Miles

Figure 9-4. Local Faults and Liquefaction
Draft Environmental Impact Report
Renewable Placer: Waste Action Plan
Placer County, California

Jacobs

\\dc1vs01\GISProj\W\WPWMA\Maps\Report\EIR\Geology\Local_Faults_201112.mxd 7/21/2021

LEGEND

Project Boundary

Soils

- 104: Alamo-Fiddyment complex, 0 to 5 percent slopes
- 141: Cometa-Fiddyment complex, 1 to 5 percent slopes
- 142: Cometa-Ramona sandy loams, 1 to 5 percent slopes
- 146: Fiddyment loam, 1 to 8 percent slopes
- 147: Fiddyment-Kaseberg loams, 2 to 9 percent slopes

Source: Natural Resources Conservation Service, United States Department of Agriculture. Web Soil Survey, accessed December 2020.

N

0 1,000 2,000

Feet

Figure 9-5. Soils
Draft Environmental Impact Report
Renewable Placer: Waste Action Plan
Placer County, California

Jacobs

\\dc1vs01\GISProj\W\WPWMA\Maps\Report\EIR\Geology\Soils_201112.mxd 7/21/2021

- 104 Alamo-Fiddyment Complex, with 0 to 5 percent slopes, moderate water erosion potential, and high linear extensibility. The Alamo-Fiddyment complex supports little construction and is primarily used for farmsteads. Major limitations to construction for the Alamo soil include wetness, slow permeability of subsurface soils, high shrink-swell potential, and the limited ability of the soil to support a load. Fiddyment soil has engineering characteristics similar to those of Alamo soil, with the addition of a shallow depth to hardpan.
- 141 Cometa-Fiddyment complex, with 1 to 5 percent slopes, severe water erosion potential, and low linear extensibility. Cometa soil is composed of a deep, well-drained claypan soil that formed on alluvium, primarily from granitic sources. Surface soils are typically brown sandy loam and are approximately 18 inches thick. The subsoil is brown clay and extends to a depth of about 29 inches, where it grades into a compacted, very pale brown sandy loam. Permeability of the Cometa soil is very slow, and surface runoff is slow. Major construction limitations of the Cometa are the very slow permeability of the subsoil, high shrink-swell potential, and limited ability of the soil to support a load. Fiddyment soil has engineering characteristics similar to those of Cometa soil, with the addition of a moderate depth to hardpan.
- 146 Fiddyment loam, with 1 to 8 percent slopes, severe water erosion potential, and low linear extensibility. This is a moderately deep, well-drained soil found on low terraces overlying siltstone at elevations of 75 to 135 feet. Fiddyment loam is mainly composed of Fiddyment soil and about 15 percent of a combination of Kaseberg loam, Cometa sand, San Joaquin sandy loam, and Alamo clay, which occurs in some drainageways and basins. The major limitations of the unit include slow permeability of the subsoil, the moderate depth to the hardpan, and the limited ability of the soil to support a load.
- 147 Fiddyment-Kaseberg loams, with 2 to 9 percent slopes, moderate water erosion potential, and low linear extensibility. This unit is undulating to gently rolling and overlies terraces with elevations of 75 to 135 feet. The unit is composed of 50 percent Fiddyment soil and 30 percent Kaseberg soil. The remaining percentages include Alamo clay, which can be found in areas with swales and drainageways. The Kaseberg soil is a well-drained soil that is shallow and overlying a hardpan. These soils typically formed in old valley fill overlying siltstone. The surface layer is light brownish gray loam with yellowish brown mottles and is about 8 inches thick. The subsoil consists of light gray silt loam, which, at a depth of approximately 16 inches, overlies a silica-indurated hardpan.

As described by Golder (2017), the surface and subsurface soils at the WRSL have been characterized in several exploration programs by Geomechanics, Inc. (1977), Emcon Associates (1979), Lawrence & Associates (1995 and 1996), Holdrege & Kull Consulting (1997), and Golder (2001).

In general, the surface soils are predominantly fine-grained silts and clays, and the subsurface soils vary over the WRSL, resulting in a wide variety of sand, silt, and clay mixtures typical of the historical gently graded riverbed system. Orange and dark-gray staining indicates wet and dry cycles typical of seasonal high and low water levels. Typically, the first 5 to 10 feet of materials encountered were compacted sandy gravel or silty sand with gravel artificial fill associated with road construction. Below the compacted fill, a hard sandy silt/clay was evident in most borings. This hard fine-grained soil layer was intermixed with poorly graded sand lenses ranging from a thickness of less than 1 inch to about 20 feet. Some borings encountered low-plasticity clay layers that averaged about 5 feet thick. Soils at the site are generally moderately to highly expansive, with areas of low-expansive soils (EDAW 2000, as referenced in Golder 2017). Near-surface soils in the area of the blower and flare station were characterized as slightly to moderately expansive (Lawrence & Associates 1995, as referenced in Golder 2017).

Based on the testing described in Golder (2017), the soil materials at the WRSL are generally hard to dense and provide an excellent foundation for the sanitary landfill.

The Geotechnical Exploration Report (Golder 2018) further details the soil at the eastern property. According to the report, the first 5 feet of material encountered was a sandy clay of low plasticity. In general, the materials encountered after the first 5 feet consisted of sand, silt, and clay mixtures. Most of the soil encountered after 50 feet was fine-grained and consisted of clayey sand and sandy clay. No bedrock was encountered in any of the borings advanced as part of the Geotechnical Exploration Report.

Liquefaction Potential

Mass wasting (for example, landslides) is uncommon to the project area because of the relatively flat topography and gently undulating terrain (Ascent 2019). The U.S. Geological Survey (USGS), which monitors historical and current subsidence, does not identify subsidence in the project area (USGS 2017, as referenced in Ascent 2019).

The potential occurrence of liquefaction during an earthquake event is considered negligible, based on site conditions at the WRSL (Golder 2017). Liquefaction is a condition that occurs when a saturated soil deposit experiences a temporary reduction in shear strength in response to dynamic loading, such as an earthquake. Liquefaction potential is highest in areas subject to strong ground motions, and by sites underlain by shallow groundwater and clean, loose, fine sands. Liquefaction potential decreases with the following factors:

- Increasing fines content
- Increasing depth (confining stress)
- Increasing soil density
- Decreasing ground accelerations

Geotechnical laboratory testing of the clay content and geotechnical data from the project site was performed to determine the critical water contents of the soil, including shrinkage limit, plastic limit, and liquid limit, to establish the moisture contents at which fine-grained clay and silt soils transition between solid, semi-solid, plastic, and liquid states. Based on the results of the geotechnical laboratory testing, the sandy clay and silty sand deposits at the project site are generally classified as non-liquefiable. Geotechnical testing of the sand deposits at the project site also indicated that liquefaction potential is negligible (Golder 2017). As shown on Figure 9-4, no areas indicating liquefaction potential have been delineated at the project site.

9.1.5 Soil Stability

Slope stability was evaluated at the existing WRSL and was discussed in Golder (2017) in relation to the following conditions at the site:

- Soil stockpile stability
- Interim refuse fill stability
- Cut slope stability
- Final cover stability

As described by Golder (2017), unvegetated slopes steeper than 3 percent (ratio of 33 feet horizontal to 1 foot vertical (33H:1V) will have relatively high erosion potential. Temporary soil stockpiles accumulated during current construction and operational activities at the site, which have much higher slopes on the order of 3H:1V or higher, are managed according to the requirements of the approved construction grading plans and applicable Stormwater Pollution Prevention Plan (SWPPP) requirements (Michael Baker International 2015).

As described by Golder (2017), during the WRSL development, interim refuse fill slopes are developed according to a monthly fill plan. These monthly fill plans are completed as interim steps to filling phases of the master filling plan, which is typically one phase per landfill module. Prior to the construction of a base liner, an engineering design report is prepared and submitted to the regulatory agencies for review and approval. The engineering design report presents a maximum final refuse fill plan with supporting slope stability calculations that consider static and dynamic loading conditions.

Golder evaluated the stability of excavated (that is, cut) slopes required to achieve proposed base grades for the WRSL (Golder 2017). An idealized cut slope inclined at 2H:1V into the onsite soils was analyzed, using Spencer's method and the computer program SLIDE. The idealized slope represents a worst-case condition, and, in addition to the cut slope, it was assumed that refuse disposal on top of and adjacent had been completed to an elevation of 265 feet AMSL, based on a limiting elevation of 265 feet AMSL that was the result of a previous analysis of interim fill configurations (Golder 2017). This condition results in the application of additional forces on the cut slope that contribute to the driving forces tending to destabilize the slope. The results of the stability analysis indicated that the modeled slope would be stable under the assumed conditions. Note that seismic stability was not evaluated, because the conditions modeled are temporary and would improve with time. After the cut slope is excavated and the liner system installed, refuse would be placed in the cell up against the slope. The placement of refuse would tend to buttress the cut slope and will increase the factor of safety against instability. Temporary slope conditions are rarely, if ever, analyzed for seismic stability. Excavation slopes around the sides of each future landfill module will be inclined at 2H:1V (Golder 2017).

The stability of the final cover system was evaluated with consideration of both static and dynamic loading conditions and demonstrated that the final grading plan for the existing WRSL exceeds the regulatory requirements of Title 27 and Subtitle D (Golder 2017). The final cover grades for the existing WRSL will consist of side slopes inclined at 3.5H:1V with intermediate benches every 50 vertical feet (Golder 2017).

9.1.6 Paleontological Resources Setting

Paleontology is the study of life in past geologic time, based on fossil plants and animals and includes phylogeny—the relationships to existing plants, animals, and environments—and the chronology of the Earth's history. Paleontological resources include tangible remains of past plant and animal life forms (fossils) left in the geologic record. A paleontological resource is a locality containing vertebrate, invertebrate, or plant fossils (for example, fossil location, fossil-bearing formation, or a formation with the potential to bear fossils). Paleontological resources are considered a fragile and nonrenewable scientific record of the history of life on Earth, and therefore, they represent an important and critical component of the natural heritage of the United States.

Paleontological resources comprise fossils and the geologic context in which they occur. Most fossil remains are the preserved hard parts of plants or animals and include bones and teeth of once-living vertebrate animals, shells or body impressions of invertebrate animals, and impressions or carbonized or mineralized parts of plants (for example, leaf impressions or "petrified wood"). Trace fossils include preserved footprints, trackways, and burrows of prehistoric animals and root marks created by plants. The geologic context in which fossils occur can provide important information regarding the age of the fossils and physical and biological features of the local ancient environment in which the represented plants and animals existed.

As described in Section 9.1.2, geologic units in the immediate project vicinity include Holocene-age alluvium and basin deposits; Riverbank Formation; Turlock Lake Formation; Pliocene-age Laguna Formation; and Miocene-Pliocene-age Mehrten Formation. The sand, silt, and gravel of the Turlock Lake

Formation are found at the surface and beneath the project site and surrounding area, as shown on Figure 9-2. Alluvium characterizing the basin deposits surround the Turlock Lake Formation at the surface to the south, west, and north, and the andesitic conglomerate, sandstone, and breccia of the Mehrten Formation outcrops east of the project site (Figure 9-2).

As described by IAEG (2018), thousands of fossils have been found in the greater Sacramento region within many local formations, from rocks ranging in age from the Paleozoic to the Holocene. The oldest fossils come from the Sierra Nevada foothills in indurated rock that was added to the area by plate tectonic activity. Fossils are also found in the thick sedimentary sequences of the Central Valley and eastern folded edges of the topographic Coast Range to the west.

As described in the Sunset Area Plan FEIR (Ascent 2019), paleontological resources are lithologically dependent; that is, deposition and preservation of paleontological resources are tied to the lithologic unit in which they occur. The potential for paleontological resources to be present is described as the paleontological sensitivity of a geological unit, in accordance with Society of Vertebrate Paleontology guidelines (SVP 2010, as referenced in Ascent 2019). The sensitivity ratings take into account factors such as lithology and proven fossil yield. As described in the Sunset Area Plan FEIR (Ascent 2019), the paleontological sensitivity rating is classified as high for the Turlock Lake Formation, Riverbank Formation, and Mehrten Formation.

Hausback and Hilton (1994, as referenced in IAEG 2018) reported that part of a horse hoof fossil was found in the Turlock Lake Formation from a railroad cut north of Roseville, California. A fossil pine branch with needles was also found near Roseville, in an outcrop suspected to be the Turlock Lake Formation.

Paleontological remains have been found at several localities in alluvial deposits referable to the Riverbank Formation in the Sacramento area, including mammoth remains found during the excavation of a Sacramento Municipal Utility District trench in Elk Grove (IAEG 2018). Curtis (1954, as referenced in IAEG 2018) noted that the clay beds within the Mehrten Formation contain fossil leaves. Moses (1985, as referenced in IAEG 2018) found no fossils in the Mehrten Formation in the Auburn-Folsom area other than a few unidentifiable root casts in the capping breccia (lahars). Over the years during construction in the area of Rocklin and Roseville, several plant fossils have been found in the finer mudrock between the coarse breccia of the lahars of the Mehrten Formation.

As described by Crawford Multari & Starr et al. (1994), fossil remains of prehistoric plant and animal life could be found in the sedimentary rocks and volcanic rock sedimentary materials that are present throughout western Placer County. Sediments associated with the Mehrten Formation in the Roseville area have been found to contain fossils of terrestrial vertebrates. Fossilized animal remains may also be present in caves associated with the limestone geology that can be found in the central part of the Sierra Nevada foothills.

There are no documented studies or observations of paleontological resources at or near the project site.

9.2 Regulatory Setting

9.2.1 Geology and Soils

Federal

Federal Earthquake Hazards Reduction Act.

In 1997, the U.S. Congress passed the Earthquake Hazards Reduction Act to reduce the risks to life and property from future earthquakes by establishing and maintaining an effective earthquake hazards and reduction program. To accomplish this, the act established the National Earthquake Hazards Reduction Program (NEHRP). The agencies responsible for coordinating NEHRP are the Federal Emergency Management Agency (FEMA), the National Institute of Standards and Technology, the National Science Foundation, and USGS. In 1990, NEHRP was amended by the NEHRP Act, which refined the description of the agency responsibilities, program goals, and objectives. The four goals of the NEHRP are as follows:

A. Develop effective practices and policies for earthquake loss reduction and accelerate their implementation.

B. Improve techniques to reduce seismic vulnerability of facilities and systems.

C. Improve identification of seismic hazards and risk-assessment methods and their use.

D. Improve the understanding of earthquakes and their effects.

Title 40, Part 258 of the CFR, Solid Waste Disposal Facility Criteria.

Federal standards regarding municipal solid waste landfills are contained in Title 40, Part 258 of CFR, "Solid Waste Disposal Facility Criteria," commonly referred to as Subtitle D. By enacting Subtitle D, the U.S. Environmental Protection Agency (EPA) intended that states maintain the lead role in implementing and enforcing Subtitle D through approved state permit programs. Title 27 contains the current regulations of the California Department of Resources Recycling and Recovery and the State Water Resources Control Board (SWRCB) pertaining to landfill disposal of municipal solid wastes. California's solid waste permit program was approved by EPA. As a result, California's solid waste regulations were determined to be functionally equivalent to Subtitle D. Accordingly, throughout this section, references to pertinent regulations will be to Title 27 regulations.

State.

The Title 27 regulatory scheme governing landfill disposal of municipal solid wastes is a blend of prescriptive and performance standards covering every aspect of the design, construction, and operation of landfill disposal facilities. These standards include siting criteria, seismic design standards, and containment system design and construction strategies to prevent impacts on surface water and groundwater resources. The following subchapters from Chapter 3 of Title 27 (Criteria for all Waste Management Units, Facilities, and Disposal Sites) are relevant to geology and hydrogeology:

- Subchapter 2 – Siting and Design
- Subchapter 3 – Water Monitoring

Additional requirements for these siting and design criteria are provided in the following subchapters of Title 27 for the operational, closure, and post-closure periods:

- Subchapter 4 – Criteria for Landfills and Disposal Sites
- Subchapter 5 – Closure and Post-Closure Maintenance

Section 20240, Classification and Siting Criteria: Waste management units and engineered structures will meet the following criteria:

- **5-Foot Separation.** All new landfills, waste piles, and surface impoundments will be sited, designed, constructed, and operated such that wastes will be a minimum of 5 feet above the highest anticipated elevation of underlying groundwater. Existing landfills, waste piles, and surface impoundments will be operated such that wastes will be a minimum of 5 feet above the highest anticipated elevation of underlying groundwater (Subsection [c]).
- **Unit Foundation.** All engineered structures (including containment structures) constituting any portion of a unit will have a foundation or base capable of providing support for the structures, and capable of withstanding hydraulic pressure gradients to prevent failure caused by settlement, compression, or uplift and all effects of ground motions resulting from at least the maximum probable earthquake for Class III Units, as certified by a registered civil engineer or certified engineering geologist (Subsection [d]).

- **Section 20250, Class II: Waste Management Units for Designated Waste:** Waste management units and engineered structures shall meet the following criteria [in addition to the more restrictive Class III requirements under Section 20260]:

- **General.** Class II waste management units (Class II Units) shall be located where site characteristics and containment structures isolate waste from waters of the state.
- **Geologic Setting.** As described in Subsection (b) of Section 20250:

  1) New and existing Class II landfills or waste piles shall be immediately underlain by natural geologic materials which have a hydraulic conductivity of not more than $1x10^{-6}$ cm/sec (i.e., 1 foot/year) and which are of sufficient thickness to prevent vertical movement of fluid, including waste and leachate, from Units to waters of the state for as long as wastes in such units pose a threat to water quality. Class II units shall not be located where areas of primary (porous) or secondary (rock opening) hydraulic conductivity greater than $1x10^{-6}$ cm/sec (i.e., 1 foot/year) could impair the competence of natural geologic materials to act as a barrier to vertical fluid movement.

  2) Natural or artificial barriers shall be used to prevent lateral movement of fluid, including waste and leachate.

  3) A liner system with a hydraulic conductivity of not more than $1x10^{-6}$ cm/sec (i.e., 1 foot/year) shall be used for landfills and waste piles when natural geologic materials do not satisfy the requirements in (b)(1).

  4) Flooding – New and existing Class II Units shall be designed, constructed, operated, and maintained to prevent inundation or washout due to floods with a 100-year return period. MSW landfills are also subject to any more-stringent flood plain and wetland siting requirements referenced in SWRCB Resolution No. 93-62 (i.e., see s258.11 and s258.12 of 40CFR258).

5) Ground Rupture – New Class II Units and expansions of existing Class II units, shall have a 200-foot setback from any known Holocene fault. Other units (that are subject to this section) can be located within 200 feet of a known Holocene fault, provided the RWQCB finds that the Unit's containment structures are capable of withstanding ground accelerations associated with the maximum credible earthquake.

6) Rapid Geologic Change – New and existing Class II Units can be located within areas of potential rapid geologic change only if the RWQCB finds that the Unit's containment structures are designed, constructed, and maintained to preclude containment failure. MSW landfills are also subject to any more-stringent unstable area siting requirements referenced in SWRCB Resolution No. 93-62 (i.e., see s258.15 and s258.16 of 40 CFR 258).

Section 20260, Class III: Landfills for Nonhazardous Solid Waste: Waste management units and engineered structures shall meet the following criteria:

- **General.** Class III landfills shall be located where site characteristics provide adequate separation between solid waste and waters of the state (Subsection [a]).
- **Geologic Setting.** Municipal solid waste landfills shall be sited where soil characteristics, distance from waste to groundwater, and other factors will ensure no impairment of beneficial use of surface water or of groundwater beneath or adjacent to the landfill (Subsection [b]). Factors that shall be evaluated include: (A) size of the landfill; (B) hydraulic conductivity and transmissivity of underlying soils; (C) depth to groundwater and variations in depth to groundwater; (D) background quality of groundwater; (E) current and anticipated use of the groundwater; and (F) annual precipitation. Where consideration of these factors indicates that site characteristics alone do not ensure protection of the quality of groundwater or surface water, Class III landfills shall be required to have a single clay liner with hydraulic conductivity of $1x10^{-6}$ centimeters per second (cm/sec) or less. (The liner requirement in Section 20260 was superseded by SWRCB Resolution No. 93-62, incorporating Subtitle D requirements, which requires a composite liner that comprises a 2-foot-thick compacted soil layer having a maximum permeability of 1×10^{-7} cm/sec overlain by a geomembrane having a minimum thickness of 40 mils.)
- **Flooding.** New Class III landfills shall be designed, constructed, operated, and maintained to prevent inundation or washout due to floods with a 100-year return period (Subsection [c]).
- **Ground Rupture.** New Class III landfills shall not be located on a known Holocene fault (Subsection [d]). A Holocene fault is defined as a fault which is or has been active during the last 11,000 years.
- **Rapid Geologic Change.** New Class III landfills can be located within areas of potential rapid geologic change only if the RWQCB finds that the Unit's containment structures are designed, constructed, and maintained to preclude failure (Subsection [e]).

Section 20330, SWRCB – Liners: Liners shall be designed and constructed to contain the fluid, including landfill gas, waste, and leachate, as required in the above siting criteria.

Section 20340, SWRCB – Leachate Collection and Removal Systems (LCRS): LCRSs are required for Class III landfills which have a liner or which accept sewage or water treatment sludge. The LCRS shall be installed directly above underlying containment features or landfill and waste piles and installed between the liners for surface impoundments.

Section 20360, Subsurface Barriers: Subsurface barriers are cutoff walls that are used in conjunction with natural geologic materials to ensure that the lateral hydraulic conductivity standards are satisfied where there is potential for lateral movement of fluid. Cutoff walls shall be installed at Class III landfills as required by RWQCB.

Section 20365, Precipitation and Drainage Controls: Units and their respective containment structures shall be designed and constructed to limit, to the greatest extent possible, ponding, infiltration, inundation, erosion, slope failure, washout, and overtopping.

Section 20370, Seismic Design: Class III Units shall be designed to withstand the maximum probable earthquake (MPE) without damage to the foundation or to the structures which control leachate, surface drainage, erosion, or gas. As required in Section 21750(f)(5), a stability analysis, including a determination of the expected peak ground acceleration of the Unit associated with the MPE for Class III landfills shall be included as part of the report of waste discharge (ROWD) (or Joint Technical Document [JTD]) for the proposed Unit. Section 21750(f)(5) also requires an updated stability analysis be included as part of the final closure and post-closure maintenance plan if the original analysis no longer reflects the conditions at the Unit.

Alquist-Priolo Earthquake Fault Zoning Act (*California Public Resources Code*, Division 2, Chapter 7.5) of 1971, as amended in 1993

The purpose of the Alquist-Priolo Earthquake Fault Zoning Act is to address the hazard of surface fault rupture through the regulation of development in areas of Holocene-active faults; that is, a fault that has had surface displacement within Holocene time (the last 11,700 years) (CGS 2018). The stated intent of the act is to "provide policies and criteria to assist cities, counties, and state agencies in the exercise of their responsibility to prohibit the location of developments and structures for human occupancy across the trace of active faults" (CGS 2018). The State Geologist continually reviews new geologic and seismic data and revises earthquake fault zones or delineates additional earthquake fault zones when warranted by new information. The project site is not located within an Alquist-Priolo earthquake fault zone (CGS 2018).

California Building Standards Code (California Code of Regulations, Title 24) of 2013, as amended in 2017

The *California Building Standards Code*, Section 1808.2, Design for Capacity and Settlement, requires that foundations be designed so that the allowable bearing capacity of the soil is not exceeded, and that differential settlement is minimized. Foundations placed on or within the active zone of expansive soils shall be designed to resist differential volume changes and to prevent damage to the supported structure.

Seismic Hazards Mapping Act

The Seismic Hazards Mapping Act was enacted in 1997 to protect the public from the effects of strong ground shaking, liquefaction, landslides, or other ground failure, and from other hazards caused by earthquakes. This act requires the State Geologist to map areas subject to seismic hazards. In cases where site-specific seismic hazard risks are present, a geotechnical investigation of the site must be conducted, and appropriate mitigation measures must be incorporated into the project design before development permits would be granted. Additionally, the act requires that a Standardized Natural Hazards Disclosure Statement form be completed by real estate sellers if a property is within one of the designated natural hazards areas.

Local

The WPWMA is a Joint Powers Authority (JPA) composed of Placer County and the cities of Lincoln, Rocklin, and Roseville to own and operate a regional recycling facility and sanitary landfill. As a JPA, the WPWMA considers local regulations and consults with local agencies, but the County and city regulations are not applicable, because the County and cities do not have jurisdiction over the proposed project. Accordingly, the following discussion of local goals and policies associated with geological and soil resources is provided for informational purposes only.

The Placer County General Plan Update Countywide General Plan Final EIR states that the western and central parts of the County generally have low seismicity (Placer County 1994). The Placer County General Plan (Placer County 2013) includes the following relevant goal and policies regarding seismic and geological issues as they relate to public health and safety and natural resources:

- GOAL 8.A: To minimize the loss of life, injury, and property damage due to seismic and geological hazards.
  - Policy 8.A.1: The County shall require the preparation of a soils engineering and geologic-seismic analysis prior to permitting development in areas prone to geological or seismic hazards (i.e., ground shaking, landslides, liquefaction, critically expansive soils, avalanche).

The *Placer County Code of Ordinances*, *Placer County Code Article 15.48*, contains the Grading, Erosion and Sediment Control Ordinance, enacted for the purpose of regulating grading on property within the unincorporated area of Placer County to safeguard life, limb, health, property, and public welfare; to avoid pollution to watercourses with hazardous materials, nutrients, sediment, or other earthen materials generated on or caused by surface runoff on or across the permit area; and to confirm that the intended use of a graded site is consistent with the Placer County General Plan (2013), any specific plans, and applicable Placer County ordinances. The most common activities requiring a grading permit include filling or excavating more than 250 cubic yards; disturbing 10,000 square feet of vegetation on slopes of 10 percent or greater; building retaining walls that are more than 4 feet in height, as measured from the bottom of the footing to the top of the retained soil or supporting a surcharge; grading or conducting other construction activity with ground disturbance of 1 acre or more; grading in or adjacent to a drainage course or wetland; or grading in a floodplain.

Section 15.48.360 of the *Placer County Code* specifies when geotechnical investigations are required. A soil or geologic investigation report shall accompany the application in any of the following circumstances when required by the agency director:

- When the proposed grading includes a cut or fill exceeding 10 feet in depth at any point; however, for vehicular ways, a soil investigation shall not be required unless the grading includes a proposed cut or fill that exceeds 10 feet in depth and the slope of the natural ground exceeds 30 percent.
- When highly expansive soils are present.
- In areas of known or suspected geological hazards, including landslide hazards and hazards of ground failure stemming from seismically induced ground shaking.

The Placer County Land Development Manual establishes minimum standards for the design and construction of development improvements. These requirements apply to the design and construction of development improvements to be dedicated to the public or accepted by the County for operation and maintenance, as well as improvements constructed in accordance with an agreement entered into between the County and a developer.

The Engineering and Surveying Division of the Placer County Community Development Resource Agency maintains policies and guidelines regarding grading, erosion control, stormwater design, inspection, and permitting. County-issued permits and plans related to earthwork and utilities that may be required within the project area include the following:

- Grading permits
- Storm water quality plans
- Utility encroachment permits
- Improvement plans

The Environmental Health Services Division of the Placer County Department of Health and Human Services administers well installation, drilling and destruction permitting within Placer County.

9.2.2 Paleontological Resources

Federal

Given that California's solid waste permit program was approved by EPA, and California's Title 27 solid waste regulations were determined to be functionally equivalent to Subtitle D, only California Environmental Quality Act (CEQA) requirements for paleontological resources are applicable to the project site.

State

CEQA requires that project proponents assess potential impacts to paleontological resources, including whether the project would directly or indirectly destroy a unique paleontological resource (Association of Environmental Professionals 2020). *California Public Resources Code* (PRC) Chapter 1.7 Section 5097.5, Archaeological, Paleontological, and Historical Sites, defines any unauthorized disturbance or removal of a fossil locality or remains on public land as a misdemeanor. PRC Section 30244 requires reasonable mitigation of adverse environmental impacts on paleontological resources that result from the development of public land.

Local

The WPWMA is a JPA composed of Placer County and the cities of Lincoln, Rocklin, and Roseville to own and operate a regional recycling facility and sanitary landfill. As a JPA, the WPWMA considers local regulations and consults with local agencies, but the County's and cities' regulations are not applicable, because the County and cities do not have jurisdiction over the proposed project. Accordingly, the following discussion of local goals and policies associated with paleontological resources is provided for informational purposes only.

The Placer County General Plan (2013) includes the following relevant goals and policies regarding paleontological issues:

- GOAL 5.D: To identify, protect, and enhance Placer County's important historical, archaeological, paleontological, and cultural sites, and their contributing environment.
  - Policy 5.D.6: The County shall require that discretionary development projects identify and protect from damage, destruction, and abuse, important historical, archaeological, paleontological, and cultural sites and their contributing environment. Such assessments shall be incorporated into a Countywide cultural resource data base, to be maintained by the Division of Museums.

- Policy 5.D.7: The County shall require that discretionary development projects are designed to avoid potential impacts to significant paleontological or cultural resources whenever possible. Unavoidable impacts, whenever possible, shall be reduced to a less than significant level and/or shall be mitigated by extracting maximum recoverable data. Determinations of impacts, significance, and mitigation shall be made by qualified archaeological (in consultation with recognized local Native American groups), historical, or paleontological consultants, depending on the type of resource in question.

9.3 Impact Analysis and Mitigation Measures

9.3.1 Thresholds of Significance

The thresholds of significance for assessing impacts come from the CEQA Environmental Checklist. For geology and soils, the CEQA Checklist asks whether the project would do the following:

- Directly or indirectly cause potential substantial adverse effects, including the risk of loss, injury, or death involving the following:
  - Rupture of a known earthquake fault, as delineated on the most recent Alquist-Priolo Earthquake Fault Zoning Map issued by the State Geologist for the area or based on other substantial evidence of a known fault? (CGS 2018)
  - Strong seismic ground shaking?
  - Seismic-related ground failure, including liquefaction?
  - Landslides?
- Result in substantial soil erosion or the loss of topsoil?
- Be located on a geologic unit or soil that is unstable, or that would become unstable as a result of the project, and potentially result in on- or offsite landslide, lateral spreading, subsidence, liquefaction, or collapse?
- Be located on expansive soil, as defined in Table 18-1-B of the *Uniform Building Code* (*Public Resources Code 21000-21189* and the *California Code of Regulations*, Title 14, Division 6, Chapter 3, Sections 15000-15387), creating substantial direct or indirect risks to life or property?

Because the site operations do not include use of septic systems for either plan concept, the CEQA Checklist item referencing the ability of the site soils to support septic tanks or alternative wastewater disposal systems is not evaluated in this Draft EIR (DEIR).

Paleontological Resources.

For paleontological resources, the CEQA Checklist asks whether the proposed project would

- Directly or indirectly destroy a unique paleontological resource or site or unique geologic feature?

Appendix G (part V) of the CEQA Guidelines provides guidance relative to significant impacts on paleontological resources, which states, "a project will normally result in a significant impact on the environment if it will…disrupt or adversely affect a paleontological resource or site or unique geologic feature, except as part of a scientific study." PRC Section 5097.5 specifies that any unauthorized removal of paleontological remains is a misdemeanor.

9.3.2 Impacts and Mitigation Measures

IMPACT 9-1	**Risks Related to Seismic Activity**. The proposed project is not expected to directly or indirectly cause potential substantial adverse effects associated with earthquake faults, strong seismic shaking, liquefaction, or landslides. Therefore, this impact would be **less than significant.**

Plan Concept 1

Site-Wide.

The project site is not located within an Alquist-Priolo earthquake fault zone (CGS 2018), and there are no known active faults located within the project site (Idriss 2001, as referenced in Golder 2017) (Figure 9-3). The nearest active faults are the Spenceville fault and Mysterious Ridge segment, which are located 13 miles east and 27 miles west, respectively. These two faults represent the primary sources of potential seismic shaking at the site. As discussed in Section 9.1.3, a major seismic event on either of these faults is not expected to result in significant ground motion (less than 0.15g, corresponding to strong perceived shaking and light potential damage) (Idriss 2001, as referenced in Golder 2017). Furthermore, the western and central parts of Placer County generally experience low seismicity (Placer County 1994). The project would be required to be designed and constructed in accordance with the current *California Building Standards Code* (CBC), which contains specifications to minimize adverse effects on structures caused by ground shaking from earthquakes and to minimize secondary seismic hazards (such as ground lurching and liquefaction).

The project site is not expected to experience a ground rupture or strong seismic ground shaking because of a known earthquake fault. Because the solid waste management project facilities, including complementary and programmatic elements, would be designed in conformance with CBC building requirements, if the site did experience a large seismic event, impacts would result in minimal adverse impacts. Thus, implementation of the proposed project would not directly or indirectly expose people or structures to substantial adverse effects related to seismic hazards, including the risk of loss, injury, or death involving these events. This impact would be less than significant.

The sandy clay and silty sand deposits at the project site are generally classified as nonliquefiable, based on site-specific geotechnical laboratory testing. The site-specific geotechnical testing also indicated liquefaction potential of sand deposits at the project site is negligible (Golder 2017). No areas indicating liquefaction potential have been delineated at the project site (Figure 9-4). Therefore, the project site is not expected to experience liquefaction, and the proposed project would not directly or indirectly expose people or structures to potential substantial adverse effects, including the risk of loss, injury, or death involving a liquefaction event. Therefore, this impact would be less than significant.

Landfill Expansion.

Because of the project site's relatively flat terrain, landslides are not a concern for most of the solid waste elements and for all of the complementary and programmatic elements. However, the operation of a landfill includes the establishment of artificial slopes that can become unstable if not properly designed. This instability can occur along cut slopes, interim refuse fill slopes, soil stockpile slopes, and final cover slopes.

During the design of individual landfill modules, the interim refuse fill slopes are evaluated for stability. This includes the submittal of an engineering design report to the regulatory agencies for review and

approval. The engineering design report presents a maximum interim refuse fill plan with supporting slope stability calculations that consider static and dynamic loading conditions. A similar slope stability analysis is conducted for proposed soil stockpiles to prevent the slopes of the stockpiles from failing.

For the existing WRSL, the stability of excavated (cut) slopes required to achieve proposed base grades was evaluated by Golder (2017). An idealized cut slope inclined at 2H:1V into the onsite soils was analyzed as a worst-case condition, and, in addition to the cut slope, it was assumed that refuse disposal on top of and adjacent had been completed to an elevation of 265 feet AMSL, based on a limiting elevation of 265 feet AMSL. The results of the stability analysis indicated that the modeled slope will be stable under the assumed conditions. The analysis assumed that after the cut slope is excavated and the liner system installed, refuse will be placed in the cell up against the slope. The placement of refuse will tend to buttress the cut slope and will increase the factor of safety against instability. Based on this analysis, excavation slopes around the sides of the landfill modules still to be constructed within the WRSL are proposed to be inclined at 2H:1V (Golder 2017).

The stability of the final cover system for the existing WRSL was evaluated with consideration of both static and dynamic loading conditions. The evaluation demonstrated that the final grading plan exceeds the regulatory requirements of Title 27 and Subtitle D (Golder 2017). The final cover grades for the existing WRSL include side slopes inclined at 3.5H:1V with intermediate benches every 50 vertical feet (Golder 2017).

Implementation of Plan Concept 1 would include expansion of the existing Class II landfill. Title 27 would require the proposed landfill (Class II or III) expansion to be designed for stability under both static and dynamic loading conditions. Therefore, the expanded landfill would not be expected to directly or indirectly cause substantial adverse effects, including the risk of loss, injury, or death involving seismic activity. This impact would be less than significant.

Plan Concept 2

As described in Chapter 3, Project Description, the primary differences between Plan Concept 1 and Plan Concept 2 are related to where various facilities would be located on the WPWMA's property and when various facilities would be developed. These differences do not change the conclusions identified for Plan Concept 1. Implementation of Plan Concept 2 would include the construction of a new Class II or III landfill on the western property that would create artificial slopes similar to those evaluated at the WRSL. The proposed project would be required to conform to design requirements in Title 27, Section 20250, for Class II landfills or Title 27, Section 20370, Seismic Design for Class III landfills, which requires that Class II landfills be designed to withstand the MPE without damage to the foundation or to the structures that control leachate, surface drainage, erosion, or landfill gas. In addition, Title 27 requires the preparation of a stability analysis prior to landfill module construction activities. This stability analysis would include the preparation of an engineering design report that would evaluate slope stability and identify appropriate slope angles for the cut slopes, interim refuse fill slopes, soil stockpile slopes, and final cover slopes. Because the slopes associated with the new landfill would be required by Title 27 to be designed to be stable, the new landfill would not be expected to directly or indirectly cause potential substantial adverse effects, including the risk of loss, injury, or death involving seismic activity. As such, impacts related to seismic activity as a result of implementing Plan Concept 2 would be the same as those described for Plan Concept 1.

IMPACT 9-2	**Potential for Soil Loss or Erosion**. The proposed project is not anticipated to cause substantial soil erosion or the loss of topsoil, because of the implementation of best management practices to control erosion. The impact of soil loss or erosion from implementation of the proposed project would be **less than significant**.

Plan Concept 1

Site-Wide.

Native soil types at the project site have moderate to severe water erosion potentials. Surface soils and near-surface soils potentially subject to excavation during construction at the project site are predominantly fine-grained silts and clays. Grading would expose soil to erosion by removing the vegetative cover. Rain and wind may potentially further detach soil particles and transport them offsite. Construction activities associated with project site development, including grading, vegetation clearing, and excavation, have the potential to cause soil erosion or result in loss of topsoil. These impacts are discussed in further detail in the following sections for each of the Plan Concept 1 elements.

Landfill Expansion

The existing SWPPP identifies best management practices (BMPs) that are required to be implemented at the WRSL (Michael Baker International 2015). Most areas of the project site are relatively flat with natural slopes ranging up to 9 percent with limited erosion potential. However constructed slopes associated with the engineered landfill part of the site are significantly greater, ranging up to 35 percent for the final cover, as indicated by the topographic map on Figure 9-1. As described by Golder (2017), erosion and soil loss at the landfill are controlled through a system of engineered controls and practices. These practices would be required to be implemented at the expanded landfill proposed on the eastern property associated with Plan Concept 1 and are described as follows:

- By September 1 of each year, the landfill operator provides a winter operations plan describing wet-weather operations, stormwater and waste-contact-water control, erosion, and sediment control.
- Straw wattles, straw bales, riprap, and silt fences, are placed on slopes and low areas to control erosion as appropriate.
- Erosion is controlled and runoff conveyed to the surface water management system at manageable, nonscouring flow rates.
- Erosion-control-lined V-ditches convey stormwater runoff, with drainage ditches having greater than 3 percent slope lined with asphalt concrete of other erosion protection material.
- A 1-foot thick vegetative erosion-control layer by the application of appropriate shallow rooting plants is used to protect slopes from erosion caused by storm water runoff.
- Quickly repair erosion damage or cracks that develop in intermediate soil cover layers, which are placed in areas of the landfill where filling with waste is not anticipated within 180 days.
- Applying water or planting temporary vegetative cover on intermediate soil cover layers when windy conditions might cause recurrent fugitive dust or soil loss.
- Intermediate soil covers placed after the waste has been brought up to final grade consist of 12 inches of soil compacted to minimize erosion with at least the top 6 inches free of waste or other deleterious materials.

- Local depressions and erosion gullies in intermediate soil cover layers are repaired before final cover is placed.
- Minimum landfill final cover requirements include an erosion-resistant layer that consists of one of the following: (1) a minimum of 1-foot-thick vegetative soil layer capable of sustaining native plant species and resisting foreseeable erosion from wind and precipitation or (2) a mechanically erosion-resistant layer that is not susceptible to ultraviolet light degradation and is capable of resisting foreseeable erosion from wind and precipitation such as a 1-foot thick layer of cobbles and gravel.
- Regular landfill cover inspection and maintenance is performed.

The erosion potential associated with existing landfill operations was also considered when developing the site's storm water management system and BMPs described in the SWPPP. The components of the SWPPP are described in further detail in Chapter 12, Hydrology and Water Quality, of this DEIR. The SWPPP would be required to be updated to include specific measures and stormwater system designs applicable to the expanded landfill on the eastern property associated with Plan Concept 1. Because erosion associated with the landfill expansion element would be temporary and controlled through the use of BMPs, impacts would be less than significant.

In-Place Waste Excavation

Plan Concept 1 includes the excavation of existing buried waste previously placed in non-Subtitle D lined Modules 1, 2, 10, and 11 and relocating the waste to an onsite Subtitle D-compliant module. Waste relocation activities at the pre-Subtitle D area would include removal of leachate and landfill gas collection infrastructure, buried waste, soil cover, and, as appropriate, any underlying soils affected by a release from the landfill and posing a threat to water quality or the environment. The relocation of the contents of these modules to new modules is estimated to require a total of 300 days to complete but may be implemented in phases (Golder 2018).

The erosion of soil and exposed, previously buried waste during excavation and relocation activities would be controlled under separate, project-specific SWPPPs (or modification to an existing SWPPP) that would include BMPs to control soil and exposed waste erosion. Implementation of the BMPs would be expected to protect workers, the public, and local surface water drainages from exposure to contaminants. Examples of BMPs that would be implemented include the following:

- Covering exposed waste at the end of each work day with a minimum of 6 inches of compacted earthen material or an approved alternative daily cover (for example, tarps) to control vectors, fires, odors, blowing litter, and scavenging.
- Placing intermediate cover over exposed waste and temporary waste slopes where no additional waste excavation or waste relocation work would occur within 180 days. Intermediate cover would consist of a minimum 1-foot-thick layer of compacted earthen material, including daily cover soil. The intermediate cover would protect otherwise exposed waste, thereby controlling vectors, fires, odors, blowing litter, and scavenging during any potential lapses in waste relocation activities (Golder 2018).
- Provide positive drainage at the top of excavation slopes to control stormwater run-on into the excavation. The remaining excavation would be graded such that precipitation from the 100-year, 24-hour design storm would drain and prevent water from rising above the waste at the toe of the temporary waste slope. This would prevent ponding water from posing a threat for seeping into buried waste and causing a potential for leachate development. WPWMA personnel or their designee would also visit the site after precipitation events that exceed 2 inches of rainfall and coordinate ponded water pumping if needed. Slopes that would be cut from native soils would be constructed without the intermediate cover (Golder 2018).

- Excavated areas to be developed with a Subtitle D composite liner system would be graded at about 1.5 to 3.5 percent to flow to the northeastern corner of the excavation. Slopes would be seeded at the conclusion of construction to control erosion. Additional erosion controls, such as diversion berms, hay bales, and straw wattles, would be used as necessary during construction in accordance with applicable SWPPPs (Golder 2018).

Construction would be temporary, and the potential for offsite soil erosion would be controlled by using the previously described BMPs. Therefore, soil erosion associated with the excavation and reburial of existing waste would be considered a less-than-significant impact.

Complementary and Programmatic Elements

In addition to solid waste elements, complementary and programmatic elements may be developed on WPWMA properties. Under the project level, for Plan Concept 1, up to 300,000 square feet of building plus exterior infrastructure are reserved in the northern part of the western property for the complementary solid waste management elements. Under the programmatic level, for Plan Concept 1, up to 1.9 million square feet have been reserved for these elements primarily within the northern and southern extents of the western property, and on the center property. However, opportunities may arise that would support locating some of these complementary and programmatic elements nearer to the solid waste project elements or within areas not yet developed with solid waste project elements.

Construction activities associated with the project-level complementary elements include excavating for utilities and building foundations and grading for internal roadways and parking lots. These construction activities have the potential to cause soil erosion or result in loss of topsoil. The proposed complementary elements included in this project would require a project-specific SWPPP that would include BMPs to control soil erosion. BMPs would include the following:

- Install sediment and stormwater controls before initiating surface-disturbing activities.
- Schedule construction activities to avoid direct soil and water disturbance during periods of the year when heavy precipitation and runoff are likely to occur.
- Install suitable stormwater and erosion-control measures to stabilize disturbed areas and waterways before seasonal shutdown of project operations or when severe or successive storms are expected.
- Maintain erosion and stormwater controls as necessary for proper and effective functioning.
- Routinely inspect construction sites to verify that erosion and stormwater controls are implemented and functioning as designed and are appropriately maintained.
- Mechanical erosion-control measures may include wattles, erosion nets, terraces, side drains, blankets, mats, riprapping, mulch, tackifiers, pavement, soil seals, and windrowing construction slash at the toe of fill slopes.
- Vegetative erosion-control measures are generally a supplementary device used to improve the effectiveness of mechanical measures, but they can be effective and complete by themselves. Mechanical and vegetative measures will be periodically inspected to determine their effectiveness. BMPs included in the SWPPP will be included in applicable project plans, contract provisions, and specifications. Project construction inspectors and their supervisors will monitor work accomplishment and effectiveness to verify that design standards, project plan management requirements, and BMPs are met.

Construction activities associated with the build-out of project-level complementary elements would be temporary, and the potential for offsite soil erosion would be controlled by using the previously described

BMPs. Therefore, construction of the project-level complementary elements would have a less-than-significant impact on soil erosion.

Build-out of the programmatic elements involve the same construction activities identified for the project level. Construction of the additional programmatic elements (1.6 million square feet) would also require separate, project-specific SWPPPs for each project. Therefore, construction of the program level of complementary and programmatic elements would have a less-than-significant impact on soil erosion.

Plan Concept 2

As described in Chapter 3, Project Description, the primary differences between Plan Concept 1 and Plan Concept 2 are related to where various facilities would be located on WPWMA's property and when various facilities would be developed. These differences do not change the conclusions identified for Plan Concept 1. As such, impacts related to soil loss or erosion as a result of implementation of Plan Concept 2 would be the same as described for Plan Concept 1.

IMPACT 9-3	**Potential for Unstable Soils**. The project site is not located on a geologic unit or soil that is unstable, and the project elements would not be expected to experience unstable soil conditions. Therefore, this impact would be **less than significant**.

Plan Concept 1

Site-Wide.

The project site is not located on a geologic unit or soil that is unstable. As described under Impact 9-1, the Plan Concept 1 elements would not be exposed to hazards such as onsite or offsite landslides, surface ruptures, ground failures, liquefaction, or collapse that would contribute to unstable conditions. Factors affecting soil stability include soil saturation and slope. Given the depth to groundwater of approximately 90 feet below ground surface at the site, soil saturation from rising groundwater is not expected to adversely affect soil stability. Given the relatively flat slopes of the native surface soils and the requirement that the Plan Concept 1 elements be constructed consistent with the CBC and any applicable building permit requirements, the solid waste and complementary and programmatic elements, excluding the landfill discussed in the following section, would not be expected to be affected by unstable soils.

Landfill Expansion.

The operation of a landfill includes the establishment of artificial slopes that can become unstable if not properly designed and constructed. This instability can occur along cut slopes, interim refuse fill slopes, soil stockpile slopes, and final cover slopes. However, as described under Impact 9-1, because the slopes associated with the new landfill would be required by Title 27 to be designed to be stable, the new landfill would not be expected to result in unstable soil conditions. Small, localized areas of settlement of non-native soils in the engineered landfill cover may occur and be observed periodically during landfill inspections. However, these settlement areas would be promptly repaired as part of routine landfill cover repair and maintenance practices described by Golder (2017). Thus, the proposed expanded landfill on the eastern property associated with Plan Concept 1 would not be exposed to unstable soils, and this impact would be less than significant.

Plan Concept 2

As described in Chapter 3, Project Description, the primary differences between Plan Concept 1 and Plan Concept 2 are related to where various facilities would be located on the WPWMA's property and when various facilities would be developed. These differences do not change the conclusions identified for Plan Concept 1. Implementation of Plan Concept 2 would include the construction of a new landfill on the western property that would create artificial slopes similar to those evaluated at the WRSL. Title 27 requires the preparation of a stability analysis prior to landfill module construction activities. This stability analysis would include the preparation of an engineering design report for the new western landfill that would evaluate slope stability and identify appropriate slope angles for the cut slopes, interim refuse fill slopes, soil stockpile slopes, and final cover slopes. Because the slopes associated with the new landfill would be required by Title 27 to be designed to be stable, the new landfill would not be expected to result in unstable soil conditions. As such, impacts related to unstable soils as a result of implementation of Plan Concept 2 would be the same as described for Plan Concept 1.

IMPACT 9-4	**Presence of Expansive Soils**. The presence of expansive soils on the site could expose building foundations to damage caused by soil expansion and contraction, which can create risks to life and property. This potential risk to life and property associated with the presence of expansive soils on the site would be a **significant** impact.

Plan Concept 1

As discussed in Section 9.1.4, soils at the site are generally moderately to highly expansive, with areas of low-expansive soils. Thus, there is a potential for buildings and other structures associated with the solid waste management and complementary and programmatic elements of Plan Concept 1 to be located on expansive soil, which, through the action of expansion or contraction, can lead to cracking, lifting, subsidence, and structural damage to utilities, building foundations, and occupied overlying structures. Damage to the proposed project's buildings and facilities could create risks to life or property if a failure were to occur. The potential for expansive soils to create risks to life or property with implementation of the proposed project would be a significant impact.

Plan Concept 2

As described in Chapter 3, Project Description, the primary differences between Plan Concept 1 and Plan Concept 2 are related to where various facilities would be located on the WPWMA's property and when various facilities would be developed. These differences do not change the conclusions identified for Plan Concept 1. As such, impacts related to expansive soils as a result of implementation of Plan Concept 2 would be the same as described for Plan Concept 1.

Mitigation Measure 9-4: Presence of Expansive Soils

Consistent with CBC Section 1808.2 and Placer County General Plan Policy 8.A.1, the WPWMA will conduct a geotechnical investigation prior to constructing any buildings or other structures designed for human occupancy that may be exposed to expansive soils. The geotechnical report will be prepared by a qualified and licensed civil engineer, geotechnical engineer, or certified engineering geologist. During project construction, all recommendations outlined in the geotechnical report will be implemented, subject to revision by the civil or geotechnical engineer or engineering geologist, where needed, and verified by a construction quality assurance observer. Typical recommendations could include over-excavating the foundations, reinforcing the foundations, and using fill soil to minimize the exposure of the foundations to the effects of the expansive soils.

Level of Significance after Mitigation

Implementation of Mitigation Measure 9-4 requires the WPWMA to conduct a geotechnical investigation prior to constructing any buildings or other structures designed for human occupancy in conformance with CBC Section 1808.2. Under CBC Section 1808.2, foundations placed on or within expansive soils must be designed to resist differential volume changes and to prevent damage to the supported structures. With implementation of Mitigation Measure 9-4, the potential for expansive soils to create risks to life and property as a result of the proposed project would be reduced to **less than significant**.

IMPACT 9-5	**Potential Destruction of Paleontological Resources**. Fossils are known to occur in the project vicinity, and ground disturbance from project construction activities could disturb or destroy paleontological resources. Impacts on previously undiscovered paleontological resources from ground-disturbing construction activities would be **significant**.

Plan Concept 1

Fossils have been found in the greater Sacramento region within many local formations, including the Turlock Lake, Riverbank, and Mehrten formations. The Turlock Lake Formation is found at the surface and beneath the project site and surrounding area. Fossils have been found in the Turlock Lake Formation in the Roseville area, including a horse hoof fossil from a railroad cut and a fossil pine branch with needles. There are no documented studies or observations of paleontological resources at or near the project site. Given that the Turlock Lake Formation is present at the surface at the project site and has been documented to contain fossils in the Roseville area, as close as approximately 1 mile southeast of the project site, paleontological resources potentially could be encountered during grading and excavation activities associated with the implementation of the solid waste management and complementary and programmatic elements for Plan Concept 1.

Although the potential for disturbance to paleontological resources would be very low because of the lack of previous finds at the site and the limited number of discoveries in the region, their discovery is possible, based on the presence of geologic formations known to contain such resources. Therefore, the potential for ground-disturbing construction activities associated with implementation of the solid waste management and complementary and programmatic elements to disturb or destroy undiscovered paleontological resources would be a significant impact.

Plan Concept 2

As described in Chapter 3, Project Description, the primary differences between Plan Concept 1 and Plan Concept 2 are related to where various facilities would be located on the WPWMA's property and when various facilities would be developed. These differences do not change the conclusions identified for Plan Concept 1. As such, impacts related to paleontological resources as a result of implementation of Plan Concept 2 would be the same as described for Plan Concept 1.

Mitigation Measure 9-5: Potential Destruction of Paleontological Resources

If evidence of any paleontological features or deposits are discovered during construction-related earth-moving activities (for example, vertebrate, invertebrate, or plant fossils, traces, or trackways), the WPWMA shall halt ground-disturbing activity in the area of the discovery and retain a qualified paleontologist to assess the significance of the find. If the paleontologist determines that the find does not constitute a significant or unique resource, construction may proceed. If the paleontologist determines that further

information is needed to evaluate significance, a data recovery plan will be prepared. If the find is determined to be significant by the qualified paleontologist, they will work with the WPWMA to avoid disturbance to the resources. If complete avoidance is not feasible in light of project design, economics, logistics, or other factors, accepted professional standards for documentation of any find and recovery of important fossils will be followed.

Level of Significance after Mitigation.

Implementation of Mitigation Measure 9-5 establishes the required procedures to be followed if paleontological resources are discovered during construction activities, including immediately stopping work and retaining a qualified paleontologist to evaluate the find and determine significance. Because this mitigation would result in the avoidance of paleontological resources if they are discovered or other appropriate measures (for example, documentation or recovery) if avoidance is not possible, the impact would be reduced to **less than significant**.

9.4 References

Ascent Environmental (Ascent). 2019. *Final Environmental Impact Report, Sunset Area Plan/Placer Ranch Specific Plan.* Prepared for Placer County. October.

Association of Environmental Professionals. 2020. California Environmental Quality Act (CEQA) Statute & Guidelines, Appendix G.

Central Valley Regional Water Quality Control Board (CVRWQCB). 2020. *Site Inspection Report and Notice of Violation, Western Regional Sanitary Landfill, Placer County.* 24 September.

Crawford Multari & Starr, DKS Associates, Psomas and Associates, Jones & Stokes Associates, Recht Hausrath & Associates, and J. Laurence Mintier & Associates. 1994. *Placer County General Plan Update, Countywide General Plan Final Environmental Impact Report Volume I*. July 26.

Curtis, G. H. 1954. *Mode of origin of pyroclastic debris in the Mehrten Formation of the Sierra Nevada*. University of California Publications. In *Geological Sciences* 29: 453-501. Referenced in IAEG. 2018. Geology of Sacramento, California, United States of America, Geology of the Cities of the World Series. Presented at the XIII IAEG Congress and AEG Annual Meeting, San Francisco, CA, September 17–21.

EDAW. 2000. *Supplemental Draft Environmental Impact Report for the Western Regional Sanitary Landfill.* May. Referenced in Golder. 2017. *Joint Technical Document, Western Regional Sanitary Landfill Placer County, California, Volume I.* August.

Emcon Associates. 1979. *Report of Disposal Site Information, Western Regional Sanitary Landfill Authority, Placer County, California.* April.

Geomechanics, Inc. 1977. *Geotechnical Investigations for Alternate Waste Disposal Sanitary Landfill Sites, Placer County, California*. December.

Golder Associates (Golder). 2001. *Geotechnical Characterization for the Western Regional Sanitary Landfill JTD.* May.

Golder Associates. 2017. *Joint Technical Document, Western Regional Sanitary Landfill Placer County, California, Volume I.* August.

Golder Associates. 2018 *Geotechnical Exploration Report, Proposed Expansion of Western Regional Sanitary Landfill.* August.

Hausback, B. P. and Hilton, R. P. 1994. "Geology in the Sutter Buttes Volcano" Field Trip B. *Guidebook to Selected Field Trips in Northern California*. National Association of Geology Teachers Far Western Section, Fall meeting. pp. 66–82. Referenced in IAEG. 2018. Geology of Sacramento, California, United States of America, Geology of the Cities of the World Series. Presented at the XIII IAEG Congress and AEG Annual Meeting, San Francisco, CA, September 17–21.

Helley, Edward J. and D.S. Harwood. 1985. *Geologic Map of the Late Cenozoic Deposits of the Sacramento Valley and Northern Sierran Foothills, California,* United States Geologic Survey. Referenced in Golder. 2017. *Joint Technical Document, Western Regional Sanitary Landfill Placer County, California, Volume I.* August.

Holdrege & Kull Consulting. 1997. *Groundwater Monitoring Well Installation Report.* November 14.

Idriss, I.M., 2001. *Estimation of Earthquake Ground Motions, Western Regional Sanitary Landfill Site, Placer County, California.* June 25.

International Association for Engineering Geology (IAEG) Congress. 2018. Geology of Sacramento, California, United States of America, Geology of the Cities of the World Series. Presented at the XIII IAEG Congress and AEG Annual Meeting, San Francisco, CA, September 17–21.

Lawrence & Associates. 1995. *Report of Disposal Site Information for the Western Regional Sanitary Landfill, Placer County, California.* February 21. Revised December 18, 1996.

Lawrence & Associates. 1996. *Final Environmental Impact Report for the Western Regional Sanitary Landfill (SCH 94122004)*. June.

Michael Baker International. 2015. *Stormwater Pollution Prevention Plan, Western Placer Waste Management Authority, 3033 Fiddyment Road, Roseville, CA*. June 29.

Moses, L. J. 1985. *A Study of the Neogene Mehrten Formation: stratigraphy, petrology, paleomagnetism, Southwestern Placer County, CA*. MS Thesis, University of California, Davis, CA. p. 97. Referenced in Referenced in IAEG. 2018. Geology of Sacramento, California, United States of America, Geology of the Cities of the World Series. Presented at the XIII IAEG Congress and AEG Annual Meeting, San Francisco, CA, September 17–21.

Placer County. 1994. *Placer County General Plan Update Countywide General Plan Final Environmental Impact Report, State Clearinghouse No. 93082012, Auburn, CA*. July 26

Placer County. 2013. *Countywide General Plan Policy Document, Adopted August 16, 1994; reflects amendments through May 21, 2013*. Auburn, CA.

Raney Planning & Management, Inc. (RMPI). 2006. Clover Valley Large and Small Lot Tentative Subdivision Maps (SLTSM) Recirculated Draft Environmental Impact Report SCH# 93122077. Prepared for the City of Rocklin, CA. January.

Society of Vertebrate Paleontology (SVP). 2010. *Standard Procedures for the Assessment and Mitigation of Adverse Impacts to Paleontological Resources*. Prepared by the Society of Vertebrate Paleontology Impact Mitigation Guidelines Revision Committee, Bethesda, MD. Referenced in Ascent. 2019. *Final Environmental Impact Report, Sunset Area Plan/Placer Ranch Specific Plan.* Prepared for Placer County. October.

State of California Department of Conservation, Geological Survey (CGS). 2018. *Earthquake Fault Zones, A Guide for Government Agencies, Property Owners/Developers, and Geoscience Practitioners for Assessing Fault Rupture Hazards in California, Special Publication 42.*

Uniform Building Code. 1994. Prepared by International Conference of Building Officials.

U.S. Department of Agriculture. 1980. *Soil Survey of Placer County, California, Western Part*. Prepared by the USDA Soil Conservation Service in cooperation with University of California Agricultural Experiment Station. Referenced in Ascent. 2019. *Final Environmental Impact Report, Sunset Area Plan/Placer Ranch Specific Plan.* Prepared for Placer County. October.

U.S. Geological Survey (USGS). 2017. *Areas of Land Subsidence in California.* Accessed October 23, 2017. https://ca.water.usgs.gov/land_subsidence/california-subsidence-areas.html.

10. Greenhouse Gas Emissions and Climate Change

This chapter describes existing conditions related to greenhouse gas (GHG) emissions and global climate change and evaluates the potential impacts that could result from implementing the proposed project under Plan Concept 1 and Plan Concept 2 of the Renewable Placer: Waste Action Plan. The methodology used to estimate GHG emissions associated with construction and operation of the proposed project elements is described; the current state of climate change science and GHG emission sources in California and Placer County are discussed; applicable regulations are summarized; and impacts are evaluated. Where the analysis indicates significant impacts would result from project implementation, mitigation measures are recommended to reduce impacts. The environmental and regulatory settings for GHGs in the project area have been described previously in the Sunset Area Plan (SAP) Draft and Final Environmental Impact Report (Placer County 2018 and 2019, respectively). The descriptions of the environmental and regulatory settings for GHGs in this chapter have been adapted from those references, with updates of pertinent information for the proposed project.

The methods of analysis for GHG emissions are consistent with guidance from the Placer County Air Pollution Control District (PCAPCD), the California Air Resources Board (CARB), and U.S. Environmental Protection Agency (EPA). The analysis addresses pertinent comments from the public and agency scoping period, including general concerns from the Placer County Office of the Executive about air and cumulative impacts.

10.1 Methodology

With implementation of project design measures, the proposed project would generate construction and operational emissions of GHGs, including carbon dioxide (CO_2), methane (CH_4), and nitrous oxide (N_2O). The methods used to estimate GHG emissions and assess potential impacts for the proposed project are consistent with the PCAPCD 2017 *California Environmental Quality Act* (CEQA) *Air Quality Handbook* (PCAPCD 2017) and accepted industry standards. The two separate plan concepts associated with the proposed project have been analyzed at an equal level. Plan Concept 1 and Plan Concept 2 would include similar project elements, but the locations, timing, and characteristics of the elements would differ. The Methodology for Air Quality and Greenhouse Gas Impact Analysis, presented in Appendix C.1 provides additional details regarding the PCAPCD-approved methods used to quantify and analyze potential impacts associated with project-related GHG emissions from construction and operations, as well as fugitive emissions. Emission calculations quantifying GHG emissions estimates for the proposed project are presented in Appendix C.2. LandGEM modeling results showing predicted annual landfill gas (LFG) generation values for the proposed project are included in Appendix C.3.

GHG emissions have been estimated for the incremental increases in activity over time associated with the proposed project; emissions have not been calculated for existing facility operations. Baseline activity levels in 2018 and future activity levels forecasted for 2050 have been quantified to assess the changes in activity levels associated with each plan concept. Some activities, such as landfilling, are expected to extend beyond the project timeframe, but the analysis focuses on impacts through 2050 as the project period, because of uncertainty associated with operations occurring more than 30 years in the future.

Project-related GHG emissions are evaluated in terms of carbon dioxide equivalent (CO_2e) emissions. The 2017 PCAPCD CEQA Handbook defines CO_2e as a "metric used to compare emissions of various greenhouse gases. It is the mass of carbon dioxide that would produce the same estimated radiative forcing as a given mass of another greenhouse gas. Carbon dioxide equivalents are computed by multiplying the mass of the gas emitted by its global warming potential" (PCAPCD, 2017). GHG impacts

for the proposed project were estimated by using global warming potential (GWP) values from the United Nations Intergovernmental Panel on Climate Change (IPCC) Fifth Assessment Report (SAR5). Therefore, a GWP of 28 was used for CH_4 (methane), and a GWP of 265 was used for emissions of N_2O when estimating project-related CO_2e emissions.

To answer the CEQA questions and evaluate the significance of GHG impacts, estimates of total project-related construction emissions and estimated net changes in total operational emissions have been compared with the PCAPCD CEQA significance thresholds for GHG emissions, as described in the 2017 CEQA Air Quality Handbook (PCAPCD 2017).

For impacts identified as significant or potentially significant, mitigation measures have been identified. If feasible, the effectiveness of mitigation measures has been assessed and results qualitatively compared with the applicable thresholds of significance.

As described in the Methodology for Air Quality and Greenhouse Gas Impact Analysis, presented in Appendix C.1, methodologies were developed and used to estimate GHGs for the following existing and proposed sources of emissions:

- Construction Emissions, including GHG emissions associated with combustion of fuels in off-road equipment and off-road and on-road vehicles. Emissions would be generated as a result of construction of new and updated facilities and infrastructure for solid waste elements, complementary and programmatic elements,[34] and supporting elements.
- Operation Emissions, including GHG emissions from fuel combustion in vehicles, equipment, and stationary sources, fugitive LFG, and compost facility process emissions. Operational activities for the proposed project would include incremental increases in the following:
  - Fugitive LFG
  - Operation of the LFG-to-energy plant and flare(s)
  - Compost facility processes
  - Onsite and offsite vehicle trips, including waste haul truck trips and worker commute trips
  - Equipment used to place and cover waste in the landfill modules
  - Equipment and processes to operate updated facilities for materials recovery, composting, construction and demolition waste management, and the public waste and household hazardous waste drop-off areas
  - Electricity generation and consumption
  - Operation of complementary and programmatic elements.[35]

[34] Complementary and programmatic elements will include proposed compatible manufacturing, pilot study area, University research area, and LFG to compressed natural gas area. These are all defined under a variety of light-industrial, laboratory research, and manufacturing land uses. The associated construction emissions were calculated by using CalEEMod with the defined manufacturing land-use type and building footprint area. Construction of 300,000 square feet of building space and 300,000 square feet of parking and roads for complementary elements was analyzed quantitatively. This analysis did not quantitatively evaluate the timing or impacts of full buildout of complementary programmatic elements (1,900,000 square feet of building space and associated parking and roads), nor does it provide project-level analysis of the air quality impacts of construction of specific types of industrial activities. Additional project-level analysis and air permits from PCAPCD may be required prior to construction.

[35] Operation of 300,000 square feet of building space and 300,000 square feet of parking and roads for complementary elements was analyzed quantitatively by using CalEEMod with the defined manufacturing land-use type and building footprint area. This analysis does not provide project-level analysis of the air quality impacts of operation of specific types of industrial activities. Additional project-level analysis and air permits from PCAPCD may be required.

Additional information regarding current site operations can be found in Chapter 1: Introduction. Detailed descriptions of proposed changes associated with Plan Concept 1 and Plan Concept 2 can be found in Chapter 3: Project Description.

As part of the methodology, current emission reduction measures implemented at the Western Placer Waste Management Authority (WPWMA) facilities were identified, and additional best management practices (BMPs) were developed to reduce GHG emissions during construction and operation. These current emission reduction measures and additional BMPs, listed in Table 10-1, would be incorporated into the proposed project as project design measures. Emission reduction benefits are referenced and reflected in the construction and operation emissions calculations provided in Appendix C.2.

Table 10-1. Current Greenhouse Gas Emission Reduction Measures and Best Management Practices Incorporated as Project Design Measures

Current Emission Reduction Measures: The WPWMA currently implements the following emissions reductions measures on an ongoing basis, and these measures would continue to be implemented during construction and operation of the proposed project:

- Onsite vehicles are routed along the most direct, feasible routes (while also considering safety).
- Electrically powered equipment is used to the extent feasible.
- Speed limits of 25 mph on paved roads and 15 mph on unpaved roads are currently enforced. Speed limits of 15 mph on paved and unpaved roads will be enforced under the proposed project.
- Odor mitigation measures outlined in Chapter 6 are implemented, and many also reduce GHG emissions.

Construction Emission Reduction Best Management Practices:

- The WPWMA would require the following Construction BMPs and include them as specifications for project-related construction and building contracts and Standard Notes on Grading and Improvement Plans submitted for construction:
  - Maintain equipment per manufacturer's specifications
  - Exhaust emissions cannot exceed PCAPCD Rule 202 visible emissions limits; if exceeded, operations must cease and equipment must be repaired within 72 hours
  - Fuel all off-road and portable diesel equipment with CARB-certified diesel fuel
  - Minimize idling time to less than 5 minutes for all diesel equipment. Signs shall be posted in the designated queuing areas or job sites to remind drivers and operators of the 5-minute idling limit
  - No diesel engine idling, or staging or queuing areas, within 1,000 feet of any sensitive receptor
  - No use or manufacture of cutback or emulsified asphalts unless compliant with PCAPCD Rule 217
  - Use electrical engines and equipment or clean fuels in generators rather than temporary diesel generators to the degree practical
  - Obtain air permits for any device or process that emits 2 pounds per day or more of pollutants, prior to construction or building permit issuance (PCAPCD Rule 501)
- Contractors must certify compliance with the State Off-Road Diesel Regulation, and all diesel construction equipment must meet CARB's Tier 4 standards for off-road heavy-duty diesel engines, if feasible.
- Contractors must certify compliance with the State On-Road Diesel Regulation, and all on-road heavy-duty diesel trucks must meet CARB's Tier 3 standards for on-road heavy-duty diesel engines, or better, if feasible.
- Building contractors must provide the following at truck loading/unloading facilities:
  - Power outlets (one 110/208-volt power outlet for every two dock doors or truck parking spaces)
  - Signage to indicate no idling of diesel engines for longer than 5 minutes
  - Posted instructions for idling trucks to connect to outlets to run auxiliary equipment

Table 10-1. Current Greenhouse Gas Emission Reduction Measures and Best Management Practices Incorporated as Project Design Measures (continued)

▪ Commercial buildings must be designed to meet Green Building Standards, including the following:[a] – Achieve 10 percent or greater reduction in energy use compared with 2016 Title 24 code-compliant building through energy efficiency measures or onsite renewable energy systems – Cool roofs – Water efficiency and conservation – Accessible 100-volt electrical receptacles for powering of landscaping equipment and alternatives to fossil fuel generators ▪ Buildings must meet 2019 Title 24 energy efficiency standards (effective on January 1, 2020) (CEC 2018).[a] ▪ Contractors must include the following as conditions of building permits:[a] – 10 percent of parking spaces to provide electric vehicle service (charging) equipment (EVSE), or a minimum of 2 EVSE spaces for building with 2 to 10 spaces – If more than 20 parking spaces, provide 5 percent of spaces as clearly marked, dedicated preferential parking spaces for carpools and zero-emission vehicles – Bicycle parking areas near entrances
Operation Emissions Reduction BMPs:
▪ The WPWMA would require the following Operational BMPs and include them as specifications on project-related contracts: – Implement emission reduction BMPs from previously listed Construction Emission Reduction BMPs, to the extent appropriate and feasible for solid waste elements – Design landscaped areas with native drought-resistant plants (ground covers, shrubs and trees) with particular consideration in plantings that are not reliant on gas-powered landscape maintenance equipment.[a] ▪ Fully transition composting process from windrows to aerated static piles (ASP), including the following: – Composting operations are to be performed in a manner consistent with the 2020 SWOP (Appendix C.6) based on weather predictions and odor risk management results. – Grinding, management, mixing, pile construction and maintenance, curing of green waste, food waste, and ASP composting materials, and storage of finished product will be conducted according to required schedules from the 2020 SWOP (Appendix C.6). – A biofilter cover composed of 12 inches of finished compost shall be applied over ASP piles. – ASP surface areas will be washed down daily to remove leachate. – Leachate and compost pond aeration systems will be managed, monitored, and periodically cleaned to maintain proper operating conditions. ▪ Where feasible and practical, perform onsite material management with electronic conveyors or trucks equipped with Tier 4 engines. ▪ Provide or use power outlets (one 110/208-volt power outlet for every two dock doors or truck parking spaces) at truck loading and unloading facilities. ▪ Comply with posted signage indicating no idling of diesel engines for more than 5 minutes. ▪ Comply with posted instructions for idling trucks to connect to outlets to run auxiliary equipment. ▪ Optimize efficiency of LFG collection system. ▪ Optimize use of remaining LFG-to-energy plant capacity to produce electricity from collected LFG and to minimize flaring of collected LFG.

[a] Project Design Measure for buildings constructed or operated as part of the proposed project or complementary and programmatic elements.

10.2 Environmental Setting

10.2.1 Physical Science Basis

Certain gases in the Earth's atmosphere, classified as GHGs, play a critical role in determining the Earth's surface temperature. Solar radiation enters the Earth's atmosphere from space. A portion of the radiation

is absorbed by the Earth's surface, and a smaller portion of this radiation is reflected toward space. This absorbed radiation is then emitted from the Earth as low-frequency infrared radiation. The frequencies at which bodies emit radiation are proportional to temperature. Earth has a much lower temperature than the sun; therefore, the Earth emits lower frequency radiation. Most solar radiation passes through GHGs; however, infrared radiation is absorbed by these gases. As a result, radiation that otherwise would have escaped back into space is instead "trapped," resulting in a warming of the atmosphere. This phenomenon, known as the greenhouse effect, is responsible for maintaining a habitable climate on Earth.

Prominent GHGs contributing to the greenhouse effect are CO_2, methane CH_4, nitrous oxide N_2O, hydrofluorocarbons, perfluorocarbons, and sulfur hexafluoride. Human-caused emissions of these GHGs in excess of natural ambient concentrations are found to be responsible for intensifying the greenhouse effect and leading to a trend of unnatural warming of the Earth's climate, known as global climate change or global warming. It is "extremely likely" that most of the observed increase in global average surface temperatures from 1951 to 2010 was caused by the anthropogenic increase in GHG concentrations and other anthropogenic forcing (IPCC 2014).

Climate change is a global problem. GHGs are global pollutants, unlike criteria air pollutants and toxic air contaminants, which are pollutants of regional and local concern. GHGs have long atmospheric lifetimes (1,000 to several thousand years). GHGs persist in the atmosphere long enough to be dispersed around the globe. Although the lifetime of any GHG molecule depends on multiple variables and cannot be determined with any certainty, it is understood that more CO_2 is emitted into the atmosphere than is sequestered by ocean uptake, vegetation, and other forms of sequestration. Of the total annual human-caused CO_2 emissions, approximately 55 percent is estimated to be sequestered through ocean and land uptake every year, averaged over the last 50 years, whereas the remaining 45 percent of human-caused CO_2 emissions remains stored in the atmosphere (IPCC 2013).

The quantity of GHGs in the atmosphere that ultimately result in climate change is not precisely known, but it is unlikely that any single project would measurably contribute to an incremental change in the global average temperature or to global or local climates or to microclimates. Thus, from the standpoint of CEQA, GHG impacts relative to global climate change are inherently cumulative.

10.2.2 Greenhouse Gas Emission Sources

GHG emissions are attributable in large part to human activities associated with the transportation, industrial and manufacturing, utility, residential, commercial, and agricultural emissions sectors (CARB 2014a, 2020). In 2018, human activities in California released 425 million metric tons (MMT) of CO_2e, which is 6 MMT below the 2020 GHG limit of 431 MMT CO_2e. The primary source of GHGs in California is transportation, contributing 39.9 percent of the state's total GHG emissions. Industrial emissions were the second-largest source, contributing 21.0 percent of the state's GHG emissions (CARB 2020). Emissions from the recycling and waste sector include CO_2, CH_4, and N_2O emissions from landfills and from commercial-scale composting. Emissions from recycling and waste, which comprise 2 percent of California's GHG inventory, have grown by 19 percent since 2000 (CARB 2020).

The Placer County Community-Wide and County Operations 2015 Greenhouse Gas Emission Inventories document was prepared by Sierra Business Council and Pacific Gas and Electric Company, updated January 2018 (Placer 2018). This inventory provides the most recent GHG inventory for unincorporated Placer County community-wide activities and sources, and County operations. Total community-wide GHG emissions were reported as 1,181,915 metric tons (MT) of CO_2e for 2015. While solid waste related operations represent one of the lowest community-wide sources of GHG (7.4 percent of the total community-wide GHG emissions), the solid waste sector is the most significant contributor of emissions attributed to County-related operations (for example, buildings, facilities and lighting; vehicle and transit

fleet operations, and County employee vehicle commutes) inventory because of the high GWP of the CH_4 emitted at the Western Regional Sanitary Landfill (WRSL).

10.2.3 Effects of Climate Change on the Environment

According to the IPCC, which was established in 1988 by the World Meteorological Organization and the United Nations Environment Programme, global average temperature is expected to increase by 3 to 7 degrees Fahrenheit (°F) by the end of the century, depending on future GHG emission scenarios (IPCC 2014). According to the California Natural Resources Agency (CNRA), temperatures in California are projected to increase by 2 to 5°F by 2050 and by 4 to 9°F by 2100 (CNRA 2009).

Other environmental resources could be indirectly affected by the accumulation of GHG emissions and resulting rise in global average temperature. In recent years, California has been marked by extreme weather and its effects. According to CNRA's draft report Safeguarding California Plan: 2017 Update (CNRA 2017), California experienced the driest 4-year statewide precipitation on record from 2012 through 2015; the warmest years on average in 2014, 2015, and 2016; and the smallest and second-smallest Sierra snowpack on record in 2015 and 2014 (CNRA 2017). In contrast, the northern Sierra Nevada experienced its wettest year on record in 2016 (CNRA 2017). The changes in precipitation exacerbate wildfires throughout California with increasing frequency, size, and devastation. As temperatures increase, the increase in precipitation falling as rain rather than snow also could lead to increased potential for floods because water that would normally be held in the snowpack of the Sierra Nevada and Cascade Range until spring would flow into the Central Valley concurrently with winter rainstorm events (CNRA 2017). Furthermore, in an extreme scenario involving the rapid loss of the Antarctic ice sheet, sea levels along California's coastline could rise by 10 feet by 2100, which is approximately 30 to 40 times faster than sea level rise experienced over the last century (CNRA 2017).

Changes in temperature, precipitation patterns, extreme weather events, and sea level rise have the potential to affect and decrease the efficiency of thermal power plants and substations, decrease the capacity of transmission lines, disrupt electrical demand, and threaten energy infrastructure with the increased risk of flooding (CNRA 2017).

Water availability and changing temperatures, which affect the prevalence of pests, disease, and species, directly affect crop development and livestock production. Other environmental concerns include decline in water quality, groundwater security, and soil health (CNRA 2017). Vulnerabilities of water resources also include risks of degradation of watersheds, alteration of ecosystems and loss of habitat, impacts on coastal areas, and ocean acidification (CNRA 2017). The ocean absorbs approximately one-third of the CO_2 released into the atmosphere every year from industrial and agricultural activities, changing the chemistry of the ocean by decreasing the pH of seawater. This ocean acidification is harmful to marine organisms, especially calcifying species, such as oysters, clams, sea urchins, and corals (CNRA 2017).

10.3 Regulatory Setting

All levels of government have some responsibility for protecting air quality, and each level (international, federal, state, and regional or local) has specific responsibilities relating to air quality regulation. GHG emissions and GHG regulation are relatively new components of air quality.

10.3.1 International and Federal

GHG emissions are addressed at both the international and federal levels. In 1988, the United Nations and the World Meteorological Organization established the IPCC to assess the scientific, technical, and socioeconomic information relevant to understanding the scientific basis for human-induced climate

change, its potential impacts, and options for adaptation and mitigation. The most recent IPCC reports have emphasized the scientific consensus that real and measurable changes to the climate are occurring, that they are caused by human activity, and that significant adverse impacts on the environment, the economy, and human health and welfare are unavoidable.

On March 21, 1994, the United States joined a number of countries around the world in signing the United Nations Framework Convention on Climate Change. Under the Convention, governments agreed to gather and share information on GHG emissions, national policies, and best practices; launch national strategies for addressing GHG emissions and adapting to expected impacts, including the provision of financial and technological support to developing countries; and cooperate in preparing for adaptation to the impacts of global climate change. In the 2007 court case of Massachusetts et al. v. the Environmental Protection Agency et al., 549 C.S. 497, the United States Supreme Court declared that the EPA does have the ability to regulate GHG emissions. In addition to the national and international efforts noted previously, many local jurisdictions have adopted climate change policies and programs.

Massachusetts v. EPA Endangerment Finding. On April 2, 2007, in Massachusetts v. EPA, the Supreme Court directed the EPA Administrator to determine whether GHG emissions from new motor vehicles threaten public health and welfare. On December 7, 2009, the EPA Administrator signed two distinct findings regarding GHGs under section 202(a) of the Clean Air Act:

- Endangerment Finding: The Administrator finds that the current and projected concentrations of the six key well-mixed greenhouse gases – CO_2, CH_4, N_2O, HFCs [hydrofluorocarbons], PFCs [perfluorocarbons], and SF_6 [sulfur hexafluoride] – in the atmosphere threaten the public health and welfare of current and future generations.
- Cause or Contribute Finding: The Administrator finds that the combined emissions of these well-mixed greenhouse gases from new motor vehicles and new motor vehicle engines contribute to the greenhouse gas pollution which threatens public health and welfare.

The endangerment findings do not themselves impose any requirements on industry or other entities. However, this action was a prerequisite to finalizing the EPA's GHG emission standards for light-duty vehicles, which were jointly proposed by EPA and the Department of Transportation's (DOT's) National Highway Safety Administration on September 15, 2009.

Mandatory GHG Reporting Rule. On March 10, 2009, the EPA proposed a rule that requires mandatory reporting of GHGs from large sources in the United States. On September 22, 2009, the Final Mandatory Reporting of Greenhouse Gases Rule was signed and was published in the Federal Register on October 30, 2009. The rule became effective on December 29, 2009. The rule requires submittal to EPA of accurate and comprehensive emissions data to inform future policy decisions.

EPA requires facilities that emit 25,000 MT or more per year of GHG emissions to submit annual reports. The gases covered by the proposed rule are CO_2, CH_4, N_2O, hydrofluorocarbons, perfluorocarbons, and sulfur hexafluoride, and other fluorinated gases. Landfill operators must collect emission data, calculate GHGs and report to EPA. This law is based on CH_4 generated (not necessarily emitted). Landfill operations include the landfill, gas collection systems, and flares. Report data must include total volumetric flow of LFG collected for destruction via flares, location of flares, annual quantity of CH_4 recovered, description of the gas collection system (manufactured, capacity, number of wells, etc.), and collection efficiency assumptions used in calculations, among other items.

Federal Vehicle Standards. In 2007, the Bush Administration issued Executive Order 13432 titled "Strengthening Federal Environmental, Energy and Transportation Management." The order directed EPA, DOT, and the Department of Energy to establish regulations that reduce GHG emissions from motor

vehicles, non-road vehicles, and non-road engines by 2008. In 2009, the National Highway Traffic Safety Administration (NHTSA) issued a final rule regulating fuel efficiency and GHG emissions from cars and light-duty trucks for model year 2011; in 2010, EPA and NHTSA issued a final rule regulating cars and light-duty trucks for model years 2012– 2016 (NHTSA 2012).

In addition to the regulations applicable to cars and light-duty trucks, in 2011, EPA and NHTSA announced fuel economy and GHG standards for medium- and heavy-duty trucks for model years 2014–2018. The standards for CO_2 emissions and fuel consumption are tailored to three main vehicle categories: combination tractors, heavy-duty pickup trucks and vans, and vocational vehicles. According to EPA, this regulatory program will reduce GHG emissions and fuel consumption for the affected vehicles by 6 to 23 percent over the 2010 baselines.

The Corporate Average Fuel Economy standards are standards that have been adopted by DOT and EPA. These standards are therefore federal standards and apply to vehicles throughout the United States.

The final phase two program promotes a new generation of cleaner, more fuel-efficient trucks by encouraging the development and deployment of new and advanced cost-effective technologies (NHTSA 2016). New vehicle and engine performance standards would cover model years 2018–2027. The federal law is expected to lower CO_2 emissions by approximately 1.1 billion MT over the lifetime of vehicles sold under the program.

Municipal Solid Waste Landfills: New Source Performance Standards (NSPS). On March 12, 1996, EPA promulgated a regulation entitled "Standards of Performance for Stationary Sources and Guidelines for Control of Existing Sources: MSW Landfills." It includes both NSPS that regulate emissions from new landfills and Emission Guidelines that regulate emissions from existing landfills. The proposed project is subject to an existing NSPS regulation, 40 CFR Part 60 Subpart WWW (Standards of Performance for Municipal Waste Landfills).

On August 29, 2016, EPA finalized a new subpart under section 111(b) of the Clean Air Act for new, modified, and reconstructed municipal solid waste (MSW) landfills under 40 CFR Part 60, Subpart XXX (81 FR 59332) effective October 28, 2016. The new NSPS applies to landfills built after July 17, 2014. Local air districts will implement NSPS provisions under their stationary source authority. The goal is to reduce CH_4 emissions from MSW landfills.

EPA also issued updated emission guidelines for reducing emissions from existing MSW landfills under section 111(d) of the Clean Air Act. These guidelines also became effective in October 2016. Although a stay was placed on the federal standards in 2017, CARB submitted a plan to EPA on May 30, 2017, demonstrating that California landfills would be regulated by these standards. On October 30, 2018, EPA issued a proposed rule to align state plan timing requirements with those proposed in the Affordable Clean Energy rule. California has committed to working with EPA during the stay to confirm the Emissions Guidelines are protective of public health and the environment.

10.3.2 State

Executive Order (EO) S-3-05, signed by Governor Arnold Schwarzenegger in 2005, proclaims that California is vulnerable to the impacts of climate change. It declares that increased temperatures could reduce the Sierra Nevada snowpack, further exacerbate California's air quality problems, and potentially cause a rise in sea levels. To combat those concerns, the EO established total GHG emission targets for the state. Specifically, emissions are to be reduced to the 2000 level by 2010, to the 1990 level by 2020, and to 80 percent below the 1990 level by 2050.

Assembly Bill (AB) 32, the California Global Warming Solutions Act of 2006, establishes regulatory, reporting, and market mechanisms to achieve quantifiable reductions in GHG emissions and a cap on statewide GHG emissions. AB 32 requires that statewide GHG emissions be reduced to 1990 levels by 2020. In December 2008, CARB adopted its first version of its Climate Change Scoping Plan, which contained the main strategies California will implement to achieve the mandate of AB 32 to reduce statewide GHG emissions to 1990 levels by 2020. In May 2014, CARB released and subsequently adopted the First Update to the Climate Change Scoping Plan to identify the next steps in reaching the goals of AB 32 and evaluate the progress made between 2000 and 2012 (CARB 2014b). After releasing multiple versions of proposed updates in 2017, CARB adopted the final version, titled *California's 2017 Climate Change Scoping Plan* (2017 Scoping Plan) in December. The 2017 Scoping Plan indicates that California is on track to achieve the 2020 statewide GHG target mandated by AB 32. It also lays out the framework for achieving the SB 32 mandate to reduce statewide GHG emissions to at least 40 percent below 1990 levels by the end of 2030 (CARB 2017). The 2017 Scoping Plan identifies the GHG reductions needed by each emissions sector.

The 2017 Scoping Plan also identifies how GHGs associated with proposed projects could be evaluated under CEQA. Specifically, it states that achieving "no net increase" in GHG emissions is an appropriate overall objective of projects evaluated under CEQA if conformity with an applicable local GHG reduction plan cannot be demonstrated. CARB recognizes that it may not be appropriate or feasible for every development project to mitigate its GHG emissions to zero and that an increase in GHG emissions because of a project may not necessarily imply a substantial contribution to the cumulatively significant environmental impact of climate change (CARB 2017).

On October 20, 2011, as part of its ongoing implementation of AB 32, CARB adopted regulations to implement a cap-and-trade program for GHG emissions (CARB 2011). CARB has specifically exempted, from any compliance obligation, a series of listed fuel types that have been demonstrated to be carbon neutral or carbon negative. Biomethane and biogas from landfills is a listed exempt fuel type.

Senate Bill (SB) 97, CEQA: Greenhouse Gas Emissions, enacted in 2007, amends the CEQA statute to clearly establish that GHG emissions and the effects of GHG emissions are appropriate subjects for CEQA analysis. It directs the Governor's Office of Planning and Research (OPR) to develop draft CEQA Guidelines "for the mitigation of greenhouse gas emissions or the effects of greenhouse gas emissions" by July 1, 2009, and directs the Resources Agency to certify and adopt the CEQA Guidelines by January 1, 2010.

OPR published a technical advisory on CEQA and Climate Change on June 19, 2008. The guidance did not include a suggested threshold. OPR does recommend that CEQA analyses identify GHG emissions, determine significance, and mitigate impacts. In April 2009, the OPR published its proposed revisions to CEQA to address GHG emissions. The amendments to CEQA indicate the following:

- Climate action plans and other GHG reduction plans can be used to determine whether a project has significant impacts, based on its compliance with the plan.
- Local governments are encouraged to quantify the GHG emissions of proposed projects, noting that they have the freedom to select the models and methodologies that best meet their needs and circumstances. OPR does not set or dictate specific thresholds of significance. Consistent with existing CEQA Guidelines, OPR encourages local governments to develop and publish their own thresholds of significance for GHG impacts assessment.
- OPR is clear to state that "to qualify as mitigation, specific measures from an existing plan must be identified and incorporated into the project; general compliance with a plan, by itself, is not mitigation."

- Environmental Impact Reports (EIRs) must specifically consider a project's energy use and energy efficiency potential.

On July 3, 2009, CNRA published proposed regulatory amendments based on OPR's proposed revisions to CEQA to address GHG emissions. On December 28, 2018, The California Office of Administrative Law completed the rulemaking process and approved amendments and additions to the CEQA Guidelines contained in Title 14 of the CCR, beginning with Section 15000.

SB 375, signed by Governor Schwarzenegger in September 2008, aligns regional transportation planning efforts, regional GHG emission reduction targets, and land use and housing allocation. SB 375 requires metropolitan planning organizations (MPOs) to adopt a Sustainable Communities Strategy (SCS) or Alternative Planning Strategy, showing prescribed land-use allocation in each MPO's Regional Transportation Plan. CARB, in consultation with the MPOs, is to provide each affected region with reduction targets for GHGs emitted by passenger cars and light trucks in their respective regions for 2020 and 2035. The Sacramento Area Council of Governments (SACOG) serves as the MPO for Sacramento, Placer, El Dorado, Yuba, Sutter, and Yolo Counties, excluding those lands located in the Lake Tahoe Basin. SACOG adopted its Metropolitan Transportation Plan/Sustainable Communities Strategy (MTP/SCS) 2036 in 2012 and completed an update adopted on February 18, 2016 (SACOG 2016). In 2013, SACOG was tasked by CARB to achieve a 7 percent per capita reduction compared with 2012 emissions by 2020 and a 16 percent per capita reduction by 2035, which CARB confirmed the region would achieve by implementing its SCS. In June 2017, CARB released the proposed update for the SB 375 targets, tasking SACOG to achieve a 7 percent and a 19 percent per capita reduction by 2020 and 2035, respectively (CARB 2017). At the time of writing this Draft EIR (DEIR), the target update had not been approved by CARB.

SB 743 of 2013 changed the way that public agencies evaluate the transportation impacts of projects under CEQA. Revisions to the State CEQA Guidelines would establish new criteria for determining the significance of a project's transportation impacts to more appropriately balance the needs of congestion management with statewide goals related to infill development, promotion of public health through active transportation, and reduction of GHG emissions. OPR was tasked with developing potential metrics to measure transportation impacts and replace the use of delay and level of service. More detail about SB 743 is provided in the regulatory setting of Chapter 16, Transportation.

On April 20, 2015, Governor Brown signed **EO B-30-15** to establish a California GHG reduction target of 40 percent below 1990 levels by 2030. The governor's EO aligns California's GHG reduction targets with those of leading international governments, such as the 28-nation European Union, which adopted the same target in October 2014. California is on track to meet or exceed the target of reducing GHG emissions to 1990 levels by 2020, as established in the California Global Warming Solutions Act of 2006 (AB 32, discussed previously). California's new emission reduction target of 40 percent below 1990 levels by 2030 will make it possible to reach the ultimate goal of reducing emissions 80 percent below 1990 levels by 2050. This is in line with the scientifically established levels needed in the United States to limit global warming below 2 degrees Celsius, the warming threshold at which major climate disruptions are projected, such as super droughts and rising sea levels.

In August 2016, Governor Brown signed **SB 32 and AB 197**, which serve to extend California's GHG reduction programs beyond 2020. SB 32 amended the *Health and Safety Code* to include Section 38566, which contains language to authorize CARB to achieve a statewide GHG emission reduction of at least 40 percent below 1990 levels by no later than December 31, 2030. SB 32 codified the targets established by EO B-30-15 for 2030, which set the next interim step in the state's continuing efforts to pursue the long-term target expressed in EOs S-3-05 and B-30-15 of 80 percent below 1990 emissions levels by 2050.

In January 2012, CARB approved the **Advanced Clean Cars program**, which combines the control of GHG emissions and criteria air pollutants, as well as requirements for greater numbers of zero-emission vehicles, into a single package of standards for vehicle model years 2017–2025. The new rules strengthen the GHG standard for 2017 models and beyond. This will be achieved through existing technologies, the use of stronger and lighter materials, and more efficient drivetrains and engines. The program's zero-emission vehicle regulation requires battery, fuel cell, or plug-in hybrid electric vehicles to account for up to 15 percent of California's new vehicle sales by 2025. The program also includes a clean fuels outlet regulation designed to support the commercialization of zero-emission hydrogen fuel cell vehicles planned by vehicle manufacturers by 2015 by requiring increased numbers of hydrogen fueling stations throughout the state. The number of stations will grow as vehicle manufacturers sell more fuel cell vehicles (Placer County 2018). By 2025, when the rules will be fully implemented, new cars and light trucks will emit 40 percent fewer GHG emissions and 75 percent fewer smog-forming emissions than the average car sold in 2012 (CARB 2021).

SB X1-2, the California Renewable Energy Resources Act of 2011, requires all California utilities to generate 33 percent of their electricity from renewables by 2020. SB X1-2 sets a three-stage compliance period requiring all California utilities, including independently owned utilities, energy service providers, and community choice aggregators, to generate 20 percent of their electricity from renewables by December 31, 2013; 25 percent by December 31, 2016; and 33 percent by December 31, 2020. SB X1-2 also requires the renewable electricity standard to be met increasingly with renewable energy that is supplied to the California grid from sources within, or directly proximate to, California. SB X1-2 mandates that renewables from these sources make up at least 50 percent of the total renewable energy for the 2011–2013 compliance period, at least 65 percent for the 2014–2016 compliance period, and at least 75 percent for 2016 and beyond. In October 2015, SB 350 was signed by Governor Brown, which requires retail sellers and publicly owned utilities to procure 50 percent of their electricity from renewable resources by 2030.

SB 100 – The 100 Percent Clean Energy Act of 2018 calls for 100 percent of total retail sales of electricity in California to originate from eligible renewable energy resources and zero-carbon resources by December 31, 2045. The intention was to extend and expand policies of the California Renewables Portfolio Standard Program, and to codify the policies established pursuant to Section 454.53 of the *Public Utilities Code*, and that both be included in long-term planning. A benefit of this Act includes meeting the state's climate change goals by reducing emissions of GHGs associated with electrical generation.

EO B-55-18, signed by Governor Brown on September 10, 2018, calls for a new statewide goal to achieve carbon neutrality as soon as possible, and no later than 2045, and to maintain net negative emissions thereafter. This goal is in addition to the existing statewide targets of reducing GHG emissions.

Buildings in California are required to comply with **California's Energy Efficiency Standards for Residential and Nonresidential Buildings** established by California Energy Commission regarding energy conservation standards and found in **Title 24, Part 6** of the CCR. These standards were first adopted in 1978 in response to a legislative mandate to reduce California's energy consumption and are updated on an approximately 3-year cycle to allow consideration and possible incorporation of new energy-efficient technologies and methods. All buildings for which an application for a building permit is submitted on or after January 1, 2020, must follow the 2019 standards (CEC 2019). Energy-efficient buildings require less electricity; therefore, increased energy efficiency reduces fossil fuel consumption and decreases GHG emissions.

In January 2007, **EO S-01-07** established a **Low Carbon Fuel Standard (LCFS)**. The EO calls for a statewide goal to be established to reduce the carbon intensity of California's transportation fuels by at least 10 percent by 2020 and for an LCFS for transportation fuels to be established for California. The LCFS applies

to all refiners, blenders, producers, or importers (providers) of transportation fuels in California. The LCFS will be measured on a full fuels-cycle basis and may be met through market-based methods by which providers exceeding the performance required by an LCFS will receive credits that may be applied to future obligations or traded to providers not meeting the LCFS. In June 2007, CARB adopted the LCFS as a Discrete Early Action item under AB 32, and in April 2009, CARB approved the new rules and carbon intensity reference values with new regulatory requirements that took effect in January 2011. The standards require providers of transportation fuels to report on the mix of fuels that they provide and demonstrate that they meet the LCFS intensity standards annually. This is accomplished by verifying that the number of "credits" earned by providing fuels with a lower carbon intensity than the established baseline (or obtained from another party) is equal to or greater than the "deficits" earned from selling higher intensity fuels.

In December 2011, the U.S. District Court for the Eastern District of California issued three rulings against the LCFS, including a requirement for CARB to abstain from enforcing the LCFS. In April 2012, the Ninth Circuit granted CARB's motion for a stay of the injunction while it continued to consider CARB's appeal to the lower court's decision. Consequently, CARB readopted the LCFS regulation in September 2015, and the changes went into effect on January 1, 2016. The program establishes a strong framework to promote the low-carbon fuel adoption necessary to achieve the governor's 2030 and 2050 GHG goals.

SB 1383 (2016) **Short-Lived Climate Pollutants**: Methane Emissions: Dairy and Livestock: Organic Waste: Landfills: (1) Codifies various aspects of the CARB's Short-Lived Climate Pollutant Plan, (2) requires the California Energy Commission to develop recommendations to increase the use of renewable gas, (3) sets organics disposal reduction targets, and (4) provides CalRecycle the regulatory authority required to achieve the waste sector aspects of the Short-Lived Climate Pollutant Plan. The California Department of Resources Recycling and Recovery (CalRecycle) oversees programs to promote recycling and reduce the amount of solid waste sent to landfills, including organic waste recycling under SB 1383. SB 1383 and the ensuing regulations establish Statewide goals to reduce California's disposal of organic waste 50 percent by 2020 and 75 percent by 2025 and require that at least 20 percent of currently disposed edible food must be recovered for human consumption by 2025.

CARB staff worked jointly with EPA and NHTSA on the Phase 2 federal GHG emission standards for medium- and heavy-duty vehicles. These federal Phase 2 standards were built on the improvements in engine and vehicle efficiency required by the Phase 1 emission standards and represent a significant opportunity to achieve further GHG reductions for 2018 and later model year heavy-duty vehicles, including trailers. In the California Phase 2 standards, California is aligning with the federal Phase 2 standards in structure, timing, and stringency, but with some minor California differences.

CARB's **Regulation to Reduce Methane Emissions from Municipal Solid Waste Landfills** requires the installation and operation of gas collection and control systems at active, inactive, and closed MSW landfills having 450,000 tons of waste-in-place or greater that received waste after January 1, 1977. The regulation contains performance standards for the gas collection and control system and specifies monitoring requirements so that the system is maintained and operated in a manner that minimizes CH_4 emissions. The regulation includes a CH_4 leak standard for gas collection and control system components, a monitoring requirement for wellheads, CH_4 destruction efficiency requirements for most control devices, surface CH_4 emission standards, and reporting requirements.

The regulation establishes a 500 parts per million by volume (ppmv) CH_4 instantaneous surface monitoring standard and a 25 ppmv CH_4 integrated surface monitoring standard to adequately control CH_4 emissions (§ 95465). In addition, landfills that are currently subject to local or federal landfill rules will need to continue complying with the 500 ppmv instantaneous standard commonly found in those rules.

AB 75 was passed in 1999 and mandates state agencies to develop and implement integrated waste management plans to reduce GHG emissions related to solid waste disposal and diversion (recycling). Since 2004, the bill has required diversion of at least 50 percent of the solid waste from landfills and submission to the California Integrated Waste Management Board of an annual report describing achieved diversion rates.

In 2007, **SB 1016** changed the diversion reporting from a percentage calculation to a target of daily pounds per capita disposal based on each jurisdiction's average waste generation from 2003 through 2006. A comparison between the reported annual per capita disposal rate to the 50 percent per capita disposal target will be useful for indicating progress.

AB 341 Solid Waste Diversion increased previous California recycling requirements (AB 939, Solid Waste Management, Source Reduction, Recycling, Composting, and Market Development) from 50 percent diversion as a statewide target to a 75 percent statewide target for diversion of solid waste from landfills by January 2020. Businesses and multifamily residential dwelling of five units or more must arrange for recycling services. Each jurisdiction must implement a commercial solid waste recycling program that consists of education, outreach, and monitoring of businesses.

AB 1826 Mandatory Organics Recycling, enacted in 2014, requires businesses to recycle their organic wastes. Organic wastes include primarily green waste and food waste, and the amount of wastes to be recycled will increase over time. If CalRecycle determines that the statewide disposal of organic waste in 2020 has not been reduced by 50 percent of the level of disposal during 2014, the organic recycling requirements on businesses will expand to cover businesses that generate 2 cubic yards or more of commercial solid waste per week, and certain exemptions may no longer be available.

AB 1594 Waste Management, enacted in 2014, states that green waste used as alternate daily landfill cover (ADC) will no longer receive recycling credit beginning in 2020. Currently, approximately about 300,000 tons of green waste is used as ADC in the state annually. To continue receiving recycling credit, this material will need to be sent to green waste processing and composting or other organics processing facility. Reductions in disposal tonnage are anticipated.

10.3.3 Local

Placer County Air Pollution Control District

In October 2016, the PCAPCD Board of Directors adopted the Review of Land Use Projects under CEQA Policy document, establishing thresholds of significance for GHG emissions and criteria air pollutants for projects under CEQA review in the County. The document serves as guidance for lead agencies when reviewing GHG impacts associated with a project. In the development of these thresholds, the PCAPCD Board considered statewide regulations to accomplish statewide emissions reduction targets for GHGs. PCAPCD has prepared a CEQA Thresholds of Significance Justification Report, which contains the rationale, modeling analyses, and factual data to justify the thresholds of significance that have been established (PCAPCD 2016a).

Placer County Sustainability Plan and Placer County General Plan

The WPWMA is a Joint Powers Authority (JPA) composed of Placer County and the cities of Lincoln, Rocklin, and Roseville to own and operate a regional recycling facility and sanitary landfill. As a JPA, the WPWMA considers local regulations and consults with local agencies, but County and city regulations, goals, and policies are not applicable, because the County and cities do not have jurisdiction over the

proposed project. Accordingly, the following discussion of local goals and policies from the Placer County Sustainability Plan and the Placer County General Plan is provided for informational purposes only.

The Placer County Sustainability Plan, adopted on January 28, 2020, includes policies related to addressing GHG emissions and climate change in Placer County (Placer County 2020). Solid waste-related GHG emission reduction measures and goals are for the most part voluntary and dependent on available funding, other than mandatory compliance with state laws. They include the following:

- Work with the WPWMA to get to 90 percent CH_4 capture by 2030, with an aspirational goal of 100 percent CH_4 capture
- Comply with state laws and regulations – AB 876, SB 1383, AB 1826, AB 939
- Explore feasibility to convert facility vehicles and haul trucks to alternative (low carbon) fuels and electricity
- Get grants to study CH_4 capture at landfills
- Educate the public on waste reduction and reuse

The Placer County General Plan, which was originally adopted in 1994 and last updated in 2013, includes the following policies related to addressing GHG emissions and climate change in Placer County (Placer County 2013):

- Policy G-2: The County shall promote land-use patterns that encourage energy efficiency, to the extent feasible, and encourage efficient energy use in new development, including but not limited to access to non-auto transit, use of traffic demand management, and water-efficient landscaping.
- Policy G-4: The County shall encourage participation in weatherization and energy efficiency programs sponsored by utility companies.
- Policy 6. F.5: The County shall encourage project proponents to consult early in the planning process with the County regarding the applicability of Countywide indirect and areawide source programs and transportation control measures (TCM) programs. Project review shall also address energy-efficient buildings and site designs and proper storage, use, and disposal of hazardous materials.

10.4 Impact Analysis and Mitigation Measures

The analysis, GHG-related impacts, and mitigation for some of the planned land development in the proposed project area has been generally described in prior studies for the SAP and PCCP EIRs (Placer County 2018, 2019, 2020). Parts of the following discussion of the standards of significance, GHG impact analysis, results, and mitigation for the proposed project have been adapted from these prior EIRs, with updates of pertinent information for the proposed project.

10.4.1 Thresholds of Significance

The issue of global climate change is inherently a cumulative issue, as the GHG emissions of individual projects contribute regionally to the effect on global climate change. Thus, the climate change impact resulting from the development of land uses and infrastructure under the proposed project under Plan Concept 1 and Plan Concept 2 is addressed as a project impact and as a cumulative impact.

State CEQA Guidelines Section 15064 and relevant portions of Appendix G recommend that a lead agency consider a project's consistency with relevant, adopted plans and discuss any inconsistencies with applicable regional plans, including plans to reduce GHG emissions. Under Appendix G of the State CEQA

Guidelines, a project will consider the following factors, among others, when determining the significance of impacts from GHG emissions on the environment:

a) Does the project generate GHG emissions, either directly or indirectly, that may have a significant impact on the environment?

b) Do project emissions exceed a threshold of significance that the lead agency determines applies to the project?

c) Does the project conflict with an applicable plan, policy, or regulation adopted for the purpose of reducing the emissions of greenhouse gases?

The Appendix G checklist questions are used as the thresholds of significance when evaluating the environmental effects of the proposed project's GHG emissions. In applying these thresholds, reference is also made to CEQA Guidelines Section 15064.4(b)(1)-(3).

In California, some counties, cities, and air districts have developed guidance and thresholds for determining the significance of GHG emissions that occur within their jurisdiction. The WPWMA is the CEQA lead agency for the proposed project and is therefore responsible for determining whether an impact would be considered significant. At the time of writing this DEIR, the WPWMA does not have an adopted Climate Action Plan consistent with State CEQA Guidelines Section 15183.5(b).

For completeness purposes, both biogenic and nonbiogenic GHG emissions[36] have been calculated for project-related operations. CO_2 emissions from fossil fuel combustion are a major nonbiogenic contributor to climate change. Some biogenic GHG emissions are returned to the environment through landfill processes. LFG combustion in the flares and cogeneration engines would produce unchanged biogenic CO_2 emissions, along with converted nonbiogenic CH_4 and N_2O emissions. Use of electricity generated in the LFG-to-energy plant would avoid the use of limited, nonrenewable resources such as coal and oil and the related biogenic emissions.

Project-related buildings and equipment, such as the LFG collection system, have been assumed to use electricity purchased from the grid. The purchased electricity is generated from a variety of sources, including fossil fuels. The GHG emissions associated with the increased generation and use of electricity by the proposed project have been quantified. Some of the LFG collected by the facility is used to generate electricity at the LFG-to-energy plant.[37] GHG emissions from electricity use are calculated using emission factors for electricity generation from EPA's eGRID database for Placer County. Information on electricity use in the 2018 baseline year and an assumed annual increase to account for operational increases caused by waste growth were used to estimate electricity use at buildout.

To evaluate the impacts of projects on global climate change, PCAPCD has established thresholds of significance for land-use development projects that occur within its jurisdiction (PCAPCD 2017). Thresholds used to determine significance are from PCAPCD's policy document titled "Review of Land Use Projects under CEQA" and are shown below (PCAPCD 2016b).

[36] EPA has identified biogenic sources (that is, sources not related to energy production and consumption) as those with GHG emissions that are generated during the decomposition of biologically based material, such as landfills, manure management, wastewater treatment, livestock respiration, fermentation processes, and combustion of biogas not resulting in energy production (for example, flaring of collected LFG). Decomposition of organic material derived from biomass sources (for example, crops and wood) is the primary source of CO_2 released from waste (IPCC 2013). Some climate models do not include biogenic CO_2 emissions from the decomposition of organic material, because decomposition is part of the natural carbon cycle.

[37] The electricity generated at the LFG-to-energy plant is considered renewable, and the CO_2 emissions are biogenic because they are LFG-derived. GHG benefits of this power generation are conveyed with the renewable energy credits, which are sold by the LFG-to-energy facility and cannot be double-counted as a benefit of the proposed project. Therefore, in accordance with the relevant accounting standards, this analysis conservatively quantifies GHG impacts of all power consumed onsite as if it were purchased from the grid.

PCAPCD's policy document titled "California Environmental Quality Act Thresholds of Significance – Justification Report" notes the following in describing how each of the thresholds should be applied (PCAPCD 2016a):

1) A bright-line threshold of 10,000 metric tons of CO_2 equivalent per year (MT CO_2e/year) for the construction and operational phases of land-use projects as well as stationary source projects.
2) An efficiency matrix for the operational phase of land-use development projects when emissions exceed the de minimis level.
3) A de minimis level for the operational phases of 1,100 MT CO_2e/year.

GHG emissions from projects that exceed 10,000 MT CO_2e/year would be deemed to have a cumulatively considerable contribution to global climate change. The de minimis level for the operational phases of 1,100 MT CO_2e/year represents an emissions level that can be considered as less than cumulatively considerable and be excluded from the further GHG impact analysis. To evaluate the significance of potential impacts associated with GHG emissions, the total unmitigated project-related GHG emissions were compared with the PCAPCD GHG significance thresholds (PCAPCD 2017). If the estimated GHG emissions exceed the thresholds, feasible mitigation measures for the GHG emissions are required to be evaluated to reduce the proposed project's GHG impacts.

Additionally, CEQA requires that the proposed project evaluate the potential for conflicts with any applicable plans, policies, or regulations adopted for the purpose of reducing GHG emissions. To evaluate the significance of potential project-related impacts associated with this CEQA criterion, the proposed project has been assessed for consistency with the following:

- Applicable California laws, plans, policies, and regulations (for example, AB 32, AB 876, SB 1383, AB 1826, AB 939)
- Placer County Sustainability Plan (Placer County 2020), including the solid waste-related GHG emission reduction measures and goals in that plan

10.4.2 Impacts and Mitigation Measures

This section describes the effects related to GHG emissions and global climate change associated with the two plan concepts, mitigation measures for identified significant impacts, and the level of impact significance following implementation of the identified mitigations.

IMPACT 10-1	Construction and Operational GHG Emissions. Annual GHG emissions estimated for the development and implementation of solid waste elements, complementary elements, and supporting elements under the proposed project would exceed PCAPCD's recommended GHG significance thresholds, including the bright-line threshold of 10,000 MT CO_2e/year for the construction and operational phases of land-use projects. GHG emissions from construction alone would not exceed PCAPCD's recommended bright-line threshold of 10,000 MT CO_2e/year, but estimated operational GHG emissions increases would exceed the threshold. Exceedance of the PCAPCD threshold of 10,000 MT CO_2e/year indicates that GHG emissions associated with the proposed project would result in a cumulatively considerable contribution to global climate change. This impact would be **significant**.

Plan Concept 1

Construction-related activities for Plan Concept 1 would result in nonbiogenic GHG emissions (CO_2, CH_4 and N_2O) from fuel combustion in on-road and off-road vehicles used for construction, upgrade, expansion, and replacement of onsite facilities and construction of new landfill modules. Activities associated with construction of the proposed facilities would include demolition, site preparation, grading, excavation, road construction, foundation construction, and building construction. Landfill module construction would include excavation, placement of liner materials, and partial module closure. Typical construction activities would require fuel combustion in forklifts, cranes, pickup and fuel trucks, loaders, backhoes, excavators, dozers, tractors, graders, scrapers, pavers, rollers, paving equipment, welders, bore and drill rigs, cement and mortar mixers, off-road haul trucks, generator sets, as well as other equipment as necessary. On-road haul trucks would be used to deliver equipment, materials, and supplies, and on-road passenger vehicles would be used for worker commute trips. The annual GHG emissions increases estimated for the construction of the proposed project under Plan Concept 1 are presented in Table 10-2.

Operation of the proposed solid waste elements, complementary elements, and supporting elements would result in GHG emissions from worker commute trips, haul truck trips (commercial and self-haul), off-road equipment, waste receipt, recovery, and disposal operations, composting, generators, LFG-to-energy plant operation, LFG flares, fugitive LFG, electricity use, and compatible manufacturing.[38] For example, fuel combustion in on-road and off-road vehicles and stationary engines would result in nonbiogenic GHG emissions (CO_2, CH_4, and N_2O). LFG generation and flaring and composting would result in biogenic emissions (CO_2, CH_4). The emissions benefits associated with the proposed improvements in organic waste composting technology (for example, transition from windrows to ASP composting) for future waste streams have been estimated; the proposed project would result in a net benefit for GHG emissions from composting operations when compared with existing operations. The net annual GHG emissions increases estimated for operation of the proposed project under Plan Concept 1 are presented in Table 10-3.

The emission values presented in Tables 10-2 and 10-3 represent construction and operation of project elements under Plan Concept 1 with implementation of BMPs and project design measures from Table 10-1, but no additional mitigation. For specific assumptions and modeling inputs, refer to Appendix C.2.

[38] Emission calculations for this analysis of project-related construction and operational GHG emissions assumed construction of 300,000 sq feet of building space and 300,000 sq feet of parking and roads for complementary elements (e.g., compatible manufacturing). This analysis did not evaluate the timing or impacts of full buildout of complementary/programmatic elements (1,900,000 sq feet of building space and associated parking and roads), nor does it provide project-level analysis of the air quality impacts of construction of specific types of industrial activities. Additional project-level analysis and air permits from PCAPCD may be required.

As shown in Table 10-3, operation of the proposed project, under Plan Concept 1, would result in an estimated increase of 33,841 MT CO_2e per year, relative to 2018 existing conditions. Approximately 37 percent of the proposed project's estimated annual GHG emissions from operation are associated with fugitive LFG; consequently, project design measures to increase the efficiency of the LFG capture system would be prioritized. Other project design measures included in the proposed project would reduce the project's GHG emissions through use of Tier 4 engines, ASP technology for the composting facility, and Title 24 building standards on additional buildings being constructed.

GHG emissions from construction alone would not exceed PCAPCD's recommended bright-line threshold of 10,000 MT CO_2e/year for the construction and operational phases of land-use projects. Operational GHG emissions estimated for the development and implementation of solid waste elements, complementary elements, and supporting elements under the proposed project would exceed the bright-line threshold of 10,000 MT CO_2e/year. Exceedance of the PCAPCD threshold indicates that GHG emissions associated with the proposed project would result in a cumulatively considerable contribution to global climate change.

Table 10-2. Summary of Maximum Annual Construction Greenhouse Gas Emissions for Plan Concept 1

Maximum Annual Emissions (MT/yr)				
Construction Year	**CO_2**	**CH_4**	**N_2O**	**CO_2e**
2024	758	0.08	0.05	773
2025	748	0.14	0.04	763
2028	1,405	0.44	0.00	1,417
2029	2,166	0.51	0.02	2,186
2033	1,273	0.05	0.01	1,277
PCAPCD Threshold 10,000 MT CO_2e				**10,000**
Assumed Construction of Complementary Elements in any given year[b]	326	0.01	0.000	327

[b] Emission calculations assumed construction of 300,000 square feet of building space and 300,000 square feet of parking and roads for complementary elements over 5 years, with emissions assumed to occur equally during each year in the 5-year period. This analysis did not evaluate the impacts of full buildout of complementary and programmatic elements (1,900,000 square feet of building space and associated parking and roads), nor does it provide project-level analysis of the air quality impacts of construction of specific types of industrial activities.

Table 10-3. Summary of Maximum Annual Operational Greenhouse Gas Emissions for Plan Concept 1

Maximum Annual Emissions (MT/yr)					
Source	**Biogenic CO_2**	**Nonbiogenic CO_2**	**CH_4**	**N_2O**	**Total CO_2e**
Onsite Vehicles	-	441	< 0.01	0.05	454
Offsite Vehicles	-	1,413	0.01	0.16	1,457
Off-road Equipment	-	5,166	0.16	0.07	5,190
Composting Operations	-398	-	-8.05	-0.60	-784
Gasoline Generators	-	5.2	< 0.01	< 0.01	5.2
LFG-to-energy Engines[a]	7,641	-	0.47	0.09	7,679
Fugitive LFG	1,107	-	404	-	12,407
Flares	2,736	1,480	5.45	0.02	4,374
Electricity	-	989	0.16	0.02	999
Complementary Elements[b]	38.2	1,920	3.16	0.06	2,060
Total	**11,124**	**11,414**	**405**	**-0.13**	**33,841**
PCAPCD Threshold 10,000 MT CO_2e/yr					**10,000**
Exceeds Threshold?					**Yes**

[a] Currently the LFG-to-energy facility and all required air permits are held by a private operator. Other emission sources may also be owned and operated by others.

[b] Emission calculations assumed operation of 300,000 square feet of building space and 300,000 square feet of parking and roads for complementary elements. This analysis did not evaluate the impacts of full buildout of complementary and programmatic elements (1,900,000 square feet of building space and associated parking and roads), nor does it provide project-level analysis of the air quality impacts of construction of specific types of industrial activities.

Note:

Negative values indicate a net benefit. Values in **bold** type indicate an exceedance of the applicable PCAPCD Operational Threshold of Significance.

Plan Concept 2

As described in Chapter 3, Project Description, the primary differences between Plan Concept 1 and Plan Concept 2 are related to where various facilities would be located on WPWMA's property and when various facilities would be developed. The annual GHG emissions increases estimated for the construction of the proposed project under Plan Concept 2 are presented in Table 10-4, and the net annual GHG emissions increases estimated for operation are presented in Table 10-5. Like the values presented in Tables 10-2 and 10-3 for Plan Concept 1, the emission values presented in Tables 10-4 and 10-5 represent construction and operation of project elements with implementation of BMPs and project design measures, but no additional mitigation. For specific assumptions and modeling inputs, refer to Appendix C.2.

These differences would not change the conclusions regarding GHG emissions identified for Plan Concept 1, including a finding of significance for construction and operational GHG emissions. As such, impacts related to construction and operational GHG emissions for implementation of Plan Concept 2 would be the same as described for Plan Concept 1.

Table 10-4. Summary of Maximum Annual Construction Greenhouse Gas Emissions for Plan Concept 2

Maximum Annual Emissions (MT/yr)				
Construction Year	**CO_2**	**CH_4**	**N_2O**	**CO_2e**
2024	1,652	0.48	0.01	1,669
2026	1,273	0.27	0.04	1,290
2031	1,402	0.44	0.00	1,415
2032	2,537	0.09	0.02	2,546
PCAPCD Threshold 10,000 MT CO_2e/yr				**10,000**
Assumed Construction of Complementary Elements in any given year[a]	326	0.01	0.000	327

[a] Emission calculations assumed construction of 300,000 square feet of building space and 300,000 square feet of parking and roads for complementary elements over 5 years, with emissions assumed to occur equally during each year in the 5-year period. This analysis did not evaluate the impacts of full buildout of complementary and programmatic elements (1,900,000 square feet of building space and associated parking and roads), nor does it provide project-level analysis of the air quality impacts of construction of specific types of industrial activities.

Table 10-5. Summary of Maximum Annual Operational Greenhouse Gas Emissions for Plan Concept 2

Maximum Annual Emissions (MT/yr)					
Source	**Biogenic CO_2**	**Nonbiogenic CO_2**	**CH_4**	**N_2O**	**Total CO_2e**
Onsite Vehicles	-	255	< 0.01	0.03	262
Offsite Vehicles	-	1,413	0.01	0.16	1,457
Off-road Equipment	-	5,166	0.16	0.07	5,190
Composting Operations	-398	-	-8.05	-0.60	-784
Gasoline Generators	-	5.2	< 0.00	< 0.00	5.2
LFG-to-energy Engines[a]	7,641	-	0.47	0.09	7,679
Fugitive LFG	1,163	-	424	-	13,029
Flares	3,143	1,700	6.26	0.02	5,024
Electricity	-	989	0.16	0.02	999
Complementary Elements[b]	38.2	1,920	3.16	0.06	2,060
Total	**11,587**	**11,448**	**426**	**-0.15**	**34,921**
PCAPCD Threshold 10,000 MT CO_2e/yr					**10,000**
Exceeds Threshold?					**Yes**

[a] Currently the LFG-to-energy facility and all required air permits are held by a private operator. Other emission sources may also be owned and operated by others.

[b] Emission calculations assumed operation of 300,000 square feet of building space and 300,000 square feet of parking and roads for complementary elements. This analysis did not evaluate the impacts of full buildout of complementary and programmatic elements (1,900,000 square feet of building space and associated parking and roads), nor does it provide project-level analysis of the air quality impacts of construction of specific types of industrial activities.

Note:

Negative values indicate a net benefit. Values in **bold** type indicate an exceedance of the applicable PCAPCD Operational Threshold of Significance.

Mitigation Measure 10-1: Fund GHG Emissions Reductions through an Offsite Mitigation Fee Program.

WPWMA and their operation contractor(s) shall document their capability and commitment to implement the GHG BMPs and project design measures[39] identified in Table 10-1 as part of their contracts and plan submittals. To further mitigate the significant GHG impacts identified for the proposed project, WPWMA shall participate in one of the following voluntary offsite mitigation programs:

- Establish and fund an offsite mitigation project to result in a GHG emission reduction equivalent to the total amount of emissions estimated to exceed the PCAPCD significance threshold over a single year. Developing an offsite mitigation program in western Placer County shall be coordinated with PCAPCD.

[39] Note: Applicable measures from PCAPCD's recommended GHG emission mitigation measures (PCAPCD 2017) are incorporated in the proposed project as project design measures. For the list of BMPs and project design measures incorporated in the proposed project, please see the list of measures in Table 10-1, Current Emission Reduction Measures and Best Management Practices Incorporated as Project Design Measures.

Emission reductions achieved through the offsite mitigation program must be real and quantifiable, as verified by PCAPCD.

- Participate in PCAPCD's Offsite Mitigation Fee Program by paying the equivalent amount of money to mitigate the net annual project contribution of GHG that exceeds the PCAPCD threshold. The actual amount to be paid shall be determined according to the selected program and applicable cost-effectiveness rate agreed to by WPWMA and PCAPCD. (Please note that there is currently no mitigation fee option for GHG offsite mitigation, because there is no fee rate or cost-effectiveness factor established by a statewide incentive program.)
- Any combination of these or other measures, as determined feasible by WPWMA and PCAPCD.

If an offsite mitigation measure is required for a land-use project, that mitigation measure shall explicitly identify the required GHG emission reduction and the implementation method. PCAPCD's Board of Directors adopted the Review of Land Use Projects under CEQA Policy in 2016, which outlines the principles on how the GHG offsite mitigation measures should be implemented, by the selected mitigation scenarios, to offset the land-use project's related operational GHG emissions. The project applicant has two options to implement offsite mitigation measures for GHG emissions: (1) proposing their own offsite mitigation project or (2) purchasing carbon credits from recognized carbon credit registries.

When offsite mitigation is an option used to mitigate the project's operational impacts, additional (surplus) emission reductions achieved from offsite sources should be equal to the emission reductions required to mitigate the land-use project's onsite impacts. This can provide the proper nexus for GHG emission mitigation under CEQA. For example, excessive GHG emissions from a land-use project's energy usage could be reduced by a project that would generate the same amount of surplus GHG emission reductions by renewable energy.

Prior to implementation of an offsite mitigation project, the applicant shall consult with PCAPCD and demonstrate that the project meets all conditions required by a selected carbon credit protocol approved by California Air Pollution Control Officers Association (CAPCOA), CARB, or other similar entities determined acceptable by PCAPCD. If the applicant chooses to purchase carbon credits, the credits should be registered under the CAPCOA GHG Reduction Exchange Program, American Carbon Registry, Climate Action Reserve, or other similar carbon credit registry as determined acceptable by PCAPCD. This requirement means that the proposed mitigation project or carbon credit purchase can result in an equivalent GHG reduction required by the offsite mitigation measure. In addition, PCAPCD encourages the applicant to consider generating or purchasing local and California-only carbon credits as the preferred mechanism for implementing the GHG offsite mitigation measure, which helps direct the state toward achieving the GHG emission reduction goal.

The following are well-recognized entities with approved carbon offset protocols or registered carbon credits that can be applied toward a land-use project's GHG emission reductions:

- CAPCOA GHG Reduction Exchange Program (GHG Rx)
- CARB Compliance Offset Protocols
- Verified Carbon Standard (Verra)
- American Carbon Registry
- Climate Action Registry

PCAPCD notes that it will not be involved with any carbon credit purchase agreements; PCAPCD is only assisting the lead agency with verification of the carbon credits to confirm they are real, permanent, quantifiable, verifiable, enforceable, and additional.

Level of Significance after Mitigation

Implementation of Mitigation Measure 10-1 would result in additional reductions in GHG emissions. Available information on the benefits of the proposed mitigation measure is not sufficient to quantify the additional emission reductions that would occur, so this analysis is qualitative and conservative in nature.

Even with incorporation of all available and feasible BMPs, project design measures, and mitigation measures to reduce emissions, including funding of mitigation fees or purchase of offsets, it is likely that project-related GHG emissions could continue to exceed PCAPCD's recommended bright-line threshold of 10,000 MT CO_2e/year. Participation in a verified GHG emission offset program cannot be assured. No additional feasible mitigation measures are available to reduce this impact. This impact would remain **significant and unavoidable**.

Material Recovery Facility Operations Design Concept Evaluation.

As described in Chapter 3, Project Description, and Chapter 4, Approach, proposed changes to material recovery facility (MRF) operations could be implemented under either plan concept and would potentially result in changes in quantities, timing, and release locations of estimated project-related GHG emissions from construction and operations. The proposed changes would involve facility improvements to accommodate accelerated and expanded diversion of organic material, including organic fraction of municipal solid waste (OFMSW), for composting in covered aerated static pile (CASP) composting systems and increased recovery and diversion of recyclables. Changes may also involve the addition of an enclosed building for organics receipt and processing.

To accommodate the proposed increase in the quantity of material processed at the organics management facility, facility operation would need to increase sooner than anticipated in Plan Concept 1 and Plan Concept 2, but the proposed total processing capacity would not exceed the full buildout capacity evaluated for the proposed project. The proposed CASP processes are similar to the ASP process analyzed as part of the proposed project and would provide similar or better control of fugitive emissions from active composting. Use of an enclosed building for organics receipt and processing was not specifically analyzed as part of the proposed project, but it is not expected to result in increased operational GHG emissions. Processing of increased quantities of organic material and recyclables could be accommodated within the existing MRF facility, but it may require use of additional equipment, which could indirectly generate increased GHG emissions. Increased amounts of recyclables recovered from the MRF would also be anticipated to result in a near-term increase in outbound traffic taking material to market and associated GHG emissions.

The expanded use of CASP would have a corresponding increase in energy use in the near term, indirectly increasing GHG emissions associated with the electricity used for blowers. Increased diversion would reduce the amount of waste residuals sent to the landfill, reducing the frequency of landfill cell construction over time and reducing the construction and operational GHG emissions associated with landfill waste disposal. Diversion of more OFMSW from the landfill within a faster timeframe would correspond to a near-term (next 10 years) reduction in LFG production, including reduced fugitive LFG and related GHG emissions.

The conservative approach used to calculate emissions associated with construction and operation of the proposed project included assessing multiple overlapping construction projects to allow flexibility in the timing of individual projects and application of a peaking factor to address variability in material quantities received and processed. While the proposed changes have the potential to result in near-term emissions increases for the organics management facility and MRF, they also have the potential to result in decreased

emissions from waste disposal operations and LFG. Overall, operational activity is not expected to exceed the levels analyzed for full buildout of the proposed project with implementation of the proposed changes.

PCAPCD recently issued permits to the WPWMA related to ASP composting; however, these permits would likely require updates as the project proceeds. The enclosed building for organics processing, if constructed, would be equipped with an odor control system and would require preconstruction review and permitting by PCAPCD as a stationary source. As the permitting process is undertaken, the WPWMA facility must continue to comply with applicable regulatory and permitting requirements.

Based on this qualitative review, the proposed MRF operations design concept changes would be covered under the current assumptions of this GHG emissions impact analysis, and the conclusions of the project-level analysis related to GHG emissions would not change.

IMPACT 10-2	Consistency with Applicable Plans, Policies, or Regulations Adopted to Reduce GHG Emissions. The construction and operation of the solid waste elements, complementary and programmatic elements, and supporting elements under the proposed project would implement and accommodate compliance with goals and directives in applicable plans, policies, and regulations to reduce GHG emissions. This impact would be **less than significant**.

Plan Concept 1

As described in Section 10.3, Regulatory Setting, federal and state laws and regulations have resulted in plans and policies to reduce GHG emissions from the waste management sector. The proposed project would integrate and support the goals and directives of federal and state plans and policies, including the following:

- Increasing diversion of organics and other recyclable commodities from landfills
- Increasing use of alternative technologies, such as ASP composting
- Reducing volumes of waste landfilled
- Expanding the current waste management infrastructure to accommodate the increases in recycling and remanufacturing of waste materials to meet goals, including co-location of new waste treatment facilities at existing waste sites to minimize permitting issues and environmental impacts
- Implementing BMPs at landfills, including specific requirements for LFG collection system design and construction, landfill unit and cell design and construction, waste placement methods, daily and intermediate cover materials and practices, use of compost or other biologically active materials in cover soils, and organic materials management

Accordingly, the following discussion regarding project consistency with local goals and policies from the Placer County Sustainability Plan and the Placer County General Plan is provided for informational purposes only.

Construction and operation of the proposed project under Plan Concept 1 would be consistent with the Placer County General Plan, which was originally adopted in 1994 and last updated in 2013. The General Plan includes several policies related to addressing GHG emissions and climate change in Placer County, including implementation of building and operational energy efficiency programs, traffic demand management, and water-efficient landscaping (Placer County 2013). Project proponents are encouraged to consult with the County early in the planning process regarding Countywide indirect and areawide source programs and transportation control measure programs. The proposed project under Plan

Concept 1 includes measures to reduce GHG emissions and promote energy efficiency and is therefore consistent with this General Plan policy.

The Placer County Sustainability Plan, adopted in January 2020, includes voluntary goals that include working with WPWMA to find funding, provide public education, support compliance with state laws and regulations, and evaluate feasible approaches to meet aspirational goals for CH_4 capture and transition to vehicles and haul trucks that would use low-carbon fuels and electricity. The Placer County Sustainability Plan forecasts Countywide GHG emissions from solid waste at 190,910 MT CO_2e per year (Placer County 2020). Estimates of project-related GHG missions for Plan Concept 1 are higher than the Countywide solid waste GHG estimates in the sustainability plan, but it is not accurate to compare the two GHG emission inventories, because of differences in assumptions and calculation methods. Therefore, the proposed project would result in less-than-significant impacts.

Plan Concept 2

As described in Chapter 3, Project Description, the primary differences between Plan Concept 1 and Plan Concept 2 are related to where various facilities would be located on WPWMA's property and when various facilities would be developed. These differences would not change the conclusions regarding consistency with applicable plans, policies, or regulations adopted to reduce GHG emissions identified for Plan Concept 1. As such, impacts related to consistency with GHG plans, policies, and regulations for implementation of Plan Concept 2 would be the same as described for Plan Concept 1.

Material Recovery Facility Operations Design Concept Evaluation.

Proposed changes to MRF operations could be implemented under either plan concept and would potentially result in changes in quantities, timing, and release locations of estimated project-related GHG emissions from construction and operations. The proposed changes would involve facility improvements to accommodate accelerated and expanded diversion of organic material, including OFMSW, for composting in CASP composting systems and increased recovery and diversion of recyclables. Changes may also involve the addition of an enclosed building for organics receipt and processing.

Based on this qualitative review, the proposed MRF operations design concept changes would be covered under the current assumptions of this analysis of project consistency with applicable plans, policies, and regulations for GHG reductions, and the conclusions of the project-level analysis related to GHG emissions would not change.

10.5 References

Association of Environmental Professionals (AEP). 2021. *2021 California Environmental Quality Act (CEQA) Statute and Guidelines.* January 1. https://www.califaep.org/docs/CEQA_Handbook_2021.pdf.

California Air Resources Board (CARB). 2011. Cap and Trade 2010. Accessed June 2021. https://www.arb.ca.gov/regact/2010/capandtrade10/capandtrade10.htm.

California Air Resources Board (CARB). 2014a. *California Greenhouse Gas Inventory for 2000–2012—by Category as Defined in the 2008 Scoping Plan*. Last Updated March 24, 2014. https://www.arb.ca.gov/cc/inventory/pubs/reports/2000_2012/ghg_inventory_scopingplan_00-12_2014-03-24.pdf.

California Air Resources Board (CARB). 2014b. *2013 Scoping Plan Documents*. Accessed June 2021. https://ww2.arb.ca.gov/our-work/programs/ab-32-climate-change-scoping-plan/2013-scoping-plan-documents.

California Air Resources Board (CARB). 2016. *Advanced Clean Cars Program*. Accessed June 2021. https://ww2.arb.ca.gov/our-work/programs/advanced-clean-cars-program/about

California Air Resources Board (CARB). 2017. *2017 Scoping Plan Documents*. Accessed June 2021. https://ww2.arb.ca.gov/our-work/programs/ab-32-climate-change-scoping-plan/2017-scoping-plan-documents.

California Air Resources Board. 2021. *Advanced Clean Cars Program*. Accessed August 6, 2021. https://ww2.arb.ca.gov/our-work/programs/advanced-clean-cars-program/about.

California Energy Commission. 2019. *Building Energy Efficiency Standards – Title 24*. Accessed June 2021. https://www.energy.ca.gov/programs-and-topics/programs/building-energy-efficiency-standards

California Natural Resources Agency (CNRA). 2009. 2009 California Climate Adaptation Strategy. http://resources.ca.gov/docs/climate/Statewide_Adaptation_Strategy.pdf.

California Natural Resources Agency (CNRA). 2017 (May). Safeguarding California Plan: 2017 Update: California's Climate Adaptation Strategy. Draft. https://resources.ca.gov/CNRALegacyFiles/wp-content/uploads/2017/05/DRAFT-Safeguarding-California-Plan-2017-Update.pdf.

Intergovernmental Panel on Climate Change (IPCC). 2013. "Carbon and Other Biogeochemical Cycles." *Climate Change 2013: The Physical Science Basis*. Accessed June 2021. https://www.ipcc.ch/report/ar5/wg1/carbon-and-other-biogeochemical-cycles/

Intergovernmental Panel on Climate Change (IPCC). 2014. AR5 Synthesis Report: Climate Change 2014. Accessed June 2021. https://www.ipcc.ch/report/ar5/syr/.

National Highway Traffic Safety Administration (NHTSA). 2012. *Obama Administration Finalizes Historic 54.5 mpg Fuel Efficiency Standards*. Accessed June 2021. https://obamawhitehouse.archives.gov/the-press-office/2012/08/28/obama-administration-finalizes-historic-545-mpg-fuel-efficiency-standard.

National Highway Traffic Safety Administration (NHTSA). 2016. *Corporate Average Fuel Economy*. Accessed June 2021. https://www.nhtsa.gov/laws-regulations/corporate-average-fuel-economy.

Placer County. 2013. *Countywide General Plan Policy Document*. Last update, May 21, 2013. Auburn, CA. https://www.placer.ca.gov/DocumentCenter/View/10156/Placer-County-General-Plan-PDF.

Placer County. 2018. *Sunset Area Plan/Placer Ranch Specific Plan Draft Environmental Impact Report* (State Clearinghouse No. 2016112012). December.

Placer County Community Development Resource Agency (Placer County). 2019. *Sunset Area Plan/Placer Ranch Specific Plan Final Environmental Impact Report*. State Clearinghouse #2016112012. October. Prepared by Ascent Environmental, Sacramento, CA.

Placer County. 2020. *Placer County Sustainability Plan*. Adopted January 28, 2020. https://www.placer.ca.gov/DocumentCenter/View/42940/PCSP-ADOPTION?bidId=.

Placer County Air Pollution Control District (PCAPCD). 2016a (October). *California Environmental Quality Act Thresholds of Significance: Justification Report*. https://www.placer.ca.gov/DocumentCenter/View/2061/Threshold-Justification-Report-PDF.

Placer County Air Pollution Control District (PCAPCD). 2016b (October 13). *Placer County Air Pollution Control District Policy – Review of Land Use Projects under CEQA*. Adopted October 13, 2016. https://www.placer.ca.gov/DocumentCenter/View/2060/Review-of-Land-Use-Projects-Under-CEQA-Policy-PDF.

Placer County Air Pollution Control District (PCAPCD). 2017. *CEQA Handbook*. Accessed June 2021. https://www.placer.ca.gov/1801/CEQA-Handbook.

Sacramento Area Council of Governments (SACOG). 2016. *2016 Metropolitan Transportation Plan/ Sustainable Communities Strategy*. Accessed June 2021. https://www.sa cog.org/2016-mtpscs.

11. Hazards, Hazardous Materials and Wildfire

This chapter describes the known hazards and hazardous materials in the proposed project area and evaluates the potential impacts associated with Plan Concept 1 and Plan Concept 2. These two plan concepts include similar design elements, but the locations and characteristics of the elements vary between the two plans. This chapter also addresses wildfire risk in the vicinity of the proposed project and whether the proposed project would contribute to wildfire risk.

11.1 Environmental Setting

This section describes the environmental setting and impacts related to hazards and hazardous materials and wildfire risk.

11.1.1 Hazards and Hazardous Materials

For this analysis, the term "hazardous materials" will be defined as both hazardous substances and hazardous wastes. In the *Code of Federal Regulations* (CFR), "hazardous material" is defined as "a substance or material that … is capable of posing an unreasonable risk to health, safety, and property when transported in commerce" (49 CFR 171.8).

California defines a hazardous material as "any material that because of its quantity, concentration, or physical or chemical characteristics poses a significant present or potential hazard to human health and safety or the environment if released into the workplace or environment" (*Health and Safety Code* Section 25501). "Hazardous materials" include, but are not limited to, hazardous substances, hazardous waste, and any material which a handler or the administering agency has a reasonable basis for believing that it would be injurious to the health and safety of persons or harmful to the environment if released into the workplace or the environment (*Health and Safety Code* Section 25501).

"Hazardous wastes" are defined in California *Health and Safety Code* Section 25141(b) as wastes that: "…because of its quantity, concentration, or physical, chemical, or infectious characteristics:

- Cause, or significantly contribute to an increase in mortality or an increase in serious irreversible, or incapacitating reversible, illness.
- Pose a substantial present or potential hazard to human health or the environment, due to factors including, but not limited to, carcinogenicity, acute toxicity, chronic toxicity, bioaccumulative properties, or persistence in the environment, when improperly treated, stored, transported, or disposed of, or otherwise managed.

11.1.2 Wildfire

The California Department of Forestry and Fire Protection (CalFire) uses Fire Hazard Severity Zones (FHSZs) to classify anticipated fire-related hazards for the entire state and includes classifications for State Responsibility Areas (SRAs), Local Responsibility Areas (LRAs), and Federal Responsibility Areas. Fire hazard measures physical fire behavior based on vegetation type (fuel), topography, and weather conditions and considers fire spread rate, fire heat production, and production of embers that facilitate fire growth. Fire hazard severity represents the potential of an area to burn and the severity with which it may burn. The entire project site is within the LRA for Placer County.

11.1.3 Methodology

The assessment of hazards and hazardous materials impacts was derived from review of the following resources as well as hazard and hazardous materials protocol and practices for the project. This information was reviewed in association with the project location and planned construction and operation protocol to determine the potential presence of existing or resulting hazards associated with the project as identified in the CEQA Checklist.

- State Water Resources Control Board (SWRCB) GeoTracker website (SWRCB 2020)
- Department of Toxic Substances Control (DTSC) EnviroStor website (DTSC 2020)
- Aerial photographs and topographic maps
- General plans, *Code of Ordinances*, zoning maps, and emergency evacuation and response plans
- Office of Emergency Services (OES) website for Placer County (https://www.placer.ca.gov/1371/About-OES)
- Placer County Sunset Area Plan Final EIR (2019)

The following facility permits are also relevant in this assessment:

- Solid Waste Facilities Permit (SWFP) No. 031-AA-0001 for Waste Recovery including MRF operations, compost operations (organics management), construction and demolition (C&D) waste operations, public waste drop-off area operations, and household hazardous waste (HHW) facility operations.
- SWFP No. 031-AA-0210 for Waste Disposal operations, including operation of the Western Regional Sanitary Landfill (WRSL) and the receipt of inert materials.
- Waste Discharge Requirements Order No. R5-2007-0047; and Monitoring and Reporting Program No. R5-2007-0047, and 93-200.
- General Permit to Discharge Stormwater Associated with Industrial Activity.

The wildfire assessment was derived from reviewing the following resources to determine the potential presence of existing or resulting potential risk for wildfire or post-wildfire impacts at the proposed project:

- Aerial photographs and topographic maps
- CalFire website
- General plans, zoning maps, emergency evacuation, and response plans

11.1.4 Local Setting

Potential hazards that exist at the project site include the potential for hazardous wastes to be encountered at the current ongoing landfill operations including HHW operations; potential release of bioaerosols from composting operations; potential hazards associated with contamination to groundwater and surface waters through contact with landfill gas (LFG), LFG condensate, landfill leachate, compost leachate and contact water, and potential explosions from the buildup of LFG; and the presence of vectors (discussed in Section 11.1.3).

Hazards Associated with Waste Disposal and Recovery Operations

The WRSL is operated as a Class II and Class III facility. Class III facilities are those that accept nonhazardous municipal solid waste (MSW). The definition of nonhazardous solid waste from 27 *California Code of Regulations* (CCR) Section 20220 is as follows:

> Nonhazardous solid waste includes all putrescible and nonputrescible solid, semi-solid, and liquid wastes, including garbage, trash, refuse, paper, rubbish, ashes, industrial wastes, demolition and construction wastes, abandoned vehicles and parts thereof, discarded home and industrial appliances (except e-wastes), manure, vegetable or animal solid and semi-solid wastes, and other discarded waste (whether of solid and semi-solid consistency); provided such wastes do not contain wastes which must be managed as hazardous wastes, or wastes which contain soluble pollutants in concentrations which exceed applicable water quality objectives or could cause degradation of wastes of the state (i.e., designated waste).

A Class II facility can accept all of the nonhazardous solid waste allowed for a Class III facility plus "designated" wastes, using the criteria set forth in CCR Title 27 and Waste Discharge Requirements R5-2007-0047. Waste accepted at a Class II facility includes any industrial solid waste that cannot be described as hazardous.

The Western Placer Waste Management Authority's (WPWMA's) active Class II and Class III solid waste landfill has capacity to accept solid waste through 2058 under Waste Discharge Requirements Order No. R5-2007-0047. The Solid Waste Facility Permit (No. 031-AA-0210 for Waste Disposal), which is reviewed every 5 years, is scheduled to be reviewed in December 2022 by Placer County Environmental Health as the Local Enforcement Agency (LEA). The WRSL is prohibited from accepting hazardous, radioactive, medical, liquid, or other wastes requiring special treatment or handling.

The MRF operates under a separate Solid Waste Facility Permit (No. 031-AA-0001 for Waste Recovery), which includes MRF operations, compost operations (organics management), C&D waste operations, public waste drop-off area operations, and HHW facility operations. As described by Placer County, the MRF is operated to recover recyclable materials from mixed waste, process green and wood wastes for composting or biomass, receive and process source-separated recyclables, and provide for receipt and recycling or disposal of HHW. Materials not recovered through MRF processing are disposed of in the landfill (Placer County 2019).

The site includes two HHW facilities, one used primarily for acceptance of HHW and one used for HHW acceptance and characterization/containerizing HHW prior to offsite transport. Hazardous waste from households and Conditionally Exempt Small Quantity Generators is accepted by the HHW operations. HHW is only accepted in small quantities and includes items such as paints, pesticides, and oils. The WPWMA has an ongoing load-checking program to detect and manage prohibited wastes, including HHW, that may enter the site commingled with solid waste loads.

After an initial screening of loads at the scale houses, customers are directed to the appropriate areas within each facility for unloading materials. Spotters generally conduct load content surveillance near the unloading areas. Waste inspections consist of a detailed examination of a randomly selected load performed a minimum of 2 days per week. If hazardous materials are found at any of the waste receiving, processing, or disposal areas, they are transported to and temporarily stored in a hazardous waste containment structure designed specifically for that purpose. Hazardous wastes are stored for no longer than the time period allowed by state regulations (per Title 22, CCR, §66262.34(c)(1)). Licensed haulers remove any hazardous waste encountered onsite.

Other project components including the organics management operation are not anticipated to generate hazardous wastes. Class III nonhazardous solid wastes are assumed to include mixed municipal wastes, C&D debris, yard wastes and rubbish, and inert materials such as concrete and white goods, as described in Chapter 3, Project Description. Organics management operations also do not involve the use of hazardous materials.

Hazards Associated with Release of Bioaerosols from Composting

The WPWMA compost facility is permitted under the MRF's Solid Waste Facility Permit (No. 031-AA-0001 for Waste Recovery) issued by CalRecycle, Authority to Construct permits (WPMR AC-21A, B and C) issued by the PCACPD and the General Composting Order issued by the RWQCB (WQ 2015-0121-DWQ). The total permitted site is 52.6 acres, with compost transfer/operations occurring on 25.4 acres. Bioaerosols, specifically *Aspergillus fumigatus*, associated with composting activities could be considered a health hazard in susceptible individuals, although it is not considered a health hazard for healthy individuals. This fungus is commonly found in agricultural settings, lawn mowing, and gardening activities. In composting facilities, it could be dispersed from dusty composting operations. The composting operations involve the application of water to the compost windrows and the periodic turning of windrows to minimize release of bioaerosols and dust.

Hazards Associated with Daily Operational Activities

Daily operational activities have the potential to present hazards onsite including the potential for hazardous materials spills and storage (that is, fuels, oils, and lubricants), the potential for spills associated with leaking vehicles and maintenance service operations, potential risks associated with operation of heavy equipment, and risks associated with improper dust control.

Because of these risks, employees undergo training in the following areas:

- Mechanical and safety procedures for operating and maintaining equipment
- Lock out/tag out procedures to be used when working on equipment
- Procedures for detecting and handling hazardous waste
- Use of personal protective equipment for each job position
- Location, use, and limitations of available first aid and emergency equipment
- Injury and Illness Prevention Plan
- Hazard communication/employee right to know
- Spill response procedures
- Emergency evacuation procedures

Employees involved in handling waste receive additional training in detecting and handling hazardous waste. Key employees receive 40 hours of Hazardous Waste Operations Training and are recertified annually. Additionally, a certified instructor trains all new forklift and loader operators. Forklift and loader operators are recertified every year. A receiving area supervisor, lead HHW technician, sort lead/supervisor, and maintenance supervisor receive emergency response training and act as Emergency Response Coordinators. These individuals and all supervisors also receive training in first aid and CPR.

Dust can present hazards onsite if uncontrolled. The major sources of dust are during unloading and processing of commercial MSW loads in the receiving area of the MRF and during receiving and processing of green, wood, and C&D. The following measures are implemented for dust control:

- Dust generated from material being unloaded or from loading the in-feed conveyors is substantially contained within the receiving area.
- Misters are used to minimize dust along the sorting lines and in the receiving area.
- Dust generated from the processing of wood waste, green waste, and C&D is controlled with water spray.
- Paved areas are swept or watered daily during the dry season.
- Dust from the composting operation is minimized by maintaining appropriate moisture content of compost.

- Grinding and windrow turning operations are minimized during windy conditions.

Hazardous Materials in Soil and Groundwater

WPWMA implements a groundwater monitoring program at the WRSL, described in Chapter 12, Hydrology and Water Quality. The predominant groundwater flow direction is toward the south (SCS Engineers 2020). The *Second Quarter 2020 Monitoring Report* (SCS Engineers 2020) for the facility indicates that volatile organic compounds (VOCs) and inorganic compounds were detected in monitoring wells at levels that exceed the maximum concentration level for drinking water.

In 2019, as reported in the Engineering Feasibility Study for the WRSL, groundwater was contaminated by VOCs and inorganics. A Correction Action Program (CAP) was implemented to mitigate the impacts to groundwater. The CAP consisted of installation of a landfill gas collection system and closure of unlined Modules 1, 2, and 10, and partially lined Module 11. Closure of the unlined modules entailed recompacting the soil cover, improving the drainage by regrading, and the placement of vegetative cover layers and low permeability clay (SCS Engineers 2019).

Based on information from the EnviroStor and GeoTracker databases maintained by DTSC and SWRCB, there are no hazardous materials sites located within 1 mile of the WPWMA facility boundary that have affected the soil or groundwater.

Hazards Associated with Landfill Gas Management System

Decomposition of organic waste in landfills can generate carbon dioxide and methane, referred to as LFG. During the anaerobic phase of decomposition, methane continues to be generated until all organic matter in the landfill has decomposed. LFGs can accumulate in landfills and seep out through cracks in liners and other permeable materials. LFG is also a hazard when it becomes trapped in confined spaces, including buildings, where it can become explosive and threaten the health and safety of onsite personnel.

WPWMA implements an active LFG extraction system at WRSL consisting of approximately 100 operating interior vertical extraction wells including 12 interior horizontal extraction wells, 27 perimeter migration control extraction wells, HDPE laterals, subheaders and header pipes, 4 pneumatic condensate sumps, and a flare station. The flare station consists of three centrifugal blowers, two air compressors, and an enclosed ground flare.

A LFG-to-energy facility, owned and operated by Energy 2001 Inc. under a lease agreement with WPWMA, is located on the northern side of the site. This facility generates electricity by running LFG through internal combustion engines. The Energy 2001 facility currently diverts up to 1,800 scfm of LFG from the flare station. The Energy 2001 facility also includes a small flare capable of handling up to 450 scfm of LFG and is capable of operating either as a stand-alone facility or in conjunction with the existing flare.

LFG Monitoring

In accordance with Section 20919.5 of Title 27, the WPWMA monitors the LFG detection probes on a monthly basis to verify that the concentration of methane gas does not exceed 25 percent of the lower explosive limit in facility structures (excluding gas control or recovery system components) and the lower explosive limit at the facility property boundary.

There are approximately 17 LFG monitoring points around the perimeter of the site. Additional monitoring probes may be added as the landfill continues to fill with waste over time. Prior to the placement of waste in a new module, perimeter gas monitoring probes are installed in accordance with Title 27 Section 20925, which requires nested probes at a minimum of 1 per 1,000 feet around the perimeter of the

landfill (as a whole, not by individual landfill module). Each LFG monitoring point includes one intermediate and one deep monitoring probe, with the deep one equal to the lowest waste elevation. In accordance with Title 27 Section 20921 requirements for the closed part of the landfill and Section 29025 for the active parts, these probes are monitored on a monthly basis. Reports of the monthly monitoring are presented to the LEA.

If methane gas levels exceed the specified levels, the WPWMA immediately takes necessary steps to protect human health and notifies the LEA within 7 days of detection. Within 60 days of a detection, the WPWMA would implement a remediation plan for the methane gas releases.

11.1.5 Regional Setting

Land uses within the vicinity of the proposed project include agriculture and grazing, and industrial and commercial activities. Placer County established restrictions on land use near landfills through General Plan Policy 4.G.11, such that residential land use is not permitted within 1 mile of an active landfill (Placer County 2013). However, in 2019, the County approved the Sunset Area Plan, which will allow new residential uses within 2,000 feet of WPWMA's property line with approval of a specific plan, master plan, or development agreement.

Existing Hazards

This subsection describes the existing hazards within the project vicinity. The proposed project is within the mapped boundary of the Placer County Sunset Area Plan (SAP 2019). Although the proposed Plan Concepts 1 and 2 do not include any additional regulated hazardous materials sites, regulated hazardous materials sites are located nearby including the Athens Industrial Area, Thunder Valley Casino Resort Wastewater Treatment Plant, and the Rio Bravo Rocklin Biomass Facility. Additionally, several former regulated hazardous materials sites are located just west of Industrial Avenue and south of Athens Avenue, within 3 miles of the project site. As described by Placer County, the Thunder Valley Casino Resort Wastewater Treatment Plant and Rio Bravo Rocklin Biomass Facility use hazardous materials, generate hazardous waste, and have regulated air and water discharges. The Athens Industrial Area, which is located within 0.5 mile of the WPWMA, consists of the CEMEX Lincoln cement plant, the PC Exploration company, several wood recycling operations, and the A&A concrete supply operation. These facilities use hazardous materials, generate hazardous waste, and have regulated air discharges. (Placer County 2019)

Agricultural Practices

Plan Concepts 1 and 2 would involve expansion of the WPWMA Waste Disposal and Waste Recovery activities to the western and eastern properties as described in Chapter 3, Project Description. According to Placer County, agricultural properties have historically stored, handled, and applied pesticides and herbicides as part of their practices (Placer County 2019).

In the western property, the southwestern area is currently leased to the City of Lincoln for discharge of reclaimed water. The southwestern area consists of agricultural land (pivot-irrigated alfalfa [*Medicago sativa*]) and non-native grasslands that are periodically mowed and baled. Other parts of the property involve agricultural irrigation. Much of the northwestern property appears to be regularly disturbed by burns and tilling, based on disked and furrowed roads and aerial photographs taken between 1993 and 2016 (Google Earth 2020).

The eastern property is undeveloped land. A motocross track, covering approximately 16 acres of the central part of the eastern property, was in operation for a few years starting in 2006 but has been inactive for many years. The eastern property is currently used for seasonal cattle grazing.

No known soil sampling for herbicides and pesticides have been performed on the western and eastern properties. Therefore, the hazards associated with past agricultural practices is currently unknown.

Vector Control

The project area is located within the boundaries of the Placer Mosquito and Vector Control District service area (Placer County 2019). The County established the Placer Mosquito and Vector Control District in 2018 to fund mosquito abatement. The district implements biological controls to reduce the mosquito population and prevent spread of diseases carried by mosquitoes. Biological controls include introducing natural enemies, including parasites, pathogens, and predators to manage mosquito populations. The district works with landowners to limit standing water, manage emergent vegetation, and maintain ditches and natural drains.

At the WRSL, the potential for vector problems are reduced by the covering of waste with daily soil cover or alternative daily cover and regular trash pickup throughout the site (Golder Associates 2017). After rain, where possible, WRSL staff patrol and drain areas that could collect standing water and provide mosquito-breeding areas. All areas that could potentially hold water are inspected weekly for mosquito larvae during rainy periods. Additionally, the site implements a bird control program that involves bird bomb and whistler cartridges to keep birds away from the site. Rodents have not previously been a problem at the site.

At the MRF, vector attraction and breeding are controlled by minimizing contaminants in the feedstock, frequently turning windrows, and maintaining the composting material at the proper temperature. Stockpiled feedstock finished compost and the leachate pond are inspected for evidence of vectors. Feedstock contamination is less than 1 percent, and with proper temperature control, there is no associated problem with rodents or insects. Additionally, when there is sufficient water in the leachate control pond, a pump will recirculate and aerate the water to minimize mosquito-related problems. The 11 operational and storage areas are cleaned routinely to prevent a build-up of materials that may attract vectors (Nortech 2020).

Wildfire Hazards

The project area is located on level to low-sloping terrain, in a rural area of Placer County. The majority of WPWMA properties are flat terrain, with the exception of the WRSL closed and active areas. The wildfire hazard in Placer County generally extends from early spring to late fall. A combination of factors could lead to an increased wildfire hazard including rising temperatures, accumulation of dry vegetation, and a decrease in the relative moisture content in air.

The State Board of Forestry identifies those lands where the California Department of Forestry and Fire Protection (CalFire) has the primary duty for wildland fire prevention and suppression; these lands are commonly known as SRAs. CalFire has developed a Fire Hazard Severity Scale that uses three criteria to evaluate and designate potential fire hazards in wildland areas: fuel loading (vegetation), fire weather (winds, temperatures, humidity levels, and fuel moisture contents), and topography (degree of slope). As shown on Figure 11-1, the proposed project is not located in a fire hazard security zone. The proposed project is located within a LRA, not a SRA (CalFire 2021).

As described by Placer County (2019), communities within the County are becoming more susceptible to wildfire risk due to past fire suppression efforts and increasing population. According to *the Placer County Community Wildfire Protection Plan*, the proposed project area lies within a wildland urban interface (WUI) boundary (Placer County 2019). The WUI consists of heavily vegetated areas where wildlands meet urban development. The number of people living in the WUI has increased. Fires in WUI areas would result in major losses of property and structures.

Placer County Local Hazard Mitigation Plan Update (LHMP) describes the FHSZs at the proposed project area as urban unzoned, non-wildland/non-urban, and moderate. Fire threat levels were mapped using CalFire FHSZs and wildfire data from its Fire and Resource Assessment Program. The proposed project area is at risk for smaller grassfires, especially during the dry, hot summers. In addition, the proposed project area is located within the Sunset Area Plan where the Cal-Adapt model, which presents potential effects under various climate-change scenarios, shows that the Sunset Area Plan area is projected to see a potential decrease in the number of acres burned by wildfire in 2085 as compared to 2020 projections. (Placer County 2019)

Schools

There are no existing schools within the proposed project area. The state CEQA Guidelines establish requirements for projects within 0.25 mile of a school so that the potential health impacts that may result from exposure to hazardous materials, wastes, and substances are examined for their potential significance. No schools were identified within 0.25 mile of the proposed project.

Airports

The state CEQA Guidelines establish that where a proposed project is located within 2 miles of a public airport or public use airport, it shall not result in a safety hazard for people residing or working within 2 miles of the airport. No public airports or public use airports are located within 2 miles of the proposed project.

Emergency Response and Evacuation Plans

Placer County OES prepares and maintains evacuation plans and emergency operations plans. They provide emergency management services and respond to emergencies ranging from wildland fires to storm events to hazardous material incidents. During an active incident that requires emergency sheltering, such as a fire or a flood, OES secures resources necessary for first responders to protect the community (Placer County OES 2021). Placer County developed the 2016 LHMP in partnership with cities, towns, fire districts, and special districts. The goal of the plan is to guide hazard mitigation planning to better protect the people and property of the County from the effects of hazard events. It is an update to the 2010 FEMA approved Placer County Multi-Hazard Mitigation Plan.

The Draft 2017 Placer County Emergency Operations Plan addresses the planned response to emergency situations associated with natural disasters and emergencies (Placer County Department of Emergency Services 2017). It includes multiple annexes, one of which is the Mass Evacuation Annex. This annex addresses evacuation policies and procedures due to natural hazards and other events. The major evacuation routes in the regions include SR 65 (Placer County 2019). SR 65 is a four-lane highway in the vicinity of the project site and considered part of the project's regional road network.

11.2 Regulatory Setting

The local, state, and federal laws, regulations, and policies that pertain to protection of public safety from hazardous materials, hazardous waste, and wildfire are described in the following subsections. This section only addresses regulations related to the project operations discussed in Section 11.3 that may present hazards.

VICINITY MAP

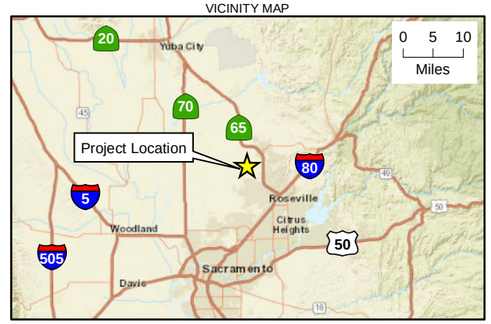

LEGEND

- Project Boundary
- County Boundary
- City Boundary
- Highway

Placer County Fire Hazard Severity Zones

Responsibility Areas

- Federal
- State
- Local

Hazard Classes

- High
- Moderate
- Non-Wildland/Non-Urban
- Urban Unzoned

N

0 2 4
Miles

Figure 11-1. CalFIRE Fire Hazard Security Zones
Draft Environmental Impact Report
Renewable Placer: Waste Action Plan
Placer County, California

Jacobs

\\dc1vs01\GISProj\W\WPWMA\Maps\Report\EIR\Hazards\Wildfire_210610.mxd 7/21/2021

11.2.1 Federal

United States Environmental Protection Agency

The U.S. Environmental Protection Agency (EPA) administers federal environmental laws and works with other federal agencies, state and local governments, and Indian tribes to develop and enforce environmental regulations. EPA researches and sets national standards for a variety of environmental programs that are implemented by states and tribes when issuing permits and monitoring and enforcing compliance.

Federal Toxic Substances Control Act

The Toxic Substances Control Act (TSCA) enacted in 1976 provides EPA with the authority to require reporting, recordkeeping, and testing requirements of hazardous substances. TSCA also regulates the production, importation, use, and disposal of specific chemicals including polychlorinated biphenyls (PCBs), asbestos, radon, and lead-based paint.

Resource Conservation and Recovery Act Hazardous and Solid Waste Act

The Resource Conservation and Recovery Act (RCRA) of 1976 was enacted to create a regulatory framework to manage waste from "cradle-to-grave." Implementation of the RCRA protects the public from harm caused by disposal, spilled or improperly stored wastes, and encourages reuse, reduction, and recycling. Management of wastes involves the collection, transportation, processing, recycling, or disposal of hazardous waste.

Hazardous Materials Transport Act

The Hazardous Materials Transport Act regulates the transportation of hazardous materials, types of hazardous materials, and vehicle marking during transport. The hazardous materials transportation regulations require carriers transporting hazardous materials to receive training in the handling and transportation of hazardous materials.

Hazardous Materials Release Response Plans and Inventory Act of 1985

The Hazardous Materials Release Response Plans and Inventory Act, also referred to as the Business Plan Act, mandates that a business plan be prepared by businesses that use hazardous materials which describes the basic information regarding the location, type, quantity, and the health risks of hazardous materials handled, used, stored, or disposed, which could be accidentally released into the environment. This information provided by businesses is for the purpose of preventing or mitigating the damage to the health and safety of persons and the environment from the release or threatened release of hazardous materials into the workplace and environment. The WPWMA follows the guidance set forth in the Hazardous Materials Business Plan prepared for the facility (Nortech 2020).

Occupational Safety and Health Administration.

The United States Occupational Safety and Health Administration (OSHA) is an agency of the United States Department of Labor. It was created by the Congress of the United States in 1970 under the Occupational Safety and Health Act. Its mission is to provide safe working conditions by preventing work related injuries, illnesses, and occupational fatalities through the implementation of training, enforcement of regulations.

11.2.2 State

***California Code of Regulations* Title 27, Environmental Protection, Division 2, Solid Waste**

Regulations covering waste disposal site operations are specifically defined in CCR Title 27, Division 2, Chapter 3, Sections 20550-20750. Section 20590 requires that operations and maintenance personnel wear and use approved safety equipment for personal health and safety. Section 20610 requires that personnel assigned to operate the site must be adequately trained in subjects pertinent to site operation and maintenance, hazardous materials recognition and screening, and heavy equipment operations, with emphasis on safety, health, environmental controls, and emergency procedures. Section 2615 specifies that the site operator is responsible for providing adequate numbers of qualified personnel to operate the site effectively related to environmental controls, emergencies, and health and safety. Adequate supervision is required by the site operator to comply with all applicable laws, regulations, permit conditions, and other requirements.

The WRSL is operated as a combined Class II and Class III facility. Class III facilities are those that accept MSW that is nonhazardous and is regulated under Title 27 CCR. Title 27 CCR also requires Class II and Class III MSW facilities to have a synthetic landfill liner. Class II facilities accept "designated" and nonhazardous wastes. This site is subject to the liner standards for both Class II and Class III, which includes a synthetic liner component. However, because the WRSL began operating prior to implementation of Subtitle D, the site includes a combination of non-Subtitle D and Subtitle D-compliant (composite) lined modules within the WRSL permitted footprint.

Title 27 regulations also set forth the performance standards and the minimum substantive requirements for landfill gas monitoring and control as it relates to active solid waste disposal sites and to proper closure, postclosure maintenance, and ultimate reuse of solid waste disposal sites so that public health and safety and the environment are protected from pollution related to the disposal of solid waste. Postclosure maintenance guidelines include requirements for an emergency response plan and site security. Construction on the site must maintain the integrity of the final cover, drainage and erosion control systems, and gas monitoring and control systems. All postclosure land uses within 1,000 feet of a landfill site and within the landfill property must be approved by the LEA.

Landfill Controls and Standards

In 1997, some of the solid waste regulations specific to landfills were adopted by the SWRCB (Title 23, Chapter 15) and combined with CalRecycle regulations (Title 14) to form Title 27 of the CCR. Based on this, Title 27 CCR incorporates regulations of the SWRCB and the CalRecycle that apply to Waste Disposal on land. Minimum standards related to solid waste handling and disposal are defined in Title 27 CCR, Division 2, Chapter 3. Landfill disposal site controls for public health and safety detailed in Articles 4 and 6 contain:

- Section 20760, Nuisance Control. Each disposal site shall be operated and maintained so as not to create a public nuisance.
- Section 20790 Leachate. The operator shall ensure that leachate is controlled to prevent contact with the public.
- Section 20800. Dust Control. The operator shall take adequate measures to minimize the creation of dust and prevent safety hazards due to obscured visibility.

- Section 20810. Vector and Bird Control. The operator shall take adequate steps to control or prevent the propagation, harborage or attraction of flies, rodents, or other vectors and to minimize bird problems.
- Section 20870. Hazardous Wastes. Owners or operators of all municipal solid waste landfill (MSWLF) units must implement a program at the facility for detecting and preventing the disposal of regulated hazardous wastes as defined in 40 CFR Part 261 and polychlorinated biphenyls (PCB) wastes as defined in 40 CFR Part 761.
- Section 20919. Gas Control. Where the Enforcement Agency (EA) [or LEA], the local fire control authority, the local building authority, or the CalRecycle has sufficient relevant information to believe a hazard or nuisance is being or may be created by landfill gas, it shall so notify the operator. The local fire control authority and the local building authority shall also notify the EA [or LEA] and the CalRecycle. Thereafter, as directed by the EA [or LEA], the local fire control authority, the local building authority, or the CalRecycle, the site operator shall cause the site to be monitored for presence and movement of landfill gas and shall take necessary action to control such gas. The monitoring program shall be developed pursuant to the specifications of the above agencies. The monitoring program shall not be discontinued until authorized to do so in writing by the requiring agency. Results of the monitoring shall be submitted to the appropriate agencies. If monitoring indicates landfill gas movement away from the site, the operator shall, within a period of time specified by the requiring agency, construct a gas control system approved by that agency. The agency may waive this requirement if satisfactory evidence is presented demonstrating that adjacent properties are safe from hazard or nuisance caused by landfill gas movement. The operator shall duly inform the EA [or LEA] of possible landfill gas problems.

CalRecycle (California Department of Resources Recycling and Recovery). Title 14 CCR, Natural Resources, Division 7.

CalRecycle is responsible for managing California's solid waste stream. This includes the regulation of waste discharge for treatment, storage, and disposal in waste management units such as waste piles, surface impoundments, and landfills, as well as transfer and processing facilities (i.e., MRF and C&D processing facilities) and composting operations.

Title 14 CCR, Division 7, Chapter 3 establishes minimum regulatory standards for solid waste management, handling and disposal as well as operating standards pertaining to health and safety. Chapter 5 establishes guidelines for enforcement of solid waste standards and administration of solid waste facilities permits. Article 6.2 of Chapter 3 establishes minimum operating standards for operations and facilities that receive, store, handle, recover, transfer, or process solid waste, which include the following:

- Section 17407.5. Hazardous, Liquid, and Special Wastes. (1) An operation or facility shall not intentionally accept or store hazardous wastes, including batteries, oil, paint, and special wastes, unless it has been approved to handle the particular waste by the appropriate regulatory agencies. Such approvals shall be placed in the operating record. (2) At operations and facilities where unauthorized hazardous wastes are discovered, control measures as are necessary to protect public health, safety and the environment, such as elimination or control of dusts, fumes, mists, vapors or gases shall be taken prior to isolation or removal from the operation or facility, (3) Liquid wastes and sludges shall not be accepted or stored at an operation or facility unless the operator has written approval to accept such wastes from the appropriate agencies and the EA. The EA shall authorize acceptance of these wastes only if the operation, facility, and the transfer vehicles are properly equipped to handle such wastes in a manner to protect public health, safety, and the environment.

- Section 17408.1. Litter Control. Litter at operations and facilities shall be controlled, and routinely collected to prevent safety hazards, nuisances or similar problems and offsite migration to the greatest extent possible given existing weather conditions.
- Section 17408.2. Medical waste, unless treated and deemed to be solid waste, which is regulated pursuant to the Medical Waste Management Act (commencing with Section 117600 of the *Health and Safety Code*), shall not be accepted at an operation or facility, unless approved by the appropriate regulatory agency.
- Section 17408.7. Personnel Health and Safety. The Injury, Illness, and Prevention Program shall be available for review by local and state inspectors during normal business hours. Nothing in this section is intended to make the local enforcement agency responsible for enforcing the Injury, Illness, and Prevention Program.
- Section 17409.5. Load checking. The operator of an attended operation or facility shall implement a load-checking program to prevent the acceptance of waste which is prohibited by this Article. This program must include at a minimum (1) the number of random load checks to be performed, (2) a location for the storage of prohibited wastes removed during the load-checking process that is separately secured or isolated, and (3) records of load checks and the training of personnel in the recognition, proper handling, and disposition of prohibited waste. A copy of the load-checking program and copies of the load-checking records for the last year shall be maintained in the operating record and be available for review by the appropriate regulatory agencies.
- Section 17410.3. Training. Personnel assigned to the operation or facility shall be adequately trained in subjects pertinent to site solid waste operations and maintenance, hazardous materials recognition and screening, use of mechanized equipment, environmental controls, emergency procedures and the requirements of this Article. A record of such training history shall be maintained and made available for inspection.
- Section 17410.4. Vector, Bird and Animal Control. The operator shall take adequate steps to control or prevent the propagation, harborage and attraction of flies, rodents, or other vectors, and animals, and to minimize bird attraction.

State Water Resources Control Board – Central Valley Region

The SWRCB administers Title 27 CCR (Discharges of Waste to Land), which regulates the discharge to land of certain solid and liquid wastes (including municipal solid wastes).

Federal Occupational Safety and Health Administration (Fed/OSHA) and California Occupational Safety and Health Administration (Cal/OSHA)

Cal/OSHA has the primary responsibility for developing and enforcing state workplace safety regulations. The Cal/OSHA program is a federally approved OSHA program, which adopts and implements regulations that are at least as stringent as those found in Title 29 CFR.

Cal/OSHA is a California State Program implemented to protect the health and safety of workers. Worker safety requirements are to protect employees from workplace hazards or that come into contact with or handle hazardous materials or potentially hazardous wastes. Both the federal OSHA (Fed/OSHA) and Cal/OSHA require mandatory site safety plans. The typical provisions of the site safety plans are for safety training, safety equipment, accident and illness prevention programs, hazardous substance exposure warnings, and emergency response and fire prevention plan preparation.

Both Cal/OSHA and Fed/OSHA enforce worker safety when handling and using chemicals in the workplace. As a result of the Occupational Safety and Health Act of 1970, Fed/OSHA has incorporated the CFR Title 29 regulations pertaining to worker safety and safe work practices.

Cal/OSHA implements regulations specific to use of hazardous materials in the workplace, as described in Title 8, CCR. These requirements specify the elements of safety training, accident and illness prevention programs, safety equipment availability, guidance for hazardous substance exposure warnings, and specifics on the preparation of and emergency action and fire prevention plans. To protect workers and employees at hazardous waste sites, Cal/OSHA also stipulates hazard communication program requirements related to training and procedures for identifying and labeling hazardous substances, communication of hazard substance information, procedures for their proper handling, and preparation of health and safety plans.

Assembly Bill 2948 – County Hazardous Waste Management Plans

In 1986, the State Assembly passed AB 2948 authorizing counties to develop hazardous waste management plans. The purpose of the plans is to adequately treat wastes generated within individual counties and provide sufficient disposal capacity for the hazardous wastes being generated. The Placer County Hazardous Waste Management Plan was adopted by Placer County in 1988.

Hazardous Waste Control Act, 1972

The Hazardous Waste Control Act of 1972 created the state hazardous waste management unit within the Department of Health Services. This law was more comprehensive than the federal program and would later become the model for RCRA.

Department of Toxic Substance Control

In 1976, RCRA was enacted providing federal and state regulation of hazardous waste. The State of California manages hazardous materials and waste through the jurisdiction of the California Environmental Protection Agency (CalEPA), and the DTSC. CalEPA oversees California's Unified Program, which allows them to confirm that local regulatory agencies consistently apply statewide standards when they issue permits, conduct inspections, and engage in enforcement activities. The Certified Unified Program Agencies implement the Unified Program under California *Health and Safety Code* Division 20, Chapter 6.11.

California Department of Forestry and Fire Protection

CalFire is dedicated to the fire protection and stewardship of more than 31 million acres of California's privately owned wildlands. In addition, CalFire provides varied emergency services in 36 of the state's 58 counties via contracts with local governments (CalFire 2020).

California Fire Code

The 2016 *California Fire Code* is based on the *International Fire Code* from the International Code Council and contains consensus standards related to establishing good practices to safeguard the public health, safety, and general welfare from the hazards of fire, explosion, or dangerous conditions in new or existing buildings, structures, and premises.

Hazardous Waste Control Law
Unified Hazardous Waste and Hazardous Materials Management Regulatory Program

The Unified Hazardous Waste and Hazardous Materials Management Regulatory Program (Title 27 CCR) was mandated by the State of California in 1993. The Unified Program has six elements, including the Uniform Fire Code Hazardous Materials Management Plans and Hazardous Materials Inventory Statements.

At the local level, this program is accomplished by identifying a Certified Unified Program Agency that coordinates all of these activities to streamline the process for local businesses. The Placer County Health and Human Services Department serves as the Certified Unified Program Agency for Placer County.

11.2.3 Local

The WPWMA is a Joint Powers Authority (JPA) composed of Placer County and the cities of Lincoln, Rocklin, and Roseville to own and operate a regional recycling facility and sanitary landfill. As a JPA, the WPWMA considers local regulations and consults with local agencies, but County and city regulations are not applicable, because the County and cities do not have jurisdiction over the proposed project. Accordingly, the following discussion of local goals and policies associated with hazards, hazardous materials, and wildfire is provided for informational purposes only.

Placer County Environmental Health Department

The Placer County Health and Human Services Department – Environmental Health Division is the designated Local Enforcement Agency for issuing and enforcing the requirements of Solid Waste Facility Permits. The Placer County Health and Human Services Department is also the designated Certified Unified Program Agency for Placer County coordinating administrative activities related to HHW permits, inspections, and enforcement.

Placer County General Plan

The Placer County General Plan includes policies related to hazards and hazardous materials in Section 8, pertaining to Health and Safety (Placer County 2013).

Fire Hazards (Section 8C of the Placer County General Plan, Policies 8.C.1 through 8.C.12) are described below. The goal of the Fire Hazards Policies in the General Plan is to minimize the risk of loss of life, injury, and damage to property and watershed resources resulting from unwanted fires.

8.C.1. The County shall ensure that development in high-fire-hazard areas is designed and constructed in a manner that minimizes the risk from fire hazards and meets all applicable state and County fire standards.

8.C.2 The County shall require that discretionary permits for new development in fire hazard areas be conditioned to include requirements for fire-resistant vegetation, cleared fire breaks, or a long-term comprehensive fuel management program. Fire hazard reduction measures shall be incorporated into the design of development projects in fire hazard areas.

8.C.3 The County shall require that new development meets state, County, and local fire district standards for fire protection.

8.C.4 The County shall refer development proposals in the unincorporated County to the appropriate local fire agencies for review for compliance with fire safety standards. If dual

responsibility exists, then both agencies shall review and comment relative to their area of responsibility. If standards are different or conflicting, the more stringent standards shall be applied.

8.C.10. The County shall continue to implement state fire safety standards through enforcement of the applicable standards contained in the Placer County Land Development Manual.

Hazardous Materials (Section 8G of the Placer County General Plan, Policies 8.G.1 through 8.G.13) are described below. The goal of the Hazardous Materials Policies in the General Plan is to minimize the risk of loss of life, injury, serious illness, damage to property, and economic and social dislocations resulting from the use, transport, treatment, and disposal of hazardous materials and hazardous materials wastes.

8.G.1. The County shall ensure that the use and disposal of hazardous materials in the County complies with local, state, and federal safety standards.

8.G.3. The County shall review all proposed development projects that manufacture, use, or transport hazardous materials for compliance with the County's Hazardous Waste Management Plan (CHWMP).

8.G.5. The County shall strictly regulate the storage of hazardous materials and wastes.

8.G.6. The County shall require secondary containment and periodic examination for all storage of toxic materials.

8.G.7. The County shall ensure that industrial facilities are constructed and operated in accordance with current safety and environmental protection standards.

8.G.8. The County shall require that new industries that store and process hazardous materials provide a buffer zone between the installation and the property boundaries sufficient to protect public safety. The adequacy of the buffer zone shall be determined by the County.

8.G.9. The County shall require that applications for discretionary development projects that will generate hazardous wastes or utilize hazardous materials include detailed information on hazardous waste reduction, recycling, and storage.

8.G.10. The County shall require that any business that handles a hazardous material prepare a plan for emergency response to a release or threatened release of a hazardous material.

Placer County Ordinance Codes

Chapter 9, Public Peace, Safety and Welfare, Article 9.32 Fire Prevention, Part 4, Section 9.32.160, includes the requirement that property owners, occupants, and person in control of any improved or unimproved parcel of land located in the unincorporated territory of Placer County must abate hazardous vegetation as defined in the code.

Chapter 9, Public Peace, Safety and Welfare, Article 9.32 Fire Prevention, Part 4, Section 9.32.120, describes the Hazardous Vegetation Abatement Ordinance, which requires property owners to maintain 100 feet of space around buildings/structures to help prevent fires.

Placer County *Uniform Fire Code*

Placer County has adopted CCR Fire Code (Sections 15.04.700 and 15.04.710 Fire Code Amendment). The Fire Code contains regulations relating to construction, maintenance, and use of buildings and provides guidance on emergency access, access gates, sprinkler systems, fire alarms within buildings, and construction of access roads to accommodate fire responders.

Airport Land Use Compatibility Plan

The Placer County Airport Land Use Compatibility Plan specifies policies and boundaries that have been established for the Lincoln Regional Airport, which is located approximately 4 miles to the north of the proposed project. The plan lists general land use categories and indicates each use as being "normally compatible," "conditional," or "in-compatible" depending upon the compatibility zone in which it is located. The proposed project is located outside of these designated compatibility zones (Placer County Transportation Planning Agency 2014). McClellan Air Force Base (AFB) is located approximately 10 miles to the south of the proposed project. The McClellan Air Force Base Comprehensive Land Use Plan establishes compatibility guidelines applicable to different land uses including sanitary landfills (McClellan AFB 1992). The proposed project is not located within any areas subject to the McClellan AFB compatibility use restrictions.

11.3 Impact Analysis and Mitigation Measures

11.3.1 Thresholds of Significance

The thresholds of significance for assessing impacts related to hazards, hazardous materials, and wildfire come from the CEQA Environmental Checklist. For Hazards and Hazardous Materials, the CEQA Checklist asks if the project would:

- Create a significant hazard to the public or the environment through the routine transport, use, or disposal of hazardous materials?
- Create a significant hazard to the public or the environment through reasonably foreseeable upset and accident conditions involving the release of hazardous materials into the environment?
- Emit hazardous emissions or handle hazardous or acutely hazardous materials, substances, or waste within one-quarter mile of an existing or proposed school?
- Be located on a site that is included on a list of hazardous material sites, compiled pursuant to *Government Code* Section 65962.5, and as a result would create a significant hazard to the public or the environment?
- For a project located within an airport land use plan or, where such a plan has not been adopted, within two miles of a public airport or public use airport, the project would result in a safety hazard or excessive noise for people residing or working in the project area?
- Impair implementation of or physically interfere with an adopted emergency response plan?
- Expose people or structures, either directly or indirectly, to a significant risk of loss, injury, or death involving wildland fires?

For wildfire, the CEQA Checklist asks, if located in or near SRAs or lands classified as very high-fire-hazard severity zones, if the project would do the following:

- Substantially impair an adopted emergency response plan or emergency evacuation plan?
- Expose project occupants to pollutant concentrations from a wildfire or the uncontrolled spread of a wildfire because of the surrounding slope, prevailing winds, and other factors that exacerbate wildfire risks?
- Require the installation or maintenance of associated infrastructure (such as roads, fuel breaks, emergency water sources, power lines or other utilities) that may exacerbate fire risk or that may result in temporary or ongoing impacts to the environment?

- Expose people or structures to significant risks, including downslope or downstream flooding or landslides, as a result of runoff, post-fire slope instability, or drainage changes?

11.3.2 Impacts

This section describes the hazards, hazardous materials, and wildfire impacts associated with the two plan concepts, mitigation measures for identified significant impacts, and the level of impact significance following implementation of the identified mitigation measures.

IMPACT 11-1	**Potential for Construction Activities to Expose the Public or the Environment to Hazardous Materials**. Construction of the proposed project may involve routine transport, use, and disposal of hazardous materials including fuels and petroleum-based fluids. Additionally, construction activities may result in exposure to contaminated soils during excavation activities. Therefore, project impacts would be **significant**.

Plan Concept 1

Sitewide.

Hazardous materials that are typically used during construction associated with the solid waste management operations at the WPWMA facility would require the transport, storage, and use of fuels, and other primarily petroleum-based fluids for the servicing and maintenance of vehicles and equipment. Hazardous materials used during construction may include acids, lime, glues, paints, solvents, and curing compounds.

An inadvertent spill of one or more of these hazardous materials could potentially occur during construction activities. An Emergency Response and Contingency Plan for WPWMA's existing facility is described in the facility's 2020 Hazardous Materials Business Plan. The Emergency Response and Contingency Plan includes emergency contacts, processes that are used to store/handle hazardous materials, a list of hazardous materials that are used, the quantities and locations of hazardous materials used, the notifications to be made in the event of a spill, the evacuation plan, spill containment and cleanup procedures, treatment procedures for injuries, and training for employees.

Additionally, as part of construction, a SWPPP (as discussed in Chapter 12, Hydrology) would implement BMPs to prevent releases of hazardous materials and contain and clean up any accidental releases that might occur. If hazardous wastes are transported onsite during construction, it would be transported in compliance with U.S. DOT, EPA, California Highway Patrol, and DTSC regulations. Impacts to the public and environment would be minimized with continued implementation of WPWMA's Hazardous Materials Business Plan, SWPPP, and compliance with local, state, and federal regulations.

However, even with implementation of the above measures for proposed expanded operations on the center property, the project is proposed to expand solid waste operations on the western and eastern properties where the risks associated with past agricultural practices are currently unknown. Construction on the western and eastern properties could result in the exposure or workers or the environment to soils that have been contaminated by prior agricultural operations. Due to the public health concerns associated with this exposure, this impact would be significant.

Complementary and Programmatic Elements.

In addition to solid waste elements complementary and programmatic may be developed on WPWMA properties. Under the project level, for Plan Concept 1, up to 300,000 square feet of building plus exterior infrastructure are reserved in the northern part of the western property for the complementary solid waste management elements. Under the programmatic level, for Plan Concept 1, up to 1.9 million square feet have been reserved for these elements primarily within the northern and southern extents of the western property, and on the center property. However, opportunities may arise that would support locating some of these complementary and programmatic elements nearer to the solid waste project elements or within areas not yet developed with solid waste project elements.

Construction activities associated with the project level of complementary elements include excavating for utilities and building foundations and grading for internal roadways and parking lots. These construction activities have the potential to expose contaminated soils. Therefore, construction of the project level of complementary elements may have a significant impact.

Build out of the programmatic elements involve the same construction activities identified for the project level. Construction of the additional programmatic elements (1.6 million sf) also have the potential to expose contaminated soils. Therefore, construction of the program level of complementary and programmatic elements may have significant impact.

Plan Concept 2

As described in Chapter 3, Project Description, the primary differences between Plan Concept 1 and Plan Concept 2 are related to where various facilities would be located on WPWMA's property and when various facilities would be developed. These differences do not change the conclusions identified for Plan Concept 1. As such, impacts associated with implementation of Plan Concept 2 would be the same as described for Plan Concept 1.

Mitigation Measure 11-1: Potential for Construction Activities to Expose the public or the environment to Hazardous Materials.

A Phase I ESA shall be prepared prior to the construction of any facilities on the western or eastern properties in general conformance with the ASTM E 1527-13 "Standard Practice for Environmental Site Assessments" and EPA "Standards and Practices for All Appropriate Inquires," 40 CFR Part 312. If existing hazardous materials contamination is identified in the Phase I ESA, and the Phase I ESA recommends further review, the WPWMA shall retain a Registered Environmental Assessor or other qualified professional to conduct follow-up sampling to characterize the contamination and to identify any required remediation that shall be conducted. Any remediation recommendations shall be implemented before earth disturbance in the vicinity of the contamination.

In addition, a construction hazardous materials management plan shall be prepared by the WPWMA or the WPWMA's construction-manager/contractor for all future development projects on the western and eastern properties and shall be incorporated into the construction and contract specifications for each project. The management plan shall include measures to reduce potential hazards to workers, the public, and the environment associated with use of hazardous materials and exposure to potentially contaminated soil during project construction. The management plan shall include provisions managing impacted materials, sampling and analytical requirements and disposal procedures. Specifically, the construction hazardous materials management plan shall:

- Describe the necessary actions to be taken if evidence of contaminated soil or groundwater is encountered during construction.
- Describe the types of evidence that could indicate potential hazardous materials contamination, such as soil discoloration, petroleum or chemical odors, or buried building materials.
- Include measures to protect worker safety if signs of contamination are encountered.
- Identify sampling and analysis protocols for various substances that might be encountered.
- List required regulatory agency contacts if contamination is found.
- Include recommendations on soil management in the event that aerially deposited lead is discovered in existing road right-of-way.
- Identify legal and regulatory processes and thresholds for cleanup of contamination.
- Include provisions for delineation, removal, and disposal of any contaminants identified as exceeding human health risk levels.
- Require that the project contractor verify that suspect soils are isolated, protected from runoff, and disposed of in accordance with Section 31303 of the *California Vehicle Code* and the requirements of the licensed receiving facility.

Level of Significance after Mitigation.

Implementation of these mitigation measures would reduce the potential for construction activities to expose the public or environment to hazardous materials and this impact would be reduced to a **less-than-significant** level.

IMPACT 11-2	**Potential for Solid Waste Operating Activities to release hazardous materials into the environment**. The project involves the increased delivery of waste materials to the site and the potential for hazardous waste to be illegally or accidentally delivered to the site in loads of municipal solid waste. Growth in the household hazardous waste stream would also be expected to result in greater quantities of household hazardous waste being processed at and stored on the site. With the continued implementation of the existing load-checking program, waste acceptance procedures, and compliance with the solid waste permitting requirements, impacts from the proposed project would be **less than significant**.

Plan Concept 1

The proposed project would continue to operate in conformance with the facility's permit conditions, and the project would implement additional practices to minimize the potential for hazardous wastes to commingle with solid waste loads through the placement of signage and through a load-checking program. Project personnel would continue to implement visual inspections at the scale house for obvious items that may be hazardous and that are not accepted at the site or should be directed to the HHW facility, such as the following:

- Adhesives/putties/fillers
- Asbestos-containing wastes
- Automotive products
- Cosmetics/medicines
- Gas cylinders (compressed)

- Cleaners/drain openers
- Waxes/polishes
- Paints/varnishes/lacquers
- Pesticides/herbicides/fertilizers
- Pool chemicals
- Roof coatings/cements
- Roofing tar
- Solvents/thinners/paint removers

The proposed project would continue to implement the load-checking program at the MRF and WRSL. Self-haul vehicles going to the MRF, public waste drop-off area, organics management area, or C&D processing area would be screened at one of the scale house areas. The load-checking program is intended to identify and remove hazardous and otherwise prohibited wastes from the waste stream prior to disposal. The staff at each scale house routinely question self-haul customers regarding the presence of household hazardous materials or unacceptable material in their loads, and the proposed project would continue to implement these screening procedures. The questioning of self-haul customers by scale house and other operating personnel may involve physical assessment of the product, inspection for warning labels such as "flammable" or "poison," and inspection for unidentified containers that may contain unacceptable wastes.

After screening the loads, the self-haul customers would be directed to the appropriate areas within each facility for unloading materials. The proposed project would continue to utilize spotters who would generally conduct load content surveillance near the unloading areas. Waste inspections would consist of a detailed examination of randomly selected loads consistent with the MRF and WRSL Solid Waste Facility Permits. If hazardous materials are found at the any of the waste receiving, processing, or disposal areas, they would be transported to and temporarily stored in a hazardous waste containment structure designed specifically for that purpose. Hazardous wastes would be stored for no longer than the time period allowed by State regulations (per Title 22, CCR, §66262.34(c)(1)). Licensed haulers would remove any hazardous waste encountered onsite.

The WPWMA has a CalEPA generator number for storage of hazardous/prohibited wastes in the onsite containment structure. Inspection records regarding the detection of hazardous waste, the training procedures for personnel, and the notification of hazardous waste required in Section 20870 of CCR Title 27 are maintained at the site. Records documenting the waste load-checking program are maintained at the site and submitted to regulatory agencies as required. The records are open to inspection during normal business hours. Inspection records by regulatory agencies are also kept at the facility. The proposed project would continue to implement these requirements for all future Waste Disposal and Waste Recovery operations. Because the proposed project would continue to operate in compliance with solid waste permitting requirements, Title 22 State regulations, and would also continue to implement practices such as the load-checking program, impacts from the proposed project are less than significant.

Plan Concept 2

As described in Chapter 3, Project Description, the primary differences between Plan Concept 1 and Plan Concept 2 are related to where various facilities would be located on WPWMA's property and when various facilities would be developed. As such, impacts related potential for exposure of the public or the environment to hazardous materials as a result of implementation of Plan Concept 2 would be the same as described for Plan Concept 1.

IMPACT 11-3	**Potential for landfill gas to accumulate in occupied structures.** The proposed project may result in migrating LFG intrusion within 1,000 feet of the landfill. Therefore, proposed project impacts would be **significant**.

Plan Concept 1

The landfill generates LFG that could potentially accumulate in occupied structures developed on WPWMA properties for the proposed project. WPWMA is required to comply with CCR Title 27 Section 22190, which states that all onsite construction within 1,000 feet of the boundary of any disposal area shall be designed and constructed to mitigate gas migration into a structure. These state standards are in place to minimize potential intrusion of migrating LFG into a structure. The protection measures identified in Title 27 Section 22190 are important for minimizing this potential public safety risk, and if these measures were not implemented for the proposed project, the project impacts could be significant.

Plan Concept 2

As described in Chapter 3, Project Description, the primary differences between Plan Concept 1 and Plan Concept 2 are related to where various facilities would be located on WPWMA's property and when various facilities would be developed. As such, impacts related potential for exposure of the public or the environment to hazardous materials as a result of implementation of Plan Concept 2 would be the same as described for Plan Concept 1.

Mitigation Measure 11-3: Potential for landfill gas to accumulate in occupied structures.

For any structure sited within 1,000 feet of the WRSL within the project's boundary, the following measures specified in CCR Title 27 Section 21190(g) shall be included:

- A geomembrane or equivalent system with low permeability to landfill gas shall be installed between the concrete floor slab of the building and subgrade.
- A permeable layer of open graded material of clean aggregate with a minimum thickness of 12 inches shall be installed between the geomembrane and the subgrade or slab.
- A geotextile filter shall be used to prevent the introduction of fines into the permeable layer.
- Perforated venting pipes shall be installed within the permeable layer and shall be designed to operate without clogging.
- The venting pipe shall be constructed with the ability to be connected to an induced draft exhaust system.
- Automatic methane gas sensors shall be installed within the permeable gas layer, and inside the building to trigger an audible alarm when methane gas concentrations are detected.

In addition, WPWMA shall use a qualified specialist to conduct periodic methane gas monitoring (pursuant to CCR Section 20920 et. seq.) inside all buildings and underground utilities.

Level of Significance after Mitigation.

Implementation of Mitigation Measure 11-3 would reduce the proposed project's potential impact to a **less-than-significant** level.

IMPACT 11-4	**Potential for Waste Relocation Activities to release hazardous materials into the environment**. The waste excavation and relocation component of the proposed project has the potential to expose onsite personnel or the environment to hazardous materials. Project impacts would be **significant**.

Plan Concept 1

As described in Chapter 3, Project Description, Plan Concept 1 includes excavating the contents of Modules 1, 2, 10, and 11, which encompass approximately 66 acres, and relocating these contents to a Subtitle D-compliant lined module within the permitted landfill footprint. Under Plan Concept 1, the duration of the waste excavation and relocation is estimated to occur over approximately 5 years, Waste relocation activities at the pre-Subtitle D area would include removal of leachate and landfill gas collection infrastructure, buried waste, soil cover, and as appropriate, any underlying soils already affected by a release from the landfill and potentially posing a threat to water quality or the environment. The estimated total volume of waste material within the pre-Subtitle D modules is 3,646,000 cubic yards (Golder Associates Inc. 2018). This includes final cover soils, Class III nonhazardous solid waste, and daily and interim soil cover. The Class III nonhazardous solid waste is assumed to include mixed municipal wastes, C&D debris, yard wastes and rubbish, and inert materials such as concrete and white goods (e.g., appliances) (Golder Associates Inc. 2018).

The WPWMA would require contractors performing waste excavation activities to be trained to observe the excavation process to identify any nonconforming waste materials, including hazardous waste, which would be sent offsite for proper handling and would not be relocated to an onsite landfill module for reburial. Trained personnel would also observe the exposed subgrade soils to identify any areas that may be affected by a release from the landfill (Golder Associates Inc. 2018).

Although it is anticipated that primarily MSW would be encountered, there is the potential for onsite personnel to encounter hazardous waste during the waste relocation activities. The expose onsite personnel or the environment to hazardous wastes associated with these waste relocation activities would be a significant impact.

Plan Concept 2

As described in Chapter 3, Project Description, the primary differences between Plan Concept 1 and Plan Concept 2 are related to where various facilities would be located on the WPWMA's property and when various facilities would be developed. Under Plan Concept 2, the duration of waste excavation and relocation would be conducted over a shorter period of time (a total of approximately 3 years) than Plan Concept 1. As such, impacts related potential for exposure of the public or the environment to hazardous materials as a result of implementation of Plan Concept 2 would be the same as described for Plan Concept 1.

Mitigation Measure 11-4: Potential for Waste Relocation Activities to release hazardous materials into the environment.

As described in Chapter 3, Project Description, prior to commencing waste relocation activities, the WPWMA shall develop and implement a contingency plan in case hazardous wastes are encountered during waste relocation. The contingency plan shall be based on guidelines issued by the State of California Governor's Office of Emergency Services (CA OES 2001) for preparation of a Hazardous Material

Incident Contingency Plan that describes emergency procedures and actions to be implemented to minimize hazards and release hazardous materials.

Level of Significance after Mitigation.

Implementation of Mitigation Measure 11-4 would reduce the proposed project's impact associated with waste relocation activities to **less than significant**.

IMPACT 11-5	**Potential Conflict with an Adopted Emergency Response Plan.** The proposed project is not expected to conflict with implementation of an adopted emergency response plan. However, construction activities on local roadways may require temporary lane closures that could delay emergency evacuation. This impact would be **significant**.

Plan Concept 1

Sitewide.

An Emergency Response and Contingency Plan for the WPWMA facility is described in the facility's 2020 Hazardous Materials Business Plan. The Emergency Response and Contingency Plan includes the emergency contacts, processes that are used store/handle hazardous materials, a list of hazardous materials that are used, the quantities and locations of hazardous materials used, the notifications to be made in the event of a spill, the evacuation plan, spill containment and cleanup procedures, treatment procedures for injuries, and training for employees. Because the solid waste elements of the proposed project would not substantially differ from the solid waste activities that currently occur at the site, the proposed project would not be expected to conflict with the facility's Emergency Response and Contingency Plan.

The proposed project is not expected to impair implementation of, or physically interfere with, the Placer County emergency response plan or emergency evacuation plan. SR-65 is a major evacuation route near the project area. The proposed project would not be expected to have any effect on the use of SR-65 for emergency evacuations.

During construction activities, temporary lane closures may be necessary on Fiddyment Road and Athens Avenue. These lane closures could result in temporary increases in traffic levels as traffic is detoured or slowed on some local roadways. Increased traffic congestion on Fiddyment Road and Athens Avenue during construction would be temporary and would not interfere with the use of surrounding roadways, including SR-65, for emergency evacuation. However, localized delays in emergency evacuation could occur. Substantial delays in emergency evacuation associated with project construction activities on local roadways would be considered a significant impact.

Complementary and Programmatic Elements.

In addition to solid waste elements, complementary and programmatic elements may be developed on WPWMA properties. Under the project level, for Plan Concept 1, up to 300,000 square feet of building plus exterior infrastructure is reserved in the northern part of the western property for the complementary solid waste management elements. Under the programmatic level, for Plan Concept 1, up to 1.9 million square feet has been reserved for these elements primarily within the northern and southern extents of the western property, and on the center property. However, opportunities may arise that would support locating some of these complementary and programmatic elements nearer to the solid waste project elements or within areas not yet developed with solid waste project elements.

Development of the project level of complementary elements would be in accordance with WPWMA's Emergency Response and Contingency Plan or a separate site-specific individual emergency response plan. The complementary elements are not expected to interfere with Placer County's emergency and evacuation plans. Temporary lane closures associated with construction of these elements could cause or contribute to temporary increases in traffic levels but would not interfere with the use of surrounding roadways, including SR-65, for emergency evacuation. However, localized delays in emergency evacuation could occur. Substantial delays in emergency evacuation associated with complementary element construction activities on local roadways would be considered a significant impact.

Build out of the programmatic elements involve the same construction activities identified for the project level. Development of the additional programmatic elements (1.6 million square feet) may also result in localized delays in emergency evacuation. Therefore, impacts associated with development of the program level of complementary and programmatic elements could be significant.

Plan Concept 2

As described in Chapter 3, Project Description, the primary differences between Plan Concept 1 and Plan Concept 2 are related to where various facilities would be located on WPWMA's property and when various facilities would be developed. These differences do not change the conclusions identified for Plan Concept 1. As such, impacts related to conflicts with an adopted emergency response plan as a result of implementation of Plan Concept 2 would be the same as described for Plan Concept 1.

Mitigation Measure 11-5: Prepare a Construction Traffic Management Plan.

Before construction activities commence, the WPWMA shall prepare a Construction Traffic Management Plan to minimize traffic impacts on all roadways at and near the work site affected by construction activities. The plan shall identify construction and public (if applicable) access points, procedures for notification of lane closures, a construction materials delivery plan, and a description of emergency personnel access routes during lane closures. This plan shall include measures that provide adequate access for emergency evacuation, including maintaining bypass lanes around any roadway construction sites.

Level of Significance after Mitigation.

Implementation of Mitigation Measure 11-5 would reduce the proposed project's potential impact on an adopted emergency response plan to a **less-than-significant** level.

IMPACT 11-6	**Risk of Wildfire.** The proposed project is not located in an area of substantial wildfire risks or hazards and would not be expected to increase risks associated with wildfire. The expanded solid waste operations would include specific operational procedures that would minimize the potential for wildland fires to be started on the site. Also, the compatible/programmatic uses would be subject to applicable regulations that would minimize wildfire risks. Therefore, project implementation would have a **less-than-significant** impact on wildfire risk.

Plan Concept 1

Sitewide.

Areas at risk for wildfires are designated by CalFire and include lands with characteristics of dense vegetation where severe burning potential is present. As described in the Environmental Setting Section, there are no lands in the vicinity of the proposed project that are categorized by the County or CalFire as either (1) wildland areas that may contain substantial forest fire risks and hazards (wildland areas or SRA) or (2) very high-fire-hazard severity zones. As described in the Placer County LHMP Update, parts of the site are located within a moderate fire hazard zone, and the project area is at risk to smaller grassfires, especially during the dry, hot summers. To minimize hazards associated with potential grassfires, the WPWMA implements practices of vegetation clearing, storage of water nearby vegetated areas, and stockpiling soil that can be used to extinguish small grass fires. In addition, fire safety practices onsite would be implemented in accordance with Cal/OSHA standards as discussed in Section 11.2.2. Cal/OSHA requires mandatory site safety plans that may include emergency response and fire prevention plan preparation.

Because the proposed project would comply with Cal/OSHA fire standards and would implement the WPWMA's Emergency Response and Contingency Plan including practices that minimize wildfire hazards, people or structures would not be subject to the risk of loss, injury, or death involving wildland fires, and impacts would be less than significant.

The proposed project includes the construction or expansion of structures and infrastructure at the site. Solid waste material contains combustible components and the operation of solid waste facilities can result in fire risks. The introduction of new or expanded structures and the expansion of solid waste operations at the site could increase this risk.

Fire risks at solid waste facilities are largely associated with the following:

- Equipment-sparked fire caused by faulty electrical connections
- Ignition of collected refuse or dry vegetation on or near the equipment
- Smoldering refuse occasionally brought into the facility by the haul trucks
- Uncontrolled fires within the compost or landfill (could trigger grass fires)
- Fuel stored on the site that may be ignited
- Crushed or damaged batteries (particularly lithium-ion type batteries) inappropriately disposed of within the waste stream
- Careless smokers

However, operating procedures and design features at the facility greatly reduce the potential for fire to be started at the site and to spread onto adjacent grasslands. These operating procedures include the application of daily and interim cover at the landfill; implementation of a hazardous waste screening program; implementation of an equipment maintenance program; and implementation of design, safety, training, and reporting measures specified in the facility's hazardous materials management plan. In addition, the potential for onsite fire to spread to adjacent grasslands is reduced by the availability of stored water, stockpiled soil, an engineered fire suppression system in the MRF building, and equipment on the site that can be used to extinguish or contain small fires, as well as the maintenance of firebreaks. For these reasons, the expanded solid waste facilities would not be expected to exacerbate wildfire risk or result in temporary or ongoing impacts to the environment.

Additionally, the proposed project would not expose people or structures to significant risks resulting from downslope or downstream flooding or landslides from runoff, post-fire slope instability, or drainage

changes. As discussed in Chapter 12, Hydrology, the proposed project would implement project-specific SWPPPs that would include BMPs to prevent runoff or flooding that could alter or otherwise affect existing drainage patterns. Therefore, the potential for post-fire instability resulting in downslope runoff and flooding would be low. Therefore, implementation of the project's solid waste elements would have a less-than-significant impact on wildfire risk.

Complementary and Programmatic Elements.

In addition to solid waste elements, complementary and programmatic elements may be developed on the WPWMA's properties. Under the project level, for Plan Concept 1, up to 300,000 square feet of building space plus exterior infrastructure is reserved in the northern part of the western property for the complementary solid waste management elements. Under the programmatic level, for Plan Concept 1, up to 1.9 million square feet of building space has been reserved for these elements primarily within the northern and southern extents of the western property, and on the center property. However, opportunities may arise that would support locating some of these complementary and programmatic elements nearer to the solid waste project elements or within areas not yet developed with solid waste project elements.

Development of the project level of complementary elements would be subject to the CCR Fire Code. The Fire Code contains regulations relating to construction, maintenance, and use of buildings and provides guidance on emergency access, access gates, sprinkler systems, fire alarms within buildings, and construction of access roads to accommodate fire responders. Compliance with these regulations would substantially reduce the potential that the complementary elements would contribute to wildland fire risks. For these reasons, and the fact that the project site is not located within a wildland area that may contain substantial wildfire risks and hazards or a very high-fire-hazard severity zone, the risk of wildfires associated with the complementary elements would be less than significant.

Build out of the programmatic elements also involve compliance with the CCR Fire Code. Development of the additional programmatic elements (1.6 million square feet) would not be located within a wildland area that may contain substantial wildfire risks and hazards or a very high-fire-hazard severity zone, therefore risk of wildfires associated with the programmatic elements would be less than significant.

Plan Concept 2

As described in Chapter 3, Project Description, the primary differences between Plan Concept 1 and Plan Concept 2 are related to where various facilities would be located on WPWMA's property and when various facilities would be developed. These differences do not change the conclusions identified for Plan Concept 1. As such, impacts related to wildfire risk as a result of implementation of Plan Concept 2 would be the same as described for Plan Concept 1.

IMPACT 11-7	**Risk of Vectors.** The proposed project operations have the potential to attract vectors, particularly mosquitoes within areas of standing water, which can increase exposure of the public to vector-borne diseases. An increased risk of health hazards from vector-borne diseases would be **significant**.

Plan Concept 1

Sitewide.

At the existing landfill site, vector problems are currently reduced by the covering of waste with daily soil cover or alternative daily cover and regular trash pickup (Golder Associates 2017). After rain where possible, WRSL staff patrol and drain areas that could collect standing water and provide mosquito-breeding areas. All areas that could potentially hold water are inspected weekly for mosquito larvae during rainy periods. Additionally, the site implements a bird control program that involves bird bomb and whistler cartridges to keep birds away from the site. Rodents have not previously been a problem at the landfill site. Measures to reduce vectors at the MRF and compost areas include processing mixed waste within 48 hours, cleaning of the facility on a daily basis, daily sweeping and washing of work areas, daily cleaning of all pits within the MRF, daily monitoring of salvaged material and stockpiled material, and use of a pest control company to control flying insects and rodents.

The proposed project expansion would require the WPWMA to implement a broader vector program that covers the western and eastern properties, in addition to the expanded activities on the central property. The western and eastern properties provide a greater potential for vectors (specifically mosquitoes) to occur due to the presence of aquatic resources that may be disturbed during construction and operation (as discussed in Chapter 3 Biological Resources). The disturbance of these aquatic resources could increase areas of standing water, which would increase breeding areas for mosquitoes. Therefore, the potential exposure of the public to health hazards from vector-borne diseases would be significant.

Complementary and Programmatic Elements.

In addition to solid waste elements, complementary and programmatic elements may be developed on the WPWMA's properties. Under the project level, for Plan Concept 1, up to 300,000 square feet of building plus exterior infrastructure is reserved in the northern part of the western property for the complementary solid waste management elements. Under the programmatic level, for Plan Concept 1, up to 1.9 million square feet has been reserved for these elements primarily within the northern and southern extents of the western property, and on the center property. However, opportunities may arise that would support locating some of these complementary and programmatic elements nearer to the solid waste project elements or within areas not yet developed with solid waste project elements.

Development of the project level of complementary elements and the programmatic elements (additional 1.6 million square feet) would require the WPWMA to implement a broader vector program that covers the western and eastern properties. The western and eastern properties provide a greater potential for vectors (specifically mosquitoes) to occur due to the presence of aquatic resources that may be disturbed during construction and operation. Therefore, development of the complementary and programmatic elements may result in significant impacts.

Plan Concept 2

As described in Chapter 3, Project Description, the primary differences between Plan Concept 1 and Plan Concept 2 are related to where various facilities would be located on the WPWMA's property and when various facilities would be developed. These differences do not change the conclusions identified for Plan Concept 1. As such, impacts related to vector hazards as a result of implementation of Plan Concept 2 would be the same as described for Plan Concept 1.

Mitigation Measure 11-7: Risk of Vectors.

During construction, all grading shall be performed by contractors in a manner to prevent the occurrence of standing water or other areas suitable for breeding of mosquitoes and other vectors. The Placer Mosquito and Vector Control District shall be granted access to perform vector control both during construction and operation of the proposed project. This includes ongoing access to all common areas including drainages. As part of the access agreement with Placer Mosquito and Vector Control District, the WPWMA shall require that the district use appropriate vector control methods in biologically sensitive areas to minimize any potential adverse effects to sensitive wildlife and plant species or their habitat.

Level of Significance after Mitigation.

Implementation of Mitigation Measure 11-7 would reduce the proposed project's potential impact from vectors to a **less-than-significant** level.

11.4 References

Anchor Point Wildland Fire Solutions, 2012. Placer County Community Wildfire Protection Plan, December.

California Department of Toxic Substances Control (DTSC). 2020. Envirostor website (https://www.envirostor.dtsc.ca.gov/public/). Accessed December 2020.

California Department of Forestry and Fire Protection (CalFire). 2020. CalFire Mission Summary. https://www.fire.ca.gov/about-us/. December 14.

ENGEO 2013

Golder Associates. 2017. *Fourth Quarter and Annual 2016 Monitoring Report*

Golder Associates. 2018 *Geotechnical Exploration Report, Proposed Expansion of Western Regional Sanitary Landfill.* August.

Google Earth. 2021. Aerial imagery from selected dates between 1993 and 2021. https://www.google.com/earth/.

McClellan Air Force Base (AFB). 1992. *McClellan AFB Comprehensive Land Use Plan*. January.

Nortech. 2020. *Hazardous Materials Business Plan for the WPWMA Materials Recovery Facility.* January.

Placer County 2013. *Placer County General Plan, Countywide General Plan Policy Document*. May 21. Update Approved by Board of Supervisors May 21, 2013.

Placer County Transportation Planning Agency. 2014. *Chapter 6 – Lincoln Regional Airport Policies and Maps*. March 31.

Placer County Department of Emergency Services 2017. *2017 Placer County Emergency Operations Plan*. Draft.

Placer County. 2019. *Sunset Area Plan / Placer Ranch Specific Plan Final Environmental Impact Report*. State Clearinghouse #2016112012. October. Prepared by Ascent Environmental, Sacramento, CA.

Placer County. 2021. *Local Hazard Mitigation Plan Update*. May. Public Review Draft.

Placer County. 2021. Office of Emergency Services. https://www.placer.ca.gov/1371/About-OES. Accessed July 23, 2021.

SCS Engineers. 2019. *Engineering Feasibility Study Western Regional Sanitary Landfill Placer County, California*. December 13.

SCS Engineers. 2020. *Second Quarter 2020 Monitoring Report, Western Regional Sanitary Landfill, Placer County, California*. July 31, 2020.

State Water Resources Control Board (SWRCB). 2020. GeoTracker website (https://geotracker.waterboards.ca.gov/). Accessed December 2020.

12. Hydrology and Water Quality

This chapter describes existing hydrology and water quality in the proposed project study area and evaluates the potential impacts on hydrology and water quality from implementing Plan Concept 1 and Plan Concept 2 of the Renewable Placer: Waste Action Plan.

12.1 Environmental Setting

The project site is located on gently rolling terrain at the base of the Sierra Nevada foothills. Pre-Western Regional Sanitary Landfill (WRSL) development elevations ranged from approximately 106 feet above mean sea level (AMSL) in the southwestern corner of the site to about 134 feet above AMSL at the center of the site. Currently, the primary topographic feature on the site is the existing WRSL (Figure 9-1). Elevations within the WRSL footprint range from approximately 57 feet AMSL at the lowest point (excavated areas) to approximately 196 feet AMSL at filled areas (Golder 2017). The area surrounding the project site is characterized by open space and agricultural uses (irrigated land and grazing).

The climate at the project site is characterized by dry summers and mild winters (MBI 2015). The mean annual temperature for a climate station near the project site is approximately 60 degrees Fahrenheit (°F) annually, with a record high of 115°F in June 1961 and a record low of 18°F in December 1990. Temperature and precipitation data have been recorded since 1941 at the Sacramento International Airport weather station located approximately 12 miles west of the project site. Precipitation is highly variable in the area. Summers are often completely dry, and there are frequently periods of 4 to 5 months with little or no rain. In the winter, storms from the Pacific Ocean sweep across the coast bringing rain to the valley and mountains. The mean annual rainfall for the site is 17.24 inches measured at the Sacramento International Airport. Most of the rainfall occurs between November and April (MBI 2015).

12.1.1 Methodology

This evaluation of hydrology and water quality is based on the following documents prepared by MBI and SCS Engineers (SCS), plans for the proposed project, compliance with applicable regulations, and other applicable information:

- Final Environmental Impact Report (EIR), Sunset Area Plan/Placer Ranch Specific Plan (Placer County 2019)
- Stormwater Pollution Prevention Plan (SWPPP), Western Placer Waste Management Authority (WPWMA) (MBI 2015)
- Engineering Feasibility Study, Western Regional Sanitary Landfill, Placer County, California (SCS 2019)
- Fourth Quarter and Annual 2019 Monitoring Report, Western Regional Sanitary Landfill, Placer County, California (SCS 2020a)
- Second Quarter 2020 Monitoring Report, Western Regional Sanitary Landfill, Placer County, California (SCS 2020b)
- WPWMA Waste Discharge Requirements (WDRs) Order Number (No.) R5-2007-0047 (WDR Order)(CVRWQCB 2007)

12.1.2 Regional Setting

From a regional hydrologic perspective, the project site is located within the Upper Coon-Upper Auburn Watershed Hydrologic Unit Code (HUC) No. 1802017 defined by the U.S. Geological Survey (2020). The project site overlies California HUC No. 12, including the eastern part of the Dutch Ravine-Auburn Ravine Subwatershed No. 180201610102, the western part of the Orchard Creek Subwatershed No. 180201610101, and the northern part of the Pleasant Grove Creek Subwatershed No. 180201610302 as defined by the National Resources Conservation Service (U.S. Department of Agriculture 2020).

An unnamed tributary to Auburn Ravine drains the western part of the project site area to the northwest. Auburn Ravine is northwest of the project site and flows west as part of the Dutch Ravine-Auburn Ravine Subwatershed, joining North Canal in Sutter County, which flows into Natomas Cross Canal and ultimately into the Sacramento River. Under natural conditions, Auburn Ravine functions as an intermittent stream with high winter and spring flows that slow to a trickle or disappear entirely during the summer and fall. Over the past 150 years, the hydrology of Auburn Ravine has been modified to include flows from the City of Auburn's wastewater treatment plant, Pacific Gas & Electric Company's (PG&E's) Wise Powerhouse, and summer input from the Bear, Yuba, and American rivers by the Nevada Irrigation District, Placer County Water Agency (PCWA), and PG&E. These discharges create abnormally high spring and summer flow conditions. Flows range from less than 3 cubic feet per second (cfs) during fall to an estimated 14,000 cfs during 100-year winter storm events. At the end of the irrigation season (October 15), the Wise Powerhouse is shut down for maintenance for 2 to 6 weeks. During this time, flow in Auburn Ravine above Orchard Creek depends almost entirely on discharge from the Auburn wastewater treatment plant (Placer County 2019).

An unnamed tributary to Orchard Creek drains the northern part of the project site area to the northwest. The Orchard Creek Subwatershed is a large tributary watershed that begins 3 miles southeast of Lincoln, California, and joins the Auburn Ravine watershed northwest of the project site area. Roughly 40 percent of the Orchard Creek watershed is covered by urban development. Although the creek would be intermittent under natural conditions, it now flows perennially because of discharges from urban runoff and contributions from the Thunder Valley Casino Resort wastewater treatment plant (Placer County 2019).

An unnamed tributary to University Creek drains the western part of the project site area to the south. University Creek flows west as a tributary to Pleasant Grove Creek. The Pleasant Grove Creek Subwatershed begins southeast of the project site area, near the Whitney Oaks Golf Club, roughly halfway between Rocklin and Lincoln. The creek flows into the Pleasant Grove Creek Canal, which empties into Cross Canal and ultimately into the Sacramento River. The upper (southern and eastern) reaches of the watershed are heavily developed and include parts of the cities of Roseville and Rocklin. Pleasant Grove Creek and its tributary channels were historically intermittent streams that dried in summer; however, many of the channels now have perennial flows from urban runoff, agricultural irrigation return flows, and contributions from the Pleasant Grove Wastewater Treatment Plant. University Creek is a tributary of Pleasant Grove Creek that drains the project site area (Placer County 2019).

The project site is also located in the Region 5 Sacramento Hydrologic Basin, Valley-American Hydrologic Unit No. 519.00, Coon-American Hydrologic Area No. 519.20, and Pleasant Grove Hydrologic Subarea No. 519.22 as designated by the Central Valley Regional Water Quality Control Board (CVRWQCB) (2018). Water bodies within the basins of CVRWQCB Region 5, including those within the Sacramento Hydrologic Basin, that do not have beneficial uses specifically designated in Table 2-1 of the Basin Plan (CVRWQCB 2018) are assigned municipal and domestic water supply designations.

The project site is also located in Sacramento Valley Groundwater Basin No. 5-021 and North American Subbasin No. 5-021.64 as designated by the California Department of Water Resources (DWR 2016). The North American Subbasin encompasses 548 square miles bounded on the west by the Feather and Sacramento rivers, on the north by the Bear River, on the south by the American River, and on the east by the Sierra Nevada (DWR 2006; 2016). The western part of the American Subbasin where the project site is located is a nearly flat flood basin for the Bear, Feather, Sacramento, and American rivers, and several small eastern side tributaries, with a general direction of drainage to the west-southwest at an average grade of approximately 5 percent (DWR 2006). Groundwater flows primarily toward the southwest, generally following surface topography trends (Placer County 2019). Abundant groundwater is pumped from the basin, both regionally and locally (MBI 2015). The average aquifer-specific yield of the North American Subbasin calculated for an assumed aquifer thickness of 200 feet is 7 percent, with water well yields ranging up to 2,500 gallons per minute for municipal and irrigation supply wells (DWR 2006). The Sacramento Groundwater Authority is a joint powers authority (JPA) responsible for the protection of the regional groundwater basin within Sacramento County north of the American River and adopted a groundwater management plan on December 11, 2003 (DWR 2006).

As described by CVRWQCB (2018), all groundwater in CVRWQCB Region 5, including Sacramento Valley Groundwater Basin No. 5-021, is considered as suitable or potentially suitable, at a minimum, for municipal and domestic water supply, agricultural supply, industrial service supply, and industrial process supply. As described by Placer County, groundwater quality in the part of the aquifer within approximately 600 feet of ground surface is generally considered suitable for drinking. However, a comparison of groundwater quality data with applicable water quality standards and guidelines for drinking water and irrigation water found high levels of total dissolved solids, salts, chloride, bicarbonate, boron, fluoride, nitrate, iron, manganese, and arsenic in some locations of the North American Subbasin (Placer County 2019).

National Wetland Inventory Mapping at the project site is shown on Figure 12-1. The project site includes drainages in the northwestern, eastern, and southern portions of the site classified as Freshwater Emergent Wetland and Riverine. The U.S. Fish and Wildlife Service (USFWS) (2020) indicates the Northern Prairie Wildlife Research Center definition of the Emergent Wetland Class is characterized by erect, rooted, herbaceous hydrophytes, excluding mosses and lichens. This vegetation is present for most of the growing season in most years, and the wetlands are usually dominated by perennial plants. USFWS (2020) also indicates the Northern Prairie Wildlife Research Center definition of the Riverine System includes all wetlands contained within a channel except wetlands dominated by trees, shrubs, persistent emergent, emergent mosses, or lichens. Aquatic resources at the project site are discussed in detail in Section 7.1.5.3.

As shown on Figure 12-2, none of the project site is within a designated flood hazard zone, as classified by the Federal Emergency Management Agency (FEMA). The project site is not located within the estimated flood boundaries for the 100-year flood event, based on the Flood Insurance Rate Map prepared by FEMA (1998, as referenced in MBI 2015).

12.1.3 Local Setting

Solid waste management activities occur on the WPWMA's 314-acre center property, as described in Chapter 1. The center property includes the existing Material Recovery Facility (MRF) building, organics management operation, construction and demolition materials processing area, public waste drop-off area, household hazardous waste facilities, Western Regional Sanitary Landfill (WRSL), stormwater ponds, scale house facilities, landfill gas-to-energy plant, site entrance infrastructure, and a PG&E transmission line easement. The project also includes the approximately 155-acre eastern property, which is currently leased by the WPWMA to a private entity for cattle grazing and is not currently permitted for solid waste

operations; and the approximately 459-acre western property, part of which is currently leased to the City of Lincoln for discharge of reclaimed water and a part of which is leased for model airplane operations. The WRSL is operated under a permit from the California Regional Water Quality Control Board (RWQCB), Central Valley Region. It is currently operating under WDR Order No. R5- 2007-00047 (issued May 4, 2007), in conformance with *California Code of Regulations* Title 27, and Order 93-200, which implements State Water Resources Control Board Resolution No. 93-62 and federal municipal solid waste regulations.

Stormwater Management at WPWMA

Stormwater at the WRSL and MRF is managed in accordance with WDR Order No. R5-2007-0047 and Industrial General Permit (IGP) 2014-0057-DWQ issued by the CVRWQCB, respectively. The WPWMA SWPPP, prepared for the WRSL and MRF, in accordance with the WDRs and IGP (but attached to the IGP), implements measures designed to manage rainfall at the WPWMA's facilities. Class III landfill units are required to be designed to manage a 100-year, 24-hour storm event, and Class II landfill units must be designed to manage a 1,000-year, 24-hour event. The WDRs list the 1,000-year, 24-hour event as 6.0 inches of rain (CVRWQCB 2002; 2007).

The WPWMA SWPPP (MBI 2015) describes stormwater drainage for the WRSL, including both active landfill areas and covered areas (including areas covered with vegetation, soil cover, and temporary erosion protection). Stormwater from covered areas of the WRSL sheet flows into vegetated drainage swales and is discharged from points at the northeastern and southwestern corners of the WRSL as shown on Figure 12-3 (MBI 2015). The receiving water for stormwater discharges from the north of the WRSL is Orchard Creek, located 1.28 miles north of the WRSL northern boundary. The receiving water for stormwater discharges from the south of the WRSL is Pleasant Grove Creek, located 1.87 miles south of the WRSL southern boundary. Surface water in the area of the project site drains to the north to Orchard Creek and to the south to Pleasant Grove Creek, as shown on Figure 12-4 (MBI 2015). Both of these creeks eventually flow into the Sacramento River. Orchard and Pleasant Grove Creeks consist of intermittent streams that are primarily used for agricultural purposes.

The WPWMA SWPPP (MBI 2015) describes the MRF stormwater drainage system, which is designed for a 10-year, 24-hour storm. The MRF stormwater drainage map, as depicted in the WPWMA SWPPP, is shown on Figure 12-5. Stormwater runoff at the MRF flows by variations in surface grades to two stormwater ponds, bypassing the compost operations areas, which have separate drainage systems. During low flows, the MRF drainage system directs flow to the Stormwater Quality Pond (SWQP), an earthen sedimentation basin. The SWQP detains runoff for settling of sediments and for vegetation to absorb contaminants. When the water gathers to a depth of 3 to 4 feet, runoff occurs through the SWQP outlet, which includes an 8-inch pipe connecting the SWQP and the stormwater discharge pond. A control valve on this outlet makes isolation of water in the SWQP possible, if necessary.

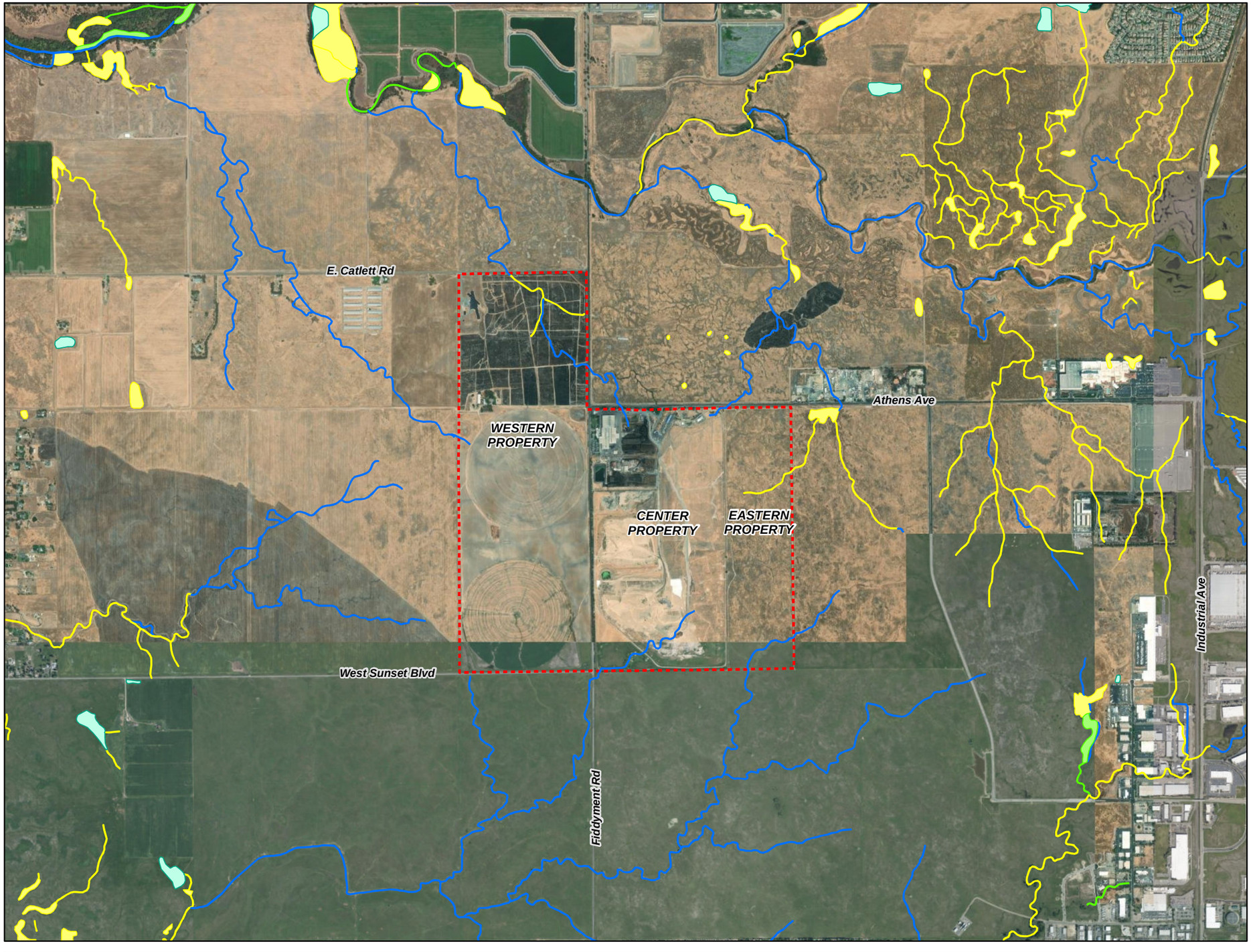

LEGEND

Project Boundary

National Wetlands Inventory

- Freshwater Emergent Wetland
- Freshwater Forested/Shrub Wetland
- Freshwater Pond
- Riverine

Source: U.S. Fish and Wildlife Service, National Wetlands Inventory, accessed December 2020.

N

0 2,000 4,000

Feet

Figure 12-1. National Wetlands Inventory
Draft Environmental Impact Report
Renewable Placer: Waste Action Plan
Placer County, California

Jacobs

\\Dc1vs01\gisproj\W\WPWMA\Maps\Report\EIR\Geology\NWI_201221.mxd 7/29/2021

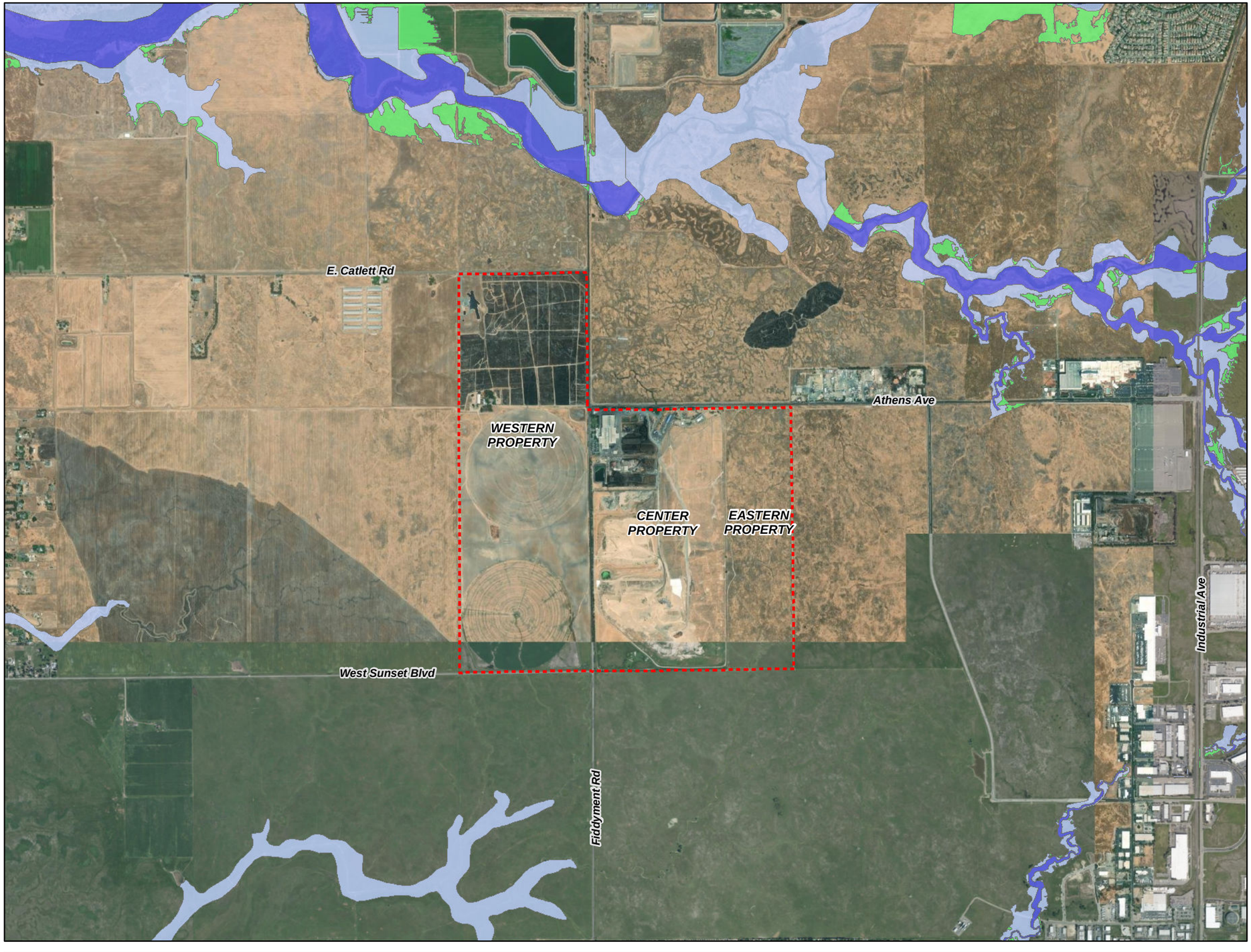

LEGEND

Project Boundary

Flood Hazard Zones

Special Flood Hazard Area - 1% Annual Chance Flood

Special Flood Hazard Area - Regulatory Floodway

0.2% Annual Chance Flood Hazard

Areas Determined to be Outside the 0.2% Annual Chance Floodplain

Source: FEMA National Flood Hazard Layer, accessed December 2020.

N

0 2,000 4,000

Feet

Figure 12-2. FEMA Flood Zones
Draft Environmental Impact Report
Renewable Placer: Waste Action Plan
Placer County, California

Jacobs

\\dc1vs01\GISProj\W\WPWMA\Maps\Report\EIR\Geology\FEMA_201221.mxd 7/21/2021

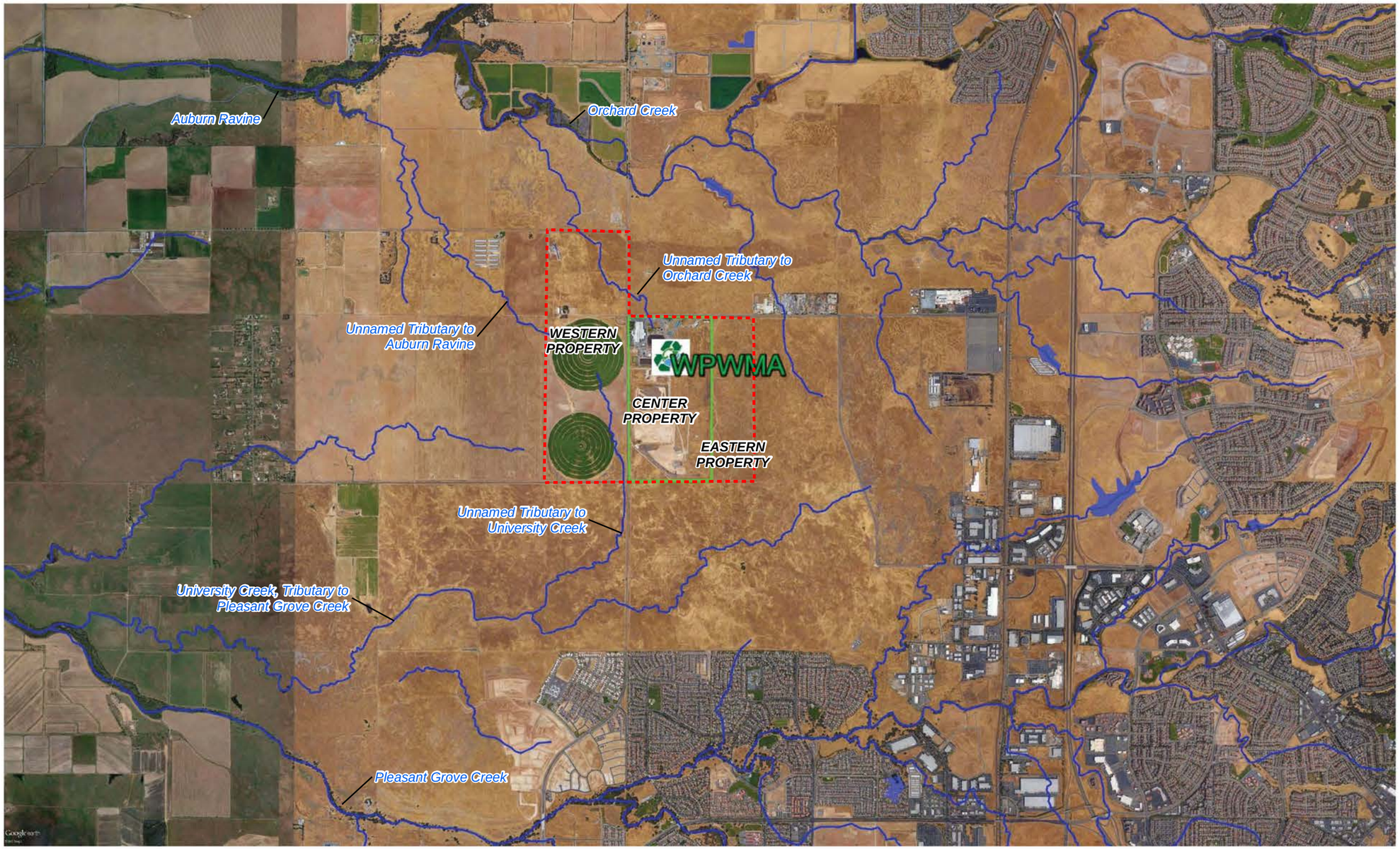

Sources:
1. Michael Baker International, 2015. Stormwater Pollution Prevention Plan, Western Placer Waste Management Authority. January 31.
2. Ascent Environmental, 2019. Final Environmental Impact Report, Sunset Area Plan/Placer Ranch Specific Plan. Prepared for Placer County. October.

Figure 12-3. Surface Water Bodies in Project Site Vicinity
Draft Environmental Impact Report
Renewable Placer: Waste Action Plan
Placer County, California

Jacobs

Source: Michael Baker International, 2015. Stormwater Pollution Prevention Plan, Western Placer Waste Management Authority. January 31.

Figure 12-4. Existing Stormater Management Map (Center Property)
Draft Environmental Impact Report
Renewable Placer: Waste Action Plan
Placer County, California

Jacobs

\\dc1vs01\GISProj\W\WPWMA\Maps\Report\EIR\Geology\Storm_Water_201221.mxd 7/21/2021

LEGEND

- Storm Water Discharge Point
- Approx. Facility Boundaries
- SW Flow Direction
- Approx. MRF Area
- Area Discharges to Storm Water Pond 1
- Discharges to Containment Ponds 3& 4
- Discharges to Storm Water Quality Pond 2
- Ponds
  - 1 Storm Water Quality Pond
  - 2 Water Quality Pond
  - 3 Compost Leachate Pond – North
  - 4 Compost Leachate Pond - South

N

(not to scale)

Source: Michael Baker International, 2015. Stormwater Pollution Prevention Plan, Western Placer Waste Management Authority. January 31.

Figure 12-5. MRF Drainage Map
Draft Environmental Impact Report
Renewable Placer: Waste Action Plan
Placer County, California

Jacobs

During high flows, runoff may bypass the SWQP via a drainage inlet that discharges runoff through an 18-inch line into the southwestern corner of the stormwater discharge pond. High flows may continue to fill the SWQP, and when the pond water surface level reaches 118 feet AMSL, the water will flow over a spillway into the stormwater discharge pond. The high water will flow through a 30-inch line directly to the stormwater discharge pond. Water in the stormwater discharge pond may continue to accumulate until reaching 118 feet AMSL when it flows into a concrete outlet structure and enters two 30-inch pipelines discharging from the site and to a drainage swale north of Athens Avenue.

Leachate from compost operations areas flows to the compost leachate ponds as shown on Figure 12-5, where it percolates (northern compost pond only), evaporates, or is pumped for reuse as windrow water. According to its design, the compost leachate control system has capacity to contain leachate generated during a 100-year, 24-hour storm or the wettest year of record, with no discharge. The northern compost pond is scheduled for replacement and upgrades in fall 2021 as required under the CVRWQCB Composting General Order and will contain runoff from the average annual precipitation plus 0.7 times the standard deviation (approximately 30.56 inches of rain) plus the runoff from a 25-year, 24-hour storm (3.95 inches).

The outdoor nonoperational part of the Waste Recovery operations (approximately 19 acres) is designed to prevent erosion. The western and northern boundaries of the Waste Recovery areas are landscaped with turf grass and trees as a means of erosion control. The rest of the unpaved areas inside the boundary of the improved area are included in the stormwater collection system to the northern and eastern sides of the northern compost pad. The balance of the unimproved area of the MRF has grass on it and is sloped in such a manner that it carries water to a drainage swale along the southern and eastern boundary of the improved MRF. This swale collects water before entry to the improved portion of the property and diverts it to the stormwater discharge pond along with other water entering from off property to the east and south of the MRF building. When the stormwater discharge pond reaches its capacity, it allows the water to run off through the two 30-inch-diameter storm drain culverts as described earlier.

Stormwater Monitoring

The existing SWPPP (MBI 2015), which covers the WRSL and MRF activities, is designed to comply with the California State Water Resources Control Board's (SWRCB's) General Permit for Storm Water Discharges Associated with Industrial Activities, IGP Order No. 2014-0057-DWQ, National Pollutant Discharge Elimination System (NPDES) General Permit No. CAS000001 adopted by the SWRCB. Section XI.B.6 of the IGP requires all facilities to monitor their stormwater discharge for certain water quality parameters (that is, pH, total suspended solids [TSS], and oil and grease). Based on the project site's Regulated Standard Industrial Classification Codes (4953 and 5093), additional monitoring parameters are iron (Fe), lead (Pb), aluminum (Al), zinc (Zn), and chemical oxygen demand (COD). The WPWMA implements and maintains the following minimum best management practices (BMPs) to reduce or prevent pollutants in industrial stormwater discharges to the extent feasible:

- Good housekeeping
- Preventive maintenance
- Spill and leak prevention and response
- Material handling and waste management
- Erosion and sediment controls
- Employee training program
- Quality assurance and record keeping

As described in the SWPPP, the Monitoring Implementation Plan includes the following:

- Qualifying Storm Events (QSEs). Stormwater sampling and visual observations are required during QSEs. A QSE is a precipitation event that produces a discharge for at least one drainage area and is preceded by 48 hours with no discharge from any drainage area.
- Safety Consciousness and Monitoring Exceptions. Monitoring activities, including sample collection and visual observations, are not required under the following conditions:
  - During dangerous weather conditions such as flooding or electrical storms
  - Outside of scheduled WPWMA office staff hours
- Monthly Visual Observations. At least once per calendar month, each drainage area is monitored and visually observed for the following:
  - Presence or indications of prior, current, or potential unauthorized Nonstormwater Discharges (NSWDs) and their sources
  - Authorized NSWDs, sources, and associated BMPs to comply with Section IV.B.3 of IGP
  - Outdoor industrial equipment and storage areas, outdoor industrial activities areas, BMPs, and all other potential source of industrial pollutants
- The monitor visually observes and records the presence or absence of floating and suspended materials, oil and grease, discolorations, turbidity, odors, trash and debris, and source(s) of any discharged pollutants on a Sampling Event Visual Observations Form. When pollutants are observed in the discharged stormwater, follow-up observations of the drainage area are conducted to identify the probable source of the pollutants. In the event a visual observation identifies a deficiency or deficiencies in the SWPPP or BMPs (either design or implementation) a Response Action is required and taken immediately. All discharge locations and stormwater storage or containment areas of the project site shown on Figures 12-4, 12-5, and 12-6 are considered Visual Observation Points and are monitored by the monitoring team members.
- Sampling and Analysis. Stormwater samples are collected at surface water sampling locations SW-1, SW-2, and SW-3, shown on Figure 12-6, and analyzed from two QSEs in the first half of each reporting year (July 1 to December 31), and two QSEs in the second half of each reporting year (January 1 to June 30) to the extent sufficient QSEs occur during each of these periods. In every sampling event, samples are collected and analyzed for pH, TSS, oil and grease, Fe, Pb, Al, Zn, and COD, as appropriate, depending on the source of the stormwater and associated operation type.
- Sampling Points and Times. Sampling is conducted at all stormwater discharge points permitted in the SWPPP. Samples are collected within four hours of the start of discharge, or start of facility operations if the QSE occurs within the previous 12-hour period.
- Analysis Requirements. Samples are sent to a qualified lab for analytical testing in conformance with the parameters and constituents, numeric action level values, test and analysis methods, and reporting units provided in the SWPPP.
- Quality Assurance and Control. A quality assurance and quality control plan is implemented, including procedures for observation and sampling logs, chain of custody, and proper sampling.
- Sampling and Analysis Reporting. All sampling and analytical results for all individual or qualified combined samples are submitted via SMARTS within 30 days of obtaining results for each sampling event.
- Record Keeping. Samples and measurements taken for the purpose of the monitoring plan are representative of the monitored activity. Results of all monitoring activities, required or not required, are included in calculating and reporting the data submitted.

LEGEND

Sampling Points

Sampling Point	Take Samples For
1 and 3	pH TSS O&G Fe
2	pH TSS O&G Fe Pb Al Zn COD

N (not to scale)

Source: Michael Baker International, 2015. Stormwater Pollution Prevention Plan, Western Placer Waste Management Authority. January 31.

Figure 12-6. Sampling/Monitoring Points
Draft Environmental Impact Report
Renewable Placer: Waste Action Plan
Placer County, California

Jacobs

Leachate Monitoring

As described by SCS (2020b), the WRSL is equipped with a leachate-monitoring network consisting of leachate collection and recovery system (LCRS) module sumps. The LCRS sumps are monitored monthly for liquid depth and field parameters, including electrical conductivity (also known as specific conductance) and pH when liquid is present. Leachate samples are collected on an annual basis from the sumps with sufficient liquid, typically during the fourth quarter of each year, and analyzed by an analytical laboratory for leachate-monitoring parameters, including dissolved inorganics, total organic carbon, volatile organic compounds (VOCs), semi-VOCs, chlorinated herbicides, and organophosphorus pesticides.

As described by SCS (2020b), leak-detection points for monitoring the LCRS are designated M-5 LD, S-15 (also identified as LD-15 or M- 15 LD), and M-16 LD South and M-16 LD West. Note that the designations S-15 and LD-15 denote a single sump that serves as both a leak-detection sump and a lysimeter for unsaturated zone monitoring. The leak-detection sumps are monitored monthly for liquid levels, and if liquid is present, they are sampled quarterly and analyzed for the leachate-monitoring parameters. All liquid, to the extent possible, is removed from the leak-detection sumps on a quarterly basis. Gas samples are collected on a semiannual basis from the leak-detection sump standpipes and analyzed for VOCs and methane.

Unsaturated Zone Monitoring

As described by SCS (2020b), the unsaturated zone monitoring network consists of suction lysimeter detection points S10-A/B, S11-A/B, S12-A/B, S13-A/B, S14-A/B, M-5 LY, S-15R, M-16 LY SR, and M-16 LY WR; suction lysimeter background point BG A/B; and pan lysimeter detection points S-15 (M-15 LY), M-5 LY, M-16 LY South, and M-16 LY West. Pan lysimeters located at these points are placed below (or as close to below for suction lysimeters) the leachate-collection system or under the leak-detection system, as appropriate. Note that S-15 and M-15 LY (also identified as LD-15) designate a single sump that serves as both a leak-detection sump and a lysimeter. Pan lysimeter monitoring points are monitored monthly for liquid level and sampled quarterly. Suction lysimeter points are sampled semiannually during the second and fourth quarters and analyzed for the leachate-monitoring parameters.

Groundwater Monitoring

As described by MBI (2015), groundwater at the WRSL occurs at depths ranging from 70 to 110 feet below ground surface within the alluvial sediments that underlie the project site. Groundwater has been observed within the overlying unsaturated zone in what has been referred to as temporary or transient perched zones. This water is considered to result from the downward migration of infiltrating water. The water may accumulate on lower permeability layers and form temporary perched zones (EMCON 1988, as referenced in MBI 2015). There are no known springs within the project site or within 1 mile of the project site.

During the second quarter of 2020, the water table occurred at elevations ranging from approximately 31 to 38 feet AMSL, corresponding to depths of approximately 80 to 100 feet below ground surface (SCS 2020b). Groundwater flows to the southwest at the project site at approximately 0.026 feet per day or 9.3 feet per year (SCS 2020b).

As described by SCS (2020b), groundwater monitoring is performed on a quarterly basis at the WRSL in accordance with the Monitoring and Reporting Program (MRP) described in WDR Order No. R5-2007-0047 (CVRWQCB 2007). The groundwater monitoring network consists of 39 groundwater monitoring wells across the site as follows:

- 12 wells associated with the Corrective Action Program (CAP) (MW-5, CW-5S, CW-5M, CW-5D, MW-9, CW-9S, CW-9M, CW-9D, MW-10, MW-11R, MW-13, and MW-23R) sampled quarterly
- 24 downgradient wells associated with the Detection Monitoring Program (MW-2, MW-3, MW-6, MW-7, CW-7S, CW-7M, CW-7D, MW-8, MW-12, MW-14 through MW-18, CW-19S, CW-19M, CW-19D, MW-22, MW-24, CW-25S, CW-25M, and CS-25D sampled semiannually, and MW-19 and MW-20 sampled quarterly)
- 2 upgradient (background) wells (LW-1 and MW-4) sampled annually
- Well MW-1 used for water level monitoring only

The 15 "CW" cluster wells were installed to monitor the shallow (-S), intermediate (-M), and deep (-D) intervals of the uppermost water-bearing zone and are sampled by using a portable electric submersible pump. All other monitoring wells are screened in the uppermost water-bearing zone and, with the exception of well LW-1, are equipped with a dedicated submersible pump used for purging and to retrieve groundwater samples. Well LW-1 is purged and sampled by using a disposable bailer.

VOCs have been detected in groundwater samples from several monitoring wells at the WRSL. Historically, VOCs were first observed in January 1989 and reconfirmed at well MW-9 (located in the northern part of the site, at the western edge of the currently closed, non-Subtitle D lined landfill modules) during drilling and installation of additional groundwater monitoring wells during the fourth quarter 1995. Prior reports suggested that the source of the VOCs appeared to be landfill gas (LFG). As described by SCS (2020b), a CAP and Addendum were submitted to the CVRWQCB on May 20, 1997, and September 23, 1997, respectively. The CVRWQCB approved the CAP and its addendum in late 1997, which required the installation of a final cover and an LFG extraction system on the unlined landfill modules in the northern half of the permitted landfill boundary, where the VOCs were detected. To monitor the effectiveness of these CAP measures, corrective action wells MW-9, MW-10, and MW-11R are sampled on a quarterly basis. MW-10 is located about 350 to 400 feet south of MW-9, and MW-11R is located in the same vicinity. Data from the CAP wells are evaluated for inorganic and organic constituent concentration trends.

Trace concentrations of VOCs were detected in groundwater monitoring wells MW-5 and MW-13, and former well MW-23, beginning in 2001. These wells were added to the CAP monitoring program (Order No. R5-2002-0218). WPWMA submitted an Engineering Feasibility Study (SCS 2019) to review the current CAP and determine the viability of alternatives for corrective action not currently being performed. As described by SCS (2019), WPWMA is exploring the viability of a localized, seasonal groundwater pump-and-treat system, in addition to the 1997 CAP measures, to remediate groundwater more expeditiously at the project site.

Fluctuations in concentrations of VOCs, calcium, magnesium, and bicarbonate alkalinity, which can each be affected by LFG, have been observed in the samples from the CAP wells. Changes in concentrations of these parameters suggest that the influence of LFG on groundwater quality has varied over time. WRSL continues to adjust LFG extraction wells to control LFG migration and, in recent years, has greatly increased LFG yields from the landfill.

The WPWMA received a Notice of Violation (NOV) from CVRWQCB, dated January 17, 2019, pertaining to recurring VOC detections in unsaturated zone sumps, methane exceedances in perimeter LFG probes, and other monitoring and reporting items. The WPWMA submitted a Compliance Plan to CVRWQCB on April 15, 2019, to address compliance items identified in the NOV. These items have been addressed in previous reports, and tables and figures that were modified to address these items and continue to be presented in the quarterly monitoring reports (SCS 2020b).

As reported by SCS (2020b), second quarter 2020 detection monitoring results for the WRSL indicate VOC detections of trace concentrations of tetrachloroethene (PCE) and toluene in wells MW-18 and CW-25S, detections of inorganic parameters within historical concentration ranges, except for sulfate in well MW-20 and nitrate as N in wells CW-7S, MW-18, and CW-25M. Second quarter 2020 corrective action monitoring results for the WRSL indicate VOC detections of 1,1-DCA, cis-1,2-DCE, PCE, trichloroethene, benzene, 1,4-DCB, freon-12, toluene, and vinyl chloride, and detections of inorganic parameters above their respective historical concentration ranges for sulfate, nitrate as N, and potassium (SCS 2020b).

12.2 Regulatory Setting

12.2.1 Federal

Clean Water Act of 1972, as amended.

The Clean Water Act (CWA), enacted by the federal government in 1972 and subsequently amended, was designed to restore and maintain the chemical, physical, and biological integrity of the nation's waters and is the principal federal statute for water quality protection. In general, the CWA requires compliance with state and federal pollution control measures, no degradation of instream water quality needed to support designated uses, control of nonpoint sources of water pollution through conservation or BMPs, federal agency leadership in controlling nonpoint pollution from managed land, and rigorous criteria for controlling pollution discharges into waters of the United States.

The CWA requires that point source discharges of pollutants to waters of the United States be performed in conformance with an NPDES permit. NPDES permits establish effluent limitations that incorporate various requirements of the CWA designed to protect water quality. The CWA authorizes the U.S. Environmental Protection Agency (EPA) or states with an approved NPDES program to issue permits. California became a "delegated state" for issuing NPDES permits in 1974. The state issues NPDES permits as WDRs in accordance with a Memorandum of Agreement between EPA and SWRCB, and as codified in the *California Water Code*.

In response to the CWA, promulgated in 1972 as subsequently amended and codified as final regulations in 1990 in Title 40 of the *Code of Federal Regulations* (CFR), Part 122 (40 CFR 122), the SWRCB elected to issue a statewide General Permit that would apply to all discharges covered under the new regulations, except municipal storm drain systems and stormwater discharges from construction activities covered under separate statewide permits. The General Permit was initially issued in November 1991 under Water Quality Order No. 91-13-DWQ.

The SWRCB issued a revised General Permit under Order No. 97-03-DWQ in April 1997 to replace the existing General Permit (Order No. 91-13-DWQ). This General Permit was issued to revise some of the provisions of the expired permit in accordance with federal regulations. The revised General Permit (Order No. 97-03-DWQ) requires discharges covered under the former and revised permits to comply with the following requirements:

- Submission of an abbreviated Notice of Intent
- Preparation of a revised SWPPP to comply with the appropriate requirements of the new General Permit
- Development and implementation of a Stormwater Management Plan (SWMP)
- Annual reporting of stormwater testing results and a comprehensive site compliance evaluation

The SWPPP has two major objectives: (1) to describe site conditions and activities to help identify sources of pollution that may affect stormwater discharge quality and (2) to identify and implement site-specific BMPs that mitigate pollution in stormwater discharges. Stormwater management controls include structural and nonstructural BMPs. Structural BMPs generally consist of structural devices and improvements that are installed to complement nonstructural BMPs to control potential pollution of stormwater discharges. Nonstructural BMPs generally consist of procedures and policies that are implemented to mitigate the potential for pollution of stormwater caused by site activities.

The SWMP has four objectives: (1) to monitor the quality of stormwater discharges for compliance with the General Permit, (2) to evaluate changing conditions and practices at the site to control pollutants in stormwater discharges, (3) to aid in the implementation of the SWPPP, and (4) to measure the effectiveness of the BMPs in mitigating pollutants in stormwater discharges. The General Permit requires annual sampling and testing of stormwater runoff discharge events and the subsequent reporting of results. Annual reports are required to be submitted by July 1 of each year to the relevant regional water quality control board (RWQCB), in this case, the CVRWQCB.

National Toxics Rule.

EPA issued the National Toxics Rule (40 CFR 131.36) in 1992 under the CWA to establish numeric criteria for priority toxic pollutants in 14 states and jurisdictions, including California, to protect human health and aquatic life. The rule established water quality standards for 42 pollutants for which water quality criteria exist under CWA Section 304(a) but for which the respective states had not adopted adequate numeric criteria. EPA issued the California Toxics Rule in May 2000. This rule establishes numeric water quality criteria for 130 priority pollutants for which EPA has issued Section 304(a) numeric criteria that were not included in the National Toxics Rule.

Federal Antidegradation Policy.

The federal antidegradation policy, established in 1968, is designed to restore and maintain the chemical, physical, and biological integrity of the nation's waters. The federal policy directs states to adopt a statewide policy that includes the following primary provisions:

- Existing instream uses and the water quality necessary to protect those uses shall be maintained and protected
- Where existing water quality is better than necessary to support fishing and swimming conditions, that quality shall be maintained and protected unless the state finds that allowing lower water quality is necessary for important local economic or social development
- Where high-quality waters constitute an outstanding national resource, such as waters of national and state parks, wildlife refuges, and waters of exceptional recreational or ecological significance, that water quality shall be maintained and protected.

Watershed Protection and Flood Prevention Act of 1954

The Watershed Protection and Flood Prevention Act establishes the policy that the federal government should cooperate with states and their political subdivisions, soil or water conservation districts, flood prevention or control districts, and other local public agencies for the purposes of preventing erosion, floodwater, and sediment damages in the watersheds of the rivers and streams of the United States, furthering the conservation, development, use, and disposal of water, and the conservation and use of land, thereby preserving, protecting, and improving the nation’s land and water resources and the quality of the environment.

Floodplain Management, Executive Order 11988 of May 24, 1977

Executive Order 11988 directs agencies to provide leadership and to take action to reduce the risk of flood loss, to minimize the impact of floods on human safety, health, and welfare, and to restore and preserve the natural and beneficial values served by floodplains in carrying out responsibilities for (1) acquiring, managing, and disposing of federal lands and facilities; (2) providing federally undertaken, financed, or assisted construction and improvements; and (3) conducting federal activities and programs affecting land use, including water and related land resources planning, regulating, and licensing activities.

Protection of Wetlands, Executive Order 11990 of May 24, 1977

Executive Order 11990 directs agencies to provide leadership and to take action to minimize the destruction, loss, or degradation of wetlands, and to preserve and enhance the natural and beneficial values of wetlands in carrying out the agency's responsibilities for (1) acquiring, managing, and disposing of federal lands and facilities; (2) providing federally undertaken, financed, or assisted construction and improvements; and (3) conducting federal activities and programs affecting land use, including water and related land resources planning, regulating, and licensing activities.

Title 40, Part 258 of the *Code of Federal Regulations*, "Solid Waste Disposal Facility Criteria (Subtitle D)"

Federal standards regarding municipal solid waste landfills are contained in Subtitle D. By enacting Subtitle D, the EPA intended that states maintain the lead role in implementing and enforcing Subtitle D through approved state permit programs. Title 27 of the *California Code of Regulations* contains the current regulations of the California Department of Resources Recycling and Recovery (CalRecycle) and SWRCB pertaining to landfill disposal of municipal solid wastes. California's solid waste permit program was approved by EPA. As a result, California's solid waste regulations were determined to be functionally equivalent to Subtitle D. Accordingly, throughout this section, references to pertinent regulations will be to Title 27 regulations.

12.2.2 State

Porter-Cologne Water Quality Control Act (*California Water Code* Section 13000 et seq.) of 1969, as amended

The Porter-Cologne Water Quality Control Act (Porter-Cologne Act) is the principal law governing water quality regulation in California. It establishes a comprehensive program to protect water quality and the beneficial uses of water. The Porter-Cologne Act applies to surface waters, wetlands, and groundwater and to both point and nonpoint sources of pollution. Pursuant to the Porter-Cologne Act, the policy of the state is as follows:

- The quality of all waters of the state shall be protected.
- All activities and factors affecting the quality of water shall be regulated to attain the highest water quality within reason.
- The state must be prepared to exercise its full power and jurisdiction to protect the quality of water in the state from degradation.

The Porter-Cologne Act also requires adoption of water quality control plans that contain the guiding policies of water pollution management in California. Several statewide water quality control plans have been adopted by SWRCB. In addition, regional water quality control plans (basin plans) have been adopted

by each of the RWQCBs and are updated as necessary and practical. These plans identify the existing and potential beneficial uses of waters of the state and establish water quality objectives to protect these uses.

Water Quality Control Plan for the Sacramento and San Joaquin Basin of 2018

CVRWQCB adopted the Water Quality Control Plan for the Sacramento and San Joaquin Basin (Basin Plan), which consists of designated beneficial uses to be protected, water quality objectives to protect those uses, and a program of implementation needed for achieving the objectives. The Basin Plan serves as a regulatory reference for meeting both state and federal requirements for water quality control.

General Permit for Stormwater Discharges Associated with Construction Activity

SWRCB adopted the statewide NPDES Construction General Permit (CGP) in August 1999. The CGP was updated in 2009 with adopted Order 2009-0009-DWQ and amended in 2010 and 2012. The current CGP is Order 2012-0006-DWQ. The state requires that projects disturbing more than 1 acre of land during construction file a notice of intent with RWQCB to be covered under this permit. Construction activities subject to the CGP include clearing, grading, stockpiling, and excavation. Dischargers are required to eliminate or reduce nonstormwater discharges to storm drainage systems and other waters. A SWPPP must be developed and implemented for each site covered by the permit. The SWPPP must include BMPs designed to prevent construction pollutants from contacting stormwater and to keep products of erosion from moving offsite into receiving waters throughout construction and the life of the project; the BMPs also must address source control and, if necessary, pollutant control.

State Nondegradation Policy

In 1968, as required under federal antidegradation policy, SWRCB adopted a nondegradation policy aimed at maintaining high quality for waters in California. The nondegradation policy states that the disposal of wastes into state waters shall be regulated to achieve the highest water quality consistent with maximum benefit to the people of the state and to promote the peace, health, safety, and welfare of the people of the state. The policy provides as follows:

> a) Where the existing quality of water is better than required under existing water quality control plans, such quality would be maintained until it has been demonstrated that any change would be consistent with maximum benefit to the people of the state and would not unreasonably affect present and anticipated beneficial uses of such water.
>
> b) Any activity that produces waste or increases the volume or concentration of waste and which discharges to existing high-quality waters would be required to meet WDRs.

***California Water Code*, Water Supply Wells, and Groundwater Management**

The *California Water Code* is enforced by DWR. The mission of DWR is "to manage the water resources of California in cooperation with other agencies, to benefit the state's people, and to protect, restore, and enhance the natural and human environments." DWR is responsible for promoting California's general welfare by confirming beneficial water use and development statewide. The laws regarding groundwater wells are addressed in the *California Water Code*: Division 1, Article 2, and Articles 4.300 to 4.311, and Division 7, Articles 1–4. The Water Code also includes provisions for water supply assessments; these are included in Water Code Sections 10910–10915 and California Environmental Quality Act (CEQA) Guidelines Section 15155. Further guidance is provided by bulletins published by DWR, such as Bulletins 74-81 and 74-90, related to groundwater well construction and abandonment standards.

Groundwater management is outlined in the *California Water Code*, Division 6, Part 2.75, Chapters 1–5, Sections 10750–10755.4. The Groundwater Management Act was first introduced in 1992 as Assembly Bill (AB) 3030 and has since been modified by Senate Bill (SB) 1938 in 2002, AB 359 in 2011, and the Sustainable Groundwater Management Act (SGMA) (SB 1168, SB 1319, and AB 1739) in 2014. The intent of the acts is to encourage local agencies to work cooperatively to manage groundwater resources within their jurisdictions and to provide a methodology for developing a groundwater management plan.

Sustainable Groundwater Management Act of 2014

The SGMA became law on January 1, 2015, and applies to all groundwater basins in the state (Water Code Section 10720.3). By enacting the SGMA, the Legislature intended to provide local agencies with the authority and the technical and financial assistance necessary to sustainably manage groundwater within their jurisdiction (Water Code Section 10720.1).

Under the SGMA, any local agency that has water supply, water management, or land use responsibilities within a groundwater basin may elect to be a "groundwater sustainability agency" for that basin (Water Code Section 10723). Local agencies had until January 1, 2017, to elect to become or form a groundwater sustainability agency. If a basin is not within the management area of a groundwater sustainability agency, the county within which the basin is located is presumed to be the groundwater sustainability agency for the basin. However, the county may decline to serve in this capacity (Water Code Section 19724).

The SGMA also requires DWR to categorize each groundwater basin in the state as high, medium, low, or very low priority (Water Code Sections 10720.7, 10722.4). All basins designated as high or medium priority must be managed by a groundwater sustainability agency under a groundwater sustainability plan that complies with Water Code Section 10727 et seq. If required to be prepared, groundwater sustainability plans were required to be prepared by January 31, 2020, for all high- and medium-priority basins that are subject to critical conditions of overdraft, as determined by DWR, or by January 31, 2022, for all other high- and medium-priority basins. In lieu of preparing a groundwater sustainability plan, a local agency had the option to submit an alternative that complies with the SGMA no later than January 1, 2017, and every 5 years thereafter (Water Code Section 10733.6).

The project site is in the Sacramento Valley Groundwater Basin, North American Subbasin. On December 15, 2014, DWR announced its official "initial prioritization" of the state's groundwater basins for purposes of complying with the SGMA, and this priority list became effective on January 1, 2015 (DWR 2014). DWR has ranked the subbasin as "high priority" because of its increasing population. However, the portion of the subbasin within Placer County has been managed for long-term resilience and has incorporated groundwater management policy and monitoring because of previous groundwater management legislation implemented in 1992. In response to the SGMA, the West Placer Groundwater Sustainability Agency was formed in 2017. This agency is responsible for the production of a groundwater sustainability plan by early 2022.

Title 27, Environmental Protection – Division 2, Solid Waste, *California Code of Regulations*

Title 27 contains the current regulations of CalRecycle (previously the California Integrated Waste Management Board) and SWRCB pertaining to landfill disposal of municipal solid wastes. Federal standards regarding municipal solid waste landfills are contained in Subtitle D. By enacting Subtitle D, the EPA intended that states maintain the lead role in implementing and enforcing Subtitle D through approved state permit programs. California's solid waste permit program was approved by EPA. As a result, California's solid waste regulations were determined to be functionally equivalent to Subtitle D. Accordingly, throughout this section, references to pertinent regulations will be to Title 27 regulations.

The Title 27 regulatory scheme governing landfill disposal of municipal solid wastes is a blend of prescriptive and performance standards covering every aspect of the design, construction, and operation of landfill disposal facilities. These standards include siting criteria, seismic design standards, and containment system design and construction strategies to prevent impacts on surface water and groundwater resources. The following subchapters from Chapter 3 of Title 27 (Criteria for all Waste Management Units, Facilities, and Disposal Sites) are relevant to hydrology and water quality:

- Subchapter 2 – Siting and Design
- Subchapter 3 – Water Monitoring

Additional requirements for these siting and design criteria are provided in the following subchapters of Title 27 for the operational, closure, and post-closure periods:

- Subchapter 4 – Criteria for Landfills and Disposal Sites
- Subchapter 5 – Closure and Post-Closure Maintenance

Section 20240, Classification and Siting Criteria: Waste management units and engineered structures shall meet the following criteria:

- **5-Foot Separation.** All new landfills, waste piles, and surface impoundments shall be sited, designed, constructed, and operated such that wastes will be a minimum of 5 feet above the highest anticipated elevation of underlying groundwater. Existing landfills, waste piles, and surface impoundments shall be operated such that wastes will be a minimum of 5 feet above the highest anticipated elevation of underlying groundwater (Subsection [c]).

Section 20250, Class II: Waste Management Units for Designated Waste: Waste management units and engineered structures shall meet the following criteria (in addition to the more restrictive Class III requirements under Section 20260):

- **General.** Class II waste management units (Class II Units) shall be located where site characteristics and containment structures isolate waste from waters of the state.
- **Geologic Setting.** As described in Subsection (b) of Section 20250:

    1) New and existing Class II landfills or waste piles shall be immediately underlain by natural geologic materials that have a hydraulic conductivity of not more than $1x10^{-6}$ centimeters per second (cm/sec) (that is, 1 foot/year) and which are of sufficient thickness to prevent vertical movement of fluid, including waste and leachate, from units to waters of the state for as long as wastes in such units pose a threat to water quality. Class II units shall not be located where areas of primary (porous) or secondary (rock opening) hydraulic conductivity greater than $1x10^{-6}$ cm/sec (1 foot/year) could impair the competence of natural geologic materials to act as a barrier to vertical fluid movement.

    2) Natural or artificial barriers shall be used to prevent lateral movement of fluid, including waste and leachate.

    3) A liner system with a hydraulic conductivity of not more than $1x10^{-6}$ cm/sec (1 foot/year) shall be used for landfills and waste piles when natural geologic materials do not satisfy the requirements in (b)(1).

    4) New and existing Class II Units shall be designed, constructed, operated, and maintained to prevent inundation or washout caused by floods with a 100-year return period. Municipal solid waste landfills are also subject to any more-stringent flood plain and wetland siting requirements referenced in SWRCB Resolution No. 93-62 (see s258.11 and s258.12 of 40CFR258).

Section 20260, Class III: Landfills for Nonhazardous Solid Waste: Waste management units and engineered structures shall meet the following criteria:

- **General.** Class III landfills shall be located where site characteristics provide adequate separation between solid waste and waters of the state (Subsection [a]).
- **Geologic Setting.** Municipal solid waste landfills shall be sited where soil characteristics, distance from waste to groundwater, and other factors will prevent the impairment of beneficial use of surface water or of groundwater beneath or adjacent to the landfill (Subsection [b]). Factors that shall be evaluated include (A) size of the landfill, (B) hydraulic conductivity and transmissivity of underlying soils, (C) depth to groundwater and variations in depth to groundwater, (D) background quality of groundwater, (E) current and anticipated use of the groundwater, and (F) annual precipitation. Where consideration of these factors indicates that site characteristics alone do not protect the quality of groundwater or surface water, Class III landfills shall be required to have a single clay liner with hydraulic conductivity of $1x10^{-6}$ cm/sec or less. (The liner requirement in Section 20260 was superseded by SWRCB Resolution No. 93-62, incorporating Subtitle D requirements, which requires a composite liner that comprises a 2-foot-thick compacted soil layer having a maximum permeability of 1×10^{-7} cm/sec overlain by a geomembrane having a minimum thickness of 40 mils.)
- **Flooding.** New Class III landfills shall be designed, constructed, operated, and maintained to prevent inundation or washout caused by floods with a 100-year return period (Subsection [c]).
- **Ground Rupture.** New Class III landfills shall not be located on a known Holocene fault (Subsection [d]). A Holocene fault is defined as a fault that is or has been active during the last 11,000 years.
- **Rapid Geologic Change.** New Class III landfills can be located within areas of potential rapid geologic change only if the RWQCB finds that the unit's containment structures are designed, constructed, and maintained to preclude failure (Subsection [e]).

Section 20330, SWRCB – Liners: Liners shall be designed and constructed to contain the fluid, including LFG, waste, and leachate, as required in the previously noted siting criteria.

Section 20340, SWRCB – Leachate Collection and Removal Systems: LCRSs are required for Class III landfills that have a liner or that accept sewage or water treatment sludge. The LCRS shall be installed directly above underlying containment features or landfill and waste piles and installed between the liners for surface impoundments.

Section 20360, Subsurface Barriers: Subsurface barriers are cutoff walls that are used in conjunction with natural geologic materials to satisfy the lateral hydraulic conductivity standards where there is potential for lateral movement of fluid. Cutoff walls shall be installed at Class III landfills as required by RWQCB.

Section 20365, Precipitation and Drainage Controls: Units and their respective containment structures shall be designed and constructed to limit, to the greatest extent possible, ponding, infiltration, inundation, erosion, slope failure, washout, and overtopping.

Section 20370, Seismic Design: Class III Units shall be designed to withstand the maximum probable earthquake (MPE) without damage to the foundation or to the structures that control leachate, surface drainage, erosion, or gas. As required in Section 21750(f)(5), a stability analysis, including a determination of the expected peak ground acceleration of the unit associated with the MPE for Class III landfills, shall be included as part of the report of waste discharge (or joint technical document) for the proposed unit. Section 21750(f)(5) also requires that an updated stability analysis be included as part of the final closure and post-closure maintenance plan if the original analysis no longer reflects the conditions at the unit.

12.2.3 Local

The WPWMA is a JPA composed of Placer County and the cities of Lincoln, Rocklin, and Roseville to own and operate a regional recycling facility and sanitary landfill. As a JPA, the WPWMA considers local regulations and consults with local agencies, but County and city regulations are not applicable, because the County and cities do not have jurisdiction over the proposed project. Accordingly, the following discussion of local goals and policies associated with hydrology and water quality is provided for informational purposes only.

Placer County General Plan

The "Public Facilities and Services," "Natural Resources," and "Health and Safety" sections of the Placer County General Plan include goals and policies intended to provide flood protection and minimize impacts on property and hydrologic resources from stormwater runoff. Specific policies require new storm drainage systems to conform to the Placer County Flood Control and Water Conservation District (PCFCWCD) Stormwater Management Manual and the County Land Development Manual (Policy 4.E.4), require implementation of stormwater BMPs on construction sites (Policy 6.A.5), and discourage grading during the rainy season (Policy 6.A.7).

The Placer County General Plan includes the following goals and policies related to water resources and flooding:

- **GOAL 4.E:** To manage rainwater and stormwater at the source in a sustainable manner that least inconveniences the public, reduces potential water-related damage, augments water supply, mitigates stormwater pollution, and enhances the environment.
  - **Policy 4.E.1:** The County shall encourage the use of natural stormwater drainage systems to preserve and enhance natural features.
  - **Policy 4.E.4:** The County shall ensure that new storm drainage systems are designed in conformance with the PCFCWCD's Stormwater Management Manual and the County Land Development Manual.
  - **Policy 4.E.11:** The County shall require new development to adequately mitigate increases in stormwater peak flows and volume. Mitigation measures should take into consideration impacts on adjoining lands in the unincorporated area and on properties in jurisdictions within and immediately adjacent to Placer County.
  - **Policy 4.E.12:** The County shall encourage project designs that minimize drainage concentrations and impervious coverage, minimize increases in runoff, promote infiltration, and maintain, to the extent feasible, natural site drainage conditions.
  - **Policy 4.E.13:** The County shall require that new development conforms with the applicable programs, policies, recommendations, and plans of the PCFCWCD.
  - **Policy 4.F.14:** The County shall require projects that have significant impacts on the quantity and quality of surface water runoff to allocate land as necessary for the purpose of detaining post-project flows, evapotranspiring, infiltrating, harvesting/using, and biotreating stormwater, and/or for the incorporation of mitigation measures for water quality impacts related to urban runoff.
  - **Policy 4.F.15:** The County shall require that new development in primarily urban development areas incorporate low impact development measures to reduce the amount of runoff, to the maximum extent practicable, for which retention and treatment [are] required.

- **Policy 4.E.18:** The County shall, wherever feasible, require that proponents of new projects encase, or otherwise protect from contamination, domestic water supply canals where they pass through developments with lot sizes of 2.3 acres or less; where subdivision roads are constructed within 100 feet upslope or upstream from canals; and within all commercial, industrial, institutional, and multifamily developments.
- **Policy 4.E.20:** The County shall continue to implement and enforce its Stormwater Quality Ordinance.
- **Policy 4.E.21:** The County shall ensure that all new development [complies] with water quality protection provisions of applicable storm water discharge permits issued pursuant to the NPDES program.

- **GOAL 4.F:** To protect the lives and property of the citizens of Placer County from hazards associated with development in floodplains and manage floodplains for their natural resource values.
  - **Policy 4.F.1:** The County shall require that arterial roadways and expressways, residences, commercial and industrial uses, and emergency facilities be protected, at a minimum, from a 100-year storm event.
  - **Policy 4.F.4:** The County shall require evaluation of potential flood hazards prior to approval of development projects. The County shall require proponents of new development to submit accurate topographic and flow characteristics information and depiction of the floodplain boundaries under fully developed, unmitigated runoff conditions.
  - **Policy 4.F.13:** The County shall continue to implement and enforce its Grading, Erosion and Sediment Control Ordinance, Stormwater Quality Ordinance, and Flood Damage Prevention Ordinance.
  - **Policy 4.F.14:** The County shall ensure that new storm drainage systems are designed in conformance with the PCFCWCD's Stormwater Management Manual and the County's Land Development Manual, the West Placer Stormwater Quality Design Manual, and requirements of applicable stormwater discharge permits issued pursuant to the NPDES program.
- **GOAL 6.A:** To protect and enhance the natural qualities of Placer County's rivers, streams, creeks, and groundwater.
  - **Policy 6.A.1:** The County shall require the provision of sensitive habitat buffers, which shall, at a minimum, be measured as follows: 100 feet from the centerline of perennial streams, 50 feet from the centerline of intermittent streams, and 50 feet from the edge of sensitive habitats to be protected, including riparian zones, wetlands, old growth woodlands, and the habitat of special status, threatened or endangered species. Based on more detailed information supplied as a part of the review for a specific project or input from state or federal regulatory agency, the County may determine that such setback is not applicable in a particular instance or should be modified based on the new information provided. The County may, however, allow exceptions, such as in the following cases:
    a) Reasonable use of the property would otherwise be denied.
    b) The location is necessary to avoid or mitigate hazards to the public.
    c) The location is necessary for the repair of roads, bridges, trails, or similar infrastructure.
    d) The location is necessary for the construction of new roads, bridges, trails, or similar infrastructure where the County determines there is no feasible alternative and the project has minimized environmental impacts through project design and infrastructure placement.

  - **Policy 6.A.2:** The County shall require all development in the FEMA 100-year floodplain to comply with the provisions of the Placer County Flood Damage Prevention Ordinance.
  - **Policy 6.A.6:** The County shall require development projects to comply with the municipal and construction stormwater permit requirements of the Federal Clean Water Act NPDES Phase I and II programs and the State General Municipal and Construction permits. Municipal requirements affecting project design and construction practices are enacted through the County's Stormwater Quality Ordinance. Separate construction permits may be required by and obtained through the SWRCB.
  - **Policy 6.A.7:** All new development and redevelopment projects shall be designed so as to minimize the introduction of pollutants into stormwater runoff, to the maximum extent practicable, as well as minimize the amount of runoff through the incorporation of appropriate BMPs.
  - **Policy 6.A.8:** The County shall support implementation of Low Impact Development site design and Watershed Process Management requirements for new and redevelopment projects in accordance with the NPDES Phase I and II programs, and applicable NPDES permits.
  - **Policy 6.A.10:** The County shall discourage grading activities during the rainy season, unless adequately mitigated, to avoid sedimentation of creeks and damage to riparian habitat.
- **GOAL 8.B:** To minimize the risk of loss of life, injury, damage to property, and economic and social dislocations resulting from flood hazards.
  - **Policy 8.B.3:** The County shall require flood proofing of new and substantially improved structures in areas subject to flooding to be built in accordance with the Flood Damage Prevention Ordinance (*Placer County Code* Chapter 15, Article 15.52).
  - **Policy 8.B.9:** The County shall require evaluation of potential flood hazards prior to approval of a discretionary or ministerial permit that would result in the construction or modification of structures, to determine whether the proposed project is consistent with the protection standards for the County Regulatory Floodplain. The County will not approve any discretionary project or any ministerial permit that would result in the construction or modification of structures for any property within the County Regulatory Floodplain unless the required flood protection specific to that area has been demonstrated in accordance with County ordinances and guidelines.

Placer County Code

As described by Placer County (2019), the *Placer County Code* is the implementing mechanism for the goals and policies of the General Plan. Specific ordinances relevant to hydrology and water quality include the Stormwater Ordinance (Section 8.28 of the *Placer County Code*), Grading, Erosion and Sediment Control Ordinance (Section 15.48 of the *Placer County Code*), and the Flood Damage and Prevention Ordinance (Section 15.52 of the *Placer County Code*). The Stormwater Ordinance includes discharge prohibitions, requirements for BMP installation and reduction of stormwater flows, and enforcement mechanisms. The Grading, Erosion and Sediment Control Ordinance includes regulating grading to safeguard life, limb, health, property and public welfare and to avoid pollution of watercourses with hazardous materials, nutrients, sediment, or other earthen materials generated on or caused by surface runoff on or across the permit area. The Flood Damage and Prevention Ordinance includes standards for construction in or near flood areas and prohibits actions that would raise flood elevations or increase the risk of flood damage to existing structures.

The Engineering and Surveying Division of the Placer County Community Development Resource Agency maintains policies and guidelines regarding grading, erosion control, stormwater design, inspection, and

permitting. County-issued permits and plans related to new infrastructure development and utilities that may be required within the project area include the following:

- Grading permits
- Stormwater quality plans
- Utility encroachment permits
- Improvement plans

The Environmental Health Services Division of the Placer County Department of Health and Human Services administers well installation and drilling and well destruction permitting within Placer County.

Placer County Flood Control and Water Conservation District

As described by Placer County (2019), PCFCWCD was formed by legislative resolution SB 1312 and made effective on August 23, 1984. Formulation and guidance of the PCFCWCD was made by consensus of other participating local government agencies, including the Placer Resource Conservation District and U.S. Soil Conservation Service. The objective of PCFCWCD is to reduce the effects of flooding by maintenance of drainage basins and the use of detention and retention basins; offer technical support; perform studies, advise, and collect data; and coordinate with adjacent jurisdictions. PCFCWCD's Stormwater Management Manual (1990) includes standards and methods for the planning and design of drainage and flood control infrastructure.

Placer County NPDES Municipal Stormwater Permit

As described by Placer County (2019), Placer County is a designated municipal permittee under EPA's NPDES Phase II ("Small MS4") program, which regulates stormwater flows into natural water bodies. Implemented by the State of California in 2013, the NPDES Phase II Permit implements a stormwater management plan that is intended to improve waterways by reducing the quantity of pollutants that stormwater picks up and carries in the storm sewer system during storm events. Requirements of the municipal stormwater permit (SWRCB NPDES General Permit No. CAS000004, Board Order 2003-0005-DWQ) are implemented through the County's Stormwater Quality Program, and all development projects in the County must comply with the provisions of the program. NPDES Phase II, adopted by the SWRCB in February 2013 (2013-0001-DWQ), requires postconstruction stormwater management criteria, including source control, site design, and West Placer County Storm Water Quality Design Manual (LID Manual) measures for new development and redevelopment. Among other requirements, regulated projects are required to perform site assessments as part of the early stages of project design. Site design measures and source control measures must be implemented. LID measures must be incorporated into the design to disconnect runoff from impervious surfaces and allow infiltration of runoff to the extent possible before installation of bioretention BMPs for water quality control for long-term (that is, postconstruction) water quality improvement. In addition, regulated projects that create or replace more than 1 acre of impervious surface must maintain post-project runoff equal to or below pre-project flow rates for the 2-year, 24-hour storm event.

West Placer County Storm Water Quality Design Manual

As described by Placer County (2019), the Western Placer County LID Manual was developed cooperatively by Placer County, the City of Roseville, the City of Lincoln, the City of Auburn, and the Town of Loomis to provide a consistent approach to addressing stormwater management within the west Placer region. The LID Manual contains strategies for LID and BMPs for protecting water quality and hydrologic functions. It is a regulatory compliance tool that assists jurisdictions with meeting the requirements of the Phase II Small MS4 Stormwater NPDES permit. On regulated projects, site design measures and BMPs must be implemented, to the extent technically feasible, to allow infiltration, harvest, or use the

postconstruction runoff generated by the 85th percentile 24-hour storm event. The project site area could be subject to the Phase II permit requirements; therefore, the LID Manual may apply to all development projects at the project site.

Western Placer County Groundwater Management Plan

As described by Placer County (2019), in 2007, the City of Roseville, the City of Lincoln, PCWA, and the California American Water Company adopted the Western Placer County Groundwater Management Plan (WPCGMP). The PCWA service area, including the Sunset Industrial Area, is included in the WPCGMP area. The WPCGMP is designed to assist users in maintaining a safe, sustainable, and high-quality groundwater resource within a zone of the North American Subbasin. The overarching goal of the WPCGMP is the maintenance of groundwater resources to meet backup, emergency, and peak demands without adversely affecting other groundwater uses within the WPCGMP area. To meet this goal, the WPCGMP identifies the following five basin management objectives:

- Manage the groundwater basin so as to not have a significant adverse effect on groundwater quality
- Manage groundwater elevations such that there is an adequate groundwater supply for backup, emergency, and peak demands without adversely affecting adjacent areas
- Participate in state and federal land surface subsidence monitoring programs
- Protect against adverse impacts on surface water flows in creeks and rivers because of groundwater pumping
- Verify that groundwater recharge projects comply with state and federal regulations and protect beneficial uses of groundwater (Placer County 2019)

In November 2013, the Western Placer County Sustainable Yield Report was prepared for the WPCGMP (Placer County 2019). The study was designed to understand the usage, storage capacity, and sustainable yield of the aquifers within the west Placer County section of the North American Subbasin and to develop management strategies to protect and enhance this valuable water resource. The sustainable yield is defined as the amount of groundwater that can safely be extracted in any year or as a long-term average without creating adverse effects. The sustainable yield report indicates that in 2011, 28,455 acre feet per year (afy) of agricultural groundwater was extracted within the PCWA service area. This is slightly less than the 28,940 afy extracted in both 1998 and 1999 and substantially less than the 34,066 afy extracted in 2001 and 2002. The report indicates a steady increase in rural urban groundwater extraction, from 557 afy in 1998 to 899 afy in 2012.

Sunset Area Plan Goals and Policies:

As described by Placer County (2019), the Sunset Area Plan (SAP) includes the following goals and policies relative to water quality, stormwater runoff, and flooding that are applicable to the proposed project:

- **GOAL LU/ED-3: Design and Land Development Practices.** To promote high-quality design and land development practices in the Sunset Area.
  - **Policy LU/ED-3.12: Impervious Surfaces/Low Impact Development.** The County shall require that all new discretionary development be designed in accordance with the LID Manual to incorporate Site Design Measures and Low Impact Development features to infiltrate runoff from impervious surfaces.
- **GOAL PFS-5: Stormwater Drainage.** To manage stormwater as a valuable resource that can recharge groundwater supplies, protect, and enhance natural habitat and biodiversity, add value to new

development or redevelopment projects, as well as reduce potential for flood water-related damage to structures or infrastructure.

- **Policy PFS-5.1: Natural Stormwater Drainage Systems.** The County shall encourage the use of natural stormwater drainage systems to preserve and enhance natural features. At the earliest planning stages, applicants for new development shall assess and evaluate how site conditions such as soils, vegetation, and flow paths will influence the placement of buildings and paved surfaces with a goal of incorporating the capture and treatment of runoff as part of the project design.
- **Policy PFS-5.4: Storm Drainage System Design.** The County shall ensure that storm drainage systems in new development are designed in conformance with the Placer County Flood Control and Water Conservation District's Stormwater Management Manual and the County Land Development Manual. The County shall require submission of a preliminary drainage report, prepared by a professional civil engineer registered in the State of California, as part of the discretionary development project review. The County shall further require that new development conforms with the applicable programs, policies, recommendations, and plans of the PCFCWCD.
- **Policy PFS-5.5: Stormwater Detention.** The County shall require that new development mitigate increases in stormwater peak flows to obtain an objective post-project mitigated peak flow that is equal to the estimated pre-project peak flow less 10 percent of the difference between the pre-project and unmitigated post-project peak flows. Projects that have significant impacts on the quantity of surface water runoff shall allocate land onsite as necessary for detaining post-project flows to meet this requirement. Detention facilities shall be constructed on the project site or within a larger project development area where joint facilities are warranted and approved by the County.
- **Policy PFS-5.6: Stormwater Retention.** The County shall require that new development mitigate increases in stormwater volume to retain the 100-year, 8-day design storm depth of 10.75 inches for the 200-foot elevation, unless another methodology has been agreed upon by Placer County. Mitigation measures should take into consideration impacts on adjoining lands in the unincorporated area and on properties in jurisdictions within, and immediately adjacent to, Placer County. New development may incorporate retention onsite, or at such time that a regional stormwater retention program is developed, participate in the implementation of the regional program by paying regional retention mitigation fees, as deemed appropriate.
- **Policy PFS-5.7: Low-Impact Development.** The County shall require that new development comply with the LID Manual to manage urban development runoff through the use of low impact development LID features, site design measures, and water quality best management practices. These may include, but are not limited to, a combination of features such as pretreatment water quality vaults, vegetated swales, infiltration/sedimentation basins, riparian and stream setbacks, oil/grit separators, porous pavement, rooftop and impervious surface area disconnection, soil quality improvement and maintenance, and tree planting and preservation.

- **GOAL NR-3: Streams and Floodplains.** To protect and enhance the natural qualities of the Sunset Area perennial and ephemeral streams and floodplains.
  - **Policy NR-3.1: Sensitive Habitat Buffers.** The County shall require new development to provide sensitive habitat buffers as specified in the Placer County Conservation Plan and County Aquatic Resource Program.
  - **Policy NR-3.2: Floodplain Compliance.** The County shall require all development in the FEMA or calculated 100-year floodplain to comply with the provisions of the Placer County Flood Damage Prevention Ordinance.

  - **Policy NR-3.7: Grading After October 15th.** The County shall discourage grading activities between October 15th and April 30th, unless such activities are adequately mitigated to avoid impacts during the rainy season, including, but not limited to, stream sedimentation and riparian habitat damage.
  - **Policy NR-3.19: NPDES Compliance.** The County shall require that new development applicants demonstrate to both the County and the CVRWQCB complete compliance with the provisions of a General Construction Stormwater Discharge NPDES permit authorized and approved by the CVRWQCB, if required for development. Compliance may include a written detailed SWPPP and Monitoring Program (required by the NPDES permit). If appropriate to the individual project, the applicant shall demonstrate to the County and the CVRWQCB that the required Water Quality Certification has been approved by the CVRWQCB and that the appropriate BMPs for control of erosion and sedimentation will be incorporated into construction activities.
  - **Policy NR-3.10: Construction-Related Wastewater.** The County shall require new development to demonstrate to the satisfaction of the County and the CVRWQCB their complete compliance with the provisions of a General Permit for Dewatering and Other Low Threat Discharges to Surface Waters (Dewatering General NPDES permit) authorized and approved by the CVRWQCB. Compliance shall include a monitoring and reporting program and shall include BMPs capable of achieving the effluent limitations described in the permit.
  - **Policy NR-3.11: Industrial Stormwater Permits.** The County shall require that new industrial development project applicants apply for a General Industrial Stormwater Permit from the CVRWQCB for any discharges into area surface waters.
  - **Policy NR-3.12: CVRWQCB Consultation.** The County shall require that new development project applicants consult with the CVRWQCB to determine specific WDRs for each facility.

- **GOAL HS-2: Flooding.** To protect the lives and property of the workers, residents, visitors, and property owners in Sunset Area from hazards associated with development in floodplains and manage floodplains for their natural resource values.
  - **Policy HS-2.2: Flood Hazard Evaluation and Mitigation.** The County shall require new discretionary development project applicants to evaluate and mitigate potential flood hazards prior to project approval. The County shall require applicants to submit accurate topographic and flow characteristics information and depict the 100-year floodplain limits under fully-developed, unmitigated runoff conditions. Where public facilities have been constructed or lands have been acquired, with the specific intent of mitigating stormwater runoff, such facilities or lands may be taken into consideration when determining the extent of the 100-year floodplain.

12.3 Impact Analysis and Mitigation Measures

12.3.1 Thresholds of Significance

The thresholds of significance for assessing impacts come from the CEQA Checklist. For hydrology and water quality, the CEQA Checklist asks if the project would do the following:

- Violate any water quality standards or WDRs or otherwise substantially degrade surface or ground water quality?
- Substantially decrease groundwater supplies or interfere substantially with groundwater recharge such that the project may impede sustainable groundwater management of the basin?
- Substantially alter the existing drainage pattern of the site or area, including through the alteration of the course of a stream or river or through the addition of impervious surfaces, in a manner that would

  - Result in substantial erosion or siltation on- or offsite?
  - Substantially increase the rate or amount of surface runoff in a manner that would result in flooding on- or offsite?
  - Create or contribute runoff water that would exceed the capacity of existing or planned stormwater drainage systems or provide substantial additional sources of polluted runoff?
  - Impede or redirect flood flows?
- Conflict with or obstruct implementation of a water quality control plan or sustainable groundwater management plan?

Because the project site is not located in flood hazard, tsunami, or seiche zones, the CEQA Checklist item referencing risk of release of pollutants caused by project inundation for either plan concept is not evaluated in this Draft EIR.

12.3.2 Impacts and Mitigation Measures

This section describes the hydrology and water quality impacts associated with the two plan concepts, mitigation measures for identified significant impacts, and the level of impact significance following implementation of the identified mitigation measures.

IMPACT 12-1	**Potential for Solid Waste Project Elements to Violate Water Quality Standards or Substantially Degrade Surface Water Quality**. The solid waste management operations have the potential to violate water quality standards or WDRs or otherwise substantially degrade surface water quality. Because the project is required to comply with applicable laws and regulations, including amendment of the existing SWPPP, project impacts would be **less than significant**.

Plan Concept 1

Surface Water Quality

Implementation of Plan Concept 1 would involve construction activities, including clearing, grading, stockpiling, and excavation. These activities have the potential to increase runoff because of temporary changes to surface contours. Sediment transport from construction work areas to adjacent water resources could contribute to water quality degradation. The erosion potential at the proposed project ranges from low to high: where work would occur in areas with flat to gentle sloping terrain, the erosion potential is low, but where work would occur on sloping terrain, including the landfill, the erosion potential is high. Therefore, the project would expand coverage for construction and operational activities under the existing IGP SWPPP to control impacts associated with stormwater runoff.

As described in Section 12.1.3, the surface water flows at the WPWMA facility are actively managed and monitored under the existing SWPPP (MBI 2015) issued for the WRSL and MRF in accordance with the SWRCB's General Permit for Storm Water Discharges Associated with Industrial Activities, IGP Order No. 2014-0057-DWQ, NPDES General Permit No. CAS000001 adopted by SWRCB.

Under Plan Concept 1, the existing SWPPP would be modified and implemented for each site covered by the permit, including the WRSL, MRF, composting, and other facilities. The SWPPP would include BMPs designed to prevent construction pollutants from contacting stormwater and to keep products of erosion from moving offsite into receiving waters throughout construction and the life of the project. The BMPs

would also address source control and, if necessary, pollutant control. As discussed in Project Description, Chapter 3, the project could potentially entail a diversion of organics from mixed solid waste (OPMSW) to aerated static pile composting. However, impacts associated with any changes in the increased diversion and processing of OPMSW would be negligible, because the volume of water discharged from the site would not increase, and changes would be covered in an amended IGP SWPPP.

In addition to SWPPP implementation at the landfill, Title 27 includes requirements for Water Monitoring in Subchapter 3 and in Section 20365, Precipitation and Drainage Controls, which require landfill units and their respective containment structures be designed and constructed to limit, to the greatest extent possible, ponding, infiltration, inundation, erosion, slope failure, washout, and overtopping. Project Plan Concept 1 would be required to continue to conform with Title 27 requirements. Therefore, with implementation of the applicable Title 27 regulations and project SWPPP, project impacts on surface water quality would be less than significant.

Plan Concept 2

As described in Chapter 3, Project Description, the primary differences between Plan Concept 1 and Plan Concept 2 are related to where various facilities would be located on WPWMA's property and when various facilities would be developed. These differences do not change the conclusions identified for Plan Concept 1. As such, impacts related to violation of water quality standards or WDRs or otherwise substantial degradation of surface water quality as a result of implementing Plan Concept 2 would be the same as described for Plan Concept 1.

IMPACT 12-2	**Potential for Solid Waste Project Elements to Violate Waste Discharge Requirements or Substantially Degrade Ground Water Quality**. The solid waste management operations have the potential to violate water quality standards or WDRs or otherwise substantially degrade groundwater quality. However, because the project is required to comply with applicable laws and regulations, including project WDRs, and the project involves removal of waste from unlined cells to lined cells, the project impacts are **less than significant**.

Plan Concept 1

Groundwater Quality.

The WPWMA currently operates under WDR Order No. R5-2007-0047 and Title 27 requirements for groundwater monitoring and will continue to operate in a manner consistent with these requirements under an amended WDR for the proposed expansion of solid waste project elements. As described in Section 12.2.2, Title 27 requires groundwater monitoring for Waste Disposal operations. As described in Section 12.1.3, WDR Order No. R5-2007-0047 requires that groundwater monitoring at the WPWMA facility be performed on a quarterly basis at the WRSL in accordance with the Monitoring and Reporting Program, including implementing the established groundwater detection monitoring and corrective action programs to identify, evaluate, and mitigate changes and groundwater quality. As discussed in Section 12.1.3, the existing groundwater monitoring program has detected VOCs that may be associated with LFG or migrating leachate, or both. The proposed project involves removing waste in the unlined landfill and putting it in a lined cell, eliminating the potential for LFG migration for that section of the landfill. Therefore, the proposed project provides potential improvement in groundwater quality by removing an ongoing source of contamination. Therefore, project impacts are less than significant.

Plan Concept 2

As described in Chapter 3, Project Description, the primary differences between Plan Concept 1 and Plan Concept 2 are related to where various facilities would be located on WPWMA's property and when various facilities would be developed. These differences do not change the conclusions identified for Plan Concept 1. As such, impacts related to violation of WDRs or otherwise substantial degradation of groundwater quality as a result of implementing Plan Concept 2 would be the same as described for Plan Concept 1.

IMPACT 12-3	**Potential for Waste Excavation and Relocation to Degrade Surface Water or Groundwater Quality**. The excavation and relocation of previously buried waste would eliminate a long-term source of groundwater contamination. However, during waste excavation and relocation activities, the excavated waste would be exposed to water and wind erosion, which could degrade surface water quality. In addition, the percolation of water through the exposed waste could degrade groundwater quality. The potential for these activities to degrade surface water and groundwater quality would be considered a **significant** impact.

Plan Concept 1

Removing and relocating previously buried waste would expose these materials during the construction period to erosive forces, including wind and rain, that could transport contaminants into local water bodies. If contaminants are transported to local water bodies, surface water quality would be degraded, and over time, groundwater supplies could also be degraded. In addition, the percolation of water through the exposed waste could contribute to groundwater contamination. Established water quality standards could be violated depending upon the level of surface and groundwater exposure to contaminants.

Under Plan Concept 1, the duration of the waste excavation and relocation is estimated to occur over approximately 5 years, with the activities occurring during the spring through fall construction period to avoid winter storm events.

Increases in groundwater recharge and migration of contaminants vertically downward to the shallow aquifer may occur as protective vegetative cover and paved surfaces are removed during construction and landfill cover and waste is excavated from existing pre-Subtitle D unlined landfill modules to new Subtitle D-compliant lined landfill modules. However, because the waste excavation and relocation component of the proposed project would remove waste from the soil-lined area, Plan Concept 1 may also reduce the potential for future groundwater contamination by placing the waste in a composite-lined module. As discussed in Section 12.1.3, the existing groundwater monitoring program has detected VOCs associated with LFG. Removing that waste and putting it in a lined cell would eliminate the potential for LFG migration for that section of the landfill and provide potential improvement in groundwater quality by removing an ongoing source of contamination.

Exposure of waste to precipitation and surface water runoff during waste excavation and relocation has the potential to affect surface water quality directly and groundwater quality indirectly through infiltration of surface water affected by exposure to waste. The impact from implementing Plan Concept 1 would be significant, and Mitigation Measure 12-3 would be implemented.

Plan Concept 2

Under Plan Concept 2, the duration of waste excavation and relocation would be conducted over a shorter period of time (approximately 5 years) than Plan Concept 1. A shorter duration for performing waste excavation and relocation activities involves more equipment traffic and greater volumes of material moved on a day-to-day basis, which presents a more intense construction presence than Plan Concept 1. Impacts related to violation of water quality standards or WDRs or otherwise substantial degradation of surface water or groundwater quality as a result of implementing Plan Concept 2 would be significant, and Mitigation Measure 12-3 would be implemented, as described for Plan Concept 1.

Similar to Plan Concept 1, the removal of waste from a non-Subtitle-D-lined section of the landfill has the potential to result in a beneficial impact on groundwater quality as discussed for Plan Concept 1, where LFG migration to groundwater would be potentially eliminated by moving the waste from an unlined cell to a lined cell. The potential benefit to groundwater from removing waste from the soil-lined landfill would occur sooner under Plan Concept 2 than Plan Concept 1, because the waste would be removed on a shorter timeline under Plan Concept 2.

Mitigation Measure 12-3: Potential for Waste Excavation and Relocation to Degrade Surface Water or Groundwater Quality.

To implement the state and local regulatory policies intended to address the potential for violating water quality standards or WDRs, or otherwise substantially degrading surface or ground water quality, the WPWMA shall do the following:

- Amend the existing project SWPPP for the waste excavation and relocation component of the project. The SWPPP may include the following BMPs:
  - Where excavation and removal occurs over a unlined area, the project will implement secondary containment in the direct path of hauling and removal.
  - Avoidance of excavation and relocation of waste between October 15 and April 30 unless such activities are adequately mitigated to avoid impacts during the rainy season.
  - If excavation and relocation of waste activities cannot be avoided during this period, the project would implement use of tarps or soil cover over the exposed face overnight and when the activity will not occur for more than 24 hours.

The SWPPP will be prepared and implemented prior to ground-disturbing activities commencing for the waste excavation and relocation component of the proposed project.

Level of Significance after Mitigation.

Implementation of Mitigation Measure 12-3 establishes necessary development and implementation of an activity-specific SWPPP for waste excavation and relocation, including limitations on the timing of construction and waste excavation and relocation activities. Obtaining and complying with the SWPPP will mitigate the potential for violating water quality standards or WDRs or otherwise substantially degrading surface water or groundwater quality from waste excavation and relocation and reduce the impact to **less than significant after mitigation**.

IMPACT 12-4	**Potential for Programmatic Elements to Degrade Water Quality**. The complementary and programmatic elements have the potential to violate water quality standards or waste discharge requirements or otherwise substantially degrade surface or ground water quality. Because site-specific SWPPPs would be prepared for these project elements, impacts would be **less than significant**.

Plan Concept 1

In addition to solid waste elements, complementary and programmatic elements may be developed on the WPWMA's properties. Under the project level, for Plan Concept 1, up to 300,000 square feet of building plus exterior infrastructure are reserved in the northern portion of the western property for the complementary solid waste management elements. Under the programmatic level, for Plan Concept 1, up to 1.9 million square feet have been reserved for these elements primarily within the northern and southern extents of the western property, and on the center property. However, opportunities may arise that would support locating some of these complementary and programmatic elements nearer to the solid waste project elements or within areas not yet developed with solid waste project elements.

Construction activities associated with the project level of complementary elements include clearing, grading, stockpiling, and excavation. These activities have the potential to increase runoff because of temporary changes to surface contours. Sediment transport from construction work areas to adjacent water resources could contribute to water quality degradation. The erosion potential at the proposed project ranges from low to high: where work would occur in areas with flat to gentle sloping terrain, the erosion potential is low, but where work would occur on sloping terrain, including the landfill, the erosion potential is high. The proposed complementary elements included in this project would obtain coverage for construction and operational activities under the CGP and implement an SWPPP (or site-specific SWPPPs) to control impacts associated with stormwater runoff. Therefore, construction of the project level of complementary elements would have a less-than-significant impact on water quality.

Buildout of the programmatic elements involve the same construction activities identified for the project level. Construction of the additional programmatic elements (1.6 million sf) would also require separate, project-specific SWPPPs for each project. The site-specific SWPPPs would include BMPs designed to prevent construction pollutants from contacting stormwater and to keep products of erosion from moving offsite into receiving waters throughout construction and the life of the project. The BMPs would also address source control and, if necessary, pollutant control. Therefore, the impact associated with the potential to violate water quality standards or WDRs or otherwise substantially degrade surface water or groundwater quality for the complementary and programmatic elements of the proposed project would be less than significant.

Plan Concept 2

As described in Chapter 3, Project Description, the primary differences between Plan Concept 1 and Plan Concept 2 are related to where various facilities would be located on WPWMA's property and when various facilities would be developed. These differences do not change the conclusions identified for programmatic elements under Plan Concept 1. Plan Concept 2 would obtain coverage for construction activities under the CGP and implement an SWPPP (or site-specific SWPPPs) to control impacts associated with stormwater runoff at complementary and programmatic elements. As such, impacts related to violation of water quality standards or WDRs or otherwise substantial degradation of surface water or groundwater quality as a result of implementation of Plan Concept 2 would be the same as described for Plan Concept 1.

IMPACT 12-5	**Potential to Decrease Groundwater Supplies or Interfere with Groundwater Recharge.** The project does not propose to increase the use of groundwater supplies for the waste management operations or the complementary and programmatic elements. Also, the project site is not located within a groundwater recharge area and would not be expected to substantially interfere with groundwater recharge. Therefore, the project would be expected to have a **less-than-significant** impact on groundwater supplies and groundwater recharge.

Plan Concept 1

Under Plan Concept 1, the use of water would increase during construction activities for dust control; however, the WPWMA does not intend to use groundwater for this activity. The WPWMA also does not anticipate increasing groundwater use over the long-term, except as noted in Section 12.1.3 regarding a possible seasonal groundwater pump-and-treat system, to support expansion of the landfill and associated operations, such as soil and waste compaction and vegetative landfill cover watering. The WPWMA plans to supplement the current groundwater supply with alternative sources of water; for example, the WPWMA intends to use recycled water currently available from the City of Lincoln's Wastewater Treatment Plant and piped to the intersection of Athens and Fiddyment Road, where it is used for agricultural purposes and excess potable water capacity. Although the SAP EIR states groundwater wells within the area would be used only during emergency and single dry-year situations, the WPWMA would continue to use groundwater at operational levels to support its operations. With implementation of an expanded groundwater monitoring program, including wells located at the project perimeter as shown on Figure 3-11, the WPWMA would monitor their use and impact on groundwater levels in the surrounding area.

There is potential for groundwater recharge to be reduced because of an increase in area of impervious surfaces associated with expansion of the MRF building, organics management operation, construction and demolition materials processing operation, and public waste drop-off area operations. Expansion of the landfill disposal capacity development and development of the complementary and programmatic elements over areas currently covered with native soil will also reduce the area available for infiltration of surface water to recharge groundwater. The site is underlain by mostly fine-grained silts and clays that do not facilitate percolation of large quantities of water for groundwater recharge, and thus, the project site is not considered a significant groundwater recharge area compared with the recharge that occurs via surface water drainages in the area. Groundwater recharge is not anticipated to significantly decrease such that sustainable groundwater management would be impeded.

Although the project components, including complementary and programmatic elements, may result in increased impervious surfaces, the potential impact on groundwater recharge resulting from the increase in the extent of impervious surfaces would be minimized by the incorporation of the LID Manual measures (discussed in Section 12.2.3) that allow infiltration of stormwater onsite in conformance with SAP Policy LU/ED-3.12: Impervious Surfaces/Low-Impact Development. Under this policy, the County requires that all new discretionary development be designed in accordance with the LID Manual to incorporate site design measures and LID features to infiltrate runoff from impervious surfaces.

Because the project is not anticipated to interfere with groundwater supply or recharge, impacts associated with implementation of Plan Concept 1 are less than significant.

Plan Concept 2

As described in Chapter 3, Project Description, the primary differences between Plan Concept 1 and Plan Concept 2 are related to where various facilities would be located on WPWMA's property and when various facilities would be developed. These differences do not change the conclusions identified for Plan Concept 1. As such, impacts related to substantially decreasing groundwater supplies or interfering substantially with groundwater recharge such that the project may impede sustainable groundwater management of the basin as a result of implementing Plan Concept 2 would be the same as described for Plan Concept 1.

IMPACT 12-6	**Potential to Increase Runoff and Localized or Downstream Flooding.** Implementation of the proposed project would result in an increase in impervious surfaces on the project site and altered drainage patterns, which would lead to an increase in stormwater runoff compared with existing conditions. The project site is not located within a 100-year floodplain or designated flood hazard zone. Also, the proposed project's stormwater collection system would be designed to capture and retain project-related increases in peak stormwater discharge on the project site. Therefore, the proposed project would not be expected to contribute to localized or downstream flooding, and this impact would be **less than significant**.

Plan Concept 1

As described in Section 12.1.3, the surface water flows at the WPWMA facility are actively managed by using an engineered stormwater management system, including engineered paved areas and landscaped areas to prevent erosion; unlined and lined swales, pipes, and other drainage conveyance features; and sedimentation basins, water detention ponds, and other stormwater collection features. Stormwater monitoring is conducted at the WRSL and MRF under the SWPPP (MBI 2015) in accordance with the SWRCB's General Permit for Storm Water Discharges Associated with Industrial Activities, IGP Order No. 2014-0057-DWQ, NPDES General Permit No. CAS000001 adopted by SWRCB.

As discussed in Impacts 12-1, 12-2, and 12-3, the project would obtain coverage for construction activities by amending the existing IGP SWPPP or obtaining coverage under the CGP and implementing a SWPPP (or site-specific SWPPPs) to control impacts associated with stormwater runoff. In addition to the project SWPPPs, Title 27 regulations require that landfill units and their respective containment structures be designed and constructed to limit, to the greatest extent possible, ponding, infiltration, inundation, erosion, slope failure, washout, and overtopping. With implementation of the applicable laws and regulations, the proposed project would not result in substantial erosion or siltation onsite or offsite.

The project is not located in a 100-year floodplain or designated flood hazard zone. In addition to implementation of the SWPPP and Title 27 measures described earlier, although the project would result in increased area of impervious surfaces, runoff would be minimized by the incorporation of the LID Manual measures (discussed in Section 12.2.3); therefore, the project would not result in a substantial increase in the rate or amount of surface runoff in a manner that would result in flooding onsite or offsite.

Furthermore, the SAP storm drain system would be designed to accommodate buildout stormwater conveyance, so that new development within the SAP area would not generate runoff that exceeds the capacity of the system's ability to handle. Therefore, the project would not create or contribute runoff water that would exceed the capacity of existing or planned stormwater drainage systems or provide substantial additional sources of polluted runoff.

Because the project is not located within a 100-year floodplain or designated flood hazard zone, the project would not impede or redirect flood flows, as measures from the SWPPP, Title 27 measures, and incorporation of LID measures would minimize runoff from the site.

Thus, implementation of all applicable laws and regulations described previously would mean that impacts are less than significant.

Plan Concept 2

As described in Chapter 3, Project Description, the primary differences between Plan Concept 1 and Plan Concept 2 are related to where various facilities would be located on WPWMA's property and when various facilities would be developed. These differences do not change the conclusions identified for Plan Concept 1. As such, impacts related to substantially altering drainage patterns and substantially increasing the rate or amount of surface runoff in a manner that would result in flooding onsite or offsite, creating or contributing runoff water that would exceed the capacity of existing or planned stormwater drainage systems, or providing substantial additional sources of polluted runoff as a result of implementing Plan Concept 2 would be the same as described for Plan Concept 1.

IMPACT 12-7	**Potential Conflicts with Applicable Water Quality Control Plan.** Implementation of applicable laws and regulations would mean that impacts are **less than significant**

Plan Concept 1

As described Section 12.2.2, the Porter-Cologne Act requires adoption of water quality control plans that contain the guiding policies of water pollution management in California. As described in Section 12.1.2, the project site is located within the Sacramento Hydrologic Basin. CVRWQCB adopted the Water Quality Control Plan for the Sacramento and San Joaquin Basin (Basin Plan) of 2018. According to the Basin Plan, the project area is within municipal and domestic water supply beneficial use designations for surface water by the CVRWQCB. The Basin Plan requires that these uses be protected by implementing water discharge requirements and permits, including NPDES permits.

As described earlier for Impacts 12-1 and 12-3, the project would result in a less-than-significant impact on water quality because of implementation of project SWPPPs, compliance with Title 27 regulations, and expanded environmental monitoring systems. Thus, implementation of all applicable laws and regulations described earlier would mean that the project-level solid waste management and complementary and programmatic elements of the proposed project would not conflict with or obstruct implementation of the Basin Plan, and thus, project impacts are less than significant.

Plan Concept 2

As described in Chapter 3, Project Description, the primary differences between Plan Concept 1 and Plan Concept 2 are related to where various facilities would be located on the WPWMA's property and when various facilities would be developed. These differences do not change the conclusions identified for Plan Concept 1. As such, impacts related to conflicting with or obstructing implementation of a water quality control plan or sustainable groundwater management plan as a result of implementing Plan Concept 2 would be the same as described for Plan Concept 1.

IMPACT 12-8	**Potential for Waste Excavation and Relocation to Conflict with or Obstruct Implementation of a Water Quality Control Plan.** Project impacts would be **less than significant**.

Plan Concept 1

As described in Section 12.1.3, the surface water flows at the WPWMA facility are actively managed by using an engineered stormwater management system, including engineered paved areas and landscaped areas to prevent erosion; unlined and lined swales, pipes, and other drainage conveyance features; and sedimentation basins, water detention ponds, and other stormwater collection features. Stormwater monitoring is conducted at the WRSL and MRF under the SWPPP (MBI 2015) in accordance with the SWRCB's General Permit for Storm Water Discharges Associated with Industrial Activities, IGP Order No. 2014-0057-DWQ, NPDES General Permit No. CAS000001 adopted by SWRCB. Leachate, unsaturated zone, and groundwater monitoring are implemented regularly at the WRSL under the WDRs, which include a groundwater detection monitoring program and groundwater CAP.

As described in Sections 3.5.3.4 and 3.6.3.4, the proposed project includes excavation and relocation of existing solid waste. Implementation of Plan Concept 1 will substantially alter existing drainage patterns, temporarily increase areas of exposed waste, and alter groundwater recharge patterns and locations associated with the waste excavation and relocation component of the proposed project. Exposure of waste to precipitation and surface water runoff during waste excavation and relocation has the potential to affect surface water quality directly and groundwater quality indirectly through infiltration of surface water affected by exposure to waste. Therefore, the proposed project would maintain and expand coverage under the existing IGP SWPPP for the waste excavation and relocation activities. With implementation of measures in a SWPPP for waste excavation and relocation activities, including Mitigation Measure 12-3 described earlier, impacts would be less than significant.

Plan Concept 2

As described in Chapter 3, Project Description, the primary differences between Plan Concept 1 and Plan Concept 2 are related to where various facilities would be located on WPWMA's property and when various facilities would be developed. Under Plan Concept 2, the duration of waste excavation and relocation would be conducted over a shorter period of time (approximately 3 years) compared with Plan Concept 1. These differences do not change the conclusions identified for Plan Concept 1. As such, impacts related to conflicting with or obstructing implementation of a water quality control plan or sustainable groundwater management plan as a result of implementing Plan Concept 2 would be the same as described for Plan Concept 1.

12.4 References

California Department of Water Resources (DWR). 2020. C*alifornia's Groundwater, Bulletin 118, Update* Updated January 20. https://water.ca.gov/programs/groundwater-management/bulletin-118

California Department of Water Resources (DWR). 2014. *CASGEM Basin Prioritization Results—June 2014*. Accessed November 14, 2017. https://water.ca.gov/Programs/Groundwater-management/Basin-prioritization

California Department of Water Resources (DWR). 2016. *California's Groundwater (Bulletin 118), Interim Update.* https://water.ca.gov/Programs/Groundwater-Management/Bulletin-118. December 22.

Central Valley Regional Water Quality Control Board (CVRWQCB). 2002. Waste Discharge Requirements (WDR) Order No. R5-2002-0218.

Central Valley Regional Water Quality Control Board (CVRWQCB). 2007. Waste Discharge Requirements (WDR) Order No. R5-2007-0047.

Central Valley Regional Water Quality Control Board (CVRWQCB). 2018. *Central Valley Region (5) Sacramento Hydrologic Basin Planning Area (SB)*. [map]. https://www.waterboards.ca.gov/centralvalley/water_issues/basin_plans/bp_sacramento_hydro_map.pdf.

EMCON Associates, Inc. 1988. *Report of Disposal Site Information, Western Regional Sanitary Landfill, Placer County, California*. October. Referenced in Michael Baker International (MBI). 2015. *Stormwater Pollution Prevention Plan (SWPPP), Western Placer Waste Management Authority.* January 31.

Federal Emergency Response Agency (FEMA). 1998. *Flood Insurance Rate Map, Placer County, California and incorporated areas*. Map No. 06061C0400 F, Panel No. 0400. June 8. Referenced in Michael Baker International (MBI). 2015. *Stormwater Pollution Prevention Plan (SWPPP), Western Placer Waste Management Authority.* January 31.

Michael Baker International (MBI). 2015. *Stormwater Pollution Prevention Plan (SWPPP), Western Placer Waste Management Authority.* January 31.

Placer County. 2019. *Final Environmental Impact Report, Sunset Area Plan/Placer Ranch Specific Plan*. October.

Placer County Flood Control and Water Conservation District. 1990. *Stormwater Management Manual*. Auburn, CA. September 1.

SCS Engineers. 2019. *Engineering Feasibility Study, Western Regional Sanitary Landfill, Placer County, California.* December 31.

SCS Engineers, 2020a. *Fourth Quarter and Annual 2019 Monitoring Report, Western Regional Sanitary Landfill, Placer County, California.* January 31.

SCS Engineers, 2020b. *Second Quarter 2020 Monitoring Report, Western Regional Sanitary Landfill, Placer County, California.* July 31.

U.S. Department of Agriculture. 2020. *California Hydrologic Units.* Natural Resources Conservation Service. Accessed December 18. https://koordinates.com/layer/96058-california-hydrologic-units/.

U.S. Fish and Wildlife Service (USFWS). 2020. *Classification of Wetlands and Deepwater Habitats of the United States.* Accessed December 21. https://www.fws.gov/wetlands/documents/classwet/index.html.

U. S. Geological Survey (USGS). 2020. "Watersheds in 18 California Region." *Science in Your Watershed*. Accessed December 18. https://water.usgs.gov/wsc/cat/18020127.html.

13. Land Use and Planning

13.1 Introduction

This chapter describes the land uses in the proposed project area and the land-use and planning regulations that are applicable to the proposed project. This chapter also evaluates the potential land use-related impacts associated with implementation of Plan Concept 1 and Plan Concept 2 of the Renewable Placer: Waste Action Plan.

13.2 Environmental Setting

The project site is located in unincorporated Placer County, between the cities of Roseville and Lincoln (Figure 1-1) on existing properties owned by Western Placer Waste Management Authority (WPWMA), at the intersection of Athens Avenue and Fiddyment Road (Figure 1-2). It includes three properties spanning 928 acres (Figure 1-3), as described in greater detail in Section 3.2 of Chapter 3, Project Description.

Placer County was the fastest-growing county in California between 2010 and 2020 (Department of Finance 2020). As a result of this population growth, the County has experienced changes in land use, particularly in the southwestern part of the County, referred to locally as South Placer County, where the cities of Roseville, Lincoln, and Rocklin are located. South Placer County experienced an annual population growth rate of 1.8 percent from 2010 to 2015 (Beacon Economics 2018). This level of growth was largely led by the City of Lincoln, which grew by over 3 percent per year from 2010 to 2018 (Census 2020a; Census 2020b). In 2010, approximately 38 percent of the 411,462 acres inventoried in Placer County were designated for agricultural use, while only 14 percent of the acres inventoried were categorized as urban and built-up land (DOC 2014). By 2016, nearly 1,700 acres designated for agricultural use in 2010 had been converted to other uses, and a total approximately 2,500 acres had been converted from other uses to urban and built-up land over the same period (DOC 2020).

13.2.1 Existing Land Use

Placer County identified new land-use designations in its 2013 General Plan update to promote more uniformity in terminology between the County General Plan and local community plans. Under the generalized land-use designations, of which there are 12, the center and western properties are generally designated for Public/Quasi-Public use, and the eastern property is generally designated for Industrial use (Placer County 2013). The project site is surrounded by agricultural lands. These surrounding lands are primarily used for cattle grazing and dry farming (fodder). The land-use designations in this area are shown on Figure 13-1.

Although the Placer County General Plan identifies generalized land-use designations for the site, it does not identify specific land-use designations, because the project is located within a community plan: the Sunset Area Plan (Placer County 2019a). The Sunset Area Plan was developed by Placer County's Community Development Resource Agency in 2019 and is intended to guide development of the approximately 8,100-acre area in southwestern Placer County, located directly west of State Route 65 between the Lincoln Crossing and Blue Oaks subdivisions.

Under the Sunset Area Plan, the entire project site has an Eco-Industrial land-use designation, which is intended for "solid waste-related management, processing, recycling, and composting operations, as well as industrial and manufacturing uses focused on alternative waste-to-energy technologies, recovery and reuse of materials, solid waste-related research and development, and related advanced manufacturing, perhaps in conjunction with nearby universities" (Placer County 2019a). Adjacent land uses to the east and west are designated as Innovation Center, while lands to the north and northwest are designated for Preserve/Mitigation Reserve and Urban Reserve, respectively (Placer County 2019a). Parcels south of the project site are designated as Campus Park under the Placer Ranch Specific Plan and are intended to be used for nonresidential mixed uses, including "professional office, research and development, commercial, and light industrial space" (Placer County 2019b). These land-use designations are shown on Figure 13-2.

13.2.2 Existing Zoning

The project site is located on lands zoned as Eco-Industrial (ECO) under the Sunset Area Plan. The intent of the ECO zone is to provide areas for industrial uses that emphasize ecology, waste reuse and sustainable salvaging, and remanufacturing (Placer County 2019a). The zoning designations on the project site and nearby parcels are shown on Figure 13-3.

13.3 Regulatory Setting

This section describes land-use policies and regulations applicable to the proposed project.

13.3.1 Federal

There are no federal land-use or planning regulations applicable to construction or operation of the proposed project.

13.3.2 State

There are no state land-use or planning regulations applicable to construction or operation of the proposed project.

13.3.3 Local

The WPWMA is a Joint Powers Authority (JPA) composed of Placer County and the cities of Lincoln, Rocklin, and Roseville to own and operate a regional recycling facility and sanitary landfill. As a JPA, the WPWMA considers local regulations and consults with local agencies, but the County and city regulations are not applicable, because the County and cities do not have jurisdiction over the proposed project. Accordingly, the following discussion of local goals and policies associated with land-use and planning resources is provided for informational purposes only.

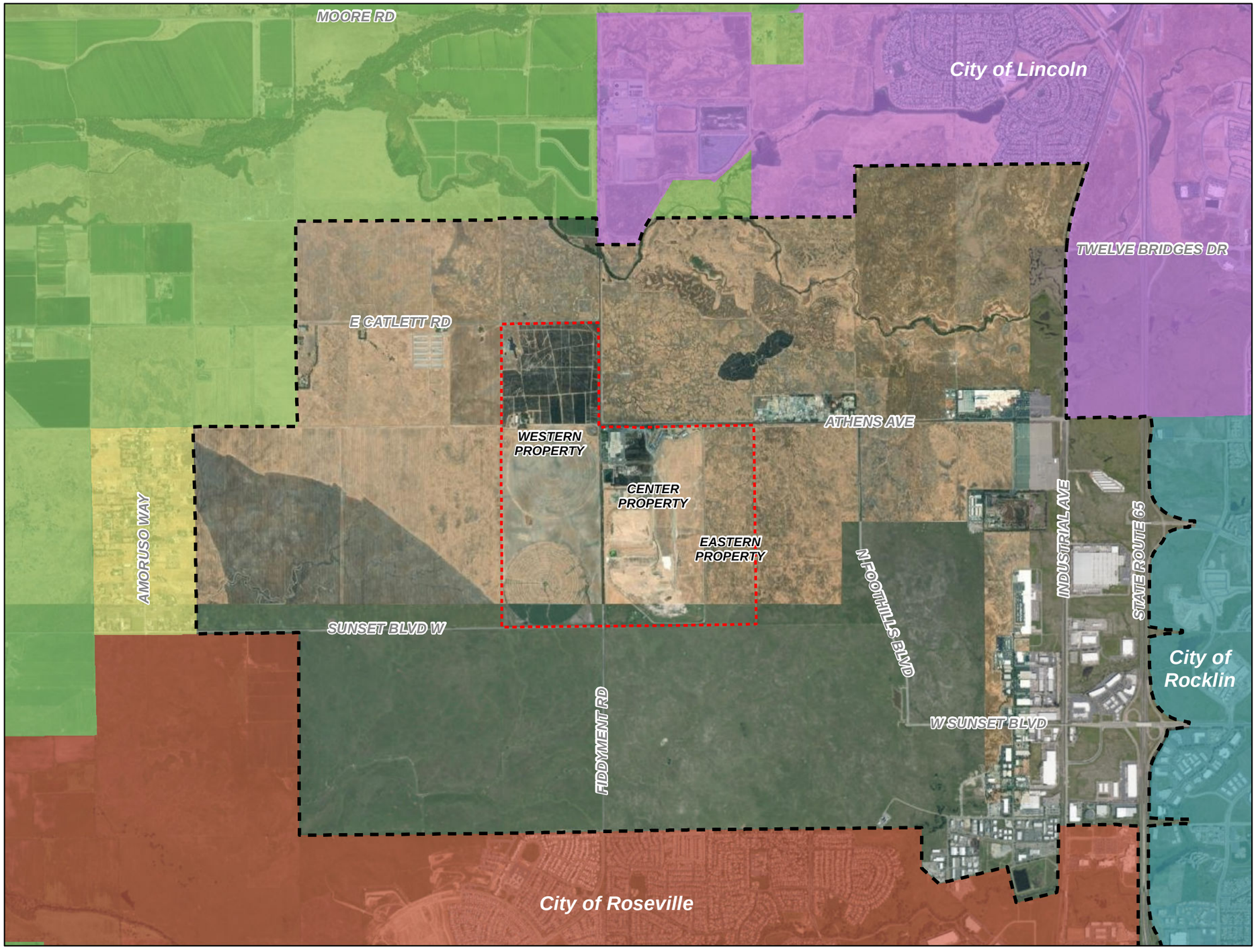

VICINITY MAP

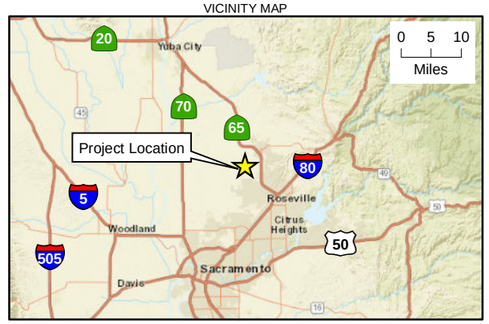

LEGEND

- Project Boundary

Land Use

- Sunset Area Plan Boundary
- City of Lincoln
- City of Rocklin
- City of Roseville
- Agriculture/Timberland - 80 Ac. Min.
- Rural Residential 1 - 10 Ac. Min.

N

0 0.5 1
Miles

Figure 13-1. Placer County General Plan Land Use
Draft Environmental Impact Report
Renewable Placer: Waste Action Plan
Placer County, California

Jacobs

\\dc1vs01\GISProj\WI\WPWMA\Maps\Report\EIR\Land_Use\General_Plan_Land_Use_201021.mxd 7/21/2021

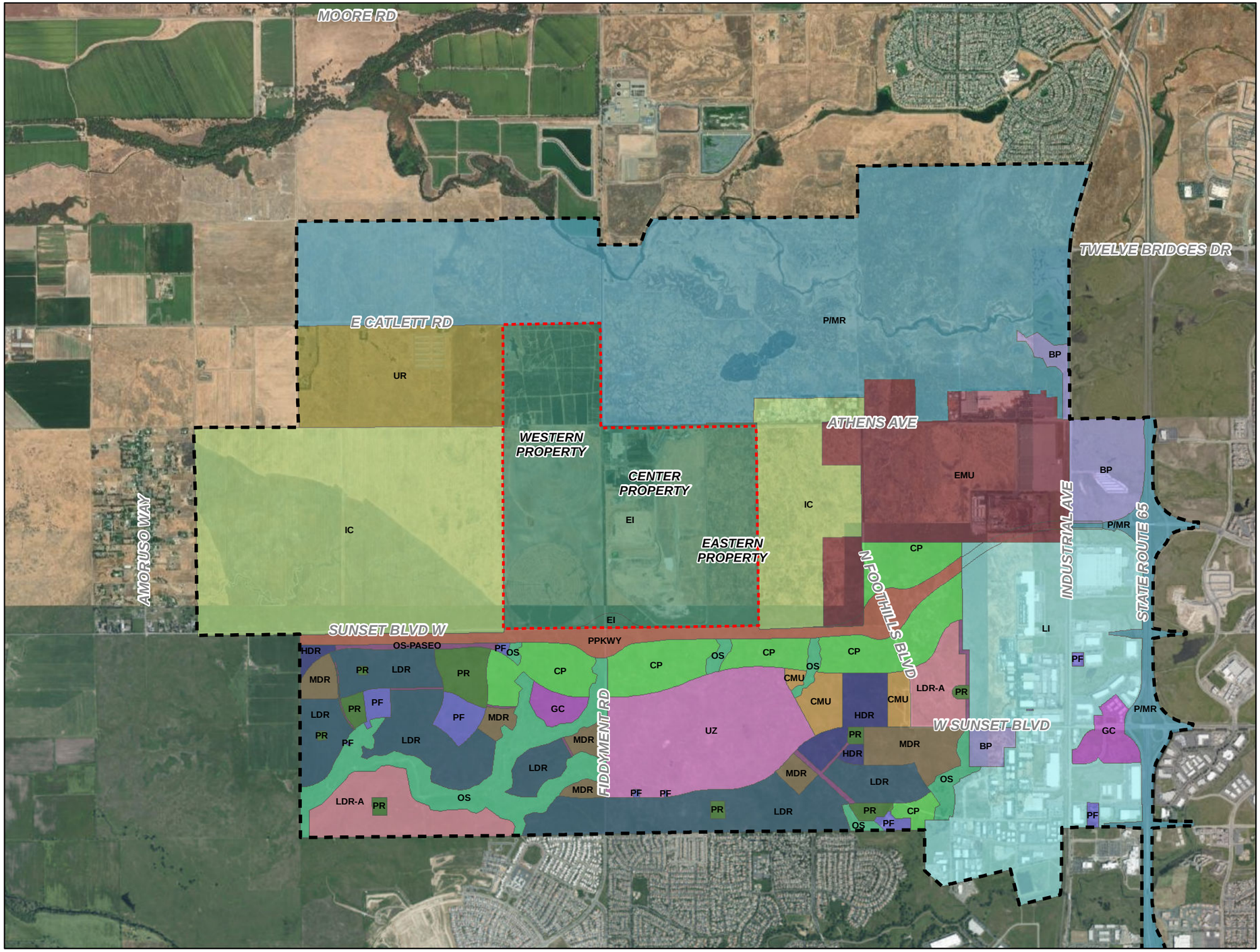

VICINITY MAP

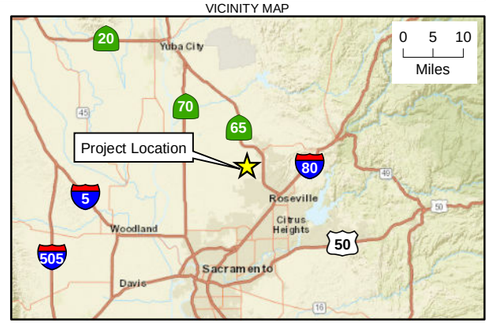

LEGEND

- Project Boundary

Land Use

- Sunset Area Plan Boundary
- Business Park (BP)
- Campus Park (CP)
- Commercial Mixed Use (CMU)
- Eco-Industrial (EI)
- Entertainment Mixed-Use (EMU)
- General Commercial (GC)
- High Density Residential 13 - 30 DU./Ac. (HDR)
- Innovation Center (IC)
- Light Industrial (LI)
- Low Density Residential 1 - 7 DU./Ac. (LDR)
- Low Density Residential Age-Restricted 1 - 7 DU./Ac. (LDR-A)
- Medium Density Residential 7 - 13 DU./Ac. (MDR)
- Open Space (OS)
- Open Space - Paseo (OS-PASEO)
- Park (PR)
- Placer Parkway (PPKWY)
- Preserve/Mitigation Reserve (P/MR)
- Public Facility (PF)
- University (UZ)
- Urban Reserve (UR)

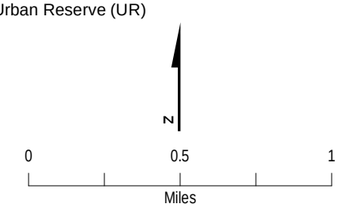

Figure 13-2. Sunset Area Plan Land Use
Draft Environmental Impact Report
Renewable Placer: Waste Action Plan
Placer County, California

Jacobs

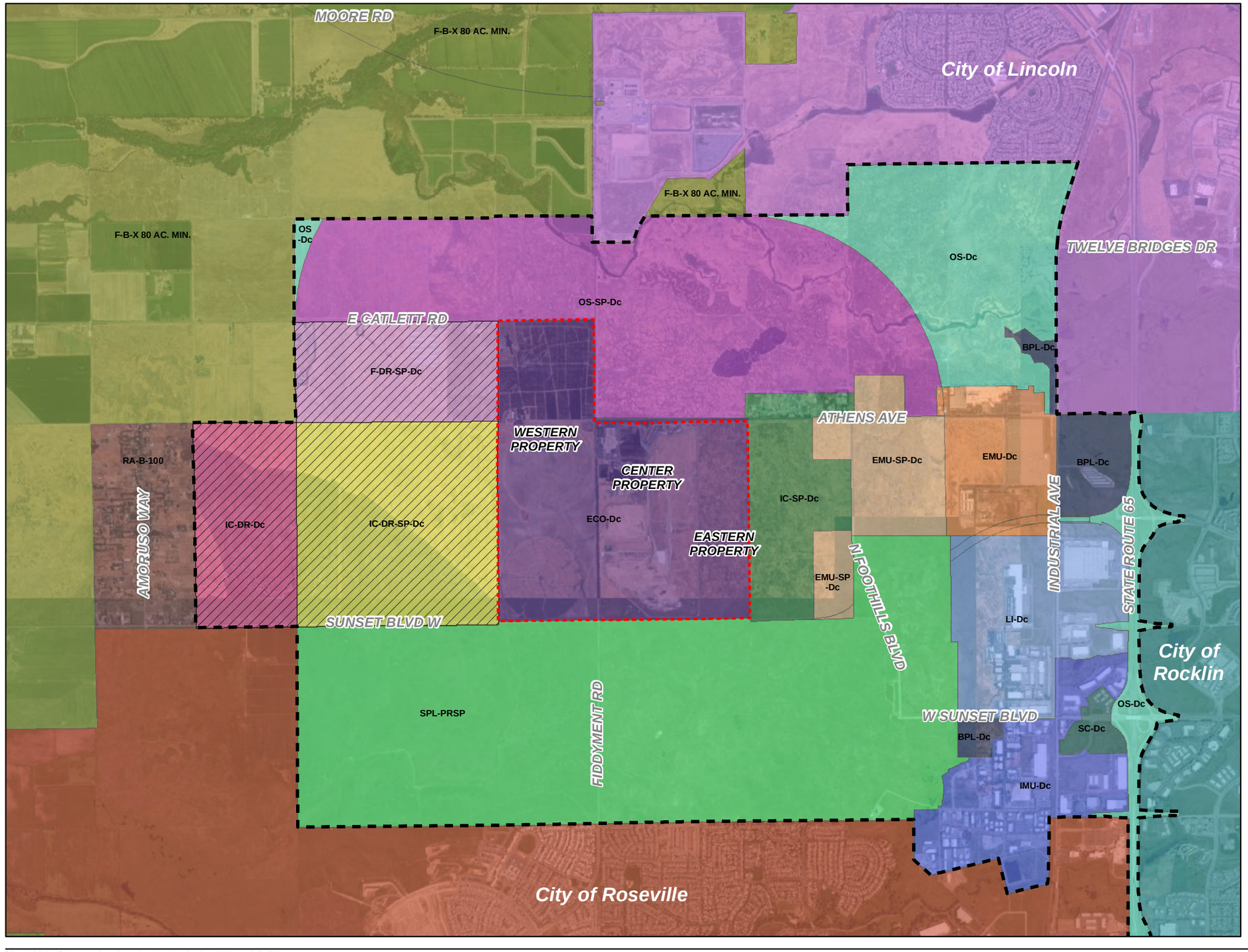

VICINITY MAP

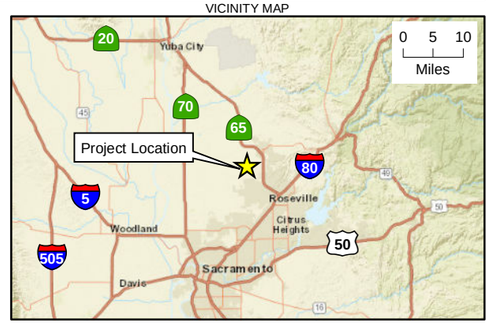

LEGEND

- Project Boundary

Zoning

- Sunset Area Plan Boundary
- City of Lincoln
- City of Rocklin
- City of Roseville
- Agricultural Residential (RA-B-100)
- Business Professional (BPL-Dc)
- Eco-Industrial (ECO-Dc)
- Entertainment Mixed-Use (EMU-Dc)
- Entertainment Mixed-Use Special Purpose (EMU-SP-Dc)
- Farm (F-B-X) 80 AC. MIN.
- Farm Special Purpose (F-DR-SP-Dc)
- Innovation Center (IC-DR-Dc)
- Innovation Center Special Purpose (IC-DR-SP-Dc)
- Innovation Center Special Purpose (IC-SP-Dc)
- Industrial Mixed-Use (IMU-Dc)
- Light Industrial (LI-Dc)
- Open Space (OS-Dc)
- Open Space Special Purpose (OS-SP-Dc)
- Service Commercial (SC-Dc)
- Placer Ranch Specific Plan (SPL-PRSP)
- Development Reserve (-DR)

N

0 0.5 1
Miles

Figure 13-3. Zoning
Draft Environmental Impact Report
Renewable Placer: Waste Action Plan
Placer County, California

Jacobs

Placer County General Plan.

The Placer County General Plan provides countywide goals that are the basis for evaluating development proposals and other land use-related activities within the County. The current General Plan, which was most recently updated in 2013, includes policies and implementation measures that support those goals. Goals and policies applicable to Land Use for Public and Quasi-Public Facilities Infrastructure are identified as follows:

Goal 1.F: To designate adequately sized, well-located areas for the development of public facilities to serve both community and regional needs.

- Policy 1.F.1: The County will encourage the concentration of public and quasi-public facilities. New and expanded government offices and other professional offices should be encouraged to locate on land near existing government offices.
- Policy 1.F.3: The County shall require public facilities, such as wells, pumps, tanks, and yards, to be located and designed so that noise, light, odors, and appearance do not adversely affect nearby land uses.

Sunset Area Plan.

The Sunset Area Plan identifies goals, policies, implementation programs, and standards for a wide range of issues affecting the use of land within the Sunset Area. It also includes a Land-Use Diagram, which specifies the type, location, and intensity of development within the Plan Area. In addition to a Policy Document that identifies applicable policies for the area, the Sunset Area Plan includes separately published Implementing Zoning Regulations and Corridor Design Standards and Guidelines. These regulations, standards, and guidelines specify the details intended to make certain that new development delivers on the vision of the Sunset Area Plan (Placer County 2018).

The specific goals and policies in the Sunset Area Plan that are directly relevant to the proposed project are presented in the following section. A discussion of the residential buffer requirement in the Sunset Area Plan is also included, as well as a discussion of environmental protection policies.

Design and Land Development Practices

Goal LU/ED-3: To promote high-quality design and land development practices in the Sunset Area.

- Policy LU/ED-3.1: High-Quality Design. The County shall require high-quality design in both the public and private realm to ensure an attractive setting for investment in planned uses in the Sunset Area, especially along key transportation corridors (e.g., Placer Parkway, Highway 65, Sunset Boulevard, Foothills Boulevard North, Athens Avenue, Fiddyment Road). All projects shall comply with the Placer County Street Improvements Ordinance by constructing the required frontage improvements and providing ultimate planned right-of-way dedications to the County. Except as otherwise provided in design guidelines for approved specific plans, this will include compliance with applicable provisions of the Sunset Area Corridor Design Standards and Guidelines, the Placer County Design Guidelines Manual and Landscape Design Guidelines, and the Placer County Land Development Manual, including the Placer County General Specifications and Engineering Design Details. Such design shall include appropriate buffering (e.g., distance, sound walls, fencing, and landscaping) between sensitive uses, such as residential uses, and the key transportation corridors listed above.
- Policy LU/ED-3.2: Environmentally Responsive Design. The County shall encourage buildings and sites to be designed in a manner that blends with existing natural conditions, including site topography, existing woodland vegetation, wetlands, stream channels, and other natural features. Where existing

resources are preserved by other policies and programs, adjacent buildings and other improved areas shall be designed in harmony with the preserved area and shall not seek to replace or dominate those resources.

- Policy LU/ED-3.4: Land Alteration. The County shall require that new discretionary development comply with the Placer County Grading Ordinance as well as incorporate sound soil conservation practices and minimize land alterations. Land alterations should comply with the following guidelines:
  a. Limit cuts and fills
  b. Limit grading to the smallest practical area of land
  c. Limit land disturbance and grading activities to the shortest practical amount of time
  d. Replant and stabilize graded areas to ensure establishment of plant cover before the next rainy season
  e. Create grading contours that blend with the natural contours onsite or with contours on property immediately adjacent to the area of development
- Policy LU/ED-3.8: Landscaping. The County shall require industrial, commercial, and office projects incorporate landscaping into site design for all areas not covered by hardscaping. All development projects shall include a substantial amount of landscaping along frontages adjacent to public rights-of-way, and perimeter landscaping for screening of parking lots, loading docks, and yard areas. Where appropriate, individual projects shall use a landscape theme that is consistent throughout the development area (e.g., within a thematic district, master planned project, or specific plan). All landscaping shall comply with the requirements of the Water Efficient Landscape Ordinance, including use of native species that are drought-resistant.

Eco-Industrial

Goal LU/ED-6: To support the Western Placer Waste Management Authority's efforts to diversify and expand its operations while protecting the viability of its facilities.

- Policy LU/ED-6.1: Innovation/Research and Development. The County shall support WPWMA initiatives to establish industrial and manufacturing uses focused on alternative waste-to-energy technologies, recovery and reuse of materials, solid waste-related research and development, and related advanced manufacturing. This includes efforts to collaborate with nearby universities to advance state-of-the-art approaches to these activities.
- Policy LU/ED-6.2: Land Use Changes near WPWMA Facilities. When considering land use changes near the Western Regional Sanitary Landfill (WRSL) and the WPWMA material recovery facility (MRF) operation, the County shall consider the regional value of these solid waste facilities and operations. To protect these facilities and operations from incompatible encroachment, as well as to protect new uses from nuisances generated by the landfill and MRF, new development shall be reviewed and approved on a project-by-project basis, considering proximity to the active operation of these facilities and predicated on the new development's ability to comply with the standards specified in Table 1-3 of this Plan.
- Policy LU/ED-6.3: WPWMA Land Use Compatibility. The County shall encourage businesses that are compatible with WPWMA land uses, such as businesses focused on the collection and conversion of waste, including but not limited to recycling, biomass, and production of organics for composting and mulching to be located in the Eco-Industrial District.
- Policy LU/ED-6.4: Composting Materials. The County shall encourage production of composting materials that meet standards to be used for applications such as landscaping and rural lands.

Sunset Area Plan Residential Buffer

The Sunset Area Plan established a buffer area that restricts residential development within 2,000 feet of WPWMA-owned properties. This buffer distance was reduced from a 1-mile buffer requirement for residential uses that was included in Placer County General Plan Policy 4.G.11. The Sunset Area Plan Final Environmental Impact Report (EIR) concluded that this reduction in the buffer requirement could result in land-use incompatibility because of residential development occurring closer to the WRSL in areas that would otherwise remain undeveloped under the General Plan residential buffer policy. The Final EIR stated that, based on a review of existing data regarding nuisance complaints from residents beyond 1 mile, it would be expected that new residents and users within the project area would complain about odor from the WRSL and that the number of complaints lodged about nuisance odors would increase. Impacts relative to consistency and compatibility of proposed residential land uses in the Sunset Area Plan with the WRSL were identified as potentially significant.

Mitigation measures were identified for specific plans, master plans, or development agreements approved within the Sunset Area Plan to reduce these land-use compatibility impacts. These mitigation measures included locating air intakes on the sides of the buildings most distant from the WRSL, requiring air filtration that exceeds Title 24 standards, requiring landscape buffer zones on all land uses adjacent to the WRSL, installing sound walls or other solid vertical structures between residences and the WRSL, and requiring written disclosures to initial and subsequent buyers, lessees, and renters.

The Sunset Area Plan Final EIR (Placer County 2019c) concludes that, although these mitigation measures would aid in increasing land-use compatibility, they would not eliminate the impact. The Final EIR therefore concludes that this impact would remain significant and unavoidable.

Sunset Area Plan Environmental Protection Policies

The Sunset Area Plan Final EIR (Placer County 2019c) describes the Sunset Area Plan policies specifically designed to protect environmental resources. Many of these policies require consistency with the requirements of the Placer County Conservation Plan. These policies are identified in this EIR at Chapter 7, Biological Resources. Other environmental protection policies identified in Chapter 7 address buffers around sensitive habitat. Additional policies and the chapter of this EIR in which they are discussed are as follows:

- Chapter 6, Air Quality and Odors: Required dust-control plans, required use of best available control technologies to control construction exhaust emissions, vehicle trip-reduction strategies, and vehicle idling restrictions
- Chapter 8, Cultural and Tribal Resources: Identification and protection of significant cultural resources, including archaeological and historical resources
- Chapter 9, Geology, Soils, and Paleontology: Identification and protection of paleontological resources
- Chapter 12, Hydrology and Water Quality: Grading restrictions during rainy seasons, inclusion of best management practices to protect water quality
- Chapter 14, Noise: Broadening of noise policy to emphasize potential conflicts between residential and nonresidential uses
- Chapter 17, Utilities and Energy: Evaluates consumption of energy resources

13.4 Impact Analysis and Mitigation Measures

13.4.1 Thresholds of Significance

The thresholds of significance for assessing impacts come from the California Environmental Quality Act (CEQA) Environmental Checklist. For land use and planning, the CEQA Checklist asks whether the project would:

- Physically divide an established community?
- Cause a significant environmental impact as a result of a conflict with any land-use plan, policy, or regulation adopted for the purpose of avoiding or mitigating an environmental effect?

13.4.2 Impact Analysis

This section describes the land-use and planning impacts associated with the two plan concepts.

IMPACT 13-1	**Physically Divide an Established Community**. The proposed project is located on WPWMA-owned land designated for Public/Quasi-Public uses. The project site is located within a rural area and would not physically divide an established community. Therefore, there would be **no impact**.

Plan Concept 1

The proposed project is located in a rural, undeveloped area of unincorporated Placer County. An established community, the Lincoln Crossing subdivision is located approximately 2 miles northeast of the eastern property's northern boundary. The nearest established community, the Blue Oaks subdivision, is located one mile south of the eastern property's southern boundary. Although the proposed project would be situated between these two communities, they are located in different cities: Lincoln Crossing in the City of Lincoln and Blue Oaks in the City of Roseville. In addition, the existing and proposed uses at the site would be consistent with the site's Eco-Industrial land use and zoning designations. Therefore, the proposed project would not physically divide these established communities. Additionally, the Sunset Area Plan assumes the project site would be developed with the types of uses specifically identified in Plan Concept 1. Therefore, there would be no impact.

Plan Concept 2

Impacts related the physical division of an established community as a result of implementation of Plan Concept 2 would be the same as described for Plan Concept 1.

IMPACT 13-2	**Consistency with Land-Use Plans and Policies.** The proposed project is consistent with the site's land use and zoning designations, as identified in the Sunset Area Plan. The proposed project would not conflict with the goals and policies included in the Sunset Area Plan that have been adopted for the purpose of avoiding or mitigating an environmental effect. Therefore, there would be **no impact**.

Plan Concept 1

The Sunset Area Plan is the primary plan governing land use for the project area. As noted in Section 13.2, the proposed project would be located on lands both designated and zoned for Eco-Industrial use, which

explicitly includes solid waste management and related practices and processes, as well as specific industrial and manufacturing uses. The Sunset Area Plan also includes numerous goals and policies adopted with the intention of avoiding or mitigating adverse environmental impacts, including effects to Air Quality, Biological Resources, Cultural Resources, Geology and Soils, Hydrology and Water Quality, Noise, and Energy. These goals and policies are discussed within the regulatory sections of this EIR in Chapters 6, 7, 8, 9, 12, 14, and 17, respectively. The proposed project would not conflict with these environmental protection policies and would further employ design, construction, and operations best practices to support these policies. The project design would be informed by Policies LU/ED-3.1, LU/ED-3.2, LU/ED-3.4, and LU/ED-3.8 related to High-Quality Design, Environmentally Responsive Design, Land Alteration, and Landscaping, respectively, Also, because the project would not include the development of new residential uses and would not expand beyond the site's long-established boundary, it would not contribute to the significant and unavoidable land-use compatibility impact identified in the Sunset Area Plan EIR associated with reducing the 1-mile buffer requirement for residential uses included in Placer County General Plan Policy 4.G.11. As such, Plan Concept 1 would not conflict with the goals and policies included in the Sunset Area Plan that have been adopted for the purpose of avoiding or mitigating an environmental effect, and there would be no impact.

Plan Concept 2

Impacts related to consistency with existing land-use plans, policies, and regulations as a result of implementation of Plan Concept 2 would be the same as described for Plan Concept 1.

13.5 References

Beacon Economics. 2018. *South Placer County Workforce Housing Needs Assessment*. February.

California Department of Conservation (DOC). 2014. *California Farmland Conversion Report 2008–2010*. April.

California Department of Conservation (DOC). 2020. *California Farmland Conversion Report 2014–2016*. April.

Placer County. 2013. *Placer County General Plan*. May 21.

Placer County. 2019a. *Sunset Area Plan*. October.

Placer County. 2019b. *Placer Ranch Specific Plan*. December 10.

Placer County. 2019c. *Final Environmental Impact Report for the Sunset Area Plan/Placer Ranch Specific Plan*. October.

State of California, Department of Finance. 2020. *E-4 Population Estimates for Cities, Counties, and the State, 2011-2020, with 2010 Census Benchmark*. Sacramento, California, May.

United States Census Bureau (Census). 2020a. American Community Survey Demographic and Housing Estimates, Lincoln City California, 2010. Accessed October 8, 2020. https://data.census.gov/cedsci/table?g=1600000US0641474&d=ACS%205-Year%20Estimates%20Data%20Profiles&tid=ACSDP5Y2010.DP05&moe=false&hidePreview=true.

United States Census Bureau (Census). 2020b. American Community Survey Demographic and Housing Estimates, Lincoln City California, 2018. Accessed October 8, 2020.

https://data.census.gov/cedsci/table?g=1600000US0641474&d=ACS%205-Year%20Estimates%20Data%20Profiles&tid=ACSDP5Y2018.DP05&moe=false&hidePreview=true.

14. Noise

This chapter describes noise in the proposed project area and evaluates the potential impacts from noise sources associated with implementing Plan Concept 1 and Plan Concept 2 of the Renewable Placer: Waste Action Plan. These two plan concepts include similar design elements, but the locations and characteristics of the elements vary between the two plans.

14.1 Environmental Setting

14.1.1 Fundamentals of Noise

Noise is generally defined as sound that is loud, disagreeable, unexpected, or unwanted. Airborne sound results from small fluctuations of air pressure above and below atmospheric pressure as perceived by the ear.

Sound and the Human Ear

Because of the ability of the human ear to detect a wide range of sound-pressure fluctuations, sound-pressure levels (SPL) are expressed in logarithmic units called decibels (dB) to avoid a very large and awkward range in numbers. The sound-pressure level in decibels is calculated by taking the log of the ratio between the actual sound pressure and the reference sound pressure (20 microPascals) squared.

Because decibels are logarithmic units, ordinary arithmetic cannot be used. Caltrans (2015) explains "a doubling of sound energy corresponds to a 3-dB increase. In other words, when two identical sources are each producing sound of the same loudness, the resulting sound level at a given distance would be 3 dB higher than one source under the same conditions. For example, if one automobile produces an SPL of 70 dB when it passes an observer, two cars passing simultaneously would not produce 140 dB—rather, they would combine to produce 73 dB. Under the decibel scale, three sources of equal loudness together produce a sound level 5 dB louder than one source." The Minnesota Pollution Control Agency's *A Guide to Noise Control in Minnesota* (2015) similarly notes that "a doubling in sound energy yields an increase of three decibels" as depicted on Figure 14-1.

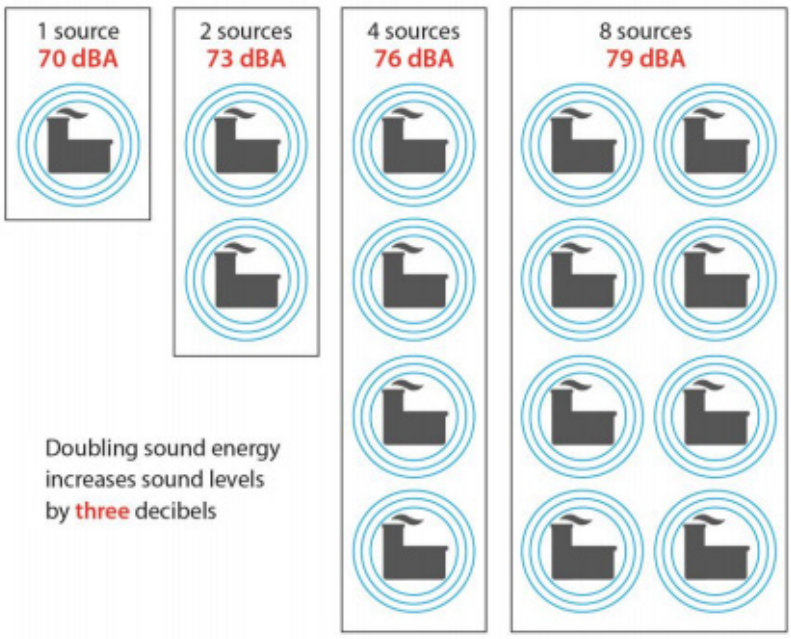

Figure 14-1. Effects of Doubling Sound Level Energy
Source: Minnesota Pollution Control Agency 2015.

The A-weighting network measures sound in a similar fashion to how a person perceives or hears typical environmental sounds, as the A-weighting approximates the frequency response of the average young ear when listening to typical community sounds. For general environmental or community sounds (for example, traffic), A-weighted decibels (dBA) yield a strong correlation with how people perceive acceptable and unacceptable sound levels. Table 14-1 presents typical A-weighted sound levels from common activities.

Table 14-1. Typical A-Weighted Noise Levels

Common Outdoor Activities	Noise Level (dBA)	Common Indoor Activities
	— 110 —	Rock band
Jet fly-over at 1,000 feet		
	— 100 —	
Gas lawn mower at 3 feet		
	— 90 —	
Diesel truck at 50 feet at 50 mph		Food blender at 3 feet
	— 80 —	Garbage disposal at 3 feet
Noisy urban area, daytime		
Gas lawn mower, 100 feet	**— 70 —**	Vacuum cleaner at 10 feet
Commercial area		Normal speech at 3 feet
Heavy traffic at 300 feet	**— 60 —**	
		Large business office
Quiet urban daytime	**— 50 —**	Dishwasher next room
Quiet urban nighttime	**— 40 —**	Theater, large conference room (background)
Quiet suburban nighttime		
	— 30 —	Library
Quiet rural nighttime		Bedroom at night, concert hall (background)
	— 20 —	
		Broadcast or recording studio
	— 10 —	
Lowest threshold of human hearing	**— 0 —**	Lowest threshold of human hearing

Source: Caltrans 2013.
Note:
mph = mile(s) per hour

Caltrans (2015) notes,

> [U]nder controlled conditions in an acoustical laboratory, the trained, healthy human ear is able to discern 1-dB changes in sound levels, when exposed to steady, single-frequency ("pure-tone") signals in the midfrequency (1,000 Hz–8,000 Hz) range. In typical noisy environments, changes in noise of 1 to 2 dB are generally not perceptible. However, it is widely accepted that people are able to begin to detect sound level increases of 3 dB in typical noisy environments. Further, a 5-dB increase is generally perceived as a distinctly noticeable increase, and a 10-dB increase is generally perceived as a doubling of loudness. Therefore, a doubling of sound energy (e.g., doubling the volume of traffic on a highway) that would result in a 3-dB increase in sound, would generally be perceived as barely detectable.

Sound Propagation

Caltrans (2015) identifies that

> [S]ound from a localized source (i.e., a point source) propagates uniformly outward in a spherical pattern. The sound level attenuates (or decreases) at a rate of 6 decibels for each doubling of distance from a point source. Highways consist of several localized noise sources on a defined path, and hence can be treated as a line source, which approximates the effect of several point sources. Noise from a line source propagates outward in a cylindrical pattern, often referred to as cylindrical spreading. Sound levels attenuate at a rate of 3 decibels for each doubling of distance from a line source.

The surface characteristics between the source and the receptor may result in additional sound absorption or reflection. Atmospheric conditions, such as wind speed, temperature, and humidity, may affect noise levels. Furthermore, the presence of a barrier between the source and the receptor may also attenuate noise levels. Caltrans (2015) notes that "a barrier that breaks the line of sight between a source and a receptor will typically result in at least 5 dB of noise reduction. Taller barriers provide increased noise reduction."

All buildings provide some exterior-to-interior noise reduction even if the windows are open, when a 10-dBA reduction is expected. A typical light-frame building provides is noted to provide an exterior-to-interior noise reduction of 20 dBA with closed-sash windows or 25 dBA with storm windows. A masonry building with single-glazed closed windows provides a reduction of 25 dBA, whereas double-glazed provides 30 dBA (FHWA 2011, referenced in Caltrans 2013).

Noise Descriptors

The noise descriptors most often encountered when dealing with traffic, community, and environmental noise are defined as follows (Caltrans 2015):

- L_{max} (Maximum Noise Level): Lmax is the highest instantaneous sound level measured during a specified period.
- L_{eq} (Equivalent Noise Level): Leq represents an average of the sound energy occurring over a specified period. In effect, Leq is the steady-state sound level containing the same acoustical energy as the time-varying sound that actually occurs during the same period. The 1-hour A-weighted equivalent sound level (Leq[h]) is the energy average of A-weighted sound levels occurring during a 1-hour period and is the basis for noise abatement criteria used by Caltrans and Federal Highway Administration (FHWA).
- L_{dn} (Day-Night Noise Level): Ldn is the energy average of A-weighted sound levels occurring over a 24-hour period, with a 10-dB penalty applied to A-weighted sound levels occurring during nighttime hours between 10 p.m. and 7 a.m.

Effects of Noise on Humans

The effects of noise on people can be listed in three general categories:

- Subjective effects of annoyance, nuisance, and dissatisfaction
- Interference with activities such as speech, sleep, and learning
- Physiological effects such as startling and hearing loss

In most cases, environmental noise produces effects in the first two categories only. However, workers in industrial plants may experience noise effects in the third category. No completely satisfactory way exists to measure the subjective effects of noise, or to measure the corresponding reactions of annoyance and dissatisfaction. This lack of a common standard results from the wide variation in individual thresholds of annoyance and habituation to noise.

Vibration.

Vibration is the periodic oscillation of a medium or object, which may be directly felt or in some cases heard if the vibration induces rattling. Sources of ground-borne vibrations (include natural phenomena (such as earthquakes, volcanic eruptions, sea waves, landslides) or human-made causes (such as explosions, machinery, traffic, trains, construction equipment).

Figure 14-2 illustrates common ground-borne vibration sources and the human and structural response ranging from approximately 50 vibration decibels (VdB) (typical background vibration) to 100 VdB (threshold of risk of minor potential cosmetic damage for fragile buildings). Difficulty completing tasks, noted as reading on a computer screen, occurs at 90 VdB (FTA 2018).

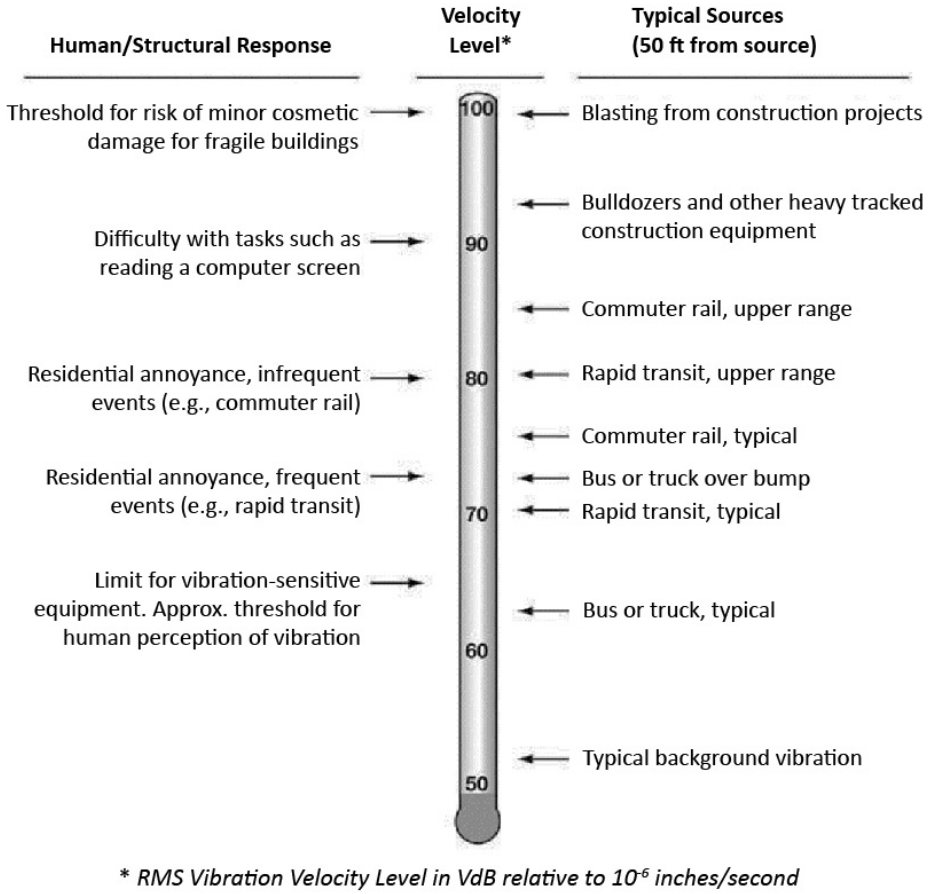

Figure 14-2. Typical Levels of Ground-Borne Vibration
Source: FTA 2018.

For most projects, the highest levels of vibration occur during construction and assessment to evaluate the potential damage to nearby buildings. The California Department of Transportation's recent *Transportation and Construction Vibration Guidance Manual* (2020) notes, "There are no Caltrans or Federal Highway Administration standards for vibration and it is not the purpose of this manual to set standards." Rather, agencies such as Caltrans provide "a synthesis of these criteria that can be used to evaluate the potential for damage and annoyance from vibration-generating activities." The Federal Transit Administration's *Transit Noise and Vibration Impact Assessment Manual* (2018) establishes construction damage criteria in terms of peak particle velocity (PPV). These criteria are presented in Table 14-2 and range from a threshold 0.12 inch per second (in/sec) for "buildings extremely susceptible to vibration damage" to 0.5 in/sec for "reinforced concrete, steel or timber (no plaster)" (FTA 2018). These limits and building categories align with Caltrans' (2020) summary of the Swiss Association of Standardization Vibration Damage Criteria for continuous sources. The Swiss criteria provide additional details regarding the building category and provide a single event limit. These additions are noted in italics in Table 14-2.

Table 14-2. FTA Construction Vibration Damage Criteria

Building Category	PPV (in/sec)	*Single Event PPV (in/sec)*
1. Reinforced concrete, steel, or timber (no plaster) *(buildings in steel or reinforced concrete, such as factories, retaining walls, bridges, steel towers, open channels, underground chambers and tunnels with and without concrete alignment)*	0.5	*1.2*
2. Engineered concrete and masonry (no plaster) *(buildings with foundation walls and floors in concrete, walls in concrete or masonry, stone masonry retaining walls, underground chambers and tunnels with masonry alignments, conduits in loose material)*	0.3	*0.7*
3. Nonengineered timber and masonry buildings *(buildings as mentioned previously but with wooden ceilings and walls in masonry)*	0.2	*0.5*
4. Buildings extremely susceptible to vibration damage *(construction very sensitive to vibration; objects of historic interest)*	0.12	*0.3*

Note: *Italics* are from Caltrans (2020) summary of Swiss Vibration Damage Criteria.

Caltrans (2020) also notes that "in most cases, vibration induced by typical construction equipment does not result in adverse effects on people or structures. Noise from the equipment typically overshadows any meaningful ground vibration effects on people."

The criteria given in Section 6.2 of the FTA Manual for general vibration assessment may be used to assess annoyance or interference with vibration-sensitive activities caused by vibration. Sensitive land use categories for vibration assessment are presented in Table 14-3 (adapted from FTA Manual Table 6-1).

Table 14-3. Land Use Categories for Vibration Assessment

Land Use Category	Land Use Type	Description of Land Use Category
-	Special Buildings	This category includes special-use facilities that are very sensitive to vibration and noise that are not included in the other categories listed in this table and require special consideration. However, if the building will rarely be occupied when the source of the vibration (for example, a train) is operating, there is no need to evaluate for impact. Examples of these facilities include concert halls, TV and recording studios, and theaters.
1	High Sensitivity	This category includes buildings where vibration levels, including those below the threshold of human annoyance, would interfere with operations within the building. Examples include buildings where vibration-sensitive research and manufacturing[a] is conducted, hospitals with vibration-sensitive equipment, and universities conducting physical research operations. The building's degree of sensitivity to vibration is dependent on the specific equipment that will be affected by the vibration. Equipment moderately sensitive to vibration, such as high-resolution lithographic equipment, optical microscopes, and electron microscopes with vibration isolation systems, are included in this category.[b] For equipment that is more sensitive, a Detailed Vibration Analysis must be conducted.
2	Residential	This category includes all residential land use and buildings where people normally sleep, such as hotels and hospitals. Transit-generated ground-borne vibration and noise from subways or surface-running trains are considered to have a similar effect on receivers.[c]
3	Institutional	This category includes institutions and offices that have vibration-sensitive equipment and have the potential for activity interference such as schools, churches, doctors' offices. Commercial or industrial locations, including office buildings, are not included in this category unless there is vibration-sensitive activity or equipment within the building. As with noise, the use of the building determines the vibration sensitivity.

[a] Manufacturing of computer chips is an example of a vibration-sensitive process.

[b] Standard optical microscopes can be affected at vibration levels below the threshold of human annoyance.

[c] Even in noisy urban areas, the bedrooms will often be in quiet buildings with effective noise insulation. However, ground-borne vibration and noise are experienced indoors, and building occupants have practically no means of reducing their exposure. Therefore, occupants in noisy urban areas are just as likely to be exposed to ground-borne vibration and noise as those in quiet suburban areas.

Indoor ground-borne vibration impact criteria are provided for each land use category according to the frequency of the event as provided in Table 14-4. Ground-borne vibration impact criteria range from 65 VdB for any event adjacent to buildings where vibration would interfere with interior operations, which, based on the FTA Manual Table 5-5, is also the approximate threshold of perception for many humans, to 83 VdB for infrequent events occurring adjacent to institutional land uses with primarily daytime use.

Table 14-4. Indoor Ground-Borne Vibration Impact Criteria for General Vibration Assessment

Land Use Category	Ground-Borne Vibration Impact Levels (VdB re 1 µin/sec)		
	Frequent Events[a]	Occasional Events[b]	Infrequent Events[c]
Category 1: Buildings where vibration would interfere with interior operations	65 VdB[d]	65 VdB[d]	65 VdB[d]
Category 2: Residences and buildings where people normally sleep	72 VdB	75 VdB	80 VdB
Category 3: Institutional land uses with primarily daytime use	75 VdB	78 VdB	83 VdB

Source: FTA Manual Tables 6-2 and 6-3.

[a] Frequent events are defined as more than 70 events per day.

[b] Occasional events are defined as between 30 and 70 events per day.

[c] Infrequent events are defined as fewer than 30 events per day.

[d] This criterion limit is based on levels that are acceptable for most moderately sensitive equipment, such as optical microscopes. Vibration-sensitive manufacturing or research will require detailed evaluation to define the acceptable vibration levels. Limiting vibration levels in a building often requires special design of the heating, ventilation, and air conditioning (HVAC) systems and stiffened floors.

Notes:

FTA does not establish criteria that consider the number of days events occur.

µin/sec = microinch(es) per second

14.1.2 Local and Regional Noise Setting

As depicted on Figure 14-3, the project site is surrounded by agricultural lands. These surrounding lands are primarily used for cattle grazing and dry farming (fodder). Industrial uses (for example, batch plant, trucking facility, aggregate facilities, wood pallet reclamation) are approximately 1,200 feet to the east of center property and immediately to the east of the eastern property on Athens Avenue. Other than the WRSL, the project site and surrounding lands are relatively flat.

An existing caretaker residence is located on the project site directly west of the intersection of Athens Avenue and Fiddyment Road within the western property. The caretaker within this residence is responsible for the leased agricultural lands on the western property south of Athens Avenue owned by the Western Placer Waste Management Authority (WPWMA).

The closest existing offsite residence is located over 5,000 feet northwest of the existing Material Recovery Facility (MRF) and 1,300 feet west of the western property (as shown on Figure 14-3). Additional isolated residences (shown on Figure 14-3) are located farther to the west on lands designated in the Sunset Area Plan (SAP) as Urban Reserve. Existing residential neighborhoods are located 1.5 miles and 1 mile to the west and south, respectively, of the project site. No other sensitive noise receptors are located within 1 mile of the project site. The Thunder Valley Casino Resort is located approximately 2 miles to the east of the project site, and the nearest airport, the Lincoln Regional Airport, is located approximately 4.5 miles to the north.

The existing noise environment within the project vicinity is influenced by surface transportation noise emanating from vehicular traffic on Fiddyment Road and Athens Avenue. Traffic on these roadways is generated from the industrial uses within the project vicinity, including the WPWMA's facility as well as local traffic traveling between Roseville, Lincoln, and State Route 65.

14.1.3 Local Noise Sources

The WPWMA uses the 314-acre center property for solid waste management activities. The WPWMA facility is open 365 days per year to receive waste materials. Waste Recovery includes MRF operations, compost operations, construction and demolition (C&D) waste operations, public waste drop-off area operations, and household hazardous waste facility operations. Waste Recovery operations are permitted to receive waste and recyclable materials from 6:00 a.m. to 7:30 p.m., Monday through Saturday, and from 6:00 a.m. to 5:00 p.m. on Sundays and designated holidays. Permitted material processing hours are from 6:00 a.m. to 11:30 p.m., Monday through Sunday. Additional facility maintenance and cleanup work may take place from 4:00 p.m. to 6:00 a.m., Monday through Sunday.

Waste Disposal operations comprise operation of the Western Regional Sanitary Landfill (WRSL) and receipt of inert materials. The WRSL is permitted to receive and dispose of materials from Monday through Saturday, 7:00 a.m. to 7:30 p.m., and Sunday from 8:00 a.m. to 5:00 p.m. Ancillary operations, including equipment servicing and startup, removal of temporary daily cover material, and preparation of the daily cell to receive waste, are allowed to occur between 6:00 a.m. and 7:00 a.m., Monday through Saturday, and between 7:00 a.m. and 8:00 a.m. on Sunday. Other onsite operations, such as application of daily cover and landfill-related construction, may extend to 8:30 p.m.

Primary noise-producing activities on the center property are summarized as follows:

Material Recovery Facility Building Operation – The majority of the residential and commercial solid waste received at the WPWMA facility is sent directly to the MRF building for processing. Noise is produced by equipment operation, including front-end loaders, walking floor pit conveyors, material bailers, and from waste processing equipment. Noise is also generated from vehicles delivering materials to the MRF, backing up (that is, backup alarms), tipping waste, and exiting the MRF building and site. Although the MRF has open doors for vehicle access, the majority of the building is enclosed, which minimizes offsite noise propagation.

Organics Management Operation – The organics management operation consists of composting green waste from commercial and residential haulers (with a small amount of food waste received as part of a pilot-level study). Noise is produced from the vehicles delivering and tipping materials at the site; by chipping and grinding operations, using mobile equipment located on concrete pads; and by operation of a diesel-powered windrow turner or loader.

Construction and Demolition Materials Processing Operation – C&D materials processing operations include two distinct areas: the C&D operation area (that includes a covered receiving area and a C&D materials processing line) and the inerts area. At the C&D materials processing area, material is delivered and sorted to recover salvageable items, and non-recovered materials and fines are transported to the WRSL for disposal and use as alternative daily cover. Noise is produced by trucks delivering material and transporting materials to the WRSL, and by equipment such as front-end loaders, the walking floor pit conveyor, and the process line. Noise may also result from crushing or grinding of various inert materials for reuse onsite.

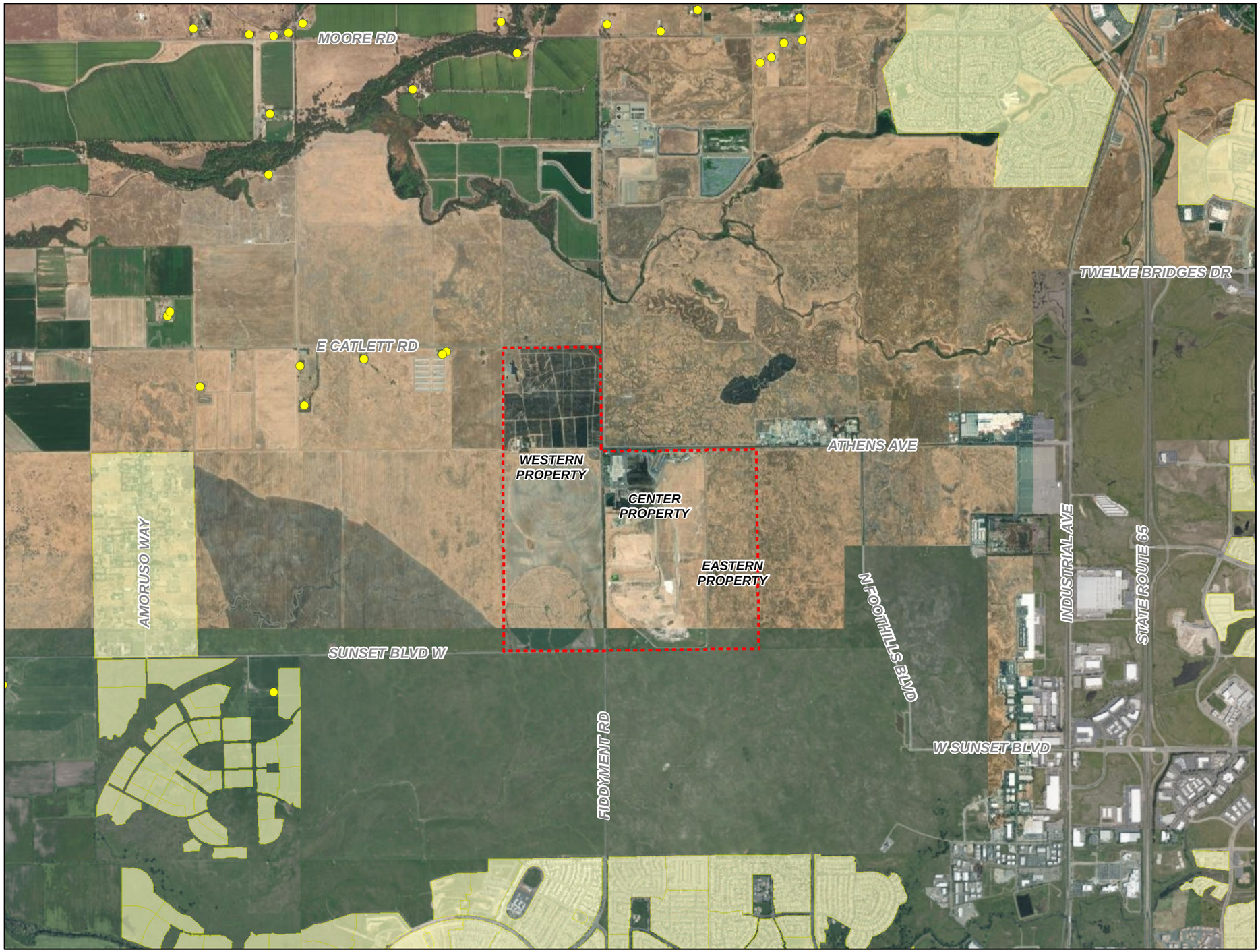

VICINITY MAP

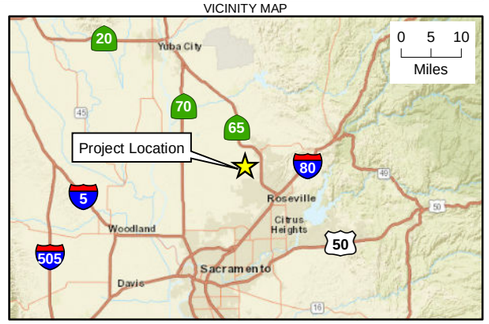

LEGEND

- Project Boundary
- Residence
- Residentially Zoned

N

0 0.5 1
Miles

Figure 14-3. Location of Existing Residences
Draft Environmental Impact Report
Renewable Placer: Waste Action Plan
Placer County, California

Jacobs

Public Waste Drop-off Area – The public waste drop-off area currently accepts municipal solid waste, C&D, electronic wastes, household hazardous waste, tires, and appliances. Noise is produced from the vehicles delivering and tipping materials within the drop-off area and transporting these materials to other areas of the site for processing.

WRSL Operation – Of the tonnage delivered to the WRSL for disposal, a significant portion first goes through the MRF building, with some tonnage that is direct haul to the landfill. Noise is produced by trucks carrying waste material to the landfill working face and equipment used to spread and compact the waste and place daily cover.

The western and eastern properties are generally not sources of noise other than the noise generated by model airplanes flown by a model airplane club that leases space within the northern portion of the western property from the WPWMA.

14.2 Regulatory Setting

14.2.1 Federal

While there are no federal regulations that limit overall environmental noise levels, federal guidance documents address environmental noise and regulations for specific sources (for example, aircraft or federally funded highways). No federal noise limits are applicable to this project.

14.2.2 State

The California Division of Occupational Safety and Health, better known as Cal/OSHA, has established standards that address occupational noise exposure. The State of California has not established community or environmental noise limits. Instead, *California Government Code* Section 65302 requires that each county and city prepare and adopt a comprehensive long-range general plan; Section 65302(f) requires a noise element to be included in the general plan.

14.2.3 Local

The WPWMA is a Joint Powers Authority (JPA) composed of Placer County and the cities of Lincoln, Rocklin, and Roseville to own and operate a regional recycling facility and sanitary landfill. As a JPA, the WPWMA considers local regulations and consults with local agencies, but the County and city regulations are not applicable, because the County and cities do not have jurisdiction over the proposed project. Accordingly, the following discussion of local goals and policies associated with noise is provided for informational purposes only. Although the WPWMA is an independent government agency that is not required to comply with the County's policies, the WPWMA intends to implement a proposed project that is generally consistent with these policies.

Placer County General Plan

The Noise Element of the Placer County General Plan (Placer County 2013) establishes noise goals and policies for land uses within the County. The relevant portions of goals 9.B, 1.E, 1.N, and 9.A and the associated policies are summarized in the following sections with portions particularly relevant to the WPWMA's establishment of noise impact significance thresholds included in **bold**.

Goal 9.B: To ensure that areas designated for industrial uses pursuant to Goal 1.E. and Policy 1.E.1. are protected from encroachment by noise-sensitive land uses.

Policies:

9.B.1. The County shall require that new noise-sensitive land uses established next to existing industrial areas be responsible for self-mitigating noise impacts from industrial activities.

9.B.2. The County shall apply noise standards in a manner consistent with encouraging the retention, expansion, and development of new businesses pursuant to Goal 1.N. and Policy 1.N.2.

9.B.3. Because many industrial activities and processes necessarily produce noise which will likely be objectionable to nearby non-industrial land uses, existing and potential future industrial noise emissions shall be accommodated in all land use decisions.

Goal 1.E: To designate adequate land for and promote development of industrial uses to meet the present and future needs of Placer County residents for jobs and maintain economic vitality.

Policy 1.E.1. The County shall only approve new industrial development that has the following characteristics:

- Sufficient buffering from residential areas to avoid impacts associated with noise, odors and the potential release of hazardous materials
- Minimal significant adverse environmental impacts

Goal 1.N: To maintain a healthy and diverse local economy that meets the present and future employment, shopping, recreational, public safety, and service needs of Placer County residents and to expand the economic base to better serve the needs of residents.

Policy 1.N.2. The County shall encourage the retention, expansion and development of new businesses, especially those that provide primary wage-earner jobs, by designating adequate land and providing infrastructure in areas where resources and public facilities and services can accommodate employment generators.

Goal 9.A identifies the following goal: "To protect County residents from the harmful and annoying effects of exposure to excessive noise" and establishes additional policies, including the following:

9.A.1. New development of noise-sensitive uses shall not be permitted where the noise level due to non-transportation noise sources will exceed the noise level standards of Table 9-1 as measured immediately within the property line of the new development, unless effective noise mitigation measures have been incorporated into the development design to achieve the standards specified in Table 9-1 [reproduced in this document as Table 14-5].

9.A.2. Noise created by new proposed non-transportation noise sources shall be mitigated so as not to exceed the noise level standards of Table 9-1 [reproduced in this document as Table 14-5] as measured immediately within the property line of lands designated for noise-sensitive uses, provided, however, the noise created by occasional events occurring within a stadium on land zoned for university purposes may temporarily exceed these standards as provided in an approved Specific Plan.

9.A.3. The County shall continue to enforce the State Noise Insulation Standards (*California Code of Regulations*, Title 24) of the *California Building Code* and *Placer County Code* Article 9.36, Noise.

Table 14-5. Allowable Ldn Noise Levels within Specified Zone Districts[a]

Zone District of Receptor	Property Line of Receiving Use	Interior Spaces[b]
Residential Adjacent to Industrial[c]	60	45
Other Residential[d]	50	45
Office or Professional	70	45
Transient Lodging	65	45
Neighborhood Commercial	70	45
General Commercial	70	45
Heavy Commercial	75	45
Limited Industrial	75	45
Highway Service	75	45
Shopping Center	70	45
Industrial	--	45
Industrial Park	75	45
Industrial Reserve	--	--
Airport	--	45
Unclassified	--	--
Farm	(see footnote e)	--
Agriculture Exclusive	(see footnote e)	--
Forestry	--	--
Timberland Preserve	--	--
Recreation & Forestry	70	--
Open Space	--	--
Mineral Reserve	--	--

[a] Overriding policy on interpretation of allowable noise levels: Industrial-zoned properties are confined to unique areas of the County and are irreplaceable. Industries which provide primary wage-earner jobs in the County, if forced to relocate, will likely be forced to leave the County. For this reason, industries operating upon industrial zoned properties must be afforded reasonable opportunity to exercise the rights/privileges conferred upon them [by] their zoning. Whenever the allowable noise levels herein fall subject to interpretation relative to industrial activities, the benefit of the doubt shall be afforded to the industrial use.

Where an industrial use is subject to infrequent and unplanned upset or breakdown of operations resulting in increased noise emissions, where such upsets and breakdowns are reasonable considering the type of industry, and where the industrial use exercises due diligence in preventing as well as correcting such upsets and breakdowns, noise generated during such upsets and breakdowns shall not be included in calculations to determine conformance with allowable noise levels.

[b] Interior spaces are defined as any locations where some degree of noise-sensitivity exists. Examples include all habitable rooms of residences, and areas where communication and speech intelligibility are essential, such as classrooms and offices.

[c] Noise from industrial operations may be difficult to mitigate in a cost-effective manner. In recognition of this fact, the exterior noise standards for residential zone districts immediately adjacent to industrial, limited industrial, industrial park, and industrial reserve zone districts have been increased by 10 dB as compared to residential districts adjacent to other land uses.

For purposes of the Noise Element, residential zone districts are defined to include the following zoning classifications: AR, R-1, R-2, R-3, FR, RP, TR-1, TR-2, TR-3, and TR-4.

[d] Where a residential zone district is located within an [Special Purpose] (-SP) combining district, the exterior noise level standards are applied at the outer boundary of the -SP district. If an existing industrial operation within an -SP district is expanded or modified, the noise level standards at the outer boundary of the -SP district may be increased as described above in these standards.

Where a new residential use is proposed in an -SP zone, an Administrative Review Permit is required, which may require mitigation measures at the residence for noise levels existing and/or allowed by use permit as described under "Notes" above, in these standards.

[e] Normally, agricultural uses are noise insensitive and will be treated in this way. However, conflicts with agricultural noise emissions can occur where single-family residences exist within agricultural zone districts. Therefore, where effects of agricultural noise upon residences located in these agricultural zones is a concern, an Ldn of 70 dBA will be considered acceptable outdoor exposure at a residence.

Applicable to new projects affected by or including nontransportation noise sources.

- Except where noted otherwise, noise exposures will be those which occur at the property line of the receiving use.
- Where existing transportation noise levels exceed the standards of this table, the allowable Ldn shall be raised to the same level as that of the ambient level.
- If the noise source generated by, or affecting, the uses shown above consists primarily of speech or music, of if the noise source is impulsive in nature, the noise standards shown above shall be decreased by 5 dB.
- Where a use permit has established noise level standards for an existing use, those standards shall supersede the levels specified in Table 9-1 [reproduced here as Table 14-5] and Table 9-3 [not included in this section]. **Similarly, where an existing use that is not subject to a use permit causes noise in excess of the allowable levels in Table 9-1 [reproduced here as Table 14-5] and Table 9-3 [not included in this section], said excess noise shall be considered the allowable level.** If a new development is proposed which will be affected by noise from such an existing use, it will ordinarily be assumed that the noise levels already existing or those levels allowed by the existing use permit, whichever are greater, are those levels actually produced by the existing use.
- **Existing industry located in industrial zones will be given the benefit of the doubt in being allowed to emit increased noise consistent with the state of the art[40] at the time of expansion. In no case will expansion of an existing industrial operation because to decrease allowable noise emission limits. Increased emissions above those normally allowable should be limited to a one-time 5-dB increase at the discretion of the decision-making body.**
- **The noise level standards applicable to land uses containing incidental residential uses, such as caretaker dwellings at industrial facilities and homes on agriculturally zoned land, shall be the standards applicable to the zone district, not those applicable to residential uses.**
- Where no noise level standards have been provided for a specific zone district, it is assumed that the interior and/or exterior spaces of these uses are effectively insensitive to noise.

Placer County Noise Ordinance

Section 9.36 of the *Placer County Code* establishes a noise ordinance; Section 9.36.60 (A) states that "It is unlawful for any person at any location to create any sound, or to allow the creation of any sound, on property owned, leased, occupied or otherwise controlled by such person that:

1) Causes the exterior sound level when measured at the property line of any affected sensitive receptor to exceed the ambient sound level by five dBA; or
2) Exceeds the sound level standards as set forth in Table 1 [reproduced here as Table 14-6], whichever is the greater."

[40] *State of the art* should include the use of modern equipment with lower noise emissions, site design, and plant orientation to mitigate offsite noise impacts, and similar methodology.

Table 14-6. Sound Level Standards (Onsite)

Sound Level Descriptor	Daytime (7 a.m. to 10 p.m.)	Nighttime (10 p.m. to 7 a.m.)
Hourly Leq, dB	55	45
Maximum level, (Lmax) dB	70	65

Source: Placer County 2013.

Section 9.36.60 B states that "[e]ach of the sound level standards specified in [Table 14-7] shall be reduced by five dB for simple tone noises, consisting of speech and music." **However, in no case shall the sound level standard be lower than the ambient sound level plus 5 dB.**

Sensitive receptors are defined as "a land use in which there is a reasonable degree of sensitivity to noise. Such uses include single-family and multi-family residential uses, frequently used outbuildings, schools, hospitals, churches, rest homes, cemeteries, public libraries and other sensitive uses as determined by the enforcement officer."

Exemptions are provided in Section 9.36.030, which exempt construction as noted:

> Construction (e.g., construction, alteration or repair activities) between the hours of six a.m. and eight p.m. Monday through Friday, and between the hours of eight a.m. and eight p.m. Saturday and Sunday, [p]rovided, however, that all construction equipment shall be fitted with factory installed muffling devices and that all construction equipment shall be maintained in good working order.

Sunset Area Plan

The SAP contains the following specific goals and policies related to noise:

GOAL N-1: To protect County residents, employees, and visitors from the harmful and annoying effects of exposure to excessive noise.

> Policy N-1.1: Noise-Sensitive Uses. The County shall require discretionary development that includes noise-sensitive uses to incorporate effective noise mitigation measures into the development design to achieve the standards specified in Table 6-1 [reproduced here as Table 14-7].
>
> Policy N-1.2: Industrial Noise Considerations. Because many industrial activities and processes necessarily produce noise which could be objectionable to nearby non-industrial land uses, existing and potential future industrial noise shall be considered in all land use decisions in the Sunset Area and in the unincorporated areas outside of the Plan Area.
>
> Policy N-1.3: Non-Residential Noise Levels. Where proposed new, non-residential discretionary development has the potential to produce noise levels exceeding the performance standards of Table 6-1 [reproduced here as Table 14-6] for existing or planned noise-sensitive uses, the County shall require submission of an acoustical analysis as part of the environmental review process so that noise mitigation may be included in the project design. The requirements for the content of an acoustical analysis are listed in Table 6-2 [see Policy N-1.6, Acoustical Analysis].

Policy N-1.4: Acoustical Analysis. Where noise-sensitive land uses are proposed in areas exposed to existing or projected exterior noise levels exceeding levels specified in Table 6-3 or the performance standards of Table 6-1 [reproduced here as Table 14-7], the County shall require submission of an acoustical analysis consistent with requirements of this policy (included below) as part of the environmental review process so that noise mitigation may be included in the project design. At the discretion of the County, the requirement for an acoustical analysis may be waived provided that all of the following conditions are satisfied:

a) The development is for less than 10,000 square feet of total gross floor area;

The noise source in question consists of a single roadway or railroad for which up-to-date noise exposure information is available. An acoustical analysis will be required when the noise sources in question is a stationary noise source, or when the noise source consists of multiple transportation noise sources;

The existing or projected future noise exposure at the exterior of buildings which will contain noise-sensitive uses or within proposed outdoor activity areas does not exceed 65 dB Ldn/[Community Noise Equivalent Level] CNEL prior to mitigation;

The topography in the project area is essentially flat (i.e., noise source and receiving land use are the same grade); and

Effective noise mitigation, as determined by the County, is incorporated into the project design to reduce noise exposure levels specified in Table 6-1 [reproduced here as Table 14-7] or Table 6-3. Such measures may include the use of building setbacks, building orientation, noise barriers, and the standard noise mitigations contained in the Placer County Acoustical Design Manual. If closed windows are required for compliance with interior noise level standards, air conditioning or mechanical ventilations systems will be required.

Table 14-7. Allowable Noise Levels within Specified Zone Districts

Receptor Zone District	Noise Level (Ldn) at the Property Line of Receiving Use	Interior Spaces[a]
Farm (F) with a residence	70[b]	45
Farm (F) without a residence	Footnote c	Footnote c
Open Space (O)	Footnote c	Footnote c
General Commercial (C)	70	45
Highway Services (HS)	75	45
Office and Professional (OP)	70	45
Industrial Park (IP)	75	45
Industrial (I)	Footnote c	Footnote c
Business Park (BP)	70	45

Policy N-1.5: Noise Barriers. Where noise mitigation measures are required to achieve the standards of Table 6-1 reproduced here as Table 14-7] and 6-3, such measures shall focus on site planning and project

design. The use of noise barriers shall be considered as a means for achieving the noise standards only after all other practical design-related noise mitigation measures have been integrated into the project.

Policy N-1.6: Noise Exposure to Existing Sensitive Receptors. The County shall require proposed new stationary noise sources to be located a sufficient distance from sensitive receptors, such as residential uses, schools, parks, hospitals, and day care facilities. Minimum siting distance from sensitive receptors shall be as follows:

a) New loading dock or commercial delivery sources: 1,836 feet
b) New HVAC units: 440 feet
c) New mechanical generators: 500 feet
d) New parking lots: 50 feet
e) New overhead transmission lines and substations: 35 feet

If the above siting requirements cannot be achieved because of specific building locations or other site-specific constraints, the project applicant shall conform to the County's Noise Mitigation Guidelines.

14.3 Impact Analysis and Mitigation Measures

14.3.1 Thresholds of Significance

The thresholds of significance for assessing noise impacts originate from the California Environmental Quality Act Environmental Checklist but are more specifically defined based on local noise policies and regulations.

- Generation of a substantial temporary increase in ambient noise levels near the project in excess of standards established in the local general plan or noise ordinance, or applicable standards of other agencies. The applicable standard for temporary, construction-related noise is established in the *Placer County Noise Ordinance*, which exempts construction noise that occurs outside of the hours of 6:00 a.m. to 8:00 p.m., Monday through Friday, and 8:00 a.m. to 8:00 p.m., Saturday and Sunday (Section 9.36.030).
- Generation of a substantial permanent increase in ambient noise levels near the project in excess of standards established in the local general plan or noise ordinance, or applicable standards of other agencies. The applicable standards for a permanent increase in ambient noise levels are established in the Noise Element of the *Placer County General Plan*, the *Placer County Noise Ordinance*, and the noise policies of the SAP. For existing residences located on lands designated as Urban Reserve, the threshold is the greater of 70 L_{dn} at the property line of the receiving use, as specified for Farms with a residence in the SAP EIR (Table 14-7), or 5 dB above the existing ambient noise level, according to the Placer County General Plan and *Placer County Noise Ordinance* Section 9.36.60 (B). For existing residences located within residential-zoned areas, the threshold is the greater of 50 L_{dn} at the property line of the receiving use, according to the Placer County General Plan, or 5 dB above the existing ambient noise level, according to the Placer County General Plan and *Placer County Noise Ordinance* Section 9.36.60 (B).
- Generation of excessive ground-borne vibration or ground-borne noise levels in excess of 0.2 in/sec PPV or 80 VdB consistent with the residential criteria established by FTA (2018).

14.3.2 Impacts

This section describes the noise impacts associated with the two plan concepts, mitigation measures for identified significant impacts, and the level of impact significance following implementation of the identified mitigation measures.

IMPACT 14-1	**Construction Activity Noise Impacts**. Construction activities would result in temporary increases in ambient noise levels within the project vicinity. As specified in the *Placer County Noise Ordinance*, construction noise impacts that occur during acceptable hours are exempt from the Ordinance's noise level limits. Therefore, noise generated from construction activities would result in a **less-than-significant** impact on adjacent land uses.

Plan Concept 1

Construction activities associated with project implementation would result in temporary increases in ambient noise levels within the project vicinity. Construction of the following facilities would be expected to generate temporary construction noise impacts:

- Expanded and redesigned organics management operation
- Expanded and redesigned C&D materials processing operation
- Expanded and redesigned public waste drop-off area
- Additional landfill modules, including environmental monitoring and control systems
- Excavation of existing solid waste
- Stormwater ponds
- Road crossings
- Maintenance facility
- Administration building with education center and parking
- Upgraded entrance facilities, including site access and scale house
- Paved site entrance to western property
- Wastewater and fire protection lines
- Landscaping and fencing
- 300,000 square feet of building plus exterior infrastructure for industrial uses associated with complementary project elements

In addition, up to an additional 1.6 million square feet of industrial uses associated with the complementary and programmatic elements are considered programmatically.

Construction activities would occur over the life of the project as individual components are needed. Because of the WPWMA's resource and management constraints, the construction of multiple large-scale facility components would not typically occur in a single year.

Construction for buildings and the majority of the solid waste management and support facilities would include grading, clearing, and excavation associated with the site preparation phase; demolition of existing

concrete pads; pouring foundations and paving; building erection; infrastructure construction; and the application of architectural coatings, in addition to other miscellaneous activities. For the landfill modules and closure activities, construction would include excavating native soil, stockpiling excavated soil, installing a composite liner, installing a leachate collection and removal system prior to the modules use for waste disposal, and eventually placing final soil cover. The onsite equipment necessary for construction is anticipated to include scrapers, excavators, loaders, backhoes, haul trucks, and other miscellaneous construction equipment. Typical operating cycles may involve 2 minutes of full power followed by 3 to 4 minutes at lower settings. Construction associated with the complementary elements (considered both project and programmatically) would be similar in scope to those required for the solid waste and support facilities.

Noise would also be generated during the construction phase by increased truck traffic on the site. This would include onsite truck traffic associated with the transport of heavy materials and equipment to and from internal construction sites and the movement of heavy equipment within the construction site.

Noise levels from heavy equipment operations are provided in FHWA's *Roadway Construction Noise Model* (FHWA 2006) and the FTA's *Transit Noise and Vibration Impact Assessment Manual* (FTA 2018). The data represent the most recent and comprehensive tabulation of noise from common pieces of heavy equipment. Construction equipment noise levels are presented in Table 14-8.

Table 14-8. Construction Equipment Noise Levels

Equipment	Typical Noise Level 50 feet from Source, dBA	Equipment	Typical Noise Level 50 feet from Source, dBA
Air Compressor	80	Loader	80
Backhoe	80	Paver	85
Ballast Equalizer	82	Pneumatic Tool	85
Ballast Tamper	83	Pump	77
Compactor	82	Rail Saw	90
Concrete Mixer	85	Roller	85
Concrete Pump	82	Saw	76
Concrete Vibrator	76	Scarifier	83
Crane, Derrick	88	Scraper	85
Crane, Mobile	83	Shovel	82
Dozer	85	Truck	84
Generator	82	Impact Wrench	85
Grader	85	Jack Hammer	88

Source: FTA 2018.

During the project construction phases, noise from construction activities would contribute to the noise environment in the immediate project vicinity. Construction activities would be of short duration but would occur intermittently throughout the life of the facility operations.

The equipment noise levels presented in Table 14-8 indicate that the loudest construction equipment generally emits noise in the range of 80 dBA to 90 dBA at 50 feet. Noise at any specific receptor is dominated by the closest and loudest equipment. The types, numbers, and duration of equipment anticipated to be used near any specific receptor location will vary over time. A typical noise estimate was developed based on the general assumption of multiple pieces of loud equipment operating near each other. Specifically, the scenario evaluated uses five pieces of general construction equipment working near each other, as follows:

- One piece of equipment generating a reference noise level of 85 dBA at 50 feet at the edge of the construction or work area.
- Two pieces of equipment generating reference noise levels of 85 dBA located 50 feet farther away from the edge of construction or work area.
- Two more pieces of equipment generating reference noise levels of 85 dBA located 100 feet farther away from the edge of construction or work area.
- Usage factor (Adj_{usage}) is 1 (that is, equipment is operating continuously).
- Ground effect factor (G) is 0, representing hard ground (that is, a ground condition that does not result in additional attenuation).

Expected average construction noise levels at various distances, based on this conservative scenario, are presented in Table 14-9. Figure 14-4 includes a graphic representation of how these noise levels decrease with distance.

Table 14-9. Average Construction Noise Levels versus Distance

Distance from Activity (feet)	Average Noise Level (dBA)
50	87
100	83
200	78
400	73
800	67
1,600	62
3,200	56

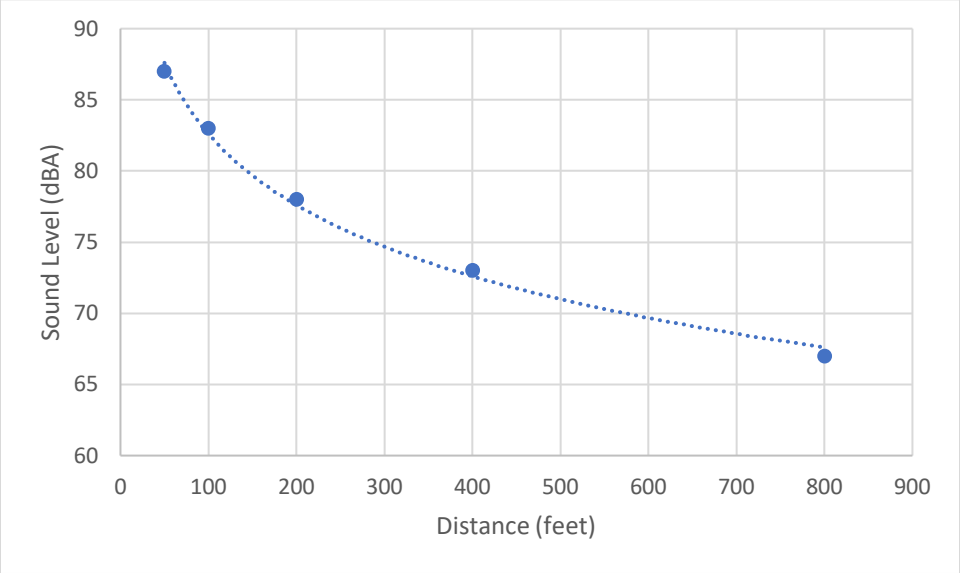

Figure 14-4. Plot of Sound Level versus Distance

For the nearest residence located approximately 1,300 feet west of the western site boundary within the area zoned for Urban Reserve, intermittent construction noise levels could be as high as 64 dBA when activities are located near the western site boundary and multiple pieces of construction equipment are operating at the same time. However, during most periods, construction activities would occur much farther away from the nearest residence, and noise levels would be substantially lower because of the attenuation with distance.

The *Placer County Noise Ordinance* exempts construction activities from the specified noise ordinance standards during the hours of 6:00 a.m. to 8:00 p.m., Monday through Friday, and 8:00 a.m. to 8:00 p.m., Saturday and Sunday (Section 9.36.030). Generally, if a construction project adheres to the construction times identified in the Noise Ordinance, construction noise is exempt. Because construction activities would not be expected to occur outside of these hours, construction noise associated with implementation of Plan Concept 1 on adjacent land uses would be considered less than significant.

The additional programmatic elements (1.6 million square feet) would use the similar construction equipment, and construction is similarly not expected to occur outside of the previously noted hours; thus, construction noise associated with the additional programmatic elements on adjacent land uses would be considered less than significant.

Plan Concept 2

As described in Chapter 3, Project Description, the primary differences between Plan Concept 1 and Plan Concept 2 are related to where various facilities would be located on the WPWMA's property and when various facilities would be developed. These differences do not change the conclusions identified for Plan Concept 1. As such, impacts related to construction noise associated with implementation of Plan Concept 2 would be the same as described for Plan Concept 1.

IMPACT 14-2	Increase in Operational Noise Levels. The expansion of the waste management operations would not be expected to generate noise levels above the established noise threshold. However, the development of the complementary and programmatic elements could include manufacturing or industrial uses that would exceed the established noise threshold. This operational noise impact would be considered **significant**.

Plan Concept 1

Solid waste management activities at the WPWMA facility would continue and expand under Plan Concept 1. Noise-generating activities would expand from the center property to the western and eastern properties, while the increase in activity level at the site would increase incrementally over the 30-year buildout of the project. These project elements include the expanded organics management operations, C&D processing operations, public waste drop-off operations, and the operation of supporting facilities such as the expanded administration building and parking, upgraded entrance and associated facilities, expanded stormwater ponds, upgraded maintenance facilities, and a new road crossing. In addition, the hours per day of MRF building operations would be expected to increase as material processing volumes increase, potentially up to 24 hours per day. However, in the event of nighttime operations, the MRF would not be receiving materials during these hours, the MRF building doors would be closed, and all MRF-related activities would be conducted inside this enclosed building.

Many of these solid waste elements would be operated on the western property with implementation of Plan Concept 1. For the landfill, the operation of the modules and associated environmental monitoring and control systems would continue on the center property and would extend onto the eastern property until final capacity is reached. The excavation of previously buried waste would occur as dictated by site operational requirements.

The Waste Recovery operations at the site would be expected to nearly double in response to the estimated doubling in the material quantities and vehicle volumes received at the facility at the end of the 30 years. Within this same time period, the Waste Disposal operations at the landfill would be expected to increase by approximately 50 percent. Overall operational changes from the solid waste project elements of the proposed project were estimated by scaling up 2018 operations consistent with the assumed 2 percent annual population and tonnage increase. Onsite equipment use at each of the major proposed solid waste project elements were estimated by scaling up 2018 equipment quantities based on the anticipated tonnage factor increase that the specific facility would process, not to exceed a factor increase of 2 because of assumed space constraints. The tonnage factor increases range from 1.55 to 2 times, depending on the facility. The potential 24-hour MRF building operations have been accounted for in the 2 percent per year growth. For complementary and programmatic elements, it is uncertain exactly what type of operations will be included in these activities.

Assuming a worst-case doubling of operating equipment and vehicle activity from existing operations at the site, the existing ambient noise levels would be expected to increase by approximately 3 dB. The noise levels associated with site operations experienced at existing residences in the project vicinity would increase from current conditions; however, the offsite noise levels associated with onsite operational activities would not increase greater than 3 dB. Because this increase would be less than the 5-dB increase in ambient noise levels established as the permanent noise level threshold, the solid waste management activities associated with Plan Concept 1 would result in a less-than-significant permanent noise impact.

Because the MRF operations occur within an existing building, noise generated from these operations are substantially attenuated. In addition, the MRF building's location at the northwestern corner of the center property is a substantial distance from the closest existing residences, located over 5,000 feet away, from which there have been no noise complaints. Therefore, MRF operations are not a currently a dominant source of sound at the residences, and the potential change in the hours of interior operations is not expected to alter the overall facility's sound profile at the residences.

In addition to solid waste management activities, up to 300,000 square feet of building plus exterior infrastructure are reserved in the northern part of the western property for the complementary elements. Under the programmatic level, for Plan Concept 1, up to 1.9 million square feet have been reserved for these elements primarily within the northern and southern extents of the western property, and on the center property. However, opportunities may arise that would support locating some of these complementary and programmatic elements nearer to the solid waste project elements or within areas not yet developed with solid waste project elements.

The development of these complementary and programmatic elements would increase offsite noise, depending on where the uses are located on the site. At the project level, complementary elements are initially anticipated to be located within the northern part of the western property, but because the complementary elements could include a wide variety of potential manufacturing and industrial uses, it cannot be determined in advance whether the ultimate uses would include activities that generate noise levels substantially higher than for typical manufacturing and industrial uses, although the uses are anticipated to occur within 300,000 square feet of building space. Therefore, development of the complementary elements could generate noise levels at receiving land uses that could exceed the established noise threshold, and this impact would be significant.

The additional programmatic elements (1.6 million square feet) could be located anywhere on the site, and it cannot be determined whether the noise levels at offsite sensitive receptors would exceed the established threshold. Programmatic elements also include a wide variety of potential manufacturing and industrial uses as described previously for the project level, and the level of noise generation associated with the uses is not yet defined. Therefore, development of the programmatic elements could generate noise levels at receiving land uses that could exceed the established noise threshold, and this impact would be significant.

Plan Concept 2

As described in Chapter 3, Project Description, the primary differences between Plan Concept 1 and Plan Concept 2 are related to where various facilities would be located on the WPWMA's property and when various facilities would be developed. These differences do not change the conclusions identified for Plan Concept 1.

Mitigation Measure 14-2. Increase in Operational Noise Levels.

The WPWMA shall conduct an acoustical evaluation of any facility proposed as part of the complementary and programmatic elements prior to issuance of building permits. The acoustical evaluation will document that either the proposed uses shall not generate noise levels greater than 5 dB above the existing ambient noise level generated from industrial facilities at the site or will be redesigned such that this threshold is not exceeded at existing receiving property boundaries.

Level of Significance after Mitigation.

Implementation of Mitigation Measure 14-2 requires that an acoustical evaluation be conducted prior to the issuance of building permits so that the established noise threshold is not exceeded. Because this mitigation would prevent the complementary and programmatic elements from exceeding noise levels above the establish threshold, the impact would be reduced to **less than significant** after mitigation.

IMPACT 14-3	**Exposure of Sensitive Uses to Vibrations.** The vibration levels generated by the construction and operation of the proposed solid waste management elements and the complementary and programmatic project elements would not expose residences within the project vicinity to excessive vibration levels. Therefore, this impact is considered **less than significant**.

Plan Concept 1

Construction activities and landfill operations have the potential to result in varying degrees of temporary ground-borne vibration, depending on the specific equipment used and operations involved. Vibration generated by construction equipment spreads through the ground and diminishes in magnitude with increases in distance. Table 14-10 displays vibration levels for typical construction equipment.

Table 14-10. Typical Construction Equipment Vibration Levels

Equipment	PPV at 25 feet (in/sec)	Approximate VdB at 25 feet[a]
Pile Driver (Impact – Upper Range)	1.518	112
Pile Driver (Impact – Typical)	0.644	104
Large Bulldozer	0.089	87
Caisson Drilling	0.089	87
Trucks	0.076	86
Jackhammer	0.035	79
Small Bulldozer	0.003	58

Source: FTA 2018

[a] VdB referenced to 1 μin/sec and based on the root mean square (RMS) velocity amplitude.

Bulldozers and other construction equipment would regularly be used in the construction of solid waste facilities at the site, including the construction of new landfill modules, compost pads, buildings, detention basins, and utility infrastructure. Onsite equipment would include the regular use of bulldozers to compact waste received at the landfill working face. Bulldozers and other heavy equipment would be used to excavate and relocate previously buried waste. Heavy equipment would also be used in the management of compost and C&D materials on the site. In addition, heavy trucks would be used to deliver waste material to the site and to move waste material around the site.

As referenced in Table 14-10, the largest vibration source is an impact pile driver. According to FTA, vibration levels associated with the upper range of an impact pile driver is 1.518 in/sec PPV and 112 VdB (referenced to 1 μin/sec) at 25 feet. Trucks generate lower vibration levels of 0.076 in/sec PPV and 86 VdB.

While impact pile driving is not anticipated, the risk of construction vibration damage from a pile driver is assessed by adjusting the PPV from the reference PPV of 1.581 at 25 feet to the actual distance from the equipment to the receiver by the application of Equation 7-2 in the FTA Manual, provided in Figure 14-5.

$$PPV_{equip} = PPV_{ref} \times (\frac{25}{D})^{1.5}$$ **Eq. 7-2**

where:

PPV_{equip} = the peak particle velocity of the equipment adjusted for distance, in/sec
PPV_{ref} = the source reference vibration level at 25 ft, in/sec
D = distance from the equipment to the receiver, ft

Figure 14-5. Propagation Adjustment for Peak Particle Velocity
Source: FTA 2018.

At the nearest sensitive receptor, approximately 1,300 feet from the western site boundary, the predicted PPV is 0.004 in/sec, which is less than the criteria of 0.12 for "Buildings extremely susceptible to vibration damage (construction very sensitive to vibration; objects of historic interest)".

To assess the risk of vibration annoyance from a pile driver, the RMS velocity (Lv, VdB) is adjusted from the Lv of 112 at 25 feet to the actual distance between the equipment and receiver by the application of Equation 7-3 in the FTA Manual, provided in Figure 14-6.

$$L_{v.distance} = L_{vref} - 30log(\frac{D}{25})$$ **Eq. 7-3**

where:

$L_{v.distance}$ = the rms velocity level adjusted for distance, VdB
L_{vref} = the source reference vibration level at 25 ft, VdB
D = distance from the equipment to the receiver, ft

Figure 14-6. Propagation Adjustment for Root Mean Squared Velocity

At the nearest sensitive receptor, approximately 1,300 feet from the western site boundary the predicted Lv is 61 VdB, which is less than the most restrictive residential criteria of 72 VdB.

Therefore, construction and operation of the solid waste facilities and waste management operations would not be expected to expose offsite sensitive receptors to excessive vibration levels even in the unlikely event that impact pile drivers are used.

In addition to solid waste management activities, complementary and programmatic elements may be developed on the WPWMA's properties. Under the project level, for Plan Concept 1, up to 300,000 square feet of building plus exterior infrastructure are reserved in the northern part of the western property for the complementary elements. Under the programmatic level, for Plan Concept 1, up to 1.6 million square feet have been reserved for these elements primarily within the northern and southern extents of the western property, and on the center property. However, opportunities may arise that would support

locating some of these complementary and programmatic elements nearer to the solid waste project elements or within areas not yet developed with solid waste project elements. The additional programmatic elements (1.6 million square feet) could be located anywhere on the site.

Construction vibration levels generated from the complementary and programmatic project elements would be similar to those associated with the construction of solid waste facilities at the site. Given the distance from the nearest residence, the anticipated industrial uses within the complementary and programmatic project elements would not be expected to generate vibration levels that would exceed the established vibration threshold. As a result, this impact is considered less than significant.

Plan Concept 2

As described in Chapter 3, Project Description, the primary differences between Plan Concept 1 and Plan Concept 2 are related to where various facilities would be located on the WPWMA's property and when various facilities would be developed. These differences do not change the conclusions identified for Plan Concept 1.

IMPACT 14-4	**Traffic-Generated Permanent Increases in Ambient Noise Levels.** The proposed project would not result in a noticeable increase in traffic noise levels at offsite sensitive receptors. Therefore, this impact is considered **less than significant**.

Plan Concept 1

The increase in daily traffic volumes resulting from implementation of the proposed project could generate increased noise levels along nearby roadway segments. To assess noise impacts caused by project-related traffic increases on the existing local roadway network, the increase in the number of vehicle trips generated by the proposed project was estimated.

Existing traffic noise levels for the primary roads used by vehicles delivering waste to the site were estimated in the SAP EIR (Placer County 2019) as summarized in Table 14-11.

Table 14-11. Modeled Existing Roadway Noise Levels Near the WPWMA Facility

Roadway Segment	From	To	Ldn/CNEL (dBA) at 100 feet from Roadway Centerline	Distance (feet) from Roadway Centerline to Ldn/CNEL Contour			
				70 dBA	65 dBA	60 dBA	55 dBA
State Route 65	Blue Oaks Boulevard	Sunset Boulevard	78.7	257	554	1,193	2,570
Athens Avenue	Fiddyment Road	Industrial Avenue	65.8	31	67	144	310
Industrial Avenue	Twelve Bridges Drive	Athens Avenue	64.6	26	55	119	257
Fiddyment Road	Placer Parkway	Athens Avenue	63.5	25	54	117	253
Sunset Boulevard	Foothills Boulevard	Industrial Avenue	65.0	28	59	128	275

Source: Placer County 2019.

Plan Concept 1 would increase traffic noise along local roadways used by project traffic. However, no sensitive land uses are located along Athens Avenue, Industrial Avenue, or Sunset Boulevard. Therefore, increases in traffic noise associated with implementing the proposed project on these roadways would not affect sensitive land uses, and this impact would be less than significant. Also, because of the high traffic volumes on State Route 65, the project's contribution of additional vehicles to this roadway would be relatively negligible. Therefore, the proposed project would not noticeably increase traffic noise along this State highway.

As identified in Table 14-11, for the segment of Fiddyment Road between Athens Avenue and the future alignment of Placer Parkway, existing noise levels were estimated to be between 60 and 65 dBA at distances between 54 and 117 feet from the roadway centerline. Similar noise levels would be expected for the segment of Fiddyment Road extending south from the future alignment of Placer Parkway through the Blue Oaks residential area. For this segment of Fiddyment Road, existing residences are located within 80 feet of the roadway centerline. However, masonry sound walls are currently in place parallel to Fiddyment Road that substantially attenuate traffic noise levels. Sound walls that block the line of site between the source and receiver would be expected to result in a minimum reduction of 5 dB (Caltrans 2015).

Plan Concept 1 is projected to increase the current average daily vehicle trips on Fiddyment Road by approximately 8 percent, from approximately 7,920 to a total of 8,530 average daily vehicle trips. A doubling of the number of daily vehicle trips is typically required to increase noise levels by 3 dBA (Caltrans 2015). Because the project would not be expected to double the traffic volumes on Fiddyment Road and because existing masonry sound walls are in place adjacent to the existing residences, the increase in traffic volumes associated with the proposed project would not be expected to substantially increase traffic noise levels experienced by residences adjacent to Fiddyment Road south of the project site. Therefore, traffic noise impacts would be considered less than significant.

Plan Concept 2

As described in Chapter 3, Project Description, the primary differences between Plan Concept 1 and Plan Concept 2 are related to where various facilities would be located on the WPWMA's property and when various facilities would be developed. These differences do not change the conclusions identified for Plan Concept 1.

14.4 References

California Department of Transportation (Caltrans). 2013. *Technical Noise Supplement to the Traffic Noise Analysis Protocol*. September. https://dot.ca.gov/-/media/dot-media/programs/environmental-analysis/documents/env/tens-sep2013-a11y.pdf.

California Department of Transportation (Caltrans). 2015. *Annotated Noise Study Report*. April.

Federal Highway Administration (FHWA). 2011. *2011. Highway Traffic Noise: Analysis and Abatement Guidance.* Washington, DC. Referenced in California Department of Transportation (Caltrans). 2013. *Technical Noise Supplement to the Traffic Noise Analysis Protocol*. September. https://dot.ca.gov/-/media/dot-media/programs/environmental-analysis/documents/env/tens-sep2013-a11y.pdf.

Federal Transit Administration (FTA). 2018. *Transit Noise and Vibration Impact Assessment Manual*. Report No. 0123. September. https://www.transit.dot.gov/sites/fta.dot.gov/files/docs/research-innovation/118131/transit-noise-and-vibration-impact-assessment-manual-fta-report-no-0123_0.pdf.

Minnesota Pollution Control Agency. 2015. *A Guide to Noise Control in Minnesota*. November. Accessed July 2021. https://www.pca.state.mn.us/sites/default/files/p-gen6-01.pdf#:~:text=The%20Minnesota%20Pollution%20Control%20Agency%20%28MPCA%29%20is%20empowered,basics%20of%20sound%20and%20noise%20regulation.%20Revised%202015.

Placer County. 2013. "Section 9: Noise." *Placer County General Plan.* May. *https://www.placer.ca.gov/DocumentCenter/View/8568/Noise-PDF*.

Placer County. 2019. *Sunset Area Plan Environmental Impact Report*. October. https://www.placer.ca.gov/2702/Sunset-Area-Plan---Placer-Ranch-Specific.

15. Public Services

This chapter describes existing public services in the proposed project study area and evaluates the potential impacts to public services from implementing Plan Concept 1 and Plan Concept 2 of the Renewable Placer: Waste Action Plan.

15.1 Environmental Setting

15.1.1 Fire Potential and Protection

Fire Potential and Operating Procedures

Different types of fires have the potential to occur within the proposed project study area. These types of fires, as well as general descriptions and their relationship to project operations, are presented in Table 15-1.

Table 15-1. Potential Fire Types, Descriptions, and Operations

Fire Type	Description of Fire Type	Associated Operations
Wildland Fire	Grass fire originating on- or offsite that spreads over the ground surface	Public Waste Drop-Off
		WRSL
		Vegetation Management
Facility Fire	Fire associated with or emanating from materials being received or processed or potentially from equipment	MRF
		C&D Materials Processing
		Public Waste Drop-Off
		WRSL
Compost Fire	Heat-generated fire occurring within the composting operation	Organics Management
Landfill Fire	Subsurface fire originating from the landfill from combustion within the waste mass	WRSL

Notes:
C&D = construction and demolition
MRF = Materials Recovery Facility
WRSL = Western Regional Sanitary Landfill

More information regarding the potential for these fires to occur and references regarding operating procedures for preventing and fighting the fires are included in the following sections.

Wildland Fire.

As described in Chapter 11 and presented on Figure 11-1, the fire threat level of the area surrounding the Western Placer Waste Management Authority (WPWMA) facility is categorized as moderate, but the area is at risk of smaller grassfires, especially during dry, hot summers. Accordingly, the WPWMA's Fire Prevention

Plan (WPWMA 2020) includes clearing flammable vegetation and waste according to *Public Resources Code*, Section 44151 that has been reviewed and approved by the Department of Forestry and Fire Protection. More detail on wildland fires is presented in Chapter 11, Hazards and Hazardous Materials and Wildfire.

Facility Fire.

A common cause of a fire at a solid waste facility is the dumping of burning or smoldering refuse (a "hot load") or the spontaneous combustion of waste materials. Examination for "hot loads" is conducted by scale house staff as the load passes through the scales, and then by spotters and equipment operators at the tipping area and working face. Screening of most wastes will be conducted at the scale house and MRF building, which reduces the potential for hot loads entering the WRSL.

Additional sources of facility fires can include electrical shortages and failures and combustion of lithium-ion batteries, pressurized tanks, fuels, fertilizer, or any number of other flammable containers or materials (Waste 360 2019). Operating procedures for preventing and controlling fires that may occur at the project site are included in the Transfer Processing Report (TPR) (WPWMA 2016), and more detailed information regarding emergency prevention and response is presented in the Nortech Incident Response Plan (Nortech 2020).

Compost Fire.

Operation of the compost facility has the potential to facilitate fires from the feedstock (which is a potential fuel source), the composting process, and storage of composted material (finished product). Inbound loads of compostable organic material may contain hot embers or ashes that could cause a fire. Scalehouse attendants, load checkers, and spotters are trained to identify hot loads.

The process of creating compost is essentially a naturally occurring, heat-generating, biological decomposition process. Fires can occur because of the heat generation resulting from the commercial composting environment. As such, standard operating procedures focus on preventing, controlling, and managing hot spots as they occur. Details regarding specific potential fire sources and fire prevention activities relative to organics management are disclosed in the WPWMA's Fire Prevention Plan (WPWMA 2020), with additional information presented in the Nortech Incident Response Plan (Nortech 2020).

Landfill Fire.

This section addresses subsurface fire potential relevant to the landfill only. Fires that would be caused by smoldering or burning refuse are addressed in the Facility Fire section for other operational areas. Subsurface landfill fires can occur under certain conditions, for example, when uncontrolled landfill gas is ignited by an external source, when a large amount of oxygen is introduced to an area of waste that is already at elevated temperature and undergoing active exothermic biological degradation, or when the temperature of the landfill exceeds 170 degrees Fahrenheit (°F) (CalRecycle 2021). An increasingly common source of landfill fires includes short-circuiting or heat generation from lithium-ion batteries, which have the potential to spontaneously combust or ignite flammable gases (Waste 360 2021). Landfill gas contains methane, which is combustible when mixed with a specific amount of air and exposed to an external ignition source (for example, a spark or flame). Landfill gas is controlled by the landfill liner, landfill cover, and the gas collection and control system (GCCS) that operates 24 hours a day, 7 days per week. Therefore, the risk of a fire associated with landfill gas is minimal; however, it can typically be identified if smoke or smoldering odor emanates from the GCCS or if the gas temperature in the GCCS exceeds 140° F (CalRecycle 2021).

Operating procedures for preventing and controlling fires that may occur at the project site are included in the TPR (WPWMA 2016), and more detailed information regarding emergency prevention and response is presented in the Nortech Incident Response Plan (Nortech 2020).

Fire Protection

The WPWMA's facility operator currently works to fight fires that originate onsite or spread to the site, but it relies on Placer County's Fire Department for assistance if the scale of the fire exceeds the facility's firefighting capabilities. Fire protection services in all of unincorporated Placer County, including the project site, are provided through a Cooperative Fire Protection Agreement with the Placer County Fire Department and the California Department of Forestry and Fire (CalFire). The County has eight career fire stations and five volunteer stations servicing 475 square miles and a population of 58,000 residents and businesses (Placer County 2020a). The nearest fire station is Station 77, Sunset Station, located approximately 2 miles east of the project area on Athens Avenue (Placer County 2020b).

Services provided by the Placer County Fire Department are based on the condition of the facilities and response times to calls for service. Insurance Services Office (ISO) ratings are also an indicator of service adequacy. In ISO classification ratings, which range from 1 to 10 (with 1 representing superior fire protection), the communities with the best fire department facilities, systems for water distribution, fire alarms and communications, and equipment and personnel receive a rating of 1 (Verisk 2021). Through General Plan Policy PFS-4.I.1, discussed later in the chapter, Placer County encourages local fire protection agencies in the County to maintain minimum ISO ratings of 4 in urban areas, 6 in suburban areas, and 8 in rural areas. Placer County Fire Department has an ISO rating of 3 for all areas within 5 miles of a fire station and 10 for areas outside this sphere. Placer County service levels for fire protection and emergency response require one firefighter per 900–1,150 people and two support or planning staff per 10,000–25,000 people. According to County staff, Station 77 has 19 firefighters and support staff serving 59,000 people. The station is in excellent condition with no reported infrastructure needs. Equipment includes a command vehicle, Type I fire engine, Type III fire engine, ladder truck, and utility vehicle. This station meets County service level standards (Placer County 2019b).

In addition to the cooperative agreement with CalFire, Placer County Fire Department has mutual aid agreements with the Pleasant Grove Fire Protection District and the City of Roseville Fire Department. Planned stations in the southwestern area of Placer County include Amoruso Ranch in the City of Roseville, Regional University, and Placer Vineyards. New stations are also planned for the City of Roseville within the Campus Oaks Master Plan area and the Sierra Vista Specific Plan area. New stations would be built commensurate with new development in those areas (Placer County 2019b).

In November 2012, the Placer County Board of Supervisors approved the formation of Community Facilities District (CFD) Number 2012-1 Sunset Industrial Area Services (CFD 2012-1) to fund ongoing fire protection and emergency services within the Sunset Area of unincorporated Placer County. CFD 2012-1 is intended to equitably spread costs of fire protection and emergency medical services to new development within the Sunset Area via a special assessment on the property taxes of annexed parcels.

The WPWMA was not, and currently is not, subject to annexation into CFD 2012-1. However, because the WPWMA regularly uses the emergency response services of Placer County Fire Station 77 located at 1200 Athens Avenue (typically in response to worker injuries, minor fires, and releases of unknown, potentially hazardous substances at the MRF), it entered into an agreement with Placer County to pay WPWMA's fair share for these services.

15.1.2 Police Protection

The perimeter of the WPWMA's center property is fenced with four-strand barbed wire, hog wire, or both, on the western, southern, and eastern sides. The northern side (Athens Road) is barricaded by a 6-foot-high chain-link fence. There are three access points to the center property: the main commercial entrance to the facility (off of Athens Avenue), the administrative entrance on Fiddyment Road, and a second access gate on Fiddyment Road for maintenance and monitoring access. All access points have locked gates.

As presented in Chapter 13, Land Use and Planning, the project area is located in a section of unincorporated Placer County referred to as the Sunset Area. All unincorporated areas of Placer County fall within the jurisdiction of the Placer County Sheriff's Office (Placer County 2020c). Although the County Sheriff's Office is located in North Auburn, approximately 15 miles northeast of the project area, law enforcement is provided to southern Placer County by the Sheriff's Office through the South Placer Substation located in the Town of Loomis, approximately 8 miles east of the project site (Placer County 2019b). The Placer County Sheriff's Office currently has sufficient staff to meet existing law enforcement services and meets County response time goals (Placer County 2019b).

The California Highway Patrol (CHP) serves as the primary law enforcement agency responsible for state highways, including State Route 65, located less than 2 miles east of the project area. CHP provides law enforcement, traffic control, accident investigation, and management of hazardous materials spill incidents on state highways (Cal OES 2014).

15.1.3 Schools and Parks

In the 2019–2020 school year, Placer County had a total of 75,208 students enrolled in 126 public elementary schools, junior high or middle schools, high schools, and other types of schools, including alternative and continuation, charter, and special education (Ed-Data 2020). The schools closest to the project site include Fiddyment Farm Elementary School and Diamond Creek Elementary School, both of which are located in Roseville, approximately 1.2 miles south of the western and eastern parcels, respectively. Several other schools are located more than 2 miles from the project site in the cities of Roseville and Rocklin.

Post-secondary public education opportunities in Placer County are provided through Sierra College, though plans to develop the Sacramento State Placer Center, an extension of the California State University-Sacramento campus, are in progress. The Center would be located approximately one-third of a mile south of the project area, within the Placer Ranch area (Placer County 2020d; Placer County 2019b).

The County of Placer Parks Division maintains 36 recreational facilities across Placer County, including 24 local and community parks, one regional park, several beaches on Lake Tahoe, a theater, a campground, two nature reserves, a bird sanctuary, and a community pool (Placer County 2020e). The nearest County-maintained park is the Doyle Ranch Park, located approximately 6 miles south of the project area. Several additional community and neighborhood parks and open spaces are proposed under the Placer Ranch Specific Plan (PRSP), including directly across Sunset Boulevard, south of the project site (Placer County 2019a; 2019b).

The City of Roseville Parks and Recreation Department has over 70 parks within the city limits, plus a number of other recreation and community facilities, including two golf courses, three libraries, a pool and aquatic center, and a number of other community facilities. Several of these parks—Laurel T. Stizzo Park, Harrigan Greens, Mel Hamel Park, and Leonard "Duke" Davis Park—are located just over 1 mile south of the project site (City of Roseville 2020).

The City of Lincoln operates 18 parks, a plaza, an auditorium, a community center, a pavilion, and a library within the city limits. Parks closest to the project area are the Dr. Nathan Dubin Park and Pete Demas Park, which are located approximately 1.9 and 2.1 miles northwest of the project site, respectively, in the Lincoln Crossing development (City of Lincoln 2014).

The City of Rocklin manages 36 developed parks and over 200 acres of open space. Parks nearest to the project site are Whitney Park and Margaret Azevedo, both of which are located approximately 2.7 miles east of the project site (City of Rocklin 2021).

15.1.4 Roadway Maintenance

The WPWMA facility is accessed from public roads that are maintained by Placer County. Because heavy trucks that access the site can contribute disproportionally to roadway maintenance requirements, the WPWMA has an agreement with the County to pay a per-ton fee specifically for road maintenance. The total funding provided varies depending on the tonnage of waste received at the site. In effect, the more trucks that deliver waste to the site, the higher the total fee paid to the County for road maintenance.

15.2 Regulatory Setting

This section describes federal, state, and local guidelines and regulations for evaluating potential public service impacts and identifying mitigation.

15.2.1 Federal

There are no federal regulations related to public services applicable to construction or operation of the proposed project.

15.2.2 State

Uniform Fire Code

The *Uniform Fire Code* (UFC) contains regulations related to construction, maintenance, and use of buildings. Topics addressed in the UFC include fire department access, fire hydrants, automatic sprinkler systems, fire alarm systems, fire and explosion hazards safety, hazardous materials storage and use, provisions intended to protect and assist fire responders, industrial processes, and many other general and specialized fire safety requirements for new and existing buildings and the surrounding premises. The UFC contains specialized technical regulations related to fire and life safety.

California Occupational Safety and Health Administration

In accordance with *California Code of Regulations* (CCR) Title 8, Section 1270, "Fire Prevention," and Section 6773, "Fire Protection and Fire Fighting Equipment," the California Occupational Safety and Health Administration has established minimum standards for fire suppression and emergency medical services. The standards include guidelines on the handling of highly combustible materials; fire hose sizing requirements; restrictions on the use of compressed air; access roads; and the testing, maintenance, and use of firefighting and emergency medical equipment.

California *Health and Safety Code*

State fire regulations are set forth in Section 13000 et seq. of the California *Health and Safety Code*, which include regulations for building standards (as set forth in the *California Building Code*); fire protection and

notification systems; fire protection devices, such as extinguishers; smoke alarms; and fire-suppression training.

Burning Wastes and Open Burning

Title 14 CCR Section 17407.1 regulates the burning of waste at solid waste handling and disposal facilities. Specifically, if burning wastes are received, they must be separated from other wastes and deposited in a safe area once extinguished. The Section also prohibits the open burning of solid waste.

15.2.3 Local

The WPWMA is a Joint Powers Authority (JPA) consisting of Placer County and the cities of Lincoln, Rocklin, and Roseville to own and operate a regional recycling facility and sanitary landfill. As a JPA, the WPWMA considers local regulations and consults with local agencies, but the County and city regulations are not applicable, as the County and cities do not have jurisdiction over the proposed project. Accordingly, the following discussion of local goals and policies associated with public services is provided for informational purposes only.

Placer County General Plan

The Placer County General Plan (2013) includes the following relevant goals and policies regarding public services:

Facility and Service Standards

GOAL 4.B: To ensure that adopted facility and service standards are achieved and maintained through the use of equitable funding methods.

- Policy 4.B.1: The County shall require that new development pay its fair share of the cost of all existing facilities it uses based on the demand for these facilities attributable to the new development; exceptions may be made when new development generates significant public benefits (e.g., low income housing, needed health facilities) and when alternative sources of funding can be identified to offset foregone revenues.
- Policy 4.B.2: The County shall require that new development pay the cost of upgrading existing public facilities or construction of new facilities that are needed to serve the new development; exceptions may be made when new development generates significant public benefits (e.g., low income housing, needed health facilities) and when alternative sources of funding can be identified to offset foregone revenues.

Law Enforcement Protection.

Goal 4.H. To provide adequate law enforcement services to deter crime and to meet the growing demand for services associated with increasing population and commercial and industrial development in the County.

- Policy 4.H.2. The County Sheriff will strive to maintain the following average response times for emergency calls for service:
    a) 6 minutes in urban areas
    b) 8 minutes in suburban areas
    c) 15 minutes in rural areas
    d) 20 minutes in remote rural areas

- Policy 4.H.4. The County will require new development to develop or fund sheriff facilities that, at a minimum, maintain the standards listed in 4.H.2.
- Policy 4.H.5. The County will consider public safety issues in all aspects of commercial and residential project design, including crime prevention through environmental design.

Fire Protection Services.

Goal 4.I: To protect residents of, and visitors to, Placer County from injury and loss of life and to protect property and watershed resources from fires.

- 4.I.1. The County will encourage local fire protection agencies in Placer County to maintain the following minimum fire protection standards (expressed as ISO ratings):

  a) ISO 4 in urban areas
  b) ISO 6 in suburban areas
  c) ISO 8 in rural areas

- 4.I.2. The County will encourage local fire protection agencies in the County to maintain the following standards (expressed as average response times to emergency calls):

  a) 4 minutes in urban areas
  b) 6 minutes in suburban areas
  c) 10 minutes in rural areas

Sunset Area Plan

Timing and Maintenance of Facilities and Services.

Goal PFS-1: To ensure the timely development of public facilities and the maintenance of specified service levels for these facilities for the Sunset Area.

- Policy PFS-1.4: Infrastructure Construction Coordination. The County supports efforts to provide notification and information about all major infrastructure and construction projects, including transportation projects and new residential subdivisions, to a shared data base so utility providers have the opportunity to coordinate infrastructure deployment with projects.
- Policy PFS-1.5: Maintenance of Quality and Service Levels. The County shall routinely review the condition of public facilities and the status of public services to ensure that they are consistent with established quality standards and service levels.
- Policy PFS-1.6: Urban Facility Standards. The County shall require that new commercial, recreational, office business park, entertainment mixed use, innovation center, campus park and industrial development are planned and developed according to urban facility standards.
- Policy PFS-2.1: Fair Share Funding of Existing Facilities. The County shall require that new development pay its fair share of the cost of all existing facilities it uses based on the demand for these facilities attributable to the new development; exceptions may be made when new development generates significant public benefits (e.g., a large percentage of a project's workforce is paid at primary wage earner levels of income), and when alternative sources of funding have been identified to offset foregone revenues.
- Policy PFS-2-2: Funding Upgraded or New Facilities. The County shall require that new development pay the cost of upgrading existing public facilities or construct new facilities that are needed to serve the new development; exceptions may be made when new development generates significant public

benefits (e.g., a large percentage of a project's workforce is paid at primary wage earner levels of income) and when alternative sources of funding have been identified to offset foregone revenues.

Law Enforcement/Crime Prevention.

Goal PFS-7: To provide adequate crime prevention and law enforcement services to deter crime and to meet the growing demand for services associated with increasing development in the Sunset Area.

- Policy PFS-7.1: Sheriff Facilities Standards. Within the County's overall budgetary constraints, the County shall provide sheriff facilities (including substation space, patrol, and other vehicles, necessary equipment, and support personnel) sufficient to maintain adopted service standards.
- Policy PFS-7.2: Sheriff Facilities Funding. The County shall require new development to construct or fund sheriff facilities that, at a minimum, maintain adopted standards.
- Policy PFS-7.3: Crime Prevention Through Environmental Design. The County shall consider public safety issues in all aspects of commercial, residential, and industrial project design, including crime prevention through environmental design.

Fire Protection/Emergency Response.

Goal PFS-8: To provide fire protection and emergency response capabilities suitable to serve the demands of the Sunset Area.

- Policy PFS-8.1: New Development and Service Level Standards. The County shall require new discretionary development to construct facilities and/or fund fire protection personnel, operations, and maintenance that maintains County fire protection standards.
- Policy PFS-8.5: Placer Fire Services CFD Annexation. The County shall require new developments in the Sunset Area to annex into Placer CFD No. 2012-1 to provide fire protection and emergency response services, as a condition of approval for all discretionary review permits excluding variances, sign permits, and administrative approval permits not accompanied by any other discretionary land development permit approval to provide fire protection and emergency response services.

15.3 Impact Analysis and Mitigation Measures

15.3.1 Thresholds of Significance

The thresholds of significance for assessing impacts come from the California Environmental Quality Act (CEQA) Environmental Checklist. For public services, the CEQA Checklist asks if the project would result in the following:

- Substantial adverse physical impacts associated with the provision of new or physically altered governmental facilities, the construction of which could cause significant environmental impacts, in order to maintain acceptable service ratios, response times or other performance objectives for any of the public services:
  - Fire protection
  - Police protection
  - Schools
  - Parks
  - Other public facilities

15.3.2 Impacts

Elements of the proposed project that may result in an increased demand for public services include continued and expanded operation of the various solid waste management activities at the WPWMA facility, commensurate with the projected population growth within the WPWMA's service area, plus supporting elements. In addition to solid waste management activities, complementary and programmatic elements may be developed on the WPWMA's properties. Complementary and programmatic elements may include the development of compatible technologies, pilot study areas, university research areas, and a landfill gas-to-compressed natural gas, hydrogen, or other renewable fuels area. The potential for these activities to result in increased demand for public services and a corresponding environmental impact is described for the various public services in the sections that follow.

IMPACT 15-1	**Require New or Expanded Fire Protection Facilities**. The proposed project would be expected to increase demand for fire protection services. However, the WPWMA has a funding mechanism in place with Placer County to address additional fire protection services, and the Sunset Area Plan (SAP) Environmental Impact Report (EIR) includes the provision for new or expanded fire protection facilities; therefore, there would be **no impact** as a result of proposed project implementation.

Plan Concept 1

Solid waste management activities at the WPWMA facility would continue and expand under Plan Concept 1, resulting in the ongoing potential for fire hazards from those activities and the potential for an incremental increase in the need for fire protection as a result of expanded operation. As described in Section 15.2.1, the WPWMA's solid waste management activities assume the potential for fires to occur, and procedures are in place to reduce fire potential and fight fires onsite. However, because the WPWMA regularly uses the emergency response services of Placer County Fire Station 77, the WPWMA pays its fair share for these services. Annual payments to Placer County for fire protection services are adjusted according to changes in the California Consumer Price Index, the same methodology identified in CFD 2012-1.

Because a mechanism is in place that provides funding for fire protection services commensurate with demand, consistent with Placer County Policy PFS-8.1, implementation of Plan Concept 1 would not be expected to reduce fire protection service ratios or response times. Proposed solid waste operations would not differ substantially from current operations in regard to fire protection demands. Although solid waste operations would be expanded, it could be anticipated that the partial transition from the current windrow composting process to ASP technology, as described in Section 3.5.2.2, may result in a reduced risk of fire as a result of the reduction in pile size to less than 12 feet (BioCycle 2004), which could offset the nominal increase from the expansion of other operations. Overall, Plan Concept 1 would not be expected to require the provision of new or physically altered fire protection facilities, and the WPWMA would continue to pay its fair share for fire protection services. Therefore, the expanded solid waste management activities would result in no impact on the need for new or physically altered fire protection facilities.

In addition to solid waste management activities, complementary and programmatic elements may be developed on the WPWMA's properties. Under the project level, for Plan Concept 1, up to 300,000 square feet of building plus exterior infrastructure are reserved in the northern part of the western property for the complementary solid waste management elements. Under the programmatic level, for Plan Concept 1, up to 1.9 million square feet have been reserved for these elements primarily within the northern and southern extents of the western property, and on the center property. However, opportunities may arise

that would support locating some of these complementary and programmatic elements nearer to the solid waste project elements or within areas not yet developed with solid waste project elements.

The development of the project-level complementary elements would result in an increased need for fire protection at the project site. The SAP EIR determined that development within the SAP would increase the demand for fire personnel at Station 77 to maintain County service levels; however, it concluded that this new facility would not result in "unmitigable, adverse effects on the environment" (Placer County 2018). Therefore, although the proposed complementary elements may result in the need for new or physically altered governmental facilities, this new or expanded facility has already been evaluated and would not result in substantial adverse physical impacts or significant environmental impacts. The proposed project-level complementary elements would, therefore, result in no impact.

Buildout of the programmatic elements involves the same increased need for fire protection identified for the project level. Development of the additional programmatic elements (1.6 million square feet) may also result in the need for new or physically altered governmental facilities, which has already been evaluated in the SAP EIR. Therefore, development of the program level of complementary and programmatic elements would result in no impact.

The SAP EIR also concluded that future development within the SAP boundaries would serve as an ongoing revenue source to maintain fire protection and emergency response services and that SAP Policy PFS-8.1 would require new discretionary development to construct facilities or to sufficiently fund fire protection personnel, operations, and maintenance to maintain County fire protection standards (County of Placer 2018). It is therefore assumed that the WPWMA would need to continue to pay its fair share for the proposed complementary and programmatic elements and their contribution to the need for expansion of Station 77 or a new fire station. This is consistent with the current agreement and would therefore result in no impact.

Plan Concept 2

As described in Chapter 3, Project Description, the primary differences between Plan Concept 1 and Plan Concept 2 are related to where various facilities would be located on the WPWMA's property and when various facilities would be developed. These differences do not change the conclusions identified for Plan Concept 1. As such, impacts related to increased demands on fire protection services as a result of implementing Plan Concept 2 would be the same as described for Plan Concept 1.

IMPACT 15-2	**Require New or Expanded Law Enforcement Facilities**. The proposed project would be expected to increase demands for law enforcement services. The incremental demand increase as a result of expanded solid waste management operations is not expected to result in the need for additional law enforcement facilities. The development of complementary and programmatic elements will contribute to the need for additional law enforcement facilities, which have been planned under the Placer Vineyards Specific Plan, therefore resulting in **no impact.**

Plan Concept 1

Site security is provided by the WPWMA, including controlled access and security lighting. Plan Concept 1 would not interfere with existing or planned emergency response plans nor diminish the ability of police service personnel to respond to emergencies, because the facility would be serviced and maintained by existing staff.

Under Plan Concept 1, law enforcement at the project site would continue to be provided by the Placer County Sheriff's Office South Placer Substation, located in the Town of Loomis, approximately 8 miles east of the project site. Under normal traffic conditions, law enforcement would take approximately 17 minutes to drive from the substation to the project site, which is 2 minutes over the Placer County General Plan established average response time in rural areas of 15 minutes. However, because of the infrequent nature of emergencies requiring law enforcement support that have occurred historically at the project site and are expected to occur in the future under Plan Concept 1, the demand for such public service is not anticipated to increase to such an extent that the County Sheriff's average response time throughout the year would fail to meet the response time standard. An additional Placer County Sheriff's Office would not likely be required to provide law enforcement services to the project site for the expanded solid waste management activities, resulting in no impact.

In addition to solid waste management activities, complementary and programmatic elements may be developed on the WPWMA properties. Under the project level, for Plan Concept 1, up to 300,000 square feet of building plus exterior infrastructure are reserved in the northern part of the western property for the complementary solid waste management elements. Under the programmatic level, for Plan Concept 1, up to 1.9 million square feet have been reserved for these elements primarily within the northern and southern extents of the western property, and on the center property. However, opportunities may arise that would support locating some of these complementary and programmatic elements nearer to the solid waste project elements or within areas not yet developed with solid waste project elements.

The development of the project-level complementary elements would be anticipated to result in an increased need for law enforcement protection at the project site, and the SAP EIR indicated that additional officers would be needed to meet an increase in demand for law enforcement services associated with nonresidential uses proposed in the SAP area. However, the SAP EIR also concluded that a new substation to service the project area has been planned under the Placer Vineyards Specific Plan, the first phase of which was approved in 2017 (Placer County 2021). This substation will be designed to accommodate the additional officers required for full buildout of the SAP EIR. Therefore, it can be assumed that the proposed project-level complementary elements would not require the provision of new or physically altered governmental facilities, the construction of which could cause significant environmental impacts, resulting in no impact.

Buildout of the programmatic elements involve the same increased need for law enforcement protection identified for the project level. Development of the additional programmatic elements (1.6 million square feet) may also result in the need for law enforcement protection, which has already been evaluated in the SAP EIR. Therefore, development of the program level of complementary and programmatic elements would result in no impact.

Overall, implementation of Plan Concept 1 would result in no impact to law enforcement facilities.

Plan Concept 2

As described in Chapter 3, Project Description, the primary differences between Plan Concept 1 and Plan Concept 2 are related to where various facilities would be located on the WPWMA's property and when various facilities would be developed. These differences do not change the conclusions identified for Plan Concept 1. As such, impacts related to increased demands on law enforcement services as a result of implementing Plan Concept 2 would be the same as described for Plan Concept 1.

IMPACT 15-3	**Require New or Expanded Schools and Parks**. The proposed project would not be expected to increase demands for schools and parks to such an extent that new or expanded schools and parks would be required beyond what has been accounted for in the SAP EIR. The impact of increased demand on schools and parks from implementation of the proposed project would be **less than significant**.

Plan Concept 1

Solid waste management activities at the WPWMA facility would continue and expand under Plan Concept 1; however, these operations would not result in the need for new schools or parks, because the project does not involve residential uses or induce population growth. Additional staffing required as a result of the proposed project is anticipated to be accommodated by existing residents or population growth planned by the regional jurisdictions. In addition to solid waste management activities, complementary and programmatic elements may be developed on the WPWMA's properties. Under the project level, for Plan Concept 1, up to 300,000 square feet of building plus exterior infrastructure are reserved in the northern part of the western property for the complementary solid waste management elements. Under the programmatic level, for Plan Concept 1, up to 1.6 million square feet have been reserved for these elements primarily within the northern and southern extents of the western property, and on the center property. However, opportunities may arise that would support locating some of these complementary and programmatic elements nearer to the solid waste project elements or within areas not yet developed with solid waste project elements.

The proposed complementary and programmatic elements would result in new employment opportunities in the project area, which would increase demand on local schools and parks. The SAP EIR concluded that full buildout of the SAP would result in 40,804 new jobs within the SAP area (Placer County 2019). Although the expected number of jobs per acre per land use type was not included in the evaluation, averaging the total number of jobs across all commercial land use types included in the SAP (in other words, excluding the reserve land use acreage), results in approximately 11.25 jobs per acre.

Using the average of 11.25 jobs per acre, the development of the project-level complementary elements could result in up to 78 new jobs. Assuming an average Placer County household size of 2.67, these 78 new jobs could result in up to 208 new residents in the project area. Although some of the people seeking these new employment opportunities may live outside the project area, for the purposes of this analysis, it is conservatively assumed all would reside within Placer County. Up to 46 of these new residents could be school-aged children, based on an average 22.1 percent of the population being under 18 years of age (Census 2019), who are among the demographic most likely to use public parks. In accordance with the General Plan, and as discussed in the SAP EIR, 5 acres of active parks, 5 acres of passive recreation and open space or paseos, and 1 mile of trails are required per each 1,000 residents. Using these requirements, the SAP EIR concluded that there is sufficient space within the Sunset Area to accommodate new and expanded schools and parks for the full buildout of the SAP and PRSP, and that environmental impacts associated with the construction of these new and expanded facilities would be less than significant. Therefore, the impacts associated with the provision of new or physically altered schools and parks associated with the proposed project-level complementary elements would also be less than significant.

Buildout of the programmatic elements is assumed to involve the same increase in jobs per acre described for the project-level elements. Development of the additional programmatic elements (1.6 million square feet) may therefore result in up to 414 new jobs, which could result in an increase of up to 1,104 residents and 244 school-aged children in the area, using the same household size and percentage of the

population under 18 noted previously (Census 2019). This population increase would exceed the 1,000-resident threshold requiring 5 acres of active parks, 5 acres of passive recreation and open space or paseos, and 1 mile of trails. However, the SAP EIR concluded that there is sufficient space within the Sunset Area to accommodate new and expanded schools and parks for full a buildout of the SAP and PRSP, and that environmental impacts associated with the construction of these new and expanded facilities would be less than significant. Therefore, the impacts associated with the provision of new or physically altered schools and parks associated with the proposed programmatic elements would also be less than significant.

Overall, Plan Concept 1 impacts related to schools and parks would be less than significant.

Plan Concept 2

As described in Chapter 3, Project Description, the primary differences between Plan Concept 1 and Plan Concept 2 are related to where various facilities would be located on the WPWMA's property and when various facilities would be developed. These differences do not change the conclusions identified for Plan Concept 1. As such, impacts related to increased demands on schools and parks as a result of implementing Plan Concept 2 would be the same as described for Plan Concept 1.

IMPACT 15-4	**Require New or Expanded Roadway Maintenance**. Although the proposed project would not require new roadways, it would be expected to increase the need for maintenance of local roadways. The WPWMA has a mechanism in place with Placer County to provide funding for road maintenance and improvements on Athens Avenue that would remain in place for the proposed project. This impact is **less than significant**.

Plan Concept 1

Solid waste management activities at the WPWMA facility would continue and expand under Plan Concept 1, which would result in an increased use of local roadways and a corresponding need for increased road maintenance. However, as described in Section 15.2.4, the WPWMA has a mechanism in place with the Placer County Department of Public Works to provide proper road maintenance and improvements on Athens Avenue. That mechanism would remain in place under Plan Concept 1; however, it could be reasonably expected that the agreement may need to be modified to include Fiddyment Road should traffic levels on Fiddyment Road substantially increase.

In addition to solid waste management activities, complementary and programmatic elements may be developed on the WPWMA's properties. Under the project level, for Plan Concept 1, up to 300,000 square feet of building plus exterior infrastructure are reserved in the northern part of the western property for the complementary solid waste management elements. Under the programmatic level, for Plan Concept 1, up to 1.9 million square feet have been reserved for these elements primarily within the northern and southern extents of the western property, and on the center property. However, opportunities may arise that would support locating some of these complementary and programmatic elements nearer to the solid waste project elements or within areas not yet developed with solid waste project elements.

The development of these complementary project-level elements and buildout of the programmatic elements would be anticipated to result in increased use of Fiddyment Road and a corresponding need for roadway maintenance. The SAP EIR concluded that the increased use of County roads could result in an increase in the frequency of maintenance needed for these facilities and identifies Placer County General Plan Policies 4.B.1 and 4.B.2 and SAP Policies PFS-2.1 and PFS-2.2, all of which require new developments

to pay a fair share of funding for maintenance of public roads. By continuing the existing funding mechanism the WPWMA has in place with the Placer County Department of Public Works to provide proper road maintenance on Athens Avenue, Plan Concept 1 would be consistent with these policies. This impact is less than significant.

Plan Concept 2

As described in Chapter 3, Project Description, the primary differences between Plan Concept 1 and Plan Concept 2 are related to where various facilities would be located on the WPWMA's property and when various facilities would be developed. These differences do not change the conclusions identified for Plan Concept 1. As such, impacts related to increased demands for roadway maintenance as a result of implementation of Plan Concept 2 would be the same as described for Plan Concept 1.

15.4 References

BioCycle. 2004. *Fire Prevention at Composting, Mulch Facilities*. December 16. Accessed June 22, 2021. https://www.biocycle.net/fire-prevention-at-composting-mulch-facilities/.

California Department of Resources Recycling and Recovery (CalRecycle). 2021. *Landfill Fires Guidance Document*. Accessed June 22, 2021. https://www.calrecycle.ca.gov/swfacilities/fires/lffiresguide.

California Office of Environmental Services (Cal OES). 2014. *California Hazardous Materials Spill/Release Notification Guidance*. February.

City of Lincoln. 2014. *Parks Facilities & Schools*.

City of Rocklin. 2021. *Parks*. Accessed October 30, 2020. https://www.rocklin.ca.us/parks.

City of Roseville. 2020. *Parks & Places*. Accessed October 26, 2020. https://www.roseville.ca.us/government/departments/parks/parks_places.

Ed-Data. 2020. *Placer County*. Accessed October 26, 2020. http://www.ed-data.org/county/Placer.

Nortech Systems (Nortech). 2020. Nortech Incident Response System NIRS 2020.

Placer County. 2019a. *Placer Ranch Specific Plan*. December 10.

Placer County. 2019b. *Sunset Area Plan/Placer Ranch Specific Plan Final Environmental Impact Report*. State Clearinghouse #2016112012. October. With technical assistance by Ascent Environmental, Sacramento, CA.

Placer County. 2020a. *Placer County Fire Departmen*t. Accessed October 23, 2020. https://www.placer.ca.gov/1525/Fire-Department.

Placer County. 2020b. *Stations*. Accessed October 26, 2020. https://www.placer.ca.gov/3333/Stations.

Placer County. 2020c. *Sheriff's Office*. Accessed October 23, 2020. https://www.placer.ca.gov/2013/Contact-Us.

Placer County. 2020d. *Sacramento State Placer Center takes step closer to reality in south Placer County*. Accessed October 26, 2020. https://www.placer.ca.gov/6680/Sacramento-State-Placer-Center.

Placer County. 2020e. *Parks*. Accessed October 26, 2020. https://www.placer.ca.gov/5711/Parks.

Placer County. 2021. *Placer Vineyards*. Accessed June 22, 2021. https://www.placer.ca.gov/3563/Placer-Vineyards.

United States Census Bureau (Census). 2019. *QuickFacts: Placer County, California*. Access June 22, 2021. https://www.census.gov/quickfacts/placercountycalifornia.

Verisk Analytics, Inc. (Verisk). 2021. "How does ISO evaluate local fire protection?" *Public Protection Classification (PPC): Frequently Asked Questions.* Accessed July 7, 2021. https://www.verisk.com/insurance/about/faq/the-public-protection-classification-ppc-program/.

Waste 360. 2019. *Waste, Recycling Facility Fires Up 26% in 2018 Compared to 2017*. January 3. https://www.waste360.com/safety/waste-recycling-facility-fires-26-2018-compared-2017.

Waste 360. 2021. *4th Annual Reported Waste & Recycling Facility Fires in the US/Canada Released*. March 11. https://www.waste360.com/waste/4th-annual-reported-waste-recycling-facility-fires-uscanada-released.

Western Placer Waste Management Authority (WPWMA). 2016. *WPWMA Transfer Processing Report*.

WPWMA. 2020. *WPWMA Organics Permitting Assistance Fire Prevention Plan*. October. With technical assistance by Jacobs, Sacramento, CA.

16. Transportation

This chapter describes the existing transportation setting in the project study area and evaluates the potential impacts to transportation and circulation from implementation of Plan Concept 1 and Plan Concept 2 of the Renewable Placer: Waste Action Plan.

16.1 Environmental Setting

The Western Placer Waste Management Authority (WPWMA) facility is located in Placer County between the cities of Roseville and Lincoln, generally at the intersection of Athens Avenue and Fiddyment Road (Figure 16-1). Currently, the WPWMA facility receives waste and recyclable materials from a majority of the geographical area and population of Placer County. The site is mostly surrounded by rural agricultural lands, with existing industrial uses located directly to the northeast.

16.1.1 Transportation Study Area

The transportation study area for the WPWMA facility focuses on project access roadways to the facility within Placer County. Existing access to the solid waste facilities is provided from Athens Avenue. The roadways included within the study area are described in the following section.

16.1.2 Regional and Local Road Network

The regional and local road network is composed of arterial roadways and State Route (SR)-65 (Figure 16-1). The primary roadways that serve the project site include the following:

- SR-65: North-south state highway located to the east of the project site. SR-65 is a four-lane highway near the project site, with primary site vehicle access points at Industrial Avenue and Sunset Boulevard.
- Athens Avenue: East-west arterial roadway that connects Industrial Avenue to Fiddyment Road. Athens Avenue is a two-lane road except at the eastern end near Industrial Avenue. The primary existing entrance to the project site is located on the southern side of Athens Avenue directly east of the Athens Avenue and Fiddyment Road intersection.
- Fiddyment Road: North-south arterial roadway bisecting the western portion of the project site. Fiddyment Road is a two-lane road near the project site.
- Industrial Avenue: North-south arterial roadway to the east of the project site that is parallel to, and west of, SR-65. Industrial Avenue generally consists of two lanes near the project site.
- Sunset Boulevard West: Bisected east-west arterial roadway, a portion of which borders the southern boundary of the project site. Sunset Boulevard West includes two separated segments, including one segment that extends west from its terminus at Fiddyment Road, and a second segment that extends east from its connection with North Foothills Boulevard. The western segment is a two-lane road, and the eastern segment is two lanes that extend east from its connection with North Foothills Boulevard before transitioning to a divided roadway with three lanes in each direction as the segment crosses over SR-65.
- North Foothills Boulevard: North-south arterial roadway to the east of the project site. North Foothills Boulevard is a two-lane road that connects Athens Avenue with Sunset Boulevard West.

16.1.3 Existing Roadway Daily Traffic

Table 16-1 summarizes the project access roadways, along with the existing number of lanes, existing roadway capacity, and average daily traffic (ADT) in baseline year 2018. Year 2018 ADT is based on existing traffic volumes included in the 2018 Sunset Area Plan/Placer Ranch Specific Plan (SAP/PRSP) Transportation Impact Study. The existing volumes published in the study are for year 2015. To estimate year 2018 volumes, a growth rate was applied to the year 2015 traffic volumes. The growth rate was developed by using the year 2015 traffic volumes and forecasted year 2036 traffic volumes from the same study. As shown in Table 16-1, year 2018 ADT along the project access roadways ranges from 4,409 vehicles per day to 12,352 vehicles per day, which falls within the existing capacities of the access roadways.

Table 16-1. Existing Roadways and Roadway Characteristics

#	Segment Location	Existing Number of Lanes	Existing Daily Capacity	Year 2018 ADT
1	Fiddyment Road: Project Northerly Boundary to Athens Avenue	2	18,000	4,035
2	Fiddyment Road: Athens Avenue to Sunset Boulevard West	2	18,000	7,919
3	Athens Avenue: Fiddyment Road to Foothill Boulevard North	2	18,000	7,058
4	Athens Avenue: Foothill Boulevard North to Industrial Avenue	2	18,000	12,352
5	Foothill Boulevard North: Athens Avenue to Sunset Boulevard West	2	18,000	4,829
6	Sunset Boulevard West: Foothill Boulevard North to Industrial Avenue	2	18,000	4,409
7	Industrial Avenue: Athens Avenue to Sunset Boulevard West	2	18,000	11,706
8	Industrial Avenue: Sunset Boulevard West to Roseville City Limits	2	18,000	9,562

16.1.4 Existing Regional Vehicle Miles Traveled

Existing (year 2018) regional vehicle miles traveled (VMT) was estimated for South Placer County, which is defined as the cities of Lincoln, Rocklin, Roseville, and Loomis as well as unincorporated county areas west of Folsom Lake and Newcastle, south of Bear River, and east of Sutter County. The South Placer County VMT estimate for year 2018 is based on outputs from the SACOG SACMET travel forecasting model as well as the Placer County travel forecasting model. Based on the SAP/PRSP Transportation Impact Study (Fehr and Peers 2018), the regional VMT for South Placer County is 9,478,392 vehicle miles for year 2015 and 13,995,676 vehicle miles for year 2036. Year 2018 regional VMT for South Placer County was extrapolated by using these data, resulting in a VMT of 9,935,503 vehicle miles.

16.1.5 Pedestrian and Bicycle Facilities and Public Transit

No transit service, bicycle facilities, or pedestrian facilities are located within the study area.

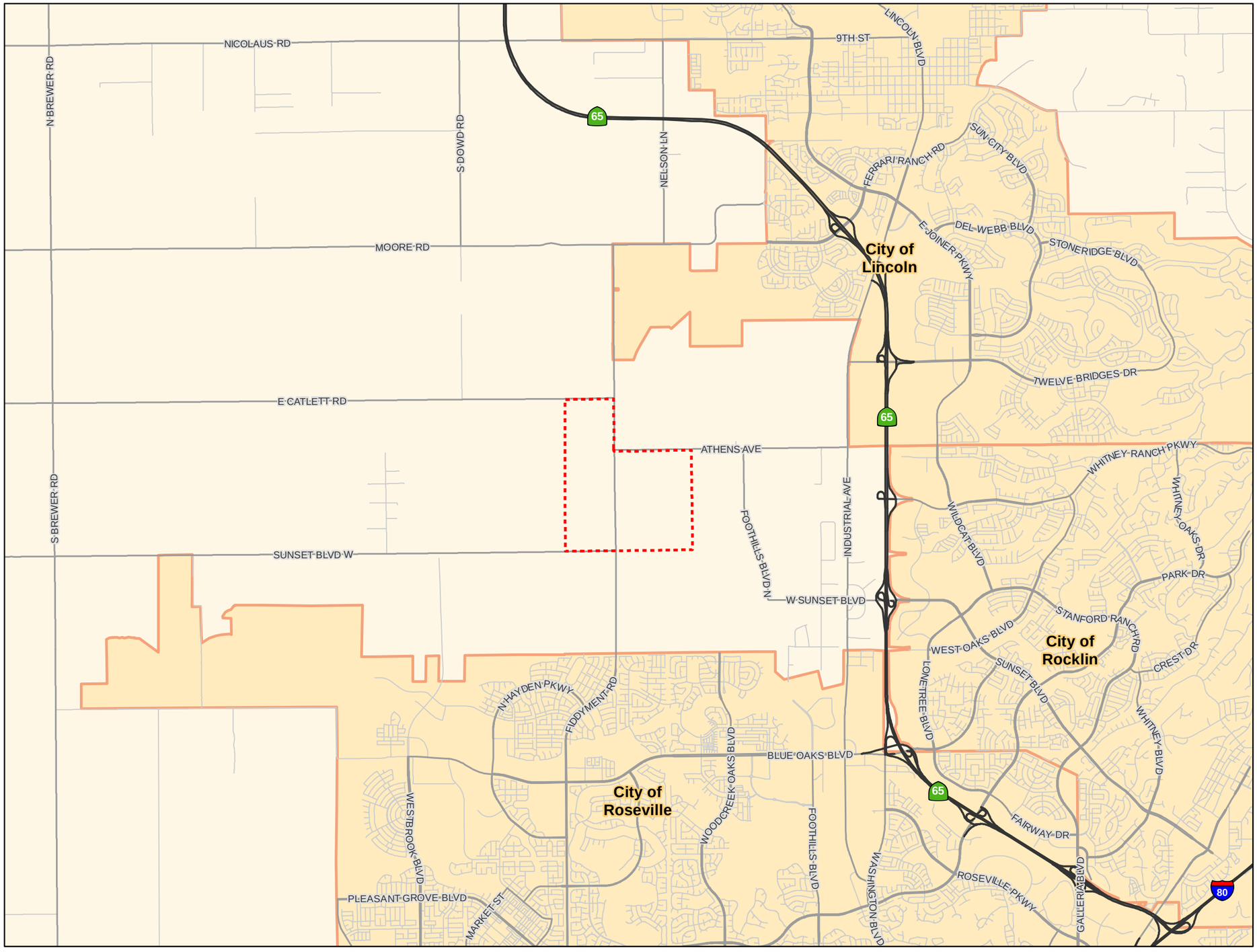

VICINITY MAP

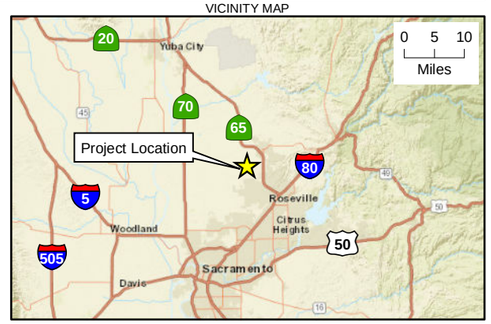

LEGEND

- Proposed Project Area
- City Boundary
- Highway
- Major Road
- Road

N

0 1 2
Miles

Figure 16-1. Regional and Local Road Network
Draft Environmental Impact Report
Renewable Placer: Waste Action Plan
Placer County, California

Jacobs

\\dc1vs01\GISProj\W\WPWMA\Maps\Report\EIR\Transportation\Road_Network_210528.mxd 7/21/2021

16.1.6 Airports

Air facilities located within 10 miles of the project site include the Lincoln Regional Airport (approximately 4 miles north of the site) and James Brothers Airstrip (approximately 10 miles west of the site). The airport with the highest air traffic in the region is the Sacramento International Airport, located approximately 16 miles southwest of the project site.

16.2 Regulatory Setting

16.2.1 Federal

No federal transportation regulations are applicable to the proposed project.

16.2.2 State

California Department of Transportation

The California Department of Transportation (Caltrans) is responsible for planning, designing, constructing, operating, and maintaining all state-owned roadways. The proposed project is located within Caltrans District 3, which has ongoing planned improvements to SR-65. SR-65 is planned for widening on the segment southeast of the site, between Blue Oaks Boulevard and Galleria Boulevard. Additionally, there is a plan to add auxiliary lanes from Lincoln Boulevard to Blue Oaks Boulevard (Placer County Transportation Planning Agency 2019).

Senate Bill 743

Senate Bill (SB) 743 (passed in 2013) sets forth requirements for the Governor's Office of Planning and Research (OPR) to evaluate new metrics for transportation impact analysis under the California Environmental Quality Act (CEQA). Subsequent CEQA Guidelines (§ 15064.3, subdivision (b)) (approved in 2018 with statewide implementation on July 1, 2020) state that VMT should be the appropriate environmental impact metric under CEQA, replacing previous Level of Service (LOS) criteria. Thus, although Caltrans and Placer County reports may refer to LOS thresholds, the analysis in this Environmental Impact Report (EIR) focuses on VMT per recent CEQA Guidelines.

16.2.3 Local

The WPWMA is a Joint Powers Authority (JPA) composed of Placer County and the cities of Lincoln, Rocklin, and Roseville to own and operate a regional recycling facility and sanitary landfill. As a JPA, the WPWMA considers local regulations and consults with local agencies, but County and city regulations are not applicable, because the County and cities do not have jurisdiction over the proposed project. Accordingly, the following discussion of local goals and policies associated with transportation is provided for informational purposes only.

Placer County General Plan

The Transportation and Circulation section of the *Placer County General Plan* (Placer County 2013) provides long-range planning and policy context to achieve safe and efficient circulation of people, vehicles, and goods throughout the County. The section establishes goals and policies for the circulation system to balance the varying needs of the transportation network users. An applicable goal and two supporting policies are as follows:

- Goal 3.A: To provide for the long-range planning and development of the County's roadway system to ensure the safe and efficient movement of people and goods.
  - Policy 3.A.1 The County shall plan, design, and regulate roadways in accordance with the functional classification system described in the Part I (Land Use/Circulation Diagrams and Standards) of the Policy Document and reflected in the Circulation Plan Diagram.
  - Policy 3.A.2 Streets and roads shall be dedicated, widened, and constructed according to the roadway design and access standards generally defined in Section I (Land Use) of the Policy Document and, more specifically, in community plans, specific plans, and the County's Highway Deficiencies Report (SCR 93). Exceptions to these standards may be considered due to environmental, geographical, historical, or other similar limiting factors. An exception may be permitted only upon determination by the Public Works Director that safe and adequate public access and circulation are preserved.

County of Placer Transportation Study Guidelines.

The *County of Placer Transportation Study Guidelines* (Placer County 2020) recognizes changes to transportation analysis metrics as a result of SB 743 and revised CEQA Guidelines. This study provides guidelines for transportation analysis in the region, including screening criteria, significance thresholds, and analysis methodology.

Placer County Regional Bikeway Plan.

The *Placer County Regional Bikeway Plan* (Kittelson & Associates 2018) was updated in 2018 and proposes a network of bike paths and accommodations for the region. Buffered bike lanes are proposed along Athens Avenue, Fiddyment Road, and Sunset Boulevard.

Sunset Area Plan

The SAP (Placer County 2019) includes goals and policies to improve the transportation environment near the proposed project. These include the following:

- Goal TM-1: Roadways and Traffic. To develop a balanced, multimodal transportation network that meets the needs of all users of streets, roads, and highways for safe and convenient travel.
  - Policy TM-1.1: Complete Street Design. The County shall require, as conditions of approval, the design of all arterial, collector, and local streets in the Sunset Area to address the needs of all potential users and all modes of travel within the street right-of-way.
  - Policy TM-1.4: Vehicle Miles Traveled. Consistent with SB 743, the County shall use vehicle miles traveled (VMT) to evaluate the transportation impacts of new development proposals, in accordance with the adoption timelines defined in SB 743.

16.3 Impact Analysis and Mitigation Measures

16.3.1 Thresholds of Significance

The significance thresholds used to evaluate the project's transportation impacts are based on the example criteria outlined in Appendix G of the CEQA Guidelines. The significance thresholds also consider the applicable goals and policies in the County of Placer General Plan, the County of Placer Transportation Study Guidelines (Placer County 2020), criteria used in the 2019 Final Environmental Impact Report

(FEIR) SAP/PRSP (Ascent 2019), and professional judgment. Accordingly, a significant transportation impact would occur if a project does the following:

Conflicts with a program, plan, ordinance, or policy addressing the circulation system, including transit, roadway, bicycle, and pedestrian facilities.

- Roadways
  - Additional lanes beyond the planned number of lanes are required to accommodate for the additional traffic from the project site.
- Transit System and Bicycle or Pedestrian System
  - Interfere with existing or planned public transit services and bicycle or pedestrian facilities.

Conflicts or is inconsistent with CEQA Guidelines Section 15064.3, Subdivision (b).

- An increase of more than 110 vehicle trips per day or a VMT increase of more than 880 vehicle miles on a typical day.

Substantially increases hazards as a result of a geometric design feature (for example, sharp curves or dangerous intersections) or incompatible uses (such as farm equipment).

- Access design does not accommodate for both cars and trucks.
- Access design does not adhere to applicable roadway and driveway access design requirements.
- Construction activities introduce geometric design hazards on the roadways.

Has inadequate emergency access.

- Access is insufficient to accommodate emergency vehicles at the site.
- Access does not comply with state and local fire safe standards and applicable regulations for emergency vehicle access to the project site.
- Construction activities would substantially interrupt emergency vehicle operation.

16.3.2 Analysis Methodology

The WPWMA identifies two separate plan concepts for the expansion of the facility: Plan Concept 1 and Plan Concept 2. Plan Concept 1 and Plan Concept 2 contain similar elements, but the locations and characteristics of the elements vary between the two concepts. In response to the increasing population in the communities that the facility serves, both plan concepts increase the material tonnage received from the existing (year 2018) tonnage of 483,968 tons of solid waste material to 912,200 tons of solid waste material by 2050. Both plan concepts consist of solid waste elements, supporting elements, and complementary and programmatic elements. For the complementary and programmatic elements, up to 300,000 square feet of building infrastructure are reserved in the northern portion of the western property under the project level. Under the programmatic level, up to 1.9 million square feet have been reserved for these elements primarily within the northern and southern extents of the western property, and on the center property.

For this transportation analysis, since the two plan concepts include the same elements and solid waste material tonnage, the analysis that follows applies to both plan concepts. This chapter provides analysis for all the elements, including both the project- and program-level discussion for the complementary and programmatic elements. Information and analysis presented in this section is based on review of the 2019 FEIR SAP/PRSP and 2018 SAP/PRSP Transportation Impact Study.

VMT Assessment

Pursuant to SB 743, the focus in evaluating transportation impacts under CEQA has shifted from traffic delay (LOS) to total VMT. The intent of SB 743 is to better align transportation impact analysis under CEQA with the state's long-term climate goal of reducing greenhouse gas emissions. The requirements from SB 743 are implemented in CEQA Guidelines 15064.3(b). OPR provides a Technical Advisory on Evaluating Transportation Impacts in CEQA (OPR 2018) that contains technical recommendations regarding the assessment of VMT, thresholds of significance, and mitigation measures for different types of transportation projects.

The approaches, tools, and significance threshold for evaluating VMT are still developing, and the technical guidance from the state and Placer County is not definitive for solid waste management projects. Section 15064.3 explains that a "lead agency has discretion to choose the most appropriate methodology to evaluate a project's [VMT], including whether to express the change in absolute terms, per capita, per household or in any other measure. A lead agency may use models to estimate a project's [VMT]." CEQA generally defers to lead agencies on the choice of methodology to analyze impacts. (*Santa Monica Baykeeper v. City of Malibu* (2011) 193 Cal.App.4th 1538, 1546; see *Laurel Heights Improvement Assn. v. Regents of University of California* (1988) 47 Cal.3d 376, 409 ["the issue is not whether the studies are irrefutable or whether they could have been better" … rather, the "relevant issue is only whether the studies are sufficiently credible to be considered" as part of the lead agency's overall evaluation]) (OPR 2018).

Section 15064.3(a), states, "For the purposes of this section, 'vehicle miles traveled' refers to the amount and distance of automobile travel attributable to a project." Here, the term "automobile" refers to on-road passenger vehicles, specifically cars and light trucks. Heavy-duty truck VMT could be included for modeling convenience and ease of calculation (for example, where models or data provide combined auto and heavy truck VMT) (OPR 2018), but their inclusion is not required. For purposes of the VMT impact evaluation in this section, the assessment conservatively includes heavy truck VMT for informational purposes.

The methodology used for this study includes comparing the total project VMT to the total regional VMT for South Placer County. This VMT assessment is conducted based on total VMT rather than VMT per capita, because of the nature of the proposed project. An assessment of VMT per capita would not be applicable to this project because it does not result in an increase in population. The purpose of the proposed project is to serve the existing and projected population of the area.

The comparison of project VMT to regional VMT is intended to provide context to decision makers and the public regarding the scale of the proposed project's VMT generation in relation to regional vehicle travel. However, this comparison was not used to establish a significance threshold nor to justify a less-than-significant impact conclusion. The impact analysis used a very conservative VMT significance threshold based on total VMT generation.

16.3.3 Impact Analysis and Mitigation Measures

This section describes the transportation effects associated with the two plan concepts, mitigation measures for identified significant impacts, and the level of impact significance following implementation of the identified mitigations.

IMPACT 16-1	**Conflict with Traffic Circulation Plan or Program**. The proposed project would increase traffic volumes on study roadway segments in Placer County. However, this increase in traffic volumes would not exceed the capacities of the affected roadways. Also, the proposed project does not include any changes to the roadway network that would affect alternative modes of transportation. Therefore, the proposed project would not conflict with any program, plan, ordinance, or policy addressing the circulation system. Impacts would be **less than significant**.

Plan Concept 1

Operation.

Although policies in the Placer County General Plan identify LOS criteria for roadway segments, according to SB-743 and subsequent CEQA Guidelines (§ 15064.3(b)), these policies are no longer considered in making CEQA significance determinations. However, to determine whether the project would result in any conflicts with roadway improvements identified in Placer County's Circulation Plan and program or the SAP development, the project's projected ADT volumes have been compared with the identified roadway capacities.

The roadway capacity is based on the daily traffic volume thresholds in the *Placer Countywide General Plan EIR. Transportation and Circulation (1994)*. Table 16-2 presents these daily traffic volume roadway segment capacity thresholds.

Table 16-2. Placer County Roadway Segment Capacity Thresholds

Roadway Type	Daily Two-Way Volume Thresholds				
	LOS A	LOS B	LOS C	LOS D	LOS E
4-Lane Expressway	25,200	42,480	54,720	66,960	72,000
4-Lane Arterial – High Access Control	24,000	28,000	32,000	36,000	40,000
6-Lane Arterial – High Access Control	36,000	42,000	48,000	54,000	60,000
8-Lane Arterial – High Access Control	48,000	56,000	64,000	72,000	80,000
2-Lane Arterial – Moderate Access Control	10,800	12,600	14,400	16,200	18,000
4-Lane Arterial – Moderate Access Control	21,600	25,200	28,800	32,400	36,000
6-Lane Arterial – Moderate Access Control	31,400	37,800	43,200	48,600	54,000

Source: *Countywide General Plan Final Environmental Impact Report, Placer County 1994*.

Traffic volumes and VMT used for this impact analysis are based on a combination of year 2018 vehicle data from the current WPWMA facility, the 2019 FEIR SAP/PRSP and 2018 SAP/PRSP Transportation Impact Study, and calculations based on the California Emissions Estimator Model (CalEEMod) software.

The number of vehicles per day from the WPWMA facility consists of vehicles associated with waste recovery, waste disposal, and supporting elements and vehicles associated with the complementary and programmatic elements. The following describes how each was estimated for the proposed project:

- **Waste Recovery and Waste Disposal and Supporting Elements**

  The number of vehicles per day associated with the solid waste and supporting elements for the proposed project was forecasted by using vehicle data in year 2018 from the scale house and employee information for the existing WPWMA facility. According to the year 2018 data, the highest number of vehicles observed was 1,396 vehicles on a weekday and 1,315 vehicles on a weekend day. The number of vehicles during project buildout in year 2050 is forecasted by applying a growth factor of approximately 2 percent per year to the 2018 vehicle data. This growth factor is based on the anticipated population increase in Placer County and tonnage projection from year 2018 to year 2050. The number of projected vehicles per day in year 2050 is 2,541 on weekdays and 2,437 on weekends. For traffic analysis purposes, the focus is on vehicle trips. One vehicle equates to two trips (one inbound and one outbound). The number of vehicles per day is multiplied by two to calculate vehicle trips.

- **Complementary and Programmatic Elements**

  The CalEEMod software is used to estimate the number of vehicles associated with the complementary and programmatic elements of the project. CalEEMod uses trip generation rates from the Institute of Transportation Engineers' *Trip Generation Manual* (ITE 2017). It is assumed that the manufacturing land use trip generation rates would represent the number of vehicles for this element of the project. Vehicle trips for 1.9 million square feet of building for the complementary and programmatic elements (of which 300,000 square feet are evaluated at a project level) are calculated.

Table 16-3 summarizes the number of vehicle trips per day during a weekday and weekend for the existing solid waste operations (2018 baseline conditions) and for the 2050 conditions. The difference in vehicle trips per day identified for 2018 and 2050 represents the vehicle trips associated with the different project components. As shown in Table 16-3, the proposed expansion of the solid waste operations with 300,000 square feet of building space for the complementary elements is anticipated to generate 3,619 vehicle trips per day during a weekday and 2,713 during a weekend. When the 1.9 million square feet of building space associated with the complementary and programmatic elements is combined with the expanded solid waste operations, a total of 9,870 vehicle trips per day during the weekday and 5,289 vehicle trips per day during the weekend would be expected.

Table 16-3. Weekday Number of Vehicle Trips Per Day

Daily Total Number of Vehicles Trips	Weekday			Weekend		
	Year 2018	Year 2050	Proposed Project[a]	Year 2018	Year 2050	Proposed Project[a]
Solid Waste and Supporting Elements	2,791	5,082	2,291	2,629	4,875	2,245
Complementary Elements (300,000 sq ft of building)	--	1,328	1,328	--	468	468
Project Site Total (Solid Waste + Supporting Elements + 300,000 sq ft of Complementary and Programmatic Elements)			**3,619**			**2,713**
Solid Waste and Supporting Elements	2,791	5,082	2,291	2,629	4,875	2,245
Complementary and Programmatic Elements (1.9 million sq ft of building)	--	7,579	7,579	--	3,044	3,044
Project Site Total (Solid Waste + Supporting Elements + 1.9 million sq ft of Complementary and Programmatic Elements)			**9,870**			**5,289**

[a] The difference between vehicle trips per day for year 2018 and year 2050 is the vehicle trips associated with the expansion of the WPWMA facility (column highlighted in gray).

Notes:

-- = not applicable

sq ft = square foot (feet)

Table 16-4 summarizes the project access roadways, along with the existing number of lanes, existing roadway capacity, and weekday existing year 2018 ADT with and without the project. Since project vehicle traffic is higher during the weekday compared with the weekend, the analysis is conducted for weekday only to represent a worse-case scenario. Project trips have been added to the project access roadways based on WPWMA service location data. As shown in Table 16-3, with the additional project trips, the volumes on the project access roadways are within existing roadway capacities.

Table 16-4. Project Access Roadways and Roadway Characteristics

#	Segment Location	Existing Number of Lanes	Existing Capacity	Year 2018 ADT[a]	Year 2018 + Project[b] ADT	Year 2018 + Project[c] ADT
1	Fiddyment Road: Athens Avenue to Project Northerly Boundary	2	18,000	4,035	4,325	4,825
2	Fiddyment Road: Sunset Boulevard West to Athens Avenue	2	18,000	7,919	8,534	9,597
3	Athens Avenue: Fiddyment Road to Foothill Boulevard North	2	18,000	7,058	9,772	14,461
4	Athens Avenue: Foothill Boulevard North to Industrial Avenue	2	18,000	12,352	12,714	13,339
5	Foothill Boulevard North: Athens Avenue to Sunset Boulevard	2	18,000	4,829	7,181	11,245
6	Sunset Boulevard: Foothill Boulevard North to Industrial Avenue	2	18,000	4,409	6,761	10,825
7	Industrial Avenue: Athens Avenue to Sunset Boulevard	2	18,000	11,706	12,068	12,693
8	Industrial Avenue: Sunset Boulevard to Roseville City Limits	2	18,000	9,562	9,924	10,549

[a] Weekday ADT

[b] Project = Solid waste, supporting, and 300,000 sq ft of building for complementary and programmatic elements

[c] Project = Solid waste, supporting, and 1.9 million sq ft of building for complementary and programmatic elements

No transit service, bicycle facilities, or pedestrian facilities are located within the study area, and the proposed project does not include any changes to the local roadway network. Therefore, project implementation would not be expected to adversely affect existing or planned bicycle, pedestrian, or transit system facilities within the project vicinity.

The project includes a crossing of Fiddyment Road to connect the center and western properties. This crossing would be constructed either under or over Fiddyment Road and would not connect to the local project access roadways. This project feature is not anticipated to conflict or interfere with any existing or planned improvements identified in Placer County's Circulation Plan or the SAP development for Fiddyment Road.

The proposed project would not change the existing or planned circulation system in the project vicinity. Therefore, the proposed project would not conflict or interfere with any program, plan, ordinance, or policy addressing the circulation system, specifically Placer County's Circulation Plan (per goal 3.A. and policy 3.A.1) and proposed improvements and goal TM-1 for the entire SAP development. Therefore, project operational impacts would be less than significant.

Construction.

During construction, there would be a short-term temporary increase in traffic on the project access roadways as a result of the construction of utilities underneath the roadway and the crossing connecting the center and western properties over Fiddyment Road. The increase in traffic caused by construction is

expected to be minimal. Furthermore, the WPWMA would prepare a Construction Transportation Management Plan under Mitigation Measure 11-3, and as discussed in Chapter 11 Hazards, Hazardous Materials and Wildfire, a Construction Traffic Management Plan would be implemented under Mitigation Measure 11-5, both of which could further reduce impacts from project construction on traffic. Since the transportation effects during construction are short term and temporary, construction impacts on the local circulation system and potential conflicts with programs, plans, ordinances, or policies addressing the circulation system, including transit, roadway, bicycle, and pedestrian facilities, would be less than significant.

Plan Concept 2

As described in Chapter 3, Project Description, the primary differences between Plan Concept 1 and Plan Concept 2 are related to where various facilities would be located on the WPWMA's property and when various facilities would be developed. These differences do not change the conclusions identified for Plan Concept 1. As such, impacts as a result of implement Plan Concept 2 would be the same as those described for Plan Concept 1.

IMPACT 16-2	**Increase in Vehicle Miles Traveled**. The implementation of the proposed project would result in new daily vehicle travel, which would result in a net increase in VMT. This increase in VMT would exceed the identified significance threshold and would result in a **significant and unavoidable** transportation impact.

Plan Concept 1

An assessment of VMT has been conducted to compare the VMT for the proposed project with the regional VMT. The project site is located within the boundaries of the SAP/PRSP, and development of the project site was included in the transportation analysis for the SAP/PRSP development. Therefore, this VMT assessment is based on a review of the 2019 FEIR SAP/PRSP and 2018 SAP/PRSP Transportation Impact Study with adjustments based on project-specific information.

VMT for the proposed project was calculated by using the vehicle trips in Table 6-3 and the weighted-average travel distances from WPWMA service location data along with typical travel distances from CalEEMod. Table 16-5 summarizes weekday project VMT for the proposed project elements. Estimated project VMT for the solid waste components, supporting elements, and 300,000 square feet of building space for the complementary elements is 62,591 vehicle miles during a weekday. Estimated project VMT for the solid waste components, supporting elements, and 1.9 million square feet of building space for the complementary and programmatic elements is 116,338 vehicle miles.

Table 16-5. Project Vehicle Miles Traveled

Project Elements	Weekday Daily VMT (vehicle miles)
Solid Waste and Supporting Elements	50,719
Complementary Elements – 300,000 sq ft of building	11,873
Project Site Total (Solid Waste + Supporting Elements + 300,000 sq ft of Complementary Elements)	**62,592**
Solid Waste and Supporting Elements	50,719

Table 16-5. Project Vehicle Miles Traveled

Project Elements	Weekday Daily VMT (vehicle miles)
Complementary and Programmatic Elements – 1.9 million sq ft of building	65,619
Project Site Total (Solid Waste + Supporting Elements + 1.9 million sq ft of Complementary and Programmatic Elements)	**116,338**

Table 16-6 compares the estimated project-specific VMT to the regional VMT for South Placer County. As shown in Table 16-6, VMT generated by the project is anticipated to increase from 9,935,503 vehicle miles to 9,998,095 vehicle miles for the proposed WPWMA expansion of the solid waste elements, supporting elements, and 300,000 square feet of building space for the complementary elements. This change is an increase of 62,592 vehicles miles (representing 0.63 percent of the regional VMT). An increase of 1.17 percent in the regional VMT would be expected for the proposed expansion of the solid waste elements, supporting elements, and 1.9 million square feet of building space for the complementary and programmatic elements.

Table 16-6. Vehicle Miles Traveled Comparison

Scenario	Daily VMT	Units	Change	%
Existing (Year 2018) Regional South Placer County	9,935,503	vehicle miles		
Existing (Year 2018) Regional South Placer County Plus Project				
- Solid Waste + Supporting + 300,000 sq ft Complementary Elements	9,998,095	vehicle miles	62,592	0.63%
- Solid Waste + Supporting + 1.9 million sq ft Complementary/Programmatic Elements	10,051,841	vehicle miles	116,338	1.17%

The increase the regional VMT in South Placer County over year 2018 existing conditions associated with project implementation would substantially exceed the identified significance thresholds. These increases in regional VMT would be primarily driven by the increased generation of solid waste associated with the anticipated growth in residential development, employment, and services within the area. The project by its nature would accommodate the increase in waste and recyclable materials in response to the increased population within the area.

This impact analysis is very conservative because it includes heavy truck trips, which were not contemplated in CEQA Guidelines Section 15064.3(a) Technical Advisory (OPR 2018), and it does not account for the reduction in vehicle trips that could be generated by locating compatible manufacturing operations directly adjacent to potential source materials. However, it would be very difficult for a solid waste management facility that accepts waste from a region to reduce VMT when the region is growing. Therefore, the increase in VMT in South Placer County associated with project implementation is considered a significant impact. This conclusion is consistent with the impact conclusion included in the SAP/PRSP EIR for the project site.

Plan Concept 2

As described in Chapter 3, Project Description, the primary differences between Plan Concept 1 and Plan Concept 2 are related to where various facilities would be located on the WPWMA's property and when various facilities would be developed. These differences do not change the conclusions identified for Plan Concept 1. As such, impacts as a result of implementation of Plan Concept 2 would be the same as those described for Plan Concept 1.

Mitigation Measure 16-2: Increase in Vehicle Miles Traveled

Prior to the initiation of project construction activities, the WPWMA will prepare a Transportation Demand Management Plan to minimize the increase in VMT. The Transportation Demand Management Plan will include specific measures intended to reduce employee vehicle trips, such as carpool and ride-share incentive strategies.

Level of Significance after Mitigation

The identified mitigation measure would reduce VMT associated with project implementation. However, because of the nature of the project, which is proposed in part to accommodate growth in the waste stream within South Placer County, a net increase in VMT would be expected with project implementation. This increase would be greater than the identified significant threshold, and this impact would remain **significant and unavoidable**.

IMPACT 16-3	**Increase in Vehicle Hazards**. The proposed project does not include roadway design changes and would not substantially increase hazards for vehicles as a result of a geometric design feature or incompatible uses. During the installation of utility upgrades within local roadways and site access improvements, temporary lane closures would be necessary to accommodate construction activities. However, these roadway construction activities would include the implementation of standard construction traffic management procedures that would minimize potential temporary traffic hazards. In addition, during site operations, the improvements to the site entrance would be expected to minimize potential vehicle conflicts associated with vehicles backing up on Athens Avenue. Therefore, this impact would be **less than significant**.

Plan Concept 1

Operations.

The increase in vehicle trips associated with the proposed project operations would be expected to increase the number of vehicles entering the central property from Athens Avenue and queuing on the site prior to dumping materials. This increase in vehicles could result in backups on Athens Avenue during peak conditions if additional queuing capacity is not provided on the site. However, the proposed project includes entrance improvements that are intended to increase vehicle capacity and throughput for solid waste operations on the central property. In addition, some of the solid waste traffic associated with the existing facility would be diverted to the western property, which would reduce the potential for vehicle backups on Athens Avenue at the central property entrance. By limiting the potential for backups on Athens Avenue associated with solid waste operations, the proposed project would not be expected to increase the potential for traffic conflicts that could result in vehicle stacking hazards on this roadway during site operations. Therefore, this impact would be less than significant.

Construction.

Project implementation would require some existing utility infrastructure buried within local roadways to be upgraded. Also, the existing entrance on Athens Avenue that provides access to the central property is proposed to be upgraded to accommodate the expanded solid waste operations on this property. The entrance improvements have been designed to increase the number of vehicles that can enter the site without resulting in vehicle backups on Athens Avenue.

The unimproved segment of Athens Avenue that extends west of the Fiddyment Road and Athens Avenue intersection is proposed to be improved to accommodate access to proposed solid waste uses on the western property. In addition, to accommodate the movement of vehicles and materials between the central and western properties, the installation of a crossing over or under Fiddyment Road is proposed. Finally, the construction of complementary and programmatic elements on the western property would require the construction of new access locations on Fiddyment Road.

The proposed utility upgrades and new or expanded entrance facilities may require temporary lane closures to accommodate construction activities. The construction of any facilities that could affect local vehicle circulation would be required to comply with applicable construction traffic management requirements that have been established to maintain safety and reduce traffic hazards. This includes the use of appropriately trained personnel to direct traffic, the placement of temporary signage, and the use of other traffic safety equipment. Standard engineering practice for roadway construction projects includes complying with the *Manual for Uniform Traffic Control Devices* (FHWA 2012) so that appropriate signage, pavement delineations, and traffic control devices are being used. These types of roadway construction projects and associated traffic management activities are common in the area and would not be expected to cause unique roadway hazards. Therefore, project construction would not be expected to substantially increase vehicle hazards, and this impact would be less than significant.

Plan Concept 2

As described in Chapter 3, Project Description, the primary differences between Plan Concept 1 and Plan Concept 2 are related to where various facilities would be located on the WPWMA's property and when various facilities would be developed. These differences do not change the conclusions identified for Plan Concept 1. As such, impacts as a result of implementing Plan Concept 2 would be the same as those described for Plan Concept 1.

IMPACT 16-4	**Inadequate Emergency Vehicle Access**. The proposed project would not result in inadequate emergency vehicle access to or around the project site. The project site can be accessed from multiple directions along local roadways. Also, the proposed project includes upgrading existing site access locations and installing new site access locations to accommodate the site improvements. Therefore, impacts would be **less than significant**.

Plan Concept 1

Construction.

During construction activities that affect local roadways, necessary temporary lane closures could delay emergency vehicle access to the site or through the area. However, as described previously in Impact 16-3, the construction of any facilities that could affect local vehicle circulation would be required to comply with standard construction traffic management requirements that have been established to maintain

safety and reduce traffic hazards. These traffic management requirements include verifying that access is maintained for emergency vehicles throughout the construction period. Furthermore, as discussed in Chapter 11 Hazards, Hazardous Materials and Wildfire, the WPWMA would be required to prepare a Construction Transportation Management Plan, which would need to identify strategies for providing adequate emergency vehicle access at the site throughout construction periods. Therefore, the proposed construction activities would not interfere or substantially delay emergency vehicle access to the project site or within the local area, and this impact would be less than significant.

Operation.

The project site can be accessed from the south and north via Fiddyment Road, and from the east via Athens Avenue. For the project site's center and eastern properties, emergency vehicle access is available at the main entrance along Athens Avenue. In addition, three existing access locations are located along Fiddyment Road. Although these access locations are gated and rarely used, they would provide alternative access options in the event of an emergency at the central or eastern property.

For the western property, emergency vehicle access would be provided by the extension of Athens Avenue onto the western property from the Fiddyment Road and Athens Avenue intersection. This new entrance onto the western property would be required to be constructed to accommodate the anticipated vehicle traffic associated with the site uses as well as to accommodate emergency vehicle access. With the construction of complementary and programmatic elements, construction of additional access locations would be required to accommodate site circulation. Construction of these new access locations would improve emergency vehicle access at the site. Therefore, emergency vehicle access impacts are considered to be less than significant.

Plan Concept 2

As described in Chapter 3, Project Description, the primary differences between Plan Concept 1 and Plan Concept 2 are related to where various facilities would be located on the WPWMA's property and when various facilities would be developed. These differences do not change the conclusions identified for Plan Concept 1. As such, impacts as a result of implementing Plan Concept 2 would be the same as those described for Plan Concept 1.

16.4 References

Ascent Environmental (Ascent). 2019. *Final Environmental Impact Report, Sunset Area Plan/Placer Ranch Specific Plan.* Prepared for Placer County. October.

Governor's Office of Planning and Research (OPR). 2018. *Technical Advisory on Evaluating Transportation Impacts in CEQA*. April.

Federal Highway Administration (FHWA). 2012. *Manual for Uniform Traffic Control Devices for Streets and Highways.* U.S. Department of Transportation. May.

Fehr and Peers, 2018. *Sunset Area Plan and Placer Ranch Specific Plan, Final Transportation Impact Study*. Prepared for Placer County. December.

Institute of Transportation Engineers (ITE). 2017. *Trip Generation Manual, 10th Edition.*

Kittelson & Associates. 2018. *Placer County Regional Bikeway Plan, 2018 Update*. Final. June.

Placer County. 2013. *Placer County General Plan, Countywide General Plan Policy Document*. Update approved by the Board of Supervisors on May 21, 2013.

Placer County. 2019. *Sunset Area Plan*. December.

Placer County. 2020. *County of Placer Transportation Study Guidelines*. November.

Placer County Transportation Planning Agency. 2019. *Highway 65 Widening*. May. http://pctpa.net/projects/sr65widening/.

17. Utilities and Service Systems and Energy

This chapter describes existing utility, service, and energy systems associated with the proposed project and evaluates the potential impacts to utilities and service systems from implementing Plan Concept 1 and Plan Concept 2 of the *Renewable Placer: Waste Action Plan* (Waste Action Plan). This chapter also discusses the consumption and generation of energy resources from project implementation.

17.1 Environmental Setting

17.1.1 Water Supply

The Placer County Water Agency (PCWA) supplies potable water and fire suppression water to the site. Water for washing and drinking is available in the administration building breakroom and in restrooms. The water system provides water to emergency eyewash and shower stations located throughout the site. Of PCWA's over 300,000 acre-feet in annual entitlements, PCWA delivers approximately 116,500 acre-feet per year within its Western Water System, which extends from the community of Alta to the south and west along the Interstate (I)-80 corridor, excluding the City of Roseville, and to the northern county line along State Route (SR) 65. PCWA also provides irrigation water through an extensive canal system and approximately 23,600 acre-feet per year of untreated water to neighboring water providers, including the City of Roseville, for treatment and resale (PCWA 2016).

The proposed project is located in PCWA's Zone 5 retail service area, specifically within the Sunset Industrial Area subarea of the zone (PCWA 2016). Water supply in the subarea is provided through a single 18-inch pipeline in Athens Avenue that connects to the main line at the intersection of Sunset Boulevard and SR 65, where a 10-million-gallon treated water tank is also located (Placer County 2015). PCWA pumps water to the subarea from the Middle Fork American River, where the agency has existing water entitlements, to the Auburn Ravine via the Auburn Tunnel before the water is distributed. The subarea had an annual demand of 1,505 acre-feet in 2015 (PCWA 2016).

Regarding water entitlements, through existing contracts and water rights, the Sunset Area may be supplied with surface water through one or multiple of the following (PCWA 2017):

- Pacific Gas & Electric (PG&E) Company Contract – 100,400 acre-feet per year (afy)
- Middle Fork Project Water Rights – 120,000 afy
- Central Valley Project Contract – 35,000 afy
- Pre-1914 Water Rights – 3,400 afy

PCWA's 2015 Urban Water Management Plan (UWMP) (PCWA 2016) documents a detailed analysis of existing and projected water supply and demand and the PCWA's ability to meet demand during single and multiple dry years. This UWMP was used as the basis for the Water Supply Assessment (WSA) for the Sunset Area (PCWA 2017). The WSA and Sunset Area Plan (SAP) conclude that PCWA has sufficient entitlements to supply customers at full buildout of the Sunset Area, assumed to be "sometime soon after the 2045 planning horizon," during single and multiple dry year conditions, despite reductions in diversions from PG&E, Central Valley Project, and Pre-1914 Water Rights under such conditions (PCWA 2016).

The annual water consumption onsite, by operation, according to the most recent data available from the Western Placer Waste Management Authority (WPWMA) is presented in Table 17-1.

Table 17-1. Existing Water Demand by Operation

Operation	2013 Water Usage	
	mgy	mgd
MRF and landscaping	16.5	0.05
Module 5 excavation	9.6	0.03
Composting	7.8	0.02
Landfill	3.1	0.01
Energy 2001	0.1	0.00
Total	**37.1**	**0.10**

Source: WPWMA 2021.

Notes:

mgd = million gallons per day
mgy = million gallons per year
MRF = Materials Recovery Facility

An onsite production well located adjacent to the facility entrance provides nonpotable water for composting operations, landscape irrigation, and dust control. It is assumed that this well was used for landscaping and composting operations in 2013. This production well was decommissioned in June 2021. Nonpotable water from the compost leachate ponds can also be reused in the composting process.

17.1.2 Wastewater

Wastewater treatment and conveyance services in the project area are provided by the South Placer Wastewater Authority (SPWA) joint powers authority (JPA), which includes the City of Roseville, South Placer Municipal Utility District (SPMUD), and Placer County. The service boundary for SPWA is bounded at Fiddyment Road and Athens Avenue in the middle of the project site. The City of Roseville manages the service area within the city limits, while SPMUD's service area is predominantly limited to the cities of Rocklin and Loomis, and Placer County covers parts of the service area that are unincorporated, including the project site, which falls under County Service Area 28, Zone 2A3 (Placer County 2015; RMC 2009).

Wastewater from processing operations (wash down) is conveyed from an onsite lift station through a 4-inch force main located within Athens Avenue, through two additional lift stations on Thunder Valley Court and Industrial Avenue, a gravity main, and a sewer trunk line before and reaching the Pleasant Grove Wastewater Treatment Plant (WWTP) located in the City of Roseville, approximately 3 miles southwest of Fiddyment Road and Sunset Boulevard. The Pleasant Grove WWTP was designed to treat 12 mgd, though it has an effective treatment capacity of 9.5 mgd as a result of high organic loading in the system (RMC 2009). Construction on an expansion of the plant to reach the current design capacity of 12 mgd was scheduled to begin construction in 2020 (City of Roseville 2020). Additionally, conveyance infrastructure within the Sunset Area has been determined to be inadequate for the full buildout of the SAP, and recommended improvements in the project area include increasing the diameter of the existing force main in Athens Avenue from 4-inch to 24-inch and installing a new 30-inch force main down Fiddyment Road from Athens Avenue to a connection point within Placer Ranch (Placer County 2017).

From 2009 to 2019, the WRSL averaged an annual discharge of less than 0.01 mgd to the sewer system, while the MRF was billed for an average annual discharge rate of 0.003 mgd, though actual MRF discharges are not known (WPWMA 2021).

17.1.3 Reclaimed Water

Although PCWA provides potable water supply to the project site, it is not anticipated to have the capability to provide the project area with reclaimed water until 2025. The City of Roseville, which is an entity within the SPWA JPA that provides wastewater service to the site, treats water at its Pleasant Grove and Dry Creek WWTPs. However, although the project site discharges wastewater to Pleasant Grove, existing infrastructure does not allow the reclaimed water from the WWTP to be conveyed to the site.

The City of Lincoln may have capacity to provide reclaimed water to the project site through a "purple pipe" from the City's wastewater treatment and reclamation facility (WWTRF) located on Fiddyment Road, approximately 1.5 miles north of the project site. The purple pipe is located within Fiddyment Road and currently provides reclaimed water to the irrigation pivots on the WPWMA's western property. More than 2.5 mgd of wastewater from Placer County is treated at the Lincoln WWTRF and used as reclaimed water supply, and, according to projections by the City of Lincoln, this amount is expected to increase to 3.5 mgd by 2045 (City of Lincoln 2021). This increase in treated reclaimed water at the WWTRF could allow for additional, affordable uses for reclaimed water at the project site, including in the composting process and as landscape irrigation and dust control in lieu of other onsite nonpotable water supplies, with appropriate infrastructure.

17.1.4 Solid Waste

As discussed in Chapter 1, Introduction, and presented in Figure 1-1, the WPWMA owns, operates, and maintains the MRF building, organics management operation, construction and demolition (C&D) materials processing area, public waste drop-off area, household hazardous waste (HHW) facilities, and Western Regional Sanitary Landfill (WRSL) at the project site and provides solid waste recycling, recovery, and disposal services to the Placer County and the cities of Lincoln, Rocklin, Roseville, Auburn, and Colfax and the Town of Loomis. Residential and commercial solid waste collection is performed by Recology Auburn Placer in western Placer County except in the cities of Lincoln and Roseville, where the cities provide their own waste collection services. Waste and recyclable materials are currently received at the WPWMA site from two of the four waste collection franchise areas (Districts 1 and 4) in unincorporated Placer County, the cities of Roseville, Rocklin, Lincoln, Colfax, and Auburn, and the Town of Loomis.

The WRSL (31-AA-0210) is permitted through 2058 with a maximum permitted capacity of 36.35 million cubic yards (cy); as of June 2020, it has an estimated remaining capacity of approximately 23.2 million cy (CalRecycle 2021).

17.1.5 Electricity and Natural Gas

Electricity at the project site is provided by Pioneer Community Energy (a community-owned provider of electricity and formed as part of the Community Choice Aggregation program) and transmitted through the electrical grid owned by PG&E. PG&E operates a number of overhead and underground electrical distribution lines and high-voltage transmission lines near the project site, including double-circuit, 230-kilovolt lines, for which an easement is maintained on the WPWMA's central and western properties (see Figure 1-3). The project site is serviced by a joint overhead electric and communications line (Placer County 2015). There is no natural gas service at the project site; the nearest PG&E natural gas line

terminates at the Thunder Valley Resort, approximately 1 mile from the WPWMA's eastern property boundary.

A landfill gas (LFG)-to-energy facility owned and operated by Energy 2001 Inc. under a lease agreement with the WPWMA is located on the northern side of the site. Energy 2001 generates power from the combustion of LFG, which is sold through the grid; none is used on site. The Energy 2001 facility currently uses up to 1,800 standard cubic feet per minute (scfm) of LFG; the facility also includes a small flare capable of handling up to an additional 450 scfm of LFG. In the future, the WPWMA may explore opportunities to use electricity generated from LFG to offset electricity demand at the facility.

17.1.6 Telecommunications

Telecommunications services near the project site are provided by privately owned service providers. An evaluation of existing telecommunications facilities was conducted on behalf of the Placer Ranch Specific Plan (PRSP) in 2017 and published in 2018 (Capitol Utility Specialist, Inc. 2018). The final report identified several existing telecommunications networks near the project site, including the following:

- AT&T is the primary telecommunications provider in the project area and has fiber conduit installed on poles with joint overhead power and communication lines along Fiddyment Road through the project site and along Athens Avenue (Placer County 2015). The AT&T Stanford/Rocklin central office is also located on Industrial Avenue, north of West Sunset Boulevard, approximately 1.5 mile southeast of the eastern property boundary, and the provider owns a controlled environmental vault (CEV) on Woodcreek Oaks Boulevard, approximately 1 mile southeast of the eastern property boundary (Capitol Utility Specialist, Inc. 2018).
- Comcast has existing fiber lines ending at Fiddyment Road south of the project site in the same location as AT&T, and at Woodcreek Oaks Boulevard near the AT&T CEV (Capitol Utility Specialist, Inc. 2018).
- Consolidated Communications operates its Placer Corporate CO on Placer Corporate Drive north of West Sunset Boulevard, approximately 1.7 miles southeast of the eastern property boundary, and owns fiber lines that are stubbed on West Sunset Boulevard and North Foothills Boulevard, both less than a mile southeast of the project site (Capitol Utility Specialist, Inc. 2018).
- Sprint owns and operates an existing fiber-optic communications line running directly through the project site along Fiddyment Road (Capitol Utility Specialist, Inc. 2018).
- Wave Broadband owns a fiber conduit that currently ends west at Sunset Boulevard and Cincinnati Avenue, approximately 1.4 miles southeast of the eastern property boundary (Capitol Utility Specialist, Inc. 2018).

17.1.7 Sitewide Energy Use

Sitewide operations that require energy use primarily include the MRF building, organics management operation, C&D materials processing area, public waste drop-off area, HHW facilities, and the WRSL. Additionally, energy is used at support facilities, such as the administration building, scale house, maintenance area, and for support systems, such as lighting, site security, and firefighting equipment. More information on each facility's day-to-day operations is described in Chapter 1 – Introduction.

The MRF building employs both stationary and off-road equipment to receive and sort MSW. Stationary equipment at the MRF includes pit conveyors, rotating trommels, screens, and baler units, operated to process MSW from the receiving floor into material for additional processing, sale, or disposal. Exhaust fans are operated for ventilation. Stationary equipment is generally powered by electricity. Off-road

equipment includes front-end loaders, forklifts, sweepers, and roll-off trucks, using primarily diesel or gasoline fuels. Additionally, there is fuel use associated with daily on-road traffic entering and exiting the MRF to unload and pick up materials.

The organics management operation employs both stationary and off-road equipment to receive and process organics. Stationary equipment includes trommels, screens, and conveyors and is powered by either electricity or diesel. Off-road equipment includes grinders, front-end loaders, straddle turners, water trucks, and other transport trucks, using primarily diesel and gasoline fuels. Additionally, there is fuel use associated with daily on-road traffic unloading organic material or picking up material for sale.

The C&D materials processing area employs both stationary and off-road equipment to receive and process C&D material. Stationary equipment includes the process line, conveyors, grinders and screens that are generally powered by electricity. Off-road equipment includes loaders, forklifts, an excavator, a portable wood grinder, and transport trucks that primarily use diesel and gasoline fuels. Additionally, there is fuel use associated with daily on-road traffic unloading C&D material or picking up material for additional processing or sale.

The public waste drop-off area employs a few pieces of primarily diesel- and gasoline-powered off-road equipment and trucks to transport materials dropped off by the public for processing at other parts of the site. The primary energy use at the public waste drop-off area is attributed to public vehicles traveling to the site to unload material at the Z-wall.

The HHW facilities include the HHW receiving area (co-located with the buy-back center and one of several components of the existing public waste drop-off area) and at the HHW building. At both locations, primary energy use is attributed to public vehicles traveling to the site to unload HHW. Forklifts are used to transport materials between the two HHW facilities.

The WRSL disposal operations are conducted up to 7 days a week and employ several types of off-road equipment to manage incoming wastes, including excavators, dozers, compactors, graders, water trucks, and dump trucks. Gasoline-powered generators are also used at the landfill working face to power movable lighting seasonally or as necessary. During construction and final closure of landfill modules, there are additional pieces of off-road equipment similar to those used during daily fill operations. Additionally, there is fuel use associated with daily on-road traffic delivering material to the landfill working face.

Thus, energy use at the site primarily includes the following:

- Electricity for buildings, scale house, and stationary equipment attributed to site operations
- Diesel and gasoline fuels for stationary and off-road equipment attributed to site operations
- Diesel and gasoline fuels for vehicles delivering materials to, or hauling recyclable materials from, the facility

Sitewide energy use at the WPWMA's facility was quantified by using a combination of 2018 site electricity, diesel, and gasoline usage data, as well as off-road equipment lists and scale house data for onsite vehicles with assumed fuel economy estimates. The WPWMA provided site-specific data for electrical, diesel, and gasoline usage for the facility and onsite equipment in 2018. Additionally, the WPWMA provided 2018 scale house data for vehicles entering the facility. Estimated regional travel distances and assumed fuel economy rates were used in conjunction with scale house vehicle data to estimate 2018 diesel and gasoline fuel consumption associated with transportation. Sitewide energy use is detailed in Table 17-2.

Table 17-2. Sitewide Energy Use in 2018

Source	Energy Consumption	Units
Facility		
Electricity Use	3,531,870	kWh/year
Onsite Equipment (Diesel)	232,986	gallons/year
Onsite Equipment (Gasoline)	10,393	gallons/year
Onsite Equipment (Propane)	20,753	gallons/year
Transportation		
Diesel		
Public Vehicles (Diesel)	2,289	gallons/year
Commercial Vehicles (Diesel)	32,560	gallons/year
Internal Operations (Diesel)	645	gallons/year
Outbound Recyclables (Diesel)	2,141	gallons/year
Sitewide Employees (Diesel)	0[a]	gallons/year
Gasoline		
Public Vehicles (Gasoline)	107,282	gallons/year
Commercial Vehicles (Gasoline)	19,932	gallons/year
Internal Operations (Gasoline)	0[b]	gallons/year
Outbound Recyclables (Gasoline)	25	gallons/year
Sitewide Employees (Gasoline)	56,521	gallons/year

Source: WPWMA 2020a.

[a] Assumes site employee personal vehicles use gasoline.

[b] Assumes internal site operations vehicles use diesel.

Note:

kWh = kilowatt hour(s)

17.2 Regulatory Setting

17.2.1 Federal

Resource Conservation and Recovery Act

The Resource Conservation and Recovery Act (RCRA) was enacted in 1976, codified under Title 42 of the *United States Code* Section (§) 6901 *et seq*. RCRA is overseen by the United States Environmental Protection Agency (EPA) and serves as the primary regulation governing disposal of solid and hazardous waste in the United States. Subtitle D of the RCRA regulates nonhazardous solid waste and establishes the minimum federal criteria for the design and operation of municipal and industrial waste landfills

(EPA 2020). In accordance with RCRA Subtitle D, Title 40 of the *Code of Federal Regulations*, Part 258 establishes criteria for MSW landfills, including criteria for location, operation, design, groundwater monitoring, and closure of landfills, and Part 239 establishes requirements for state permitting programs to uphold the federal criteria.

17.2.2 State

Senate Bill 610

Senate Bill (SB) 610, enacted in 2001, requires urban water suppliers to identify existing and expected future sources of water available to the supplier and disclose those sources in their UWMP. It further requires that additional information be included in the UWMP if groundwater is identified as a source of water to be used. According to the Bill, failure to submit a UWMP disqualifies the supplier from receiving drought and other bond assistance programs from the state until the plan is submitted. Further, the legislation requires projects that are both subject to California Environmental Quality Act (CEQA) and considered a "water demand project," as defined under CEQA Guideline Section 15155, to identify all applicable water supply systems that may provide water for the project and conduct a WSA to evaluate existing water rights, entitlements, and contracts compared with projected water demands.

Title 22

California Code of Regulations (CCR) Title 22 Division 4.3 establishes criteria level of treatment, monitoring and reporting, and acceptable uses for reclaimed water. These guidelines are overseen and enforced by the Division of Drinking Water.

Title 22 Division 4.5 establishes standards for universal waste, which are enforced by the California Department of Toxic Substances Control. Universal wastes are defined in § 66261 to include batteries, fluorescent lights, electronics, some appliance components, mercury thermostats and other mercury-containing equipment, and aerosol cans that have not been emptied. These universal wastes must be handled, transported, manufactured, and recycled in compliance with the standards established in Chapters 12 through 17 of the code.

Title 24

CCR Title 24, Part 11 (*California Green Building Standards Code*, or CALGreen) establishes green building measures for newly constructed buildings and additions and alterations to existing buildings. The purpose of the code is to improve health, safety, and general welfare by enhancing the design and construction of buildings to incur a reduced negative impact or positive environmental impact and to encourage sustainable construction practices in the following areas: planning and design, energy efficiency, water efficiency and conservation, material conservation and resource efficiency, and environmental quality.

17.2.3 Local

The WPWMA is a JPA composed of Placer County and the cities of Lincoln, Rocklin, and Roseville to own and operate a regional recycling facility and sanitary landfill. As a JPA, the WPWMA considers local regulations and consults with local agencies, but the County and city regulations are not applicable, as the County and cities do not have jurisdiction over the proposed project. Accordingly, the following discussion of local goals and policies associated with utilities and energy resources is provided for informational purposes only.

Placer County General Plan

The Placer County General Plan provides countywide goals that serve as the basis for evaluating proposed projects and actions within the County. The 2013 General Plan update includes policies and implementation measures that support those goals. Some of the relevant goals and policies that reflect Placer County's approach to managing public services and utilities are summarized in the following sections (Placer County 2013). Although the WPWMA is an independent government agency that is not required to comply with the County's policies, the WPWMA intends to implement a proposed project that is generally consistent with these policies.

Water Supply and Delivery.

Goal 4.C: To ensure the availability of an adequate and safe water supply and the maintenance of high-quality water in water bodies and aquifers used as sources of domestic supply.

- Policy 4.C.6: The County shall promote efficient water use and reduced water demand by:

  a) Requiring water-conserving design and equipment in new construction
  b) Encouraging water-conserving landscaping and other conservation measures
  c) Encouraging retrofitting existing development with water-conserving devices
  d) Encouraging water-conserving agricultural irrigation practices

Policy 4.C.7: The County shall promote the use of reclaimed wastewater to offset the demand for new water supplies.

Landfills, Transfer Stations, and Solid Waste Recycling.

Goal 4.G: To ensure the safe and efficient disposal or recycling of solid waste generated in Placer County.

- Policy 4.G.1: The County shall require all new urban/suburban development, excluding rural development, to include provisions for solid waste collection.
- Policy 4.G.2. The County shall promote maximum use of solid waste source reduction, recycling, composting, and environmentally-safe transformation of wastes.
- Policy 4.G.3. The County shall require discretionary permit approval for all new waste disposal facilities.
- Policy 4.G.4. The County shall ensure that solid waste disposal facilities do not contaminate surface or groundwater in violation of state standards.
- Policy 4.G.5. The County shall promote the siting of new solid waste collection and transfer facilities in locations as close as practical to the areas they serve.
- Policy 4.G.6. The County shall ensure that landfills and transfer stations are buffered from incompatible development.
- Policy 4.G.7. The County shall require that all new development complies with applicable provisions of the Placer County Integrated Waste Management Plan.
- Policy 4.G.8. The County shall encourage the development of regional and community-based recycling facilities in heavy commercial and industrial areas.
- Policy 4.G.9. The County shall encourage businesses to use recycled products in their manufacturing processes and consumers to buy recycled products.

- Policy 4.G.10. The County shall encourage the establishment and implementation of a recycling market development zone in Placer County.
- Policy 4.G.11. When considering land use changes in the vicinity of a landfill operation, the County shall consider the landfill as the dominant land use in the area. In order to protect these facilities from incompatible encroachment, new residential land uses shall be separated from the property lines of active and future landfill sites by a buffer of one mile. Such buffers do not apply to closed landfills or solid waste transfer stations. Other uses will be required to provide buffers as described in Table 1-5 (of the 2013 General Plan). The intent of this policy is to prohibit the creation of new parcels for residential use within one mile of the landfill; not to prohibit construction of a residence on an existing legal building site within this area.
- Policy 4.G.12. The County shall ensure that solid waste collection service is available to all residential, commercial, and industrial areas within the current boundaries of Franchise Areas.

Sunset Area Plan

In addition to the Placer County General Plan, the project area is located within a part of Placer County where development is guided by the goals and policies established in a specific plan (the SAP) (Placer County 2019a). As stated previously in relation to Placer County General Plan policies, the WPWMA is an independent government agency that is not required to comply with SAP policies established by the County. However, the WPWMA intends to implement a proposed project that is generally consistent with these policies. The following SAP policies and implementation programs are described because of their relevance to public services and utilities:

Wastewater Collection, Treatment, and Disposal.

Goal PFS-4: To ensure adequate wastewater collection and treatment and the safe disposal of liquid waste.

- Policy PFS-4.3: Pretreatment of Commercial and Industrial Wastes. The County shall require to the extent possible pretreatment of commercial and industrial wastes prior to their entering community collection and treatment systems.
- Policy PFS-4.4: Recycled Water Irrigation Uses. The County shall require the use of recycled water, wherever feasible, for irrigation, including commercial, and industrial landscaping, landscaping within public rights-of-way (e.g., medians), parks, open space, and agricultural lands.

Solid Waste Disposal and Recycling.

Goal PFS-6: To ensure the safe and efficient disposal or recycling of solid waste generated in the Sunset Area.

- Policy PFS-6.1: Maximize Waste Reduction. The County shall promote maximum use of solid waste source reduction, recycling, composting, and environmentally-safe transformation of wastes.
- Policy PFS-6.2: Solid Waste Facility Buffers. The County shall support efforts of the Western Placer Waste Management Authority to ensure that landfills and other solid waste facilities (e.g., material recovery, composting) are buffered from incompatible development.
- Policy PFS-6.3: Solid Waste Facility Compliance. The County shall require that all new solid waste facilities and operations comply with applicable provisions of the Placer County Integrated Waste Management Plan.
- Policy PFS-6.4: Encourage Use of Recycled Products. The County shall encourage businesses to use recycled products in their manufacturing processes and consumers to buy recycled products.

- Policy PFS-6.5: Recycling Market Development Zone. The County should promote the recycling market development zone (RMDZ) in the Sunset Area in the area around the Western Placer Waste Management Authority's Material Recovery Facility.
- Policy PFS-6.6: Placer County Franchise Area 1. The County shall require new developments in the Sunset Area to participate in County Franchise Area 1 for collection and disposal of solid waste.

Telecommunications.

Goal PFS-9: To promote state-of-the-art telecommunication services to support economic development and to meet the needs of employers and residents of the Sunset Area.

- Policy PFS-9.3: Telecommunications Technology in New Development. The County shall require the installation of state-of-the-art internal telecommunication technologies in new large-scaled residential, office, and commercial developments.

Placer County Sustainability Plan

Energy.

- Strategy E-12: Support increases in renewable energy generation and storage systems for existing nonresidential structures.
- Strategy E-17: Promote onsite renewable energy generation and energy storage for new small- and medium-sized nonresidential structures.

Placer County Code

Placer County Code Chapter 8, Article 8.16 addresses solid waste collection and disposal. The code is enforced by Placer County Environmental Health Services, which is certified by CalRecycle to serve as the Local Enforcement Agency (LEA). LEAs are responsible for confirming that solid waste facilities are operated and closed in accordance with all applicable regulations. These responsibilities may include inspections, permitting, and other forms of enforcement (CalRecycle 2020).

Sections within the article that may be applicable to the proposed project include the following:

8.16.050 Solid waste management practices, general provisions

A. All solid wastes shall be stored, collected, utilized, treated, processed and disposed of in such a manner that a health hazard, public nuisance or impairment of the environment shall be kept within state and local standards. All solid wastes shall be disposed of at approved disposal sites.

B. All solid wastes shall be handled in such a manner so as not to be conducive to the breeding, sheltering or harboring of insects and rodents or to the support of any disease vector.

C. All solid waste systems shall be operated in such a manner so as not to substantially contribute to pollution or degradation of the atmosphere or surrounding lands or constitute a fire hazard.

D. Extremely hazardous wastes shall not be disposed of in any area without proper licensing.

E. Liquid wastes, sludges, and nonsewerable wastes shall not be accepted or disposed at a land disposal site without written approval of the department.

F. Solid wastes other than inert materials used for flood and erosion control shall not be placed on or within the one hundred (100) year floodplain of any watercourse.

G. No system for solid waste handling, processing, storage, recovery, salvage, or disposal shall be placed in operation until proper licenses and/or permits are obtained.

H. All solid waste management systems or operations involved in storage, processing, recovery, salvage, or disposal are required to be properly licensed.

I. All solid waste management systems or operations involved in collection, storage, hauling, processing, recovery, salvage, or disposal shall place an approved operational plan on file with the Placer County health and human services and facility services departments.

J. No infectious, chemical or hazardous waste will be accepted in any landfill in Placer County without the written approval of the director.

K. It is unlawful, in Placer County, for any person, public or private, to place, deposit or dump or cause to be placed, deposited, or dumped, or allow to accumulate, any solid or liquid waste in, or upon, any public or private highway, street, alley or road, waterway, lake, stream, or any lot or parcel of land, whether public or private other than in approved disposal sites.

8.16.260 Disposal

Disposal must not create a hazard to public health. Each disposal site will be so situated to have sufficient facilities and be operated in a manner so as not to create a hazard or nuisance to the public's health, safety, or welfare. (Prior code § 9.28)

17.3 Impact Analysis and Mitigation Measures

17.3.1 Thresholds of Significance

The thresholds of significance for assessing impacts come from the CEQA Environmental Checklist. For utilities and service systems, the CEQA Checklist asks if the project would do the following:

- Require or result in the relocation or construction of new or expanded water, wastewater treatment, or storm water drainage, electric power, natural gas, or telecommunications facilities, the construction or location of which could cause significant environmental effects?
- Have sufficient water supplies available to serve the project and reasonably foreseeable future development during normal, dry, and multiple dry years?
- Result in a determination by the wastewater treatment provider that serves or may serve the project that it has adequate capacity to serve the project's projected demand in addition to the provider's existing commitments?
- Generate solid waste in excess of state or local standards, or in excess of the capacity of local infrastructure, or otherwise impair the attainment of solid waste reduction goals?
- Comply with federal, state, and local management and reduction statutes and regulations related to solid waste?

For energy, the CEQA Checklist asks if the project would:

- Result in potentially significant environmental impact caused by wasteful, inefficient, or unnecessary consumption of energy resources, during project construction or operation?
- Conflict with or obstruct a state or local plan for renewable energy or energy efficiency?

17.3.2 Methodology

The methodology to assess energy consumption associated with the proposed project focuses on the primary energy sources of electricity, diesel, and gasoline usage. Changes in energy types are expected to be representative for the analysis of proposed project impacts. Further, the changes in energy have been evaluated with respect to energy use from the perspectives of facility, transportation, and construction uses.

Facility Energy

The proposed project generally includes the same type of Waste Recovery and Waste Disposal operations as the current operation. The changes from the 2018 baseline are described in the Project Description but generally include expanded operations, a different composting method, and complementary and programmatic elements (pilot study area, compatible manufacturing, university research area, LFG-to-compressed natural gas, hydrogen, or other renewable fuels area). The organics management operation (currently composting) will be changing from a primarily windrow composting operation to include aerated static pile (ASP) composting with the potential for other organics management processing types in the future.

Electricity use for the solid waste elements of the proposed project was estimated by increasing 2018 electricity use in a manner consistent with the assumed 2 percent annual population and tonnage increase, as well as incorporating an estimate of projected electrical demand of a possible organic management operation in 2050. It is anticipated that increasing the 2018 electricity use in a manner consistent with annual population and tonnage increase is a reasonable estimate, given that electrical demand is not likely to uniformly increase in each solid waste project element. For example, some solid waste project elements may require a higher electrical demand associated with expanded hours of operations, whereas other elements may require less of an increased demand as hours of operation may not change.

The Project Description includes expanded operation of up to 24 hours at the MRF building, which can be accounted for in the 2 percent growth in energy demand, whereas electrical demand is not expected to increase at the same rate at the C&D area or public waste drop-off area. Bringing additional material to the MRF building may result in the potential for up to 24 hours of operations; however, throughput and capacity would not lead to the same increase in some other solid waste project elements. With respect to the electrical demand for the 2050 organic management operation, the energy estimate includes changes associated with the implementation of ASP composting. It is estimated that there may be notable changes in equipment. In particular, ASP composting may include the installation of electric blowers and other electric processing equipment, introducing a new electrical demand in the proposed project not present during 2018 baseline conditions; however, it will also result in a reduction in the use of diesel or gasoline fuels as a consequence of reducing or eliminating the need to turn material with a compost turner or other piece of heavy equipment.

In addition to the solid waste project elements (the Waste Recovery and Waste Disposal project elements) of the proposed project, a separate project-level analysis was performed for 300,000 square feet of

complementary elements (as described in Chapter 4 – Approach). The project-level analysis for 300,000 square feet of complementary elements used CalEEMod software and default assumptions to estimate electricity use for 300,000 square feet of manufacturing land use. Quantitative analysis for the full buildout of programmatic elements (approximately 1.9 million square feet) is not included in this project-level analysis.

Onsite equipment fuel use at each of the major proposed project elements was estimated by multiplying 2018 equipment quantities by a calculated tonnage factor increase tied to the estimated tons a specific facility would process, not to exceed a factor increase of 2.0. For example, the 2050 throughput of the organic management operation (157,900 tons) compared with 2018 throughput (60,606 tons) results in a calculated tonnage factor increase of 2.6 from 2018 conditions. For facilities with tonnage factor increases of 2.0 or less, 2018 equipment quantities were multiplied by the specific facility's tonnage factor increase to estimate 2050 diesel and gasoline equipment quantities (for example, one dozer in 2018 multiplied by a tonnage factor increase of 2.0 results in two dozers estimated for operations in 2050). For facilities with tonnage factor increases greater than 2.0 (such as the organics management operation and C&D area), the tonnage factor increase was capped at 2.0 because it is unlikely that equipment quantities would more than double as a result of operational and logistical space constraints, as well as opportunities to replace existing equipment with equipment of greater operational capacity. The tonnage factor increases in range from 1.55 to 2.0, depending on the facility. An average fuel consumption rate based on specific site or industry data (industry data were used when specific site data were not available) was applied to the estimated 2050 equipment quantities to estimate onsite equipment fuel consumption.

Transportation Energy

Transportation energy estimates for the solid waste project elements of the proposed project include fuel consumption from customers, including public and commercial vehicles, internal operations, vehicles transporting recyclables offsite, and employees. Transportation energy consumption was estimated by scaling up 2018 scale house and employee vehicle data in a manner consistent with the assumed 2 percent annual population and tonnage increase, assuming average onsite miles traveled based on Plan Concept 1 and 2 site layouts and average offsite miles traveled based on CalEEMod assumptions, and applying vehicle fuel economy factors from the U.S. Department of Energy, Office of Energy Efficiency and Renewable Energy (2021).

A separate project-level analysis was performed for 300,000 square feet of complementary elements (as described in Chapter 4 – Approach). The project-level analysis for 300,000 square feet of complementary area used CalEEMod software and default assumptions to estimate vehicle quantities for 300,000 square feet of manufacturing land use. Transportation energy consumption for 300,000 square feet of complementary elements was then calculated by using average onsite and offsite miles traveled, which were based on Plan Concept 1 and 2 site layouts and CalEEMod assumptions, and applying vehicle fuel economy factors from the U.S. Department of Energy, Office of Energy Efficiency and Renewable Energy (2021).

Construction Energy

Construction of the proposed project is anticipated to occur over multiple years throughout the project period, correlating with the priority and necessity of each project element. Proposed project construction is likely to be prioritized and planned based on several factors, including immediate needs for increased processing capacity, impacts to existing operations, availability of funding or financing, and staffing constraints. Because it is not known when each project element will be constructed, a maximum construction year was estimated to portray the highest reasonable amount of construction that may occur

within a given year. Construction is not expected to be constant throughout the project period, and there may be temporary increases in energy consumption while proposed project elements are being constructed. CalEEMod assumptions were used as a reference for construction-phase equipment-hours, construction worker commutes, and vendor and haul-truck routes. Vehicle fuel economy factors were derived from the U.S. Department of Energy, Office of Energy Efficiency and Renewable Energy (2021).

17.3.3 Impact Analysis

Elements of the proposed project that may result in an increased demand for utilities, service systems, and energy include continued and expanded operation of the various solid waste management activities at the WPWMA facility, commensurate with the projected population growth within the WPWMA's service area, plus supporting elements. In addition to solid waste management activities, complementary and programmatic elements may be developed on the WPWMA's properties. Complementary and programmatic elements may include the development of compatible technologies, pilot study areas, university research areas, and an LFG-to-compressed natural gas, hydrogen, or other renewable fuels area. The potential for these activities to result in increased demand for utilities, service systems, and energy and the corresponding environmental impact is described for the various sections that follow.

IMPACT 17-1	**Require the construction or relocation of utility facilities**. Project implementation would require a new fire protection water line and wastewater line extending to the western property. However, these new lines would be located within existing roadways and previously disturbed onsite areas that would be repaved or otherwise buried and returned to existing conditions after installation. No relocation of infrastructure for telecommunications or electricity would be required. Project implementation would also require the relocation of composting and public waste drop-off operations; however, the facilities would be relocated within the WPWMA property boundary. As such, overall, implementation of the proposed project would result in a **less-than-significant** impact.

Plan Concept 1

Water Supply.

Solid waste management activities at the WPWMA facility would continue and expand under Plan Concept 1, resulting in the ongoing need for potable and nonpotable water and associated infrastructure. As noted in Section 17.2.1, existing infrastructure is in place to provide potable water to the project site; however, the existing water supply line does not extend to the western property. Plan Concept 1 includes the extension of a new fire protection water supply line to the western property to supply new fire hydrants. The new water supply line would extend approximately 1 mile south along Fiddyment Road from the roadway's intersection with Athens Avenue to the intersection with Sunset Boulevard. A new wastewater conveyance line, as described in more detail as follows, would also be installed within Fiddyment Road, parallel to the new water supply line.

The installation of the new pipeline would require a trench to be excavated within Fiddyment Road. This excavation may require the closure of one lane during the construction period, which would result in minor vehicle delays. The excavation would expose soils to erosion during the construction period, though the trench would be refilled following pipeline installation, and construction would be limited to a single construction season. Further, best management practices (BMPs) intended to address the potential for violating water quality standards or waste discharge requirements, or otherwise substantially degrading surface or ground water quality similar to the BMPs identified in Chapter 12, Hydrology and Water Quality,

would be implemented for excavation activities associated with expanding existing water infrastructure. Therefore, expansion of the existing water supply infrastructure as a result of the solid waste management activities associated with implementation of Plan Concept 1 would result in a less-than-significant impact.

In addition to solid waste management activities, complementary and programmatic elements may be developed on the WPWMA's properties. Under the project level, for Plan Concept 1, up to 300,000 square feet of building plus exterior infrastructure are reserved in the northern part of the western property for the complementary solid waste management elements. Under the programmatic level, for Plan Concept 1, up to 1.6 million square feet have been reserved for these elements primarily within the northern and southern extents of the western property, and on the center property. However, opportunities may arise that would support locating some of these complementary and programmatic elements nearer to the solid waste project elements or within areas not yet developed with solid waste project elements.

The potable water demand associated with the complementary and programmatic elements is expected to increase as a result of the proposed project when compared with current demand. According to Appendix B to the SAP, *Water, Wastewater, and Recycled Water Technical Report* (Placer County 2017a), potable water demand within the Eco-Industrial land use designation, wherein the project would be located and would constitute the entirety of, is expected to increase to approximately 80.3 mgd at full buildout of the SAP. However, Appendix B assumes over 7.9 million square feet of building space Eco-Industrial land use designation. To estimate increases that may result from the proposed project, the 0.124 mgd difference between current demand (0.1 mgd as discussed in Section 17.1.1) and projected demand at full buildout (0.224 mgd as presented in Appendix B to the SAP, *Water, Wastewater, and Recycled Water Technical Report* [Placer County 2017a]) was divided across the 7.9 million square feet assumed in Appendix B (Placer County 2017a). Using this increase per square foot, the project-level complementary elements would be expected to increase potable water demand to 0.02 mgd, and the programmatic elements would increase demand to 0.12 mgd. While these would be increases compared with existing conditions, as described in Impact 7-2, there are sufficient water supplies to provide for this demand, and the Foothill and Sunset water treatment plants have capacity to treat 2.5 mgd of additional water to support buildout of the SAP and PRSP (Placer County 2018). Therefore, additional supplies and treatment capacity would not be required for the complementary and programmatic elements, resulting in a less-than-significant impact.

Wastewater.

As described in this chapter and in Section 3.5.5, relocation of the composting and public waste drop-off operations to the western property, as proposed under Plan Concept 1, would require installation of a new wastewater line extending from Athens Avenue to Sunset Boulevard within Fiddyment Road. This new pipeline was documented in the SAP Environmental Impact Report (EIR) and Appendix B to the SAP (Placer County 2017; 2019a). Because of the additional development proposed in the area, to minimize the need for future expansions, this pipeline has been proposed to be a 30-inch forcemain. Additionally, the SAP EIR also proposed to upgrade the existing 6-inch forcemain in Athens Avenue immediately north of the project site to a 24-inch forcemain.

As described previously, the new wastewater pipeline would be installed parallel to the required fire protection water line. The installation of the new pipeline would require a trench to be excavated within Fiddyment Road. This excavation would likely require the closure of one lane during the construction period, which would result in minor vehicle delays. The excavation would also expose soils to erosion during the construction period, though the trench would be refilled following pipeline installation, and construction would be limited to a single construction season. Further, BMPs intended to address the potential for violating water quality standards or waste discharge requirements, or otherwise substantially degrading surface or ground water quality similar to the BMPs identified in Chapter 12, Hydrology and

Water Quality, would be implemented for excavation activities associated with expanding existing water infrastructure. Therefore, expansion of the existing wastewater infrastructure as a result of the solid waste management activities associated with implementation of Plan Concept 1 would result in a less-than-significant impact.

In addition to solid waste management activities, complementary and programmatic elements may be developed on the WPWMA's properties. Under the project level, for Plan Concept 1, up to 300,000 square feet of building plus exterior infrastructure are reserved in the northern portion of the western property for the complementary solid waste management elements. Under the programmatic level, for Plan Concept 1, up to 1.6 million square feet have been reserved for these elements primarily within the northern and southern extents of the western property, and on the center property. However, opportunities may arise that would support locating some of these complementary and programmatic elements nearer to the solid waste project elements or within areas not yet developed with solid waste project elements.

The wastewater generated by the complementary and programmatic elements is expected to increase as a result of the proposed project when compared with current generation. According to Appendix B to the SAP, *Water, Wastewater, and Recycled Water Technical Report* (Placer County 2017a), wastewater disposal needs within the Eco-Industrial land use designation, wherein the project would be located and would constitute the entirety of, is expected to increase to approximately 0.21 mgd average dry weather flow at full buildout of the SAP. However, Appendix B assumes over 7.9 million square feet of building space within the Eco-Industrial land use designation. To estimate increases that may result from the proposed project, wastewater generation for the Eco-Industrial designation assumed in Appendix B to the SAP, *Water, Wastewater, and Recycled Water Technical Report* [Placer County 2017a]), not including the 200 equivalent dwelling units for the landfill, was divided across the 7.9 million square feet to estimate an average wastewater generation per square foot. Using this increase per square foot, the wastewater generated onsite would be expected to increase by approximately 0.008 mgd and 0.04 mgd for project-level complementary elements and programmatic elements, respectively.

Increases in wastewater generated as a result of the increase in permitted and processing capacities of the landfill and MRF were calculated by using the 2009–2019 average annual generation divided by existing capacity to determine a generation rate per cubic yard or ton for the landfill and MRF, respectively. In total, when combining expanded operations with the project-level and programmatic building space, the proposed project would be expected to result in a total generation of nearly 0.08 mgd. While these would be increases compared with existing conditions, as described in Impact 17-3, there is sufficient treatment capacity to accommodate this increase at Pleasant Grove WWTP, and new treatment infrastructure would not be required (Placer County 2018). However, the increase in wastewater generated is expected to require an increase in conveyance capacity to the Pleasant Grove WWTP to overcome existing capacity constraints within the forcemain. As such, as discussed in the SAP EIR, it is proposed that the existing 6-inch forcemain in Athens Avenue also be upgraded to a 24-inch line. Although this would be a new utility facility, this line would be along the same alignment as the existing line, which is located within a roadway that is disturbed under existing conditions and would be restored to existing conditions following construction. Therefore, this would also be considered a less-than-significant impact.

Reclaimed Water.

As discussed under Section 17.1.3, there is an existing recycled water line, or purple pipe, from the City of Lincoln's WWTP that currently conveys recycled water from the WWTP to the agricultural operations on the WPWMA's western property. This line does not currently provide recycled water to the central property or any onsite solid waste management facilities. However, under the proposed project, it is anticipated that reclaimed water may be periodically used in the composting process and as landscape irrigation and dust

control in lieu of other onsite nonpotable water supplies, as needed and permitted. This is expected to require the installation of a new connection to the existing purple pipe, as well as an elevated secondary tank on the central property near the existing southern compost pond. The excavation for the trench would likely require the closure of one lane during the construction period, which would result in minor vehicle delays. The excavation for the trench and any grading required for the elevated tank would also expose soils to erosion during the construction period, though the trench would be refilled following pipeline installation, and construction for both facilities would be limited to a single construction season. Further, BMPs intended to address the potential for violating water quality standards or waste discharge requirements, or otherwise substantially degrading surface or ground water quality similar to the BMPs identified in Chapter 12, Hydrology and Water Quality, would be implemented for excavation activities associated with expanding existing water infrastructure. Therefore, expansion of the existing reclaimed water infrastructure as a result of the solid waste management activities associated with implementation of Plan Concept 1 would result in a less-than-significant impact.

In addition to solid waste management activities, complementary and programmatic elements may be developed on the WPWMA's properties. Under the project level, for Plan Concept 1, up to 300,000 square feet of building plus exterior infrastructure are reserved in the northern portion of the western property for the complementary solid waste management elements. Under the programmatic level, for Plan Concept 1, up to 1.9 million square feet have been reserved for these elements primarily within the northern and southern extents of the western property, and on the center property. However, opportunities may arise that would support locating some of these complementary and programmatic elements nearer to the solid waste project elements or within areas not yet developed with solid waste project elements.

The recycled water demand associated with the complementary and programmatic elements is expected to increase as a result of the proposed project when compared with current demand. According to Appendix B to the SAP, *Water, Wastewater, and Recycled Water Technical Report* (Placer County 2017a), reclaimed water demand within the Eco-Industrial land use designation, wherein the project would be located and would constitute the entirety of, is expected to increase to approximately 0.088 mgd at full buildout of the SAP. However, Appendix B assumes over 7.9 million square feet of building space Eco-Industrial land use designation. The current daily volume of reclaimed water applied to the western property is not known. Therefore, conservatively, to estimate increases that may result from the proposed project, the entire 0.088 mgd was divided across the 7.9 million square feet assumed in Appendix B (Placer County 2017a). Using this increase per square foot, the project-level complementary elements would be expected to increase reclaimed water demand by less than 0.003 mgd, while the programmatic elements would increase demand by approximately 0.02 mgd. While these would be increases compared with existing conditions, the expected supply of reclaimed water from the City of Lincoln's WWTP is expected to exceed demand through 2045 (City of Lincoln 2016), so only the new infrastructure also required for solid waste management operations would be required to convey the reclaimed water to its point of use. Therefore, additional supplies and treatment capacity would not be required for the complementary and programmatic elements, resulting in a less-than-significant impact.

Electricity and Natural Gas.

The proposed project will increase the demand for electricity and possibly establish a need for natural gas; there are existing and planned facilities nearby, such as the Athens substation and Placer Ranch substation. Natural gas needs, if any, are expected to be met with existing infrastructure. Wiring and tie-ins to existing and future lines may be warranted; however, because the project location has access to electricity, ground disturbance is not expected to be significant. Additionally, the SAP EIR concludes that there is sufficient capacity in existing and future infrastructure to meet the demands of the SAP (Placer County 2019b). As such, impacts associated with implementation of Plan Concept 1 related to the construction or relocation of electricity infrastructure would result in a less-than-significant impact.

Telecommunications.

As described in Section 17.2.6, there are numerous existing fiber-optic telecommunications lines in the project area, including Sprint and AT&T lines, which run directly through the project site along Fiddyment Road. Plan Concept 1 does not include any proposed uses that would conflict with these existing telecommunication lines. Therefore, the relocation of telecommunication lines would not be required or expected with implementation of Plan Concept 1. The extension of these lines may be necessary to accommodate specific uses on the project site, such as the proposed complementary and programmatic elements. However, these extensions would be expected to occur alongside construction of those new uses and would not in and of themselves be expected to cause significant physical disturbance or unique environmental impacts. As such, impacts associated with implementation of Plan Concept 1 related to the construction or relocation of telecommunications infrastructure would result in a less-than-significant impact.

Plan Concept 2

As described in Chapter 3, Project Description, the primary differences between Plan Concept 1 and Plan Concept 2 are related to where various facilities would be located on the WPWMA's property and when various facilities would be developed. Impacts related to the construction or relocation of utilities as a result of implementing Plan Concept 2 would be the same as described for Plan Concept 1.

IMPACT 17-2	**Have sufficient water supplies**. The proposed project would result in increased potable and nonpotable water demand during both construction and operations. However, these increases were evaluated under the SAP WSA and the PCWA UWMP, and both analyses concluded that PCWA has sufficient water rights, contracts, and entitlements to supply the service area during normal, single dry, and multiple dry water years at full SAP buildout. As a result, this would be considered a **less-than-significant** impact.

Plan Concept 1

In compliance with SB 610, as discussed under Section 17.2.2, PCWA conducted a WSA of available surface water supplies and expected demand of the full buildout of the SAP, which includes the proposed project. As presented under Section 17.1.1, the PCWA WSA for the SAP, which reflects the conclusion of the 2015 PCWA UWMP and is consistent with the analysis and conclusions of the subsequent 2020 UWMP, concluded that PCWA has sufficient existing water supply to meet existing and planned future demand of development at buildout of the Sunset Area during normal, single dry, and multiple dry water years (PCWA 2017; PCWA 2021). Therefore, although increases in potable and reclaimed water demand would be expected as result of implementation of the proposed project, including solid waste management operations and the complementary and programmatic elements, no additional water rights, contracts, or entitlements would be required for the proposed project, resulting in a less-than-significant impact.

Plan Concept 2

As described in Chapter 3, Project Description, the primary differences between Plan Concept 1 and Plan Concept 2 are related to where various facilities would be located on the WPWMA's property and when various facilities would be developed. Impacts related to demands on water supply as a result of implementing Plan Concept 2 would be the same as described for Plan Concept 1.

IMPACT 17-3	**Have adequate wastewater treatment capacity**. Wastewater generated by the proposed project would be treated at Pleasant Grove WWTP where an expansion in treatment capacity from 9.5 mgd to 12 mgd is currently underway. The WWTP would have adequate capacity to treat the increase in wastewater, resulting in a **less-than-significant impact**.

Plan Concept 1

As discussed under Impact 17-1, operation of the proposed project is expected to result in the generation of approximately 0.08 mgd of wastewater per day by 2050, including solid waste management operations and the complementary and programmatic elements. This wastewater would be treated at Pleasant Grove WWTP in the City of Roseville. The Pleasant Grove WWTP currently has the capacity to treat 9.5 mgd but is permitted to treat up to 12 mgd. An expansion of the existing facilities to reach the permitted limit is currently underway (City of Roseville 2020). These improvements are being implemented largely in anticipation of buildout of both the SAP and PRSP, which are expected to generate a combined total of nearly 5.8 mgd of wastewater at full buildout, which would exceed the plant's current capacity (Placer County 2019b). This expansion is intended to accommodate full buildout, including the proposed project, which accounts for 0.08 percent and 0.5 percent of the anticipated increases in wastewater generation for the solid waste management operations and complementary and programmatic elements, respectively. As a result, Plan Concept 1 would have a less-than-significant impact.

Plan Concept 2

As described in Chapter 3, Project Description, the primary differences between Plan Concept 1 and Plan Concept 2 are related to where various facilities would be located on the WPWMA's property and when various facilities would be developed. Impacts related to increased demands on wastewater treatment facilities as a result of implementing Plan Concept 2 would be the same as described for Plan Concept 1.

IMPACT 17-4	**Generate solid waste in excess of standards or infrastructure capacity or impair the attainment of solid waste reduction goals**. Waste generated during both construction and operations of the proposed project would be minimal and disposed of in compliance with state and local standards. Implementation of the proposed project would increase local infrastructure and support the attainment of solid waste reduction goals, resulting in a **less-than-significant impact**.

Plan Concept 1

Construction-related wastes would be expected during project construction; however, construction contractors would be required to dispose of construction waste in accordance with federal, state, and local regulations as a requirement of the project construction contract specifications. Solid waste generated at the project location during project operations would be consistent with current generation patterns, which are primarily limited to food and sanitary waste from employees onsite. These activities would not generate solid waste in excess of standards or infrastructure capacity. The impacts would therefore be less than significant.

The proposed project is expected to extend the operational life of the current WPWMA facility; expand the site's capacity to divert materials from landfill disposal and contribute to greenhouse gas emission reductions; and increase the WRSL's permitted capacity to accommodate anticipated long-term growth before the permitted landfill capacity is exhausted in 2058 (CalRecycle 2021). Further, the project is

intended to support the attainment of solid waste-related goals and standards described in Sections 17.2.2 and 17.2.3. As a result, implementation of Plan Concept 1 would not impair the attainment of solid waste reduction goals and this impact would be less than significant.

Plan Concept 2

As described in Chapter 3, Project Description, the primary differences between Plan Concept 1 and Plan Concept 2 are related to where various facilities would be located on the WPWMA's property and when various facilities would be developed. Impacts related to solid waste generation, capacity, and reduction as a result of implementing Plan Concept 2 would be the same as described for Plan Concept 1.

IMPACT 17-5	**Comply with solid waste reduction statutes and regulations**. Implementation of the proposed project would both comply with and support solid waste reduction measures. Therefore, there would be **no impact**.

Plan Concept 1

As discussed under Impact 17-4, the project is intended to both comply with and support the attainment of solid waste-related goals and standards described in Sections 17.2.2 and 17.2.3, including solid waste reduction measures. As a result, implementation of Plan Concept 1 would result in no impact.

Plan Concept 2

As described in Chapter 3, Project Description, the primary differences between Plan Concept 1 and Plan Concept 2 are related to where various facilities would be located on the WPWMA's property and when various facilities would be developed. Impacts related to solid waste reduction as a result of implementing Plan Concept 2 would be the same as described for Plan Concept 1.

IMPACT 17-6	**Result in wasteful, inefficient, or unnecessary consumption of energy resources**. The proposed project will result in increased consumption of energy resources. Because increased energy use is necessary to provide expanded solid waste services to accommodate regional growth and changing regulatory climate, implementation of the project will result in a **less-than-significant impact**.

Plan Concept 1

The proposed project will result in increased consumption of energy resources as detailed in Table 17-3. Although an increase in energy consumption is anticipated, use of energy is necessary to provide expanded solid waste services to the region as population rises. Additionally, the proposed project is expected to implement efficient energy technologies and building concepts as the project is designed and constructed. Estimate basis and assumptions are detailed in the Methodology section of this chapter.

Table 17-3. Sitewide Energy Use for Plan Concept 1 in 2050

Source	Energy Consumption	Units
Facility		
Electricity Use[a]	10,692,900	kWh/year
Onsite Equipment (Diesel)	421,100	gallons/year

Table 17-3. Sitewide Energy Use for Plan Concept 1 in 2050

Source	Energy Consumption	Units
Onsite Equipment (Gasoline)	16,100	gallons/year
Onsite Equipment (Propane)	36,800	gallons/year
Transportation		
Public Vehicles (Diesel)	4,500	gallons/year
Commercial Vehicles (Diesel)	64,500	gallons/year
Internal Operations (Diesel)	2,500	gallons/year
Outbound Recyclables (Diesel)	4,200	gallons/year
Sitewide Employees (Diesel)	0[b]	gallons/year
Public Vehicles (Gasoline)	212,200	gallons/year
Commercial Vehicles (Gasoline)	39,500	gallons/year
Internal Operations (Gasoline)	0[c]	gallons/year
Outbound Recyclables (Gasoline)	50	gallons/year
Sitewide Employees (Gasoline)	109,700	gallons/year
Compatible Manufacturing (project-level analysis)		
Electricity Use	2,535,000	kWh/year
Employees/Vendor Trips (Diesel)	47,300	gallons/year
Employees/Vendor Trips (Gasoline)	253,200	gallons/year
Construction (maximum year)		
Onsite Equipment (Diesel)	213,000	gallons/year
Construction Worker Trips (Gasoline)	11,300	gallons/year
Vendor/Haul Trips (Diesel)	1,300	gallons/year

Notes:

[a] Does not include electricity use for compatible manufacturing areas. See separate line item for compatible manufacturing electricity use.
[b] Assumes site employee personal vehicles use gasoline.
[c] Assumes internal site operations vehicles use diesel.

With respect to the electrical demand for the 2050 organic management operation, the energy estimate includes changes associated with the implementation of ASP composting. It is estimated that there may be notable changes in equipment. In particular, ASP composting may include the installation of electric blowers and other electric processing equipment, introducing a new electrical demand in the proposed project not present during 2018 baseline conditions. This composting technology is planned to be implemented to improve processing efficiency, operational logistics, compost quality, and environmental

impacts. As noted previously, implementation of ASP composting would also result in a reduction in the amount of required material turning currently performed by diesel powered equipment.

In addition to the energy estimates provided in Table 17-1, the proposed project anticipates an increase in LFG generation as the landfill expands. The LFG management system, which currently diverts up to 1,800 scfm of LFG from the flare station, would be expanded with the expansion of the WRSL. The WPWMA can continue using the LFG to produce electricity as a beneficial reuse of the LFG. In addition, a component of Plan Concept 1 includes the possible construction of an LFG-to-compressed natural gas, hydrogen, or other renewable fuels gas facility. With the installation of this facility, the WPWMA could produce and sell vehicle-grade or pipeline-grade compressed fuels developed from LFG or other biogas produced through management of organics. Furthermore, other renewable energy technologies could be developed as part of the complementary and programmatic element that could result in additional renewable energy production from LFG.

Referencing the SAP EIR (Placer County 2019b), with the exception of construction energy consumption and considering the project-level analysis of complementary and programmatic elements, the energy usage estimates for equivalent energy types (electricity, diesel, and gasoline) for the proposed project are on the order of 3 to 5 percent of the energy use calculated for the net SAP area, which includes the WPWMA project location. The proposed project includes an analysis of a representative maximum construction year energy consumption, which if multiplied by 30 years, is on the order of 1 percent of the diesel and gasoline gallons estimated for construction of the net SAP area in the SAP EIR. As mentioned in the Methodology section of this chapter, construction of the proposed project is not expected to be constant across the project period. Thus, comparatively, energy estimates for the proposed project location are less than that calculated in the SAP EIR (Placer County 2019b).

Because the increased energy use is necessary to accommodate solid waste services for regional growth and the changing regulatory climate, and the proposed project provides opportunities for renewable energy production from LFG, implementation of Plan Concept 1 would have a less-than-significant impact.

Plan Concept 2

As described in Chapter 3, Project Description, the primary differences between Plan Concept 1 and Plan Concept 2 are related to where various facilities would be located on the WPWMA's property and when various facilities would be developed. Impacts related to energy consumption as a result of implementing Plan Concept 2 would be the same as described for Plan Concept 1. Table 17-4 presents the primary energy consumption estimate associated with Plan Concept 2. Differences in energy consumption between Plan Concepts 1 and 2 are attributed to facility layouts and anticipated onsite traffic routes.

Table 17-4. Sitewide Energy Use for Plan Concept 2 in 2050

Source	Energy Consumption	Units
Facility		
Electricity Use[a]	10,692,900	kWh/year
Onsite Equipment (Diesel)	421,100	gallons/year
Onsite Equipment (Gasoline)	16,100	gallons/year
Onsite Equipment (Propane)	36,800	gallons/year

Table 17-4. Sitewide Energy Use for Plan Concept 2 in 2050

Source	Energy Consumption	Units
Transportation		
Public Vehicles (Diesel)	4,400	gallons/year
Commercial Vehicles (Diesel)	62,500	gallons/year
Internal Operations (Diesel)	1,700	gallons/year
Outbound Recyclables (Diesel)	4,100	gallons/year
Sitewide Employees (Diesel)	0[b]	gallons/year
Public Vehicles (Gasoline)	205,800	gallons/year
Commercial Vehicles (Gasoline)	38,200	gallons/year
Internal Operations (Gasoline)	0[c]	gallons/year
Outbound Recyclables (Gasoline)	50	gallons/year
Sitewide Employees (Gasoline)	107,400	gallons/year
Compatible Manufacturing (project-level analysis)		
Electricity Use	2,535,000	kWh/year
Employees/Vendor Trips (Diesel)	45,600	gallons/year
Employees/Vendor Trips (Gasoline)	244,500	gallons/year
Construction (maximum year)		
Onsite Equipment (Diesel)	213,000	gallons/year
Construction Worker Trips (Gasoline)	11,300	gallons/year
Vendor/Haul Trips (Diesel)	1,300	gallons/year

Notes:

[a] Does not include electricity use for compatible manufacturing areas. See separate line item for compatible manufacturing electricity use.
[b] Assumes site employee personal vehicles use gasoline.
[c] Assumes internal site operations vehicles use diesel.

IMPACT 17-7	**Conflict with a state or local plan for renewable energy or energy efficiency**. Implementation of the proposed project would support state and local plans regarding renewable energy and energy efficiency and would thus result in **no impact**.

Plan Concept 1

As described under Impact 17-6, implementation of Plan Concept 1 would result in an increase in energy consumption because of the need for expanded solid waste services to accommodate regional growth and regulatory climate change. The proposed project would include use of energy-efficient and renewable

energy technology within the planned solid waste project elements as well as the planned complementary and programmatic elements. The WPWMA facility currently includes an LFG-to-energy plant on the premises; the proposed project would result in increased LFG generation, providing additional opportunities to produce more electricity from LFG or to implement new renewable energy technologies to convert LFG to compressed natural gas or other renewable energy products. Furthermore, there is the potential for the WPWMA to use the renewable energy produced at the facility to power site operations.

Thus, the proposed project would support the Strategies E-12 and E-17 of the Placer County Sustainability Plan, which are to support increases in renewable energy generation and storage systems for existing nonresidential structures (Strategy E-12) and to promote onsite renewable energy generation and energy storage for new small- and medium-sized nonresidential structures (Strategy E-17).

The proposed project will also comply with CALGreen building standards for nonresidential buildings, with plans to manage environmental impacts of site development and implement energy-efficient building concepts. It should be noted that the existing facility and proposed project comply with many green building standards, such as material conservation and resource efficiency with the collocation of the MRF building, C&D area, and other Waste Recovery facilities onsite.

The proposed project is being implemented to further the objectives of the Waste Action Plan (WPWMA 2020b). Compliance with plans for renewable energy and energy efficiency is expected; therefore, implementation of Plan Concept 1 would result in no impact.

Plan Concept 2

As described in Chapter 3, Project Description, the primary differences between Plan Concept 1 and Plan Concept 2 are related to where various facilities would be located on the WPWMA's property and when various facilities would be developed. Impacts related to renewable energy and energy efficiency as a result of implementing Plan Concept 2 would be the same as described for Plan Concept 1.

17.4 References

California Department of Resources Recycling and Recovery (CalRecycle). 2020. *Solid Waste Facility Enforcement.* Accessed October 24, 2020. https://www.calrecycle.ca.gov/swfacilities/enforcement#:~:text=Local%20Enforcement%20Agency%20Partnership&text=CalRecycle%20certifies%20LEAs%20to%20ensure,and%20success%20of%20the%20LEA.

California Department of Resources Recycling and Recovery (CalRecycle). 2021. *SWIS Facility/Site Activity Details: Western Regional Landfill (31-AA-0210)*. Accessed July 1, 2021. https://www2.calrecycle.ca.gov/SolidWaste/SiteActivity/Details/2542?siteID=2273.

City of Lincoln. 2021. *City of Lincoln 2020 Urban Water Management Plan*. June.

City of Roseville. 2020. *Pleasant Grove Wastewater Expansion*. Accessed November 6, 2020. https://www.roseville.ca.us/cms/One.aspx?portalId=7964922&pageId=16723418.

Placer County. 2015. Public Review Draft Existing Conditions Report: Public Services and Utilities. October.

Placer County. 2017. *Sunset Area Water, Wastewater, and Recycled Water Technical Report*. October 19. Prepared by Psomas, Roseville, CA.

Placer County. 2018. Sunset Area Plan/Placer Ranch Specific Plan Draft EIR. December 18. Prepared by Ascent Environmental, Sacramento, CA.

Placer County. 2019a. *Sunset Area Plan*. December.

Placer County. 2019b. *Final Environmental Impact Report for the Sunset Area Plan/Placer Ranch Specific Plan.* State Clearinghouse #2016112012. October. Prepared by Ascent Environmental, Sacramento, CA. October.

Placer County Water Authority (PCWA). 2016. *2015 Urban Water Management Plan*. June 2.

Placer County Water Authority (PCWA). 2017. Senate Bill (SB) 610 Request for the Sunset Area Plan. November 3.

RMC Water and Environment (RMC). 2009. *South Placer Regional Wastewater and Recycled Water Systems Evaluation Updated Final Report*. December.

U. S. Department of Energy. 2021. *www.fueleconomy.gov*. Office of Energy Efficiency and Renewable Energy. Accessed February 12, 2021. https://www.fueleconomy.gov/feg/ws/index.shtml.

United States Environmental Protection Agency (EPA). 2020. Resource Conservation and Recovery Act (RCRA) Overview. Accessed October 24, 2020. https://www.epa.gov/rcra/resource-conservation-and-recovery-act-rcra-overview.

Western Placer Waste Management Authority (WPWMA). 2020a. Energy and vehicle data via Microsoft Excel file from WPWMA.

Western Placer Waste Management Authority (WPWMA). 2020b. *Renewable Placer: Waste Action Plan*. https://renewableplacer.com/.

Western Placer Waste Management Authority (WPWMA). 2021. Personal communication with Keith Smith and Eric Oddo. February 10.

18. Project Alternatives

18.1 Introduction

Section 15126.6(c) of the *California Environmental Quality Act* (CEQA) *Guidelines* require an environmental impact report (EIR) to describe a range of reasonable alternatives to the proposed project, or to the location of the proposed project, which could feasibly attain most of the basic project objectives while also avoiding or substantially lessening any of the significant environmental effects of the proposed project. A "rule of reason" governs the range of alternatives to be evaluated in the EIR and specifies that an EIR should only discuss those alternatives necessary to allow a reasoned choice by decision makers. Of the alternatives considered, an EIR needs to examine in detail only those the lead agency determines could feasibly attain most of the basic objectives of the project.

As defined by CEQA (Section 21061.1), "feasible" means an alternative that is capable of being accomplished in a successful manner within a reasonable period of time, taking into consideration economic, environmental, social, and technological factors. In accordance with CEQA Guidelines Section 15126.6(f)(1), in determining the feasibility of an alternative, the EIR evaluation may consider several factors, including site suitability, economic viability, availability of infrastructure, general plan consistency, regulatory limitations, jurisdictional boundaries, and whether the project applicant can reasonably acquire, control, or otherwise have reasonable access to an alternative facility or proposed alternative site. If an alternative would cause one or more significant effects, over and beyond those associated with the proposed project after mitigation is applied, those significant effects must be discussed, but in less detail than the proposed project's effects.

The proposed project would result in significant and unavoidable impacts on aesthetic resources, air quality, greenhouse gas (GHG) emissions, and transportation. Additionally, the proposed project would result in the loss of sensitive biological resources, including direct and indirect impacts on listed species. The proposed project's impacts on biological resources would be reduced to less-than-significant levels through participation in the Placer County Conservation Program (PCCP)[41] (refer to Chapter 7, Biological Resources, for additional information).

Aesthetics. Implementation of the proposed project would result in significant aesthetics impacts, primarily related to the final maximum elevation of the Western Regional Sanitary Landfill (WRSL). The landfill under the proposed project would be much more prominent in the landscape because of its larger size and height, resulting in greater levels of visual contrast with the surrounding open space and agricultural land uses. In many nearby views, the landfill would grow to become the dominant visual element. Additionally, the generation of offsite litter from vehicles accessing the facility would continue to be significant and unavoidable as the project expands.

Air Quality. Implementation of the proposed project would result in significant air quality impacts. Specifically, the proposed project has the potential to result in impacts related to construction and operational emissions of criteria air pollutants and ozone precursors and odors that remain significant and unavoidable after mitigation.

[41] Federal, state, and local partners held a signing ceremony in Lincoln, California on July 22, 2021, to mark the Western Placer County Habitat Conservation Plan and Natural Community Conservation Plan's (HCP/NCCP) transition into implementation. This signing ceremony marked the final approval of the PCCP.

Biological Resources. Implementation of the proposed project would result in significant impacts to biological resources. Specifically, the proposed project would result in loss and degradation of habitat for special-status wildlife species that rely on vernal pool-type wetlands for at least a portion of their lifecycle, including federally listed vernal pool fairy shrimp and vernal pool tadpole shrimp and western spadefoot, a California species of special concern.

Greenhouse Gas Emissions. Implementation of the proposed project would result in significant impacts related to construction and operational GHG emissions that would remain significant and unavoidable after mitigation. Specifically, annual GHG emissions estimated for the proposed project would exceed the Placer County Air Pollution Control District's (PCAPCD) recommended GHG significance thresholds, including the bright-line threshold of 10,000 metric tons of carbon dioxide equivalent per year.

Transportation. Implementation of the proposed project would result in significant and unavoidable impacts related to transportation. Specifically, the proposed project would result in new daily vehicle travel, which would result in a net increase in vehicle miles traveled (VMT) in excess of the significance threshold.

The potential for project alternatives to reduce significant environmental impacts was taken into consideration in the alternatives selection process with a specific focus on the significant and unavoidable impacts identified previously. Biological resources were also specifically taken into consideration during the alternatives selection process because of the unique vernal pool resources on the project site and the substantial loss of these resources within the State.

The remainder of this chapter presents information used for identifying and evaluating alternatives. The purpose and objectives of the proposed project are restated in Section 18.2. Section 18.3 describes the process used for evaluating potential alternatives. Section 18.4 identifies alternatives considered but eliminated from consideration. Section 18.5 presents the alternatives to the proposed project fully analyzed in this Draft EIR (DEIR). Section 18.6 compares the alternatives, and Section 18.7 discusses the environmentally superior alternative.

18.2 Factors Considered in Identifying Project Alternatives

State CEQA Guidelines Section 15126.6(a) provides guidance regarding what the alternatives analysis should consider. Specifically, an EIR must "describe a range of reasonable alternatives to the project, or to the location of the project, which would feasibly attain most of the basic objectives of the project but would avoid or substantially lessen any of the significant effects of the project, and evaluate the comparative merits of the alternatives." Subsection (b) states the purpose of the alternatives analysis, as follows:

> Because an EIR must identify ways to mitigate or avoid the significant effects that a project may have on the environment (*Public Resources Code* Section 21002.1), the discussion of alternatives shall focus on alternatives to the project or its location which are capable of avoiding or substantially lessening any significant effects of the project, even if these alternatives would impede to some degree the attainment of the project objectives, or would be more costly.

The CEQA Guidelines further require that the alternatives be compared with the proposed project's environmental impacts and that the "no project" alternative be considered (CEQA Guidelines Section 15126.6[d][e]).

In determining what alternatives should be considered in the EIR, it is important to acknowledge the project's objectives, the project's significant effects, and unique project considerations. These factors are crucial in developing alternatives that meet the criteria specified in Section 15126.6(a). Although, as noted previously, EIRs must contain a discussion of "potentially feasible" alternatives, the ultimate determination as to whether an alternative is feasible or infeasible is made by the lead agency's decision-making body; for this EIR, the Western Placer Waste Management Authority (WPWMA) Board is the lead agency. (See *Public Resources Code*, § 21081[a][3].) At the time that it considers taking action on the project, the Board may consider evidence beyond that found in this EIR in addressing such determinations. The Board, for example, may conclude that a particular alternative is infeasible (that is, undesirable) from a policy standpoint, and may reject an alternative on that ground, provided that the Board adopts a finding, supported by substantial evidence, to that effect, and provided that such a finding reflects a "reasonable balancing of the relevant economic, environmental, social, and technological factors." (City of Del Mar v. City of San Diego (1982) 133 Cal.App.3d 401, 417; see also Sequoyah Hills Homeowners Assn. v. City of Oakland (1993) 23 Cal.App.4th 704, 714-716 (court upholds findings rejecting alternatives for not fully satisfying project objectives)).

The purpose and objectives of the proposed project were considered in selecting alternatives for evaluation and comparison in this chapter to determine whether the alternatives could feasibly accomplish most of the project's objectives. For reference purposes, the purposes and objectives of the proposed project are summarized as follows.

The purpose of the Waste Action Plan is to identify the physical and operational changes needed at the WPWMA facility so that the facility can support future waste recovery and waste disposal needs for the rapidly growing communities it serves while complying with an increasingly complex regulatory environment and fluctuating global recyclables markets. The Waste Action Plan was also developed to maintain a stable cost structure for the Participating Agencies, improve operational efficiencies and customer safety, and continue to enhance compatibility between ongoing operations and current and future adjacent land uses.

The WPWMA developed the Waste Action Plan to articulate a long-term vision for optimizing the ongoing solid waste management services provided to the Participating Agencies. The objectives of the Waste Action Plan that would help achieve this vision are described as follows:

- Maintain a stable and relatively predictable cost structure through continued local-government control of solid waste management operations, improve operational efficiencies, and extend the operational life of the current WPWMA facility.
- Expand the site's capacity to divert materials from landfill disposal and reduce greenhouse gas emissions through expanded composting, improved recovery of construction and demolition (C&D) materials, recycling, and public buy-back activities.
- Increase the WRSL's permitted footprint and height to optimize the efficient use of land for waste disposal and provide sufficient waste disposal capacity to accommodate anticipated long-term growth in the Participating Agencies' waste streams.
- Enhance customer safety by improving site access and internal circulation, which would minimize potential conflicts between commercial vehicles and public users.
- Provide the WPWMA with operational flexibility to accommodate an increasingly complex and evolving regulatory environment and conduct operations associated with Waste Action Plan implementation in the most environmentally responsible manner possible.

- Facilitate the siting and development of compatible technologies that would benefit from proximity to the WPWMA.
  - Compatible technologies could include both proven and innovative recycling strategies intended to capitalize on an evolving local recyclable materials market and potentially reduce dependence on foreign markets.
  - Developing compatible technologies could promote state-mandated waste diversion goals, offset costs associated with ongoing solid waste operations, and generate innovative and creative economic opportunities within the County consistent with the Sunset Area Plan's objectives (Placer County 2019).
- Continue to improve compatibility between current and future WPWMA operations and existing and proposed adjacent land uses based on the surrounding area's anticipated transition to a more urban environment.
- Encourage implementation of the Placer County Conservation Program (PCCP) and the integration of environmentally conscious practices into the facility operations.
- Develop the WPWMA's properties in a manner consistent with the goals, policies, and implementation programs identified in the Sunset Area Plan (Placer County 2019).
- Position the WPWMA facility as a hub of innovation that promotes the development of a circular economy in Placer County.

Under CEQA Guidelines Section 15126.6, as noted earlier, the alternatives to be discussed in detail in an EIR should be able to "feasibly attain most of the basic objectives of the project"; for this reason, the objectives described previously provided the framework for defining possible feasible alternatives.

The following identifies the alternatives considered but eliminated from further evaluation and the rationale for determining their infeasibility. Those alternatives that were considered feasible and evaluated in comparison to the proposed project are also identified, followed by a detailed comparative analysis. The comparative analysis specifically identifies whether these alternatives could feasibly accomplish most of the project's objectives and could avoid or substantially lessen one or more of the significant project effects.

For a detailed description of how the plan concepts were developed and how Plan Concept 1 was identified as the preferred project, see Sections 4.1 and 4.2 of Chapter 4, Approach.

Alternatives considered by the WPWMA but eliminated from detailed discussion in this EIR include the following:

- Alternative Location in Placer County
- Landfill Closure and Transfer to Out-of-County Landfill

A qualitative evaluation of these alternatives is provided in Section 18.3.

Alternatives considered by the WPWMA and evaluated in this Alternatives chapter include the following:

- No Project (Alternative A)
- Prioritize Waste Recovery Alternative (Alternative B)
- No Organics Processing Alternative (Alternative C)
- Three-Bin Clean MRF Alternative (Alternative D)

A qualitative evaluation of these alternatives is provided in Section 18.5 and compared with the preferred plan concept in Section 18.6.

18.3 Alternatives Considered but Eliminated

18.3.1 Alternative Location in Placer County

This alternative assumes that the WPWMA would continue to be a regional authority established through a joint exercise of powers agreement between Placer County and the cities of Lincoln, Rocklin, and Roseville to own, operate, and maintain a sanitary landfill and all related improvements. Under the Alternative Location in Placer County Alternative, the WPWMA would relocate all solid waste management activities to a new facility located where it could continue to provide the solid waste management needs of Placer County and the cities of Lincoln, Rocklin, and Roseville, although the exact location of such a facility is unknown and speculative.

Under this alternative, instead of proceeding with the Waste Action Plan at the current location, the WPWMA would search for and identify the location of a replacement facility. It is anticipated that a feasible location would be sought within approximately 20 miles of the existing facility, roughly equivalent in size to the currently owned WPWMA property acreage. This site would require construction of the existing and future solid waste management facilities currently at the site and proposed for the proposed project, including siting and permitting a new Class II or Class III sanitary landfill.

For an alternative location for the proposed project to be considered feasible, the site would have to be suitable for landfill development and meet the detailed siting and design criteria established in *California Code of Regulations* (CCR) Title 27. These criteria would preclude any property that would not meet the Title 27 landfill siting requirements. In general, the State of California siting regulations (which are mostly based on the federal Subtitle D regulations) restrict landfills from locating in areas near runways, within 100-year floodplains, in unstable terrain, in wetlands, or in active fault zones. Additional State of California criteria address site development and feasibility. Site feasibility is further determined by the WPWMA's ability to acquire, control, or otherwise have access to suitable properties.

This alternative assumes that it would take the WPWMA approximately 10 to 15 years to locate, acquire, and permit a new facility and an additional 5 years to finance, construct, and secure an operator for replacement facilities. Therefore, solid waste management operations at a new location could take approximately 15 to 20 years to be realized, at which time, the existing facility would end operations and the WRSL would close. The WRSL would require a minimum of 30 years of post-closure maintenance.

The California statutory and regulatory requirements for development of new landfills embodies a process that results in the planning and permitting for a new landfill easily taking 15 or more years to complete. The history of permitting landfills in California in the last 35 years demonstrates that few are actually approved and permitted, let alone built and operated. In the last 35 years, there have been a handful of new landfills permitted in California on non-tribal lands, such as Potrero Hills Landfill in Solano County (1986); Frank R. Bowerman Landfill in Orange County (1991); Keller Canyon Landfill in Contra Costa County (1992); Mesquite Regional Landfill in Imperial County (1999); and Eagle Mountain Landfill in Riverside County (1999). Of those five, three have been built (Potrero, Bowerman, and Keller Canyon). Mesquite, which had been scheduled to be placed into service to facilitate waste-by-rail from Los Angeles County, is not being developed at this time. The fifth site, Eagle Mountain Landfill, was blocked by litigation after nearly 20 years in the permitting process, and the project is now no longer viable.

The Alternative Location in Placer County Alternative would reduce potentially significant and unavoidable impacts near the WPWMA facility associated with aesthetics, as the WRSL would not achieve the final elevation proposed for the proposed project nor introduce a second landfill mound, as Plan Concept 2 would. However, by the time an alternative location in Placer County was ready to accept waste (up to

20 years), the WRSL would have increased in height to be closer to its currently permitted final elevation, which was determined in a previous EIR prepared for the WPWMA to have significant impacts. This alternative would reduce the significant and unavoidable impacts of the proposed project near the project site caused by offsite litter from vehicles accessing the facility once waste is hauled elsewhere. This alternative would also reduce potentially significant and unavoidable impacts near the site associated with air quality, GHG emissions, and transportation and traffic once the facility is closed. The potentially significant and unavoidable air quality impacts would be reduced by closure of the WRSL and elimination of organic waste management at the facility, but not until an alternative location in Placer County was ready to accept waste, although the WPWMA would fully implement the Site Wide Odor Program (SWOP) described for the proposed project during the intervening time, which would potentially reduce the significant and unavoidable odor impact. The significant impacts at the site associated with biological resources would be reduced by not expanding waste management activities onto the eastern and western properties. However, it is anticipated that impacts to biological resources should be expected at the alternative location in Placer County. Transportation impacts near the site associated with the proposed project would be reduced for the alternative location in Placer County, as traffic to the site would be limited to that allowed under current permits. However, given that any potentially available land of this size would be further removed from population centers and would therefore require additional VMT to the site and also for removal of recovered products from the site, such an alternative is expected to increase overall traffic and transportation impacts because of VMT, including contributing to roadway congestion.

The Alternative Location in Placer County Alternative has been eliminated from consideration for the following reasons:

- The alternative abandons the significant investment in real estate and infrastructure that the existing facility represents.
- The WPWMA's ability to identify and acquire a suitable parcel in an area that would allow them to continue serving the Member Agencies is unknown, complex, and highly subject to external factors.
- The WPWMA would be required to make a significant financial investment in an alternative location while also providing solid waste management services at the current location.
- Relocation of the WPWMA facility from its current location is inconsistent with the goals of the Sunset Area Plan, which include full buildout of the WPWMA property for solid waste management and similar ECO-Industrial uses.
- The alternative does not meet the objectives of the proposed project.

18.3.2 Landfill Closure and Transfer to Out-of-County Landfill

This alternative assumes that the WPWMA would convert the facility to a material recovery facility (MRF) and transfer station, cease composting and other organics management operations as well as C&D processing operations, and facilitate the transfer of solid waste from Placer County to an out-of-county landfill. This alternative also assumes that the WPWMA would remain as a regional authority established through a joint exercise of powers agreement between Placer County and the cities of Lincoln, Rocklin, and Roseville in order to own, operate, and maintain a transfer station at the existing site and provide closure and post-closure maintenance of the WRSL. Under the Landfill Closure and Transfer to Out-of-County Landfill Alternative, the WPWMA would convert the MRF building to a MRF and transfer station. Single-stream mixed-waste MRF waste processing services would continue, as would the ability for existing self-haul or other customers to bring waste to the transfer station. The WPWMA's role in solid waste management at the site would be limited to sorting waste and sending it offsite for processing elsewhere or for disposal at an out-of-county landfill. Under this alternative, each jurisdiction would eventually

(within approximately 3 years) need to arrange for organic waste management and C&D processing through their own facilities, contracts, and collections.

Under this alternative, instead of proceeding with the Waste Action Plan at the current location, the WPWMA would add a transfer station to the existing MRF building. Once the transfer station construction is complete, estimated to take 3 years, municipal solid waste (MSW) remaining after being processed through the MRF building would be transferred to an existing waste disposal facility, assumed to be Recology's Ostrom Road Landfill, which is anticipated to have the capacity to accept MSW from the WPWMA service area. Materials that are recovered after processing mixed waste through the MRF will be sent to market. Once the transfer station is operational, the WPWMA facility would cease disposal and would begin the process of closure of the WRSL. The WRSL would require a minimum of 30 years of post-closure maintenance.

Under this alternative, C&D operations and organic waste management would occur at the site in a limited capacity for approximately 3 years, or until the transfer station facilities are complete. At that time, WPWMA Member Agencies and other jurisdictions would be responsible for managing organic and C&D wastes, and these operations would no longer occur at the WPWMA's facility.

This alternative would reduce potentially significant and unavoidable impacts at the site associated with aesthetics, as the WRSL would not achieve the final elevation proposed for the proposed project nor introduce a second landfill mound, as Plan Concept 2 would. This alternative would potentially reduce significant and unavoidable impacts associated with air quality (odor), and transportation and traffic. The potentially significant and unavoidable odor impacts would be reduced by closure of the WRSL and elimination of organic waste management at the facility, although the WPWMA would fully implement the SWOP described for the proposed project during the intervening time. The significant impacts associated with biological resources would be reduced by not expanding waste management activities onto the eastern and western properties. Transportation impacts near the site associated with the proposed project would be reduced for the Landfill Closure and Transfer to Out-of-County Landfill Alternative, as traffic to the site would be reduced as a result of the reduction of recyclables, compostable materials, C&D waste, and self-haulers to the site. However, the level of waste hauled to an out-of-county location and the needs of the jurisdictions would result in traffic and VMT impacts that would possibly be greater than the proposed project because of decentralized waste disposal and recovery operations.

This alternative has been eliminated from consideration for the following reasons:

- The alternative abandons the significant investment in real estate and infrastructure that the existing facility represents.
- Member Agencies would lose control of rates charged for management of organic and C&D waste and waste disposal.
- The alternative places a significant burden on local jurisdictions to achieve waste diversion mandates and implement their own solid waste management plans and to do this within an expedited timeline.
- Relocation of the WPWMA facility from its current location is inconsistent with the goals of the Sunset Area Plan, which include full buildout of the WPWMA property for solid waste management and similar ECO-Industrial uses.

18.4 Evaluation of Project Alternatives

18.4.1 Alternative A: No Project Alternative

CEQA requires that an EIR consider a No Project Alternative. For this EIR, the No Project Alternative (Alternative A) is continued operation of the WPWMA facility under existing permits, without the Waste Action Plan. Ultimately, this results in phased closing of the WPWMA facility, which would eventually become a MRF and transfer station with limited organics and C&D waste processing. Figure 18-1 illustrates the primary features of this alternative.

Under Alternative A, the WPWMA would continue providing solid waste management services at the current location. Activities allowed under existing permits would continue until the WRSL reached capacity, at which time, the landfill portion of the facility would close. Solid waste management services would be constrained by limiting operation only to the center property and only to existing permit limits. Under Alternative A, there would be no change for how waste is collected and delivered to the site (single-stream mixed waste), and MSW would continue to be delivered to the site and processed through the MRF building accordingly.

The organics management facilities would be limited to the existing capacity. The organics management facilities would not be upgraded under Alternative A to meet current regulatory requirements and would not be expanded to a size adequate to address the organic waste of the WPWMA's Participating Agencies in order to comply with pending regulatory requirements. As the amount of incoming organic waste is projected to exceed the ability of the WPWMA facility to accommodate processing, the remaining organic waste would need to be managed on a jurisdiction-by-jurisdiction basis (i.e., Member Agencies would be given priority). Likewise, the C&D facility would be limited to the existing capacity and would not be upgraded to handle the complete C&D needs of the jurisdictions, with additional C&D material needing to be managed on a jurisdiction-by-jurisdiction basis.

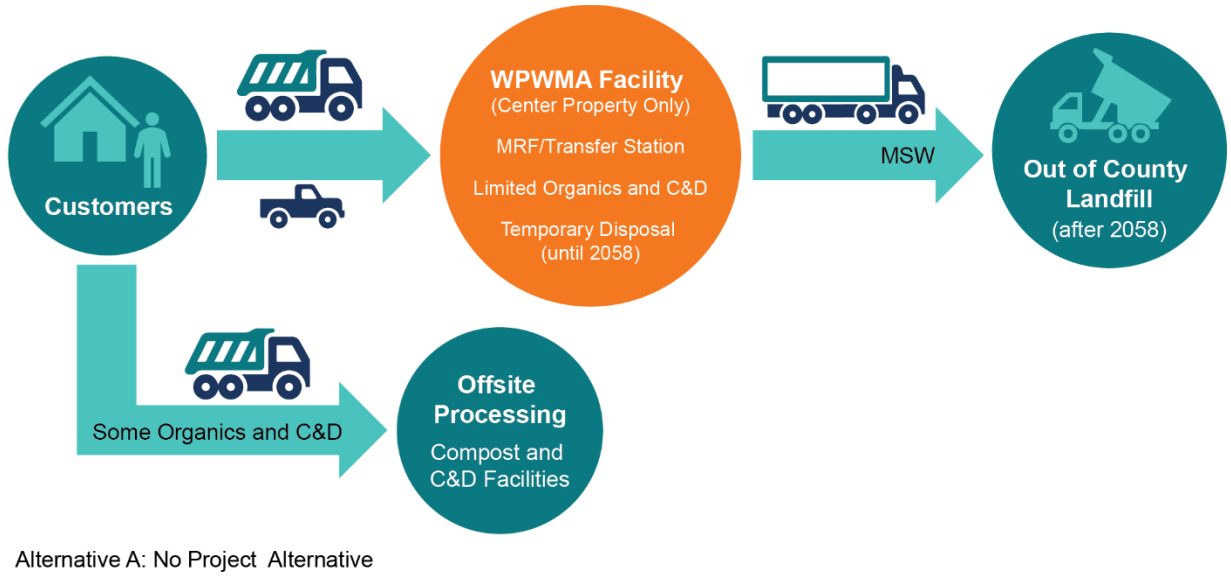

Figure 18-1. Alternative A: No Project Alternative

Similar to how the center property is presently used, a currently permitted landfill disposal area (Module 9) will be dedicated to the existing organics management and C&D areas. The WPWMA estimates that the

remaining landfill capacity under Alternative A would be exhausted by 2058, at which time, the WRSL would close. After closure of the WRSL, MSW would be transferred to a disposal facility, possibly the Recology Ostrom Road Landfill, with the capacity to accept the MSW from the WPWMA service area. The WRSL would require a minimum of 30 years of post-closure maintenance.

Environmental Analysis

In accordance with CEQA, the following qualitative discussion considers the environmental impacts of Alternative A.

Aesthetics.

Similar to the proposed project, facilities associated with Alternative A would be visible from various viewpoints in the project vicinity. Operation of the most visually significant facility, the WRSL, would continue under Alternative A until approximately 2058, at which time, the landfill may have achieved the currently permitted maximum height of 295 feet. This height is less than the maximum height of 325 feet proposed as part of the proposed project, but still significant, as determined in WPWMA's 2000 Supplemental EIR (WPWMA, Supplemental Environmental Impact Report for the Western Regional Sanitary Landfill, 2000). Alternative A would not involve expansion of the WRSL onto either the eastern property (Plan Concept 1) or the western property (Plan Concept 2). As a result of the reduced height and reduced landfill footprint associated with Alternative A, overall visual impacts of Alternative A would be less than the proposed project but would remain significant.

Similar to the proposed project, waste would continue to be hauled to the facility during the project period. Accordingly, Alternative A would have the same potential as the proposed project for significant and unavoidable impacts associated with offsite litter from haul vehicles near the site.

Air Quality.

Under Alternative A, operations at the WPWMA would continue as under existing conditions. Inbound material quantities and traffic would increase slightly up to existing permit limits and then remain stable, resulting in slightly greater air emissions than the baseline but less than the proposed project. Composting as part of the organics management operation would continue but not expand significantly. The SWOP would be fully implemented, but the potential for odor impacts would continue to be significant and unavoidable. As the WPWMA facility became unable to take increasing quantities of waste in response to population growth, additional waste management operations would be required on a jurisdiction-by-jurisdiction basis. It is anticipated that these operations, at locations other than the WPWMA facility, would produce similar air emissions and impacts as wastes are processed and disposed.

Biological Resources.

The significant impacts at the site associated with biological resources would be eliminated by not expanding waste management activities onto the eastern and western properties. However, it is anticipated that impacts to biological resources could be expected at other locations where solid waste would be managed, such as new facilities required by the jurisdictions to manage organic and C&D waste materials.

Cultural Resources.

The potential for impacts to cultural resources at the site would be reduced under Alternative A, as site operations would not expand beyond the center property. However, impacts under the proposed project

would be less than significant after mitigation. The potential for unanticipated cultural resources to be found during construction could be expected at other locations where solid waste would be managed, such as new facilities required by the jurisdictions to manage organic and C&D waste materials.

Geology, Soils, and Paleontology.

The potential for impacts to geology, soils, and paleontology at the site would be reduced under Alternative A, as site operations would not expand beyond the center property. However, impacts to geology, soils, and paleontology under the proposed project would be less than significant after mitigation. The potential for impacts to geology, soils, and paleontology during construction could be expected at other locations where solid waste would be managed, such as new facilities required by the jurisdictions to manage organic and C&D waste materials.

Greenhouse Gas Emissions and Climate Change.

The potentially significant and unavoidable impacts at the site associated with construction and operational GHG emissions could be reduced under Alternative A without construction of the proposed project, but operations at the WPWMA would continue as under existing conditions. As the WPWMA facility became unable to take increasing quantities of waste in response to population growth, additional waste management operations would be required on a jurisdiction-by-jurisdiction basis. It is anticipated that these operations, at locations other than the WPWMA facility, would produce similar GHG emissions and impacts as wastes are processed and disposed, and, based on possible transport distances, could exceed the amount calculated for the proposed project.

Hazards and Hazardous Materials and Wildfire.

The potential for impacts related to hazards and hazardous materials and wildfire under Alternative A would be similar to the proposed project, as the measures the WPWMA takes currently to avoid impacts would occur regardless of the proposed project.

Hydrology and Water Quality.

The potential for impacts to hydrology at the site under Alternative A would be comparable to the proposed project, as appropriate site design and implementation of best management practices (BMPs) during construction and operation result in less-than-significant impacts. As Alternative A does not include excavation and relocation of solid waste placed in a landfill cell with a pre-Subtitle D liner, it would not provide the environmental benefit to water quality anticipated by removing the solid waste currently in place and redisposing of it in a Subtitle D-lined cell.

Land Use and Planning.

Similar to the proposed project, Alternative A would be consistent and nonconflicting with applicable local plans or policies, including the general plan, specific plan, zoning ordinance, or habitat conservation plan. Alternative A would be consistent with the existing land uses that have been occurring at the site. However, Alternative A would not develop the site in a manner consistent with the land use and zoning envisioned in the Sunset Area Plan, which identified industrial uses on all three of the WPWMA's properties, consistent with the site's ECO zoning.

Noise.

The potential noise impacts of Alternative A would be less than the proposed project because fewer pieces of onsite equipment would be needed and because waste management operations and complementary and programmatic elements would not be expanded onto the western and eastern properties. Landfill construction associated with Alternative A would result in a temporary direct increase in ambient noise levels around the area. However, estimated construction noise levels at existing surrounding sensitive land uses would be less than the statutory requirements of the County, as was determined for the proposed project. The operation-related noise at existing noise-sensitive areas would also be expected to be less than the statutory requirements. Potential noise impacts associated with Alternative A would be less than significant.

Public Services.

The potential public service impacts of Alternative A would be similar to but less than the proposed project. Operations at the site would increase slightly under Alternative A, but less than under the proposed project. Existing agreements related to fire protection, law enforcement, and road maintenance between the WPWMA and Placer County would continue.

Transportation.

Under Alternative A, operations at the WPWMA would continue as under existing conditions. Inbound material quantities and traffic would increase slightly up to existing permit limits and then remain stable, resulting in slightly greater traffic volumes than the baseline, but less than the proposed project. As the WPWMA facility becomes unable to take increasing quantities of waste in response to population growth, additional offsite waste management operations would be required on a jurisdiction-by-jurisdiction basis. It is anticipated that these operations, at locations other than the WPWMA facility, would produce traffic in amounts proportional to the amount of waste being processed, up to the amount assumed for the proposed project.

Utilities and Energy.

Alternative A would operate using similar infrastructure as the proposed project, including water, wastewater, and electrical infrastructure, although the increased need for water, wastewater, and electricity anticipated for the proposed project would likely be less under Alternative A. Additionally, new water and wastewater infrastructure necessary for the proposed project might not be required for Alternative A.

Alternative A (No Project Alternative) Summary

Alternative A is a continuation of the existing operations under existing permits at the WPWMA facility until closure, without implementation of the Waste Action Plan.

Alternative A would avoid or substantially lessen one or more potentially significant environmental impacts of the proposed project, described as follows:

Aesthetics. Alternative A would reduce the potential for significant visual impacts associated with the proposed project near the WPWMA facility by not increasing the overall permitted height of the WRSL from the currently permitted height and by avoiding two landfill mounds as in Plan Concept 2. However, the currently permitted height, as determined in the previous EIR prepared for the WRSL, would continue to represent a significant and unavoidable aesthetic impact. This alternative would have the same

potential as the proposed project for significant and unavoidable impacts associated with offsite litter from haul vehicles near the site.

Air Quality. Alternative A would not reduce the potential for significant air quality impacts related to odor near the WPWMA facility but could reduce the overall duration of these impacts. Waste would increase up to permit limits and then level off. The SWOP would be fully implemented at the site, similar to the proposed project. However, while air quality impacts near the site would be reduced under Alternative A, it is assumed that additional air emissions would be produced wherever the solid waste that cannot be managed at the site is taken for processing.

Biological Resources. Alternative A would significantly reduce impacts to biological resources at the site, as the alternative would use neither the eastern property nor the northern half of the western property, where the majority of sensitive resources would be affected by the proposed project. There is a potential for impacts to biological resources at alternate locations where additional waste management activities would need to occur to replace those that could not expand at the WPWMA facility, but the severity of those impacts is unknown.

Greenhouse Gas Emissions and Climate Change. Alternative A would reduce GHG emissions associated with the proposed project by shortening the operational life of the WRSL. GHG emissions could potentially increase because the facility would not expand management of organic wastes similar to the proposed project.

Transportation. Alternative A would reduce the potential for significant transportation impacts associated with the proposed project. Waste and associated traffic would increase up to permit limits and then level off. However, while traffic impacts near the site associated with the proposed project would be reduced under Alternative A, it is assumed that additional traffic impacts would be produced near to wherever the solid waste that cannot be managed at the site is taken for processing.

The ability of Alternative A to accomplish the objectives of the proposed project is illustrated in Table 18-1.

Table 18-1. Ability of Alternative A (No Project) to Meet Project Objectives

Project Objective	Project Objective Met by Alternative A?
Maintain a stable and relatively predictable cost structure through continued local-government control of solid waste management operations, improve operational efficiencies, and extend the operational life of the current WPWMA facility.	No
Expand the site's capacity to divert materials from landfill disposal and contribute to greenhouse gas emission reductions through expanded composting, improved recovery of C&D materials, recycling, and public buy-back activities.	No
Increase the WRSL's permitted footprint and height to optimize the efficient use of land for waste disposal and provide sufficient waste disposal capacity to accommodate anticipated long-term growth in the Participating Agencies' waste streams.	No
Enhance customer safety by improving site access and internal circulation, which would minimize potential conflicts between commercial vehicles and public users.	No
Provide the WPWMA with operational flexibility to accommodate an increasingly complex and evolving regulatory environment and conduct operations associated with Waste Action Plan implementation in the most environmentally responsible manner possible.	No

Table 18-1. Ability of Alternative A (No Project) to Meet Project Objectives

Project Objective	Project Objective Met by Alternative A?
Facilitate the siting and development of compatible technologies that would benefit from proximity to the WPWMA.	No
Continue to improve compatibility between current and future WPWMA operations and existing and proposed adjacent land uses based on the surrounding area's anticipated transition to a more urban environment.	No
Encourage implementation of the PCCP and the integration of environmentally conscious practices into the facility operations.	No
Develop the WPWMA's properties in a manner consistent with the goals, policies, and implementation programs identified in the Sunset Area Plan (Placer County 2019).	No
Position the WPWMA facility as a hub of innovation that promotes the development of a circular economy in Placer County.	No

18.4.2 Alternative B: Prioritize Waste Recovery

The Prioritize Waste Recovery Alternative (Alternative B) is similar to Plan Concept 2 of the proposed project, in that it concentrates waste recovery activities on the center property. However, Alternative B eliminates expansion of the WRSL onto the eastern or western properties and adds complementary and programmatic elements on the western property only. No activity would occur on the eastern property or the northern portion of the western property. The primary features of this alternative are shown in Figure 18-2.

Figure 18-2. Alternative B: Prioritize Waste Recovery

Under Alternative B, the waste relocation of the unlined area of the landfill that is part of the proposed project would occur within the first 2 years after project approval. The relocation of waste would allow for expansion of the public waste drop-off area, organics management operation, and C&D operation to expand on the northern half of the center property. Waste disposal within the WRSL would be limited to the southern portion of the center property.

Under Alternative B, the waste recovery portions of the Waste Action Plan could be implemented. The public waste drop-off area, organics management area, and C&D facilities would be sized to accommodate current and future regulatory requirements and would be potentially adequate to address the organic waste management needs of the WPWMA's Participating Agencies. Similarly, the C&D facility would be upgraded to handle the complete C&D needs of the jurisdictions. Alternative B would provide space for organics management and C&D operations roughly equal to Plan Concept 2.

Because Alternative B prioritizes waste recovery activities over waste disposal activities, the WRSL is reduced in size from the proposed project and from the currently permitted landfill. Consequently, the WRSL capacity would be exhausted in approximately 2041, and the facility would transition to a MRF and transfer station. Upon completion of transfer station construction, MSW remaining after being processed through the MRF building would be transferred to an existing waste disposal facility, assumed to be Recology's Ostrom Road Landfill, which is anticipated to have the capacity to accept MSW from the WPWMA's service area. The WRSL would require a minimum of 30 years of post-closure maintenance.

Alternative B reserves space for complementary and programmatic activities on the western property, similar to the proposed project. The western property provides ample area for the 1.9 million square feet of industrial uses of activities that complement solid waste management included in the proposed project.

Environmental Analysis

In accordance with CEQA, the following qualitative discussion considers the environmental impacts of Alternative B.

Aesthetics.

Similar to the proposed project, facilities associated with Alternative B would be visible from various viewpoints in the project vicinity. Operation of the most visually significant facility, the WRSL, would continue under Alternative B until approximately 2041, at which time, the landfill would be at a final elevation greater than it is currently, but likely less than the currently permitted maximum height of 295 feet. Alternative B would not involve expansion of the WRSL onto either the eastern property (Plan Concept 1) or the western property (Plan Concept 2). As a result of the reduced height and reduced landfill footprint associated with Alternative B, overall visual impacts of Alternative B would be less than the proposed project.

Similar to the proposed project, waste would continue to be hauled to the facility. Accordingly, Alternative B would have the same potential as the proposed project for significant and unavoidable impacts associated with offsite litter from haul vehicles near the site.

Air Quality.

Under Alternative B, waste recovery operations at the WPWMA would be similar to Plan Concept 2 of the proposed project, particularly relative to activity on the center property. Inbound material quantities and traffic would increase similarly to the proposed project until the waste disposal capacity of the WRSL is reached in approximately 2041. Air emissions, including odor emissions, would be similar under Alternative B to the proposed project until the WRSL closes. Composting as part of the organics management operation would occur on the center property similarly to Plan Concept 2, and the SWOP would be fully implemented. When the WRSL closes, air emissions associated with waste disposal would be experienced at a different site, assumed to be Recology's Ostrom Road Landfill.

Biological Resources.

Alternative B would significantly reduce impacts to biological resources at the site, because the alternative would use neither the eastern property nor the northern half of the western property where the majority of sensitive resources would be affected by the proposed project. There is a potential for impacts to biological resources at alternate locations where additional waste management activities would need to occur to replace those that could not expand at the WPWMA facility, but the severity of those impacts is unknown.

Cultural Resources.

The potential for impacts to cultural resources at the site would be reduced under Alternative B, as site operations would not expand onto the eastern property or the northern portion of the western property. However, impacts under both Alternative B and the proposed project would be less than significant after mitigation.

Geology, Soils, and Paleontology.

Alternative B impacts associated with geology, soils, and paleontology would be similar to the preferred project, but potentially reduced, as development would not occur on the eastern property or the northern portion of the western property.

Greenhouse Gas Emissions and Climate Change.

GHG emissions would be similar under Alternative B to the proposed project until the WRSL closes. Composting as part of the organics management operation would occur on the center property similarly to Plan Concept 2. When the WRSL closes, waste disposal operations would be relocated to a different site, assumed to be Recology's Ostrom Road Landfill. It is anticipated that these relocated operations would produce similar GHG emissions and impacts as wastes are processed and disposed.

Hazards and Hazardous Materials and Wildfire.

Alternative B impacts associated with hazards and hazardous materials and wildfire would be similar to the preferred project, but potentially reduced, as development would not occur on the eastern property or the northern portion of the western property.

Hydrology and Water Quality.

The potential for impacts to hydrology at the site under Alternative B would be comparable to the proposed project, as appropriate site design and implementation of BMPs during construction and operation would result in less-than-significant impacts. Alternative B provides the same environmental benefit to water quality anticipated for the proposed project by removing the solid waste currently in place in a pre-Subtitle D-lined area and redisposing of it in a Subtitle D-lined cell.

Land Use and Planning.

Similar to the proposed project, Alternative B would be consistent and nonconflicting with applicable local plans or policies, including the general plan, specific plan, zoning ordinance, or habitat conservation plan. Alternative B would be consistent with the existing land uses that have been occurring at the site. However, Alternative B would not fully develop the site in a manner consistent with the land use and zoning envisioned in the Sunset Area Plan, which identified industrial uses on all three of the WPWMA's properties, consistent with the site's ECO zoning.

Noise.

The potential noise impacts of Alternative B would be similar to but less than the proposed project, because fewer pieces of onsite equipment would be needed and because waste management operations would not be expanded onto the western and eastern properties. However, up to 1.9 million square feet of complementary and programmatic activities could occur on the western property, similar to the proposed project. Construction associated with Alternative B would result in a temporary direct increase in ambient

noise levels around the area associated with development on the central and western properties. However, estimated construction noise levels at existing surrounding sensitive land uses would be less than the statutory requirements of the County, as was determined for the proposed project. The operation-related noise at existing noise-sensitive areas would also be expected to be less than the statutory requirements.

Public Services.

The potential public services impacts of Alternative B would be similar to the proposed project. Existing agreements related to fire protection, law enforcement, and road maintenance between the WPWMA and Placer County would continue and be revised or expanded under Alternative B as needed, similar to the proposed project.

Transportation.

Inbound material quantities and associated traffic would increase similarly to the proposed project, until the waste disposal capacity of the WRSL is reached in 2041. When the WRSL closes, traffic associated with waste disposal would be relocated to a different site, assumed to be Recology's Ostrom Road Landfill, which would be anticipated to increase traffic volumes on roads leading to the Recology facility, as well as adding VMT by waste vehicles traveling farther distances to deliver waste material.

Utilities and Energy.

The potential utilities and energy impacts of Alternative B would be similar to the proposed project through 2041, when the WRSL would close, after which time, the utilities and energy impacts of Alternative B would be reduced compared with the proposed project. The potential energy impacts for Alternative B would be similar to but less than the proposed project, because less equipment would be required to operate the composting facility.

Alternative B (Prioritize Waste Recovery) Summary

Alternative B concentrates waste recovery operations on the center property, restricts landfill capacity, and adds complementary and programmatic elements on the southern portion of the western property.

Alternative B would avoid or substantially lessen one or more potentially significant environmental impacts of the proposed project, described as follows.

Aesthetics. Alternative B would reduce the potential for significant visual impacts associated with the proposed project near the WPWMA facility by not increasing the overall permitted height of the WRSL from the currently permitted height and by avoiding two landfill mounds as in Plan Concept 2.

Biological Resources. Alternative B would significantly reduce impacts to biological resources at the site, as the alternative would use neither the eastern property nor the northern half of the western property, where the majority of habitat for special-status wildlife species that rely on vernal pool-type wetlands would be affected by the proposed project.

Greenhouse Gas Emissions and Climate Change. Alternative B would reduce GHG emissions associated with the proposed project by shortening the operational life of the WRSL.

The ability of Alternative B to accomplish the objectives of the proposed project is illustrated in Table 18-2.

Table 18-2. Ability of Alternative B (Prioritize Waste Recovery) to Meet Project Objectives

Project Objective	Project Objective Met by Alternative B?
Maintain a stable and relatively predictable cost structure through continued local-government control of solid waste management operations, improve operational efficiencies, and extend the operational life of the current WPWMA facility.	Partially
Expand the site's capacity to divert materials from landfill disposal and contribute to greenhouse gas emission reductions through expanded composting, improved recovery of C&D materials, recycling, and public buy-back activities.	Partially
Increase the WRSL's permitted footprint and height to optimize the efficient use of land for waste disposal and provide sufficient waste disposal capacity to accommodate anticipated long-term growth in the Participating Agencies' waste streams.	No
Enhance customer safety by improving site access and internal circulation, which would minimize potential conflicts between commercial vehicles and public users.	Yes
Provide the WPWMA with operational flexibility to accommodate an increasingly complex and evolving regulatory environment and conduct operations associated with Waste Action Plan implementation in the most environmentally responsible manner possible.	Partially
Facilitate the siting and development of compatible technologies that would benefit from proximity to the WPWMA.	Yes
Continue to improve compatibility between current and future WPWMA operations and existing and proposed adjacent land uses based on the surrounding area's anticipated transition to a more urban environment.	Partially
Encourage implementation of the PCCP and the integration of environmentally conscious practices into the facility operations.	Partially
Develop the WPWMA's properties in a manner consistent with the goals, policies, and implementation programs identified in the Sunset Area Plan (Placer County 2019).	Partially
Position the WPWMA facility as a hub of innovation that promotes the development of a circular economy in Placer County.	Partially

18.4.3 Alternative C: No Organics Processing

The No Organics Processing Alternative (Alternative C) is similar to Plan Concept 1 of the proposed project but excludes processing of organic waste. Like Plan Concept 1, Alternative C uses all of the property available to WPWMA. The WRSL would be expanded onto the eastern property, creating a single landfill mound with disposal capacity until approximately 2101. The public waste drop-off area would be relocated to the western property, with a new entrance to the western property at the intersection of Athens Avenue and Fiddyment Road. On the center property, the waste relocation and excavation would be expected to occur over time, the C&D facility would be expanded, and other facilities would be expanded or redesigned similar to the proposed project. Figure 18-3 presents the features of this alternative.

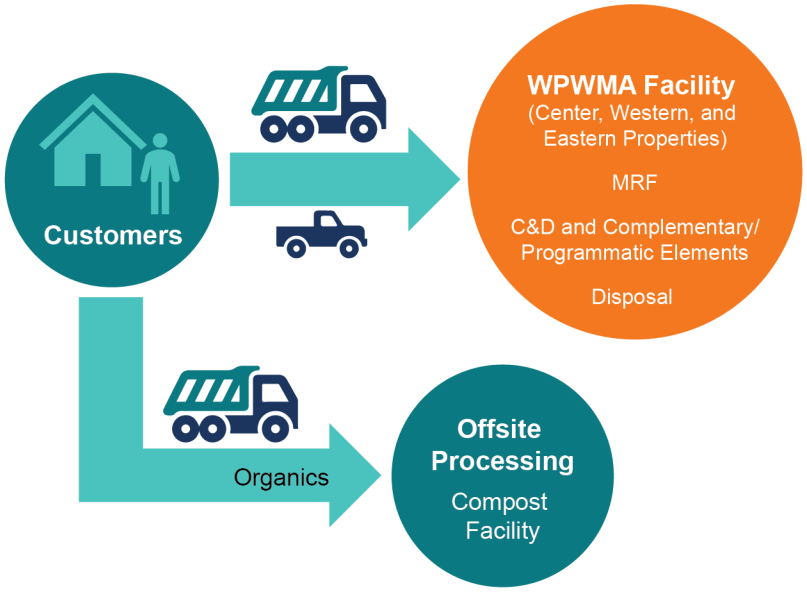

Figure 18-3. Alternative C: No Organics Processing

Under Alternative C, the northern and southern parts of the western property would continue to be available for the complementary and programmatic elements – industrial uses that complement solid waste management activities. These parts of the western property provide ample area for the 1.9 million square feet of industrial uses of activities that complement solid waste management included in the proposed project. However, consideration of potential future industrial uses on the project site would be limited to those that do not contemplate management of organic wastes.

Alternative C would allow the WPWMA to provide long-term disposal capacity through expansion of the WRSL. This alternative would not allow the WPWMA to address the diversion and onsite processing of organic material, nor would it allow the WPWMA to provide services directly to the Participating Agencies to comply with SB 1383. As such, the management of organic waste would be necessary on a jurisdiction-by-jurisdiction basis. Alternative C would allow the WPWMA to comply with regulations associated with C&D waste. The WPWMA's ability to contribute to increased recycling rates and maintain local control of solid waste management activities would be limited.

Alternative C would provide long-term recycling capacity, enhance compatibility of waste recovery and waste disposal operations, and provide opportunities for innovation, although those opportunities would be limited compared with the proposed project, as Alternative C does not include processing of organic waste.

Alternative C (No Organics Processing) Environmental Analysis

In accordance with CEQA, the following qualitative discussion considers the environmental impacts of Alternative C.

Aesthetics.

Similar to the proposed project, facilities associated with Alternative C would be visible from various viewpoints in the project vicinity. Operation of the most visually significant facility, the WRSL, would be the same for Alternative C as for Plan Concept 1 of the proposed project. Similar to the proposed project, aesthetics impacts for Alternative C would be significant and unavoidable.

Similar to the proposed project, waste would continue to be hauled to the facility under Alternative C. Accordingly, Alternative C would have the same potential as the proposed project for significant and unavoidable impacts associated with offsite litter from haul vehicles near the site.

Air Quality.

Similar to the proposed project, Alternative C uses all of the property available to the WPWMA and proposes all the same uses except for management of organic waste. By removing the processing of organic waste from the WPWMA site, the odor-producing aspects of that facility would be eliminated. The SWOP would be fully implemented under Alternative C, although the portion of the SWOP applying to organics management would no longer be applicable. The potential for Alternative C to produce offsite odors resulting from the WRSL, C&D waste management, or public area drop-off would remain, but Alternative C is likely to result in a significantly reduced potential for offsite odors. Similar to the proposed project, the construction and operational emissions of criteria air pollutants and ozone precursors would remain significant and unavoidable.

Biological Resources.

The potential for impacts to biological resources from Alternative C would be the same as those identified for the proposed project.

Cultural Resources.

The potential for impacts to cultural and tribal resources from Alternative C would be the same as those identified for the proposed project.

Geology, Soils, and Paleontology.

The potential for impacts to geology, soils, and paleontology from Alternative C would be the same as those identified for the proposed project.

Greenhouse Gas Emissions and Climate Change.

Similar to the proposed project, Alternative C uses all of the property available to the WPWMA and proposes all the same uses except for management of organic waste. By removing the processing of organic waste from the WPWMA site, the generation of GHG emissions from this organic waste processing would no longer occur at the site. However, these organic wastes would continue to generate GHG emissions wherever they are processed. GHG emissions associated with the construction and operation of this alternative would remain significant and unavoidable.

Hazards and Hazardous Materials and Wildfire.

The potential for impacts related to hazards and hazardous materials and wildfire from Alternative C would be the same as those identified for the proposed project.

Hydrology and Water Quality.

Alternative C proposes all the same uses of the proposed project, including excavation and relocation of waste placed in a pre-Subtitle D cell, with the exception of management of organic waste. The potential for impacts related to hydrology and water quality from Alternative C would be the same as those identified for the proposed project.

Land Use and Planning.

Similar to the proposed project, Alternative C would be consistent and nonconflicting with applicable local plans or policies, including the general plan, specific plan, zoning ordinance, or habitat conservation plan. Alternative C would be consistent with the existing land uses that have been occurring at the site and would largely develop the site in a manner consistent with the land use and zoning envisioned in the Sunset Aera Plan, which identified industrial uses on all three of the WPWMA's properties, consistent with the site's ECO zoning.

Noise.

The potential for impacts related to noise from Alternative C would be similar to those identified for the proposed project but could be slightly reduced because the noise from equipment associated with organic waste management would be eliminated.

Public Services.

The potential for impacts related to public services from Alternative C would be the same as those identified for the proposed project.

Transportation.

Alternative C proposes all the same uses of the proposed project except for management of organic wastes. Consequently, the amount of waste and associated vehicles arriving at the WPWMA facility might be reduced under Alternative C compared with the proposed project, which would result in fewer vehicles on the roadways adjacent to the site and fewer VMT for Alternative C. However, it is anticipated that an equivalent or greater amount of traffic would occur within the WPWMA's service area under Alternative C, as the management of organic wastes transitions from being managed at a single site to a jurisdiction-by-jurisdiction basis, and collection and transfer programs would adjust accordingly.

Utilities and Energy.

The potential for impacts related to utilities and energy from Alternative C would be similar to those identified for the proposed project. As the management of organic wastes at the site would be eliminated under Alternative C, less water and electricity would be required compared with the proposed project. However, it is anticipated that equivalent water and electricity would be required to manage organic wastes generated within the WPWMA's service area wherever they occur.

Alternative C (No Organics Processing) Summary

Alternative C is essentially Plan Concept 1 of the proposed project without management of organic waste at the WPWMA facility.

Alternative C would avoid or substantially lessen one or more potentially significant environmental impacts of the proposed project, described as follows:

Air Quality and Odor. Alternative C would substantially reduce the potential for offsite odor impacts as a result of eliminating the management of organic waste.

The ability of Alternative C to accomplish the objectives of the proposed project is illustrated in Table 18-3.

Table 18-3. Alternative C (No Organics Processing) Ability to Meet Project Objectives

Project Objective	Project Objective Met by Alternative C?
Maintain a stable and relatively predictable cost structure through continued local-government control of solid waste management operations, improve operational efficiencies, and extend the operational life of the current WPWMA facility.	Partially
Expand the site's capacity to divert materials from landfill disposal and contribute to greenhouse gas emission reductions through expanded composting, improved recovery of C&D materials, recycling, and public buy-back activities.	Partially
Increase the WRSL's permitted footprint and height to optimize the efficient use of land for waste disposal and provide sufficient waste disposal capacity to accommodate anticipated long-term growth in the Participating Agencies' waste streams.	Yes
Enhance customer safety by improving site access and internal circulation, which would minimize potential conflicts between commercial vehicles and public users.	Yes
Provide the WPWMA with operational flexibility to accommodate an increasingly complex and evolving regulatory environment and conduct operations associated with Waste Action Plan implementation in the most environmentally responsible manner possible.	Partially
Facilitate the siting and development of compatible technologies that would benefit from proximity to the WPWMA.	Partially
Continue to improve compatibility between current and future WPWMA operations and existing and proposed adjacent land uses based on the surrounding area's anticipated transition to a more urban environment.	Yes
Encourage implementation of the PCCP and the integration of environmentally conscious practices into the facility operations.	Yes
Develop the WPWMA's properties in a manner consistent with the goals, policies, and implementation programs identified in the Sunset Area Plan (Placer County 2019).	Yes
Position the WPWMA facility as a hub of innovation that promotes the development of a circular economy in Placer County.	Partially

18.4.4 Alternative D: Three-Bin Clean MRF Alternative

The Three-Bin Clean MRF Alternative (Alternative D) is similar to Alternative A (No Project), in that solid waste management activities would occur only on the center property. However, the Clean MRF Alternative makes several distinct changes regarding solid waste management. For the Clean MRF Alternative, the current single-stream mixed-waste system for waste collection would convert to a three-bin system that would require each Participating Agency and their designated waste haulers to comply

accordingly. Correspondingly, the existing "dirty" MRF (one that sorts incoming mixed municipal waste) would be converted to a "clean" MRF, one that only sorts source-separated mixed recyclables (no mixed waste, green waste, or food waste). Because there would be no mixed-waste processing, the waste bin (referred to as a black bin) of the three-bin system would be delivered straight to the WRSL for disposal. Consequently, once black bin waste material is received onsite, there would be no opportunity for removing organics or other recyclable materials from that part of the waste stream. The primary features of Alternative D are illustrated on Figure 18-4.

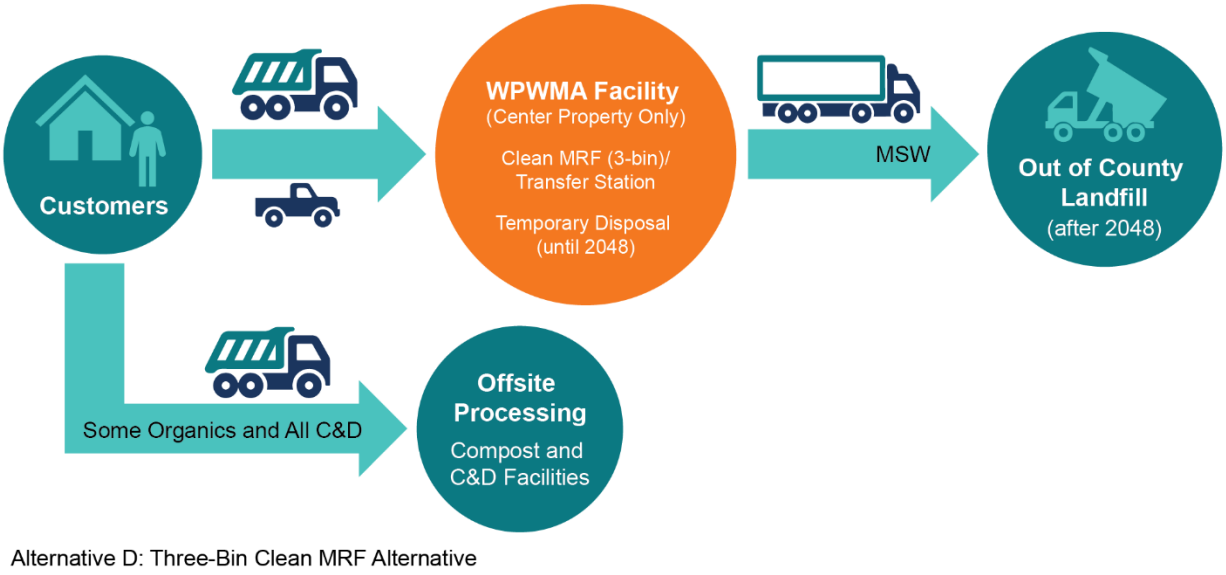

Figure 18-4. Alternative D: Three-Bin Clean MRF Alternative

The existing area of the site designated for future Module 9 of the WRSL that is currently used for Waste Recovery operations would continue to be used in this manner, restricting long-term waste disposal capacity development. No waste excavation and relocation of the pre-Subtitle D landfill would occur.

Because Alternative D prioritizes a range of solid waste management activities occurring on the center property, the WRSL would be reduced in size from the proposed project and from the currently permitted landfill. Consequently, the WRSL capacity would be exhausted in approximately 2048, and the facility would close for disposal at that time, and transition to a MRF and transfer station. Once the transfer station construction is complete, MSW remaining after being processed through the MRF building and MSW that was previously sent directly to the WRSL would be transferred to another waste disposal facility, assumed to be Recology's Ostrom Road Landfill, which is anticipated to have the capacity to accept the MSW from the WPWMA service area. The WRSL would require a minimum of 30 years of post-closure care.

In order to make room on the center property for management of organic waste, the C&D operation would be eliminated under Alternative D. Aerated static-pile composting, as described for the proposed project, is the anticipated form of organics waste management under Alternative D. Because the C&D operation would be discontinued, management of C&D material would be handled on a jurisdiction-by-jurisdiction basis. Self-haul would continue to be accepted for MSW and organic material; there would be no significant changes to the current operation of the public waste drop-off area.

Waste management operations would not be expanded to either the eastern or western properties. Accordingly, only those complementary and programmatic elements that would fit onto the center property would be accommodated.

Alternative D (Three-Bin Clean MRF) Environmental Analysis

In accordance with CEQA, the following qualitative discussion considers the environmental impacts of Alternative D (Three-Bin Clean MRF).

Aesthetics.

Similar to the proposed project, facilities associated with Alternative D would be visible from various viewpoints in the project vicinity. Operation of the most visually significant facility, the WRSL, would continue under Alternative D until approximately 2048, at which time, the landfill would be at a final elevation greater than it is currently, but it is anticipated to be less than the currently permitted maximum height of 295 feet. Alternative D would not involve expansion of the WRSL onto either the eastern property (Plan Concept 1) or the western property (Plan Concept 2). As a result of the reduced height and reduced landfill footprint associated with Alternative D, overall visual impacts of Alternative D would be less than the proposed project.

Similar to the proposed project, waste would continue to be hauled to the facility during the project period. Accordingly, Alternative D would have a similar potential as the proposed project for significant and unavoidable impacts associated with offsite litter from haul vehicles near the site.

Air Quality.

Under Alternative D, waste recovery and waste disposal operations at the WPWMA would be similar to the proposed project but limited to the center property. Inbound material quantities and traffic would increase similar to the proposed project until the waste disposal capacity of the WRSL is reached in 2048. The C&D operation would be eliminated, but the organics management operation would expand as described for the proposed project. Air emissions, including offsite odor emissions, under Alternative D would be similar to but potentially less than the proposed project until the WRSL closes. The SWOP would be fully implemented. When the WRSL closes, air emissions associated with waste disposal would be relocated to a different site, assumed to be Recology's Ostrom Road Landfill.

Biological Resources.

The significant impacts at the site associated with biological resources would be eliminated under Alternative D by not expanding waste management activities onto the eastern and western properties. However, impacts to biological resources may be expected at other locations where solid waste would be managed, such as new facilities required by the jurisdictions to manage C&D waste materials.

Cultural Resources.

The potential for impacts to cultural resources at the site would be reduced under Alternative D, as site operations would not expand beyond the center property. However, impacts under the proposed project would be less than significant after mitigation. The potential for unanticipated cultural resources to be found during construction would be expected at other locations where solid waste would be managed, such as new facilities required by the jurisdictions to manage C&D waste materials.

Geology, Soils, and Paleontology.

The potential for impacts to geology, soils, and paleontology at the site would be reduced under Alternative D, as site operations would not expand beyond the center property. However, impacts to geology, soils, and paleontology under the proposed project would be less than significant after mitigation. The potential for impacts to geology, soils, and paleontology during construction would be expected at other locations where solid waste would be managed, such as new facilities required by the jurisdictions to manage C&D waste materials.

Greenhouse Gas Emissions and Climate Change.

Under Alternative D, waste recovery and waste disposal operations at the WPWMA would be similar to the proposed project but limited to the center property. Inbound material quantities and traffic would increase similar to the proposed project until the waste disposal capacity of the WRSL is reached in 2048. Construction and operational GHG emissions may be reduced from the proposed project. When the WRSL closes, GHG emissions associated with waste disposal would be relocated to a different site, assumed to be Recology's Ostrom Road Landfill.

Hazards and Hazardous Materials and Wildfire.

Under Alternative D, waste recovery and waste disposal operations at the WPWMA would be similar to Plan Concept 2 of the proposed project, although the C&D operation would cease at the site, and expansion of the WRSL on the western property would not occur. Alternative D impacts associated with hazards and hazardous materials and wildfire would be similar to the preferred project, but potentially reduced, as development would not occur on the eastern or western properties.

Hydrology and Water Quality.

The potential for impacts to hydrology at the site under Alternative D would be comparable to the proposed project, as appropriate site design and implementation of BMPs during construction and operation result in less-than-significant impacts. However, impacts to water quality under Alternative D may be greater than the proposed project, as Alternative D does not include excavation and relocation of solid waste placed in a landfill cell with a pre-Subtitle D liner. Alternative D would not provide the environmental benefit to water quality anticipated by removing the solid waste currently in place and redisposing of it in a Subtitle D-lined cell.

Land Use and Planning.

Similar to the proposed project, Alternative D would be consistent and nonconflicting with applicable local plans or policies, including the general plan, specific plan, zoning ordinance, or habitat conservation plan. Alternative D would be consistent with the existing land uses that have been occurring at the site. However, Alternative D would not develop the site in manner consistent with the land use and zoning envisioned in the Sunset Aera Plan, which identified industrial uses on all three of the WPWMA's properties, consistent with the site's ECO zoning.

Noise.

Under Alternative D, waste recovery and waste disposal operations at the WPWMA would be similar to Plan Concept 2 of the proposed project, although the C&D operation on the center property would end, the expansion of the WRSL on the western property would not occur, and complementary and programmatic elements would not be developed on the western or eastern properties. The potential noise impacts of

Alternative D would be similar to but less than the proposed project, because fewer pieces of onsite equipment would be needed and because waste management operations would not be expanded onto the western and eastern properties. Construction associated with Alternative D may result in a temporary direct increase in ambient noise levels around the area. However, estimated construction noise levels at existing surrounding sensitive land uses would be below the statutory requirements of the County, as was determined for the proposed project. The operation-related noise at existing noise-sensitive areas would also be expected to be less than the statutory requirements.

Public Services.

Under Alternative D, waste recovery and waste disposal operations at the WPWMA would be similar to Plan Concept 2 of the proposed project through 2048, although the C&D operation on the center property would be eliminated, expansion of the WRSL on the western property would not occur, and no complementary and programmatic elements would be developed. Existing agreements related to fire protection, law enforcement, and road maintenance between the WPWMA and Placer County would continue and be revised or expanded under Alternative D as needed, similar to the proposed project.

Transportation.

Under Alternative D, waste recovery and waste disposal operations at the WPWMA would be similar to the proposed project, but with activity occurring only on the center property. Inbound material quantities and associated traffic would increase in a manner similar to the proposed project until the waste disposal capacity of the WRSL is reached in 2048, with the exception of reduced material and traffic associated with the C&D operation. When the WRSL closes, traffic that currently goes to the WPWMA facility associated with waste disposal would be relocated to a different site, assumed to be Recology's Ostrom Road Landfill, which would be anticipated to increase traffic volumes on roads leading to the Recology facility, as well as adding VMT by waste vehicles traveling farther distances to deliver waste material.

Utilities and Energy.

The potential utilities and energy impacts of Alternative D would be similar to the proposed project through 2048, when the WRSL is anticipated to be full and close, after which time, the utilities and energy impacts of Alternative D would be reduced compared with the proposed project. The potential energy impacts for Alternative D would be similar but less than the proposed project because of less equipment is required to operate the C&D facility.

Alternative D (Three-Bin Clean MRF) Summary

Under Alternative D, management of solid waste at the WPWMA facility would occur on the center property only. The current single-stream mixed-waste system for waste collection would convert to a three-bin system that would require each Participating Agency and their designated waste haulers to comply accordingly. Waste disposal capacity would be limited, and the C&D operation would be eliminated to make room on the center property for management of organic waste.

Alternative D would avoid or substantially lessen one or more potentially significant environmental impacts of the proposed project, described as follows.

Aesthetics. Alternative D would reduce significant impacts to visual impacts associated with the proposed project in the vicinity of the WPWMA facility, by not increasing the overall permitted height of the WRSL from the currently permitted height and by avoiding two landfill mounds as in Plan Concept 2.

Biological Resources. Alternative D would significantly reduce impacts to biological resources at the site, as the alternative would use neither the eastern nor western properties.

Greenhouse Gas Emissions and Climate Change. Alternative D would reduce GHG emissions associated with the proposed project by shortening the operational life of the WRSL. Additional GHG emissions beyond the project site could result from increased transport from vehicles.

The ability of Alternative D to accomplish the objectives of the proposed project is illustrated in Table 18-4.

Table 18-4. Alternative D (Three-Bin Clean MRF) Ability to Meet Project Objectives

Project Objective	Project Objective Met by Alternative D?
Maintain a stable and relatively predictable cost structure through continued local-government control of solid waste management operations, improve operational efficiencies, and extend the operational life of the current WPWMA facility.	Partially
Expand the site's capacity to divert materials from landfill disposal and contribute to greenhouse gas emission reductions through expanded composting, improved recovery of C&D materials, recycling, and public buy-back activities.	Partially
Increase the WRSL's permitted footprint and height to optimize the efficient use of land for waste disposal and provide sufficient waste disposal capacity to accommodate anticipated long-term growth in the Participating Agencies' waste streams.	No
Enhance customer safety by improving site access and internal circulation, which would minimize potential conflicts between commercial vehicles and public users.	Partially
Provide the WPWMA with operational flexibility to accommodate an increasingly complex and evolving regulatory environment and conduct operations associated with Waste Action Plan implementation in the most environmentally responsible manner possible.	No
Facilitate the siting and development of compatible technologies that would benefit from proximity to the WPWMA.	No
Continue to improve compatibility between current and future WPWMA operations and existing and proposed adjacent land uses based on the surrounding area's anticipated transition to a more urban environment.	No
Encourage implementation of the PCCP and the integration of environmentally conscious practices into the facility operations.	Partially
Develop the WPWMA's properties consistent with the goals, policies, and implementation programs identified in the Sunset Area Plan (Placer County 2019).	No
Position the WPWMA facility as a hub of innovation that promotes the development of a circular economy in Placer County.	No

18.5 Comparison of Alternatives

A comparative summary of the significance of potential environmental impacts associated with the project alternatives, based on a qualitative evaluation compared with the preferred plan concept, is provided in Table 18-5. A discussion of the preferred plan concept was provided in Chapter 4, Approach. A detailed

discussion of the potential impacts associated with each alternative was provided in Section 18.5, and a summary of each alternative is provided as follows.

Alternative A (No Project) is a continuation of the existing operations under existing permits at the WPWMA facility until closure, without implementation of the Waste Action Plan. Activities allowed under existing permits would continue until the WRSL reached capacity, at which time, the landfill part of the facility would close. Solid waste management services would be constrained by limiting operation only to the center property and only to the existing permit limits.

Alternative A would avoid or substantially lessen one or more potentially significant environmental impacts of the proposed project, but those onsite impact reductions would likely be offset by increases in impacts wherever the solid waste that cannot be managed at the WPWMA facility is managed.

Alternative A would not significantly reduce impacts associated with aesthetics, as the permitted height of the WRSL still represents a significant impact, and waste would still be delivered to the site, which would result in the same level of offsite litter visual impact. While air quality impacts near the site would be reduced under Alternative A as a result of there being lesser quantities of solid waste managed, it is assumed that additional air emissions would be produced wherever the solid waste that cannot be managed at the site is taken for processing. Alternative A would use neither the eastern property nor the northern half of the western property, where the majority of sensitive biological resources would be affected by the proposed project; however, there is potential for impacts to biological resources at alternate locations where additional waste management activities would need to occur to replace those that could not expand at the WPWMA facility. While traffic impacts near the site associated with the proposed project would be reduced under Alternative A, it is assumed that additional traffic impacts would be produced near where the solid waste that cannot be managed at the site is ultimately taken for processing.

As shown in Table 18-1, Alternative A does not meet any of the objectives established for the proposed project. Alternative A will not allow the WPWMA to maintain a stable and relatively predictable cost structure through local control of solid waste. Alternative A will not expand the site's capacity to divert materials from landfill disposal and contribute to greenhouse gas emissions reductions, nor optimize the site to provide sufficient waste disposal capacity for long-term growth in the project area. Alternative A would not provide the WPWMA with the ability to respond to an increasingly complex and evolving regulatory waste environment nor allow the WPWMA to enhance customer safety by improving site access and internal circulation. By not using the eastern and western properties, Alternative A would not facilitate the siting and development of compatible technologies that would benefit from proximity to the WPWMA, would not position the WPWMA facility as a hub of innovation with regard to a circular economy, and would not develop the WPWMA's properties in a manner consistent with the Sunset Area Plan.

Alternative B (Prioritize Waste Recovery) concentrates waste recovery operations on the center property, restricts landfill capacity to the center property, and adds complementary and programmatic elements on the southern portion of the western property. No activity would occur on the eastern property or the northern portion of the western property.

Alternative B would reduce visual impacts associated with the proposed project near the WPWMA facility by not increasing the overall permitted height of the WRSL from the currently permitted height and by avoiding two landfill mounds as in Plan Concept 2; however, it would not reduce the potential for offsite litter visual impacts. Alternative B would significantly reduce impacts to biological resources at the site, as the alternative would use neither the eastern property nor the northern half of the western property,

where the majority of habitat for special-status wildlife species that rely on vernal pool-type wetlands would be affected by the proposed project.

As shown in Table 18-2, Alternative B partially meets the objectives established for the proposed project. Alternative B would not allow the WPWMA to increase the permitted footprint and height of the WRSL in order to maximize use of the facility and secure long-term waste disposal capacity. By not fully using the eastern and western properties, Alternative B would enhance customer safety by improving site access and internal circulation, but would only partially allow the WPWMA to expand the site's capacity to divert materials from landfill disposal or provide operational flexibility to accommodate an increasingly complex and evolving regulatory environment. As Alternative B uses the southern part of the western property for complementary and programmatic elements, such as compatible technologies, the alternative would facilitate the siting and development of compatible technologies that would benefit from proximity to the WPWMA, partially develop the WPWMA's properties in a manner consistent with the goals and policies of the Sunset Area Plan, and partially position the WPWMA facility as a hub of innovation that promotes a circular economy.

Alternative C (No Organics Processing) is similar to Plan Concept 1 of the proposed project but excludes processing of organic waste. Like the proposed project, Alternative C uses portions of all of the property available to the WPWMA.

Alternative C would reduce the potential for significant offsite odor impacts by eliminating processing of organic waste material at the WPWMA facility. Potentially significant impacts associated with aesthetics, biological resources, and transportation and traffic are unlikely to be reduced under Alternative C.

As shown in Table 18-3, Alternative C partially meets the objectives established for the proposed project. Alternative C would allow the WPWMA to increase the WRSL's permitted footprint and height to provide long-term waste disposal capacity, enhance customer safety by improving site access and internal circulation, and continue to improve compatibility between current and future WPWMA operations and existing and proposed adjacent land uses. Alternative C would also encourage implementation of the PCCP and integrate environmentally conscious practices into facility operations and allow for the development of the WPWMA's properties in a manner consistent with the goals and policies of the Sunset Area Plan. Alternative C would partially allow the WPWMA to maintain a stable and relatively predictable cost structure through local control of solid waste management operations. By eliminating the management of organic waste material at the site under Alternative C, the WPWMA would have limited ability to expand the site's capacity to divert materials from landfill disposal and contribute to greenhouse gas emission reductions, less operational flexibility to accommodate an increasingly complex and evolving regulatory environment, and a lesser ability to position the WPWMA facility as a hub of innovation that promotes the development of a circular economy in Placer County.

Under Alternative D (Three-Bin Clean MRF), management of solid waste at the WPWMA facility would occur on the center property only. The current single-stream mixed-waste system for waste collection would convert to a three-bin system that would require each Member Agency and delivering entity to comply accordingly. Waste disposal capacity would be limited, and the C&D operation would be eliminated.

Table 18-5. Significance of Potential Environmental Impacts Compared with Preferred Plan Concept

Environmental Resource Area	Preferred Plan Concept (Plan Concept 1)	Plan Concept 2	Alternative A (No Project)	Alternative B (Prioritize Waste Recovery)	Alternative C (No Organics Processing)	Alternative D (Three-Bin Clean MRF Alternative)
Aesthetics	S/U	S/U	Less (S/U)	Less (LTS)	Similar (S/U)	Less (S/U
Air Quality	S/U	S/U	Less (S/U)	Less (S/U)	Less	Less
Biological Resources	LTS	LTS	Less	Less	Similar (LTS)	Less
Cultural and Tribal Resources	LTS	LTS	Similar (LTS)	Similar (LTS)	Similar (LTS)	Similar (LTS)
Geology, Soils, and Paleontology	LTS	LTS	Similar (LTS)	Less (LTS)	Similar (LTS)	Less (LTS)
Greenhouse Gas Emissions and Climate Change	S/U	S/U	Less (S/U)	Similar (S/U)	Less (S/U)	Less (S/U)
Hazards, Hazardous Materials, and Wildfire	LTS	LTS	Similar (LTS)	Similar (LTS)	Similar (LTS)	Similar (LTS)
Hydrology and Water Quality	LTS	LTS	Greater (LTS)	Similar (LTS)	Similar (LTS)	Greater (LTS)
Land Use	NI	NI	Similar (NI)	Similar (NI)	Similar (NI)	Similar (NI)
Noise	LTS	LTS	Similar (LTS)	Similar (LTS)	Similar (LTS)	Similar (LTS)
Public Services	LTS	LTS	Similar (LTS)	Similar (LTS)	Similar (LTS)	Similar (LTS)

Table 18-5. Significance of Potential Environmental Impacts Compared with Preferred Plan Concept

Environmental Resource Area	Preferred Plan Concept (Plan Concept 1)	Plan Concept 2	Alternative A (No Project)	Alternative B (Prioritize Waste Recovery)	Alternative C (No Organics Processing)	Alternative D (Three-Bin Clean MRF Alternative)
Transportation	S/U	S/U	Less (S/U)	Similar (S/U)	Similar (S/U)	Greater (S/U)
Utilities and Energy	LTS	LTS	Less (LTS)	Similar (LTS)	Less (LTS)	Less (LTS)
Meet Project Objectives?	Yes	Yes	No	Partially	Partially	Partially
Reduce Significant and Unavoidable Impacts?	n/a	n/a	Yes	Yes	Yes	Yes

Notes:

NI = No Impact; PS = Potentially Significant; LTS = Less than Significant; S/U = Significant and Unavoidable. LTS impacts encompasses both significant (with mitigation) and less than significant impacts (without mitigation).

Impact comparison is for onsite and vicinity-related impacts only and does not reflect potential offsite impacts in cases where waste would be managed at different locations.

Alternative D would reduce the potential for significant visual impacts associated with the proposed project near the WPWMA facility by not increasing the overall permitted height of the WRSL from the currently permitted height and by avoiding two landfill mounds as in Plan Concept 2; however, it would not reduce the potential for offsite litter visual impacts. Alternative D would significantly reduce impacts to biological resources at the site, as the alternative would use neither the eastern property nor the northern half of the western property, where the majority of habitat for special-status wildlife species that rely on vernal pool-type wetlands would be affected by the proposed project.

As shown in Table 18-4, there are no objectives of the proposed project that would be fully met by Alternative D. Alternative D would allow the WPWMA to partially maintain a stable and relatively predictable cost structure through continued local control of solid waste management operations, partially expand the site's capacity to divert materials from landfill disposal and contribute to greenhouse gas emission reductions, and partially enhance customer safety by improving site access and internal circulation. Alternative D would not allow the WPWMA to secure long-term waste disposal capacity and would not provide the WPWMA with the operational flexibility to accommodate an increasingly complex and evolving regulatory environment. Alternative D would not contribute to improved compatibility between current and future WPWMA operations and existing and proposed adjacent land uses, would not develop the WPWMA properties in a manner consistent with the goals and policies of the Sunset Area Plan, would not facilitate the siting and development of compatible technologies that would benefit from proximity to WPWMA, and would not position the WPWMA facility as a hub of innovation that promotes the development of a circular economy in Placer County.

18.6 Environmentally Superior Alternative

From among the alternatives evaluated, CEQA requires that a DEIR identify the environmentally superior alternative. Based on the discussion of the various alternatives, the alternative that would result in the fewest onsite or local environmental impacts is Alternative A, the No Project Alternative. Alternative A is a continuation of the existing operations under existing permits at the WPWMA facility until closure, without implementation of the Waste Action Plan. Activities allowed under existing permits would continue until the WRSL reaches capacity, at which time, the landfill portion of the facility would close. While Alternative A would continue operations on the center property of the WPWMA facility, the constraints of the alternative would reduce but not eliminate potentially significant impacts of the proposed project related to aesthetics, air quality and odor, GHG emissions, and transportation and traffic. Alternative A would potentially eliminate significant impacts at the site associated with biological resources by not expanding waste management activities onto the eastern and western properties.

However, while air quality impacts near the site would be reduced under Alternative A, it is assumed that additional air and GHG emissions would be produced wherever the solid waste that cannot be managed at the site is taken for processing. Similarly, as the WPWMA facility becomes unable to take increasing quantities of waste in response to population growth, additional waste management would be required elsewhere on a jurisdiction-by-jurisdiction basis. It is anticipated that these operations, at locations other than the WPWMA facility, would produce traffic in amounts proportional to the amount of waste being processed, up to the amount assumed for the proposed project. Nevertheless, when considering the ability of the alternatives to reduce direct environmental impacts at the project site, the No Project Alternative (Alternative A) would be the environmentally superior alternative, although it would not achieve the project objectives.

Per Section 15126.6(e)(2) of the CEQA Guidelines, if the environmentally superior alternative is the No Project Alternative, "the EIR shall also identify an environmentally superior alternative among the other alternatives."

The remaining alternatives, Alternatives B (Prioritize Waste Recovery), C (No Organics Processing), and D (Three-Bin Clean MRF), each have the potential to avoid or reduce some of the significant and unavoidable impacts of the proposed project. By not fully using the WPWMA's eastern and western properties, Alternatives B and D eliminate the loss and degradation of habitat for special-status wildlife species that rely on vernal pool-type wetlands for at least part of their lifecycle, including federally listed vernal pool fairy shrimp and vernal pool tadpole shrimp and western spadefoot, a California species of special concern. However, the PCCP would address potential impacts to vernal pool-type wetlands on a County-wide basis, with or without implementation of the proposed project. Comparatively, by eliminating the processing of organic waste at the WPWMA facility, Alternative C would significantly reduce the potential for offsite odor impacts. Because offsite odor impacts have the potential to significantly affect adjacent residents, the WPWMA determined that reducing the potential for odor impacts was of greater concern than reducing impacts to vernal pools.

As such, the WPWMA has determined that Alternative C (No Organics Processing) is the Environmentally Superior Alternative.

18.7 References

Placer County. 2019. Sunset Area Plan / Placer Ranch Specific Plan Final Environmental Impact Report. State Clearinghouse #2016112012. October. Prepared by Ascent Environmental, Sacramento, CA.

19. Cumulative Impacts

19.1 Introduction

This Draft Environmental Impact Report (DEIR) provides an analysis of overall cumulative impacts of the project taken together with other past, present, and probable future projects producing related impacts, as required by Section 15130 of the *California Environmental Quality Act Guidelines* (State CEQA Guidelines). The goal of such an exercise is twofold: first, to determine whether the overall long-term impacts of all such projects would be cumulatively significant; and second, to determine whether the project itself would cause a "cumulatively considerable" (and thus significant) incremental contribution to any such cumulatively significant impacts. (See State CEQA Guidelines Sections 15130[a]-[b], Section 15355[b], Section 15064[h], Section 15065[c]; Communities for a Better Environment v. California Resources Agency [2002] 103 Ca1.App.4th 98, 120.) In other words, the required analysis intends to first create a broad context in which to assess the project's incremental contribution to anticipated cumulative impacts, viewed on a geographic scale well beyond the project site itself, and then to determine whether the project's incremental contribution to any significant cumulative impacts from all projects is itself significant (that is, "cumulatively considerable" in CEQA parlance).

Pursuant to State CEQA Guidelines Section 15130, "[t]he discussion of cumulative impacts shall reflect the severity of the impacts and their likelihood of occurrence, but the discussion need not provide as great detail as is provided for the effects attributable to the project alone. The discussion should be guided by the standards of practicality and reasonableness, and should focus on the cumulative impacts to which the identified other projects contribute rather than the attributes of other projects which do not contribute to the cumulative impact." The proposed project is considered to have a significant cumulative effect if the following criteria are met:

1) The cumulative effects of development without the project are not significant, and the project's additional impact is substantial enough, when added to the cumulative effects, to result in a significant impact; or

2) The cumulative effects of development without the project are already significant, and the project contributes measurably to the effect. The term "measurably" is subject to interpretation. The standards used herein to determine measurability are that either the impact must be noticeable to a reasonable person, or must exceed an established threshold of significance.

State CEQA Guidelines Section 15130 states that the following elements are necessary for an adequate discussion of significant cumulative impacts:

- A list of past, present, and reasonably anticipated future projects producing related or cumulative impacts, including those projects outside the control of the agency (list approach), or a summary of projections contained in an adopted local, regional or statewide plan, or related planning document, that describes or evaluates conditions contributing to the cumulative effect. A summary of projections may also be contained in an adopted or certified prior environmental document for such a plan. Any such planning document shall be referenced and made available to the public at a location specified by the lead agency (plan approach).
- A summary of expected environmental effects to be produced by those projects with specific reference to additional information stating where that information is available.

- A reasonable analysis of the cumulative impacts of the relevant projects. An EIR [environmental impact report] shall examine reasonable, feasible options for mitigating or avoiding the project's contribution to any significant cumulative effects.

Pursuant to State CEQA Guidelines Section 15130(d), previously approved land use documents may be used in cumulative impact analysis. A pertinent discussion of cumulative impacts contained in a previously certified EIR may be incorporated by reference pursuant to the provisions for tiering and program EIRs. No further cumulative impacts analysis is required when a project is consistent with a general, specific, master or comparable programmatic plan where the lead agency determines that the regional or areawide cumulative impacts of the proposed project have already been adequately addressed, as defined in Section 15152(f), in a certified EIR for that plan.

Tiering refers to using the analysis of general matters contained in a broader EIR (such as one prepared for an area plan) with later EIRs on narrower projects; incorporating by reference the general discussions from the broader EIR; and concentrating the later EIR solely on the issues specific to the later project (State CEQA Guidelines Section 15152(a)). Agencies are encouraged to tier the environmental analyses they prepare for separate but related projects. This approach can eliminate repetitive discussions of the same issues and focus the later EIR on the actual issues ripe for decision.

As discussed in State CEQA Guidelines Section 15152(f)(1) and (2), where a lead agency determines that a cumulative effect has been adequately addressed in the prior EIR, that effect is not treated as significant for purposes of the later EIR and need not be discussed in detail. When assessing whether there is a new significant cumulative effect, the lead agency shall consider whether the incremental effects of the project would be considerable when viewed in the context of past, present, and probable future projects.

The project site is located entirely within the boundaries of the Sunset Area Plan (SAP), an area that encompasses 8,497 acres in unincorporated west Placer County (Placer County 2019). The SAP is a policy document intended to guide growth in the SAP area over a 20-year planning horizon; buildout of the SAP area is expected to occur over 80 years or more. An EIR was prepared to evaluate the physical environmental effects of the proposed SAP pursuant to CEQA (*Public Resources Code* [PRC] Section 21000, et seq.) and the CEQA Guidelines (*California Code of Regulations* [CCR], Title 14, Chapter 3, Section 1500, et seq.). The SAP EIR programmatically evaluated the environmental impacts that would be anticipated with the expansion of solid waste elements and development of industrial uses on the Western Placer Waste Management Authority (WPWMA) properties in a manner consistent with the site's land use and zoning designations. Both plan concepts include the development of the WPWMA's properties in a manner consistent with the land use and zoning designations identified in the SAP. Therefore, the impact analysis included in the SAP EIR is directly applicable to the proposed project.

The proposed project evaluated in this EIR was foreseen by the SAP and SAP EIR and is included in the cumulative project list in the SAP EIR. Consequently, the cumulative impacts of the proposed project, in conjunction with the development of the SAP and other projects included on the SAP EIR cumulative project list, were addressed in the SAP EIR.

Therefore, this EIR uses the tiering concept and is hereby incorporating by reference the information included in the SAP EIR, in accordance with CEQA Guidelines Section 15150. An EIR may incorporate by reference all or parts of another document that is a matter of public record or is generally available to the public (CEQA Guidelines Section 15150). This EIR tiers off the analysis included in the SAP EIR for the cumulative impact analysis. The discussion that follows in this chapter briefly summarizes the cumulative impacts identified in the SAP EIR and their relevance to the proposed project.

19.2 Cumulative Impact Analysis

19.2.1 Aesthetics

The SAP EIR concluded that development of the SAP and other cumulative projects would cause substantial degradation of visual quality in some areas south and west of State Route 65 where development creates abrupt transitions between open space and agricultural areas and development. The development of rural and agricultural areas into areas with commercial, residential, and industrial development would cause a substantial change in visual character. This development would also contribute to substantial light that would adversely affect nighttime views in the area. These cumulative impacts were identified in the SAP EIR as significant and unavoidable. The development of the SAP and other cumulative projects were estimated to create less-than-significant cumulative glare impacts.

The proposed project would not create new cumulatively considerable aesthetic resource impacts that were not considered in the SAP EIR. The proposed project does not include any uses that were not considered in the SAP EIR for the project site. Therefore, cumulative aesthetic resource impacts have been adequately addressed in the SAP EIR, and no additional discussion of cumulative impacts beyond what was included in the SAP EIR is warranted.

19.2.2 Air Quality

The SAP EIR concluded that development of the SAP and other cumulative projects would result in significant and unavoidable cumulative air quality impacts. These include significant and unavoidable construction emissions of criteria air pollutants and ozone precursors, long-term operational emissions of criteria air pollutants and ozone precursors, the exposure of sensitive receptors to TACs, and the exposure of sensitive receptors to odors. The cumulative generation of mobile-source CO emission concentrations were identified as less than significant.

The following discussion provides more details on the incremental air quality impacts of the proposed project when viewed in the context of past, present, and probable future projects. The proposed project would result in cumulatively considerable air quality impacts that are consistent with the SAP EIR findings of significant and unavoidable cumulative impacts.

Construction Emissions of Criteria Air Pollutants and Ozone Precursors.

Construction activities related to the proposed project, in combination with the reasonably foreseeable regional urban development described in the SAP DEIR, would add emissions of the criteria pollutants for which the project region is in nonattainment under applicable health-protective federal and state ambient air quality standards, including emissions of the ozone precursors, ROG and NOx, and particulate matter (PM_{10} and $PM_{2.5}$). Development projects, while required to mitigate for adverse air quality impacts from construction, would contribute to regional emissions that may conflict with area air quality plans and attainment efforts. The proposed project's contributions to the nonattainment status of Placer County and the SVAB with respect to the NAAQS and CAAQS would be cumulatively considerable. Because no mitigation is available beyond that recommended for the project, the cumulative impact for project-specific construction emissions would be significant and unavoidable. This finding for the proposed project is consistent with the findings of the SAP EIR, which determined that project construction emissions would be cumulatively considerable, and the cumulative impact would be significant and unavoidable.

Operational Emissions of Criteria Air Pollutants and Ozone Precursors.

As described in the SAP DEIR, ozone-related impacts are the result of cumulative emissions from numerous sources in the region and transport from outside the region. The SAP DEIR concluded that reasonably foreseeable development will add urban growth on over 50,000 acres of primarily undeveloped land in the region, increasing the ambient concentrations of precursor emissions, like NOx, that contribute to ozone impacts. Sources of particulate matter emissions (PM_{10} and $PM_{2.5}$) have similar regional cumulative impacts when concentrations increase over time, especially during periods of dry conditions with high winds or high levels of earth disturbing activities. When all sources throughout the region are combined, they can result in ambient concentrations of pollutants that exceed the NAAQS and CAAQS (Placer County 2018). The proposed project's contributions to the nonattainment status of Placer County and the SVAB with respect to the NAAQS and CAAQS would be cumulatively considerable. Because no mitigation is available beyond that recommended for the project, the cumulative impact for project-specific operational emissions would be significant and unavoidable. This finding for the proposed project is consistent with the findings of the SAP EIR, which determined that the project's contribution of pollutants that exceed the CAAQS and NAAQS would be cumulatively considerable, and the cumulative impact would be significant and unavoidable.

Mobile-Source Concentrations of Carbon Monoxide.

The proposed project would not create new cumulatively considerable CO impacts that were not considered in the SAP EIR. Therefore, cumulative air quality impacts for mobile source concentrations of CO have been adequately addressed in the SAP EIR, and no additional discussion of cumulative impacts beyond what was included in the SAP EIR is warranted.

Exposure of Sensitive Receptors to TACs.

The exposure of sensitive receptors to TACs, which has been evaluated at the project-level under Impact 6-5, is also an impact of localized, cumulative concern. The approved SAP/PRSP included an amendment to County General Plan Policy 4.G.11, to reduce the 1- mile (5,280-foot) buffer for new residential uses around the WPWMA property. Under the approved SAP/PRSP, new residential uses beyond 2,000 feet but within one mile of the WPWMA property boundary could occur if approved under a specific plan, master plan, or development agreement. Therefore, the General Plan amendment may result in future development of residential uses within 1 mile of the WPWMA property in currently undeveloped areas.

To evaluate potential impacts under cumulative conditions, exposures to project-related TACs and the associated health risks have been characterized for a receptor grid, which includes both the receptor locations analyzed in the project level analysis and the new receptor locations that could result from future area development, including residential communities, businesses, and sensitive receptors such as schools. This risk analysis does not evaluate the increases in cumulative TAC emissions that would be anticipated for development associated with buildout of the SAP and surrounding lands; the SAP EIR provided a qualitative evaluation of the cumulative risks associated with development of the SAP and other cumulative projects and concluded that the larger development of the SAP would result in significant and unavoidable exposure of sensitive receptors to TACs.

This risk assessment for cumulative impacts evaluated carcinogenic (cancer) and non-carcinogenic (non-cancer) health risks for potential receptor locations and exposure conditions under future development plans for cumulative conditions under both proposed project plan concepts. Specific assumptions, modeling inputs, figures, and full cumulative risk assessment results are presented in the Health Risk Assessment Modeling Report in Appendix C.5.

Based on the results of the HRA for project-related emissions under cumulative conditions, exposures to TACs at nearby residential receptor locations would result in risk values that exceed PCAPCD thresholds of significance for cancer risk. The incremental increase in lifetime cancer risk associated with exposure to project-related TAC emissions under cumulative conditions at the location of the MEIR (also the cumulative sensitive receptor, located approximately 1.5 kilometers from the facility's Southeast boundary) is predicted to be 56.9 in 1 million for Plan Concept 1 and 57.1 in 1 million for Plan Concept 2, exceeding the PCAPCD threshold of significance of 10 in 1 million. DPM emissions associated with offsite truck traffic are the main contributing source in this cancer risk assessment.

Risk values at the residential and sensitive receptor locations would not exceed PCAPCD thresholds of significance for non-cancer chronic or acute exposures for either Plan Concept. Similarly, the evaluated exposure conditions at nearby workplace locations under cumulative conditions would not result in risk values that exceed PCAPCD thresholds of significance for cancer, non-cancer chronic, or non-cancer acute exposures.

The SAP EIR concluded that development of the SAP and other cumulative projects would result in significant and unavoidable exposure of sensitive receptors to TACs. While emission reduction approaches and technologies would be implemented by the WPWMA as part of the Renewable Placer: Waste Action Plan, the nature and effectiveness of these measures are unknown at this time, and TAC-related impacts associated with the proposed project would be cumulatively considerable. Cumulative impacts related to exposure of sensitive receptors to TACs would be significant and unavoidable. This finding for the proposed project is consistent with the findings of the SAP EIR, which determined that the project's contribution to cumulative TACs would be cumulatively considerable, and the cumulative impact would be significant and unavoidable.

Create objectionable odors affecting a substantial number of people.

The SAP EIR predicted that cumulative development would make use of the WPWMA facilities for waste disposal, composting, and material recovery, which would result in a substantial increase in the incoming waste stream and associated odor emissions. The SAP EIR concluded that because the development of the SAP would result in the exposure of a substantial number of people to objectionable odors, the cumulative odor impacts would be significant and unavoidable.

While odor abatement approaches and technologies would be implemented by the WPWMA as part of the Renewable Placer: Waste Action Plan, the nature and effectiveness of these measures are unknown at this time, and odor impacts would be cumulatively considerable. Therefore, the cumulative impact for odors would be significant and unavoidable. This finding is consistent with the findings of the SAP EIR, which determined that the impact of the project relative to odor impacts would be cumulatively considerable, and the cumulative impact would be significant and unavoidable.

19.2.3 Biological Resources

The SAP EIR concluded that development of the SAP and other cumulative projects would result in significant and unavoidable cumulative impacts related to the loss and degradation of state or federally protected waters; the loss of federally listed vernal pool branchiopods and western spadefoot; and the loss of special-status reptile, bird, and mammal species. Less-than-significant cumulative biological resource impacts identified in the SAP EIR included loss of special-status plant and fish species, loss of elderberry longhorn beetle, loss or degradation of riparian habitat, interference with wildlife movement, loss of wildlife nursery sites, conflicts with local policies protecting biological resources, and conflicts with an adopted Habitat Conservation Plan.

The proposed project would not create new cumulatively considerable biological resource impacts that were not considered in the SAP EIR. The SAP EIR assumed the same disturbance to site-specific biological resources as assumed in this EIR. Therefore, cumulative biological resource impacts have been adequately addressed in the SAP EIR, and no additional discussion of cumulative impacts beyond what was included in the SAP EIR is warranted.

19.2.4 Cultural and Tribal Resources

The SAP EIR concluded that because no specific Tribal Cultural Resources (TCRs) have been identified within the SAP area, and mitigation measures were identified in the EIR that would minimize impacts to any discovered TCRs, the development of the SAP and other cumulative projects would result in less-than-significant impacts on TCRs. The SAP EIR further concluded that with implementation of SAP Policies CR-1.1, 1.5, 1.6, and 1.7, and Mitigation Measure 4.5-1b, as well as compliance with *Health and Safety Code* Sections 7050.5 and 7052, and PRC Section 5097, adverse effects on known archaeological resources, potentially newly discovered archaeological resources, and human remains would be less than significant. For historical resources, the SAP EIR concluded that although no known historical resources are located within the boundaries of the SAP, cumulative buildout could potentially destroy or damage historical cultural resources that have not yet been identified or evaluated. The destruction of or damage to historical resources was identified in the SAP EIR as a considerable contribution to a significant cumulative impact that would remain significant and unavoidable.

The proposed project would not create new cumulatively considerable cultural resource impacts that were not considered in the SAP EIR. No significant cultural, archaeological, or historical resources or TCRs were identified on the project site during cultural resource surveys. Therefore, cumulative cultural resource impacts have been adequately addressed in the SAP EIR, and no additional discussion of cumulative impacts beyond what was included in the SAP EIR is warranted.

19.2.5 Geology, Soils, and Paleontological Resources

Potential project impacts related to geology, soils, seismicity, and groundwater are site-specific and would not generally combine with related impacts of other projects to create cumulatively considerable impacts. The SAP EIR acknowledged that the cumulative development area is characterized by limited topographic relief and variation. All projects within the SAP larger than 1 acre, including the proposed project, would be required to comply with the National Pollution Discharge Elimination System Construction General Permit. Additionally, projects would be required to comply with standard engineering practices and applicable regulations regarding building within areas containing expansive soils. The SAP EIR concluded that cumulative development would not change the availability of mineral resources or contribute to a regional cumulative loss of paleontological resources. The SAP EIR concluded that development of the SAP and other cumulative projects would result in less-than-significant cumulative impacts on geology, soils, and paleontological resources.

The proposed project would not create new cumulatively considerable geology, soils, and paleontological resource impacts that were not considered in the SAP EIR. The proposed project does not include any soil-disturbing activities that were not considered in the SAP EIR for the project site. Therefore, cumulative geology, soils, and paleontological resource impacts have been adequately addressed in the SAP EIR, and no additional discussion of cumulative impacts beyond what was included in the SAP EIR is warranted.

19.2.6 Greenhouse Gas Emissions

The SAP EIR concluded that development of the SAP and other cumulative projects would result in a significant and unavoidable cumulative GHG impact. This impact includes specifically the generation of significant and unavoidable operational GHG emissions that could conflict with the state's ability to meet its statewide GHG targets. More details on cumulative GHG emissions impacts are provided in the following.

The analysis of GHG emissions associated with the proposed project is inherently a cumulative impact analysis. GHG emissions from one project cannot, on their own, result in changes in climatic conditions, therefore, the emissions of individual projects must be considered in the context of their contribution to cumulative global emissions. The emissions estimates prepared to support this draft environmental impact report indicate that the level of construction and operational emissions associated with implementation of the proposed project would exceed PCAPCD's bright line threshold of 10,000 MT CO_2e per year, and therefore would be cumulatively considerable. Implementation of GHG reduction measures and mitigation measures, along with establishment of offsets or purchase of carbon credits, would not reduce GHG emissions below PCAPCD significance thresholds for the life of the project. Because the availability and affordability of GHG offset credits in the future is uncertain, the impact remains significant and unavoidable.

19.2.7 Hazards, Hazardous Materials, and Wildfire

The SAP EIR concluded that hazards associated with development of the SAP and other cumulative projects would be local and would have no potential to contribute to cumulative hazardous conditions. Future development in the region would be subject to contemporary safety and hazardous materials controls, as set forth in the numerous regulations that control the use of potentially hazardous materials. The development of the SAP and other cumulative projects was estimated to create less-than-significant cumulative hazard and hazardous materials impacts.

The proposed project would not create new cumulatively considerable hazards impacts that were not considered in the SAP EIR. The proposed project does not include any uses that were not considered in the SAP EIR for the project site. Therefore, cumulative hazards impacts have been adequately addressed in the SAP EIR, and no additional discussion of cumulative impacts beyond what was included in the SAP EIR is warranted.

While the SAP EIR did not evaluate impacts to wildfire, the proposed project and surrounding vicinity are not located in a wildland area with substantial forest fire risks and hazards nor in very high fire hazard severity zones. Therefore, the proposed project would result in no cumulative impacts on wildfire.

19.2.8 Hydrology and Water Quality

The SAP EIR stated that development of the SAP and other cumulative projects would adversely affect hydrology and water quality but concluded that these impacts would be less than significant. Cumulative development would increase regional stormwater runoff and the potential for downstream flooding. However, projects would be required to comply with the Central Valley Regional Water Quality Control Board, Placer County, and municipal stormwater regulations and ordinances. Therefore, these impacts would not be cumulatively considerable. Because most new developments, including those within the SAP and other cumulative projects, would be served primarily by surface water, development would not cumulatively contribute to groundwater depletion or recharge. Similar to stormwater runoff impacts, the cumulative water quality impacts associated with both construction and post-construction operations

would be minimized through the implementation of regulatory water quality protection measures. Therefore, development of the SAP and other cumulative projects would not contribute considerably to a significant cumulative impact related to water quality. Cumulative development projects would be required to meet existing mitigation standards to prevent an increase in 100-year flood flows and would be subject to federal and County floodplain protection regulations. Therefore, flood impacts would be less than significant.

The proposed project would not create new cumulatively considerable hydrology or water quality impacts that were not considered in the SAP EIR. The proposed project does not include any uses that were not considered in the SAP EIR for the project site. Therefore, cumulative hydrology and water quality impacts have been adequately addressed in the SAP EIR, and no additional discussion of cumulative impacts beyond what was included in the SAP EIR is warranted.

19.2.9 Land Use and Planning

The SAP EIR stated that development of the SAP and other cumulative projects would result in no cumulative land use impacts. The SAP would be consistent and compatible with existing and planned development, would not cause the physical division of an established community, and would not cause economic or social changes that would result in physical environmental changes.

The proposed project would not create new cumulatively considerable land use impacts that were not considered in the SAP EIR. The proposed project does not include any uses that were not considered in the SAP EIR for the project site. Therefore, cumulative land use impacts have been adequately addressed in the SAP EIR, and no additional discussion of cumulative impacts beyond what was included in the SAP EIR is warranted.

19.2.10 Noise

The SAP EIR concluded that development of the SAP and other cumulative projects would result in significant and unavoidable cumulative impacts related to short-term construction noise and long-term operational noise (stationary and transportation). Implementation of a noise-reduction program (SAP Program N-2) was identified as a way to minimize transportation noise associated with cumulative development, although not to a less-than-significant level. The SAP EIR concluded that cumulative vibration noise impacts would be less than significant.

The proposed project would not create new cumulatively considerable noise impacts that were not considered in the SAP EIR. The proposed project would generate noise levels consistent with the solid waste and industrial uses anticipated for the site in the SAP. Therefore, cumulative noise impacts have been adequately addressed in the SAP EIR, and no additional discussion of cumulative impacts beyond what was included in the SAP EIR is warranted.

19.2.11 Public Services

The SAP EIR stated that development of the SAP and other cumulative projects would increase the demand on public services but concluded that these impacts would be less than significant. Cumulative development would increase the demands on fire protection and emergency response services, law enforcement services, public schools, library services, and parks and recreation facilities. However, upgraded public service infrastructure would be constructed in a manner consistent with development of the SAP. Therefore, development of the SAP and other cumulative projects would not contribute considerably to a significant cumulative impact related to public services, and these impacts would be less than significant.

The proposed project would not create new cumulatively considerable public services impacts that were not considered in the SAP EIR. The proposed project does not include any uses that were not considered in the SAP EIR for the project site. Therefore, cumulative public services impacts have been adequately addressed in the SAP EIR, and no additional discussion of cumulative impacts beyond what was included in the SAP EIR is warranted.

19.2.12 Transportation

The SAP EIR concluded that development of the SAP and other cumulative projects would result in significant and unavoidable cumulative impacts related to the generation of vehicle miles traveled (VMT). The SAP VMT per capita would remain above the regional average VMT per capita, as forecast in the Sacramento Area Council of Governments 2016 Metropolitan Transportation Plan (SACOG 2016). The SAP EIR also identified significant and unavoidable cumulative level-of-service impacts on local roadways and freeway interchanges. However, with adoption of SB 743 by the California legislature in 2013 and the addition of Section 15064.3 into the State CEQA Guidelines, traffic level-of-service impacts are no longer considered significant.

The proposed project would not create new cumulatively considerable transportation impacts that were not considered in the SAP EIR. The SAP EIR assumed the generation of substantially greater VMT from the project site than is anticipated in this EIR. Therefore, cumulative transportation impacts have been adequately addressed in the SAP EIR, and no additional discussion of cumulative impacts beyond what was included in the SAP EIR is warranted.

19.2.13 Utilities and Energy

The SAP EIR stated that development of the SAP and other cumulative projects would increase the demand on public utilities and energy but concluded that these impacts would be less than significant. Cumulative development would increase the demand for water supply, including conveyance and treatment; waste water collection and conveyance; waste water treatment; stormwater drainage infrastructure; solid waste services; electricity; natural gas; and communication services. However, upgraded utility and energy infrastructure would be constructed in a manner consistent with development of the SAP. Therefore, development of the SAP and other cumulative projects would not contribute considerably to a significant cumulative impact related to public utilities and energy, and these impacts would be less than significant.

The proposed project would not create new cumulatively considerable public utility or energy impacts that were not considered in the SAP EIR. The proposed project does not include any uses that were not considered in the SAP EIR for the project site. Therefore, cumulative public utility and energy impacts have been adequately addressed in the SAP EIR, and no additional discussion of cumulative impacts beyond what was included in the SAP EIR is warranted.

19.3 References

Placer County. 2019. *Sunset Area Plan/Placer Ranch Specific Plan Final Environmental Impact Report.* State Clearinghouse #2016112012. October. Prepared by Ascent Environmental, Sacramento, CA.

Sacramento Area Council of Governments (SACOG). 2016. *2016 Metropolitan Transportation Plan/Sustainable Communities Strategy: Building a Sustainable System*. https://www.sacog.org/sites/main/files/file-attachments/mtpscs_complete.pdf?1489089196.

20. Other CEQA Required Sections

20.1 Introduction

This chapter includes a discussion of the project's significant environmental effects that cannot be avoided, significant irreversible environmental changes, and growth-inducing effects, as required by State *California Environmental Quality Act* (CEQA) *Guidelines* Section 15126, and effects found not to be significant, as required by Section 15128.

20.2 Significant Environmental Effects That Cannot Be Avoided

State CEQA Guidelines (Section 15126.2(c)) require a discussion of significant environmental effects that cannot be avoided if the proposed project is implemented. Unavoidable impacts are those that cannot be mitigated to a less-than-significant level. Mitigation measures proposed as part of the proposed project, including those required to comply with state and federal regulations and those recommended by this draft environmental impact report (DEIR), would reduce the majority of the impacts to a less-than-significant level. However, as discussed in Chapter 2, Executive Summary, the proposed project would result in significant and unavoidable impacts to aesthetic resources, air quality, greenhouse gas (GHG) emissions, and transportation, described as follows.

Aesthetics. Implementation of the proposed project would result in significant impacts, primarily related to the final maximum elevation of the WRSL, which would be much more prominent in the landscape because of its larger size and height, resulting in greater levels of visual contrast with the surrounding open space and agricultural land uses. Additionally, the generation of offsite litter from vehicles accessing the facility would continue to be significant and unavoidable as the project expands.

Air Quality. Implementation of the proposed project would result in significant air quality impacts. Specifically, the proposed project has the potential to result in impacts related to offsite odors that remain significant after mitigation.

Greenhouse Gases. Implementation of the proposed project would result in significant GHG impacts; specifically, the proposed project has the potential to result in increases in GHG production that remain significant after mitigation.

Transportation. Implementation of the proposed project would result in significant impacts to traffic and transportation related to new daily vehicle travel, which would add vehicle miles traveled to the project area.

20.3 Significant Irreversible Environmental Changes

State CEQA Guidelines (Section 15126.2(d)) require a discussion of the significant irreversible environmental changes that would be caused by the proposed project. Significant irreversible environmental changes may include committing to use of nonrenewable resources that future generations would be unable to reverse or providing access to previously inaccessible areas. The commitment of resources should be evaluated to justify such current consumption.

The proposed project would result in an increase in consumption of nonrenewable resources (that is, fossil fuels, including diesel, gasoline, and propane) during construction and operations associated with the use

of heavy equipment, increase in transportation, and increase in electricity usage. A full analysis on energy required for implementation of the proposed project is described in Chapter 17, Utilities and Energy.

The proposed project involves expanding existing solid waste operations and constructing complementary and programmatic uses, resulting in the conversion of undeveloped land on the eastern and western properties. This change in land use would represent a long-term commitment to the proposed use, as the potential for the proposed uses to be reverted back to undeveloped land uses is highly unlikely.

Lastly, the proposed project could result in irreversible damage from environmental accidents, such as an accidental spill or explosion of a hazardous material. During construction, equipment on the site would use various types of fuel. Operation of the proposed project would include the use of hazardous materials, primarily associated with heavy equipment operations, which could increase the risk of an accidental spill or release. However, these hazardous materials would be used in relatively small quantities, and in California, various local and regional agencies strictly regulate and enforce how hazardous substances are stored, used, and sold. The enforcement of these existing regulations would be expected to minimize the potential for irreversible damage associated with accidental spills or explosions on the project site.

Although the proposed project would result in the irretrievable commitment of nonrenewable resources, the Western Placer Waste Management Authority (WPWMA) Board of Directors could reasonably conclude that such consumption would be justified because the proposed project would provide an important and necessary public service for local and regional businesses and residents, and would contribute to economic development in the region. In addition, the project includes components that would offset, to some degree, the use of nonrenewable resources, including the following:

- Beneficial reuse of landfill gas (LFG): As the landfill expands, LFG generated from the site would continue to be converted to renewable electricity.
- The complementary and programmatic element of the proposed project includes the construction of an LFG-to-compressed natural gas facility. With the installation of this facility, the WPWMA would produce and sell renewable vehicle-grade or pipeline-grade compressed natural gas, hydrogen, or other renewable fuel.
- Other renewable energy technologies are anticipated to be developed as part of the complementary and programmatic element that could result in additional renewable energy production from LFG.

20.4 Growth-Inducing Effects

State CEQA Guidelines (Section 15126.2(e)) require an evaluation of the growth-inducing impacts of the proposed project. A growth-inducing impact is defined by the CEQA Guidelines as follows:

> *The ways in which the proposed project could foster economic or population growth, or the construction of additional housing, either directly or indirectly, in the surrounding environment. Included in this are projects which would remove obstacles to population growth… It must not be assumed that growth in any area is necessarily beneficial, detrimental, or of little significance to the environment*.

The proposed project has been developed to identify the physical and operational waste recovery and waste disposal changes needed at the WPWMA facility to continue providing high-quality solid waste management services in response to a fast-growing population in an increasingly complex regulatory environment and rapidly changing global recycling markets. The area surrounding the project site consists of undeveloped open space, and no existing residential subdivisions are located within 1 mile of the site.

The proposed project would provide for ongoing waste disposal and recovery operations and could increase local employment to accommodate these operations. However, workers would be expected to come from the existing workforce within the surrounding communities. The implementation of the complementary and programmatic elements would further expand the demand for workers. Depending upon how quickly the complementary and programmatic elements are developed, the increased demand for workers could increase the demands on the local housing supply. However, the proposed project is consistent with the land use and zoning designation in the Sunset Area Plan (SAP), and by extension, the employment, public facility development, and housing assumptions evaluated in the SAP environmental impact report (EIR). Implementation of the proposed project would be expected to generate employment opportunities for current and future residents consistent with the SAP's goals and policies. Therefore, the proposed project would not be expected to induce substantial unplanned population growth or housing demand in the County and would not be expected to be growth inducing.

20.5 Impacts Found Not to Be Significant

Section 15128 of the CEQA Guidelines require that an EIR contain a statement briefly indicating the reasons that various possible significant effects of a project were determined not to be significant and were therefore not discussed in the EIR. Based on the analysis conducted in preparing this DEIR, impacts on agricultural resources and recreation associated with project implementation were found not to be significant. Although the project site currently includes areas of grazing land on the eastern property and parts of the western property, the project site does not include any designated prime farmland, unique farmland, or farmland of statewide importance. Also, the land use and zoning designations for these lands supports solid waste and industrial uses. No lands on the project site are designated for agricultural uses, and the proposed project would not conflict with existing zoning for agriculture use or with a Williamson Act contract. Also, the proposed project does not include uses that would disturb or disrupt existing recreational uses and would not be expected to substantially increase the demand on existing recreational resources. Although the project would increase employment within the region, this increase in employment would not be expected to result in the substantial physical deterioration of recreational facilities. Therefore, no further analysis of these topics is included in this DEIR.

21. EIR Preparers and Contributors

21.1 Western Placer Waste Management Authority

Ken Grehm, Executive Director

Rob Sandman, WPWMA Counsel

Kevin Bell, P.E., Deputy Executive Director

Eric Oddo, P.E., Program Manager

Stephanie Ulmer, Environmental Resources Specialist

Keith Schmidt, P.E., Senior Civil Engineer

21.2 Consultants

Jacobs

Bastasch, Mark: Noise

Bloomberg, Loren: Transportation

Bradford, Alan: Geology, Soils, and Paleontology; Hydrology and Water Quality

Carlson, Joseph: Geology, Soils, and Paleontology

Chau, Raizalyn: Transportation

Cosner, Matthew: Air Quality (LFG)

Curtis, Stephanie: Figure support

Daus, Tyson: Graphic Designer

Dickison, Melanie: Air Quality

Dunavent, Andrew: Air Quality

Fisher, Kevin: Biological Resources

Fraser, Shannon: Technical Editor

Frohning, John: Air Quality

Golles, David: Hazards, Hazardous Materials, and Wildfire

Goodrich, Janet, P.E.: Senior Technical Consultant, Program Manager

Grant, Kevin: Aesthetics, GIS Graphics

Hullinger, Carol: Document Publisher

Huxley, Doug: Air Quality and Greenhouse Gas Emission and Climate Change

Lafrenz, Estee: Air Quality, Greenhouse Gas Emission and Climate Change

Lee, Grace: Air Quality

Loofbourrow, Jennifer: Graphic Designer

Lopez, Lyndsey: Senior Technical Consultant, Deputy Program Manager

Mah-Hing, Greg: Financial Update for Preferred Project

Marek, Mia: Biological Resources

McManus, Ellen: Air Quality (LFG)

McRae, Jennifer: Utilities and Energy, Executive Summary, General Technical Support

Mooneyham, Joshua: Landfill graphics

Nez, Valisa: Senior Technical Consultant, CEQA Reviewer, EIR Project Manager

Norris, Jordan: Compost Operations and Permits

Pitzler, Dan: Financial Update for Preferred Project

Price, Heather: Cultural and Tribal Resources

Rudolph, Geralyne: Graphic Designer

Schwing, Elizabeth, P.E.: Air Quality, Greenhouse Gas Emission and Climate Change, Cumulative Impacts

Stephan, Michael: Visual Simulation

Sullivan, Pauline: Technical Editor

Todak, Jacqueline: Land Use and Planning, Public Services, Utilities and Energy

Vanderbilt, Pamela: Air Quality, Cumulative Impacts

Vann, Cinamon: Technical Editor

Zhuang, Hong: Air Quality

Douglas Environmental

Doug Brown: Senior Technical Consultant, CEQA Reviewer, Cumulative Impacts

Rincon Consultants, Inc.

Brenda Grogg Eells: Senior Technical Consultant, CEQA Reviewer, Introduction, Project Description, Approach, Aesthetics, Alternatives

Kearns & West

Julie Leimbach: Working Group Facilitator

Other Subcontractors

- Golder and Associates
- Integrated Waste Management Consulting, LLC
- JR Miller and Associates

Appendix A
NOP and Responses to Comments

Author	Comment		Response
Placer County Flood Control and Water Conservation District	1	Project has the potential to increase peak flow runoff downstream, increase volume of runoff downstream, overload the actual or designed capacity of existing stormwater and flood-carrying facilities	A discussion of the potential for the proposed project to result in stormwater impacts is addressed in Draft EIR Chapter 12, Hydrology and Water Quality.
Placer County Health & Human Services Environmental Health Division	2	Project shall comply with regulations required by LEA, CalRecycle, Central Valley RWQCB, and other applicable landfill and MRF regulations.	Regulations from these agencies and others for operation of a landfill and MRF are described in Draft EIR Chapter 1, Introduction and various resource sections as appropriate.
	3	EIR shall analyze potential impacts related to hazards and hazardous materials.	A discussion of the potential for the proposed project to result in impacts related to hazards and hazardous materials is addressed in Draft EIR Chapter 11, Hazards, Hazardous Materials, and Wildfire.
Placer County Executive Office	4	Fire and Emergency Services. Impacts related to the increased demand on fire services and emergency services should be analyzed in the EIR. Mitigation measures should be considered to mitigate impacts to County services, including participation in County Service Area Zone of Benefit, Community Facilities District or other funding mechanism.	A discussion of the potential for the proposed project to increase demand for fire and emergency services is included in Draft EIR Chapter 15, Public Services.
	5	Road Maintenance. Expanded landfill facilities may create impacts on the County's roadway system. Analysis should identify preferred truck traffic routes and associated impacts Analysis should propose mitigation of those impacts on the County's roadway system, including participation in a county service area zone of benefit or Community Facilities District or other funding mechanism.	A discussion of the potential for the proposed project to result in impacts on the County's roadway system is included in Draft EIR Chapters 15, Public Services, and 16, Transportation.
	6	Utilities. EIR should analyze impacts to sewer, water, recycled water, drainage, and wet utilities and propose mitigation measures to offset impacts.	A discussion of the potential for the proposed project to result in impacts to sewer, water, recycled water, drainage, and wet utilities is included in Draft EIR Chapter 17, Utilities and Energy.
	7	Odor. EIR should analyze odor impacts to adjacent property owners and identify feasible mitigation measures that utilize modern technology that may not have been in effect when the landfill began operations.	A discussion of potential odor impacts associated with the proposed project is included in Draft EIR Chapter 6, Air Quality.

Author	Comment		Response
	8	Air Quality. EIR should analyze the project's potential impacts to air quality in light of Sierra Club v. County of Fresno. This analysis is relevant not only to the increase in trip traffic but also to the potential increase in odors and proposed waste excavation.	The air quality analysis and a discussion of potential air quality impacts on public health from the proposed project are included in Draft EIR Chapter 6, Air Quality.
	9	Traffic. EIR must analyze the direct and indirect impacts associated with potential shifts in ingress/egress as well as the proposed new road crossing.	A discussion of the approach to evaluating traffic impacts for the proposed project, including a discussion of traffic hazards, is included in Draft EIR Chapter 16, Transportation.
	10	Aesthetics. EIR should analyze impacts to visual aesthetics and proposed feasible mitigation to mitigate impacts.	A discussion of the potential for the proposed project to result in impacts to visual aesthetics is included in Draft EIR Chapter 5, Aesthetics.
	11	Land Use. EIR should analyze land use conflicts under the existing Sunset Plan as well as the proposed Sunset Area Plan Update and Placer Ranch Specific Plan.	A discussion of the potential for the proposed project to result in conflicts with local plans, including the Sunset Area Plan and Placer Ranch Specific Plan, is included in Draft EIR Chapter 13, Land Use and Planning.
	12	Cumulative Impacts. EIR must include and consider the proposed Sunset Area Plan Update and Placer Ranch Specific Plan (SAPUPRSP), in particular the increase in traffic in light of the SAPUPRSP traffic analysis.	A discussion of cumulative impacts associated with the proposed project considering the Sunset Area Plan and Placer Ranch Specific Plan is included in Draft EIR Chapter 19, Cumulative Impacts.
Native American Heritage Commission	1	Requirements of AB 52	WPWMA is in consultation with the United Auburn Indian Community, consistent with the requirements of AB 52. Additionally, a discussion of the potential for the proposed project to result in impacts to tribal cultural resources is included in Draft EIR Chapter 8, Cultural and Tribal Cultural Resources.
	2	Requirements of SB 18	SB 18 is not applicable to the proposed project.
	3	NAHC Recommendations for Cultural Resources Assessments	A discussion of the potential for the proposed project to result in impacts to cultural resources is included in Draft EIR Chapter 8, Cultural and Tribal Cultural Resources.

Author	Comment		Response
Central Valley Regional Water Quality Control Board	1	All wastewater discharges must comply with the Antidegradation Policy (State Water Board Resolution 68-16) and the Antidegradation Implementation Policy contained in the Basin Plan. EIR should evaluate potential impacts to both surface and groundwater quality.	A discussion of the potential for the proposed project to result in impacts to surface and groundwater quality is included in Draft EIR Chapter 12, Hydrology and Water Quality.
	2	Construction Storm Water General Permit	A discussion of the potential for the proposed project to result in impacts to surface and groundwater quality is included in Draft EIR Chapter 12, Hydrology and Water Quality.
	3	Phase I and II Municipal Separate Storm Sewer System (MS4) Permits	A discussion of the potential for the proposed project to result in impacts to surface and groundwater quality is included in Draft EIR Chapter 12, Hydrology and Water Quality.
	4	Industrial Storm Water General Permit	A discussion of the potential for the proposed project to result in impacts to surface and groundwater quality is included in Draft EIR Chapter 12, Hydrology and Water Quality.
	5	Clean Water Act Section 404 Permit	A discussion of the potential for the proposed project to result in impacts to waters of the United States is included in Draft EIR Chapter 7, Biological Resources.
	6	Clean Water Act Section 401 Permit – Water Quality Certification	A discussion of the potential for the proposed project to result in impacts to waters of the state is included in Draft EIR Chapter 7, Biological Resources.
	7	Waste Discharge Requirements – Discharges to Waters of the State	A discussion of the potential for the proposed project to result in impacts to surface and groundwater quality is included in Draft EIR Chapter 12, Hydrology and Water Quality.
	8	Dewatering Permit	A discussion of the potential for the proposed project to result in impacts to surface and groundwater quality is included in Draft EIR Chapter 12, Hydrology and Water Quality.
	9	Regulatory Compliance for Commercial Irrigated Agriculture	The proposed project does not include Commercial Irrigated Agriculture.
	10	Limited Threat General NPDES Permit	A discussion of the potential for the proposed project to result in impacts to surface and groundwater quality is included in Draft EIR Chapter 12, Hydrology and Water Quality.

Author	Comment		Response
	11	NPDES Permit	A discussion of the potential for the proposed project to result in impacts to surface and groundwater quality is included in Draft EIR Chapter 12, Hydrology and Water Quality.
Trainor Fairbrook for United Auburn Indian Community	1	EIR should explain the future process for evaluating the project-level environmental impacts of the complementary and programmatic elements.	The process for evaluating project-level environmental impacts of the complementary and programmatic elements is described in Draft EIR Chapter 4, Approach.
	2	EIR should provide additional details of complementary and programmatic elements.	Complementary and programmatic elements are presented in Draft EIR Chapter 3, Project Description, and evaluated in the various resource sections as appropriate.
	3	Project description should define whether windrow composting will continue to be used or whether other methods of composting are being considered for the expanded composting operations.	The expanded and redesigned organics management operation for Plan Concepts 1 and 2 is included in Draft EIR Chapter 3, Project Description, in Sections 3.5.2.2 and 3.6.2.2.
	4	Project description should define the source and method of daily cover or alternative daily cover (ADC).	A discussion of the use of ADC is included in Draft EIR Chapter 1, Introduction, and Chapter 3, Project Description.
	5	Aesthetics. EIR should include visual simulations, particularly views from the east along Athens Avenue.	A discussion of the potential for the proposed project to result in impacts to visual aesthetics is included in Draft EIR Chapter 5, Aesthetics.
	6	Air Quality. Evaluation should consider odor impacts to surrounding uses, including the entertainment district in the proposed Sunset Area Plan.	A discussion of potential odor impacts associated with the proposed project is included in Draft EIR Chapter 6, Air Quality.
	7	Traffic. EIR should discuss the volume and distribution of trips from haul trucks under existing conditions and future conditions. EIR should discuss future traffic impacts with and without Placer Parkway, if the first phase of Placer Parkway is not anticipated to be constructed when the project is implemented.	A discussion of traffic approach is presented in Draft EIR Chapter 16, Transportation, and cumulative impacts are discussed in Chapter 19, Cumulative Impacts.
	8	Traffic. EIR should discuss what measures will be implemented to prevent haul truck traffic on Athens Avenue in the entertainment district of the Sunset Area Plan. (Haul truck traffic on Athens Avenue in this area is incompatible with increased pedestrian activity.)	A discussion of traffic approach is presented in Chapter 16, Transportation, and cumulative impacts are discussed in Chapter 19, Cumulative Impacts.

Author	Comment		Response
	9	Cultural and Tribal Resources. EIR should discuss the potential to impact cultural and tribal resources and the mitigation that will be employed during any proposed excavation activities.	A discussion of potential impacts of the proposed project on cultural and tribal resources is included in Draft EIR Chapter 8, Cultural and Tribal Cultural Resources.
	10	Cumulative. Cumulative impacts should consider the proposed buildout of the Sunset Area Plan, Placer Ranch, and Placer Parkway.	A discussion of the potential cumulative impacts for the proposed project is included in Draft EIR Chapter 19, Cumulative Impacts.
Caltrans	1	Highway Operations ▪ Provide existing and project buildout vehicular and truck trip generations volumes, distribution patterns and comparison. ▪ Analyze State Route (SR)-65 ramp intersections with Sunset Boulevard and Twelve Bridges Drive under both without and with project conditions. The analysis should include intersection delay Level of Service and queue under existing and project buildout conditions, per Caltrans Traffic Impact Study Guide. Caltrans may request analysis of additional facilities or reduce scope based on the expected added volumes to State Highway System. ▪ Analyze the feasibility of the eastbound Twelve Bridges Drive direct on-ramp to southbound SR65 construction, per the previously prepared cooperative agreement. ▪ Analyze without and with project Vehicle Miles Traveled (VMT).	A discussion of traffic approach is presented in Draft EIR Chapter 16, Transportation.

Author	Comment		Response
	2	Freeway Assuming the operation of a landfill, the proposed project will generate some number of trips in addition to some large truck trips; therefore, it will have an impact on the State Highway System. This landfill serves the cities of Roseville, Rocklin and Loomis, SR-65 often operates at or near capacity often. Therefore, Caltrans is requesting for a Transportation Impact Study (TIS) which should include the following: ▪ The Caltrans future Route 65 HOV project (EA 03-1F170) should be included in the future analysis. ▪ Analysis of NB 65 and SB 65 offramp terminals at Galleria Blvd., Pleasant Grove Blvd., Blue Oaks Blvd., Sunset Blvd., Whitney Ranch Pkwy (NB only), Twelve Bridges Or., Lincoln Blvd., and Ferrari Ranch Rd. interchanges. ▪ Include offramp queue length analysis for the Junction of Route 65 and 1-80. ▪ Include offramp queue length analysis for Galleria Blvd., Pleasant Grove Blvd, Blue Oaks Blvd., Sunset Blvd., Whitney Ranch Pkwy (NB only), Twelve Bridges Dr., Lincoln Blvd., and Ferrari Ranch Rd. interchanges. ▪ Analysis of merge and diverge for the Junction of Route 65 and 1-80. ▪ Analysis of merge and diverge for Galleria Blvd., Pleasant Grove Blvd., Blue Oaks Blvd., Sunset Blvd., Whitney Ranch Pkwy, Twelve Bridges Dr., Lincoln Blvd., and Ferrari Ranch Rd. interchanges. ▪ The Transportation Impact Study should include the VMT analysis which includes VMT per capita, and the average VMT per capita for the surrounding area. ▪ Evaluation of elements of multi-modal transportation system including bicycle paths, pedestrian and public transportation facilities.	A discussion of traffic approach is presented in Draft EIR Chapter 16, Transportation.

Appendix B
Visual Resources Rating Forms

Visual Resource Survey:	Existing Conditions		
KOP Location:	Sun City Lincoln Hills Community Center	Viewpoint:	KOP 1
Landscape Unit:	N/A	Date:	10/1/19
Viewpoint Description (Figure Caption):	Existing view from near the Sun City Lincoln Hills Community Center looking southwest toward the landfill.		
Photo Orientation:	Southwest		
Viewer Position:	_____ Inferior ___X___ Level _____ Superior		

View	Notes
Foreground (0 - 1/2 mile)	The viewpoint is perched on the side of a slope and looks out across the green, grassy links of the Lincoln Hills Golf Club. Large oak and pine tree varieties are interspersed throughout the course. A sand trap is seen on the right hand side of the view. Large homes with red and brown tile roofs are located adjacent to the golf course and are part of the Sun City Lincoln Hills development.
Middleground (1/2 - 4 miles)	Large portions of the middleground are screened from view by intervening trees and residences. What is visible consists mostly of additional residential development and tan-colored open space. The seventeen story tower of the Thunder Valley Casino Resort and its large parking structure are seen at center left. The existing landfill is difficult to distinguish but it is visible just to the right of the casino.
Background (> 4 miles)	Mountains that form the western border of the Central Valley are located approximately 40 miles from KOP 1 and are faintly visible in the background of the image.

Vividness		
Feature	*Score**	*Notes*
Landform	5.5	Consists of gently rolling terrain that generally slopes downward to the location of the existing landfill. A range of distant mountains is faintly visible in the background.
Vegetation	5.5	The manicured grounds of the Lincoln Hills Golf Club are seen in the immediate foreground and are composed of the freshly cut green, grassy fairway, interspersed with the occasional large pine or oak tree and sand trap. A variety of tree tops are visible in the middleground, however, the distance at which they are seen makes it difficult to distinguish species or much other detail. Bits of tan-yellow, chaparral covered open space are also distantly visible.
Water Feature	N/A	
Human-Made	5.5	The view is heavily influenced by human development. The natural-appearing but human-made golf links are a visually attractive and dominant element of the view. Housing that surrounds the golf course is neatly and methodically arranged. In the middleground, the Thunder Valley Casino Resort tower and parking garage are visible at center left.
Overall	**5.5**	

Intactness		
Overall	**6**	Though heavily influenced by human development, intactness remains high, with the casino tower and parking garage presenting as minor encroaching elements.

Unity		
Overall	**6**	The view is a generally satisfying blend of natural and human-built visual elements.

Overall Visual Quality Score	5.8	

*Score Key:
1 - Very Low; 2 - Low; 3 - Moderately Low; 4 - Average; 5 - Moderately High; 6 - High; 7 - Very High

Visual Resource Survey:	Proposed Project (Plan Concept 1 2050)		
KOP Location:	Sun City Lincoln Hills Community Center	Viewpoint:	KOP 1
Landscape Unit:	N/A	Date:	10/1/19
Viewpoint Description (Figure Caption):	Simulated view of Plan Concept 1 2050 from near the Sun City Lincoln Hills Community Center looking southwest toward the landfill.		
Photo Orientation:	Southwest		
Viewer Position:	_____ Inferior ___X___ Level _____ Superior		

View	Notes
Foreground (0 - 1/2 mile)	No change.
Middleground (1/2 - 4 miles)	The landfill surface is visible in the center of the view, four miles from the KOP location, but is largely screened by intervening trees.
Background (> 4 miles)	Distant mountains are partially obscured by the landfill surface.

Vividness		
Feature	*Score**	*Notes*
Landform	5.5	The landfill surface introduces a subtle change to the existing landform but the lightly sloped landfill is generally consistent with the topography of the area. Distant mountains will be partially obscured by the landfill surface.
Vegetation	5.5	Increased visibility of naturally occurring vegetation on the slopes of the landfill.
Water Feature	N/A	
Human-Made	5.5	No changes to the existing human-made visual elements. The landfill expansion would increase the visibility of a natural-appearing but human-built feature.
Overall	**5.5**	

Intactness		
Overall	**5.5**	Slight reduction in intactness due to the expansion of the landfill, an intrusive element but one that is visible at a moderate distance and partially screened.

Unity		
Overall	**6**	No change.

Overall Visual Quality Score	5.7	

*Score Key:
1 - Very Low; 2 - Low; 3 - Moderately Low; 4 - Average; 5 - Moderately High; 6 - High; 7 - Very High

Visual Resource Survey:	Proposed Project (Plan Concept 1 Full Buildout)		
KOP Location:	Sun City Lincoln Hills Community Center	Viewpoint:	KOP 1
Landscape Unit:	N/A	Date:	10/1/19
Viewpoint Description (Figure Caption):	Simulated view of Plan Concept 1 Full Buildout from near the Sun City Lincoln Hills Community Center looking southwest toward the landfill.		
Photo Orientation:	Southwest		
Viewer Position:	_____ Inferior ___X___ Level _____ Superior		

View	Notes
Foreground (0 - 1/2 mile)	No change.
Middleground (1/2 - 4 miles)	The landfill footprint is larger and more visible compared to Plan Concept 1 2050; however, considerable screening of the landfill from intervening trees remains.
Background (> 4 miles)	Greater portions of the distant mountain range are obscured by the landfill as compared to Plan Concept 1 2050.

Vividness		
Feature	*Score**	*Notes*
Landform	5	The larger Plan Concept 1 Full Buildout footprint increases the visibility of the landfill and obscures greater portions of the distant mountain range. The effect on overall landform vividness is limited, however, due to distance and intervening vegetation.
Vegetation	5.5	No change compared to Plan Concept 1 2050.
Water Feature	N/A	
Human-Made	5.5	Increased visibility of the landfill compared to Plan Concept 1 2050.
Overall	**5.3**	

Intactness		
Overall	**5**	Intactness continues to decrease as the landfill expands toward Full Buildout.

Unity		
Overall	**5.5**	Slight reduction in unity due to the increased visibility of the landfill.

Overall Visual Quality Score	5.3	

*Score Key:
1 - Very Low; 2 - Low; 3 - Moderately Low; 4 - Average; 5 - Moderately High; 6 - High; 7 - Very High

Visual Resource Survey:	Existing Conditions		
KOP Location:	Sun City Lincoln Hills Community Center	Viewpoint:	KOP 1
Landscape Unit:	N/A	Date:	10/1/19
Viewpoint Description (Figure Caption):	Existing view from near the Sun City Lincoln Hills Community Center looking southwest toward the landfill.		
Photo Orientation:	Southwest		
Viewer Position:	_____ Inferior ___X___ Level _____ Superior		

View	Notes
Foreground (0 - 1/2 mile)	The viewpoint is perched on the side of a slope and looks out across the green, grassy links of the Lincoln Hills Golf Club. Large oak and pine tree varieties are interspersed throughout the course. A sand trap is seen on the right hand side of the view. Large homes with red and brown tile roofs are located adjacent to the golf course and are part of the Sun City Lincoln Hills development.
Middleground (1/2 - 4 miles)	Large portions of the middleground are screened from view by intervening trees and residences. What is visible consists mostly of additional residential development and tan-colored open space. The seventeen story tower of the Thunder Valley Casino Resort and its large parking structure are seen at center left. The existing landfill is difficult to distinguish but it is visible just to the right of the casino.
Background (> 4 miles)	Mountains that form the western border of the Central Valley are located approximately 40 miles from KOP 1 and are faintly visible in the background of the image.

Vividness		
Feature	*Score**	*Notes*
Landform	5.5	Consists of gently rolling terrain that generally slopes downward to the location of the existing landfill. A range of distant mountains is faintly visible in the background.
Vegetation	5.5	The manicured grounds of the Lincoln Hills Golf Club are seen in the immediate foreground and are composed of the freshly cut green, grassy fairway, interspersed with the occasional large pine or oak tree and sand trap. A variety of tree tops are visible in the middleground, however, the distance at which they are seen makes it difficult to distinguish species or much other detail. Bits of tan-yellow, chaparral covered open space are also distantly visible.
Water Feature	N/A	
Human-Made	5.5	The view is heavily influenced by human development. The natural-appearing but human-made golf links are a visually attractive and dominant element of the view. Housing that surrounds the golf course is neatly and methodically arranged. In the middleground, the Thunder Valley Casino Resort tower and parking garage are visible at center left.
Overall	**5.5**	

Intactness		
Overall	**6**	Though heavily influenced by human development, intactness remains high, with the casino tower and parking garage presenting as minor encroaching elements.

Unity		
Overall	**6**	The view is a generally satisfying blend of natural and human-built visual elements.

Overall Visual Quality Score	5.8	

*Score Key:
1 - Very Low; 2 - Low; 3 - Moderately Low; 4 - Average; 5 - Moderately High; 6 - High; 7 - Very High

Visual Resource Survey:	Proposed Project (Plan Concept 2 2050)		
KOP Location:	Sun City Lincoln Hills Community Center	Viewpoint:	KOP 1
Landscape Unit:	N/A	Date:	10/1/19
Viewpoint Description (Figure Caption):	Simulated view of Plan Concept 2 2050 from near the Sun City Lincoln Hills Community Center looking southwest toward the landfill.		
Photo Orientation:	Southwest		
Viewer Position:	_____ Inferior ___X___ Level _____ Superior		

View	Notes
Foreground (0 - 1/2 mile)	No change.
Middleground (1/2 - 4 miles)	The southeastern landfill surface is visible in the center of the view, four miles from the KOP location, but is largely screened by intervening trees. The northwestern portion of the Plan Concept 2 2050 landfill surface is fully obscured by trees.
Background (> 4 miles)	Distant mountains are partially obscured by the landfill surface.

Vividness		
Feature	*Score**	*Notes*
Landform	5.5	The landfill surface introduces a subtle change to the existing landform but the lightly sloped landfill is generally consistent with the topography of the area. Distant mountains will be partially obscured by the landfill surface.
Vegetation	5.5	Increased visibility of naturally occurring vegetation on the slopes of the landfill.
Water Feature	N/A	
Human-Made	5.5	No changes to the existing human-made visual elements. The landfill expansion would increase the visibility of a natural-appearing but human-built feature. Under Plan Concept 2, the two distinct landfill footprints would increase the likelihood that an observer would recognize the landfill as a human-made and not naturally occurring topographic feature.
Overall	**5.5**	

Intactness		
Overall	**6**	No change.

Unity		
Overall	**6**	No change.

Overall Visual Quality Score	5.8	

*Score Key:
1 - Very Low; 2 - Low; 3 - Moderately Low; 4 - Average; 5 - Moderately High; 6 - High; 7 - Very High

Visual Resource Survey:	Proposed Project (Plan Concept 2 Full Buildout)		
KOP Location:	Sun City Lincoln Hills Community Center	Viewpoint:	KOP 1
Landscape Unit:	N/A	Date:	10/1/19
Viewpoint Description (Figure Caption):	Simulated view of Plan Concept 2 Full Buildout from near the Sun City Lincoln Hills Community Center looking southwest toward the landfill.		
Photo Orientation:	Southwest		
Viewer Position:	_____ Inferior ___X___ Level _____ Superior		

View	Notes
Foreground (0 - 1/2 mile)	No change.
Middleground (1/2 - 4 miles)	Both of the landfill footprints of the Plan Concept 2 design are larger and more visible compared to Plan Concept 2 2050; however, considerable screening of the landfill from intervening trees remains.
Background (> 4 miles)	Greater portions of the distant mountain range are obscured by the landfill as compared to Plan Concept 2 2050.

Vividness		
Feature	*Score**	*Notes*
Landform	5	The larger Plan Concept 2 Full Buildout footprint increases the visibility of the landfill and obscures greater portions of the distant mountain range. The effect on overall landform vividness is limited, however, due to distance and intervening vegetation.
Vegetation	5.5	No change compared to Plan Concept 2 2050.
Water Feature	N/A	
Human-Made	5	Increased visibility of the landfill compared to Plan Concept 2 2050.
Overall	**5.2**	

Intactness		
Overall	**5.5**	Slight reduction in intactness due to the expansion of the landfill, an intrusive element but one that is visible at a moderate distance and partially screened.

Unity		
Overall	**5.5**	Slight reduction in unity due to the increased visibility of the landfill.

Overall Visual Quality Score	5.4	

*Score Key:
1 - Very Low; 2 - Low; 3 - Moderately Low; 4 - Average; 5 - Moderately High; 6 - High; 7 - Very High

Visual Resource Survey:	*Existing Conditions*		
KOP Location:	**Twelve Bridges Drive**	Viewpoint:	**KOP 2**
Landscape Unit:	N/A	Date:	10/1/19
Viewpoint Description (Figure Caption):	Existing view from Twelve Bridges Drive looking southwest toward the landfill.		
Photo Orientation:	Southwest		
Viewer Position:	_____ Inferior ___X___ Level _____ Superior		

View	***Notes***	
Foreground (0 - 1/2 mile)	An open field of dry grasses extends out from the viewpoint. The north-south aligned Industrial Avenue crosses the image from left to right. Large trees, an electrical distribution line, and a railroad track that parallel Industrial Avenue are also visible.	
Middleground (1/2 - 4 miles)	The seventeen story tower and parking structure of the Thunder Valley Casino Resort dominate the left hand side of the view. The existing landfill surface is visible in the center of the image, though it is partially screened by existing vegetation. Additional open space, scattered tall trees, and electrical distribution infrastructure are seen to the right of the landfill.	
Background (> 4 miles)	Mountains that form the western border of the Central Valley are located approximately 40 miles from KOP 2 and are faintly visible in the background of the right half of the image.	
Vividness		
Feature	***Score****	***Notes***
Landform	3	Mostly flat to slightly rolling landform with a mountain range faintly visible in the far distance.
Vegetation	2.5	Dried tan and ochre grasses and shrubs blanket the open spaces that dominate the view. Large oak and eucalyptus trees are scattered throughout the view, generally along roadsides and as screening for industrial land uses in the vicinity.
Water Feature	N/A	
Human-Made	3	The seventeen story tower and parking structure of the Thunder Valley Casino Resort are the most visible human-made elements. Also discernible, however, are the existing landfill, Industrial Avenue, a railroad, and an electrical distribution line.
Overall	**2.8**	
Intactness		
Overall	**4**	Overall intactness is average due to several encroaching elements, such as the casino tower and parking structure and the electrical distribution line.
Unity		
Overall	**4**	Unity is average, disrupted by the human-made elements of the view that contrast with the otherwise open spaces.
Overall Visual Quality Score	**3.6**	

*Score Key:
1 - Very Low; 2 - Low; 3 - Moderately Low; 4 - Average; 5 - Moderately High; 6 - High; 7 - Very High

Visual Resource Survey:	*Proposed Project (Plan Concept 1 2050)*		
KOP Location:	**Twelve Bridges Drive**	Viewpoint:	**KOP 2**
Landscape Unit:	N/A	Date:	10/1/19
Viewpoint Description (Figure Caption):	Simulated view of Plan Concept 1 2050 from Twelve Bridges Drive looking southwest toward the landfill.		
Photo Orientation:	Southwest		
Viewer Position:	_____ Inferior ___X___ Level _____ Superior		

View	***Notes***	
Foreground (0 - 1/2 mile)	No change.	
Middleground (1/2 - 4 miles)	The expanded and heightened landfill is visible to the right of the casino tower.	
Background (> 4 miles)	No change.	
Vividness		
Feature	***Score****	***Notes***
Landform	3	The expanded landfill would be taller and more visible than the existing condition, however, it would not detract from the already moderately low memorability of the surrounding landform.
Vegetation	2.5	Vegetation on the slopes of the expanded landfill would generally be consistent in color, texture, and size with the vegetation of surrounding open spaces.
Water Feature	N/A	
Human-Made	3	No changes to the existing human-made visual elements. The landfill expansion would increase the visibility of a natural-appearing but human-built feature. Intervening vegetation would provide limited screening of the landfill.
Overall	**2.8**	
Intactness		
Overall	**3.5**	Slight reduction in intactness due to the expansion of the landfill, an intrusive element.
Unity		
Overall	**3.5**	The sloped sides of the landfill would be naturally vegetated and appear similar to surrounding open space. Given the low level of contrast, overall visual unity of the view would be only slightly reduced.
Overall Visual Quality Score	**3.3**	

*Score Key:
1 - Very Low; 2 - Low; 3 - Moderately Low; 4 - Average; 5 - Moderately High; 6 - High; 7 - Very High

Visual Resource Survey:	*Proposed Project (Plan Concept 1 Full Buildout)*		
KOP Location:	**Twelve Bridges Drive**	Viewpoint:	**KOP 2**
Landscape Unit:	N/A	Date:	10/1/19
Viewpoint Description (Figure Caption):	Simulated view of Plan Concept 1 Full Buildout from Twelve Bridges Drive looking southwest toward the landfill.		
Photo Orientation:	Southwest		
Viewer Position:	_____ Inferior ___X___ Level _____ Superior		

View	***Notes***	
Foreground (0 - 1/2 mile)	No change.	
Middleground (1/2 - 4 miles)	The landfill footprint is larger and more visible compared to Plan Concept 1 2050.	
Background (> 4 miles)	The expanded landfill may start to obscure some of the distant mountains.	
Vividness		
Feature	***Score****	***Notes***
Landform	2.5	There would be a slight reduction in vividness of the landform given the landfill would screen portions of distant mountain ranges.
Vegetation	2.5	No change compared to Plan Concept 1 2050.
Water Feature	N/A	
Human-Made	3	No change compared to Plan Concept 1 2050.
Overall	**2.7**	
Intactness		
Overall	**3**	The expanded landfill at Full Buildout is increasingly visible and also obscures small portions of the distant mountain range, degrading overall intactness.
Unity		
Overall	**3.5**	No change compared to Plan Concept 1 2050.
Overall Visual Quality Score	**3.1**	

*Score Key:
1 - Very Low; 2 - Low; 3 - Moderately Low; 4 - Average; 5 - Moderately High; 6 - High; 7 - Very High

Visual Resource Survey:	*Existing Conditions*		
KOP Location:	**Twelve Bridges Drive**	Viewpoint:	**KOP 2**
Landscape Unit:	N/A	Date:	10/1/19
Viewpoint Description (Figure Caption):	Existing view from Twelve Bridges Drive looking southwest toward the landfill.		
Photo Orientation:	Southwest		
Viewer Position:	_____ Inferior ___X___ Level _____ Superior		

View	***Notes***
Foreground (0 - 1/2 mile)	An open field of dry grasses extends out from the viewpoint. The north-south aligned Industrial Avenue crosses the image from left to right. Large trees, an electrical distribution line, and a railroad track that parallel Industrial Avenue are also visible.
Middleground (1/2 - 4 miles)	The seventeen story tower and parking structure of the Thunder Valley Casino Resort dominate the left hand side of the view. The existing landfill surface is visible in the center of the image, though it is partially screened by existing vegetation. Additional open space, scattered tall trees, and electrical distribution infrastructure are seen to the right of the landfill.
Background (> 4 miles)	Mountains that form the western border of the Central Valley are located approximately 40 miles from KOP 2 and are faintly visible in the background of the right half of the image.

Vividness		
Feature	***Score****	***Notes***
Landform	3	Mostly flat to slightly rolling landform with a mountain range faintly visible in the far distance.
Vegetation	2.5	Dried tan and ochre grasses and shrubs blanket the open spaces that dominate the view. Large oak and eucalyptus trees are scattered throughout the view, generally along roadsides and as screening for industrial land uses in the vicinity.
Water Feature	N/A	
Human-Made	3	The seventeen story tower and parking structure of the Thunder Valley Casino Resort are the most visible human-made elements. Also discernible, however, are the existing landfill, Industrial Avenue, a railroad, and an electrical distribution line.
Overall	**2.8**	
Intactness		
Overall	**4**	Overall intactness is average due to several encroaching elements, such as the casino tower and parking structure and the electrical distribution line.
Unity		
Overall	**4**	Unity is average, disrupted by the human-made elements of the view that contrast with the otherwise open spaces.
Overall Visual Quality Score	**3.6**	

*Score Key:
1 - Very Low; 2 - Low; 3 - Moderately Low; 4 - Average; 5 - Moderately High; 6 - High; 7 - Very High

Visual Resource Survey:	*Proposed Project (Plan Concept 2 2050)*		
KOP Location:	**Twelve Bridges Drive**	Viewpoint:	**KOP 2**
Landscape Unit:	N/A	Date:	10/1/19
Viewpoint Description (Figure Caption):	Simulated view of Plan Concept 2 2050 from Twelve Bridges Drive looking southwest toward the landfill.		
Photo Orientation:	Southwest		
Viewer Position:	_____ Inferior ___X___ Level _____ Superior		

View	***Notes***
Foreground (0 - 1/2 mile)	No change.
Middleground (1/2 - 4 miles)	Both the southeastern and northwestern landfill footprints are visible to the right of the casino tower, with the southeastern portion closer to the viewpoint and more visible.
Background (> 4 miles)	No change.

Vividness		
Feature	***Score****	***Notes***
Landform	3	The expanded landfill would be taller and more visible than the existing condition, however, it would not detract from the already moderately low memorability of the surrounding landform.
Vegetation	2.5	Vegetation on the slopes of the expanded landfill would generally be consistent in color, texture, and size with the vegetation of surrounding open spaces.
Water Feature	N/A	
Human-Made	3	No changes to the existing human-made visual elements. The landfill expansion would increase the visibility of a natural-appearing but human-built feature. Intervening vegetation would provide limited screening of the landfill.
Overall	**2.8**	
Intactness		
Overall	**3.5**	Slight reduction in intactness due to the expansion of the landfill, an intrusive element.
Unity		
Overall	**3.5**	The sloped sides of the landfill would be naturally vegetated and appear similar to surrounding open space. Given the low level of contrast, overall visual unity of the view would be only slightly reduced.
Overall Visual Quality Score	**3.3**	

*Score Key:
1 - Very Low; 2 - Low; 3 - Moderately Low; 4 - Average; 5 - Moderately High; 6 - High; 7 - Very High

Visual Resource Survey:	*Proposed Project (Plan Concept 2 Full Buildout)*		
KOP Location:	**Twelve Bridges Drive**	Viewpoint:	**KOP 2**
Landscape Unit:	N/A	Date:	10/1/19
Viewpoint Description (Figure Caption):	Simulated view of Plan Concept 2 Full Buildout from Twelve Bridges Drive looking southwest toward the landfill.		
Photo Orientation:	Southwest		
Viewer Position:	_____ Inferior ___X___ Level _____ Superior		

View	***Notes***
Foreground (0 - 1/2 mile)	No change.
Middleground (1/2 - 4 miles)	The two landfill footprints are larger and more visible compared to Plan Concept 2 2050.
Background (> 4 miles)	Views of the mountain ranges in the background are greatly obscured by the expanded landfill.

Vividness		
Feature	***Score****	***Notes***
Landform	2	The size and visibility of the landfill increases compared to Plan Concept 2 2050, fully obscuring the distant mountain ranges.
Vegetation	2.5	No change compared to Plan Concept 2 2050.
Water Feature	N/A	
Human-Made	2.5	Increased visibility of the landfill compared to Plan Concept 2 2050, with the landfill becoming a dominant element of the view.
Overall	**2.3**	
Intactness		
Overall	**3**	Intactness continues to decrease as the landfill expands toward Full Buildout. The expanded landfill would screen views toward distant mountains, also reducing intactness.
Unity		
Overall	**3.5**	No change compared to Plan Concept 2 2050.
Overall Visual Quality Score	**2.9**	

*Score Key:
1 - Very Low; 2 - Low; 3 - Moderately Low; 4 - Average; 5 - Moderately High; 6 - High; 7 - Very High

Visual Resource Survey:	*Existing Conditions*		
KOP Location:	**Athens Avenue**	Viewpoint:	**KOP 3**
Landscape Unit:	N/A	Date:	10/1/19
Viewpoint Description (Figure Caption):	Existing view from Athens Avenue looking west toward the landfill.		
Photo Orientation:	West		
Viewer Position:	_____ Inferior ___X___ Level _____ Superior		

View	***Notes***
Foreground (0 - 1/2 mile)	South of Athens Avenue on the left side of the image, an open field of dry grasses extends out from the viewpoint. A row of electrical distribution poles cuts across the field from left to right. The Thunder Valley Casino Resort, with its large parking structure and seventeen story tower is located adjacent to Athens Avenue on the right hand side of the view. Another electrical distribution line parallels Athens Avenue, heading away from the viewpoint.
Middleground (1/2 - 4 miles)	The slopes of the existing landfill and a large warehouse facility associated with the landfill are visible in the distance to the left of Athens Avenue. Beyond the landfill, an electric transmission line crosses the view from left to right, partially screened by the landfill.
Background (> 4 miles)	Mountains that form the western border of the Central Valley are located approximately 40 miles from KOP 3 and are faintly visible in the background of the image to the left of the existing landfill.

Vividness		
Feature	***Score****	***Notes***
Landform	2	Land in the view is generally flat, with only a slight rise in elevation provided by the existing landfill. Distant mountains are only very faintly seen far in the background.
Vegetation	2	Dried tan and ochre grasses and shrubs blanket the open spaces that dominate the left hand side of the view. Ornamental vegetation and green grass lawns front the Thunder Valley Casino Resort.
Water Feature	N/A	
Human-Made	2	The view is heavily influenced by human-made elements. The large casino development, Athens Avenue and associated lighting and signage, and the row of electrical distribution poles fully occupy the right hand side of the image. The left side, at first glance, appears less developed; however, upon closer inspection, one detects the existing landfill and electrical distribution and transmission lines.
Overall	**2.0**	
Intactness		
Overall	**3**	Overall intactness is moderately low due to many encroaching elements, such as the casino development, the electrical distribution lines and the existing landfill.
Unity		
Overall	**2.5**	The human-made structures of the casino property as well as Athens Avenue and associated infrastructure are a sharp contrast to the open spaces south of Athens Avenue. Visual unity is low to moderately low.
Overall Visual Quality Score	**2.5**	

*Score Key:
1 - Very Low; 2 - Low; 3 - Moderately Low; 4 - Average; 5 - Moderately High; 6 - High; 7 - Very High

Visual Resource Survey:	*Proposed Project (Plan Concept 1 2050)*		
KOP Location:	**Athens Avenue**	Viewpoint:	**KOP 3**
Landscape Unit:	N/A	Date:	10/1/19
Viewpoint Description (Figure Caption):	Simulated view of Plan Concept 1 2050 from Athens Avenue looking west toward the landfill.		
Photo Orientation:	West		
Viewer Position:	_____ Inferior ___X___ Level _____ Superior		

View	***Notes***
Foreground (0 - 1/2 mile)	No change.
Middleground (1/2 - 4 miles)	The expanded and heightened landfill is visible on the left hand side of the view.
Background (> 4 miles)	No change.

Vividness		
Feature	***Score****	***Notes***
Landform	2	The expanded and heightened landfill would be a noticeable change to the landscape but given the low level of visual interest provided by the current topography, there would not be a reduction in the vividness of the landform.
Vegetation	2	Vegetation on the slopes of the expanded landfill would generally be consistent in color, texture, and size with the vegetation of surrounding open spaces.
Water Feature	N/A	
Human-Made	2	The expansion would increase the visibility of the landfill but there would be no changes to the other existing human-made visual elements. In this location, there is no existing vegetation that would provide partial screening of the landfill.
Overall	**2.0**	
Intactness		
Overall	**2.5**	Slight reduction in intactness due to the expansion of the landfill, an intrusive element.
Unity		
Overall	**2**	The sloped sides of the landfill would be naturally vegetated and appear similar to surrounding open space. Given the low level of contrast with the open spaces south of Athens Avenue, overall visual unity of the view would be only slightly reduced.
Overall Visual Quality Score	**2.2**	

*Score Key:
1 - Very Low; 2 - Low; 3 - Moderately Low; 4 - Average; 5 - Moderately High; 6 - High; 7 - Very High

Visual Resource Survey:	*Proposed Project (Plan Concept 1 Full Buildout)*		
KOP Location:	**Athens Avenue**	Viewpoint:	**KOP 3**
Landscape Unit:	N/A	Date:	10/1/19
Viewpoint Description (Figure Caption):	Simulated view of Plan Concept 1 Full Buildout from Athens Avenue looking west toward the landfill.		
Photo Orientation:	West		
Viewer Position:	_____ Inferior ___X___ Level _____ Superior		

View	***Notes***
Foreground (0 - 1/2 mile)	No change.
Middleground (1/2 - 4 miles)	The landfill footprint is larger and more visible compared to Plan Concept 1 2050.
Background (> 4 miles)	No change.

Vividness		
Feature	***Score****	***Notes***
Landform	2	No change compared to Plan Concept 1 2050.
Vegetation	2	No change compared to Plan Concept 1 2050.
Water Feature	N/A	
Human-Made	1.5	At Full Buildout, the landfill covers most of the horizon to the left of Athens Avenue.
Overall	**1.8**	
Intactness		
Overall	**2**	Intactness continues to decrease as the landfill expands toward Full Buildout.
Unity		
Overall	**2**	No change compared to Plan Concept 1 2050.
Overall Visual Quality Score	**1.9**	

*Score Key:
1 - Very Low; 2 - Low; 3 - Moderately Low; 4 - Average; 5 - Moderately High; 6 - High; 7 - Very High

Visual Resource Survey:	Existing Conditions		
KOP Location:	**Athens Avenue**	Viewpoint:	**KOP 3**
Landscape Unit:	N/A	Date:	10/1/19
Viewpoint Description (Figure Caption):	Existing view from Athens Avenue looking west toward the landfill.		
Photo Orientation:	West		
Viewer Position:	_____ Inferior ___X___ Level _____ Superior		

View	***Notes***
Foreground (0 - 1/2 mile)	South of Athens Avenue on the left side of the image, an open field of dry grasses extends out from the viewpoint. A row of electrical distribution poles cuts across the field from left to right. The Thunder Valley Casino Resort, with its large parking structure and seventeen story tower is located adjacent to Athens Avenue on the right hand side of the view. Another electrical distribution line parallels Athens Avenue, heading away from the viewpoint.
Middleground (1/2 - 4 miles)	The slopes of the existing landfill and a large warehouse facility associated with the landfill are visible in the distance to the left of Athens Avenue. Beyond the landfill, an electric transmission line crosses the view from left to right, partially screened by the landfill.
Background (> 4 miles)	Mountains that form the western border of the Central Valley are located approximately 40 miles from KOP 3 and are faintly visible in the background of the image to the left of the existing landfill.

Vividness		
Feature	***Score****	***Notes***
Landform	2	Land in the view is generally flat, with only a slight rise in elevation provided by the existing landfill. Distant mountains are only very faintly seen far in the background.
Vegetation	2	Dried tan and ochre grasses and shrubs blanket the open spaces that dominate the left hand side of the view. Ornamental vegetation and green grass lawns front the Thunder Valley Casino Resort.
Water Feature	N/A	
Human-Made	2	The view is heavily influenced by human-made elements. The large casino development, Athens Avenue and associated lighting and signage, and the row of electrical distribution poles fully occupy the right hand side of the image. The left side, at first glance, appears less developed; however, upon closer inspection, one detects the existing landfill and electrical distribution and transmission lines.
Overall	**2.0**	
Intactness		
Overall	**3**	Overall intactness is moderately low due to many encroaching elements, such as the casino development, the electrical distribution lines and the existing landfill.
Unity		
Overall	**2.5**	The human-made structures of the casino property as well as Athens Avenue and associated infrastructure are a sharp contrast to the open spaces south of Athens Avenue. Visual unity is low to moderately low.
Overall Visual Quality Score	**2.5**	

*Score Key:
1 - Very Low; 2 - Low; 3 - Moderately Low; 4 - Average; 5 - Moderately High; 6 - High; 7 - Very High

Visual Resource Survey:	Proposed Project (Plan Concept 2 2050)		
KOP Location:	**Athens Avenue**	Viewpoint:	**KOP 3**
Landscape Unit:	N/A	Date:	10/1/19
Viewpoint Description (Figure Caption):	Simulated view of Plan Concept 2 2050 from Athens Avenue looking west toward the landfill.		
Photo Orientation:	West		
Viewer Position:	_____ Inferior ___X___ Level _____ Superior		

View	***Notes***
Foreground (0 - 1/2 mile)	No change.
Middleground (1/2 - 4 miles)	Both the southeastern and northwestern landfill footprints are visible to the left of Athens Avenue, with the southeastern portion closer to the viewpoint and more visible.
Background (> 4 miles)	No change.

Vividness		
Feature	***Score****	***Notes***
Landform	2	The expanded and heightened landfill would be a noticeable change to the landscape but given the low level of visual interest provided by the current topography, there would not be a reduction in the vividness of the landform.
Vegetation	2	Vegetation on the slopes of the expanded landfill would generally be consistent in color, texture, and size with the vegetation of surrounding open spaces.
Water Feature	N/A	
Human-Made	2	The expansion would increase the visibility of the landfill but there would be no changes to the other existing human-made visual elements. In this location, there is no existing vegetation that would provide partial screening of the landfill.
Overall	**2.0**	
Intactness		
Overall	**2.5**	Slight reduction in intactness due to the expansion of the landfill, an intrusive element.
Unity		
Overall	**2**	The sloped sides of the landfill would be naturally vegetated and appear similar to surrounding open space. Given the low level of contrast with the open spaces south of Athens Avenue, overall visual unity of the view would be only slightly reduced.
Overall Visual Quality Score	**2.2**	

*Score Key:
1 - Very Low; 2 - Low; 3 - Moderately Low; 4 - Average; 5 - Moderately High; 6 - High; 7 - Very High

Visual Resource Survey:	Proposed Project (Plan Concept 2 Full Buildout)		
KOP Location:	**Athens Avenue**	Viewpoint:	**KOP 3**
Landscape Unit:	N/A	Date:	10/1/19
Viewpoint Description (Figure Caption):	Simulated view of Plan Concept 2 Full Buildout from Athens Avenue looking west toward the landfill.		
Photo Orientation:	West		
Viewer Position:	_____ Inferior ___X___ Level _____ Superior		

View	***Notes***
Foreground (0 - 1/2 mile)	No change.
Middleground (1/2 - 4 miles)	The two landfill footprints are larger and more visible compared to Plan Concept 2 2050.
Background (> 4 miles)	No change.

Vividness		
Feature	***Score****	***Notes***
Landform	2	No change compared to Plan Concept 2 2050.
Vegetation	2	No change compared to Plan Concept 2 2050.
Water Feature	N/A	
Human-Made	1.5	At Full Buildout, the landfill covers most of the horizon to the left of Athens Avenue.
Overall	**1.8**	
Intactness		
Overall	**2**	Intactness continues to decrease as the landfill expands toward Full Buildout.
Unity		
Overall	**2**	No change compared to Plan Concept 2 2050.
Overall Visual Quality Score	**1.9**	

*Score Key:
1 - Very Low; 2 - Low; 3 - Moderately Low; 4 - Average; 5 - Moderately High; 6 - High; 7 - Very High

Visual Resource Survey:		***Existing Conditions***
KOP Location:	**Fiddyment Road**	Viewpoint: **KOP 4**
Landscape Unit:	N/A	Date: 10/1/19
Viewpoint Description (Figure Caption):	Existing view from Fiddyment Road looking north toward the landfill.	
Photo Orientation:	North	
Viewer Position:	_____ Inferior ___X___ Level _____ Superior	

View	***Notes***
Foreground (0 - 1/2 mile)	Fiddyment Road is seen traveling from the right side of the frame to the center of the photo. A row of wood electrical distribution poles parallels the road. Tall grasses and shrubs associated with a drainage feature are visible in the immediate foreground. Open space consisting of dried grasses and divided by low barbed-wire fencing fills the remaining portion of the foreground.
Middleground (1/2 - 4 miles)	The existing landfill is visible 1 mile in the distance, to the right of Fiddyment Road. A row of trees, planted for screening purposes, is seen at the base of the landfill mound. An electrical transmission line supported by large lattice structures travels from left to right across the view.
Background (> 4 miles)	The foothills of the Sierra Nevada Mountains are visible on the right side of the photograph.

Vividness		
Feature	***Score****	***Notes***
Landform	4	Flat to gently sloped terrain in the foreground. The existing landfill rises to a height of 125 feet and, from this viewpoint, appears to be a somewhat natural feature of the landscape. The low foothills of the Sierra Nevada are seen several miles in the distance.
Vegetation	3.5	Green to brown riparian grasses and shrubs of moderate height in the immediate foreground. Low brown and tan dried grasses in the open space and on the slopes of the existing landfill. Tall, dark green pine trees are planted at the base of the existing landfill for screening purposes.
Water Feature	N/A	
Human-Made	3	The view, while natural-appearing, is heavily influenced by human development. Fiddyment Road bisects the view and is lined with road signs and an electrical distribution line. Low barbed wire fencing divides the visible open space, which is used for cattle grazing. The existing landfill is visible as is an electrical transmission line.
Overall	**3.5**	

Intactness		
Overall	**3.5**	Intactness of the view is moderately low to average, degraded by the visible human-made elements.

Unity		
Overall	**4**	The existing landfill blends well with the surrounding topography, providing a transition between the flat open spaces and the distant foothills. Unity is reduced by the electrical lines, barbed wire fencing, and road signage.

Overall Visual Quality Score	**3.7**	

*Score Key:
1 - Very Low; 2 - Low; 3 - Moderately Low; 4 - Average; 5 - Moderately High; 6 - High; 7 - Very High

Visual Resource Survey:		***Proposed Project (Plan Concept 1 2050)***
KOP Location:	**Fiddyment Road**	Viewpoint: **KOP 4**
Landscape Unit:	N/A	Date: 10/1/19
Viewpoint Description (Figure Caption):	Simulated view of Plan Concept 1 2050 from Fiddyment Road looking north toward the landfill.	
Photo Orientation:	North	
Viewer Position:	_____ Inferior ___X___ Level _____ Superior	

View	***Notes***
Foreground (0 - 1/2 mile)	No change.
Middleground (1/2 - 4 miles)	The expanded landfill footprint and increased height are visible to the right of Fiddyment Road.
Background (> 4 miles)	The expanded landfill near fully screens the distant Sierra Nevada foothills from view.

Vividness		
Feature	***Score****	***Notes***
Landform	2.5	The expanded landfill occupies a larger footprint and rises an additional 200 feet above the surrounding terrain, making the landfill less natural appearing compared to the existing condition. The low foothills of the Sierra Nevada are no longer visible.
Vegetation	3.5	Similar to the existing landfill and surrounding open space, the expanded landfill is covered in dry, tan-colored grasses.
Water Feature	N/A	
Human-Made	2.5	The expanded landfill becomes a prominent feature of the view.
Overall	**2.8**	

Intactness		
Overall	**2.5**	The expanded landfill is a more intrusive element compared to the lower, smaller existing landfill.

Unity		
Overall	**3**	The form of the expanded landfill is considerably less natural-appearing than the existing landfill. However, the color and natural vegetation of its slopes helps the landfill better blend with the surrounding landscape.

Overall Visual Quality Score	**2.8**	

*Score Key:
1 - Very Low; 2 - Low; 3 - Moderately Low; 4 - Average; 5 - Moderately High; 6 - High; 7 - Very High

Visual Resource Survey:		***Proposed Project (Plan Concept 1 Full Buildout)***
KOP Location:	**Fiddyment Road**	Viewpoint: **KOP 4**
Landscape Unit:	N/A	Date: 10/1/19
Viewpoint Description (Figure Caption):	Simulated view of Plan Concept 1 Full Buildout from Fiddyment Road looking north toward the landfill.	
Photo Orientation:	North	
Viewer Position:	_____ Inferior ___X___ Level _____ Superior	

View	***Notes***
Foreground (0 - 1/2 mile)	No change.
Middleground (1/2 - 4 miles)	From this viewpoint, Plan Concept 1 Full Buildout is only slightly more visible than Plan Concept 1 2050.
Background (> 4 miles)	No change compared to Plan Concept 1 2050.

Vividness		
Feature	***Score****	***Notes***
Landform	2.5	No change compared to Plan Concept 1 2050.
Vegetation	3.5	No change compared to Plan Concept 1 2050.
Water Feature	N/A	
Human-Made	2.5	No change compared to Plan Concept 1 2050.
Overall	**2.8**	

Intactness		
Overall	**2.5**	No change compared to Plan Concept 1 2050.

Unity		
Overall	**3**	No change compared to Plan Concept 1 2050.

Overall Visual Quality Score	**2.8**	

*Score Key:
1 - Very Low; 2 - Low; 3 - Moderately Low; 4 - Average; 5 - Moderately High; 6 - High; 7 - Very High

Visual Resource Survey:		***Existing Conditions***
KOP Location:	**Fiddyment Road**	Viewpoint: **KOP 4**
Landscape Unit:	N/A	Date: 10/1/19
Viewpoint Description (Figure Caption):	Existing view from Fiddyment Road looking north toward the landfill.	
Photo Orientation:	North	
Viewer Position:	_____ Inferior ___X___ Level _____ Superior	

View	***Notes***
Foreground (0 - 1/2 mile)	Fiddyment Road is seen traveling from the right side of the frame to the center of the photo. A row of wood electrical distribution poles parallels the road. Tall grasses and shrubs associated with a drainage feature are visible in the immediate foreground. Open space consisting of dried grasses and divided by low barbed-wire fencing fills the remaining portion of the foreground.
Middleground (1/2 - 4 miles)	The existing landfill is visible 1 mile in the distance, to the right of Fiddyment Road. A row of trees, planted for screening purposes, is seen at the base of the landfill mound. An electrical transmission line supported by large lattice structures travels from left to right across the view.
Background (> 4 miles)	The foothills of the Sierra Nevada Mountains are visible on the right side of the photograph.

Vividness		
Feature	***Score****	***Notes***
Landform	4	Flat to gently sloped terrain in the foreground. The existing landfill rises to a height of 125 feet and, from this viewpoint, appears to be a somewhat natural feature of the landscape. The low foothills of the Sierra Nevada are seen several miles in the distance.
Vegetation	3.5	Green to brown riparian grasses and shrubs of moderate height in the immediate foreground. Low brown and tan dried grasses in the open space and on the slopes of the existing landfill. Tall, dark green pine trees are planted at the base of the existing landfill for screening purposes.
Water Feature	N/A	
Human-Made	3	The view, while natural-appearing, is heavily influenced by human development. Fiddyment Road bisects the view and is lined with road signs and an electrical distribution line. Low barbed wire fencing divides the visible open space, which is used for cattle grazing. The existing landfill is visible as is an electrical transmission line.
Overall	**3.5**	

Intactness		
Overall	**3.5**	Intactness of the view is moderately low to average, degraded by the visible human-made elements.

Unity		
Overall	**4**	The existing landfill blends well with the surrounding topography, providing a transition between the flat open spaces and the distant foothills. Unity is reduced by the electrical lines, barbed wire fencing, and road signage.

Overall Visual Quality Score	**3.7**	

*Score Key:
1 - Very Low; 2 - Low; 3 - Moderately Low; 4 - Average; 5 - Moderately High; 6 - High; 7 - Very High

Visual Resource Survey:		***Proposed Project (Plan Concept 2 2050)***
KOP Location:	**Fiddyment Road**	Viewpoint: **KOP 4**
Landscape Unit:	N/A	Date: 10/1/19
Viewpoint Description (Figure Caption):	Simulated view of Plan Concept 2 2050 from Fiddyment Road looking north toward the landfill.	
Photo Orientation:	North	
Viewer Position:	_____ Inferior ___X___ Level _____ Superior	

View	***Notes***
Foreground (0 - 1/2 mile)	No change.
Middleground (1/2 - 4 miles)	The expanded landfill footprint and increased height are visible to the right of Fiddyment Road. A new, second landfill footprint is visible to the left of Fiddyment Road.
Background (> 4 miles)	The expanded landfill partially screens the distant Sierra Nevada foothills from view.

Vividness		
Feature	***Score****	***Notes***
Landform	3	The expanded landfill occupies a larger footprint and rises an additional 200 feet above the surrounding terrain, making the landfill less natural appearing compared to the existing condition. A second, discrete landfill footprint rises to the west. The low foothills of the Sierra Nevada are partially obscured.
Vegetation	3.5	Similar to the existing landfill and surrounding open space, the expanded landfill is covered in dry, tan-colored grasses.
Water Feature	N/A	
Human-Made	2.5	The expanded landfill becomes a prominent feature of the view.
Overall	**3.0**	

Intactness		
Overall	**2**	The expanded landfill is a more intrusive element compared to the lower, smaller existing landfill. The presence of a second, discrete landfill mound increases the effect.

Unity		
Overall	**2.5**	The form of the expanded landfill is considerably less natural-appearing than the existing landfill. The presence of a second, discrete landfill mound increases the effect. However, the color and natural vegetation of its slopes helps the landfill better blend with the surrounding landscape.

Overall Visual Quality Score	**2.5**	

*Score Key:
1 - Very Low; 2 - Low; 3 - Moderately Low; 4 - Average; 5 - Moderately High; 6 - High; 7 - Very High

Visual Resource Survey:		***Proposed Project (Plan Concept 2 Full Buildout)***
KOP Location:	**Fiddyment Road**	Viewpoint: **KOP 4**
Landscape Unit:	N/A	Date: 10/1/19
Viewpoint Description (Figure Caption):	Simulated view of Plan Concept 2 Full Buildout from Fiddyment Road looking north toward the landfill.	
Photo Orientation:	North	
Viewer Position:	_____ Inferior ___X___ Level _____ Superior	

View	***Notes***
Foreground (0 - 1/2 mile)	No change.
Middleground (1/2 - 4 miles)	From this viewpoint, the western landfill mound is slightly larger and more visible compared to Plan Concept 2 2050.
Background (> 4 miles)	No change compared to Plan Concept 2 2050.

Vividness		
Feature	***Score****	***Notes***
Landform	3	From this viewpoint, the western landfill mound is slightly larger and more visible compared to Plan Concept 2 2050.
Vegetation	3.5	No change compared to Plan Concept 2 2050.
Water Feature	N/A	
Human-Made	2.5	From this viewpoint, the western landfill mound is slightly larger and more visible compared to Plan Concept 2 2050.
Overall	**3.0**	

Intactness		
Overall	**2**	No change compared to Plan Concept 2 2050.

Unity		
Overall	**2.5**	No change compared to Plan Concept 2 2050.

Overall Visual Quality Score	**2.5**	

*Score Key:
1 - Very Low; 2 - Low; 3 - Moderately Low; 4 - Average; 5 - Moderately High; 6 - High; 7 - Very High

Visual Resource Survey:	*Existing Conditions*		
KOP Location:	**Sunset Boulevard West**	Viewpoint:	**KOP 5**
Landscape Unit:	N/A	Date:	10/1/19
Viewpoint Description (Figure Caption):	Existing view from Sunset Boulevard West looking northeast toward the landfill.		
Photo Orientation:	Northeast		
Viewer Position:	_____ Inferior ___X___ Level _____ Superior		

View	***Notes***
Foreground (0 - 1/2 mile)	Sunset Boulevard West extends along the right side of the frame and is paralleled by a line of wooden electrical distribution poles. A low barbed wire fence separates the road right-of-way from adjacent open space.
Middleground (1/2 - 4 miles)	Open space and farmland extends from the foreground into the middleground. The existing landfill is difficult to distinguish but is visible two miles in the distance, to the left of the road. A large existing warehouse associated with the landfill is seen toward the center of the image.
Background (> 4 miles)	The tower of the Thunder Valley Resort and Casino is visible four miles in the distance in the center of the frame. The foothills and mountains of the Sierra Nevada range are seen 10+ miles in the distance.

Vividness		
Feature	***Score****	***Notes***
Landform	4.5	Mostly flat foreground to middleground with low foothills and mountains rising in the distance.
Vegetation	3	Dried grasses cover the open space in the foreground and middleground. Large trees planted for screening purposes around the existing landfill and associated facilities are visible. The distant foothills are covered in dark green vegetation.
Water Feature	N/A	
Human-Made	3	The view is somewhat natural appearing but does contain many human-made elements: the road and associated signage, an electrical distribution line, fencing, casino tower, and the existing landfill.
Overall	**3.5**	

Intactness		
Overall	**4**	Intactness of the view is average, degraded by the visible human-made elements.

Unity		
Overall	**4.5**	The existing landfill is low enough and distant enough that it is not particularly noticeable. The scene is a natural appearing view of open fields with mountains rising in the distance.

Overall Visual Quality Score	**4.0**	

*Score Key:
1 - Very Low; 2 - Low; 3 - Moderately Low; 4 - Average; 5 - Moderately High; 6 - High; 7 - Very High

Visual Resource Survey:	*Proposed Project (Plan Concept 1 2050)*		
KOP Location:	**Sunset Boulevard West**	Viewpoint:	**KOP 5**
Landscape Unit:	N/A	Date:	10/1/19
Viewpoint Description (Figure Caption):	Simulated view of Plan Concept 1 2050 from Sunset Boulevard West looking northeast toward the landfill.		
Photo Orientation:	Northeast		
Viewer Position:	_____ Inferior ___X___ Level _____ Superior		

View	***Notes***
Foreground (0 - 1/2 mile)	No change.
Middleground (1/2 - 4 miles)	The expanded landfill footprint and increased height are visible to the left of Sunset Boulevard West. The proposed compost facility can be seen toward the center of the view, though it is difficult to distinguish at this distance due to its low elevation.
Background (> 4 miles)	The expanded landfill begins to partially obscure the distant Sierra Nevada foothills and mountains.

Vividness		
Feature	***Score****	***Notes***
Landform	4	The expanded landfill rises an additional 200 feet above the surrounding terrain, making the landfill less natural appearing compared to the existing condition. The foothills of the Sierra Nevada are partially obscured.
Vegetation	3	Similar to the existing landfill and surrounding open space, the expanded landfill is covered in dry, tan-colored grasses.
Water Feature	N/A	
Human-Made	3	Increased visibility of the landfill compared to the existing condition; however, the expanded landfill is not a dominant element of the view.
Overall	**3.3**	

Intactness		
Overall	**3.5**	The expanded landfill is a more intrusive element compared to the lower, smaller existing landfill.

Unity		
Overall	**4**	The form of the expanded landfill is considerably less natural-appearing than the existing landfill. However, the color and natural vegetation of its slopes helps the landfill better blend with the surrounding landscape.

Overall Visual Quality Score	**3.6**	

*Score Key:
1 - Very Low; 2 - Low; 3 - Moderately Low; 4 - Average; 5 - Moderately High; 6 - High; 7 - Very High

Visual Resource Survey:	*Proposed Project (Plan Concept 1 Full Buildout)*		
KOP Location:	**Sunset Boulevard West**	Viewpoint:	**KOP 5**
Landscape Unit:	N/A	Date:	10/1/19
Viewpoint Description (Figure Caption):	Simulated view of Plan Concept 1 Full Buildout from Sunset Boulevard West looking northeast toward the landfill.		
Photo Orientation:	Northeast		
Viewer Position:	_____ Inferior ___X___ Level _____ Superior		

View	***Notes***
Foreground (0 - 1/2 mile)	No change.
Middleground (1/2 - 4 miles)	The landfill footprint is larger and more visible compared to Plan Concept 1 2050.
Background (> 4 miles)	Greater portions of the distant mountain range are obscured by the landfill as compared to Plan Concept 1 2050.

Vividness		
Feature	***Score****	***Notes***
Landform	3.5	The size and visibility of the landfill increases compared to Plan Concept 1 2050, obscuring greater portions of the foothills of the Sierra Nevada.
Vegetation	3	No change compared to Plan Concept 1 2050.
Water Feature	N/A	
Human-Made	2.5	Increased visibility of the landfill compared to Plan Concept 1 2050.
Overall	**3.0**	

Intactness		
Overall	**3**	Intactness continues to decrease as the landfill expands toward Full Buildout.

Unity		
Overall	**3.5**	Unity continues to decrease as the landfill expands toward Full Buildout.

Overall Visual Quality Score	**3.2**	

*Score Key:
1 - Very Low; 2 - Low; 3 - Moderately Low; 4 - Average; 5 - Moderately High; 6 - High; 7 - Very High

Visual Resource Survey:	*Existing Conditions*		
KOP Location:	**Sunset Boulevard West**	Viewpoint:	**KOP 5**
Landscape Unit:	N/A	Date:	10/1/19
Viewpoint Description (Figure Caption):	Existing view from Sunset Boulevard West looking northeast toward the landfill.		
Photo Orientation:	Northeast		
Viewer Position:	_____ Inferior ___X___ Level _____ Superior		

View	***Notes***
Foreground (0 - 1/2 mile)	Sunset Boulevard West extends along the right side of the frame and is paralleled by a line of wooden electrical distribution poles. A low barbed wire fence separates the road right-of-way from adjacent open space.
Middleground (1/2 - 4 miles)	Open space and farmland extends from the foreground into the middleground. The existing landfill is difficult to distinguish but is visible two miles in the distance, to the left of the road. A large existing warehouse associated with the landfill is seen toward the center of the image.
Background (> 4 miles)	The tower of the Thunder Valley Resort and Casino is visible four miles in the distance in the center of the frame. The foothills and mountains of the Sierra Nevada range are seen 10+ miles in the distance.

Vividness		
Feature	***Score****	***Notes***
Landform	4.5	Mostly flat foreground to middleground with low foothills and mountains rising in the distance.
Vegetation	3	Dried grasses cover the open space in the foreground and middleground. Large trees planted for screening purposes around the existing landfill and associated facilities are visible. The distant foothills are covered in dark green vegetation.
Water Feature	N/A	
Human-Made	3	The view is somewhat natural appearing but does contain many human-made elements: the road and associated signage, an electrical distribution line, fencing, casino tower, and the existing landfill.
Overall	**3.5**	

Intactness		
Overall	**4**	Intactness of the view is average, degraded by the visible human-made elements.

Unity		
Overall	**4.5**	The existing landfill is low enough and distant enough that it is not particularly noticeable. The scene is a natural appearing view of open fields with mountains rising in the distance.

Overall Visual Quality Score	**4.0**	

*Score Key:
1 - Very Low; 2 - Low; 3 - Moderately Low; 4 - Average; 5 - Moderately High; 6 - High; 7 - Very High

Visual Resource Survey:	*Proposed Project (Plan Concept 2 2050)*		
KOP Location:	**Sunset Boulevard West**	Viewpoint:	**KOP 5**
Landscape Unit:	N/A	Date:	10/1/19
Viewpoint Description (Figure Caption):	Simulated view of Plan Concept 2 2050 from Sunset Boulevard West looking northeast toward the landfill.		
Photo Orientation:	Northeast		
Viewer Position:	_____ Inferior ___X___ Level _____ Superior		

View	***Notes***
Foreground (0 - 1/2 mile)	No change.
Middleground (1/2 - 4 miles)	The expanded landfill footprint and increased height are visible to the left of Sunset Boulevard West. A new, second landfill footprint is visible in the center of the view.
Background (> 4 miles)	The expanded landfill begins to partially obscure the distant Sierra Nevada foothills and mountains.

Vividness		
Feature	***Score****	***Notes***
Landform	4	The expanded landfill rises an additional 200 feet above the surrounding terrain, making the landfill less natural appearing compared to the existing condition. A second, discrete landfill footprint rises to the west. The foothills of the Sierra Nevada are partially obscured.
Vegetation	3	Similar to the existing landfill and surrounding open space, the expanded landfill is covered in dry, tan-colored grasses.
Water Feature	N/A	
Human-Made	2.5	Increased visibility of the landfill compared to the existing condition. A second footprint draws attention to the landfill.
Overall	**3.2**	

Intactness		
Overall	**3**	The expanded landfill is a more intrusive element compared to the lower, smaller existing landfill. The existence of a second landfill mound also has a detrimental effect on intactness.

Unity		
Overall	**3.5**	The form of the expanded landfill is considerably less natural-appearing than the existing landfill. However, the color and natural vegetation of its slopes helps the landfill better blend with the surrounding landscape.

Overall Visual Quality Score	**3.2**	

*Score Key:
1 - Very Low; 2 - Low; 3 - Moderately Low; 4 - Average; 5 - Moderately High; 6 - High; 7 - Very High

Visual Resource Survey:	*Proposed Project (Plan Concept 2 Full Buildout)*		
KOP Location:	**Sunset Boulevard West**	Viewpoint:	**KOP 5**
Landscape Unit:	N/A	Date:	10/1/19
Viewpoint Description (Figure Caption):	Simulated view of Plan Concept 2 Full Buildout from Sunset Boulevard West looking northeast toward the landfill.		
Photo Orientation:	Northeast		
Viewer Position:	_____ Inferior ___X___ Level _____ Superior		

View	***Notes***
Foreground (0 - 1/2 mile)	No change.
Middleground (1/2 - 4 miles)	From this viewpoint, both landfill mounds appear considerably larger compared to Plan Concept 2 2050.
Background (> 4 miles)	The foothills of the Sierra Nevada are near fully obscured by the two landfill mounds.

Vividness		
Feature	***Score****	***Notes***
Landform	2.5	The size and visibility of the landfill increases compared to Plan Concept 2 2050, near fully obscuring the foothills of the Sierra Nevada.
Vegetation	3	No change compared to Plan Concept 1 2050.
Water Feature	N/A	
Human-Made	2	Increased visibility of the landfill compared to Plan Concept 2 2050, with the landfill becoming a dominant element of the view.
Overall	**2.5**	

Intactness		
Overall	**2**	Intactness continues to decrease as the landfill expands toward Full Buildout.

Unity		
Overall	**3**	Unity continues to decrease as the landfill expands toward Full Buildout.

Overall Visual Quality Score	**2.5**	

*Score Key:
1 - Very Low; 2 - Low; 3 - Moderately Low; 4 - Average; 5 - Moderately High; 6 - High; 7 - Very High

Appendix C
Air Quality

Appendix C.1
Methodology for Air Quality and Greenhouse Gas Impact Analysis

Jacobs

Renewable Placer

Methodology for Air Quality and Greenhouse Gas Impact Analysis

Draft

June 17, 2020

Western Placer Waste Management Authority

Renewable Placer

Document Title:	Methodology for Air Quality and Greenhouse Gas Impact Analysis
Revision:	Rev 0
Document Status:	Draft
Date:	June 17, 2020
Client Name:	Western Placer Waste Management Authority
Project Manager:	Janet Goodrich
Authors:	Elizabeth Schwing and Pamela Vanderbilt
File Name:	WPWMA Air Quality Methodology_Draft_06_17_2020

Jacobs Engineering Group Inc.

2485 Natomas Park Drive, Suite 600
Sacramento, California 95833-2937
United States
T +1.916.920.0300
F +1.916.920.8463
www.jacobs.com

© Copyright 2019 Jacobs Engineering Group Inc. The concepts and information contained in this document are the property of Jacobs. Use or copying of this document in whole or in part without the written permission of Jacobs constitutes an infringement of copyright.

Limitation: This document has been prepared on behalf of, and for the exclusive use of Jacobs' client, and is subject to, and issued in accordance with, the provisions of the contract between Jacobs and the client. Jacobs accepts no liability or responsibility whatsoever for, or in respect of, any use of, or reliance upon, this document by any third party.

Contents

1. Introduction 1
2. Emission Calculation Methodology 3
2.1 Construction Emissions 3
2.1.1 Construction Vehicle Exhaust Emissions 3
2.1.2 Construction Fugitive Dust Emissions 3
2.2 Operation Emissions 4
2.2.1 Operation Vehicle Exhaust Emissions 4
2.2.2 Operation Fugitive Dust Emissions 5
2.2.3 Fugitive Landfill Gas Emissions 5
2.2.4 Landfill Gas to Energy Plant Exhaust Emissions 5
2.2.5 Flare Exhaust Emissions 6
2.2.6 Compost Facility Process Emissions 6
2.2.7 Generator Exhaust Emissions 6
2.2.8 MRF Process Emissions 6
2.2.9 Fuel Storage and Dispensing and Equipment Maintenance Emissions 7
2.3 GHG Emissions Estimation and Analysis 7
2.3.1 Emissions Estimation Procedure 7
2.3.2 Landfill Gas Emissions 8
2.3.3 Vehicle and Equipment Emissions 8
2.3.4 Electricity Generation and Consumption 8
2.4 Waste Relocation Emissions 9
3. Health Risk Assessment 10
4. CO Hotspot Analysis 12
5. Odor Impact Assessment 13
6. Health Impacts from Criteria Pollutants and Precursors (In Response to the Friant Ranch Decision) 14
7. References 15

1. Introduction

This document describes proposed methods to estimate emissions of criteria pollutants, toxic air contaminants (TACs), and greenhouse gases (GHGs) and assess potential impacts to air quality and human health associated with the Renewable Placer: Waste Action Plan (proposed project). This methodology reflects the Placer County Air Pollution Control District (PCAPCD) 2017 CEQA Air Quality Handbook (PCAPCD 2017) and accepted industry standards.

PCAPCD defines criteria air pollutants as air pollutants for which acceptable levels of exposure can be determined and for which an ambient air quality standard has been set. Examples include: ozone, carbon monoxide (CO), nitrogen dioxide (NO_2), sulfur dioxide (SO_2), particulate matter 10 micrometers or less in diameter (PM_{10}), and particulate matter 2.5 micrometers or less in diameter ($PM_{2.5}$) (PCAPCD 2017). GHGs include carbon dioxide (CO_2), methane (CH_4), nitrous oxide (N_2O), hydrofluorocarbons (HFCs), perfluorocarbons (PFCs), and sulfur hexafluoride (SF_6), as defined by California Assembly Bill 32 (PCAPCD 2017). TACs are defined as airborne pollutants that may be expected to result in "an air pollutant which may cause or contribute to an increase in mortality or in serious illness, or which may pose a present or potential hazard to human health" per the California Health and Safety Code §39655 (PCAPCD 2017).

The proposed project consists of two separate plan concepts, Plan Concept 1 and Plan Concept 2, which will be analyzed at an equal level. Plan Concept 1 and Plan Concept 2 include similar project elements, but the locations, timing, and characteristics of the elements differ. Proposed project elements are divided into solid waste project elements, complementary/programmatic elements, and supporting elements.

Solid waste project elements are the project elements that are needed for Western Placer Waste Management Authority (WPWMA) to continue providing solid waste management services in the near and long term. These project elements include:

- Continued Operation of the Materials Recovery Facility (MRF) Building
- Expanded and Redesigned Compost Operations
- Expanded and Redesigned Construction and Demolition Waste Operations
- Expanded and Redesigned Public Waste Drop-Off Area Operations
- Expanded Landfill Disposal Capacity (includes expanded landfill footprint, increased daily tons received, and increased daily vehicle trips)
- Excavation, Relocation and Reburial of Solid Waste from Older, Unlined Sections of the Landfill

Complementary/programmatic elements are project elements that are not specifically required to provide continued solid waste management services to Participating Agencies but important to achieve other project goals. These project elements include:

- Compatible Technologies
- Pilot Study Area
- University Research Area
- Landfill Gas (LFG) to Compressed Natural Gas (CNG) Area

Supporting elements are the project elements that are required to support both the solid waste project and complementary/programmatic elements. These project elements include:

- Recovered Materials Storage Areas
- Stormwater Ponds
- Road Crossing

- Maintenance Areas
- Administrative Buildings
- Facility Parking
- Household Hazardous Waste (HHW) Facility Operations
- Entrance Facilities
- Wastewater and Water Supply Infrastructure
- Continued Operation of the Existing Landfill Gas-to-Energy Plant
- Site Perimeter Infrastructure

With the noted exception, solid waste project elements and supporting elements include those activities directly under WPWMA's control[1]. These elements will be evaluated at a project-specific level of detail. Complementary and programmatic elements include those activities that may require third-party involvement and are not fully defined at this time. Complementary/programmatic elements will be evaluated at a program level.

Emissions will be estimated for the incremental increases in activity over time associated with Plan Concept 1 and Plan Concept 2 solid waste project elements and supporting elements. Baseline activity levels and future activity levels for the proposed project will be quantified in order to assess the change in activity associated with each plan concept. Emissions will then be estimated for the incremental increase in activity. The baseline year will be 2018, with the project timeframe spanning from the baseline year through 2050. Note that some activities, such as landfilling, are expected to extend beyond the project timeframe, but the analysis will focus on impacts through 2050 due to increasing uncertainty associated with operations occurring more than 30 years in the future.

To answer the California Environmental Quality Act (CEQA) questions and evaluate the significance of impacts for air quality and GHGs associated with the proposed project, estimates of construction and operational emissions will be compared to the PCAPCD CEQA significance thresholds for the project construction phase, project operational phase, and cumulative-level emissions, respectively, as described in the 2017 CEQA Air Quality Handbook (PCAPCD 2017).

For air quality or GHG impacts identified as significant or potentially significant, all feasible mitigation measures will be identified. The PCAPCD 2017 CEQA Air Quality Handbook includes appendices that list recommended construction and operational mitigation measures for criteria pollutants and GHGs (PCAPCD 2017). Additionally, the California Emissions Estimator Model (CalEEMod) includes mitigation measures, which are largely based on the California Air Pollution Control Officers Association (CAPCOA) *Quantifying Greenhouse Gas Mitigation Measures* document (CAPCOA 2010, 2017). When feasible, the effectiveness of mitigation measures will be assessed in comparison with applicable air quality thresholds of significance.

[1] The existing landfill gas-to-energy plant is owned and operated by Energy 2001, Inc. under a long-term lease agreement with the WPWMA. The WPWMA does not have direct control over this operation.

2. Emission Calculation Methodology

Emissions of criteria pollutants, TACs, GHGs will be estimated for construction and operation of the proposed project. Emissions from construction of the proposed solid waste project elements and supporting elements would result from on-road vehicle exhaust, off-road equipment exhaust, and fugitive dust. Operation-related emissions would result from on-road vehicle exhaust, off-road equipment exhaust, fugitive dust, flare operation, landfill gas-to-energy (LFGTE) plant operation, fugitive landfill gas (LFG), waste transfer and processing activities, composting, generator operation, fuel storage and dispensing, and maintenance operations. Excavation of existing solid waste would be performed using different methods, over different durations, and at different times for each Plan Concept; therefore, waste excavation is discussed separately in Section 2.4.

2.1 Construction Emissions

Emissions of CO, nitrogen oxides (NOx), reactive organic gases (ROG), PM_{10}, $PM_{2.5}$, TACs, and GHGs would be generated during construction of new site facilities and landfill modules. Activities during construction of the proposed facilities would include demolition, site preparation, grading, excavation, road construction, foundation construction, and building construction. Construction activities during landfill module construction would include excavation, placement of liner materials, and partial module closure. Onsite and offsite construction emissions would fall into two categories: vehicle and construction equipment exhaust, and fugitive dust generated by vehicle travel and soil disturbing activities. During onsite construction, activities would be assumed to occur during daylight hours, 5 days per week, year-round. Although activities may actually occur 7-days a week at times, concentrating activities to 5 days a week represents a more conservative, worse-case daily emission rate.

Projected project schedules for Plan Concept 1 and Plan Concept 2 identify the expected timing and duration of construction of proposed project elements. The projected schedules for each Plan Concept will be analyzed to identify "peak" years when anticipated construction activities could result in the highest levels of daily emissions. The hypothetical "maximum" daily emissions for each peak year will be conservatively estimated by adding the highest daily emissions for each project element that would be constructed in that year.[2] Maximum daily construction emissions for each Plan Concept will be determined on a pollutant-specific basis and compared to the PCAPCD CEQA significance thresholds.

2.1.1 Construction Vehicle Exhaust Emissions

Construction equipment exhaust emissions of CO, NOx, ROG, PM_{10}, $PM_{2.5}$, TACs, and GHGs will be estimated using emission factors taken from the Appendix D of the CalEEMod User's Guide (CAPCOA 2017). The construction equipment and service trucks used for routine onsite travel will be considered onsite emission sources, while worker commute vehicles and construction material haul trucks will be considered offsite emission sources. On-road vehicle exhaust emissions will be estimated using average emission factors for the PCAPCD from ARB's emission inventory tool ("EMission FACtor," EMFAC2017). Trip distances representing PCAPCD default values for employee commutes and material haul distances will be taken from Appendix D of the CalEEMod User's Guide (CAPCOA 2017).

2.1.2 Construction Fugitive Dust Emissions

Fugitive dust emissions would result from vehicle travel on unpaved and paved roads, and soil disturbing activities such as site grading, soil and waste excavation, and stockpile movement. Emission factors from EMFAC2017 will be used to estimate fugitive emissions from tire and brake wear. Fugitive dust emissions from vehicle travel on unpaved and paved roads will be estimated using emission factors from Appendix D of the CalEEMod User's Guide and United States Environmental Protection Agency (EPA)-approved emission factors

[2] Note that hypothetical maximum daily emissions are not expected to occur but will be estimated for comparison to the CEQA significance thresholds to allow conservative evaluation of worst-case potential impacts.

and methodology published in AP-42 (CAPCOA 2017; EPA 2006, 2011). Onsite travel distances will be estimated based on figures showing locations of proposed project elements.

Fugitive dust emissions from soil disturbance (e.g., grading and excavating activities) will be estimated using emission factors from Appendix D of the CalEEMod User's Guide (CAPCOA 2017).

2.2 Operation Emissions

Emissions of CO, NOx, ROG, PM_{10}, $PM_{2.5}$, TACs, and GHGs would result from operation of the proposed solid waste project elements and supporting elements. Proposed project operation emissions would be generated from routine maintenance activities, worker commute trips, haul truck trips (commercial and self-haul), off-road equipment, fugitive LFG, LFG flares, LFGTE plant operation, generators, composting, soil disturbance, waste recovery operations, and fuel storage and dispensing. Operation activities at the landfill and waste recovery facilities are assumed to occur 10 hours per day, 7 days per week, and 52 weeks per year. The gas collection system and the LFGTE plant are operated at all times, and fugitive LFG and compost process emissions are emitted continuously, 24 hours per day, 7 days per week, and 52 weeks per year.

Operation emissions for the incremental increases in activity for both Plan Concepts will be calculated for the project buildout year of 2050, when maximum operational capacity is expected. The hypothetical "maximum" daily operation emissions will be conservatively estimated by identifying the representative operating scenario that would result in the highest daily emissions for each Plan Concept based on maximum expected daily activity levels in the project buildout year.[3] Note that the maximum expected daily activity levels for operation of each project element would not necessarily occur on the same day, which will be reflected in the representative operating scenario. The hypothetical "maximum" daily operation emissions would represent the operating scenario resulting in the highest daily emissions based on combined activity levels for all project elements. Project-related increases in maximum daily operation emissions will be compared to the PCAPCD CEQA significance thresholds. Long-term exposures and health risks from TACs will be analyzed using the 30-year-average annual emissions associated with the increases in project-related activities. This approach will account for a 30-yr exposure duration for nearby residents consistent with Office of Environmental Health Hazard Assessment (OEHHA) guidance (OEHHA 2015). The health risk assessment approach is described in further detail in Section 3.

2.2.1 Operation Vehicle Exhaust Emissions

Operation equipment exhaust emissions of CO, NOx, ROG, PM_{10}, $PM_{2.5}$, TACs, and GHGs will be estimated using emission factors taken from the Appendix D of the CalEEMod User's Guide (CAPCOA 2017). On-road vehicle exhaust emissions will be estimated using EMFAC2017 average emission factors for the PCAPCD.

On-road vehicle counts for the project buildout year will be based on actual vehicles recorded in the 2018 baseline year and an assumed annual increase to account for waste growth and facility usage over time. The average waste haul truck trip distance will be based on trip origin data collected at the WPWMA scale houses for the 2018 baseline year and adjusted to account for waste growth over time based on population forecast data provided in general plans for the surrounding areas. Default worker commute trip distance values for PCAPCD will be taken from Appendix D of the CalEEMod User's Guide (CAPCOA 2017).

Vehicle traffic related to transport of the solid waste associated with the proposed project includes both commercial haulers and self-haul vehicles. Commercial haulers bring collected waste to the site in medium to heavy duty haul trucks. Self-haul traffic includes small businesses (i.e., landscaper and contractors) and the public. Once onsite, dedicated operational on-road vehicles and off-road equipment move materials between the various waste recovery and disposal facilities. The net change in vehicle traffic for the

[3] Note that hypothetical maximum daily emissions are not expected to occur but will be estimated for comparison to the CEQA significance thresholds to capture worst case potential impacts.

"maximum" day of operations will be used to calculate worst-case emissions for averaging periods of 24 hours or less. Emissions for long term averaging periods (annual or monthly) will be calculated based on the net change in average daily vehicle traffic.

2.2.2 Operation Fugitive Dust Emissions

Fugitive dust emissions would result from vehicle travel on unpaved and paved roads, soil disturbing activities such as stockpile movement and application of daily cover on the landfill working face, waste relocation, and operation of waste recovery facilities such as the construction and demolition waste processing facility, MRF, and compost facility.

Emission factors from EMFAC2017 will be used to estimate fugitive emissions from vehicle tire and brake wear. Fugitive dust emissions from vehicle travel on unpaved and paved roads will be estimated using emission factors from Appendix D of the CalEEMod User's Guide and EPA-approved emission factors and methodology published in AP-42 (CAPCOA 2017; EPA 2006, 2011). Onsite travel distances will be estimated based on figures showing locations of proposed project elements.

Fugitive dust emissions from soil and waste disturbance and management will be estimated using emission factors from Appendix D of the CalEEMod User's Guide (CAPCOA 2017), EPA's AP-42: Compilation of Air Pollutant Emissions Factors, and guidance published by other air districts.

2.2.3 Fugitive Landfill Gas Emissions

The gases generated from the aerobic decomposition of organic waste and the anaerobic bacterial digestion of buried waste are called landfill gas (LFG). At landfills equipped with LFG collection systems (such as the WPWMA's landfill), fugitive LFG results from emissions of LFG not captured by the collection system.

Total LFG generation associated with the proposed expanded waste disposal operations will be estimated using the EPA's LFG generation model (LandGEM), with appropriate input values for in-place refuse mass, the refuse decay constant, and ultimate methane generation rate. Input values will be calibrated with site-specific LFG recovery data and collection efficiency estimates.

Future LFG generation associated with the proposed project will be estimated assuming that the composition of the waste stream will change during the project timeframe, consistent with Senate Bill (SB) 1383 organics diversion requirements. The change in composition will be captured as a single step change, with the current waste stream considered representative through 2025 and a reduced organics waste stream considered representative from 2026 through 2050. Two parameters used by the LandGEM model to estimate LFG generation, L_0 (potential methane generation capacity) and k (methane generation rate), will be adjusted to account for the change in composition of the waste stream. Note that the LandGEM model does not allow multiple L_0 and k entries to account for changes over time; therefore, results for two separate modeled scenarios (current waste stream through 2025 and reduced organics waste stream from 2026 through 2050) will be compiled to estimate total LFG generation for the proposed project.

The LFG collection efficiency for the 2018 baseline year will be calculated based on an average of the actual volume of LFG collected at the site compared to modeled LFG generation rates for 2014 through 2018. The LFG collection efficiency for the proposed project will be based on the LFG collection system and cover proposed as part of each Plan Concept. Site-specific LFG sampling data will be used to estimate concentrations of GHGs and TACs in the LFG.

2.2.4 Landfill Gas to Energy Plant Exhaust Emissions

Emissions from the LFGTE plant would result from combustion of collected LFG to generate electricity. In the 2018 baseline year, the LFGTE plant received all collected LFG with the exception of a nominal volume sent to the flare, and still had unused capacity. It is assumed that additional LFG generated and collected as part of the proposed project will be sent to the LFGTE plant until the plant reaches capacity. Therefore, until the LFGTE plant reaches capacity, the LFG flowrate to the LFGTE plant associated with the proposed project will be determined

based on the delta between the baseline LFG flowrate (to the LFGTE plant and flare) and the total collected LFG. Note that the proposed project does not include an increase in LFGTE plant capacity, and it is assumed that LFG generated in exceedance of LFGTE plant capacity would be sent to a complementary use element, such as an LFG-to-compressed natural gas (CNG) plant, or flares.

Criteria pollutant, TAC, and GHG emissions from the LFGTE plant will be estimated based on site-specific LFG sampling data and the control efficiency of the plant.

2.2.5 Flare Exhaust Emissions

Emissions from the LFG flares would result from combustion of collected LFG and small amounts of propane (as necessary to support flare start-up operations). Criteria pollutant, TAC, and GHG emissions from the flares will be estimated based on site-specific LFG sampling data and the control efficiency of each flare.

With the exception of a small, consistent flow of approximately 150 standard cubic feet per minute (SCFM) to the WPWMA flare (which is operated like a pilot light), all collected LFG will be assumed to go to the LFGTE plant, until the LFGTE plant reaches capacity. At that time, additional LFG will be assumed to go to the flares for the purposes of analysis given the uncertainty associated with proposed complementary use elements such as an LFG-to-CNG plant.

The flow rate of LFG to the flares will be determined based on modeled rates of LFG generation and LFG collection efficiency, excluding the baseline LFG flowrate to the flares and the LFG flowrate to the LFGTE plant at full capacity. WPWMA anticipates that future excess LFG will be used for other renewable energy or fuel projects, but those potential projects are not yet fully developed; therefore, they will not be included in this detailed analysis.

2.2.6 Compost Facility Process Emissions

Process emissions associated with operation of the proposed compost facility will be estimated using recommended emission factors from the *Air Resources Board (ARB) Emissions Inventory Methodology for Composting Facilities* (ARB 2015). The ARB methodology includes emissions factors for estimating ROG and ammonia (NH_3) emissions from stockpiles and the composting process. Emissions will be estimated based on type of composting process, facility throughput, feedstock types, and control systems in place.

Baseline conditions will be evaluated based on existing compost facility practices. A reduction in the per ton emissions is expected in the future, as compost operations will change over from open windrowing to aerated static pile methods. While the details of the future compost facility are unknown, it is assumed that the expanded composting operations will include a positive aerated static pile (ASP) system for the near term that could transition to a negative ASP system with an extended bed configuration for active composting and large static piles for curing. Emission control efficiencies for ASP systems will be obtained from the *ARB Emissions Inventory Methodology for Composting Facilities* (ARB 2015).

2.2.7 Generator Exhaust Emissions

Generator exhaust emissions would result from operation of gasoline- and diesel-fueled generators used as portable or emergency sources of power. Emissions of CO, NOx, ROG, PM_{10}, $PM_{2.5}$, TACs, and GHGs from diesel-fueled generators will be estimated using emission factors taken from the Appendix D of the CalEEMod User's Guide (CAPCOA 2017). CalEEMod assumes all generators would be diesel fueled, so emissions from gasoline-fueled generators will be estimated using emissions factors taken from EPA's AP-42: Compilation of Air Pollutant Emissions Factors (EPA 1996).

2.2.8 MRF Process Emissions

Waste conveyance and sorting processes in the MRF may result in fugitive dust emissions and odors inside and outside the building enclosure. The MRF building is open on one side and equipped with 24 unfiltered roof vents,

which could result in the release to atmosphere of a portion of the fugitive dust and odors generated inside the building.

Emission factors used in other environmental documents for MRF facilities, such as the Final Environmental Impact Report (FEIR) for the Community Recycling and Resource Recovery Facility in Sun Valley, CA and the air quality assessment for a Materials Recovery Facility and Transfer Station in Azusa, CA (Community Recycling and Resource Recovery, Inc., 2012; Waste Management, 2010), will be used to estimate emissions associated with the increase in MRF activities under the proposed project.

2.2.9 Fuel Storage and Dispensing and Equipment Maintenance Emissions

Emissions associated with fuel storage and dispensing will be calculated using approved emission factors and the estimated project-related increases in fuel to be stored and dispensed in the buildout year. Similarly, emissions for equipment maintenance will be calculated for project-related increases in solvent use and maintenance activities in the buildout year.

2.3 GHG Emissions Estimation and Analysis

This section summarizes the methodology and assumptions that will be used to calculate the GHG emissions associated with the proposed project. Earlier sections of this methodology discussed calculation of GHG emissions associated with fuel combustion in equipment and vehicles during construction and operation. This section expands that discussion to include the other types of GHG emissions that will be estimated and analyzed for the proposed project.

To evaluate the significance of potential impacts associated with GHG emissions, the total unmitigated project-related GHG emissions will be compared to the PCAPCD GHG significance thresholds (PCAPCD 2017). If the GHG emissions exceed the thresholds, feasible mitigation measures for the GHG emissions will be evaluated to reduce the proposed project's GHG impacts.

Additionally, CEQA requires that the proposed project evaluate the potential for conflicts with any applicable plans, policies or regulations adopted for the purpose of reducing emissions of GHGs. To evaluate the significance of potential project-related impacts associated with this CEQA criterion, the proposed project will be assessed for consistency with the following:

- applicable California laws, plans, policies, and regulations (e.g., AB 876, SB 1383, AB 1826, AB 939), and
- the Placer County Sustainability Plan (Placer County 2020), including the solid waste-related GHG emission reduction measures and goals in that plan.

2.3.1 Emissions Estimation Procedure

Impacts of the proposed project will be evaluated using the principles of the GHG Protocol Project Accounting Standard (GHG Protocol Initiative, undated). Emissions will be estimated for the incremental increases in activity over time associated with Plan Concept 1 and Plan Concept 2 when compared to the baseline activity levels.

This analysis will predict the primary and secondary effects of the incremental increases in activities associated with the proposed project and the GHG sources and sinks associated with those activities. A primary effect is the intended change caused by a project activity and a secondary effect is an unintended change resulting from a project activity. Secondary effects include one-time effects (i.e., construction emissions) and upstream and downstream effects (i.e., recurring changes associated with inputs to the project activity or products from the project activity) (GHG Protocol Initiative, undated).

For the proposed project, GHG emissions associated with project-related increases in LFG production and combustion, fuel use in vehicles and equipment, electricity use, and other factors will be estimated. The production of LFG and the GHG emissions associated with collection and combustion of that gas will continue well into the future. Under the proposed project, increased diversion and composting of organic and food wastes

will result in GHG reductions compared to landfilling of these wastes, and those emissions benefits will be quantified. The additional GHG impacts that would result from approval and implementation of the proposed project will be represented by the total primary and secondary emissions associated with the incremental increases in activity over time from the proposed project at buildout compared to the baseline conditions.

Project-related GHG emissions are evaluated in terms of carbon dioxide equivalent (CO_2e) emissions. The 2017 PCAPCD CEQA Handbook defines CO_2e as a "metric used to compare emissions of various greenhouse gases. It is the mass of carbon dioxide that would produce the same estimated radiative forcing as a given mass of another greenhouse gas. Carbon dioxide equivalents are computed by multiplying the mass of the gas emitted by its global warming potential" (PCAPCD 2017). GHG impacts for the proposed project will be estimated using United Nations Intergovernmental Panel on Climate Change (IPCC) Fifth Assessment Report (SAR5) global warming potential (GWP) values. Therefore, a GWP of 28 will be used for methane when estimating project-related GHG emissions.

2.3.2 Landfill Gas Emissions

Several factors will be considered in estimation of GHG emissions associated with LFG combustion and releases of fugitive LFG. These include the rate at which LFG is generated by the waste, the chemical composition of the LFG, the capture efficiency of the gas collection system, the methane destruction efficiency for the flares and LFGTE plant, and the fraction of methane which is oxidized to CO_2 as the uncaptured gas passes through the landfill cover. References such as WPWMA's *e-GGRT Reporting Year 2018 GHG Summary Report*, submitted to the EPA to comply with the Mandatory GHG Reporting Rule (40 Code of Federal Regulations [CFR] 98 Subpart HH[4]), will be used to define these parameters for estimation of project-related emissions (WPWMA 2019). Priority will be given to available site-specific information on LFG, but if additional information is needed to fill gaps, other sources include default waste composition fractions and GHG emission factors from Appendix D of the CalEEMod User's Guide (CAPCOA 2017), EPA's AP-42: Compilation of Air Pollutant Emissions Factors, and guidance published by ARB, CalRecycle, and other air districts.

2.3.3 Vehicle and Equipment Emissions

As described in earlier sections, the estimation of emissions from operation and construction of the proposed project will include the GHG emissions from off-road equipment such as dozers, scrapers, and compactors. In addition, GHG emissions will be estimated for project-related fuel combustion in waste collection vehicles, on-site vehicles, and employee commute vehicles.

Other non-vehicular GHG emission sources associated with the proposed project will include fuel combustion by lawnmowers, leaf blowers and other small utility equipment, and other small sources. CalEEMod will be used to provide emission estimation for these types of area sources based on land use types.

2.3.4 Electricity Generation and Consumption

Some of the LFG collected by the facility is used to generate electricity. Project-related buildings and equipment, such as the gas collection system, will use electricity purchased from the grid. The purchased electricity is generated from a variety of sources, including fossil fuels. The GHG emissions associated with the increased generation and use of electricity by the proposed project will be included in the GHG analysis.

The electricity generated at the LFGTE plant is considered to be a renewable fuel source, and the CO_2 emissions are biogenic because they are LFG-derived. The GHG benefits of this power generation are conveyed with the renewable energy credits (RECs) which are sold from the project. Therefore, in accordance with the relevant

[4] Under the EPA Mandatory Reporting of GHGs rule, owners or operators of municipal solid waste (MSW) landfills must report emissions from MSW landfills and all other source categories located at the landfill for which methods are defined in the rule. Owners or operators are required to collect emission data; calculate GHG emissions; and follow the specified procedures for quality assurance, missing data, recordkeeping, and reporting per the requirements of 40 CFR Part 98 Subpart HH – Municipal Solid Waste Landfills (EPA, 2018).

accounting standards, this analysis will quantify the GHG impacts of all power consumed onsite as if it will be purchased from the grid, which is a conservative approach.

The GHG emissions from electricity use will be calculated using emission factors for electricity generation from EPA's eGRID database for Placer County. Information on electricity use in 2018 baseline year, and an assumed annual increase to account for operational increases due to waste growth, will be used to estimate electricity use at buildout.

2.4 Waste Relocation Emissions

Both Plan Concepts include excavation of existing solid waste in unlined landfill cells and relocation of that waste to a new lined landfill cell. Excavation of existing solid waste would be performed using different methods, over different durations, and at different times for each Plan Concept. Sources of emissions associated with waste relocation would include fugitive LFG, off-road equipment exhaust, on-road vehicle exhaust, fugitive dust, and possible use of electricity to power a conveyor system. Emissions from these sources would be estimated as described in Sections 2.1 to 2.3.

For Plan Concept 1, relocation of existing solid waste would be performed as part of regular site operations. Other project elements would not be dependent upon completion of waste relocation, allowing the work to be performed over an extended period of time by operations staff using off-road equipment already onsite, as available. Waste relocation would be done later in the analysis timeframe, and would not coincide with proposed project construction activities or major operational changes. Due to the nature of this project element under Plan Concept 1, waste relocation would be considered an operational source for Plan Concept 1. Emissions from waste relocation would be estimated and included with emissions from other operational sources for comparison to the PCAPCD CEQA thresholds when determining significance for Plan Concept 1.

For Plan Concept 2, relocation of existing solid waste would be performed at the beginning of the project timeframe as a separate construction project. Construction of other project elements would be dependent upon completion of waste relocation, requiring that the work be performed over a much shorter timeframe by a separate work crew. This activity would be much more equipment intensive under Plan Concept 2 due to the need for rapid completion, and alternative waste transfer methods, such as use of an electric conveyor system, would be considered. Due to the nature of this project element under Plan Concept 2, waste relocation would be considered a construction source for Plan Concept 2. Emissions from waste relocation would be estimated and included with emissions from other construction sources for comparison to the PCAPCD CEQA thresholds when determining significance for Plan Concept 2.

3. Health Risk Assessment

A health risk assessment (HRA) will be prepared to predict potential human health risks from exposure of offsite receptors to estimated TAC emissions from the proposed project. The human health risk categories to be evaluated include individual excess lifetime cancer risk, noncancer health effects from chronic (long-term) exposure, and noncancer health effects from acute (short-term) exposure. The HRA will be performed in accordance with Appendix G of the 2017 PCAPCD CEQA Air Quality Handbook, titled "*Preparing a Health Risk Assessment for Land Use Projects*" (PCAPCD 2017), and the latest guidance from OEHHA, outlined in the "*Guidance Manual for Preparation of Health Risk Assessments*" (OEHHA 2015).

In accordance with the PCAPCD CEQA Air Quality Handbook (PCAPCD 2017), impacts associated with construction and operation of the proposed project will be characterized. TAC emission sources associated with the proposed project include: stationary LFG flares and LFGTE plant, fugitive LFG, on-road vehicle exhaust, off-road equipment exhaust, generator exhaust, fuel storage and dispensing, routine maintenance operations, fugitive dust, and fugitive emissions from composting and other waste recovery operations. For dispersion and risk modeling, the emissions estimates will be divided into short-term emissions (for acute risks) and long-term emissions (for cancer and chronic risks). The 2050 proposed project buildout year will be used for the short-term emissions analysis, because it represents the highest level of emissions from fugitive LFG and LFG combustion for the proposed project during the project timeframe. Note that short-term emissions due to construction and operation vehicle exhaust (emitted as diesel particulate matter [DPM]) will not be included because acute health values are not available for DPM. Long-term emissions impacts will be analyzed using the 30-year-average annual emissions.

The AERMOD air dispersion model will be used to predict pollutant concentrations at specific receptor locations representing residents, workers, and sensitive populations near the proposed project site. Receptor locations will be identified according to OEHHA guidance to permit the estimation and evaluation of predicted pollutant concentrations and impacts associated with the proposed project. AERMOD modeling results will then be imported into ARB's most recent HARP2 Risk Module. The HARP2 Risk Module uses AERMOD- predicted pollutant concentrations, exposure assumptions, and approved health values from OEHHA to predict potential health impacts in terms of excess lifetime cancer risk, acute hazard index (HIA), and chronic hazard index (HIC).

The HRA will evaluate potential health impacts associated with the following exposure routes: inhalation, dermal absorption, and ingestion of homegrown produce, soil, and mother's milk. The exposure duration for cancer risks at residential and sensitive receptors is assumed to be 24 hours per day continuously for 30 years. For cancer risks at workplace receptors, the exposure duration is assumed to be 8 hours per day, 5 days per week, for 25 years. The OEHHA recommended age-sensitivity factors (OEHHA 2015) will be incorporated into the residential health risk assessment.

Chronic risks will be assessed by comparing the predicted annual TAC ground level concentrations (the potential exposure levels) to the chronic reference exposure levels (RELs) developed by OEHHA to obtain the HIC. The acute risks will be assessed by comparing the predicted 1-hour maximum TAC ground level concentrations with the acute RELs developed by OEHHA to obtain the HIA by target organ.

Potential cancer and non-cancer (chronic and acute) health risks will be characterized for hypothetical receptors at locations where the highest levels of exposures to TAC emissions from the proposed project are predicted to occur. The location for the hypothetical maximally exposed individual (MEI) will be selected from the modeled receptor grids for residential and workplace receptors. The location for the residential MEI (MEIR) will be selected from receptors modeled in residential areas in the facility vicinity, and the workplace MEI (MEIW) will be selected from receptors modeled in commercial areas near the facility.

The receptors used in the risk assessment for the cumulative analysis will differ from those used in the proposed project analysis. In addition to receptors identified for the proposed project analysis, the

cumulative analysis will include receptors for proposed and approved area plan developments, such as the Sunset Area Plan and Placer Ranch Specific Plan.

Results of the risk assessment will be summarized, and the predicted cancer and noncancer health risks associated with human exposure to TAC emissions from the proposed project will be compared to the applicable PCAPCD significance thresholds. Any significant impacts will be identified, along with feasible mitigation measures and an evaluation of their benefits.

4. CO Hotspot Analysis

The CO hotspot analysis for the proposed project will tier off of the CO hotspot analysis for the Sunset Area Plan FEIR (Placer County 2019). Because the Sunset Area Plan FEIR evaluated the CO hotspot effects of cumulative buildout within the Sunset Area, which included buildout of the WPWMA properties, no additional CO hotspot analysis is assumed to be necessary.

5. Odor Impact Assessment

Potential odor impacts will be evaluated in accordance with the 2017 PCAPCD CEQA Air Quality Handbook, which indicates that potential odor impacts should be acknowledged and discussed so that mitigation measures may be identified. The 2017 PCAPCD CEQA Air Quality Handbook indicates that one of the most important factors influencing odor impacts is the distance between the odor source and potential receptors (i.e., the buffer zone or setback). A greater buffer zone between the source and receptors results in a lower odor impact. The PCAPCD guidance lists a recommended odor screening distance of 1 mile for sanitary landfills and 2 miles for composting facilities. While not the only factor affecting potential odor impacts, the size of the proposed project buffer zone will be compared to the recommended odor screening distances as part of the odor impact analysis. The odor impact significance determination will be made in consideration of all recommended parameters, such as buffer distance, wind conditions and prevailing wind direction, and the facility's odor complaint history.

A Site Wide Odor Plan (SWOP) is currently under development and will include odor control measures proposed for implementation as part of the proposed project. Odor control measures identified in the SWOP will be described as part of the odor impact evaluation and taken into consideration when determining significance. If odor impacts are determined to be potentially significant after consideration of the SWOP, any additional mitigation measures determined to be feasible will be applied per CEQA requirements.

6. Health Impacts from Criteria Pollutants and Precursors (In Response to the Friant Ranch Decision)

The CEQA analysis will include discussion of the following:

- Health effects associated with exposure to criteria pollutants (potential references: ARB, EPA, Centers for Disease Control and Prevention, and American Lung Association), and EPA's and ARB's use of health studies to establish ambient air quality standards for criteria pollutants.
- Input from PCAPCD and Sacramento Metropolitan Air Quality Management District, as well as other agencies evaluating the impacts of the Friant Ranch legal findings on CEQA analyses and findings.
- Regarding the Friant Ranch Decision, the discussion of Standards of Significance for the proposed project will be modeled after the discussion of Standards of Significance in the FEIR for the Sunset Area Plan/Placer Ranch Specific Plan, to be consistent with that document and to make it clear that PCAPCD's thresholds are ultimately tied to public health (Placer County 2019).

7. References

California Air Pollution Control Officers Association (CAPCOA). 2010. *Quantifying Greenhouse Gas Mitigation Measures*. August.

California Air Pollution Control Officers Association (CAPCOA). 2017. *California Emissions Estimator Model (CalEEMod) User's Guide*. November.

California Air Resources Board (ARB). 2015. *ARB Emissions Inventory Methodology for Composting Facilities*. March.

Community Recycling and Resource Recovery, Inc., 2012. Final Environmental Impact Report for the Sun Valley - La Tuna Canyon Community Plan Area Community Recycling and Resource Recovery Facility. October.

GHG Protocol Initiative. Undated. *The GHG Protocol for Project Accounting*.

Niemeier et al. 1997. University of California, Davis. *Transportation Project-Level Carbon Monoxide Protocol*. December.

Office of Environmental Health Hazard Assessment (OEHHA). 2015. *Risk Assessment Guidelines: Guidance Manual for Preparation of Health Risk Assessments*. February.

Placer County Air Pollution Control District (PCAPCD). 2016a. *Review of Land Use Projects Under CEQA Policy*.

Placer County Air Pollution Control District (PCAPCD). 2016b. *California Environmental Quality Act Thresholds of Significance Justification Report*.

Placer County Air Pollution Control District (PCAPCD). 2017. *CEQA Air Quality Handbook*.

Placer County, Community Development Resource Agency, Planning Services Division (Placer County). 2019. *Final Environmental Impact Report for the Sunset Area Plan/Placer Ranch Specific Plan*. October.

Placer County, Community Development Resource Agency (Placer County). 2020. *Placer County Sustainability Plan*. January.

United States Environmental Protection Agency (EPA). 1995. AP 42, Fifth Edition, Compilation of Air Pollutant Emission Factors. Chapter 13.2.3, Heavy Construction Operations. January.

United States Environmental Protection Agency (EPA). 1996. AP-42, Fifth Edition, Compilation of Air Pollutant Emission Factors. Chapter 3.3, Gasoline and Diesel Industrial Engines. October.

United States Environmental Protection Agency (EPA). 2006. AP 42, Fifth Edition, Compilation of Air Pollutant Emission Factors. Chapter 13.2.4, Aggregate Handling and Storage Piles. November.

United States Environmental Protection Agency (EPA). 2006. AP-42, Fifth Edition, Compilation of Air Pollutant Emission Factors. Chapter 13.2.2, Unpaved Roads. November.

United States Environmental Protection Agency (EPA). 2011. AP 42, Fifth Edition, Compilation of Air Pollutant Emission Factors. Chapter 13.2.1, Paved Roads. January.

United States Environmental Protection Agency (EPA). 2018. *Municipal Solid Waste Landfills: Subpart HH, Greenhouse Gas Reporting Program*. February.

Waste Management, 2010. Air Quality Assessment for the Azusa Materials Recovery Facility and Transfer Station. City of Azusa. December 22.

Western Placer Waste Management Authority (WPWMA). 2019. *e-GGRT Reporting Year 2018 GHG Summary Report*. March.

Appendix C.2
Air Quality Emission Calculations: Criteria Pollutants, Greenhouse Gases, and Toxic Air Contaminants

NET Annual Emissions for Operational Year 2050
Plan Concept 1: Tons per Year (TPY)

Operational Year 2050-Baseline	Onsite Roads	Offsite Roads	Offroad Equipment	MSW Landfill Operation	Wind Erosion	Composting Ops	MRF Ops	C&D Wood Chip / Grind / Crush	Gasoline Generators	LFGTE Engines	Flares	Landfill Gas Fugitive	Electricity	Total (lbs/yr)	Total (tons/yr)
PM_{10}	55,78	0,77	0,09	2,92	0,31	1,08	1,33	2,09	0,00	0,01	0,95			130 636,65	65,32
$PM_{2.5}$	12,77	0,17	0,09	1,40	0,05	0,36	0,37	0,51	0,00	0,01	0,95			33 332,60	16,67
CO	0,39	1,36	23,51						0,01	55,43	5,61	0,29		173 183,22	86,59
NOx	1,14	3,63	3,91						0,01	13,30	1,68			47 365,91	23,68
SOx	0,00	0,01	0,05						0,00	0,04	1,87			3 966,58	1,98
VOC	0,01	0,08	0,00			-19,67			0,01	29,93	1,28	3,76		30 798,74	15,40
GHG															
Non-biogenic CO_2	4,86E+02	1,56E+03	5,69E+03						5,76E+00		1,63E+03		1,091E+03	2,093E+07	10 466
Biogenic CO_2						-4,39E+02				8,42E+03	3,02E+03	1,221E+03		2,444E+07	12 220
CH_4	1,43E-03	5,87E-03	1,77E-01			-8,87E+00			2,46E-04	5,18E-01	6,01E+00	4,448E+02	1,764E-01	8,857E+05	443
N_2O	5,54E-02	1,82E-01	7,94E-02			-6,65E-01			4,91E-05	1,02E-01	2,00E-02		2,139E-02	-4,111E+02	-0,21
Non-biogenic CO_2e	5,01E+02	1,61E+03	5,72E+03			-4,25E+02			5,78E+00	4,15E+01	1,81E+03	1,25E+04	1,10E+03	4,562E+07	22 811
Biogenic CO_2e						-4,39E+02				8,42E+03	3,02E+03	1,22E+03		2,444E+07	12 220
TACs															
Ammonia						1,60E+01								3,209E+04	16,05
Isopropyl Alcohol						-1,98E+01								-3,959E+04	-19,80
Methanol						-5,98E+00								-1,197E+04	-5,98
Naphthalene						-2,34E-01								-4,679E+02	-0,23
Acetaldehyde						-6,55E-02			2,85E-05					-1,310E+02	-0,07
Acrolein									3,44E-06					6,882E-03	0,00
Formaldehyde									4,39E-05					8,779E-02	0,00
PAH									6,25E-06					1,250E-02	0,00
1,1,1-Trichloroethane (methyl chloroform)										2,43E-04	6,63E-05	1,67E-03		3,952E+00	0,00
1,1,2,2-Tetrachloroethane										1,27E-04	3,47E-05	8,74E-04		2,072E+00	0,00
1,1-Dichloroethane										7,94E-04	2,17E-04	5,45E-03		1,293E+01	0,01
1,1-Dichloroethene										9,66E-05	2,64E-05	6,63E-04		1,572E+00	0,00
1,2-Dichloroethane (Ethylene Dichloride)										1,29E-04	3,51E-05	8,83E-04		2,094E+00	0,00
1,2-Dichloropropane										2,81E-05	7,68E-06	1,93E-04		4,582E-01	0,00
Acrylonitrile										2,07E-05	8,47E-07	1,42E-04		3,272E-01	0,00
Benzene									3,47E-05	8,22E-04	3,37E-05	5,65E-03		1,307E+01	0,01
Carbon Disulfide										2,64E-04	1,08E-05	1,81E-03		4,173E+00	0,00
Carbon Tetrachloride										1,17E-05	3,18E-06	8,01E-05		1,899E-01	0,00
Carbonyl Sulfide										1,51E-04	6,18E-06	1,04E-03		2,386E+00	0,00
Chlorobenzene										2,77E-04	7,56E-05	1,90E-03		4,505E+00	0,00
Chloroethane (Ethyl Chloride)										1,67E-04	4,56E-05	1,15E-03		2,719E+00	0,00
Chloroform										2,71E-05	7,41E-06	1,86E-04		4,421E-01	0,00
Dichloromethane (Methylene Chloride)										3,12E-03	8,53E-04	2,14E-02		5,084E+01	0,03
Ethylbenzene										7,80E-03	3,20E-04	5,36E-02		1,234E+02	0,06
Hexane										2,17E-03	8,88E-05	1,49E-02		3,430E+01	0,02
Mercury (Total)*										2,27E-05	8,66E-06	4,36E-06		7,134E-02	0,00
Methyl Ethyl Ketone										8,24E-03	3,38E-04	5,66E-02		1,304E+02	0,07
Methyl Isobutyl Ketone										8,13E-04	3,33E-05	5,59E-03		1,287E+01	0,01
Perchloroethylene (Tetrachloroethylene)										2,14E-03	5,85E-04	1,47E-02		3,488E+01	0,02
Toluene									1,52E-05	2,53E-02	1,04E-03	1,74E-01		4,009E+02	0,20
Trichloroethylene (Trichloroethene)										9,69E-04	2,65E-04	6,65E-03		1,577E+01	0,01
Vinyl Chloride										7,29E-04	1,99E-04	5,01E-03		1,187E+01	0,01
Xylenes									1,06E-05	1,91E-02	7,81E-04	1,31E-01		3,015E+02	0,15
Diesel Exhaust PM	2,209E-03	9,421E-03	8,507E-02											1,934E+02	0,10
Hydrochloric Acid (HCl)**										1,043E+00	3,990E-01			2,885E+03	1,44
Total TAC	2,21E-03	9,42E-03	8,51E-02	0,00E+00	0,00E+00	-1,00E+01	0,00E+00	0,00E+00	1,43E-04	1,12E+00	4,04E-01	5,05E-01		-1,58E+04	-7,91

Jacobs

NET Annual Emissions for Operational Year 2050
Plan Concept 1: Metric tons per Year (MT/yr)

Operational Year 2050-Baseline	Onsite Roads	Offsite Roads	Offroad Equipment	Composting Ops	Gasoline Generators	LFGTE Engines	Flares	Landfill Gas Fugitive	Electricity	Total (MT/yr)
GHG										
Non-biogenic CO_2	441,1	1 413	5 166		5,2		1 480		989	9 495
Biogenic CO_2				-398		7 641	2 736	1 107		11 086
CH_4	0,00	0,01	0,16	-8,05	0,00	0,47	5,45	403,55	0,16	401,75
N_2O	0,05	0,16	0,07	-0,60	0,00	0,09	0,02		0,02	-0,19
Non-biogenic CO_2e	454,4	1 457	5 190	-385,26	5,2	37,6	1 637,54	11 299,30	998,99	20 694,14
Biogenic CO_2e				-398,33		7 640,97	2 735,99	1 107,24		11 085,86

NET Annual Emissions for Operational Year 2050
Plan Concept 2: Tons per Year (TPY)

Operational Year 2050-Baseline	Onsite Roads	Offsite Roads	Offroad Equipment	MSW Spread/ Compact/ Exc/ Daily Cover	Wind Erosion	Composting Ops	MRF Ops	C&D Wood Chip / Grind / Crush	Gasoline Generators	LFGTE Engines	Flares	Landfill Gas Fugitive	Electricity	Total (lbs/yr)	Total (tons/yr)
PM_{10}	36,02	0,77	0,09	2,92	0,31	1,08	1,33	2,09	0,00	0,01	0,84			90 899,24	45,45
$PM_{2.5}$	8,68	0,17	0,09	1,40	0,05	0,36	0,37	0,51	0,00	0,01	0,84			24 940,39	12,47
CO	0,28	1,36	23,51						0,01	55,43	4,97	0,27		171 645,80	85,82
NOx	0,54	3,63	3,91						0,01	13,30	1,49			45 775,09	22,89
SOx	0,00	0,01	0,05						0,00	0,04	1,65			3 536,63	1,77
VOC	0,01	0,08	0,00			-19,67			0,01	29,93	1,13	3,54		30 072,90	15,04
GHG															
Non-biogenic CO_2	2,81E+02	1,56E+03	5,69E+03						5,76E+00		1,87E+03		1,091E+03	2,101E+07	10 504
Biogenic CO_2						-4,39E+02				8,42E+03	3,46E+03	1,282E+03		2,546E+07	12 730
CH_4	1,08E-03	5,87E-03	1,77E-01			-8,87E+00			2,46E-04	5,18E-01	6,90E+00	4,671E+02	1,764E-01	9,321E+05	466
N_2O	2,80E-02	1,82E-01	7,94E-02			-6,65E-01			4,91E-05	1,02E-01	2,30E-02		2,139E-02	-4,599E+02	-0,23
Non-biogenic CO_2e	2,89E+02	1,61E+03	5,72E+03			-4,25E+02			5,78E+00	4,15E+01	2,07E+03	1,31E+04	1,10E+03	4,698E+07	23 492
Biogenic CO_2e						-4,39E+02				8,42E+03	3,46E+03	1,28E+03		2,546E+07	12 730
TACs															
Ammonia						1,60E+01								3,209E+04	16,05
Isopropyl Alcohol						-1,98E+01								-3,959E+04	-19,80
Methanol						-5,98E+00								-1,197E+04	-5,98
Naphthalene						-2,34E-01								-4,679E+02	-0,23
Acetaldehyde						-6,55E-02			2,85E-05					-1,310E+02	-0,07
Acrolein									3,44E-06					6,882E-03	0,00
Formaldehyde									4,39E-05					8,779E-02	0,00
PAH									6,25E-06					1,250E-02	0,00
1,1,1-Trichloroethane (methyl chloroform)										2,43E-04	5,87E-05	1,57E-03		3,748E+00	0,00
1,1,2,2-Tetrachloroethane										1,27E-04	3,08E-05	8,24E-04		1,964E+00	0,00
1,1-Dichloroethane										7,94E-04	1,92E-04	5,14E-03		1,226E+01	0,01
1,1-Dichloroethene										9,66E-05	2,34E-05	6,26E-04		1,491E+00	0,00
1,2-Dichloroethane (Ethylene Dichloride)										1,29E-04	3,11E-05	8,33E-04		1,985E+00	0,00
1,2-Dichloropropane										2,81E-05	6,81E-06	1,82E-04		4,345E-01	0,00
Acrylonitrile										2,07E-05	7,51E-07	1,34E-04		3,109E-01	0,00
Benzene									3,47E-05	8,22E-04	2,98E-05	5,33E-03		1,243E+01	0,01
Carbon Disulfide										2,64E-04	9,57E-06	1,71E-03		3,965E+00	0,00
Carbon Tetrachloride										1,17E-05	2,82E-06	7,55E-05		1,800E-01	0,00
Carbonyl Sulfide										1,51E-04	5,47E-06	9,77E-04		2,267E+00	0,00
Chlorobenzene										2,77E-04	6,69E-05	1,79E-03		4,272E+00	0,00
Chloroethane (Ethyl Chloride)										1,67E-04	4,04E-05	1,08E-03		2,578E+00	0,00
Chloroform										2,71E-05	6,57E-06	1,76E-04		4,192E-01	0,00
Dichloromethane (Methylene Chloride)										3,12E-03	7,55E-04	2,02E-02		4,821E+01	0,02
Ethylbenzene										7,80E-03	2,83E-04	5,06E-02		1,173E+02	0,06
Hexane										2,17E-03	7,87E-05	1,40E-02		3,259E+01	0,02
Mercury (Total)*										2,27E-05	7,67E-06	4,11E-06		6,887E-02	0,00
Methyl Ethyl Ketone										8,24E-03	2,99E-04	5,34E-02		1,239E+02	0,06
Methyl Isobutyl Ketone										8,13E-04	2,95E-05	5,27E-03		1,223E+01	0,01
Perchloroethylene (Tetrachloroethylene)										2,14E-03	5,18E-04	1,39E-02		3,308E+01	0,02
Toluene									1,52E-05	2,53E-02	9,20E-04	1,64E-01		3,809E+02	0,19
Trichloroethylene (Trichloroethene)										9,69E-04	2,34E-04	6,28E-03		1,496E+01	0,01
Vinyl Chloride										7,29E-04	1,76E-04	4,72E-03		1,125E+01	0,01
Xylenes									1,06E-05	1,91E-02	6,92E-04	1,23E-01		2,865E+02	0,14
Diesel Exhaust PM	1,471E-03	9,421E-03	8,507E-02											1,919E+02	0,10
Hydrochloric Acid (HCl)**										1,043E+00	3,534E-01			2,793E+03	1,40
Total TAC	1,47E-03	9,42E-03	8,51E-02	0,00E+00	0,00E+00	-1,00E+01	0,00E+00	0,00E+00	1,43E-04	1,12E+00	3,58E-01	4,77E-01		-1,60E+04	-7,99

Jacobs

NET Annual Emissions for Operational Year 2050
Plan Concept 2: Metric tons per Year (MT/yr)

Operational Year 2050-Baseline	Onsite Roads	Offsite Roads	Offroad Equipment	Composting Ops	Gasoline Generators	LFGTE Engines	Flares	Landfill Gas Fugitive	Electricity	Total (MT/yr)
GHG										
Non-biogenic CO_2	255,14	1 412,96	5 165,92		5,22		1 700,39		989,36	9 529,00
Biogenic CO_2				-398,33		7 640,97	3 143,14	1 162,75		11 548,52
CH_4	0,00	0,01	0,16	-8,05	0,00	0,47	6,26	423,78	0,16	422,79
N_2O	0,03	0,16	0,07	-0,60	0,00	0,09	0,02		0,02	-0,21
Non-biogenic CO_2e	261,90	1 456,77	5 189,51	-385,26	5,24	37,65	1 881,23	11 865,76	998,99	21 311,78
Biogenic CO_2e				-398,33		7 640,97	3 143,14	1 162,75		11 548,52

NET Daily Emissions for Operational Year 2050
Plan Concept 1: Pounds per Day (lb/day)

Operational Day 2050-Baseline	Onsite Roads	Offsite Roads	Offroad Equipment	MSW Spread/ Compact/ Exc/ Daily Cover	Wind Erosion	Composting Ops	MRF Ops	C&D Wood Chip / Grind / Crush	Gasoline Generators	LFGTE Engines	Flares	Landfill Gas Fugitive	Total (lb/day)
PM_{10}	391,8	5,4	0,7	28,7	1,7	10,6	13,1	20,3	0,1	0,0	5,2		477,7
$PM_{2.5}$	89,7	1,2	0,7	13,8	0,3	3,5	2,0	5,4	0,1	0,0	5,2		121,9
CO	2,7	9,5	193,3						0,3	303,7	30,7	1,6	541,9
NOx	8,0	25,5	32,1						0,5	72,9	9,2		148,3
SOx	0,0	0,1	0,4						0,1	0,2	10,2		11,1
VOC	0,1	0,6	5,3			-193,4			0,7	164,0	7,0	20,6	4,8
TACs													
Ammonia						1,58E+02							157,7233
Isopropyl Alcohol						-1,95E+02							-194,5823
Methanol						-5,88E+01							-58,8208
Naphthalene						-2,30E+00							-2,2995
Acetaldehyde						-6,44E-01			1,43E-03				-0,6424
Acrolein									1,72E-04				0,0002
Formaldehyde									2,19E-03				0,0022
PAH									3,12E-04				0,0003
1,1,1-Trichloroethane (methyl chloroform)										1,33E-03	1,51E-05	3,81E-04	0,0017
1,1,2,2-Tetrachloroethane										6,97E-04	7,93E-06	2,00E-04	0,0009
1,1-Dichloroethane										4,35E-03	4,95E-05	1,25E-03	0,0056
1,1-Dichloroethene										5,29E-04	6,02E-06	1,51E-04	0,0007
1,2-Dichloroethane (Ethylene Dichloride)										7,05E-04	8,02E-06	2,02E-04	0,0009
1,2-Dichloropropane										1,54E-04	1,75E-06	4,41E-05	0,0002
Acrylonitrile										1,13E-04	1,93E-07	3,24E-05	0,0001
Benzene									1,74E-03	4,50E-03	7,69E-06	1,29E-03	0,0075
Carbon Disulfide										1,45E-03	2,47E-06	4,14E-04	0,0019
Carbon Tetrachloride										6,39E-05	7,27E-07	1,83E-05	0,0001
Carbonyl Sulfide										8,27E-04	1,41E-06	2,37E-04	0,0011
Chlorobenzene										1,52E-03	1,73E-05	4,34E-04	0,0020
Chloroethane (Ethyl Chloride)										9,15E-04	1,04E-05	2,62E-04	0,0012
Chloroform										1,49E-04	1,69E-06	4,26E-05	0,0002
Dichloromethane (Methylene Chloride)										1,71E-02	1,95E-04	4,90E-03	0,0222
Ethylbenzene										4,28E-02	7,30E-05	1,22E-02	0,0551
Hexane										1,19E-02	2,03E-05	3,40E-03	0,0153
Mercury (Total)*										1,24E-04	1,98E-06	9,95E-07	0,0001
Methyl Ethyl Ketone										4,52E-02	7,71E-05	1,29E-02	0,0582
Methyl Isobutyl Ketone										4,46E-03	7,61E-06	1,28E-03	0,0057
Perchloroethylene (Tetrachloroethylene)										1,17E-02	1,34E-04	3,36E-03	0,0152
Toluene									7,61E-04	1,39E-01	2,37E-04	3,97E-02	0,1796
Trichloroethylene (Trichloroethene)										5,31E-03	6,04E-05	1,52E-03	0,0069
Vinyl Chloride										3,99E-03	4,54E-05	1,14E-03	0,0052
Xylenes									5,30E-04	1,04E-01	1,78E-04	2,99E-02	0,1350
Diesel Exhaust PM	1,552E-02	6,621E-02	6,995E-01										0,7812
Hydrochloric Acid (HCl)**										5,717E+00	9,108E-02		5,8079
Total TAC	1,55E-02	6,62E-02	6,99E-01	0,00E+00	0,00E+00	-9,86E+01	0,00E+00	0,00E+00	7,13E-03	6,12E+00	9,22E-02	1,15E-01	-91,51

NET Daily Emissions for Operational Year 2050
Plan Concept 2: Pounds per Day (lb/day)

Operational Day 2050-Baseline	Onsite Roads	Offsite Roads	Offroad Equipment	MSW Spread/ Compact/ Exc/ Daily Cover	Wind Erosion	Composting Ops	MRF Ops	C&D Wood Chip / Grind / Crush	Gasoline Generators	LFGTE Engines	Flares	Landfill Gas Fugitive	Total (lb/day)
PM_{10}	253,2	5,4	0,7	28,7	1,7	10,6	13,1	20,3	0,1	0,0	4,6		338,5
$PM_{2.5}$	61,0	1,2	0,7	13,8	0,3	3,5	2,0	5,4	0,1	0,0	4,6		92,6
CO	2,0	9,5	193,3						0,3	303,7	27,2	1,5	537,6
NOx	3,8	25,5	32,1						0,5	72,9	8,2		143,0
SOx	0,0	0,1	0,4						0,1	0,2	9,1		9,9
VOC	0,1	0,6	5,3			-193,4			0,7	164,0	6,2	19,4	2,9
TACs													
Ammonia						1,58E+02							157,7233
Isopropyl Alcohol						-1,95E+02							-194,5823
Methanol						-5,88E+01							-58,8208
Naphthalene						-2,30E+00							-2,2995
Acetaldehyde						-6,44E-01			1,43E-03				-0,6424
Acrolein									1,72E-04				0,0002
Formaldehyde									2,19E-03				0,0022
PAH									3,12E-04				0,0003
1,1,1-Trichloroethane (methyl chloroform)										1,33E-03	1,34E-05	3,59E-04	0,0017
1,1,2,2-Tetrachloroethane										6,97E-04	7,03E-06	1,88E-04	0,0009
1,1-Dichloroethane										4,35E-03	4,39E-05	1,17E-03	0,0056
1,1-Dichloroethene										5,29E-04	5,33E-06	1,43E-04	0,0007
1,2-Dichloroethane (Ethylene Dichloride)										7,05E-04	7,10E-06	1,90E-04	0,0009
1,2-Dichloropropane										1,54E-04	1,55E-06	4,16E-05	0,0002
Acrylonitrile										1,13E-04	1,71E-07	3,06E-05	0,0001
Benzene									1,74E-03	4,50E-03	6,81E-06	1,22E-03	0,0075
Carbon Disulfide										1,45E-03	2,19E-06	3,90E-04	0,0018
Carbon Tetrachloride										6,39E-05	6,44E-07	1,72E-05	0,0001
Carbonyl Sulfide										8,27E-04	1,25E-06	2,23E-04	0,0011
Chlorobenzene										1,52E-03	1,53E-05	4,09E-04	0,0019
Chloroethane (Ethyl Chloride)										9,15E-04	9,22E-06	2,47E-04	0,0012
Chloroform										1,49E-04	1,50E-06	4,02E-05	0,0002
Dichloromethane (Methylene Chloride)										1,71E-02	1,72E-04	4,62E-03	0,0219
Ethylbenzene										4,28E-02	6,47E-05	1,15E-02	0,0544
Hexane										1,19E-02	1,80E-05	3,21E-03	0,0151
Mercury (Total)*										1,24E-04	1,75E-06	9,38E-07	0,0001
Methyl Ethyl Ketone										4,52E-02	6,83E-05	1,22E-02	0,0574
Methyl Isobutyl Ketone										4,46E-03	6,74E-06	1,20E-03	0,0057
Perchloroethylene (Tetrachloroethylene)										1,17E-02	1,18E-04	3,17E-03	0,0150
Toluene									7,61E-04	1,39E-01	2,10E-04	3,75E-02	0,1773
Trichloroethylene (Trichloroethene)										5,31E-03	5,35E-05	1,43E-03	0,0068
Vinyl Chloride										3,99E-03	4,03E-05	1,08E-03	0,0051
Xylenes									5,30E-04	1,04E-01	1,58E-04	2,82E-02	0,1333
Diesel Exhaust PM	1,034E-02	6,621E-02	6,995E-01										0,7760
Hydrochloric Acid (HCl)**										5,717E+00	8,068E-02		5,7975
Total TAC	1,03E-02	6,62E-02	6,99E-01	0,00E+00	0,00E+00	-9,86E+01	0,00E+00	0,00E+00	7,13E-03	6,12E+00	8,17E-02	1,09E-01	

NET Hourly Emissions for Operational Year 2050
Plan Concept 1: Pounds per Day (lb/hr)

Operational Hour 2050-Baseline	Onsite Roads	Offsite Roads	Offroad Equipment	MSW Spread/ Compact/ Exc/ Daily Cover	Wind Erosion	Composting Ops	MRF Ops	C&D Wood Chip / Grind / Crush	Gasoline Generators	LFGTE Engines	Flares	Landfill Gas Fugitive	Total (lb/hr)
PM_{10}	28,00	0,39	0,09	2,05	0,07	0,65	0,94	18,01	0,10	0,00	0,22		50,53
$PM_{2.5}$	6,41	0,08	0,09	0,98	0,01	0,22	0,15	2,81	0,10	0,00	0,22		11,07
CO	0,20	0,68	25,03						0,31	12,65	1,28	0,07	40,22
NOx	0,57	1,82	5,05						0,50	3,04	0,38		11,36
SOx	0,00	0,01	0,06						0,09	0,01	0,43		0,59
VOC	0,01	0,04	0,68			-8,06			0,68	6,83	0,29	0,86	1,32
TACs													
Ammonia						6,57E+00							6,5718
Isopropyl Alcohol						-8,11E+00							-8,1076
Methanol						-9,33E+00							-9,3347
Naphthalene						-9,58E-02							-0,0958
Acetaldehyde						-2,68E-02			1,43E-03				-0,0254
Acrolein									1,72E-04				0,0002
Formaldehyde									2,19E-03				0,0022
PAH									3,12E-04				0,0003
1,1,1-Trichloroethane (methyl chloroform)										5,54E-05	1,51E-05	3,81E-04	0,0005
1,1,2,2-Tetrachloroethane										2,90E-05	7,93E-06	2,00E-04	0,0002
1,1-Dichloroethane										1,81E-04	4,95E-05	1,25E-03	0,0015
1,1-Dichloroethene										2,20E-05	6,02E-06	1,51E-04	0,0002
1,2-Dichloroethane (Ethylene Dichloride)										2,94E-05	8,02E-06	2,02E-04	0,0002
1,2-Dichloropropane										6,42E-06	1,75E-06	4,41E-05	0,0001
Acrylonitrile										4,72E-06	1,93E-07	3,24E-05	0,0000
Benzene									1,74E-03	1,88E-04	7,69E-06	1,29E-03	0,0032
Carbon Disulfide										6,02E-05	2,47E-06	4,14E-04	0,0005
Carbon Tetrachloride										2,66E-06	7,27E-07	1,83E-05	0,0000
Carbonyl Sulfide										3,44E-05	1,41E-06	2,37E-04	0,0003
Chlorobenzene										6,32E-05	1,73E-05	4,34E-04	0,0005
Chloroethane (Ethyl Chloride)										3,81E-05	1,04E-05	2,62E-04	0,0003
Chloroform										6,20E-06	1,69E-06	4,26E-05	0,0001
Dichloromethane (Methylene Chloride)										7,13E-04	1,95E-04	4,90E-03	0,0058
Ethylbenzene										1,78E-03	7,30E-05	1,22E-02	0,0141
Hexane										4,95E-04	2,03E-05	3,40E-03	0,0039
Mercury (Total)*										5,17E-06	1,98E-06	9,95E-07	0,0000
Methyl Ethyl Ketone										1,88E-03	7,71E-05	1,29E-02	0,0149
Methyl Isobutyl Ketone										1,86E-04	7,61E-06	1,28E-03	0,0015
Perchloroethylene (Tetrachloroethylene)										4,89E-04	1,34E-04	3,36E-03	0,0040
Toluene									7,61E-04	5,79E-03	2,37E-04	3,97E-02	0,0465
Trichloroethylene (Trichloroethene)										2,21E-04	6,04E-05	1,52E-03	0,0018
Vinyl Chloride										1,66E-04	4,54E-05	1,14E-03	0,0014
Xylenes									5,30E-04	4,35E-03	1,78E-04	2,99E-02	0,0350
Diesel Exhaust PM	1,109E-03	4,729E-03	9,441E-02										0,1002
Hydrochloric Acid (HCl)**										2,382E-01	9,108E-02		0,3293
Total TAC	1,11E-03	4,73E-03	9,44E-02	0,00E+00	0,00E+00	-1,10E+01	0,00E+00	0,00E+00	7,13E-03	2,55E-01	9,22E-02	1,15E-01	

NET Hourly Emissions for Operational Year 2050
Plan Concept 2: Pounds per Day (lb/hr)

Operational Hour 2050-Baseline	Onsite Roads	Offsite Roads	Offroad Equipment	MSW Spread/ Compact/ Exc/ Daily Cover	Wind Erosion	Composting Ops	MRF Ops	C&D Wood Chip / Grind / Crush	Gasoline Generators	LFGTE Engines	Flares	Landfill Gas Fugitive	Total (lb/hr)
PM_{10}	18,08	0,39	0,09	2,05	0,07	0,65	0,94	18,01	0,10	0,00	0,19		40,58
$PM_{2.5}$	4,36	0,08	0,09	0,98	0,01	0,22	0,15	2,81	0,10	0,00	0,19		9,00
CO	0,14	0,68	25,03						0,31	12,65	1,13	0,06	40,02
NOx	0,27	1,82	5,05						0,50	3,04	0,34		11,02
SOx	0,00	0,01	0,06						0,09	0,01	0,38		0,55
VOC	0,01	0,04	0,68			-8,06			0,68	6,83	0,26	0,81	1,24
TACs													
Ammonia						6,57E+00							6,5718
Isopropyl Alcohol						-8,11E+00							-8,1076
Methanol						-9,33E+00							-9,3347
Naphthalene						-9,58E-02							-0,0958
Acetaldehyde						-2,68E-02			1,43E-03				-0,0254
Acrolein									1,72E-04				0,0002
Formaldehyde									2,19E-03				0,0022
PAH									3,12E-04				0,0003
1,1,1-Trichloroethane (methyl chloroform)										5,54E-05	1,34E-05	3,59E-04	0,0004
1,1,2,2-Tetrachloroethane										2,90E-05	7,03E-06	1,88E-04	0,0002
1,1-Dichloroethane										1,81E-04	4,39E-05	1,17E-03	0,0014
1,1-Dichloroethene										2,20E-05	5,33E-06	1,43E-04	0,0002
1,2-Dichloroethane (Ethylene Dichloride)										2,94E-05	7,10E-06	1,90E-04	0,0002
1,2-Dichloropropane										6,42E-06	1,55E-06	4,16E-05	0,0000
Acrylonitrile										4,72E-06	1,71E-07	3,06E-05	0,0000
Benzene									1,74E-03	1,88E-04	6,81E-06	1,22E-03	0,0031
Carbon Disulfide										6,02E-05	2,19E-06	3,90E-04	0,0005
Carbon Tetrachloride										2,66E-06	6,44E-07	1,72E-05	0,0000
Carbonyl Sulfide										3,44E-05	1,25E-06	2,23E-04	0,0003
Chlorobenzene										6,32E-05	1,53E-05	4,09E-04	0,0005
Chloroethane (Ethyl Chloride)										3,81E-05	9,22E-06	2,47E-04	0,0003
Chloroform										6,20E-06	1,50E-06	4,02E-05	0,0000
Dichloromethane (Methylene Chloride)										7,13E-04	1,72E-04	4,62E-03	0,0055
Ethylbenzene										1,78E-03	6,47E-05	1,15E-02	0,0134
Hexane										4,95E-04	1,80E-05	3,21E-03	0,0037
Mercury (Total)*										5,17E-06	1,75E-06	9,38E-07	0,0000
Methyl Ethyl Ketone										1,88E-03	6,83E-05	1,22E-02	0,0141
Methyl Isobutyl Ketone										1,86E-04	6,74E-06	1,20E-03	0,0014
Perchloroethylene (Tetrachloroethylene)										4,89E-04	1,18E-04	3,17E-03	0,0038
Toluene									7,61E-04	5,79E-03	2,10E-04	3,75E-02	0,0442
Trichloroethylene (Trichloroethene)										2,21E-04	5,35E-05	1,43E-03	0,0017
Vinyl Chloride										1,66E-04	4,03E-05	1,08E-03	0,0013
Xylenes									5,30E-04	4,35E-03	1,58E-04	2,82E-02	0,0332
Diesel Exhaust PM	7,385E-04	4,729E-03	9,441E-02										0,0999
Hydrochloric Acid (HCl)**										2,382E-01	8,068E-02		0,3189
Total TAC	7,39E-04	4,73E-03	9,44E-02	0,00E+00	0,00E+00	-1,10E+01	0,00E+00	0,00E+00	7,13E-03	2,55E-01	8,17E-02	1,09E-01	

WPWMA Composting Facility Operations
Composting Emissions Net Increase in 2050 from 2018 Baseline

Operating Parameters

Parameter	Units	Operation	Notes
Operational Parameter			
Hours of Operation - Composting Ops (screen, load, unload)	hours/day	10	Data Request Info
Hours of Operation for Stockpiles and Compost Piles	hours/day	24	
Operational Days per Year	days/year	261	Data Request Info
Greenwaste/Food Waste/Wood Waste Throughput per hour (2018)	(2018) wet tons/hr	12,4	WAP Flow Chart (2018)
Greenwaste/Food Waste/Wood Waste Throughput per hour (2050)	(2050) wet tons/hr	32,3	WAP Flow Chart (2050, inc div)
Greenwaste/Food Waste/Wood Waste Throughput per Day (2018)	(2018) wet tons/day	298	WAP Flow Chart (2018)
Greenwaste/Food Waste/Wood Waste Throughput per Day (2050)	(2050) wet tons/day	776	WAP Flow Chart (2050, inc div)
Daily Site-Wide Peaking Factor	Peak tpd/Avg tpd	1,28265	WAP Flow Chart
Greenwaste/Food Waste/Wood Waste Throughput per Year (TP) (2018)	(2018) wet tons/yr	60 606	WAP Flow Chart (2018)
Greenwaste/Food Waste/Wood Waste Throughput per Year (TP) (2050)	2050 wet tons/yr	157 806	WAP Flow Chart (2050, inc div)
Stockpile Hold Time (SD)	days	7	Note 11 Data Request Info
No. of Load/Unload Operations per Batch - pre-compost	operations/batch	3	12
No. of Load/Unload Operations per Batch - during/after compost	operations/batch	3	13
Weight of greenwaste per batch	lbs/batch		7
Number of batches per ton greenwaste processed	tons/batch		
Compost Process Rate	batches/day		
Compost Process Rate	batches/year		

SOURCE DESCRIPTION	EMISSION CONTROL TYPE	CONTROL EFFICIENCY						
		VOC	NH_3	PM_{10}	$PM_{2.5}$	CO_2	CH_4	N_2O
		CONTROL EFFICIENCY	CONTROL EFFICIENCY	CONTROL EFFICIENCY	CONTROL EFFICIENCY	CONTROL EFFICIENCY	CONTROL EFFICIENCY	CONTROL EFFICIENCY
		%	%	%	%	%	%	%
Stockpiles (Uncontrolled)	Uncontrolled stockpiling	0%	0%					
Composting - Active (Future 2050) (Aerated Static Pile & 12" Biofilter Compost Cap)	ASP/Biofilter [8,19]	80%	53%			70%	70%	70%
Composting - Curing	Uncontrolled curing	0%	0%			0%	0%	0%
Compost Screening Operations	Controlled screening			50%	50%			
Greenwaste Grinder Operations	Controlled grinder			50%	50%			
Load/Unload Operations - pre-compost[9]	Uncontrolled loading/unloading			0%	0%			
Load/Unload Operations - during/after compost[10]	Wet Suppression loading/unloading			50%	50%			

Emission Factors	Units	Notes	Emission Factor Parameters						
			VOC	NH_3	PM_{10}	$PM_{2.5}$	CO_2	CH_4	N_2O
Uncontrolled Stockpile Emission Factor (SEF)	lbs/wet-ton-day	1,14	0,2	0,02					
Compost Processing Emission Factor (CPEF)	lbs/wet-ton	1	3,58	0,78					
CO_2 Emissions fom Composting	lb CO_2/lb dry solids	4					0,44		
CH_4 and N_2O Emissions fom Composting	lb CH_4 or N_2O/ wet lb waste treated	4						0,004	0,0003
Emissions during active phase of composting	%	2,3,18	90%	70%			90%	90%	90%
Emissions during curing phase of composting	%	2,3,18	10%	30%			10%	10%	10%
Emissions during Compost Screening	lbs/ton	5			0,0144	0,0072			
Emissions during Grinder Screening	lbs/ton	5			0,0144	0,0072			
k = Particle Size Multiplier		6			0,35	0,053			
U = Mean Wind Speed, from Wind Erosion analysis	mph	6, 16			6,60	6,60			

WPWMA Composting Facility Operations
Composting Emissions Net Increase in 2050 from 2018 Baseline

SOURCE DESCRIPTION	PROCESS RATE (tons/hr)	Moisture Content %	EMISSION FACTORS							
			VOC EMISSION FACTOR (lbs/wet-ton)	NH_3 EMISSION FACTOR (lbs/wet-ton)	PM_{10} EMISSION FACTOR (lbs/ton)	$PM_{2.5}$ EMISSION FACTOR (lbs/ton)	CO_2 EMISSION FACTOR (lb/wet ton)	CH_4 EMISSION FACTOR (lb/wet ton)	N_2O EMISSION FACTOR (lb/wet ton)	EMISSION FACTOR TYPE
Stockpiles (Uncontrolled)	77,6	2								Uncontrolled stockpiling
Composting - Active with ASP (2050)	32,3	55	0,64	0,2566			107	2,16E+00	1,62E-01	ASP[8,19]
Composting - Active Windrows (2018)	12,4	55	3,22	0,546			356	7,20E+00	5,40E-01	Uncontrolled Windrows
Composting - Curing	19,9	55	0,358	0,234			39,6	8,00E-01	6,00E-02	Uncontrolled curing[19]
Compost Screening Operations	47,8	55			7,20E-03	3,60E-03				Controlled screening
Compost Grinder Operations	47,8	55			7,20E-03	3,60E-03				Controlled screening
Load/Unload Operations - pre-compost[9]	47,8	2			1,61E-03	2,43E-04				Uncontrolled loading/unloading
Load/Unload Operations - during/after compost[10]	47,8	55			1,55E-05	2,35E-06				Uncontrolled loading/unloading

SOURCE DESCRIPTION	PROCESS RATE (tons/hr)	Moisture Content %	TAC EMISSION FACTORS				
			Isopropyl Alcohol EMISSION FACTOR (lbs/wet-ton)	Methanol EMISSION FACTOR (lbs/wet-ton)	Naphthalene EMISSION FACTOR (lbs/ton)	Acetaldehyde EMISSION FACTOR (lbs/ton)	EMISSION FACTOR NOTE
Composting - Active with ASP (2050)	32,3	55	0,27	0,082	0,003	0,0009	20
Composting - Active Windrows (2018)	12,4	55	1,36	0,412	0,016	0,005	20

SOURCE DESCRIPTION	COMPOSTING EMISSIONS CALCULATIONS (HOURLY) Net difference from 2018 to 2050										
	VOC EMISSIONS (lbs/hr)	NH_3 EMISSIONS (lbs/hr)	PM_{10} EMISSIONS (lbs/hr)	$PM_{2.5}$ EMISSIONS (lbs/hr)	CO_2 EMISSIONS (lbs/hr)	CH_4 EMISSIONS (lbs/hr)	N_2O EMISSIONS (lbs/hr)	Isopropyl Alcohol EMISSIONS (lbs/hr)	Methanol EMISSIONS (lbs/hr)	Naphthalene EMISSIONS (lbs/hr)	Acetaldehyde EMISSIONS (lbs/hr)
Stockpiles (Uncontrolled)	3,98	0,398									
Composting - Active with ASP (100%) Net difference from 2018 to 2050	-19,16	1,52			-968	-20	-1	-8	-9,33	-0,10	-0,03
Composting - Curing	7,13	4,66			788,17	15,92	1,19				
Compost Screening Operations			1,72E-01	8,60E-02							
Compost Grinder Operations			1,72E-01	8,60E-02							
Truck Unload to Stockpile - pre-compost[9]			7,68E-02	1,16E-02							
Unload Greenwaste to Grinder - pre-compost[9]			7,68E-02	1,16E-02							
Unload Greenwaste to Screener - pre-compost[9]			7,68E-02	1,16E-02							
Unload Greenwaste to Active w ASP - pre-compost[9]			7,68E-02	1,16E-02							
Unload Compost to Curing - during-compost[10]			3,71E-04	5,61E-05							
Unload Cured Compost to Screen - post-compost[10]			3,71E-04	5,61E-05							
Load Final Compost to Truck - post-compost[10]			3,71E-04	5,61E-05							

SOURCE DESCRIPTION	COMPOSTING EMISSIONS CALCULATIONS (DAILY) Net difference from 2018 to 2050										
	VOC EMISSIONS (lbs/day)	NH_3 EMISSIONS (lbs/day)	PM_{10} EMISSIONS (lbs/day)	$PM_{2.5}$ EMISSIONS (lbs/day)	CO_2 EMISSIONS (lbs/day)	CH_4 EMISSIONS (lbs/day)	N_2O EMISSIONS (lbs/day)	Isopropyl Alcohol EMISSIONS (lbs/day)	Methanol EMISSIONS (lbs/day)	Naphthalene EMISSIONS (lbs/day)	Acetaldehyde EMISSIONS (lbs/day)
Stockpiles (Uncontrolled)	95,5	9,55									
Composting - Active with ASP (100%) Net difference from 2018 to 2050	-459,9	36,4			-23 232	-469	-35,20	-195	-59	-2,3	-0,6
Composting - Curing	171,0	111,8			18 916	382,1	28,66				
Compost Screening Operations			2,79	1,40							
Compost Grinder Operations			2,79	1,40							
Truck Unload to Stockpile - pre-compost[9]			1,25	0,189							
Unload Greenwaste to Grinder - pre-compost[9]			1,25	0,189							
Unload Greenwaste to Screener - pre-compost[9]			1,25	0,189							
Unload Greenwaste to Active w ASP - pre-compost[9]			1,25	0,189							
Unload Compost to Curing - during-compost[10]			0,01	0,001							
Unload Cured Compost to Screen - post-compost[10]			0,01	0,001							
Load Final Compost to Truck - post-compost[10]			0,01	0,001							

WPWMA Composting Facility Operations
Composting Emissions Net Increase in 2050 from 2018 Baseline

SOURCE DESCRIPTION	COMPOSTING EMISSIONS CALCULATIONS (ANNUAL) Net difference from 2018 to 2050										
	VOC EMISSIONS (lbs/yr)	NH_3 EMISSIONS (lbs/yr)	PM_{10} EMISSIONS (lbs/yr)	$PM_{2.5}$ EMISSIONS (lbs/yr)	CO_2 EMISSIONS (lbs/yr)	CH_4 EMISSIONS (lbs/yr)	N_2O EMISSIONS (lbs/yr)	Isopropyl Alcohol EMISSIONS (lbs/yr)	Methanol EMISSIONS (lbs/yr)	Naphthalene EMISSIONS (lbs/yr)	Acetaldehyde EMISSIONS (lbs/yr)
Stockpiles (Uncontrolled)	19 440	1 944									
Composting - Active with ASP (100%) Net difference from 2018 to 2050	-93 582	7 405			-4 727 313	-95 501	-7 163	-39 595	-11 969	-468	-131
Composting - Curing	34 798	22 745			3 849 138	77 760	5 832				
Compost Screening Operations			568	284							
Compost Grinder Operations			568	284							
Truck Unload to Stockpile - pre-compost[9]			254	38,4							
Unload Greenwaste to Grinder - pre-compost[9]			254	38,4							
Unload Greenwaste to Screener - pre-compost[9]			254	38,4							
Unload Greenwaste to Active w ASP - pre-compost[9]			254	38,4							
Unload Compost to Curing - during-compost[10]			1,22	0,19							
Unload Cured Compost to Screen - post-compost[10]			1,22	0,19							
Load Final Compost to Truck - post-compost[10]			1,22	0,19							

SOURCE DESCRIPTION	COMPOSTING EMISSIONS CALCULATIONS (ANNUAL) tpy									
					CO_2		CH_4		N_2O	
	VOC EMISSIONS (tpy)	NH_3 EMISSIONS (tpy)	PM_{10} EMISSIONS (tpy)	$PM_{2.5}$ EMISSIONS (tpy)	BIOGENIC EMISSIONS (tpy)	BIOGENIC EMISSIONS (MT/yr)	NON-BIOGENIC EMISSIONS (tpy)	NON-BIOGENIC EMISSIONS (MT/yr)	NON-BIOGENIC EMISSIONS (tpy)	NON-BIOGENIC EMISSIONS (MT/yr)
Stockpiles (Uncontrolled)	9,72	0,972								
Composting - Active with ASP (100%) Net difference from 2018 to 2050	-46,79	3,70			-2 364	-2 144	-48	-43	-3,58	-3,25
Composting - Curing	17,40	11,37			1925	1746	38,9	35,3	2,916	2,645
Compost Screening Operations			0,284	0,142						
Compost Grinder Operations			0,284	0,142						
Truck Unload to Stockpile - pre-compost[9]			0,127	0,0192						
Unload Greenwaste to Grinder - pre-compost[9]			0,127	0,0192						
Unload Greenwaste to Screener - pre-compost[9]			0,127	0,0192						
Unload Greenwaste to Active w ASP - pre-compost[9]			0,127	0,0192						
Unload Compost to Curing - during-compost[10]			0,001	0,0001						
Unload Cured Compost to Screen - post-compost[10]			0,001	0,0001						
Load Final Compost to Truck - post-compost[10]			0,001	0,0001						

Calculated Emissions Net difference from 2018 to 2050	Units	VOC	NH_3	PM_{10}	$PM_{2.5}$	CO_2	CH_4	N_2O	Isopropyl Alcohol	Methanol	Naphthalene	Acetaldehyde
Hourly Emissions	lb/hour	-8,1	6,57	0,652	0,219	-180	-4	-0,27	-8,11	-9,33	-0,096	-0,027
Daily Emissions	lb/day	-193	157,7	10,59	3,55	-4 316	-87	-6,5	-194,58	-58,82	-2,30	-0,64
Annual Emissions	lb/year	-39 344	32 094	2 154	722	-878 176	-17 741	-1 331	-39 595	-11 969	-468	-131
	tpy	-19,7	16,0	1,077	0,361	-439	-9	-0,67	-19,80	-5,98	-0,23	-0,07

NOTES:
1) Emission Factors for VOC and NH_3 are from California ARB Emissions Inventory Methodology for Composting Facilities, Dated 3/2/15, Tables III-1 and III-2. 80% control factor assumed.
2) 90% of VOC Emissions assumed to occur during active phase, 10% during curing https://www.arb.ca.gov/ei/areasrc/Composting_Emissions_Inventory_Methodology_Final_Combined.pdf
3) Assume 70% of the NH_3 emissions happen in the active phase of composting and 30% of the NH_3 emissions happen in the curing phase (BAAQMD Draft Engineering Report for Waste Management of Alameda County, App. #26437). https://www.baaqmd.gov/~/media/files/engineering/public-notices/2017/26437/26437_a2066_04262017_proposed_major_modify_eval-pdf.pdf?la=fil-ph
4) Table 2-4. Default Emission Factors for Composting Greenhouse Gas Emissions Estimation Methodologies for Biogenic Emissions from Selected Source Categories: Solid Waste Disposal Wastewater Treatment Ethanol Fermentation - RTI, International, Draft Dec 2010 (https://www3.epa.gov/ttnchie1/efpac/ghg/GHG_Biogenic_Report_draft_Dec1410.pdf)
5) Compost screening and grinder operations emission factors for PM_{10} and $PM_{2.5}$ are from EPA-454/R-95-012, August 1995, 3-07-008-01 Log Debarking Operations. Assume $PM_{2.5}$ = 50% of PM_{10}. These are the values used in the BAAQMD Eng. Eval. for Altamont. Water suppression controls = 50% control.
6) Load/Unload Emission Factors for PM_{10} and $PM_{2.5}$ are calculated using methodology in EPA AP-42 Section 13.2.4 Aggregate Handling and Storage Piles.
7) CalRecycle estimates that loose yard waste weighs 600 lbs/yd^3. (https://www.calrecycle.ca.gov/swfacilities/cdi/tools/calculations). Batch size is based on CAT 950H loader specs (bucket capacity = 4 yd^3).
8) Control efficiency from https://www.arb.ca.gov/ei/areasrc/Composting%20Emissions%20Inventory%20Methodology%20Final%20Combined.pdf, Table III-3 also control efficiency from SCAQMD Board Meeting, PAR 1133.1 and PR 1133.3 Final Staff Report, p. III-4 (SCAQMD, 7/8/11). http://www.aqmd.gov/docs/default-source/Agendas/Governing-Board/2011/2011-jul8-037.pdf
9) 2% minimum moisture content expected throughout pre-composting steps - this number taken from Altamont Composting Permitting Eng. Eval. (BAAQMD), assume 0% control.
10) For moisture content during and after compost, used conservative optimal moisture from data request shows 50-55% moisture content, assume 50% emission control.
11) Stockpiling duration of 7 days, per data request provided by WPWMA.
12) Number of Load/Unload Operations pre-compost consists of: 1) Truck unloading food waste to stockpile, 2) Food waste to Grinder Transfer, 3) Food waste to compost pile.
13) Number of Load/Unload Operations during and after compost consists of: 1) Compost pile to curing pile, 2) Cured compost to screener, and 3) Screened compost to truck transfer.
14) Assume Ammonia EF value is 0.02 lbs/wet-ton-day per BAAQMD Draft Eng. Eval. for Altamont, App. #26437.
15) The compost cycle consists of 56-84 days during the active phase and 56 days during the curing phase.
16) Mean Wind Speed for Sacramento Executive Airport, 1996-2006, https://wrcc.dri.edu/Climate/comp_table_show.php?stype=wind_speed_avg.
17) CalRecycle and SJVAPCD: http://www.valleyair.org/grant_programs/TAP/documents/C-15636-ACP/C-15636_ACP_FinalReport.pdf
18) It is assumed that CO_2, CH_4, and N_2O emissions during the active and curing stages are identical to VOC distribution: 90% during active phase and 10% during curing phase.
19) Technology controls show a range between 53% and 99%+ using GAC or biofilter technology See http://www.valleyair.org/grant_programs/TAP/documents/C-15636-ACP/C-15636_ACP_FinalReport.pdf and https://ww3.arb.ca.gov/ei/areasrc/composting_emissions_inventory_methodology_final_combined.pdf.
20) From the Atmospheric Environment Journal study done by UC Davis and CalRecycle: Volatile Organic Compound Emissions from Green Waste Composting: Characterization and Ozone Formation, dated Jan 7, 2011.

VOC and NH_3 Emissions are calculated as follows:

Total Annual Emissions (lbs/yr) = (CPEF x (1-CE) x TP) + (SEF x SD x TP)
Where:
- CPEF = Composting Process Emission Factor (lbs/wet-ton)
- SEF = Stockpile Emission Factor (lbs/wet ton-day)
- SD = Average number of days material is stockpiled (days)
- CE = Control Efficiency (%)
- TP = Total annual facility throughput (wet-tons)

PM_{10} and $PM_{2.5}$ from Load/Unload Operations are calculated as follows:

$E = k \times (0.0032) \times [(U/5)^{1.3}]/[(M/2)^{1.4}]$
Where:
- E = Emission Factor (lb/ton)
- U = Mean Wind Speed, mph
- M = Moisture Content, %

WPWMA Material Recovery Facility (MRF) Operations
MRF Sorting Emissions (Net Increase 2018 to 2050)

Operating Parameters

Parameter	Units	Operation	Notes
Operational Parameter			
Hours of Operation - Recycling Operations	hours/day	14	
Operational Days per Year	days/year	365	
Recycling Materials Throughput per Day	tons/day	621	
Daily Site-Wide Peaking Factor	Peak tpd/Avg tpd	1,28	WAP Flow Chart
Recycling Materials Throughput per Year	2018 tons/year	240 067	WAP Flow Chart Net (2018)
Recycling Materials Throughput per Year	2050 tons/year	416 709	WAP Flow Chart Net (2050, inc div)
Recycling Materials Throughput per Year	NET tons/year	176 642	WAP Flow Chart Net (2050-2018)
No. of Transfer Operations per Batch	operations/batch	3	1
Weight of Recycling Materials per Batch	lbs/batch	444	2
Weight of Recycling Materials per Batch	tons/batch	0,222	
Recycling Throughput Rate	batches/day	2 796	
Recycling Throughput Rate	batches/year	795 683	

MRF EMISSION FACTORS

SOURCE DESCRIPTION	Quantity	SOURCE TYPE	Activity Code	PROCESS RATE[1] (tons/hr)	PROCESS RATE (hrs/day)	PROCESS RATE (days/yr)	PM_{10} EMISSION FACTOR[2] (lbs/ton)	$PM_{2.5}$ EMISSION FACTOR[2] (lbs/ton)	Control Type
MRF Operation									
Conveyor System / Loading / Unloading	187	Transfer point	MRF	44,34	14	365	4,60E-05	1,30E-05	Maintain moisture
Screens	17	Process screen	MRF	44,34	14	365	7,40E-04	5,00E-05	dry process screen with insertable filter

MRF EMISSIONS

SOURCE DESCRIPTION	PM_{10} EMISSIONS (lbs/hr)	$PM_{2.5}$ EMISSIONS (lbs/hr)	PM_{10} EMISSIONS (lb/day)	$PM_{2.5}$ EMISSIONS (lb/day)	PM_{10} EMISSIONS (lbs/yr)	$PM_{2.5}$ EMISSIONS (lbs/yr)
MRF Operation						
Conveyor System	0,38	0,11	5,34	1,51	429	551
Screens	0,56	0,04	7,81	0,53	2 222	193
Totals:	**0,94**	**0,145**	**13,15**	**2,04**	**2 652**	**743**

NOTES:
1) Hourly process rates are based on MRF operations.
2) AP-42 Section 11.19.2 will be used for $PM_{2.5}$ emission factors, dated Aug 2004.

WPWMA Construction and Demolition (C&D) Waste Operations
C&D Facility - Wood Chipping & Grinding Emissions (Net Increase 2018 to 2050)

Operating Parameters

Parameter	Units	Operation	Notes
Operational Parameter			
Hours of Operation - GWF Operations	hours/day	12	
Operational Days per Year	days/year	365	
Daily Site-Wide Peaking Factor	Peak tpd/Avg tpd	1,28265	WAP Flow Chart
Greenwaste/Wood Waste Throughput per Day (Net Increase)	wet tons/day	266	
Annual Greenwaste/Wood Waste Throughput (2018)	wet tons/year	19 994	2018
Annual Greenwaste/Wood Waste Throughput (2050)	wet tons/year	95 793	2050, inc div
Annual Greenwaste/Wood Waste Throughput Net Increase	wet tons/year	75 799	WAP Flow Chart Net (2050-2018)
No. of Drop/Transfer Operations per Batch	operations/batch	5	5
Weight of greenwaste per batch	lbs/batch	2 400	2
Number of tons per batch greenwaste processed	tons/batch	1,20	
Green/Wood Waste Process Rate	batches/day	222	
Green/Wood Waste Process Rate	batches/year	63 166	

GREEN/WOOD WASTE CHIPPING & GRINDING EMISSION FACTORS

SOURCE DESCRIPTION	SOURCE TYPE	PROCESS RATE	PROCESS RATE UNITS	PM_{10} Uncontrolled EF	$PM_{2.5}$ Uncontrolled EF	EMISSION FACTOR UNITS	EMISSION FACTOR TYPE	CONTROL EFFICIENCY
Conveyor / Process Line[1,2]	transfer point	18,5	batches/hr	2,31E-03	3,50E-04	lbs/batch	uncontrolled transfer	0%
Grinding & chipping / Wood Mauler[3]	processing	22,2	tons/hr	1,44E-02	7,20E-03	lbs/ton	controlled processing	50%
Stacker Conveyor[1,2]	transfer point	18,5	batches/hr	2,31E-03	3,50E-04	lbs/batch	controlled processing	0%

GREEN/WOOD WASTE CHIPPING & GRINDING PM EMISSIONS

SOURCE DESCRIPTION	PM10 EMISSIONS (lbs/hr)	PM2.5 EMISSIONS (lbs/hr)	PM10 EMISSIONS (lbs/day)	PM2.5 EMISSIONS (lbs/day)	PM10 EMISSIONS (lbs/yr)	PM2.5 EMISSIONS (lbs/yr)
Conveyor / Process Line	0,214	0,0324	2,57	0,388	730	111
Grinding & chipping / Wood Mauler	0,160	0,080	3,84	1,92	1 091	546
Stacking Conveyor	0,043	0,032	2,57	0,39	730	111
Total:	**0,416**	**0,145**	**9,0**	**2,69**	**2 551**	**767**

Grinding/Chipping Emissions

Calculated Emissions	Units	PM_{10} Value	$PM_{2.5}$ Value
Max. Hourly Emissions	lb/hour	0,203	0,112
Max. Daily Emissions	lb/day	6,40	2,31
Annual Emissions	lb/year	1 821	656
	tpy	0,91	0,33

Conveyor/Process Line Emissions

Calculated Emissions	Units	PM_{10} Value	$PM_{2.5}$ Value
Max. Hourly Emissions	lb/hour	0,214	0,0324
Max. Daily Emissions	lb/day	2,57	0,388
Annual Emissions	lb/year	730	111
	tpy	0,365	0,0553

NOTES:

1) Unload/transfer Emission Factors for PM_{10} and $PM_{2.5}$ are calculated using methodology in EPA AP-42 Section 13.2.4 Aggregate Handling and Storage Piles.

2) CalRecycle estimates that loose yard waste weighs 600 lbs/yd^3. (https://www.calrecycle.ca.gov/swfacilities/cdi/tools/calculations). Batch size is based on CAT 950H loader specs (bucket capacity = 4 yd^3).

3) Chipping/grinding emission Factors for PM_{10} are from EPA-454/R-95-012, August 1995, 3-07-008-02 Log Debarking Operations. Altamont Eng. Eval. (BAAQMD Application # 26437, Plant No. 2066) uses these emission factors - Although they were revoked by EPA in 2002, they are the most representative of greenwaste chipping and grinding operations at this landfill. Emission Factors for $PM_{2.5}$ are not provided in the EPA-454/R-95-012. Assume $PM_{2.5}$ = 50% of PM_{10} (same assumption was made for Altamont).

4)Grinding & chipping emission factors for PM_{10} and $PM_{2.5}$ are from EPA-454/R-95-012, August 1995, 3-07-008-01 Log Debarking Operations. Assume $PM_{2.5}$ = PM_{10}. These are the values used in the BAAQMD Eng. Eval. for Altamont. Water suppression controls = 50% control.

5) Number of Loading/Unloading Operations consists of: 1) Truck unloading to stockpile, 2) Greenwaste to Grinder Transfer, 3) Greenwaste to Screener Transfer, 4) Ground greenwaste to storage pile, 5) Screened greenwaste to truck and/or compost pile Transfer.

PM_{10} and $PM_{2.5}$ from Drop/Transfer Operations are calculated as follows:

$E = k \times (0.0032) \times [(U/5)^{1.3}]/[(M/2)^{1.4}]$

Where:	PM_{10} Value	$PM_{2.5}$ Value
E = Emission Factor (lb/ton)	--	--
k = Particle Size Multiplier	0,35	0,053
U - Mean Wind Speed (mph)	2,20	2,20
M = Material Moisture Content (%)	2	2

U = Mean Wind Speed for Placer County APCD in CalEEMod.

M = 2% minimum expected throughout all processing steps - this number taken from Altamont Composting Permitting Eng. Eval. (BAAQMD)

WPWMA Construction and Demolition (C&D) Waste Operations
C&D Facility - Asphalt and Concrete Crushing/Screening (Net Increase 2018 to 2050)

C&D WASTE CRUSHING PLANT EMISSION FACTORS

SOURCE DESCRIPTION	SOURCE TYPE	Activity Code	PROCESS RATE[1] (tons/hr)	PROCESS RATE (tons/day)	Peaking Factor 1,28265	PROCESS RATE (tons/yr)	PROCESS RATE (hrs/day)	PROCESS RATE (days/yr)	PM_{10} EMISSION FACTOR[2] (lbs/ton)	$PM_{2.5}$ EMISSION FACTOR[3] (lbs/ton)	EMISSION FACTOR TYPE	CONTROL EFFICIENCY
C&D Waste Crushing												
Front Loader to primary crusher	transfer point 1	CDICRUSH	1056,8	1056,8		75 799	1	92	1,10E-03	1,67E-04	water mist	50,0%
Primary crusher	process crushing	CDICRUSH	1056,8	1056,8		75 799	1	92	2,40E-03	3,63E-04	primary crushing with insertable filter	90,0%
Primary crusher to conveyor	transfer point 2	CDICRUSH	1056,8	1056,8		75 799	1	92	1,10E-03	1,67E-04	water mist	50,0%
Conveyor to secondary crusher	transfer point 3	CDICRUSH	1056,8	1056,8		75 799	1	92	1,10E-03	1,67E-04	water mist	50,0%
Secondary crusher	process crushing	CDICRUSH	1056,8	1056,8		75 799	1	92	2,40E-03	3,63E-04	Secondary crushing with insertable filter	90,0%
Secondary crusher to conveyor	transfer point 4	CDICRUSH	1056,8	1056,8		75 799	1	92	1,10E-03	1,67E-04	water mist	50,0%
Conveyor to triple deck screen	transfer point 5	CDICRUSH	1056,8	1056,8		75 799	1	92	1,10E-03	1,67E-04	water mist	50,0%
Triple deck screen	process screen	CDICRUSH	1056,8	1056,8		75 799	1	92	8,70E-03	1,32E-03	dry process screen with insertable filter	90,0%
Triple deck screen to conveyors 1 and	transfer point 6	CDICRUSH	1056,8	1056,8		75 799	1	92	1,10E-03	1,67E-04	water mist	50,0%
Conveyor 1 to rock pile	transfer point 7	CDICRUSH	1056,8	1056,8		75 799	1	92	1,10E-03	1,67E-04	water mist	50,0%
Conveyor 2 to secondary crusher	transfer point 8	CDICRUSH	1056,8	1056,8		75 799	1	92	1,10E-03	1,67E-04	water mist	50,0%
Secondary crusher	fine crushing	CDICRUSH	1056,8	1056,8		75 799	1	92	1,50E-02	2,27E-03	dry fine crushing with insertable filter	90,0%
Secondary crusher to conveyor	transfer point 9	CDICRUSH	1056,8	1056,8		75 799	1	92	1,10E-03	1,67E-04	water mist	50,0%
Conveyor to triple deck screen	transfer point 10	CDICRUSH	1056,8	1056,8		75 799	1	92	1,10E-03	1,67E-04	water mist	50,0%
Triple deck screen	fine screen	CDICRUSH	1056,8	1056,8		75 799	1	92	7,20E-02	1,09E-02	dry fine screen with insertable filter	90,0%
Triple deck screen to conveyor	transfer point 11	CDICRUSH	1056,8	1056,8		75 799	1	92	1,10E-03	1,67E-04	water mist	50,0%
Conveyor to rock pile	transfer point 12	CDICRUSH	1056,8	1056,8		75 799	1	92	1,10E-03	1,67E-04	water mist	50,0%

C&D WASTE CRUSHING PLANT EMISSIONS

SOURCE DESCRIPTION	PM_{10} EMISSIONS (lbs/hr)	$PM_{2.5}$ EMISSIONS (lbs/hr)	PM_{10} EMISSIONS (lb/day)	$PM_{2.5}$ EMISSIONS (lb/day)	PM_{10} EMISSIONS (lbs/yr)	$PM_{2.5}$ EMISSIONS (lbs/yr)
C&D Waste Crushing						
Front Loader to primary crusher	0,58	0,09	0,58	0,09	53,47	8,10
Primary crusher	0,25	0,04	0,25	0,04	23,33	3,53
Primary crusher to conveyor	0,58	0,09	0,58	0,09	53,47	8,10
Conveyor to secondary crusher	0,58	0,09	0,58	0,09	53,47	8,10
Secondary crusher	0,25	0,04	0,25	0,04	23,33	3,53
Secondary crusher to conveyor	0,58	0,09	0,58	0,09	53,47	8,10
Conveyor to triple deck screen	0,58	0,09	0,58	0,09	53,47	8,10
Triple deck screen	0,92	0,14	0,92	0,14	84,58	12,81
Triple deck screen to conveyors 1 and	0,58	0,09	0,58	0,09	53,47	8,10
Conveyor 1 to rock pile	0,58	0,09	0,58	0,09	53,47	8,10
Conveyor 2 to secondary crusher	0,58	0,09	0,58	0,09	53,47	8,10
Secondary crusher	1,59	0,24	1,59	0,24	145,84	22,08
Secondary crusher to conveyor	0,58	0,09	0,58	0,09	53,47	8,10
Conveyor to triple deck screen	0,58	0,09	0,58	0,09	53,47	8,10
Triple deck screen	7,61	1,15	7,61	1,15	700,01	106,00
Triple deck screen to conveyor	0,58	0,09	0,58	0,09	53,47	8,10
Conveyor to rock pile	0,58	0,09	0,58	0,09	53,47	8,10
Totals:	**17,60**	**2,66**	**17,60**	**2,66**	**1 619**	**245**

Emissions for Source: **CD_CRSH_1_2**

Calculated Emissions	Units	PM_{10} Value	$PM_{2.5}$ Value
Hourly Emissions	lb/hour	17,01	2,576
Daily Emissions	lb/day	17,01	2,576
Annual Emissions	lb/year	1 565	237,0

Emissions for Source: **CD_ROCKPILE**

Calculated Emissions	Units	PM_{10} Value	$PM_{2.5}$ Value
Hourly Emissions	lb/hour	0,581	0,0880
Daily Emissions	lb/day	0,581	0,0880
Annual Emissions	lb/year	53,5	8,10

NOTES:
1) Hourly process rates are based on similar landfill C&D waste crushing operations.
2) Emission Factors for PM_{10} are uncontrolled factors from AP-42, Section 11.19.2 for Crushed Stone, Table 11.19.2-2.
3) AP-42 Section 11.19.2 will be used for $PM_{2.5}$ emission factors, dated Aug 2004. $PM_{2.5}$ EF = PM_{10} EF x 0.053/0.35, where 0.053/0.35 is the ratio of particle size multipliers from Section 13.2.4 of AP-42.

	PM_{10}	$PM_{2.5}$
Particle Size Multiplier, k	0,35	0,053

Operations:
1) Primary/jaw rock crushing will take place on the landfill face and will crush excavated rock to a size suitable for further processing and screening. Equipment = Jaw crusher and conveyor.
2) Typically, these materials will be stored somewhere in the landfill where disposal operations will not occur within 180 days, and processed periodically for use as road base for internal roads.
3) This is for C&D concrete/asphalt recycling crushing for road base materials.

AERMOD Source	Pollutants	Operation Hours (hrs/day)	Operation Hours (days/yr)
CD_CRSH_1_2	PM_{10}, $PM_{2.5}$	1	92
CD_ROCKPILE	PM_{10}, $PM_{2.5}$	1	92

Jacobs

WPWMA Landfill Material Movement Operations
Fugitive Dust Emissions (Net Increase 2018 to 2050)

Cover Soil Dumping/Loading

Emission Factor calculated as follows, per *EFs for unloading based on Batch Drop (lb/ton) in AP-42 13.2.4* :

Emission Factor (lb/ton) = k x 0.0032 x $[U (mph) / 5]^{1.3}$ / $[M (\%) / 2]^{1.4}$

Pollutant	k (Particle Size Multiplier) [a]	U (Mean Wind Speed, mph) [a]	M (Material Moisture Content) [a]	Emission Factor (lb/ton)	Soil Density (ton/cy) [b]	Emission Factor (lb/cy)	Net Increase (2050-2018) Landfill Cover Soil Volume (cy) [c]	Peaking Factor	Daily Emissions (lbs/day) [d]	Total Emissions (tons/yr)
Cover Soil Dumping/Loading PM_{10}	0,35	4,92	12	8,93E-05	1,05	9,40E-05	73 076	1,28265	3,38E-02	3,43E-03
Cover Soil Dumping/Loading $PM_{2.5}$	0,053	4,92	12	1,35E-05	1,05	1,42E-05	73 076	1,28265	5,11E-03	5,20E-04

Notes:

[a] Particle Size Multiplier (k), and Material Moisture Content (M) taken from Section 4.3 of Appendix A of the *CalEEMod User's Guide and AP-42, Table 13.2.4-1* . Mean Wind Speed (U) taken as the CalEEMod default for Placer County APCD region. Value converted from units of m/s to mph.

[b] Soil density from CA Integrated Waste Management Board, from https://dpw.lacounty.gov/epd/CD/cd_attachments/Volume_to_Weight.pdf

[c] Clean soil used as landfill cover in 2018: 83,041. Increase in 2050 is 83,041 x 1.88. (Net value in 2050-2018).

[d] Active waste placement occurs 261 days per year.

Spreading Equipment Passes

Emission Factor calculated as follows, per AP-42 Table 11.9-1, for grading operations:

PM_{10} Emission Factor (lb/VMT) = 0.051 x $[S (mph)]^{2.0}$ x F_{PM10}

$PM_{2.5}$ Emission Factor (lb/VMT) = 0.04 x $[S (mph)]^{2.5}$ x $F_{PM2.5}$

Vehicle Miles Traveled (VMT) calculated as follows, per Section 4.3 of Appendix A of the *CalEEMod User's Guide* :

VMT (mile) = As (acre) / Wb (ft) x 43,560 (ft^2/acre) / 5,280 (ft/mile)

Pollutant	S (Mean Vehicle Speed, mph) [a]	F (Scaling Factor) [a]	Emission Factor (lb/VMT)	Working Face Area (acres/day) [b]	Wb (Blade Width of Grading Equipment, ft) [a]	Total Vehicle Miles Traveled (VMT)	Peaking Factor	Days per Year	Daily Emissions (lbs/day)	Total Emissions (tons/yr)
MSW Spreading PM_{10}	7,1	0,6	1,543	0,5	12	0,3	1,28	261	0,680	0,069
MSW Spreading $PM_{2.5}$	7,1	0,031	0,167	0,5	12	0,3	1,28	261	0,073	0,007

Notes:

[a] Mean Vehicle Speed (S), Scaling Factor (F), and Blade Width (Wb) taken from Section 4.3 of Appendix A of the *CalEEMod User's Guide* .

[b] Acreage of the Site (As) is the landfill exposed surface area (acres/day)

Bulldozing and Compactor Equipment Passes

Emission Factor calculated as follows, per AP-42 Section 11.9:

PM_{10} Emission Factor (lb/hr) = $\{[C \times s (\%)^{1.5}] / [M (\%)^{1.4}]\}$ x F_{PM10}

$PM_{2.5}$ Emission Factor (lb/hr) = $\{[C \times s (\%)^{1.2})] / [M (\%)^{1.3}]\}$ x $F_{PM2.5}$

Pollutant	C (AP-42 Coefficient) [a]	M (Material Moisture Content, %) [a]	s (Material Silt Content, %) [a]	F (Scaling Factor) [a]	Emission Factor (lb/hr)	Operation Per Day (hr/day)	Equipment Operating Daily	Peaking Factor	Days per Year	Daily Emissions (lbs/day)	Total Emissions (tons/yr)
Bulldozing PM_{10}	1,0	12,0	6,9	0,75	0,419	10	2	1,28	261	10,755	1,094
Bulldozing $PM_{2.5}$	5,7	12,0	6,9	0,105	0,240	10	2	1,28	261	6,164	0,627
Compacting PM_{10}	1,0	12,0	6,9	0,75	0,419	10	2	1,28	261	10,755	1,094
Compacting $PM_{2.5}$	5,7	12,0	6,9	0,105	0,240	10	2	1,28	261	6,164	0,627

Notes:

[a] Coefficient used by AP-42 (C), Material Moisture Content (M), Material Silt Content (s), and Scaling Factor (F) taken from AP-42 Section 11.9 and Section 13.2.4.

[b] MSW Compacting emissions are assumed to be similar to bulldozing.

Waste Placement Excavation

Source: SCAQMD CEQA Air Quality Handbook, November 1993. Table 9-9, assumed soil density of 1.8 ton/yd3.

PM_{10} Emission Factor lb/ft3/day) = 0.00042

$PM_{2.5}$ Emission Factor (lb/ft3/day) = 0.000087

Pollutant	Max Activity [a] (cu/day)	PM10 EF (lb/ft3/day)	PM2.5 EF [b] (lb/ft3/day)	Peaking Factor	Daily Emissions (lbs/day)	Total Emissions (tons/yr)
Excavation PM_{10}	12 000	0,00042		1,28265	6,465	0,658
Excavation $PM_{2.5}$	12 000	-	0,000087	1,28265	1,345	0,137

Notes:

[a] Max activity based on material excavation per day.

[b] Source: SCAQMD Particulate Matter (PM) 2.5 Significance Thresholds and Calculation Methodology, October 2006. For construction fugitive dust sources, it is assumed that 20.8% of the PM10 would be PM2.5.

WPWMA Wind Erosion of Exposed Surfaces for Operational (Net Increase 2018 to 2050)

Parameter	Units	PM_{10} Value	$PM_{2.5}$ Value	$PM_{2.5}/PM_{10}$ Ratio
Emission Factor, Exposed Areas	lb/acre	0,0316	0,0047	0,15
Hours of Operation	hours/day	24		
Operational Days per Year	days/year	365		
Silt Content of Soils (G)	%	7,5%	(AP-42, Table 13.2.4-1)	
Number of Days with at least 0.01 inches of precip. (H)	days	74	CalEEMod default for Placer Co	
Percentage of time wind speeds exceed 12 mph (I)	%	9	Roseville weather station (wunderground.com)	
Fraction of Total Suspended Particulates (J)	PM_{10}/TSP	0,5	SCAQMD Recommendation	
Disturbed Area - Working Face	acres/day	0,5		
Landfill Exposed Surface Area	acres/day	41	Defined in Data Request 2018 Operations Spreadsheet, Landfill Tab	
Disturbed Area - Clean Soil Stockpile	acres/day	0,1		
Exposed Surface Area - Clean Soil Stockpile	acres/day	13		

Calculated Emissions - Working Face	Units	PM_{10} Value	$PM_{2.5}$ Value
Hourly Emissions	lb/hour	0,001	0,0001
Daily Emissions	lb/day	0,016	0,002
Annual Emissions	lb/year	5,76	0,86

Calculated Emissions - Landfill Exposed SA	Units	PM_{10} Value	$PM_{2.5}$ Value
Hourly Emissions	lb/hour	0,05	0,01
Daily Emissions	lb/day	1,29	0,19
Annual Emissions	lb/year	472,54	70,88

Calculated Emissions - Clean Soil Pile Disturbed	Units	PM_{10} Value	$PM_{2.5}$ Value
Hourly Emissions	lb/hour	0,0001	0,00002
Daily Emissions	lb/day	0,003	0,0005
Annual Emissions	lb/year	1,15	0,17

Calculated Emissions - Clean Soil Pile Exposed	Units	PM_{10} Value	$PM_{2.5}$ Value
Hourly Emissions	lb/hour	0,02	0,003
Daily Emissions	lb/day	0,41	0,06
Annual Emissions	lb/year	149,83	22,47

Method: CEQA Air Quality Handbook, SCAQMD 1993

Equation: $E_5 = (1.7)(G/1.5)([365-H]/235)(I/15)(J)(SA)$ [lb/yr]

Variables:
G = silt content of soils
H = number of days with at least 0.01 inches of precipitation
I = percentage of time wind speeds exceed 12 mph
J = fraction of total suspended particulates
SA = exposed surface area (acres)

Values:

G =	7,5	(AP-42, Table 13.2.4-1)
H =	62	Roseville weather station (wunderground.com)
I =	9	Roseville weather station (wunderground.com)
J =	0,5	(SCAQMD recommendation)
SA =	*see above	Data Request from WPWMA

In "Background Document for Revisions to Fine Fraction Ratios Used for AP-42 Fugitive Dust Emission Factors" Nov 2006, Table 1 also states for open area wind erosion, a proposed PM2.5/PM10 ratio is 0.15

Jacobs

WPWMA Landfill Emergency Generators (Future Addition)

Engine Characteristics:

Equipment	Scalehouse E-Gen
Quantity	3
Fuel:	Gasoline
Fuel Heating Value (btu/gal):	124 000
Max Rated Horsepower (bhp):	15
Max Fuel Consumption @ 100% Load (gal/hr):	5,0
Heat Input (MMBtu/hr):	0,62
Annual Hours (hr/yr)	40,00
Control Device:	None

Criteria Pollutant and GHG Emission Factors:

Pollutant	Gasoline Emission Factor	Units
NO_x[a]	0,011	lb/hp-hr
CO[a]	0,007	lb/hp-hr
VOC[a]	0,015	lb/hp-hr
SO_2[a]	0,002	lb/hp-hr
PM_{10}[a]	0,002	lb/hp-hr
$PM_{2.5}$[a]	0,002	lb/hp-hr
CO_2[c]	154,809	lbs/MMBtu
CH_4[c]	6,60E-03	lbs/MMBtu
N_2O[c]	1,32E-03	lbs/MMBtu

Jacobs

WPWMA Landfill Emergency Generators (Future Addition)

Criteria and GHG Pollutant Emission Rates:

Pollutant	Each E-Gen Emissions		Total E-Gen	
	(lbs/hr)	(tons/yr)	(lbs/hr)	(tons/yr)
NO_x	0,17	0,00	0,50	0,01
CO	0,10	0,00	0,31	0,01
VOC	0,23	0,00	0,68	0,01
SO_2	0,03	0,00	0,09	0,00
PM_{10}	0,03	0,00	0,10	0,00
$PM_{2.5}$	0,03	0,00	0,10	0,00
CO_2	2322,13	46,44	287,94	5,76
CH_4	0,10	0,00	1,23E-02	0,00
N_2O	0,02	0,00	2,46E-03	0,00

Hazardous Air Pollutant (HAP) Potential Emissions:

Pollutant[b]	Emission Factor (lb/MMBtu)	Each E-Gen Emissions		Total E-Gen	
		(lbs/hr)	(tpy)	(lbs/hr)	(tons/yr)
Acetaldehyde	7,67E-04	4,76E-04	2,85E-05	1,43E-03	2,85E-05
Acrolein	9,25E-05	5,74E-05	3,44E-06	1,72E-04	3,44E-06
Benzene	9,33E-04	5,78E-04	3,47E-05	1,74E-03	3,47E-05
Formaldehyde	1,18E-03	7,32E-04	4,39E-05	2,19E-03	4,39E-05
Toluene	4,09E-04	2,54E-04	1,52E-05	7,61E-04	1,52E-05
Xylene	2,85E-04	1,77E-04	1,06E-05	5,30E-04	1,06E-05
PAH	1,68E-04	1,04E-04	6,25E-06	3,12E-04	6,25E-06
TOTAL HAPs		**2,38E-03**	**1,43E-04**	**7,13E-03**	**1,43E-04**

[a] Emission factors from AP-42 Section 3.3, "Gasoline and Diesel Industrial Engines", October 1996

[b] Emission factors from AP-42 Section 3.3, "Gasoline and Diesel Industrial Engines", October 1996

[c] Emission factors from Tables C-1 and C-2, 40 CFR Part 98, Subpart C.

WPWMA Landfill Gas-to-Energy (LFGTE) Plant
LFGTE - Electricity Generators (Net Increase 2018 to 2050)

Stationary Sources

Equipment Type	Equipment Description	Number (ea)	Fuel Type	Annual Throughput (scf)[1]	Emission Controls
2018 LFGTE Plant[1]	Caterpillar 3516 LFG Electricity Generators	4	LFG	589 865 298	Woodward EGS-3 electronic engine controls
2050 LFGTE Plant[2]	Caterpillar 3516 LFG Electricity Generators	6	LFG	880 464 937	Woodward EGS-3 electronic engine controls

[1] Source: 2018 Title V Emission Statement and 2018 Methane Emissions Annual Report
[2] LFGTE Plant likely operate an average of 4.5 of 6 engines in 2018, with ~25% available capacity.

Source ID:	**E1, E2, E3, E4, E5, and E6**		
Fuel Type:	LFG		
Engine Make/Model	Caterpillar Model G3516		
Engine Rating:	808	ekW	spec sheet
Brake Horsepower Rating:	1 148	bhp	spec sheet
Fuel Consumption:	7 296	BTU/bhp-hr	spec sheet
Fuel Consumption:	16 752	scf/hr	
Heat Rating [1]:	8 375 808	Btu/hr	
Daily Hours of Operation:	24	hours	
Annual Hours of Operation:	8 760	hours	

HOURLY, DAILY, AND ANNUAL CRITERIA EMISSIONS

Criteria Pollutant	Emission Factor [2]	Engine Specific Emission Factor [3]	Single Engine Emissions			Total Criteria Emissions (2050 Net 2 Additional Engines)		
			Hourly [4a, 4b]	Daily	Annual	Hourly	Daily	Annual
	(lb/MMBtu)	(g/bhp-hr)	(lbs/hour)	(lbs/day)	(tons/year)	(lbs/hour)	(lbs/day)	(tons/year)
NO_x	--	0,60	1,52	36,44	6,65	3,04	72,89	13,30
CO	--	2,50	6,33	151,85	27,71	12,65	303,70	55,43
VOC (TNMHC)	--	1,35	3,42	82,00	14,97	6,83	164,00	29,93
PM_{10} [5]	7,71E-05	---	0,00	0,02	0,00	0,00	0,03	0,01
$PM_{2.5}$ [5]	7,71E-05	---	0,00	0,02	0,00	0,00	0,03	0,01
SOx [5]	5,88E-04	---	0,00	0,12	0,02	0,01	0,24	0,04
CO_2 [2]	1,15E+02	---	961,50	23 075,93	4 211,36	1922,99	46151,87	8422,72
CH_4 [2]	7,05E-03	---	0,06	1,42	0,26	0,12	2,84	0,52
N_2O [2]	1,39E-03	---	0,01	0,28	0,05	0,02	0,56	0,10

Notes
1. Heat Rating (Btu/hr) = Fuel Consumption (scf/hr) x Higher Heating Value (Btu/scf)
Average LFG higher heating value of: 500 Btu/scf.
2. Emission Factor Source: EPA Emission Factors for GHG Inventories, modified March 9, 2018 (https://www.epa.gov/sites/production/files/2018-03/documents/emission-factors_mar_2018_0.pdf)
3. Engine specific emission factors are based on Permit Limits
4a. Hourly Emissions (lb/hr) = Emission Factor (lb/MMBtu) x Btu Rating (MMBtu/hr)
4b. Hourly Emissions (lb/hr) = Emission Factor (g/bhp-hr) x BHP Rating (bhp)
5. AP-42 Table 3.2-2 for SOx, PM10

Stationary Sources

Equipment Type	Equipment Description	Number (ea)	Fuel Type	Annual Throughput (scf)[1]	Emission Controls
2018 LFGTE Plant[1]	Caterpillar 3516 LFG Electricity Generators	4	LFG	589 865 298	Woodward EGS-3 electronic engine controls
2050 LFGTE Plant[2]	Caterpillar 3516 LFG Electricity Generators	6	LFG	880 464 937	Woodward EGS-3 electronic engine controls

[1] Source: 2018 Title V Emission Statement and 2018 Methane Emissions Annual Report
[2] LFGTE Plant likely operate an average of 4.5 of 6 engines in 2018, with ~25% available capacity.

HOURLY, DAILY, AND ANNUAL HAP EMISSIONS

Hazardous Air Pollutant	CAS Number	Molecular Weight (lb/lbmol)	Conc. In LFG (ppmv)	Emission Factor [2]	Compound Specific Engine Destruction Efficiency	Single Engine Emissions			Total TAC/HAP Emissions (Net 2 Additional Engines)			
						Hourly	Daily	Annual	Hourly	Daily	Annual	Annual
			(1)	(lb/MMscf)	(%)	(lb/hr)	(lbs/day)	(lbs/year)	(lb/hr)	(lbs/day)	(lbs/year)	(tons/year)
1,1,1-Trichloroethane (Methyl Chloroform)	71-55-6	133,42	0,1680	0,05907	97,2%	2,77E-05	6,65E-04	2,43E-01	5,54E-05	1,33E-03	4,85E-01	2,43E-04
1,1,2,2-Tetrachloroethane	79-34-5	167,85	0,0700	0,03096	97,2%	1,45E-05	3,49E-04	1,27E-01	2,90E-05	6,97E-04	2,54E-01	1,27E-04
1,1-Dichloroethane	75-34-3	98,96	0,7410	0,19323	97,2%	9,06E-05	2,18E-03	7,94E-01	1,81E-04	4,35E-03	1,59E+00	7,94E-04
1,1-Dichloroethene	75-35-4	96,94	0,0920	0,02350	97,2%	1,10E-05	2,65E-04	9,66E-02	2,20E-05	5,29E-04	1,93E-01	9,66E-05
1,2-Dichloroethane (Ethylene Dichloride)	107-06-2	98,96	0,1200	0,03129	97,2%	1,47E-05	3,52E-04	1,29E-01	2,94E-05	7,05E-04	2,57E-01	1,29E-04
1,2-Dichloropropane (Propylene Dichloride)	78-87-5	112,98	0,0230	0,00685	97,2%	3,21E-06	7,71E-05	2,81E-02	6,42E-06	1,54E-04	5,63E-02	2,81E-05
Acrylonitrile	107-13-1	53,06	0,0360	0,00503	97,2%	2,36E-06	5,67E-05	2,07E-02	4,72E-06	1,13E-04	4,14E-02	2,07E-05
Benzene	71-43-2	78,11	0,9720	0,20007	97,2%	9,38E-05	2,25E-03	8,22E-01	1,88E-04	4,50E-03	1,64E+00	8,22E-04
Carbon Disulfide	75-15-0	76,13	0,3200	0,06420	97,2%	3,01E-05	7,23E-04	2,64E-01	6,02E-05	1,45E-03	5,28E-01	2,64E-04
Carbon Tetrachloride	56-23-5	153,84	0,0070	0,00284	97,2%	1,33E-06	3,19E-05	1,17E-02	2,66E-06	6,39E-05	2,33E-02	1,17E-05
Carbonyl Sulfide	75-15-0	76,13	0,1830	0,03671	97,2%	1,72E-05	4,13E-04	1,51E-01	3,44E-05	8,27E-04	3,02E-01	1,51E-04
Chlorobenzene	108-90-7	112,56	0,2270	0,06733	97,2%	3,16E-05	7,58E-04	2,77E-01	6,32E-05	1,52E-03	5,53E-01	2,77E-04
Chloroethane (Ethyl Chloride)	75-00-3	64,52	0,2390	0,04063	97,2%	1,91E-05	4,57E-04	1,67E-01	3,81E-05	9,15E-04	3,34E-01	1,67E-04
Chloroform	67-66-3	119,39	0,0210	0,00661	97,2%	3,10E-06	7,44E-05	2,71E-02	6,20E-06	1,49E-04	5,43E-02	2,71E-05
Dichloromethane (Methylene Chloride)	75-09-2	84,94	3,3950	0,75990	97,2%	3,56E-04	8,55E-03	3,12E+00	7,13E-04	1,71E-02	6,24E+00	3,12E-03
Ethylbenzene	100-41-4	106,16	6,7890	1,89921	97,2%	8,91E-04	2,14E-02	7,80E+00	1,78E-03	4,28E-02	1,56E+01	7,80E-03
Hexane	110-54-3	86,17	2,3240	0,52771	97,2%	2,48E-04	5,94E-03	2,17E+00	4,95E-04	1,19E-02	4,34E+00	2,17E-03
Mercury (Total)*	7439-97-6	200,61	0,0003	0,00015	0,0%	2,59E-06	6,21E-05	2,27E-02	5,17E-06	1,24E-04	4,53E-02	2,27E-05
Methyl Ethyl Ketone	78-93-3	72,11	10,5570	2,00605	97,2%	9,41E-04	2,26E-02	8,24E+00	1,88E-03	4,52E-02	1,65E+01	8,24E-03
Methyl Isobutyl Ketone	108-10-1	100,16	0,7500	0,19795	97,2%	9,28E-05	2,23E-03	8,13E-01	1,86E-04	4,46E-03	1,63E+00	8,13E-04
Perchloroethylene (Tetrachloroethylene)	127-18-4	165,83	1,1930	0,52133	97,2%	2,45E-04	5,87E-03	2,14E+00	4,89E-04	1,17E-02	4,28E+00	2,14E-03
Toluene	108-88-3	92,13	25,4050	6,16774	97,2%	2,89E-03	6,94E-02	2,53E+01	5,79E-03	1,39E-01	5,07E+01	2,53E-02
Trichloroethylene (Trichloroethene)	79-01-6	131,38	0,6810	0,23577	97,2%	1,11E-04	2,65E-03	9,69E-01	2,21E-04	5,31E-03	1,94E+00	9,69E-04
Vinyl Chloride	75-01-4	62,50	1,0770	0,17738	97,2%	8,32E-05	2,00E-03	7,29E-01	1,66E-04	3,99E-03	1,46E+00	7,29E-04
Xylenes	1330-20-7	106,16	16,5820	4,63877	97,2%	2,18E-03	5,22E-02	1,91E+01	4,35E-03	1,04E-01	3,81E+01	1,91E-02
Hydrochloric Acid (HCl)**	7647-01-0	36,46	74,0000	7,10974	0,0%	1,19E-01	2,86E+00	1,04E+03	2,38E-01	5,72E+00	2,09E+03	1,04E+00
TOTAL EMISSIONS:						**0,13**	**3,06**	**1116,88**	**0,25**	**6,12**	**2233,77**	**1,12**

Note:
1. Average concentration of compounds found in LFG based on "Waste Industry Air Coalition Comparison of Recent Landfill Gas Analyses with Historic AP-42 Values." *Mercury concentration is based on the Revised EPA AP-42 Section 2.4 Table 2.41 (11/98). **HCl default value based on chlorinated compounds in LFG, forming HCl when combusted in control equipment, default 0f 74 ppmv for landfills with majority of waste after 1992.

2. Emission Conversion from ppmv to lb/MMscf example:
EF (lb/MMscf) = ppmv x lb/lbmol x 1 scf / 0.7302 scf-atm/lbmol-^{o}R/519.7 ^{o}R

Jacobs

Summary of LFG Generation Results for LandGEM Model Runs
WPWMA

Year	LFG Baseline (1979-2050) (cf/yr)	No Future Diversion			PC1&PC2	Plan Concept 1				Plan Concept 2		
		LFG (1979-2018) (cf/yr)	LFG (2019-2050) (cf/yr)	Total LFG (1979-2050) (cf/yr)	LFG (1979-2018) (cf/yr)	LFG (2019-2025) (cf/yr)	LFG (2026-2030) (cf/yr)	LFG (2031-2050) (cf/yr)	Total LFG (1979-2050) (cf/yr)	LFG (2019-2028) (cf/yr)	LFG (2029-2050) (cf/yr)	Total LFG (1979-2050) (cf/yr)
k	0,0325	0,0325	0,0325	0,0325	0,0325	0,0325	0,027	0,024	varies	0,0325	0,024	varies
Lo	115	115	100	varies	115	100	80	65	varies	100	65	varies
1979	0,0	0,0		0,0	0,0				0,0			0,0
1980	418854,9	418854,9		418854,9	418854,9				418854,9			418854,9
1981	9824612,4	9824612,4		9824612,4	9824612,4				9824612,4			9824612,4
1982	19207020,1	19207020,1		19207020,1	19207020,1				19207020,1			19207020,1
1983	28745861,1	28745861,1		28745861,1	28745861,1				28745861,1			28745861,1
1984	45005840,9	45005840,9		45005840,9	45005840,9				45005840,9			45005840,9
1985	69529285,4	69529285,4		69529285,4	69529285,4				69529285,4			69529285,4
1986	97552865,2	97552865,2		97552865,2	97552865,2				97552865,2			97552865,2
1987	128915934,1	128915934,1		128915934,1	128915934,1				128915934,1			128915934,1
1988	161392122,3	161392122,3		161392122,3	161392122,3				161392122,3			161392122,3
1989	204787389,0	204787389,0		204787389,0	204787389,0				204787389,0			204787389,0
1990	242591295,4	242591295,4		242591295,4	242591295,4				242591295,4			242591295,4
1991	279071619,2	279071619,2		279071619,2	279071619,2				279071619,2			279071619,2
1992	313551702,5	313551702,5		313551702,5	313551702,5				313551702,5			313551702,5
1993	347270477,6	347270477,6		347270477,6	347270477,6				347270477,6			347270477,6
1994	380716553,7	380716553,7		380716553,7	380716553,7				380716553,7			380716553,7
1995	409760950,8	409760950,8		409760950,8	409760950,8				409760950,8			409760950,8
1996	439699579,7	439699579,7		439699579,7	439699579,7				439699579,7			439699579,7
1997	468603270,2	468603270,2		468603270,2	468603270,2				468603270,2			468603270,2
1998	495495702,5	495495702,5		495495702,5	495495702,5				495495702,5			495495702,5
1999	526849838,1	526849838,1		526849838,1	526849838,1				526849838,1			526849838,1
2000	562566283,5	562566283,5		562566283,5	562566283,5				562566283,5			562566283,5
2001	605719917,3	605719917,3		605719917,3	605719917,3				605719917,3			605719917,3
2002	651220017,4	651220017,4		651220017,4	651220017,4				651220017,4			651220017,4
2003	699656135,6	699656135,6		699656135,6	699656135,6				699656135,6			699656135,6
2004	736516409,5	736516409,5		736516409,5	736516409,5				736516409,5			736516409,5
2005	773992128,8	773992128,8		773992128,8	773992128,8				773992128,8			773992128,8
2006	812937745,1	812937745,1		812937745,1	812937745,1				812937745,1			812937745,1
2007	853887826,8	853887826,8		853887826,8	853887826,8				853887826,8			853887826,8
2008	886281123,0	886281123,0		886281123,0	886281123,0				886281123,0			886281123,0
2009	912037351,7	912037351,7		912037351,7	912037351,7				912037351,7			912037351,7
2010	932655587,7	932655587,7		932655587,7	932655587,7				932655587,7			932655587,7
2011	952087564,2	952087564,2		952087564,2	952087564,2				952087564,2			952087564,2
2012	969239502,2	969239502,2		969239502,2	969239502,2				969239502,2			969239502,2
2013	986124691,2	986124691,2		986124691,2	986124691,2				986124691,2			986124691,2
2014	1005676432,1	1005676432,1		1005676432,1	1005676432,1				1005676432,1			1005676432,1
2015	1025998469,4	1025998469,4		1025998469,4	1025998469,4				1025998469,4			1025998469,4
2016	1049537698,7	1049537698,7		1049537698,7	1049537698,7				1049537698,7			1049537698,7
2017	1077033114,6	1077033114,6		1077033114,6	1077033114,6				1077033114,6			1077033114,6
2018	1109638447,2	1109638447,2	0,0	1109638447,2	1109638447,2	0,0			1109638447,2	0,0		1109638447,2
2019	1143906419,0	1143906419,0	60653470,4	1204559889,4	1143906419,0	60653470,4			1204559889,4	60653470,4		1204559889,4
2020	1177078585,0	1107327094,1	120580460,8	1227907554,9	1107327094,1	120580460,8			1227907554,9	120580460,8		1227907554,9
2021	1209189986,5	1071917486,4	179828463,7	1251745950,0	1071917486,4	179828463,7			1251745950,0	179828463,7		1251745950,0
2022	1240274544,0	1037640191,2	238443937,9	1276084129,1	1037640191,2	238443937,9			1276084129,1	238443937,9		1276084129,1
2023	1270365093,5	1004458999,9	296472351,9	1300931351,8	1004458999,9	296472351,9			1300931351,8	296472351,9		1300931351,8
2024	1299493420,9	972338861,9	353958224,7	1326297086,6	972338861,9	353958224,7			1326297086,6	353958224,7		1326297086,6
2025	1327690295,8	941245847,1	410945166,8	1352191013,9	941245847,1	410945166,8	0,0		1352191013,9	410945166,8		1352191013,9
2026	1354985503,7	911147110,8	467475919,2	1378623030,1	911147110,8	467475919,2	46419051,7		1425042081,7	467475919,2		1378623030,1
2027	1381407877,7	882010858,4	523592392,1	1405603250,5	882010858,4	452527184,6	89002073,3		1423540116,3	523592392,1		1405603250,5
2028	1406985329,0	853806311,9	579335701,9	1433142013,8	853806311,9	438056473,8	131327127,5		1423189913,3	579335701,9	0,0	1433142013,8
2029	1431744876,0	826503677,7	634746207,4	1461249885,1	826503677,7	424048500,9	173418614,0		1423970792,7	627015548,4	31899834,1	1485419060,2
2030	1455712673,3	800074114,9	689863545,5	1489937660,4	800074114,9	410488468,7	215300633,1	0,0	1425863216,8	606965127,2	60973692,8	1468012934,9
2031	1478914039,2	774489704,8	744726665,5	1519216370,2	774489704,8	397362053,1	256997000,7	34302295,1	1463151053,7	587555869,4	89954692,3	1452000266,5
2032	1501373482,3	749723421,4	799373862,6	1549097284,0	749723421,4	384655388,1	250150919,7	64524326,8	1449054056,1	568767272,1	118856967,0	1437347660,5
2033	1523114727,4	725749103,1	853842810,9	1579591914,0	725749103,1	372355051,2	243487209,8	94650374,3	1436241738,3	550579488,2	147694554,5	1424023145,7
2034	1544160740,7	702541424,7	908170595,0	1610712019,7	702541424,7	360448048,8	237001012,8	124695127,9	1424685614,2	532973304,9	176481403,0	1411996132,6
2035	1564533754,1	680075871,1	962393741,3	1642469612,4	680075871,1	348921803,3	230687600,1	154673177,8	1414358452,2	515930124,4	205231378,2	1401237373,6
2036	1584255288,5	658328710,8	1016548248,7	1674876959,4	658328710,8	337764138,8	224542368,8	184599021,7	1405234240,1	499431942,9	233958270,2	1391718923,9
2037	1603346176,4	637276971,4	1070669617,5	1707946588,9	637276971,4	326963269,1	218560838,9	214487071,7	1397288151,0	483461332,9	262675800,6	1383414104,9
2038	1621826584,6	616898415,1	1124792879,4	1741691294,5	616898415,1	316507784,8	212738649,5	244351661,4	1390496510,7	468001423,9	291397628,8	1376297467,8
2039	1639716034,6	597171515,0	1178952625,1	1776124140,1	597171515,0	306386641,2	207071556,0	274207053,5	1384836765,8	453035884,9	320137359,3	1370344759,2
2040	1657033423,8	578075433,0	1233183032,1	1811258465,1	578075433,0	296589147,0	201555426,8	304067446,6	1380287453,4	438548907,1	348908547,7	1365532887,8
2041	1673797045,3	559589996,8	1287517892,0	1847107888,8	559589996,8	287104952,7	196186240,5	333946982,1	1376828172,0	424525187,5	377724708,3	1361839892,5
2042	1690024607,2	541695679,6	1341990636,8	1883686316,4	541695679,6	277924039,7	190960082,6	363859751,1	1374439553,0	410949912,0	406599319,6	1359244911,2
2043	1705733251,5	524373578,8	1396634365,0	1921007943,8	524373578,8	269036709,7	185873143,1	393819801,7	1373103233,4	397808740,5	435545831,7	1357728151,1
2044	1720939571,8	507605396,4	1451481866,6	1959087263,1	507605396,4	260433574,9	180921713,3	423841145,6	1372801830,2	385087791,6	464577672,4	1357270860,4
2045	1735659631,3	491373419,4	1506565648,5	1997939067,9	491373419,4	252105547,2	176102183,5	453937764,6	1373518914,6	372773627,4	493708253,5	1357855300,3
2046	1749908979,3	475660501,2	1561917958,2	2037578459,5	475660501,2	244043829,4	171411040,0	484123617,8	1375238988,4	360853240,0	522950977,9	1359464719,1
2047	1763702668,1	460450043,7	1617570808,5	2078020852,2	460450043,7	236239905,6	166844862,7	514412648,3	1377947460,2	349314037,5	552319245,1	1362083326,2
2048	1777055268,5	445725979,3	1673556000,2	2119281979,5	445725979,3	228685532,1	162400322,7	544818789,5	1381630623,6	338143830,3	581826458,2	1365696267,8
2049	1789980885,4	431472754,4	1729905145,4	2161377899,9	431472754,4	221372729,1	158074179,7	575355972,0	1386275635,2	327330819,0	611486030,2	1370289603,6
2050	1802493172,8	417675312,8	1786649690,4	2204325003,2	417675312,8	214293771,5	153863279,8	606038130,4	1391870494,5	316863581,3	641311389,9	1375850284,0

Note: This table provides a summary of the LandGem model results, which were initailly set up to provide a conservative estimate of landfill gas generation.
This analysis is noted to include an overlap in waste placement throughput, when waste diversion rates are adjusted.
Therfore, this analysis data will be used for a conservative estimate of criteria pollutant and toxic emissions.

Jacobs

Summary of LFG Generation Results for LandGEM Model Runs
WPWMA

Year	LFG Baseline (1979-2050) (cf/yr)	No Future Diversion			PC1&PC2	Plan Concept 1				Plan Concept 2		
		LFG (1979-2018) (cf/yr)	LFG (2019-2050) (cf/yr)	Total LFG (1979-2050) (cf/yr)	LFG (1979-2018) (cf/yr)	LFG (2019-2025) (cf/yr)	LFG (2026-2030) (cf/yr)	LFG (2031-2050) (cf/yr)	Total LFG (1979-2050) (cf/yr)	LFG (2019-2028) (cf/yr)	LFG (2029-2050) (cf/yr)	Total LFG (1979-2050) (cf/yr)
k	0,0325	0,0325	0,0325	0,0325	0,0325	0,0325	0,027	0,024	varies	0,0325	0,024	varies
Lo	115	115	100	varies	115	100	80	65	varies	100	65	varies
1979	0,0	0,0		0,0	0,0				0,0			0,0
1980	418854,9	418854,9		418854,9	418854,9				418854,9			418854,9
1981	9824612,4	9824612,4		9824612,4	9824612,4				9824612,4			9824612,4
1982	19207020,1	19207020,1		19207020,1	19207020,1				19207020,1			19207020,1
1983	28745861,1	28745861,1		28745861,1	28745861,1				28745861,1			28745861,1
1984	45005840,9	45005840,9		45005840,9	45005840,9				45005840,9			45005840,9
1985	69529285,4	69529285,4		69529285,4	69529285,4				69529285,4			69529285,4
1986	97552865,2	97552865,2		97552865,2	97552865,2				97552865,2			97552865,2
1987	128915934,1	128915934,1		128915934,1	128915934,1				128915934,1			128915934,1
1988	161392122,3	161392122,3		161392122,3	161392122,3				161392122,3			161392122,3
1989	204787389,0	204787389,0		204787389,0	204787389,0				204787389,0			204787389,0
1990	242591295,4	242591295,4		242591295,4	242591295,4				242591295,4			242591295,4
1991	279071619,2	279071619,2		279071619,2	279071619,2				279071619,2			279071619,2
1992	313551702,5	313551702,5		313551702,5	313551702,5				313551702,5			313551702,5
1993	347270477,6	347270477,6		347270477,6	347270477,6				347270477,6			347270477,6
1994	380716553,7	380716553,7		380716553,7	380716553,7				380716553,7			380716553,7
1995	409760950,8	409760950,8		409760950,8	409760950,8				409760950,8			409760950,8
1996	439699579,7	439699579,7		439699579,7	439699579,7				439699579,7			439699579,7
1997	468603270,2	468603270,2		468603270,2	468603270,2				468603270,2			468603270,2
1998	495495702,5	495495702,5		495495702,5	495495702,5				495495702,5			495495702,5
1999	526849838,1	526849838,1		526849838,1	526849838,1				526849838,1			526849838,1
2000	562566283,5	562566283,5		562566283,5	562566283,5				562566283,5			562566283,5
2001	605719917,3	605719917,3		605719917,3	605719917,3				605719917,3			605719917,3
2002	651220017,4	651220017,4		651220017,4	651220017,4				651220017,4			651220017,4
2003	699656135,6	699656135,6		699656135,6	699656135,6				699656135,6			699656135,6
2004	736516409,5	736516409,5		736516409,5	736516409,5				736516409,5			736516409,5
2005	773992128,8	773992128,8		773992128,8	773992128,8				773992128,8			773992128,8
2006	812937745,1	812937745,1		812937745,1	812937745,1				812937745,1			812937745,1
2007	853887826,8	853887826,8		853887826,8	853887826,8				853887826,8			853887826,8
2008	886281123,0	886281123,0		886281123,0	886281123,0				886281123,0			886281123,0
2009	912037351,7	912037351,7		912037351,7	912037351,7				912037351,7			912037351,7
2010	932655587,7	932655587,7		932655587,7	932655587,7				932655587,7			932655587,7
2011	952087564,2	952087564,2		952087564,2	952087564,2				952087564,2			952087564,2
2012	969239502,2	969239502,2		969239502,2	969239502,2				969239502,2			969239502,2
2013	986124691,2	986124691,2		986124691,2	986124691,2				986124691,2			986124691,2
2014	1005676432,1	1005676432,1		1005676432,1	1005676432,1				1005676432,1			1005676432,1
2015	1025998469,4	1025998469,4		1025998469,4	1025998469,4				1025998469,4			1025998469,4
2016	1049537698,7	1049537698,7		1049537698,7	1049537698,7				1049537698,7			1049537698,7
2017	1077033114,6	1077033114,6		1077033114,6	1077033114,6				1077033114,6			1077033114,6
2018	1109638447,2	1109638447,2		1109638447,2	1109638447,2				1109638447,2			1109638447,2
2019	1143906419,0	1143906419,0	0,0	1143906419,0	1143906419,0	0,0			1143906419,0	0,0		1143906419,0
2020	1177078585,0	1107327094,1	61866539,8	1169193633,9	1107327094,1	61866539,8			1169193633,9	61866539,8		1169193633,9
2021	1209189986,5	1071917486,4	122992070,0	1194909556,4	1071917486,4	122992070,0			1194909556,4	122992070,0		1194909556,4
2022	1240274544,0	1037640191,2	183425032,9	1221065224,1	1037640191,2	183425032,9			1221065224,1	183425032,9		1221065224,1
2023	1270365093,5	1004458999,9	243212816,7	1247671816,6	1004458999,9	243212816,7			1247671816,6	243212816,7		1247671816,6
2024	1299493420,9	972338861,9	302401799,0	1274740660,8	972338861,9	302401799,0			1274740660,8	302401799,0		1274740660,8
2025	1327690295,8	941245847,1	361037389,2	1302283236,3	941245847,1	361037389,2			1302283236,3	361037389,2		1302283236,3
2026	1354985503,7	911147110,8	419164070,1	1330311180,9	911147110,8	419164070,1	0,0		1330311180,9	419164070,1		1330311180,9
2027	1381407877,7	882010858,4	476825437,6	1358836296,0	882010858,4	405760230,0	43819567,6		1331590656,0	476825437,6		1358836296,0
2028	1406985329,0	853806311,9	534064240,0	1387870551,9	853806311,9	392785011,9	87348227,6		1333939551,5	534064240,0		1387870551,9
2029	1431744876,0	826503677,7	590922415,9	1417426093,6	826503677,7	380224709,5	130611257,4		1337339644,6	583191756,9	0,0	1409695434,7
2030	1455712673,3	800074114,9	647441131,5	1447515246,4	800074114,9	368066054,8	173633611,3		1341773781,0	564542713,3	29830340,6	1394447168,8
2031	1478914039,2	774489704,8	703660816,4	1478150521,1	774489704,8	356296204,0	216439936,7	0,0	1347225845,5	546490020,3	59549882,7	1380529607,8
2032	1501373482,3	749723421,4	759621198,8	1509344620,2	749723421,4	344902724,3	210674245,5	31035486,4	1336335877,5	529014608,3	89173185,8	1367911215,5
2033	1523114727,4	725749103,1	815361339,9	1541110442,9	725749103,1	333873580,1	205062145,2	61955697,9	1326640526,3	512098017,1	118714703,1	1356561823,3
2034	1544160740,7	702541424,7	870919667,1	1573461091,8	702541424,7	323197121,0	199599544,2	92775782,5	1318113872,4	495722377,1	148188788,2	1346452590,0
2035	1564533754,1	680075871,1	926334006,9	1606409877,9	680075871,1	312862068,8	194282460,2	123510777,1	1310731177,1	479870389,9	177609702,6	1337555963,6
2036	1584255288,5	658328710,8	981641616,2	1639970326,9	658328710,8	302857506,3	189107016,6	154175615,2	1304468848,9	464525310,4	206991623,1	1329845644,3
2037	1603346176,4	637276971,4	1036879213,6	1674156185,0	637276971,4	293172865,2	184069440,5	184785134,6	1299304411,7	449670929,0	236348648,4	1323296548,8
2038	1621826584,6	616898415,1	1092083009,9	1708981424,9	616898415,1	283797915,2	179166059,1	215354084,7	1295216474,1	435291554,3	265694806,4	1317884775,8
2039	1639716034,6	597171515,0	1147288737,0	1744460252,1	597171515,0	274722753,1	174393297,7	245897133,8	1292184699,7	421371996,8	295044061,0	1313587572,8
2040	1657033423,8	578075433,0	1202531677,6	1780607110,6	578075433,0	265937792,5	169747676,8	276428876,6	1290189778,8	407897552,6	324410319,2	1310383304,8
2041	1673797045,3	559589996,8	1257846692,7	1817436689,5	559589996,8	257433753,4	165225809,4	306963841,1	1289213400,7	394853988,2	353807437,9	1308251422,9
2042	1690024607,2	541695679,6	1313268249,8	1854963929,4	541695679,6	249201652,7	160824399,0	337516496,1	1289238227,4	382227525,0	383249230,3	1307172434,9
2043	1705733251,5	524373578,8	1368830449,6	1893204028,4	524373578,8	241232794,3	156540236,7	368101258,4	1290247868,2	370004825,1	412749473,2	1307127877,1
2044	1720939571,8	507605396,4	1424567052,3	1932172448,7	507605396,4	233518760,5	152370199,1	398732499,2	1292226855,3	358172977,3	442321913,3	1308100287,0
2045	1735659631,3	491373419,4	1480511504,0	1971884923,4	491373419,4	226051402,6	148311246,2	429424551,9	1295160620,1	346719482,9	471980274,0	1310073176,3
2046	1749908979,3	475660501,2	1536696961,4	2012357462,7	475660501,2	218822832,6	144360418,7	460191718,6	1299035471,1	335632243,2	501738262,0	1313031006,4
2047	1763702668,1	460450043,7	1593156317,4	2053606361,1	460450043,7	211825414,5	140514836,4	491048277,1	1303838571,6	324899546,3	531609573,6	1316959163,7
2048	1777055268,5	445725979,3	1649922224,7	2095648204,0	445725979,3	205051756,6	136771695,6	522008487,7	1309557919,3	314510054,8	561607901,9	1321843936,0
2049	1789980885,4	431472754,4	1707027120,2	2138499874,6	431472754,4	198494703,8	133128267,4	553086600,4	1316182326,1	304452793,7	591746942,6	1327672490,8
2050	1802493172,8	417675312,8	1764503248,3	2182178561,1	417675312,8	192147329,5	129581895,7	584296861,2	1323701399,1	294717139,3	622040400,8	1334432852,8

Note: The LandGem model runs were updated in this summary table to provide a more representative estimate of landfill gas generation.
This analysis does not include an overlap in waste placement throughput, when waste diversion rates are adjusted.
Therfore, this analysis data will be used for a more representative estimate of greenhouse gas emissions.

WPWMA Landfill Criteria Emissions
Plan Concept 1: Fugitive LFG and Flares
Net Increase in 2050 from 2018 Baseline

Table. LFG Parameters

Parameter	Units	
Number of Flares	n/a	2
LFG Heat Content	Btu/scf	500
Methane Content LFG by Vol	%	50%
Conversion	scf/lbmol	385,15
VOC MW (Hexane)	lb/lbmole	86,2
CO MW	lb/lbmole	28,0
VOC Emission Factor[1]	ppm as hexane	595
CO Emission Factor[2]	ppm	141
Methane MW	lb/lbmole	16,04
CO_2 MW	lb/lbmole	44,01
CO_2 mass/CH_4 mass combusted	lb/lb	2,74
AR5 GWP for CH_4	Unitless	28
AR5 GWP for N_2O	Unitless	265
Hours of Operation	hours/day	24
Days of Operation	days/yr	365
LFG Collection Efficiency		80%
Max. Hourly Flared LFG	MMscf/hr	0,013
Max. Daily Flared LFG	MMscf/day	0,307
Max. Yearly Flared LFG	MMscf/yr	112
CH4 Flare Control, Eff	n/a	0,99
Max Heat Input Rate	MMBtu/hr	6,4
Max Heat Input Rate	MMBtu/yr	56 113
Max. Hourly Fugitive LFG	MMscf/hr	0,0064
Max. Daily Fugitive LFG	MMscf/day	0,1546
Max. Yearly Fugitive LFG	MMscf/yr	56,4464

Notes:
1. VOC Emission factor obtained from AP-42 Section 2.4 - Municipal Solid Waste Landfills, Tables 2.4-2, dated October 2008.
2. CO Emission factor obtained from AP-42 Section 2.4 - Municipal Solid Waste Landfills, Tables 2.4-2, dated October 2008.

Table LFG. Criteria Pollutant Emissions From Fugitive Landfill Gas

Pollutant	Total Fugitive Landfill Gas Emissions			
	Total Hourly Emissions (lb/hr)	Total Daily Emissions (lb/day)	Total Annual Emissions (lb/yr)	Total Annual Emissions (tpy)
VOC	0,86	20,6	7 515	3,8
CO	0,07	1,6	579	0,29

Source ID:	Small Flare at LFGTE		New Flare Zone A & B	
Fuel Type:	LFG		LFG	
Rating LFG Throughput:	27 800	scf/hr	180 000	scf/hr
Heat Rating [1]:	13,9	MMBtu/hr	90,0	MMBtu/hr
Ratio of LFG:	0,134		0,866	

Emission Factors for Flares

Emission Factor	Units	Value	Source
PM_{10}	lb/MMBtu	0,034	
$PM_{2.5}$	lb/MMBtu	0,034	
NO_x	lb/MMBtu	0,06	Permit Limit
CO	lb/MMBtu	0,2	Permit Limit
SO_x	lb/MMcf	33,2	Permit Limit
VOC	ppm	20	NMOC Permit Limit
VOC	lb/MMBtu	0,0455	Calc'd Controlled Limit

Notes:
1. Emission factors for CO and NOx from Permit Limits
2. For VOC, NMOC limit from permit
3. EPA 2018 GHG Factors: https://www.epa.gov/sites/production/files/2018-03/documents/emission-factors_mar_2018_0.pdf
4. EF for SO2 = 200 ppmv(64)/385

Gas Properties for Emission Factor Conversion			
Property	Value	Units	
Molar Volume	385,15	dscf/lb-mol at 1 atm and 60°F	
Fd Factor	8710	scf/MMBtu	Ref:EPA Mtd 19, Table 19-2
Corrected O2	3%		
Molar Weight	86,18	VOC as hexane	

Table. Emissions for Flares - Criteria Pollutants

Pollutant	Total Flare Emissions				Small Flare Emissions		Large Flare Emissions	
	Total Hourly Emissions (lb/hr)	Total Daily Emissions (lb/day)	Total Annual Emissions (lb/yr)	Total Annual Emissions (tpy)	Total Hourly Emissions (lb/hr)	Total Annual Emissions (lb/yr)	Total Hourly Emissions (lb/hr)	Total Annual Emissions (lb/yr)
PM_{10}	0,22	5,23	1 908	0,95	0,03	255,24	0,19	1 653
$PM_{2.5}$	0,22	5,23	1 908	0,95	0,03	255,24	0,19	1 653
NOx	0,4	9,22	3 367	1,68	0,05	450,42	0,33	2 916
VOC	0,29	7,00	2 554	1,28	0,04	341,65	0,25	2 212
CO	1,3	30,75	11 223	5,61	0,17	1501,40	1,11	9 721
SOx	0,43	10,22	3 731	1,87	0,06	499,17	0,37	3 232

WPWMA Landfill GHG Emissions
Plan Concept 1: Fugitive LFG and Flares
Net Increase in 2050 from 2018 Baseline

Table. LFG Parameters

Parameter	Units	
Number of Flares	n/a	2
LFG Heat Content	Btu/scf	500
Methane Content LFG by Vol	%	50%
Conversion	scf/lbmol	385,15
VOC MW (Hexane)	lb/lbmole	86,2
CO MW	lb/lbmole	28,0
VOC Emission Factor[1]	ppm as hexane	595
CO Emission Factor[2]	ppm	141
Methane MW	lb/lbmole	16,04
CO_2 MW	lb/lbmole	44,01
CO_2 mass/CH_4 mass combusted	lb/lb	2,74
AR5 GWP for CH_4	Unitless	28
AR5 GWP for N_2O	Unitless	265
Hours of Operation	hours/day	24
Days of Operation	days/yr	365
LFG Collection Efficiency		80%
Max. Hourly Flared LFG	MMscf/hr	0,007
Max. Daily Flared LFG	MMscf/day	0,158
Max. Yearly Flared LFG	MMscf/yr	58
CH4 Flare Control, Eff	n/a	0,99
Max Heat Input Rate	MMBtu/hr	3,3
Max Heat Input Rate	MMBtu/yr	28 846
Max. Hourly Fugitive LFG	MMscf/hr	0,0049
Max. Daily Fugitive LFG	MMscf/day	0,1173
Max. Yearly Fugitive LFG	MMscf/yr	42,8126

Table LFG. Greenhouse Gas Emissions from Fugitive Landfill Gas

Pollutant	Total Fugitive Landfill Gas Emissions			
	Total Hourly Emissions (lb/hr)	Total Daily Emissions (lb/day)	Total Annual Emissions (lb/yr)	Total Annual Emissions (tpy)
CO_2 (biogenic)	279	6 688	2 441 037	1 221
CH_4 (non-biogenic)	102	2 437	889 667	445
CO_2e (non-biogenic)	2 844	68 248	24 910 673	12 455
CO_2e (biogenic)	279	6 688	2 441 037	1 221

Notes:

1. Methane and CO2 generation is based on the LandGEM values.
2. Fugitive CO2 mass/Fugitive methane mass estimated to be 500, based on the compostion of landfill gas.

Source ID:	Small Flare at LFGTE		New Flare Zone A & B	
Fuel Type:	LFG		LFG	
Rating LFG Throughput:	27 800	scf/hr	180 000	scf/hr
Heat Rating [1]:	13,9	MMBtu/hr	90,0	MMBtu/hr
Ratio of LFG:	0,134		0,866	

Emission Factors for Flares

Emission Factor	Units	Value	Source
N_2O	g/MMBtu	0,63	EPA GHG EFs

Notes:

1. EPA 2018 GHG Factors: https://www.epa.gov/sites/production/files/2018-03/documents/emission-factors_mar_2018_0.pdf

Gas Properties for Emission Factor Conversion		
Property	Value	Units
Molar Volume	385,15	dscf/lb-mol at 1 atm and 60°F
Fd Factor	8710	scf/MMBtu
Corrected O2	3%	
Molar Weight	86,18	VOC as hexane

Ref:EPA Mtd 19, Table 19-2

Emissions for Flares - Greenhouse Gas

GHG Pollutant	Total Flare Emissions			Small Flare Emissions		Large Flare Emissions	
	Total Annual Emissions (lb/yr)	Total Annual Emissions (tpy)	Total Annual Emissions (MT/yr)	Total Annual Emissions (lb/yr)	Total Annual Emissions (MT/yr)	Total Annual Emissions (lb/yr)	Total Annual Emissions (MT/yr)
CO_2 (non-biogenic)[1]	3 263 117	1 632	1 480	436 548	198,02	2 826 569	1 282
CO_2 (biogenic)[2]	6 031 822	3 016	2 736	806 952	366,03	5 224 870	2 370
CH_4 (non-biogenic)[3]	12 015	6	5	1 607	0,73	10 408	4,72
N_2O (non-biogenic)[4]	40,06	0,02	0,02	5,36	0,00	34,70	0,02
CO_2e (non-biogenic)	3 610 153	1 805	1 638	482 975	219,07	3 127 178	1 418
CO_2e (biogenic)	6 031 822	3 016	2 736	806 952	366,03	5 224 870	2 370

Notes:

1. Non-biogenic CO_2 is combustion CO_2 from 99% non-biogenic CH_4 destroyed in the flare.
2. Biogenic CO_2 is CO_2 from LFG that passes through the flare.
3. Non-biogenic CH_4 is the 1% of CH_4 that is not destroyed in the flare .
4. Non-biogenic N_2O is combustion N_2O from methane destroyed. 0.63 g/MMBtu EF from LFG combustion from: https://www.epa.gov/sites/production/files/2018-03/documents/emission-factors_mar_2018_0.pdf

Equations:

Non-biogenic CO_2 (lb/yr) = Max. Yearly Flared LFG (MMscf/yr) x (Methane Content LFG by Vol (%) x 10^6) x Flare Control Efficiency x Methane MW (lb/lb-mole) / 385.15 scf/lb-mole x CO_2 mass/CH_4 mass combusted

Biogenic CO_2 (lb/yr) = Max. Yearly Flared LFG (MMscf/yr) x (CO_2 Content LFG by Vol (%) x 10^6) x CO_2 MW (lb/lb-mole) / 385.15 scf/lb-mole

Non-biogenic CH_4 (lb/yr) = Max. Yearly Flared LFG (MMscf/yr) x (Methane Content LFG by Vol (%) x 10^6) x Methane MW (lb/lb-mole) x (1 - Flare Control Efficiency) / 385.15 scf/lb-mole

Non-biogenic N_2O (lb/yr) = Max Heat Input Rate (MMBtu/yr) x N_2O Content (g/MMBtu) / 453.59 g/lb

Non-biogenic CO_2e (lb/yr) = Non-biogenic CO_2 (lb/yr) + (Non-biogenic CH_4 (lb/yr) x GHG Constant for CH_4) + (Non-biogenic N_2O (lb/yr) x GHG Constant for N_2O)

WPWMA Landfill Criteria Emissions
Plan Concept 2: Fugitive LFG and Flares
Net Increase in 2050 from 2018 Baseline

Table. LFG Parameters

Parameter	Units	
Number of Flares	n/a	2
LFG Heat Content	Btu/scf	500
Methane Content LFG by Vol	%	50%
Conversion	scf/lbmol	385,15
VOC MW (Hexane)	lb/lbmole	86,2
CO MW	lb/lbmole	28,0
VOC Emission Factor[1]	ppm as hexane	595
CO Emission Factor[2]	ppm	141
Methane MW	lb/lbmole	16,04
CO_2 MW	lb/lbmole	44,01
CO_2 mass/CH_4 mass combusted	lb/lb	2,74
AR5 GWP for CH_4	Unitless	28
AR5 GWP for N_2O	Unitless	265
Hours of Operation	hours/day	24
Days of Operation	days/yr	365
LFG Collection Efficiency		80%
Max. Hourly Flared LFG	MMscf/hr	0,011
Max. Daily Flared LFG	MMscf/day	0,272
Max. Yearly Flared LFG	MMscf/yr	99
CH4 Flare Control, Eff	n/a	0,99
Max Heat Input Rate	MMBtu/hr	5,7
Max Heat Input Rate	MMBtu/yr	49 705
Max. Hourly Fugitive LFG	MMscf/hr	0,0061
Max. Daily Fugitive LFG	MMscf/day	0,1459
Max. Yearly Fugitive LFG	MMscf/yr	53,2424

Notes:
1. VOC Emission factor obtained from AP-42 Section 2.4 - Municipal Solid Waste Landfills, Tables 2.4-2, dated October 2008.
2. CO Emission factor obtained from AP-42 Section 2.4 - Municipal Solid Waste Landfills, Tables 2.4-2, dated October 2008.

Table LFG. Criteria Pollutant Emissions From Fugitive Landfill Gas

Pollutant	Total Fugitive Landfill Gas Emissions			
	Total Hourly Emissions (lb/hr)	Total Daily Emissions (lb/day)	Total Annual Emissions (lb/yr)	Total Annual Emissions (tpy)
VOC	0,81	19,4	7 088	3,5
CO	0,06	1,5	546	0,27

Source ID:	Small Flare at LFGTE		New Flare Zone A & B	
Fuel Type:	LFG		LFG	
Rating LFG Throughput:	27 800	scf/hr	180 000	scf/hr
Heat Rating [1]:	13,9	MMBtu/hr	90,0	MMBtu/hr
Ratio of LFG:	0,134		0,866	

Emission Factors for Flares

Emission Factor	Units	Value	Source
PM_{10}	lb/MMBtu	0,034	
$PM_{2.5}$	lb/MMBtu	0,034	
NO_x	lb/MMBtu	0,06	Permit Limit
CO	lb/MMBtu	0,2	Permit Limit
SO_x	lb/MMcf	33,2	Permit Limit
VOC	ppm	20	NMOC Permit Limit
VOC	lb/MMBtu	0,0455	Calc'd Controlled Limit

Notes:
1. Emission factors for CO and NOx from Permit Limits
2. For VOC, NMOC limit from permit
3. EPA 2018 GHG Factors: https://www.epa.gov/sites/production/files/2018-03/documents/emission-factors_mar_2018_0.pdf
4. EF for SO2 = 200 ppmv(64)/385

Gas Properties for Emission Factor Conversion		
Property	Value	Units
Molar Volume	385,15	dscf/lb-mol at 1 atm and 60°F
Fd Factor	8710	scf/MMBtu
Corrected O2	3%	
Molar Weight	86,18	VOC as hexane

Ref:EPA Mtd 19, Table 19-2

Table. Emissions for Flares - Criteria Pollutants

Pollutant	Total Flare Emissions				Small Flare Emissions		Large Flare Emissions	
	Total Hourly Emissions (lb/hr)	Total Daily Emissions (lb/day)	Total Annual Emissions (lb/yr)	Total Annual Emissions (tpy)	Total Hourly Emissions (lb/hr)	Total Annual Emissions (lb/yr)	Total Hourly Emissions (lb/hr)	Total Annual Emissions (lb/yr)
PM_{10}	0,19	4,63	1 690	0,84	0,03	226,09	0,17	1 464
$PM_{2.5}$	0,19	4,63	1 690	0,84	0,03	226,09	0,17	1 464
NOx	0,3	8,17	2 982	1,49	0,05	398,98	0,29	2 583
VOC	0,26	6,20	2 262	1,13	0,03	302,64	0,22	1 960
CO	1,1	27,24	9 941	4,97	0,15	1329,94	0,98	8 611
SOx	0,38	9,06	3 305	1,65	0,05	442,16	0,33	2 863

WPWMA Landfill GHG Emissions
Plan Concept 2: Fugitive LFG and Flares
Net Increase in 2050 from 2018 Baseline

Table. LFG Parameters

Parameter	Units	
Number of Flares	n/a	2
LFG Heat Content	Btu/scf	500
Methane Content LFG by Vol	%	50%
Conversion	scf/lbmol	385,15
VOC MW (Hexane)	lb/lbmole	86,2
CO MW	lb/lbmole	28,0
VOC Emission Factor[1]	ppm as hexane	595
CO Emission Factor[2]	ppm	141
Methane MW	lb/lbmole	16,04
CO_2 MW	lb/lbmole	44,01
CO_2 mass/CH_4 mass combusted	lb/lb	2,74
AR5 GWP for CH_4	Unitless	28
AR5 GWP for N_2O	Unitless	265
Hours of Operation	hours/day	24
Days of Operation	days/yr	365
LFG Collection Efficiency		80%
Max. Hourly Flared LFG	MMscf/hr	0,008
Max. Daily Flared LFG	MMscf/day	0,182
Max. Yearly Flared LFG	MMscf/yr	66
CH4 Flare Control, Eff	n/a	0,99
Max Heat Input Rate	MMBtu/hr	3,8
Max Heat Input Rate	MMBtu/yr	33 138
Max. Hourly Fugitive LFG	MMscf/hr	0,0051
Max. Daily Fugitive LFG	MMscf/day	0,1232
Max. Yearly Fugitive LFG	MMscf/yr	44,9589

Table LFG. Greenhouse Gas Emissions from Fugitive Landfill Gas

Pollutant	Total Fugitive Landfill Gas Emissions			
	Total Hourly Emissions (lb/hr)	Total Daily Emissions (lb/day)	Total Annual Emissions (lb/yr)	Total Annual Emissions (tpy)
CO_2 (biogenic)	293	7 023	2 563 412	1 282
CH_4 (non-biogenic)	107	2 560	934 268	467
CO_2e (non-biogenic)	2 986	71 670	26 159 500	13 080
CO_2e (biogenic)	293	7 023	2 563 412	1 282

Notes:
1. Methane and CO2 generation is based on the LandGEM values.
2. Fugitive CO2 mass/Fugitive methane mass estimated to be 500, based on the compostion of landfill gas.

Source ID:	Small Flare at LFGTE		New Flare Zone A & B	
Fuel Type:	LFG		LFG	
Rating LFG Throughput:	27 800	scf/hr	180 000	scf/hr
Heat Rating [1]:	13,9	MMBtu/hr	90,0	MMBtu/hr
Ratio of LFG:	0,134		0,866	

Emission Factors for Flares

Emission Factor	Units	Value	Source
N_2O	g/MMBtu	0,63	EPA GHG EFs

Notes:
1. EPA 2018 GHG Factors: https://www.epa.gov/sites/production/files/2018-03/documents/emission-factors_mar_2018_0.pdf

Gas Properties for Emission Factor Conversion			
Property	Value	Units	
Molar Volume	385,15	dscf/lb-mol at 1 atm and 60°F	
Fd Factor	8710	scf/MMBtu	Ref:EPA Mtd 19, Table 19-2
Corrected O2	3%		
Molar Weight	86,18	VOC as hexane	

Emissions for Flares - Greenhouse Gas

GHG Pollutant	Total Flare Emissions			Small Flare Emissions		Large Flare Emissions	
	Total Annual Emissions (lb/yr)	Total Annual Emissions (tpy)	Total Annual Emissions (MT/yr)	Total Annual Emissions (lb/yr)	Total Annual Emissions (MT/yr)	Total Annual Emissions (lb/yr)	Total Annual Emissions (MT/yr)
CO_2 (non-biogenic)[1]	3 748 707	1 874	1 700	501 511	227,48	3 247 196	1 473
CO_2 (biogenic)[2]	6 929 429	3 465	3 143	927 036	420,50	6 002 393	2 723
CH_4 (non-biogenic)[3]	13 803	7	6	1 847	0,84	11 956	5,42
N_2O (non-biogenic)[4]	46,03	0,02	0,02	6,16	0,00	39,87	0,02
CO_2e (non-biogenic)	4 147 387	2 074	1 881	554 848	251,68	3 592 539	1 630
CO_2e (biogenic)	6 929 429	3 465	3 143	927 036	420,50	6 002 393	2 723

Notes:
1. Non-biogenic CO_2 is combustion CO_2 from 99% non-biogenic CH_4 destroyed in the flare.
2. Biogenic CO_2 is CO_2 from LFG that passes through the flare.
3. Non-biogenic CH_4 is the 1% of CH_4 that is not destroyed in the flare .
4. Non-biogenic N_2O is combustion N_2O from methane destroyed. 0.63 g/MMBtu EF from LFG combustion from: https://www.epa.gov/sites/production/files/2018-03/documents/emission-factors_mar_2018_0.pdf

Equations:

Non-biogenic CO_2 (lb/yr) = Max. Yearly Flared LFG (MMscf/yr) x (Methane Content LFG by Vol (%) x 10^6) x Flare Control Efficiency x Methane MW (lb/lb-mole) / 385.15 scf/lb-mole x CO_2 mass/CH_4 mass combusted

Biogenic CO_2 (lb/yr) = Max. Yearly Flared LFG (MMscf/yr) x (CO_2 Content LFG by Vol (%) x 10^6) x CO_2 MW (lb/lb-mole) / 385.15 scf/lb-mole

Non-biogenic CH_4 (lb/yr) = Max. Yearly Flared LFG (MMscf/yr) x (Methane Content LFG by Vol (%) x 10^6) x Methane MW (lb/lb-mole) x (1 - Flare Control Efficiency) / 385.15 scf/lb-mole

Non-biogenic N_2O (lb/yr) = Max Heat Input Rate (MMBtu/yr) x N_2O Content (g/MMBtu) / 453.59 g/lb

Non-biogenic CO_2e (lb/yr) = Non-biogenic CO_2 (lb/yr) + (Non-biogenic CH_4 (lb/yr) x GHG Constant for CH_4) + (Non-biogenic N_2O (lb/yr) x GHG Constant for N_2O)

WPWMA Landfill Toxic Emissions
Plan Concept 1: Fugitive LFG and Flares
Net Increase in 2050 from 2018 Baseline

LFG Parameters

Parameter	Units	
Number of Flares	n/a	2
LFG Heat Content	Btu/scf	500
Methane Content LFG by Vol	%	50%
CO_2 Content LFG by Vol	%	42%
Hours of Operation	hours/day	24
Days of Operation	days/yr	365
Max. Hourly Fugitive LFG	MMscf/hr	0,006
Max. Daily Fugitive LFG	MMscf/day	0,15
Max. Yearly Fugitive LFG	MMscf/yr	56
LFG Collection Efficiency		80%
Max. Yearly Flared LFG	MMscf/yr	112
Max. Hourly Flared LFG	MMscf/hr	0,01
Flare Control, Eff	n/a	0.98 - 0.997
Flare Heat Input	MMBtu/yr	56 113
Flare Heat Input	MMBtu/hr	6

Source ID:	Small Flare at LFGTE		New Flare Zone A and B	
Fuel Type:	LFG		LFG	
Rating LFG Throughput:	27 800	scf/hr	180 000	scf/hr
Heat Rating [1]:	13,9	MMBtu/hr	90,0	MMBtu/hr
Ratio of LFG:	0,134		0,866	

Air Toxic Emissions From Fugitive Landfill Gas

Toxic Pollutant	CAS	Molecular Weight (lb/lbmol)	Conc. In LFG (ppmv) (1)	Uncontrolled EF (lb/MMscf LFG) (2)	Total Fugitive LFG TAC Emissions	
					Fugitive LFG Hourly Toxic Emissions (lb/hr)	Fugitive LFG Annual Toxic Emissions (lb/yr)
1,1,1-Trichloroethane (methyl chloroform)	71-55-6	133,42	0,1680	0,05907	0,0004	3,3340
1,1,2,2-Tetrachloroethane	79-34-5	167,85	0,0700	0,03096	0,0002	1,7477
1,1-Dichloroethane	75-34-3	98,96	0,7410	0,19323	0,0012	10,9074
1,1-Dichloroethene	75-35-4	96,94	0,0920	0,02350	0,0002	1,3266
1,2-Dichloroethane (Ethylene Dichloride)	107-06-2	98,96	0,1200	0,03129	0,0002	1,7664
1,2-Dichloropropane	78-87-5	112,98	0,0230	0,00685	0,0000	0,3865
Acrylonitrile	107-13-1	53,06	0,0360	0,00503	0,0000	0,2841
Benzene	71-43-2	78,11	0,9720	0,20007	0,0013	11,2931
Carbon Disulfide	75-15-0	76,13	0,3200	0,06420	0,0004	3,6237
Carbon Tetrachloride	56-23-5	153,84	0,0070	0,00284	0,0000	0,1602
Carbonyl Sulfide	75-15-0	76,13	0,1830	0,03671	0,0002	2,0723
Chlorobenzene	108-90-7	112,56	0,2270	0,06733	0,0004	3,8006
Chloroethane (Ethyl Chloride)	75-00-3	64,52	0,2390	0,04063	0,0003	2,2937
Chloroform	67-66-3	119,39	0,0210	0,00661	0,0000	0,3729
Dichloromethane (Methylene Chloride)	75-09-2	84,94	3,3950	0,75990	0,0049	42,8937
Ethylbenzene	100-41-4	106,16	6,7890	1,89921	0,0122	107,2034
Hexane	110-54-3	86,17	2,3240	0,52771	0,0034	29,7875
Mercury (Total)*	7439-97-6	200,61	0,0003	0,00015	0,0000	0,0087
Methyl Ethyl Ketone	78-93-3	72,11	10,5570	2,00605	0,0129	113,2342
Methyl Isobutyl Ketone	108-10-1	100,16	0,7500	0,19795	0,0013	11,1737
Perchloroethylene (Tetrachloroethylene)	127-18-4	165,83	1,1930	0,52133	0,0034	29,4270
Toluene	108-88-3	92,13	25,4050	6,16774	0,0397	348,1465
Trichloroethylene (Trichloroethene)	79-01-6	131,38	0,6810	0,23577	0,0015	13,3082
Vinyl Chloride	75-01-4	62,50	1,0770	0,17738	0,0011	10,0124
Xylenes	1330-20-7	106,16	16,5820	4,63877	0,0299	261,8422

Notes:

1.Average concentration of compounds found in LFG based on "Waste Industry Air Coalition Comparison of Recent Landfill Gas Analyses with Historic AP-42 Values." *Mercury concentration is based on the Revised EPA AP-42 Section 2.4 Table 2.41 (11/98).

2. Emission Conversion from ppmv to lb/MMscf example:
EF (lb/MMscf) = ppmv x lb/lbmol x 1 scf / 0.7302 scf-atm/lbmol-^{o}R/519.7 ^{o}R

WPWMA Landfill Toxic Emissions
Plan Concept 1: Fugitive LFG and Flares
Net Increase in 2050 from 2018 Baseline

Air Toxic Emissions From Flares								HARP2 Input			
								Small Flare Emissions		Large Flare Emissions	
Toxic Pollutant	CAS	Molecular Weight (lb/lbmol)	Conc. In LFG (ppmv) (1)	Uncontrolled EF (lb/MMscf LFG) (2)	Flare Control Efficiency (3)	Flare Hourly Toxic Emissions (lb/hr)	Flare Annual Toxic Emissions (lb/yr)	Small Flare Hourly Flare Emissions (lb/hr)	Small Flare Annual Flare Emissions (lb/yr)	Hourly Emissions for Large Flare (lb/hr)	Annual Emissions for Large Flare (lb/yr)
1,1,1-Trichloroethane (Methyl Chloroform)	71-55-6	133,42	0,1680	0,05907	98,0	1,51E-05	0,1326	2,02E-06	1,77E-02	1,31E-05	1,15E-01
1,1,2,2-Tetrachloroethane	79-34-5	167,85	0,0700	0,03096	98,0	7,93E-06	0,0695	1,06E-06	9,30E-03	6,87E-06	6,02E-02
1,1-Dichloroethane	75-34-3	98,96	0,7410	0,19323	98,0	4,95E-05	0,4337	6,62E-06	5,80E-02	4,29E-05	3,76E-01
1,1-Dichloroethene	75-35-4	96,94	0,0920	0,02350	98,0	6,02E-06	0,0527	8,06E-07	7,06E-03	5,22E-06	4,57E-02
1,2-Dichloroethane (Ethylene Dichloride)	107-06-2	98,96	0,1200	0,03129	98,0	8,02E-06	0,0702	1,07E-06	9,40E-03	6,95E-06	6,08E-02
1,2-Dichloropropane (Propylene Dichloride)	78-87-5	112,98	0,0230	0,00685	98,0	1,75E-06	0,0154	2,35E-07	2,06E-03	1,52E-06	1,33E-02
Acrylonitrile	107-13-1	53,06	0,0360	0,00503	99,7	1,93E-07	0,0017	2,59E-08	2,27E-04	1,68E-07	1,47E-03
Benzene	71-43-2	78,11	0,9720	0,20007	99,7	7,69E-06	0,0674	1,03E-06	9,01E-03	6,66E-06	5,83E-02
Carbon Disulfide	75-15-0	76,13	0,3200	0,06420	99,7	2,47E-06	0,0216	3,30E-07	2,89E-03	2,14E-06	1,87E-02
Carbon Tetrachloride	56-23-5	153,84	0,0070	0,00284	98,0	7,27E-07	0,0064	9,73E-08	8,52E-04	6,30E-07	5,52E-03
Carbonyl Sulfide	75-15-0	76,13	0,1830	0,03671	99,7	1,41E-06	0,0124	1,89E-07	1,65E-03	1,22E-06	1,07E-02
Chlorobenzene	108-90-7	112,56	0,2270	0,06733	98,0	1,73E-05	0,1511	2,31E-06	2,02E-02	1,49E-05	1,31E-01
Chloroethane (Ethyl Chloride)	75-00-3	64,52	0,2390	0,04063	98,0	1,04E-05	0,0912	1,39E-06	1,22E-02	9,02E-06	7,90E-02
Chloroform	67-66-3	119,39	0,0210	0,00661	98,0	1,69E-06	0,0148	2,26E-07	1,98E-03	1,47E-06	1,28E-02
Dichloromethane (Methylene Chloride)	75-09-2	84,94	3,3950	0,75990	98,0	1,95E-04	1,7056	2,60E-05	2,28E-01	1,69E-04	1,48E+00
Ethylbenzene	100-41-4	106,16	6,7890	1,89921	99,7	7,30E-05	0,6394	9,77E-06	8,55E-02	6,32E-05	5,54E-01
Hexane	110-54-3	86,17	2,3240	0,52771	99,7	2,03E-05	0,1777	2,71E-06	2,38E-02	1,76E-05	1,54E-01
Mercury (Total)*	7439-97-6	200,61	0,0003	0,00015	0,0	1,98E-06	0,0173	2,65E-07	2,32E-03	1,71E-06	1,50E-02
Methyl Ethyl Ketone	78-93-3	72,11	10,5570	2,00605	99,7	7,71E-05	0,6754	1,03E-05	9,04E-02	6,68E-05	5,85E-01
Methyl Isobutyl Ketone	108-10-1	100,16	0,7500	0,19795	99,7	7,61E-06	0,0666	1,02E-06	8,92E-03	6,59E-06	5,77E-02
Perchloroethylene (Tetrachloroethylene)	127-18-4	165,83	1,1930	0,52133	98,0	1,34E-04	1,1701	1,79E-05	1,57E-01	1,16E-04	1,01E+00
Toluene	108-88-3	92,13	25,4050	6,16774	99,7	2,37E-04	2,0766	3,17E-05	2,78E-01	2,05E-04	1,80E+00
Trichloroethylene (Trichloroethene)	79-01-6	131,38	0,6810	0,23577	98,0	6,04E-05	0,5292	8,08E-06	7,08E-02	5,23E-05	4,58E-01
Vinyl Chloride	75-01-4	62,50	1,0770	0,17738	98,0	4,54E-05	0,3981	6,08E-06	5,33E-02	3,94E-05	3,45E-01
Xylenes	1330-20-7	106,16	16,5820	4,63877	99,7	1,78E-04	1,5618	2,39E-05	2,09E-01	1,54E-04	1,35E+00
Hydrochloric Acid (HCl)**	7647-01-0	36,46	74,0000	7,10974	0,0	9,11E-02	797,9025	1,22E-02	1,07E+02	7,89E-02	6,91E+02

Notes:

1.Average concentration of compounds found in LFG based on "Waste Industry Air Coalition Comparison of Recent Landfill Gas Analyses with Historic AP-42 Values." *Mercury concentration is based on the Revised EPA AP-42 Section 2.4 Table 2.41 (11/98). **HCl default value based on chlorinated compounds in LFG, forming HCl when combusted in control equipment, default 0f 74 ppmv for landfills with majority of waste after 1992.

2. Emission Conversion from ppmv to lb/MMscf example:

EF (lb/MMscf) = ppmv x lb/lbmol x 1 scf / 0.7302 scf-atm/lbmol-^{o}R/519.7 ^{o}R

3. Typical control efficiency for flares, as found in AP-42, Table 2.4-3.

WPWMA Landfill Toxic Emissions
Plan Concept 2: Fugitive LFG and Flares
Net Increase in 2050 from 2018 Baseline

LFG Parameters

Parameter	Units	
Number of Flares	n/a	2
LFG Heat Content	Btu/scf	500
Methane Content LFG by Vol	%	50%
CO_2 Content LFG by Vol	%	42%
Hours of Operation	hours/day	24
Days of Operation	days/yr	365
Max. Hourly Fugitive LFG	MMscf/hr	0,006
Max. Daily Fugitive LFG	MMscf/day	0,15
Max. Yearly Fugitive LFG	MMscf/yr	53
LFG Collection Efficiency		80%
Max. Yearly Flared LFG	MMscf/yr	99
Max. Hourly Flared LFG	MMscf/hr	0,01
Flare Control, Eff	n/a	0.98 - 0.997
Flare Heat Input	MMBtu/yr	49 705
Flare Heat Input	MMBtu/hr	5,7

Source ID:	Small Flare at LFGTE		New Flare Zone A and B	
Fuel Type:	LFG		LFG	
Rating LFG Throughput:	27 800	scf/hr	180 000	scf/hr
Heat Rating [1]:	13,9	MMBtu/hr	90,0	MMBtu/hr
Ratio of LFG:	0,134		0,866	

Table XX. Air Toxic Emissions From Fugitive Landfill Gas

Toxic Pollutant	CAS	Molecular Weight (lb/lbmol)	Conc. In LFG (ppmv) (1)	Uncontrolled EF (lb/MMscf LFG) (2)	Total Fugitive LFG TAC Emissions	
					Fugitive LFG Hourly Toxic Emissions (lb/hr)	Fugitive LFG Annual Toxic Emissions (lb/yr)
1,1,1-Trichloroethane (methyl chloroform)	71-55-6	133,42	0,1680	0,05907	0,0004	3,1448
1,1,2,2-Tetrachloroethane	79-34-5	167,85	0,0700	0,03096	0,0002	1,6485
1,1-Dichloroethane	75-34-3	98,96	0,7410	0,19323	0,0012	10,2882
1,1-Dichloroethene	75-35-4	96,94	0,0920	0,02350	0,0001	1,2513
1,2-Dichloroethane (Ethylene Dichloride)	107-06-2	98,96	0,1200	0,03129	0,0002	1,6661
1,2-Dichloropropane	78-87-5	112,98	0,0230	0,00685	0,0000	0,3646
Acrylonitrile	107-13-1	53,06	0,0360	0,00503	0,0000	0,2680
Benzene	71-43-2	78,11	0,9720	0,20007	0,0012	10,6521
Carbon Disulfide	75-15-0	76,13	0,3200	0,06420	0,0004	3,4180
Carbon Tetrachloride	56-23-5	153,84	0,0070	0,00284	0,0000	0,1511
Carbonyl Sulfide	75-15-0	76,13	0,1830	0,03671	0,0002	1,9547
Chlorobenzene	108-90-7	112,56	0,2270	0,06733	0,0004	3,5849
Chloroethane (Ethyl Chloride)	75-00-3	64,52	0,2390	0,04063	0,0002	2,1635
Chloroform	67-66-3	119,39	0,0210	0,00661	0,0000	0,3518
Dichloromethane (Methylene Chloride)	75-09-2	84,94	3,3950	0,75990	0,0046	40,4590
Ethylbenzene	100-41-4	106,16	6,7890	1,89921	0,0115	101,1182
Hexane	110-54-3	86,17	2,3240	0,52771	0,0032	28,0967
Mercury (Total)*	7439-97-6	200,61	0,0003	0,00015	0,0000	0,0082
Methyl Ethyl Ketone	78-93-3	72,11	10,5570	2,00605	0,0122	106,8068
Methyl Isobutyl Ketone	108-10-1	100,16	0,7500	0,19795	0,0012	10,5395
Perchloroethylene (Tetrachloroethylene)	127-18-4	165,83	1,1930	0,52133	0,0032	27,7566
Toluene	108-88-3	92,13	25,4050	6,16774	0,0375	328,3848
Trichloroethylene (Trichloroethene)	79-01-6	131,38	0,6810	0,23577	0,0014	12,5528
Vinyl Chloride	75-01-4	62,50	1,0770	0,17738	0,0011	9,4441
Xylenes	1330-20-7	106,16	16,5820	4,63877	0,0282	246,9793

Notes:

1.Average concentration of compounds found in LFG based on "Waste Industry Air Coalition Comparison of Recent Landfill Gas Analyses with Historic AP-42 Values." *Mercury concentration is based on the Revised EPA AP-42 Section 2.4 Table 2.41 (11/98). **HCl default value based on chlorinated compounds in LFG, forming HCl, default 0f 74 ppmv for landfills with majority of waste after 1992.

2. Emission Conversion from ppmv to lb/MMscf example:
EF (lb/MMscf) = ppmv x lb/lbmol x 1 scf / 0.7302 scf-atm/lbmol-^{o}R/519.7 ^{o}R

WPWMA Landfill Toxic Emissions
Plan Concept 2: Fugitive LFG and Flares
Net Increase in 2050 from 2018 Baseline

Table XX. Air Toxic Emissions From Flares								HARP2 Input			
								Small Flare Emissions		Large Flare Emissions	
Toxic Pollutant	CAS	Molecular Weight (lb/lbmol)	Conc. In LFG (ppmv) (1)	Uncontrolled EF (lb/MMscf LFG) (2)	Flare Control Efficiency (3)	Flare Hourly Toxic Emissions (lb/hr)	Flare Annual Toxic Emissions (lb/yr)	Small Flare Hourly Flare Emissions (lb/hr)	Small Flare Annual Flare Emissions (lb/yr)	Hourly Emissions for Large Flare (lb/hr)	Annual Emissions for Large Flare (lb/yr)
1,1,1-Trichloroethane (Methyl Chloroform)	71-55-6	133,42	0,1680	0,05907	98,0	1,34E-05	0,1174	1,79E-06	1,57E-02	1,16E-05	1,02E-01
1,1,2,2-Tetrachloroethane	79-34-5	167,85	0,0700	0,03096	98,0	7,03E-06	0,0616	9,40E-07	8,24E-03	6,09E-06	5,33E-02
1,1-Dichloroethane	75-34-3	98,96	0,7410	0,19323	98,0	4,39E-05	0,3842	5,87E-06	5,14E-02	3,80E-05	3,33E-01
1,1-Dichloroethene	75-35-4	96,94	0,0920	0,02350	98,0	5,33E-06	0,0467	7,14E-07	6,25E-03	4,62E-06	4,05E-02
1,2-Dichloroethane (Ethylene Dichloride)	107-06-2	98,96	0,1200	0,03129	98,0	7,10E-06	0,0622	9,50E-07	8,32E-03	6,15E-06	5,39E-02
1,2-Dichloropropane (Propylene Dichloride)	78-87-5	112,98	0,0230	0,00685	98,0	1,55E-06	0,0136	2,08E-07	1,82E-03	1,35E-06	1,18E-02
Acrylonitrile	107-13-1	53,06	0,0360	0,00503	99,7	1,71E-07	0,0015	2,29E-08	2,01E-04	1,48E-07	1,30E-03
Benzene	71-43-2	78,11	0,9720	0,20007	99,7	6,81E-06	0,0597	9,11E-07	7,98E-03	5,90E-06	5,17E-02
Carbon Disulfide	75-15-0	76,13	0,3200	0,06420	99,7	2,19E-06	0,0191	2,92E-07	2,56E-03	1,89E-06	1,66E-02
Carbon Tetrachloride	56-23-5	153,84	0,0070	0,00284	98,0	6,44E-07	0,0056	8,62E-08	7,55E-04	5,58E-07	4,89E-03
Carbonyl Sulfide	75-15-0	76,13	0,1830	0,03671	99,7	1,25E-06	0,0109	1,67E-07	1,46E-03	1,08E-06	9,48E-03
Chlorobenzene	108-90-7	112,56	0,2270	0,06733	98,0	1,53E-05	0,1339	2,04E-06	1,79E-02	1,32E-05	1,16E-01
Chloroethane (Ethyl Chloride)	75-00-3	64,52	0,2390	0,04063	98,0	9,22E-06	0,0808	1,23E-06	1,08E-02	7,99E-06	7,00E-02
Chloroform	67-66-3	119,39	0,0210	0,00661	98,0	1,50E-06	0,0131	2,01E-07	1,76E-03	1,30E-06	1,14E-02
Dichloromethane (Methylene Chloride)	75-09-2	84,94	3,3950	0,75990	98,0	1,72E-04	1,5108	2,31E-05	2,02E-01	1,49E-04	1,31E+00
Ethylbenzene	100-41-4	106,16	6,7890	1,89921	99,7	6,47E-05	0,5664	8,65E-06	7,58E-02	5,60E-05	4,91E-01
Hexane	110-54-3	86,17	2,3240	0,52771	99,7	1,80E-05	0,1574	2,40E-06	2,11E-02	1,56E-05	1,36E-01
Mercury (Total)*	7439-97-6	200,61	0,0003	0,00015		1,75E-06	0,0153	2,34E-07	2,05E-03	1,52E-06	1,33E-02
Methyl Ethyl Ketone	78-93-3	72,11	10,5570	2,00605	99,7	6,83E-05	0,5983	9,14E-06	8,00E-02	5,92E-05	5,18E-01
Methyl Isobutyl Ketone	108-10-1	100,16	0,7500	0,19795	99,7	6,74E-06	0,0590	9,02E-07	7,90E-03	5,84E-06	5,11E-02
Perchloroethylene (Tetrachloroethylene)	127-18-4	165,83	1,1930	0,52133	98,0	1,18E-04	1,0365	1,58E-05	1,39E-01	1,02E-04	8,98E-01
Toluene	108-88-3	92,13	25,4050	6,16774	99,7	2,10E-04	1,8394	2,81E-05	2,46E-01	1,82E-04	1,59E+00
Trichloroethylene (Trichloroethene)	79-01-6	131,38	0,6810	0,23577	98,0	5,35E-05	0,4688	7,16E-06	6,27E-02	4,64E-05	4,06E-01
Vinyl Chloride	75-01-4	62,50	1,0770	0,17738	98,0	4,03E-05	0,3527	5,39E-06	4,72E-02	3,49E-05	3,05E-01
Xylenes	1330-20-7	106,16	16,5820	4,63877	99,7	1,58E-04	1,3834	2,11E-05	1,85E-01	1,37E-04	1,20E+00
Hydrochloric Acid (HCl)**	7647-01-0	36,46	74,0000	7,10974		8,07E-02	706,7829	1,08E-02	9,46E+01	6,99E-02	6,12E+02

Notes:

1.Average concentration of compounds found in LFG based on "Waste Industry Air Coalition Comparison of Recent Landfill Gas Analyses with Historic AP-42 Values." *Mercury concentration is based on the Revised EPA AP-42 Section 2.4 Table 2.41 (11/98). **HCl default value based on chlorinated compounds in LFG, forming HCl, default 0f 74 ppmv for landfills with majority of waste after 1992.

2. Emission Conversion from ppmv to lb/MMscf example:

EF (lb/MMscf) = ppmv x lb/lbmol x 1 scf / 0.7302 scf-atm/lbmol-^{o}R/519.7 ^{o}R

3. Typical control efficiency for flares, as found in AP-42, Table 2.4-3.

Traffic Flow and Vehicle Quantities

Routes correspond with PDF maps located at \\sacfpp01\Proj\WPWMA\683386P2\EIR\06-AirQuality\Data\Traffic_Routes; Source names correspond with HRA Modeling Setup workbook (WPWMA_Setup.xlsx)

Vehicle counts and fleet mix from \\sacfpp01\Proj\WPWMA\683386P2\Material_Flow_Chart

2018 Traffic

Traffic Type	Route Start	Route End	Source Name	Road Length, One Way (meters)	Road Length, One Way (miles)	Percent Paved Road (%)	Paved Road Length, (meters)	Unpaved Road Length (meters)	Annual Vehicle Qty	*LDA*	*LDT1 and LDT2*	*LHD1*	*LHD2*	*MDV*	*MHD small*	*MHD large*	*HHD*	*Vehicle Qty Check*	Notes
Inbound Customers	Direct	MRF		475	0,295	100%	475	-	35 755	-	427	1 016	3 414	656	1 680	26 430	2 132		WPWMA data combines MRF and C&D vehicles to Landfill. Ratio of vehicles based on tonnage allocation between MRF and C&D
Internal Ops	MRF	Landfill		1490	0,926	80%	1 192	298	21 719	-	-	-	3	3	15	12 921	8 777		WPWMA data combines MRF and C&D vehicles to Inert. Assume all vehicles follow MRF to Inert route since Flow Chart does not specify C&D to Inert stream and traffic route is similar.
Internal Ops	MRF	Inert		955	0,593	90%	860	96	461	-	-	-	-	-	-	461	-		WPWMA data combines MRF and C&D Outbound Recyclables. Ratio of vehicles based on tonnage allocation between MRF and C&D
Outbound Recyclables	MRF	Market/Reuse		545	0,339	100%	545	-	2 879	-	1	-	10	15	23	822	2 009		
Inbound Customers	Direct	Compost		735	0,457	100%	735	-	12 206	-	35	566	2 919	164	1 800	6 399	323		
Internal Ops	Compost	Landfill				80%	-	-	negligible										Assumed to be negligible for analysis.
Outbound Recyclables	Compost	Market/Reuse		490	0,304	100%	490	-	2 703	-							2 703		Per WPWMA, compost leaves site in large tractor trailers - assume this is equivalent to HHD vehicle class.
Inbound Customers	Direct	C&D		660	0,410	100%	660	-	25 759	-	594	1 913	9 451	529	8 919	3 840	513		
Internal Ops	C&D	Landfill		1150	0,715	80%	920	230	3 446	-	-	-	0	1	2	2 050	1 393		WPWMA data combines MRF and C&D vehicles to Landfill. Ratio of vehicles based on tonnage allocation between MRF and C&D
Outbound Recyclables	C&D	Market/Reuse		660	0,410	100%	660	-	1 850	-	1	-	7	9	14	528	1 290		WPWMA data combines MRF and C&D Outbound Recyclables. Ratio of vehicles based on tonnage allocation between MRF
Inbound Customers	Direct	Inert		1045	0,649	100%	1 045	-	15 149	-	9 859	21	343	6	3 046	1 779	95		
Internal Ops	Inert	Landfill				80%	-	-	negligible										Assumed to be negligible for analysis.
Outbound Recyclables	Inert	Market/Reuse		1045	0,649	100%	1 045	-	negligible										Assumed to be negligible for analysis.
Inbound Customers	Direct	HHW - Weekday		310	0,193	100%	310	-	10 611	-	9 533	10	37	7	26	999	-		WPWMA data combines HHW and Buyback vehicles. Ratio of vehicles based on vehicle allocation for HHW weekday and total HHW/Buyback vehicles.
Inbound Customers	Direct	HHW - Weekend		440	0,273	100%	440	-	7 243	-	6 507	7	25	5	18	682	-		WPWMA data combines HHW and Buyback vehicles. Ratio of vehicles based on vehicle allocation for HHW weekend and total HHW/Buyback vehicles.
Internal Ops	HHW	MRF				100%	-	-	negligible										Assumed to be negligible for analysis.
Outbound Recyclables	HHW	Contractor				100%	-	-	negligible										Assumed to be negligible for analysis.
Inbound Customers	Direct	Public - Self Haul to Public		420	0,261	100%	420	-	108 430	-	108 430	-	-	-	-	-	-		
Inbound Customers	Direct	Public - Self Haul to Compost		440	0,273	100%	440	-	27 745	-	27 745	-	-	-	-	-	-		
Internal Ops	Public	MRF		795	0,494	100%	795	-	1 290	-	-	-	1	-	12	824	452		WPWMA data combines Public vehicles to MRF or C&D. Ratio of vehicles based on tonnage allocation between MRF and C&D
Internal Ops	Public	C&D		945	0,587	90%	851	95	1 360	-	-	-	2	-	13	869	477		WPWMA data combines Public vehicles to MRF or C&D. Ratio of vehicles based on tonnage allocation between MRF and C&D
Internal Ops	Public	Landfill		1320	0,820	80%	1 056	264	866	-	-	-	-	-	-	866	-		
Inbound Customers	Direct	Buyback - Public		325	0,202	100%	325	-	27 473	-	24 680	25	96	17	68	2 585	-		WPWMA data combines HHW and Buyback vehicles. Ratio of vehicles based on vehicle allocation for Buyback public and total HHW/Buyback vehicles.
Inbound Customers	Direct	Buyback - Commercial		550	0,342	100%	550	-	5 126	-	4 605	5	18	3	13	482	-		WPWMA data combines HHW and Buyback vehicles. Ratio of vehicles based on vehicle allocation for Buyback commercial and total HHW/Buyback vehicles.
Internal Ops	Buyback	MRF				100%	-	-	negligible										Assumed to be negligible for analysis.
Outbound Recyclables	Buyback	Market/Reuse				100%	-	-	negligible										Assumed to be negligible for analysis.
Inbound Customers	Direct	Landfill		1040	0,646	80%	832	208	17 055	-	368	284	1 872	226	3 756	9 949	600		

2050 Traffic - Plan Concept 1

Traffic Type	Route Start	Route End	Source Name	Road Length, One Way (meters)	Road Length, One Way (miles)	Percent Paved Road (%)	Paved Road Length (meters)	Unpaved Road Length (meters)	Annual Vehicle Qty	*LDA*	*LDT1 and LDT2*	*LHD1*	*LHD2*	*MDV*	*MHD small*	*MHD large*	*HHD*	*Vehicle Qty Check*	Notes
Inbound Customers	Direct	MRF	MRF Inbound Customers	466	0,290	100%	466	-	61 790	-	738	1 756	5 900	1 134	2 903	45 675	3 684		
Internal Ops	MRF	Landfill	MRF to Landfill Internal Ops Vehicles	3 342	2,077	80%	2 674	668	36 389	-	-	-	4	6	25	21 648	14 706		
Internal Ops	MRF	Inert	MRF to Inert Internal Ops Vehicles	838	0,520	90%	754	84	869	-	-	-	-	-	-	869	-		
Internal Ops	MRF	Compost	MRF to Compost Internal Ops Vehciles after crossing is built	654	0,406	90%	589	65	985	-	-	-	-	-	-	985	-		Assumed to be same vehicle type as MRF Inert.
Outbound Recyclables	MRF	Market/Reuse	MRF Outbound Recyclabes	524	0,326	100%	524	-	5 426	-	2	-	20	28	42	1 549	3 785		
Inbound Customers	Direct	Compost	Compost Inbound Customers	770	0,479	100%	770	-	28 594	-	82	1 326	6 838	384	4 217	14 990	757		
Internal Ops	Compost	Landfill	Compost to landfill Internal Ops Vehicles	3 251	2,020	80%	2 601	650	negligible	-									Assumed to be negligible for analysis.
Outbound Recyclables	Compost	Market/Reuse	Outbound Material	770	0,479	100%	770	-	6 947	-	-	-	-	-	-	-	6 947		
Inbound Customers	Direct	C&D	CD Inert Inbound Customers	532	0,330	100%	532	-	61 856	-	1 426	4 594	22 695	1 270	21 418	9 221	1 232		
Internal Ops	C&D	Landfill	CD Inert to Landfill Internal Ops Vehicles	2 559	1,590	80%	2 047	512	7 113	-	-	-	1	1	5	4 232	2 875		
Outbound Recyclables	C&D	Market/Reuse	CD Inert Outbound Recylables	532	0,330	100%	532	-	negligible	-									Assumed to be negligible for analysis.
Inbound Customers	Direct	Inert	CD Inert Inbound Customers	532	0,330	100%	532	-	28 549	-	18 580	40	646	11	5 740	3 353	179		
Internal Ops	Inert	Landfill				80%	-	-	negligible	-									Assumed to be negligible for analysis.
Outbound Recyclables	Inert	Market/Reuse				100%	-	-	negligible	-									Assumed to be negligible for analysis.
Inbound Customers	Direct	HHW - Weekday	HHW Inbound Customers	1 185	0,736	100%	1 185	-	19 997	-	17 964	18	70	13	50	1 882	-		
Inbound Customers	Direct	HHW - Weekend	HHW Inbound Customers	1 185	0,736	100%	1 185	-	13 649	-	12 262	12	48	9	34	1 285	-		
Internal Ops	HHW	MRF				100%	-	-	negligible	-									Assumed to be negligible for analysis.
Outbound Recyclables	HHW	Contractor				100%	-	-	negligible	-									Assumed to be negligible for analysis.
Inbound Customers	Direct	Public - Self Haul to Public	Public Inbound Customers	1 185	0,736	100%	1 185	-	204 341	-	204 341	-	-	-	-	-	-		
Inbound Customers	Direct	Public - Self Haul to Compost	Public Self Haul Organics Only Inbound Customers	770	0,479	100%	770	-	52 287	-	52 287	-	-	-	-	-	-		
Internal Ops	Public	MRF	Public to MRF Internal Ops Vehicles After crossing is built	1 806	1,122	100%	1 806	-	2 432	-	-	-	3	-	23	1 554	853		
Internal Ops	Public	C&D	Public to CD Internal Ops Vehicles after crossing is built	1 081	0,672	90%	973	108	2 562	-	-	-	3	-	24	1 637	898		
Internal Ops	Public	Landfill	Public to Landfill Internal Ops Vehicles	3 553	2,208	80%	2 843	711	1 632	-	-	-	-	-	-	1 632	-		
Inbound Customers	Direct	Buyback - Public	Buyback Inbound Customers	1 185	0,736	100%	1 185	-	51 774	-	46 511	47	181	33	129	4 872	-		
Inbound Customers	Direct	Buyback - Commercial	Buyback Inbound Customers (Commercial)	524	0,326	100%	524	-	9 660	-	8 678	9	34	6	24	909	-		
Internal Ops	Buyback	MRF				100%	-	-	negligible	-									Assumed to be negligible for analysis.
Outbound Recyclables	Buyback	Market/Reuse				100%	-	-	negligible	-									Assumed to be negligible for analysis.
Inbound Customers	Direct	Landfill	Landfill Inbound Customers	2 526	1,569	80%	2 021	505	18 829	-	406	314	2 067	250	4 147	10 984	662		
Employees/Vendors	Direct	Compatible Manufacturing	Compatible Mfg Employees/Vendors	1 387	0,862	100%	1 387	-	2 249 520	574 320	1 123 340	29 570	101 620	9 680	118 760	265 280	26 950		

2050 Traffic - Plan Concept 2

Traffic Type	Route Start	Route End	Source Name	Road Length, One Way (meters)	Road Length, One Way (miles)	Percent Paved Road (%)	Paved Road Length (meters)	Unpaved Road Length (meters)	Annual Vehicle Qty	*LDA*	*LDT1 and LDT2*	*LHD1*	*LHD2*	*MDV*	*MHD small*	*MHD large*	*HHD*	*Vehicle Qty Check*	Notes
Inbound Customers	Direct	MRF	MRF Inbound Customers	814	0,506	100%	814	-	61 790	-	738	1 756	5 900	1 134	2 903	45 675	3 684		
Internal Ops	MRF	Landfill	MRF to Landfill Interal Ops Vehicles	1 330	0,827	80%	1 064	266	36 389	-	-	-	4	6	25	21 648	14 706		
Internal Ops	MRF	Inert	MRF to C&D/Inert Internal Ops Vehicles	792	0,492	90%	713	79	869	-	-	-	-	-	-	869	-		
Internal Ops	MRF	Compost	MRF to Compost Internal Ops Vehicles	1 099	0,683	90%	989	110	985	-	-	-	-	-	-	985	-		Assumed to be same vehicle type as MRF Inert.
Outbound Recyclables	MRF	Market/Reuse	MRF Outbound Recyclables	905	0,562	100%	905	-	5 426	-	2	-	20	28	42	1 549	3 785		
Inbound Customers	Direct	Compost	Compost Inbound Customers	754	0,469	100%	754	-	28 594	-	82	1 326	6 838	384	4 217	14 990	757		
Internal Ops	Compost	Landfill	Compost to Landfill Internal Ops Vehicles	1 459	0,907	80%	1 167	292	negligible	-									Assumed to be negligible for analysis.
Outbound Recyclables	Compost	Market/Reuse	Compost Outbound Material	816	0,507	100%	816	-	6 947	-	-	-	-	-	-	-	6 947		
Inbound Customers	Direct	C&D	C&D/Inert Inbound Customers	595	0,370	100%	595	-	61 856	-	1 426	4 594	22 695	1 270	21 418	9 221	1 232		
Internal Ops	C&D	Landfill	C&D/Inert to Landfill Internal Ops Vehicles	1 715	1,066	80%	1 372	343	7 113	-	-	-	1	1	5	4 232	2 875		
Outbound Recyclables	C&D	Market/Reuse				100%	-	-	negligible	-									Assumed to be negligible for analysis.
Inbound Customers	Direct	Inert	C&D/Inert Inbound Customers	595	0,370	100%	595	-	28 549	-	18 580	40	646	11	5 740	3 353	179		
Internal Ops	Inert	Landfill	C&D/Inert to Landfill Internal Ops Vehicles	1 715	1,066	80%	1 372	343	negligible	-									Assumed to be negligible for analysis.
Outbound Recyclables	Inert	Market/Reuse				100%	-	-	negligible	-									Assumed to be negligible for analysis.
Inbound Customers	Direct	HHW - Weekday	HHW Inbound Customers	912	0,567	100%	912	-	19 997	-	17 964	18	70	13	50	1 882	-		
Inbound Customers	Direct	HHW - Weekend	HHW Inbound Customers	912	0,567	100%	912	-	13 649	-	12 262	12	48	9	34	1 285	-		
Internal Ops	HHW	MRF				100%	-	-	negligible	-									Assumed to be negligible for analysis.
Outbound Recyclables	HHW	Contractor				100%	-	-	negligible	-									Assumed to be negligible for analysis.
Inbound Customers	Direct	Public - Self Haul to Public	Public (self haul non-organics) Inbound Customers	912	0,567	100%	912	-	204 341	-	204 341	-	-	-	-	-	-		
Inbound Customers	Direct	Public - Self Haul to Compost	Public (self haul organics) Inbound Customers	816	0,507	100%	816	-	52 287	-	52 287	-	-	-	-	-	-		
Internal Ops	Public	MRF	Public to MRF Internal Ops Vehicles	697	0,433	100%	697	-	2 432	-	-	-	3	-	23	1 554	853		
Internal Ops	Public	C&D	Public to C&D/Inert Internal Ops Vehicles	388	0,241	90%	349	39	2 562	-	-	-	3	-	24	1 637	898		
Internal Ops	Public	Landfill	Public to Landfill Internal Ops Vehicles	1 459	0,907	80%	1 167	292	1 632	-	-	-	-	-	-	1 632	-		
Inbound Customers	Direct	Buyback - Public	Buyback (public) Inbound Customers	912	0,567	100%	912	-	51 774	-	46 511	47	181	33	129	4 872	-		
Inbound Customers	Direct	Buyback - Commercial	Buyback (commercial) Inbound Customers	905	0,562	100%	905	-	9 660	-	8 678	9	34	6	24	909	-		
Internal Ops	Buyback	MRF				100%	-	-	negligible	-									Assumed to be negligible for analysis.
Outbound Recyclables	Buyback	Market/Reuse				100%	-	-	negligible	-									Assumed to be negligible for analysis.
Inbound Customers	Direct	Landfill	Landfill Inbound Customers	842	0,523	80%	674	168	18 829	-	406	314	2 067	250	4 147	10 984	662		
Employees/Vendors	Direct	Compatible Manufacturing	Compatible Manufacturing Employees/Vendors	744	0,462	100%	744	-	2 249 520	574 320	1 123 340	29 570	101 620	9 680	118 760	265 280	26 950		

Traffic Flow and Vehicle Quantities

Routes correspond with PDF maps located at \\sacfpp01\Proj\WPWMA\683386P2\EIR\06-AirQuality\Data\Traffic_Routes; Source names correspond with HRA Modeling Setup workbook (WPWMA_Setup.xlsx)

Vehicle counts and fleet mix from \\sacfpp01\Proj\WPWMA\683386P2\Material_Flow_Chart

2018 Traffic

Traffic Type	Route Start	Route End	Source Name	Road Length, One Way (meters)	Road Length, One Way (miles)	Percent Paved Road (%)	Paved Road Length, (meters)	Unpaved Road Length (meters)	Annual Vehicle Qty	LDA	LDT1 and LDT2	LHD1	LHD2	MDV	MHD small	MHD large	HHD
														Annual VMT (mi/yr)			
Inbound Customers	Direct	MRF		475	0,295152	100%	475	-	35 755	-	252	600	2 015	387	992	15 602	1 259
Internal Ops	MRF	Landfill		1490	0,9258454	80%	1 192	298	21 719	-	-	-	5	6	27	23 925	16 253
Internal Ops	MRF	Inert		955	0,593411	90%	860	96	461	-	-	-	-	-	-	547	-
Outbound Recyclables	MRF	Market/Reuse		545	0,3386481	100%	545	-	2 879	-	1	-	7	10	15	557	1 360
Inbound Customers	Direct	Compost		735	0,456709	100%	735	-	12 206	-	32	517	2 666	150	1 644	5 845	295
Internal Ops	Compost	Landfill				80%	-	-	negligible		-	-	-	-	-	-	-
Outbound Recyclables	Compost	Market/Reuse		490	0,3044726	100%	490	-	1 646	-	-	-	-	-	-	-	1 646
Inbound Customers	Direct	C&D		660	0,410106	100%	660	-	25 759	-	487	1 569	7 752	434	7 315	3 150	421
Internal Ops	C&D	Landfill		1150	0,7145786	80%	920	230	3 446	-	-	-	1	1	3	2 930	1 990
Outbound Recyclables	C&D	Market/Reuse		660	0,410106	100%	660	-	1 850	-	1	-	5	8	12	433	1 058
Inbound Customers	Direct	Inert		1045	0,6493345	100%	1 045	-	15 149	-	12 804	27	445	8	3 956	2 310	123
Internal Ops	Inert	Landfill				80%	-	-	negligible		-	-	-	-	-	-	-
Outbound Recyclables	Inert	Market/Reuse		1045	0,6493345	100%	1 045	-	negligible		-	-	-	-	-	-	-
Inbound Customers	Direct	HHW - Weekday		310	0,1926255	100%	310	-	10 611	-	3 672	4	14	3	10	385	-
Inbound Customers	Direct	HHW - Weekend		440	0,273404	100%	440	-	7 243	-	3 558	4	14	3	10	373	-
Internal Ops	HHW	MRF				100%	-	-	negligible		-	-	-	-	-	-	-
Outbound Recyclables	HHW	Contractor				100%	-	-	negligible		-	-	-	-	-	-	-
Inbound Customers	Direct	Public - Self Haul to Public		420	0,2609765	100%	420	-	108 430	-	56 595	-	-	-	-	-	-
Inbound Customers	Direct	Public - Self Haul to Compost		440	0,273404	100%	440	-	27 745	-	15 171	-	-	-	-	-	-
Internal Ops	Public	MRF		795	0,4939913	100%	795	-	1 290	-	-	-	1	-	12	814	447
Internal Ops	Public	C&D		945	0,5871972	90%	851	95	1 360	-	-	-	2	-	15	1 020	560
Internal Ops	Public	Landfill		1320	0,820212	80%	1 056	264	866	-	-	-	-	-	-	1 421	-
Inbound Customers	Direct	Buyback - Public		325	0,2019461	100%	325	-	27 473	-	9 968	10	39	7	28	1 044	-
Inbound Customers	Direct	Buyback - Commercial		550	0,341755	100%	550	-	5 126	-	3 148	3	12	2	9	330	-
Internal Ops	Buyback	MRF				100%	-	-	negligible		-	-	-	-	-	-	-
Outbound Recyclables	Buyback	Market/Reuse				100%	-	-	negligible		-	-	-	-	-	-	-
Inbound Customers	Direct	Landfill		1040	0,6462276	80%	832	208	17 055	-	476	367	2 419	292	4 854	12 859	775

2050 Traffic - Plan Concept 1

Traffic Type	Route Start	Route End	Source Name	Road Length, One Way (meters)	Road Length, One Way (miles)	Percent Paved Road (%)	Paved Road Length (meters)	Paved Road Length (mi)	Unpaved Road Length (meters)	Unpaved Road Length (mi)	Annual Vehicle Qty	Daily Peaking Factor	LDA	LDT1 and LDT2	LHD1	LHD2	MDV	MHD small	MHD large	HHD
Inbound Customers	Direct	MRF	MRF Inbound Customers	466	0,289502	100%	466	0,29	-	-	61 790	1,28265	-	175	417	1 401	269	689	10 844	875
Internal Ops	MRF	Landfill	MRF to Landfill Internal Ops Vehicles	3 342	2,076775	80%	2 674	1,66	668	0,42	36 389	1,28265	-	-	-	13	18	75	65 991	44 828
Internal Ops	MRF	Inert	MRF to Inert Internal Ops Vehicles	838	0,520412	90%	754	0,47	84	0,05	869	1,28265	-	-	-	-	-	-	357	-
Internal Ops	MRF	Compost	MRF to Compost Internal Ops Vehciles after crossing is built	654	0,406365	90%	589	0,37	65	0,04	985	1,28265	-	-	-	-	-	-	801	-
Outbound Recyclables	MRF	Market/Reuse	MRF Outbound Recyclabes	524	0,325899	100%	524	0,33	-	-	5 426	1,28265	-	1	-	6	8	12	453	1 107
Inbound Customers	Direct	Compost	Compost Inbound Customers	770	0,478658	100%	770	0,48	-	-	28 594	1,28265	-	47	752	3 880	218	2 393	8 506	429
Internal Ops	Compost	Landfill	Compost to landfill Internal Ops	3 251	2,020112	80%	2 601	1,62	650	0,40	negligible	1,28265	-							
Outbound Recyclables	Compost	Market/Reuse	Outbound Material	770	0,478658	100%	770	0,48	-	-	6 947	1,28265	-	-	-	-	-	-	-	5 004
Inbound Customers	Direct	C&D	CD Inert Inbound Customers	532	0,330320	100%	532	0,33	-	-	61 856	1,28265	-	455	1 466	7 241	405	6 834	2 942	393
Internal Ops	C&D	Landfill	CD Inert to Landfill Internal Ops Vehicles	2 559	1,590255	80%	2 047	1,27	512	0,32	7 113	1,28265	-	-	-	2	3	12	10 529	7 153
Outbound Recyclables	C&D	Market/Reuse	CD Inert Outbound Recylables	532	0,330320	100%	532	0,33	-	-	negligible	1,28265	-							
Inbound Customers	Direct	Inert	CD Inert Inbound Customers	532	0,330320	100%	532	0,33	-	-	28 549	1,28265	-	(529)	(1)	(18)	(0)	(163)	(95)	(5)
Internal Ops	Inert	Landfill				80%	-	-	-	-	negligible	1,28265	-							
Outbound Recyclables	Inert	Market/Reuse				100%	-	-	-	-	negligible	1,28265	-							
Inbound Customers	Direct	HHW - Weekday	HHW Inbound Customers	1 185	0,736041	100%	1 185	0,74	-	-	19 997	1,28265	-	22 773	23	89	16	63	2 386	-
Inbound Customers	Direct	HHW - Weekend	HHW Inbound Customers	1 185	0,736041	100%	1 185	0,74	-	-	13 649	1,28265	-	14 493	15	57	10	40	1 518	-
Internal Ops	HHW	MRF				100%	-	-	-	-	negligible	1,28265	-							
Outbound Recyclables	HHW	Contractor				100%	-	-	-	-	negligible	1,28265	-							
Inbound Customers	Direct	Public - Self Haul to Public	Public Inbound Customers	1 185	0,736041	100%	1 185	0,74	-	-	204 341	1,28265	-	244 211	-	-	-	-	-	-
Inbound Customers	Direct	Public - Self Haul to Compost	Public Self Haul Organics Only Inbound Customers	770	0,478658	100%	770	0,48	-	-	52 287	1,28265	-	34 884	-	-	-	-	-	-
Internal Ops	Public	MRF	Public to MRF Internal Ops Vehicles After crossing is built	1 806	1,121928	100%	1 806	1,12	-	-	2 432	1,28265	-	-	-	5	-	39	2 672	1 466
Internal Ops	Public	C&D	Public to CD Internal Ops Vehicles after crossing is built	1 081	0,671720	90%	973	0,60	108	0,07	2 562	1,28265	-	-	-	2	-	17	1 179	647
Internal Ops	Public	Landfill	Public to Landfill Internal Ops Vehicles	3 553	2,208023	80%	2 843	1,77	711	0,44	1 632	1,28265	-	-	-	-	-	-	5 786	-
Inbound Customers	Direct	Buyback - Public	Buyback Inbound Customers	1 185	0,736041	100%	1 185	0,74	-	-	51 774	1,28265	-	58 500	59	228	41	162	6 128	-
Inbound Customers	Direct	Buyback - Commercial	Buyback Inbound Customers (Commercial)	524	0,325899	100%	524	0,33	-	-	9 660	1,28265	-	2 509	3	10	2	7	263	-
Internal Ops	Buyback	MRF				100%	-	-	-	-	negligible	1,28265	-	-	-	-	-	-	-	-
Outbound Recyclables	Buyback	Market/Reuse				100%	-	-	-	-	negligible	1,28265	-	-	-	-	-	-	-	-
Inbound Customers	Direct	Landfill	Landfill Inbound Customers	2 526	1,569427	80%	2 021	1,26	505	0,31	18 829	1,28265	-	800	617	4 068	491	8 161	21 618	1 304
Employees					10,8			-		-		1,28265				1 080				
Offsite Vehicles		65 Foothills	Comes off of 65 to Foothills		9,60			-		-		1,28265		1 075 333	26 927	128 058	9 437	121 948	252 451	17 984
Offsite Vehicles	Industrial	Athens	Comes off of Industrial to Athens		0,55			-		-		1,28265		8 346	209	994	73	946	1 959	140
Offsite Vehicles	Northbound	Fiddyment	Northbound Fiddyment		1,57			-		-		1,28265		45 237	1 133	5 387	397	5 130	10 620	757
Offsite Vehicles	Southbound	Fiddyment	Southbound Fiddyment		0,52			-		-		1,28265		7 536	189	897	66	855	1 769	126
Offsite Recycle Vehicles	Industrial	Athens	Comes off of Industrial to Athens		5,21			-		-		1,28265		1	-	7	9	14	518	12 321
Offsite Recycle Vehicles		65 Foothills	Comes off of 65 to Foothills		95,58			-		-		1,28265		14,09	-	119,78	169,10	260,70	9 511,85	226 041,46

Traffic Type	Daily Vehicle Exhaust Emissions VOC	CO	NOx	SO2	PM10	PM10	PM2.5	Annual Vehicle Exhaust Emissions CO2	CH4	N2O	CO2e	DPM	Paved Road Fugitive Dust PM10	PM2.5	Unpaved Road Fugitive Dust PM10	PM2.5
			(lb/day)					(lb/yr)						lb/yr		
Inbound Customers	0,01	0,05	0,38	0,00	0,01	2,43	0,18	36 096,32	0,08	5,65	1,92	0,19	2 462,09	604,33	-	-
Internal Ops	0,02	0,36	4,23	0,01	0,09	24,24	1,17	339 273,73	0,32	53,33	7,78	1,22	14 893,00	3 655,56	8 112,48	811,25
Internal Ops	0,00	0,00	0,01	0,00	0,00	0,05	0,00	932,45	0,00	0,15	0,02	0,00	53,94	13,24	13,06	1,31
Internal Ops	0,00	0,00	0,02	0,00	0,00	0,11	0,01	2 090,26	0,00	0,33	0,04	0,01	120,92	29,68	29,27	2,93
Outbound Recyclables	0,00	0,01	0,07	0,00	0,00	0,44	0,02	5 347,92	0,01	0,84	0,14	0,02	266,28	65,36	-	-
Inbound Customers	0,01	0,07	0,35	0,00	0,01	2,95	0,30	36 287,46	0,16	5,70	3,81	0,31	2 722,88	668,34	-	-
Internal Ops	-	-	-	-	-	-	-	-	-	-	-	-	-	-	-	-
Outbound Recyclables	0,00	0,03	0,26	0,00	0,01	1,66	0,08	18 612,13	0,02	2,93	0,53	0,08	839,81	206,14	-	-
Inbound Customers	0,02	0,12	0,32	0,00	0,01	3,91	0,48	38 976,82	0,27	6,08	6,63	0,50	3 312,36	813,03	-	-
Internal Ops	0,00	0,06	0,68	0,00	0,01	3,87	0,19	54 134,45	0,05	8,51	1,24	0,19	2 376,32	583,28	1 294,43	129,44
Outbound Recyclables	-	-	-	-	-	-	-	-	-	-	-	-	-	-	-	-
Inbound Customers	(0,00)	(0,00)	(0,01)	(0,00)	(0,00)	(0,07)	(0,00)	(1 128,24)	(0,00)	(0,12)	(0,04)	(0,00)	(136,44)	(33,49)	-	-
Internal Ops	-	-	-	-	-	-	-	-	-	-	-	-	-	-	-	-
Outbound Recyclables	-	-	-	-	-	-	-	-	-	-	-	-	-	-	-	-
Inbound Customers	0,00	0,12	0,08	0,00	0,00	1,34	0,09	24 084,17	0,11	1,25	0,61	0,10	4 254,33	1 044,25	-	-
Inbound Customers	0,00	0,08	0,05	0,00	0,00	0,85	0,06	15 327,41	0,07	0,80	0,39	0,06	2 707,50	664,57	-	-
Internal Ops	-	-	-	-	-	-	-	-	-	-	-	-	-	-	-	-
Outbound Recyclables	-	-	-	-	-	-	-	-	-	-	-	-	-	-	-	-
Inbound Customers	0,01	1,21	0,05	0,01	0,04	10,35	0,72	187 995,40	1,10	2,37	4,48	0,78	40 985,26	10 060,02	-	-
Inbound Customers	0,00	0,17	0,01	0,00	0,01	1,48	0,10	26 853,66	0,16	0,34	0,64	0,11	5 854,42	1 436,99	-	-
Internal Ops	0,00	0,01	0,15	0,00	0,00	0,87	0,04	12 537,70	0,01	1,97	0,28	0,04	701,82	172,26	-	-
Internal Ops	0,00	0,01	0,07	0,00	0,00	0,38	0,02	5 532,99	0,01	0,87	0,12	0,02	278,75	68,42	67,48	6,75
Internal Ops	0,00	0,01	0,17	0,00	0,00	0,82	0,04	15 108,79	0,01	2,37	0,27	0,04	776,90	190,69	423,19	42,32
Inbound Customers	0,00	0,31	0,20	0,00	0,01	3,45	0,23	61 869,02	0,28	3,21	1,57	0,25	10 928,81	2 682,53	-	-
Inbound Customers	0,00	0,01	0,01	0,00	0,00	0,15	0,01	2 653,39	0,01	0,14	0,07	0,01	468,71	115,05	-	-
Internal Ops	-	-	-	-	-	-	-	-	-	-	-	-	-	-	-	-
Outbound Recyclables	-	-	-	-	-	-	-	-	-	-	-	-	-	-	-	-
Inbound Customers	0,01	0,12	0,94	0,00	0,02	5,98	0,46	89 781,76	0,20	14,02	4,84	0,48	4 975,56	1 221,27	2 710,27	271,03
Onsite Roads	**0,10**	**2,75**	**8,03**	**0,03**	**0,23**	**65,27**	**4,18**	**972 367,62**	**2,86**	**110,74**	**35,33**	**4,42**	**98 843,23**	**24 261,52**	**12 650,18**	**1 265,02**
Employees	0,00	0,01	0,00	0,00	0,00	0,30	0,06	1 425,08	0,03	0,22	0,76	0,06	0,71	0,18	-	-
Offsite Vehicles	0,44	7,86	12,28	0,07	0,52	146,85	13,29	2 081 485,87	10,08	207,51	148,13	14,03	1 078,94	264,83	-	-
Offsite Vehicles	0,00	0,06	0,10	0,00	0,00	1,14	0,10	16 154,35	0,08	1,61	1,15	0,11	8,37	2,06	-	-
Offsite Vehicles	0,02	0,33	0,52	0,00	0,02	6,18	0,56	87 563,52	0,42	8,73	6,23	0,59	45,39	11,14	-	-
Offsite Vehicles	0,00	0,06	0,09	0,00	0,00	1,03	0,09	14 586,77	0,07	1,45	1,04	0,10	7,56	1,86	-	-
Offsite Recycle Vehicles	0,00	0,06	0,65	0,00	0,01	4,17	0,20	47 237,63	0,05	7,43	1,33	0,20	8,51	2,09	-	-
Offsite Recycle Vehicles	0,08	1,17	11,91	0,03	0,27	76,48	3,59	866 597,37	1,00	136,22	24,45	3,76	156,09	38,31	-	-
Offsite Roads	**0,55**	**9,55**	**25,54**	**0,10**	**0,83**	**236,15**	**17,89**	**3 115 050,59**	**11,74**	**363,17**	**183,10**	**18,84**	**1 305,57**	**320,46**	**-**	**-**

2050 Traffic - Plan Concept 2

																			Daily Vehicle Exhaust Emissions					Annual Vehicle Exhaust Emissions							Paved Road Fugitive Dust		Unpaved Road Fugitive Dust	
Traffic Type	Route Start	Route End	Source Name	Road Length, One Way (meters)	Road Length, One Way (miles)	Percent Paved Road (%)	Paved Road Length (meters)	Unpaved Road Length (meters)	Annual Vehicle Qty	Daily Peaking Factor	*LDA*	*LDT1 and LDT2*	*LHD1*	*LHD2*	*MDV*	*MHD small*	*MHD large*	*HHD*	VOC	CO	NOx	SO2	PM10	PM10	PM2.5	CO2	CH4	N2O	CO2e	DPM	PM10	PM2.5	PM10	PM2.5
																					(lb/day)					(lb/yr)					lb/yr			
Inbound Customers	Direct	MRF	MRF Inbound Customers	814	0,505823	100%	814	-	61 790	1,28265	-	494	1 176	3 953	760	1 945	30 605	2 469	0,02	0,14	1,08	0,00	0,02	6,85	0,50	101 872,35	0,22	15,96	5,42	0,52	6 948,59	1 705,56	-	-
Internal Ops	MRF	Landfill	MRF to Landfill Internal Ops Vehicles	1 330	0,826697	80%	1 064	266	36 389	1,28265	-	-	-	2	3	13	11 867	8 062	0,00	0,07	0,76	0,00	0,02	4,36	0,21	61 013,04	0,06	9,59	1,40	0,22	2 678,27	657,39	1 458,90	145,89
Internal Ops	MRF	Inert	MRF to C&D/Inert Internal Ops Vehicles	792	0,491944	90%	713	79	869	1,28265	-	-	-	-	-	-	308	-	0,00	0,00	0,01	0,00	0,00	0,04	0,00	803,30	0,00	0,13	0,01	0,00	46,47	11,41	11,25	1,12
Internal Ops	MRF	Compost	MRF to Compost Internal Ops Vehicles	1 099	0,683078	90%	989	110	985	1,28265	-	-	-	-	-	-	1 346	-	0,00	0,00	0,04	0,00	0,00	0,19	0,01	3 513,62	0,00	0,55	0,06	0,01	203,25	49,89	49,21	4,92
Outbound Recyclables	MRF	Market/Reuse	MRF Outbound Recyclables	905	0,562252	100%	905	-	5 426	1,28265	-	2	-	15	21	32	1 185	2 896	0,00	0,02	0,18	0,00	0,00	1,14	0,05	13 993,53	0,02	2,20	0,37	0,06	696,76	171,02	-	-
Inbound Customers	Direct	Compost	Compost Inbound Customers	754	0,468742	100%	754	-	28 594	1,28265	-	45	726	3 744	210	2 309	8 208	414	0,01	0,07	0,33	0,00	0,01	2,85	0,29	35 019,08	0,15	5,50	3,68	0,30	2 627,71	644,98	-	-
Internal Ops	Compost	Landfill	Compost to Landfill Internal Ops Vehicles	1 459	0,906579	80%	1 167	292	negligible	1,28265	-	-	-	-	-	-	-	-	-	-	-	-	-	-	-	-	-	-	-	-	-	-	-	-
Outbound Recyclables	Compost	Market/Reuse	Compost Outbound Material	816	0,506742	100%	816	-	6 947	1,28265	-	-	-	-	-	-	-	5 394	0,00	0,03	0,28	0,00	0,01	1,79	0,08	20 063,35	0,02	3,15	0,57	0,09	905,29	222,21	-	-
Inbound Customers	Direct	C&D	C&D/Inert Inbound Customers	595	0,369595	100%	595	-	61 856	1,28265	-	567	1 827	9 024	505	8 516	3 667	490	0,03	0,15	0,40	0,00	0,02	4,87	0,60	48 572,06	0,34	7,57	8,26	0,63	4 127,80	1 013,19	-	-
Internal Ops	C&D	Landfill	C&D/Inert to Landfill Internal Ops Vehicles	1 715	1,065838	80%	1 372	343	7 113	1,28265	-	-	-	1	2	7	6 091	4 138	0,00	0,03	0,39	0,00	0,01	2,24	0,11	31 314,84	0,03	4,92	0,72	0,11	1 374,62	337,41	748,78	74,88
Outbound Recyclables	C&D	Market/Reuse				100%	-	-	negligible	1,28265	-								-	-	-	-	-	-	-	-	-	-	-	-	-	-	-	-
Inbound Customers	Direct	Inert	C&D/Inert Inbound Customers	595	0,369595	100%	595	-	28 549	1,28265	-	930	2	32	1	287	168	9	0,00	0,01	0,01	0,00	0,00	0,12	0,01	1 983,93	0,01	0,21	0,06	0,01	239,92	58,89	-	-
Internal Ops	Inert	Landfill	C&D/Inert to Landfill Internal Ops Vehicles	1 715	1,065838	80%	1 372	343	negligible	1,28265	-	-	-	-	-	-	-	-	-	-	-	-	-	-	-	-	-	-	-	-	-	-	-	-
Outbound Recyclables	Inert	Market/Reuse				100%	-	-	negligible	1,28265	-	-	-	-	-	-	-	-	-	-	-	-	-	-	-	-	-	-	-	-	-	-	-	-
Inbound Customers	Direct	HHW - Weekday	HHW Inbound Customers	912	0,566610	100%	912	-	19 997	1,28265	-	16 685	17	65	12	46	1 748	-	0,00	0,09	0,06	0,00	0,00	0,98	0,07	17 646,13	0,08	0,92	0,45	0,07	3 117,09	765,10	-	-
Inbound Customers	Direct	HHW - Weekend	HHW Inbound Customers	912	0,566610	100%	912	-	13 649	1,28265	-	10 338	10	40	7	29	1 083	-	0,00	0,05	0,03	0,00	0,00	0,61	0,04	10 933,00	0,05	0,57	0,28	0,04	1 931,25	474,03	-	-
Internal Ops	HHW	MRF				100%	-	-	negligible	1,28265	-	-	-	-	-	-	-	-	-	-	-	-	-	-	-	-	-	-	-	-	-	-	-	-
Outbound Recyclables	HHW	Contractor				100%	-	-	negligible	1,28265	-	-	-	-	-	-	-	-	-	-	-	-	-	-	-	-	-	-	-	-	-	-	-	-
Inbound Customers	Direct	Public - Self Haul to Public	Public (self haul non-organics) Inbound Customers	912	0,566610	100%	912	-	204 341	1,28265	-	174 968	-	-	-	-	-	-	0,01	0,87	0,04	0,00	0,03	7,42	0,52	134 691,36	0,79	1,70	3,21	0,56	29 364,33	7 207,61	-	-
Inbound Customers	Direct	Public - Self Haul to Compost	Public (self haul organics) Inbound Customers	816	0,506742	100%	816	-	52 287	1,28265	-	37 820	-	-	-	-	-	-	0,00	0,19	0,01	0,00	0,01	1,60	0,11	29 114,46	0,17	0,37	0,69	0,12	6 347,30	1 557,97	-	-
Internal Ops	Public	MRF	Public to MRF Internal Ops Vehicles	697	0,433372	100%	697	-	2 432	1,28265	-	-	-	1	-	8	532	292	0,00	0,00	0,03	0,00	0,00	0,17	0,01	2 497,10	0,00	0,39	0,06	0,01	139,78	34,31	-	-
Internal Ops	Public	C&D	Public to C&D/Inert Internal Ops Vehicles	388	0,240804	90%	349	39	2 562	1,28265	-	-	-	(0)	-	(3)	(232)	(127)	(0,00)	(0,00)	(0,01)	(0,00)	(0,00)	(0,08)	(0,00)	(1 087,49)	(0,00)	(0,17)	(0,02)	(0,00)	(54,79)	(13,45)	(13,26)	(1,33)
Internal Ops	Public	Landfill	Public to Landfill Internal Ops Vehicles	1 459	0,906579	80%	1 167	292	1 632	1,28265	-	-	-	-	-	-	1 538	-	0,00	0,00	0,04	0,00	0,00	0,22	0,01	4 017,10	0,00	0,63	0,07	0,01	206,56	50,70	112,52	11,25
Inbound Customers	Direct	Buyback - Public	Buyback (public) Inbound Customers	912	0,566610	100%	912	-	51 774	1,28265	-	42 739	43	167	30	119	4 477	-	0,00	0,22	0,14	0,00	0,01	2,52	0,17	45 200,49	0,21	2,35	1,14	0,18	7 984,41	1 959,81	-	-
Inbound Customers	Direct	Buyback - Commercial	Buyback (commercial) Inbound Customers	905	0,562252	100%	905	-	9 660	1,28265	-	6 611	7	26	5	18	693	-	0,00	0,03	0,02	0,00	0,00	0,39	0,03	6 991,87	0,03	0,36	0,18	0,03	1 235,07	303,15	-	-
Internal Ops	Buyback	MRF				100%	-	-	negligible	1,28265	-	-	-	-	-	-	-	-	-	-	-	-	-	-	-	-	-	-	-	-	-	-	-	-
Outbound Recyclables	Buyback	Market/Reuse				100%	-	-	negligible	1,28265	-	-	-	-	-	-	-	-	-	-	-	-	-	-	-	-	-	-	-	-	-	-	-	-
Inbound Customers	Direct	Landfill	Landfill Inbound Customers	842	0,523136	80%	674	168	18 829	1,28265	-	(51)	(39)	(257)	(31)	(516)	(1 367)	(82)	(0,00)	(0,01)	(0,06)	(0,00)	(0,00)	(0,38)	(0,03)	(5 675,35)	(0,01)	(0,89)	(0,31)	(0,03)	(314,52)	(77,20)	(171,32)	(17,13)
																		Onsite Roads	**0,08**	**1,96**	**3,79**	**0,02**	**0,13**	**37,91**	**2,78**	**562 477,77**	**2,17**	**56,01**	**26,30**	**2,94**	**69 805,18**	**17 134,00**	**2 196,07**	**219,61**
Employees					10,8					1,28265				1 080					0,00	0,01	0,00	0,00	0,00	0,30	0,06	1 425,08	0,03	0,22	0,76	0,06	0,71	0,18	-	-
Offsite Vehicles	65	Foothills	Comes off of 65 to Foothills		9,60					1,28265		1 075 333	26 927	128 058	9 437	121 948	252 451	17 984	0,44	7,86	12,28	0,07	0,52	146,85	13,29	2 081 485,87	10,08	207,51	148,13	14,03	1 078,94	264,83	-	-
Offsite Vehicles	Industrial	Athens	Comes off of Industrial to Athens		0,55					1,28265		8 346	209	994	73	946	1 959	140	0,00	0,06	0,10	0,00	0,00	1,14	0,10	16 154,35	0,08	1,61	1,15	0,11	8,37	2,06	-	-
Offsite Vehicles	Northbound	Fiddyment	Northbound Fiddyment		1,57					1,28265		45 237	1 133	5 387	397	5 130	10 620	757	0,02	0,33	0,52	0,00	0,02	6,18	0,56	87 563,52	0,42	8,73	6,23	0,59	45,39	11,14	-	-
Offsite Vehicles	Southbound	Fiddyment	Southbound Fiddyment		0,52					1,28265		7 536	189	897	66	855	1 769	126	0,00	0,06	0,09	0,00	0,00	1,03	0,09	14 586,77	0,07	1,45	1,04	0,10	7,56	1,86	-	-
Offsite Recycle Vehicles	Industrial	Athens	Comes off of Industrial to Athens		5,21					1,28265		1	-	7	9	14	518	12 321	0,00	0,06	0,65	0,00	0,01	4,17	0,20	47 237,63	0,05	7,43	1,33	0,20	8,51	2,09	-	-
Offsite Recycle Vehicles	65	Foothills	Comes off of 65 to Foothills		95,58					1,28265		14,09	-	119,78	169,10	260,70	9 511,85	226 041,46	0,08	1,17	11,91	0,03	0,27	76,48	3,59	866 597,37	1,00	136,22	24,45	3,76	156,09	38,31	-	-
																		Offsite Roads	**0,55**	**9,55**	**25,54**	**0,10**	**0,83**	**236,15**	**17,89**	**3 115 050,59**	**11,74**	**363,17**	**183,10**	**18,84**	**1 305,57**	**320,46**	**-**	**-**

Fugitive Dust Emission Factors

Vehicle Travel on Paved Surfaces (Road Dust)

Emission Factor calculated as follows, per Equation 1 from Section 13.2.1 of *AP-42* (U.S. EPA, 2011), which is generally consistent with Section 5.3 of Appendix A of the *CalEEMod User's Guide* (Breeze Software, 2017):

Emission Factor (lb/VMT) = k (lb/VMT) x [sL (g/m^2)]$^{0.91}$ x [W (tons)]$^{1.02}$

Pollutant	Size Multiplier, lb/VMT) [a]	sL (Road Surface Silt Loading, g/m^2) [b,c]	W (Mean Vehicle Weight, tons) [b,c]	Emission Factor (lb/VMT)
Onsite Paved Road PM_{10}	0,0022	7,4	11,75	0,168
Onsite Paved Road $PM_{2.5}$	0,00054	7,4	11,75	0,041
Offsite Paved Road PM_{10}	0,0022	0,1	2,4	0,001
Offsite Paved Road $PM_{2.5}$	0,00054	0,1	2,4	0,000

Notes:

[a] Particle Size Multiplier (k) taken from Table 13.2.1-1 of Section 13.2.1 of *AP-42* (U.S. EPA, 2011).

[b] Mean Vehicle Weight (W) and Road Surface Silt Loading (sL) taken from Section 5.3 of Appendix A of the *CalEEMod User's Guide* .

[c] Mean Vehicle Weight (W) assumes that heavy- and light-duty trucks weigh an average of 16.5 tons and Road Surface Silt Loading (sL) average value taken from Table 13.2.1-3 for Municipal solid waste landfills.

Vehicle Travel on Unpaved Surfaces (Road Dust)

Emission Factor calculated as follows, per Equations 1a and 2 from Section 13.2.2 of *AP-42* (U.S. EPA, 2006):

Emission Factor (lb/VMT) = {k (lb/VMT) x [s (%) / 12]^a x [W (tons) / 3]^b} x [(365-P) / 365]

Pollutant	k (Particle Size Multiplier, lb/VMT) [a]	s (Silt Content, %) [b]	W (Mean Vehicle Weight, tons) [c]	P (Days of Precipitation > 0.01") [d]	a (Constant) [a]	b (Constant) [a]	Emission Factor (lb/VMT)	Reduction From Watering 2x Daily (%) [e]		Controlled Emission Factor (lb/VMT)
Unpaved Road PM_{10}	1,5	6,4	16,5	74	0,9	0,45	1,463	75%		0,366
Unpaved Road $PM_{2.5}$	0,15	6,4	16,5	74	0,9	0,45	0,146	75%		0,037

Notes:

[a] Particle Size Multplier (k) and Constants (a and b) taken from Table 13.2.2-2 of Section 13.2.2 of *AP-42* (U.S. EPA, 2006) for industrial roads.

[b] Silt Content (s) taken from Table 13.2.2-1 of Section 13.2.2 of *AP-42* (U.S. EPA, 2006) Mean value for municipal solid waste landfills.

[c] Mean Vehicle Weight (W) assumes that heavy- and light-duty trucks weigh an average of 16.5 tons.

[d] Days of precipitation greater than 0.01 inch (P) taken as the CalEEMod default for the climate region of Placer County APCD.

[e] Percent reduction from watering three times daily per Sacramento Metropolitan Air Quality Management District (SMAQMD). 2015. CEQA Guide. June.

EMFAC2017 (v1.0.2) Emission Rates
Region Type: Air District
Region: PLACER COUNTY APCD
Calendar Year: 2050
Season: Annual
Vehicle Classification: EMFAC2007 Categories
Units: miles/day for VMT, g/mile for RUNEX, PMBW and PMTW. Note 'day' in the unit is operation day.

Offsite Emission Factors - 2050

Region	Calendar Year	Vehicle Category	Model Year	Speed	Fuel	VMT	ROG_RUNEX	CO_RUNEX	NOx_RUNEX	SOx_RUNEX	PM10_RUNEX	PM2.5_RUNEX	CO2_RUNEX	CH4_RUNEX	N2O_RUNEX	TOG_RUNEX	PM10_PMTW	PM10_PMBW
PLACER COUNTY APCD	2050	LDA	Aggregated	40	GAS	992 843,44	0,001336868	0,39159642	0,016799572	0,001717521	0,000408512	0,000375612	173,56042	0,000491635	0,002844206	0,001950755	0,007999995	0,008195423
PLACER COUNTY APCD	2050	LDT1	Aggregated	40	GAS	144 217,29	0,001398398	0,394271184	0,018078971	0,001969021	0,000418945	0,000385205	198,975183	0,000513107	0,002987367	0,002040538	0,007999996	0,009798319
PLACER COUNTY APCD	2050	LDT2	Aggregated	40	GAS	463 710,94	0,001896964	0,451383996	0,016895398	0,001951342	0,000414892	0,000381478	197,188682	0,000670069	0,002854098	0,002768045	0,007999996	0,009748071
		LDT1 / LDT2	Average				0,001647681	0,42282759	0,017487185	0,001960181	0,000416919	0,000383341	198,0819325	0,000591588	0,002920732	0,002404292	0,007999996	0,009773195
PLACER COUNTY APCD	2050	LHDT1	Aggregated	40	DSL	5 730,52	0,032303998	0,151548407	0,055283314	0,003287973	0,005366989	0,005134816	347,8012926	0,001500459	0,05466952	0,036775954	0,012000003	0,078000022
PLACER COUNTY APCD	2050	LHDT2	Aggregated	40	DSL	2 293,47	0,033432313	0,161435076	0,103479286	0,003736914	0,013007867	0,012445153	395,2901872	0,001552867	0,062134113	0,038060466	0,012000003	0,091000026
PLACER COUNTY APCD	2050	MDV	Aggregated	40	DSL	9 509,45	0,003767999	0,124978993	0,008507501	0,002175659	0,000802969	0,000768233	230,1408575	0,000175016	0,036174938	0,004289616	0,007999996	0,009978976
PLACER COUNTY APCD	2050	MHDT	Aggregated	40	DSL	25 367,61	0,005559728	0,05843265	0,890703821	0,006018994	0,004563836	0,004366407	637,0988155	0,000258235	0,100143062	0,006329327	0,016000005	0,044841778
PLACER COUNTY APCD	2050	HHDT	Aggregated	40	DSL	16761,34729	0,012851365	0,144597798	1,583428336	0,008678071	0,010004733	0,009571933	918,5570233	0,000596913	0,144384372	0,014630301	0,03600001	0,107228848

EMFAC2017 (v1.0.2) Emission Rates
Region Type: Air District
Region: PLACER COUNTY APCD
Calendar Year: 2050
Season: Annual
Vehicle Classification: EMFAC2007 Categories
Units: miles/day for VMT, g/mile for RUNEX, PMBW and PMTW. Note 'day' in the unit is operation day.

Onsite Emission Factors - 2050

Region	Calendar Yea	Vehicle Categ	Model Year	Speed	Fuel	VMT	ROG_RUNEX	CO_RUNEX	NOx_RUNEX	SOx_RUNEX	PM10_RUNEX	PM2.5_RUNEX	CO2_RUNEX	CH4_RUNEX	N2O_RUNEX	TOG_RUNEX	PM10_PMTW	PM10_PMBW
PLACER COUNTY APCD	2050	LDA	Aggregated	15	GAS	41589,77007	0,004631644	0,591933238	0,025919383	0,003020579	0,001427803	0,001312813	305,2381994	0,001700882	0,004348355	0,006758484	0,007999995	0,008195423
PLACER COUNTY APCD	2050	LDT1	Aggregated	15	GAS	5568,226317	0,004837493	0,59672022	0,027455717	0,003469798	0,001460699	0,001343059	350,6330517	0,001772002	0,004511307	0,007058858	0,007999996	0,009798319
PLACER COUNTY APCD	2050	LDT2	Aggregated	15	GAS	17859,59964	0,006561991	0,68324225	0,025595099	0,003441005	0,001445978	0,001329524	347,7233768	0,002313157	0,004301616	0,009575242	0,007999996	0,009748071
		LDT1 / LDT2	Average				0,005699742	0,639981235	0,026525408	0,003455401	0,001453339	0,001336291	349,1782142	0,002042579	0,004406461	0,00831705	0,007999996	0,009773195
PLACER COUNTY APCD	2050	LHDT1	Aggregated	15	DSL	19970,57806	0,277130885	1,293813696	0,137827365	0,004924378	0,010037694	0,009603468	520,8999592	0,0128722	0,08187822	0,315495087	0,012000003	0,078000022
PLACER COUNTY APCD	2050	LHDT2	Aggregated	15	DSL	7992,626865	0,279601631	1,326574061	0,182742983	0,005658186	0,024415185	0,023358995	598,5221215	0,012986961	0,094079343	0,318307868	0,012000003	0,091000026
PLACER COUNTY APCD	2050	MDV	Aggregated	15	DSL	375,8397712	0,032635681	1,080660394	0,026331021	0,004232407	0,001524443	0,001458496	447,7034272	0,001515865	0,070372744	0,037153553	0,007999996	0,009978976
PLACER COUNTY APCD	2050	MHDT	Aggregated	15	DSL	20237,4656	0,018250142	0,264608439	3,765767498	0,011189254	0,003351955	0,003206951	1184,360824	0,000847672	0,186165028	0,020776398	0,016000005	0,044841778
PLACER COUNTY APCD	2050	HHDT	Aggregated	15	DSL	13305,43799	0,042140679	0,65567743	6,64046455	0,015938907	0,007378502	0,007059311	1687,102427	0,001957325	0,265189007	0,047973955	0,03600001	0,107228848

EMFAC2017 (v1.0.2) Emission Rates
Region Type: Air District
Region: PLACER COUNTY APCD
Calendar Year: 2018
Season: Annual
Vehicle Classification: EMFAC2007 Categories
Units: miles/day for VMT, g/mile for RUNEX, PMBW and PMTW. Note 'day' in the unit is operation day.

Onsite Emission Factors - 2018

Region	Calendar Yea	Vehicle Categ	Model Year	Speed	Fuel	VMT	ROG_RUNEX	CO_RUNEX	NOx_RUNEX	SOx_RUNEX	PM10_RUNEX	PM2.5_RUNEX	CO2_RUNEX	CH4_RUNEX	N2O_RUNEX	TOG_RUNEX
PLACER COUNTY APCD	2018	LDA	Aggregated	15	GAS	22091,81743	0,072126325	1,917143167	0,130475699	0,004640921	0,004952875	0,004555647	468,9783897	0,015863479	0,011078815	0,103161207
PLACER COUNTY APCD	2018	LDT1	Aggregated	15	GAS	3415,56416	0,139595295	3,521075366	0,288225288	0,00535731	0,007345384	0,006757216	541,371475	0,028748579	0,019043786	0,199222872
PLACER COUNTY APCD	2018	LDT2	Aggregated	15	GAS	13687,06703	0,080326804	2,202082988	0,227016205	0,005970483	0,004555966	0,004190088	603,3343686	0,017959459	0,015675028	0,115761383
PLACER COUNTY APCD	2018	LHDT1	Aggregated	15	DSL	29870,61161	0,359483958	1,484306759	3,405390303	0,006702449	0,058638605	0,056101925	708,9840403	0,016697343	0,111442418	0,409248586
PLACER COUNTY APCD	2018	LHDT2	Aggregated	15	DSL	9320,016251	0,317214651	1,294483662	2,224935266	0,007583074	0,04298661	0,041127029	802,1364454	0,014734014	0,126084679	0,361127791
PLACER COUNTY APCD	2018	MDV	Aggregated	15	DSL	287,8198988	0,081782729	1,366500923	0,144055931	0,00671124	0,014175662	0,013562429	709,9139509	0,003798651	0,111588587	0,0931042
PLACER COUNTY APCD	2018	MHDT	Aggregated	15	DSL	6429,344843	0,768896813	1,555578207	6,43770497	0,015610133	0,193251912	0,18489192	1652,302315	0,035713265	0,259718914	0,875330492
PLACER COUNTY APCD	2018	HHDT	Aggregated	15	DSL	8053,646763	0,661810537	1,8517598	9,736199811	0,024868944	0,122047613	0,116767887	2632,329496	0,030739385	0,413765539	0,753420919

EMFAC2017 (v1.0.2) Emission Rates
Region Type: Air District
Region: PLACER COUNTY APCD
Calendar Year: 2018
Season: Annual
Vehicle Classification: EMFAC2007 Categories
Units: miles/day for VMT, g/mile for RUNEX, PMBW and PMTW. Note 'day' in the unit is operation day.

Offsite Emission Factors - 2018

Region	Calendar Yea	Vehicle Categ	Model Year	Speed	Fuel	VMT	ROG_RUNEX	CO_RUNEX	NOx_RUNEX	SOx_RUNEX	PM10_RUNEX	PM2.5_RUNEX	CO2_RUNEX	CH4_RUNEX	N2O_RUNEX	TOG_RUNEX
PLACER COUNTY APCD	2018	LDA	Aggregated	40	GAS	662691,1313	0,015811806	0,983402776	0,067480427	0,002615459	0,001296869	0,001192818	264,2996315	0,003640166	0,006293692	0,022627986
PLACER COUNTY APCD	2018	LDT1	Aggregated	40	GAS	91457,91841	0,032056342	1,602356486	0,135621383	0,002996489	0,001902649	0,001750323	302,8037522	0,006791316	0,00983076	0,045766666
PLACER COUNTY APCD	2018	LDT2	Aggregated	40	GAS	341670,7604	0,018782215	1,153800357	0,109409427	0,003334346	0,0012486	0,001148401	336,9452257	0,00434607	0,008436844	0,02698945
PLACER COUNTY APCD	2018	LHDT1	Aggregated	40	DSL	8571,322754	0,11326465	0,593190993	4,162744734	0,004475179	0,024725105	0,023655508	473,3837299	0,005260926	0,07440933	0,128944274
PLACER COUNTY APCD	2018	LHDT2	Aggregated	40	DSL	2674,363297	0,080175606	0,410456871	2,594410339	0,005008194	0,018897578	0,018080077	529,7659924	0,003724004	0,083271837	0,091274598
PLACER COUNTY APCD	2018	MDV	Aggregated	40	DSL	5945,066356	0,012929492	0,18724086	0,100199683	0,003421002	0,006852189	0,006555767	361,8731341	0,00060055	0,056881417	0,014719368
PLACER COUNTY APCD	2018	MHDT	Aggregated	40	DSL	8362,960493	0,153103733	0,558485779	3,46381207	0,008946419	0,088402026	0,084577794	946,9611147	0,007111272	0,1488491	0,174296946
PLACER COUNTY APCD	2018	HHDT	Aggregated	40	DSL	10051,57869	0,156770661	0,656592178	5,239475109	0,014402688	0,072322063	0,069193442	1524,496562	0,007281591	0,23962963	0,178471464

WPWMA Off-Road Equipment (Landfill / MRF / C&D / Composting)
Operation Emissions - Proposed Project Exhaust Emissions

Assumptions:

Equipment for Operation During:	2020 - 2050	
Operation Schedule:	52	weeks/yr
	6	days/week
	10	hrs/day

Future Off-Road Equipment at Landfill

Off Road Equipment Type[1]	Number (ea)	Fuel Type (i.e. Diesel, Electric)	Daily Hours of Operation	Annual Days Equipment Used	Horsepower (hp) - Optional
325DL Excavator	1	Diesel	10	261	188
730 Articulated Dump Truck	1	Diesel	10	261	319
D8T CAB/AIR DOZER	1	Diesel	8	261	310
D6T LGP VPAT Dozer	1	Diesel	8	261	202
826H CAB/AIR Landfill Compactor	1	Diesel	6	261	401
826K HRC Landfill Compactor DCA2	1	Diesel	10	261	426
Water Truck 2017 Freightliner	1	Diesel	10	261	280
Light Plant	1	Diesel	3	80	15
Tarp Deployment Machine	1	Gasoline	1	190	10
140H Grader	1	Diesel	1	261	222

[1] Trucks hauling ADC and waste for placement in the landfill are captured in the Internal Operational Traffic values in the WAP Flow Chart.

Off-Road Equipment at MRF

Off Road Equipment Type[1]	Number (ea)	Fuel Type (i.e. Diesel, Electric)	Daily Hours of Operation	Annual Days Equipment Used	Horsepower (hp) - Optional
Loader	3	Diesel	10	261	203
Forklift	6	Propane	10	261	97
Sweeper, Kubota, Model: V2003-M-T-ES02	1	Diesel	5	261	55
Roll off truck	3	Diesel	10	261	350

[1] Trucks hauling material from the MRF to other on-site facilities (C&D, landfill, inerts) and off-site locations (for market or reuse) are captured in the Internal

Off-Road Equipment at C&D Facility

Off Road Equipment Type[1]	Number (ea)	Fuel Type (i.e. Diesel, Electric)	Daily Hours of Operation	Annual Days Equipment Used	Horsepower (hp) - Optional
Loader	2	Diesel	10	261	203
320F Excavator	1	Diesel	10	261	188
Portable Wood Grinder	1	Diesel	5	261	500
Forklift	2	Propane	10	261	97
Roll Off Truck	1	Diesel	10	261	350

[1] Trucks hauling material from the C&D facility to other on-site facilities (landfill, inerts) and off-site locations (for market or reuse) are captured in the

Off-Road Equipment at Composting Facility

Off Road Equipment Type	Number (ea)	Fuel Type (i.e. Diesel, Electric)	Daily Hours of Operation	Annual Days Equipment Used	Horsepower (hp) - Optional
Track-Mounted Horizontal Grinder, Rotochopper B66	1	Diesel	5	days/week	1050
Front-End Loader (e.g. Cat 980 or equivalent)	2	Diesel	10	days/week	425
Portable Misting System	1	Electric	5	days/week	-
Self-Propelled Straddle Turner (e.g. Vermeer CT820 or equivalent)[1]	2	Diesel	6	days/week	540
Off-Highway Trucks[2]	1	Diesel	6	days/week	402
Water Truck	2	Diesel	10	Diesel	280

[1] Assumes windrows turned weekly.

[2] Hp taken as default from CalEEMod.

WPWMA Landfill
Combustion Emissions - Offroad Equipment
Net Increase in 2050 from 2018 Baseline

Offroad Mobile Diesel Equipment at Landfill

Project Vehicle Type ID	Equipment Description	HP Estimate
325DL Excavator	Excavator - Gen Ops	188
730 Articulated Dump Truck	Articulated Dump Truck	319
D8T CAB/AIR DOZER	Dozer Used at LF	310
D6T LGP VPAT Dozer	Dozer Used at LF	202
826H CAB/AIR Landfill Compactor	Landfill Compactor	401
826K HRC Landfill Compactor DCA2	Landfill Compactor	426
Water Truck 2017 Freightliner	Water Truck	280
Light Plant	Light Plant	15
Tarp Deployment Machine	Tarp Deployment (Gasoline)	10
140H Grader	Graders	222

Offroad Mobile Diesel Equipment at MRF

Project Vehicle Type ID	Equipment Description	HP Estimate
Loader	Loaders	203
Forklift	Forklifts	97
Sweeper, Kubota, Model: V2003-M-T-ES02	Sweeper	55
Roll off truck	Off-Highway Truck	350

Offroad Mobile Diesel Equipment at C&D

Project Vehicle Type ID	Equipment Description	HP Estimate
Loader	Loaders	203
320F Excavator	Excavator	188
Portable Wood Grinder	Grinder	500
Forklift	Forklifts	97
Roll Off Truck	Off-Highway Truck	350

Offroad Mobile Diesel Equipment at Composting

Project Vehicle Type ID	Equipment Description	HP Estimate
Track-Mounted Horizontal Grinder, Rotochopper B66	Grinder	1050
Front-End Loader (e.g. Cat 980 or equivalent)	Loader	425
Self-Propelled Straddle Turner (e.g. Vermeer CT820 or equivalent)1	Compost Turner	540
Off-Highway Trucks2	Off-Highway Truck	402
Water Truck	Off-Highway Truck	280

Notes:
Offroad combustion emissions use values from CalEEMod, Appendix D Table 3.4 OFFROAD Equipment Emission Factors (g/bhp-hr), October 2017
Scenario year for equipment emission factors is 2040, the highest year provided in CalEEMod App D.

GWP Values from Table A-1 to Subpart A 40 CFR Part 98*

Pollutant	GWP Value
CH_4	28
N_2O	265

*IPCC Fifth Assessment Report AR5, 2014 update.

Conversions:

2,205 lb/kg
1000 kg/metric ton

WPWMA Landfill
Combustion Emissions - Offroad Equipment
Net Increase in 2050 from 2018 Baseline

Offroad Mobile Diesel Equipment at Landfill Scenario Year: 2050

Project Vehicle Type ID	Model Area	Load Factor	Equip Quantity per Day	Equip_Yr_HP	Time Offroad/day/veh (hours)	Daily Peak Factor	Activity Schedule Estimate (Days/yr)
325DL Excavator	LF_DPM	0,38	1	Excavators_2040_250	5,5	1,28	312
730 Articulated Dump Truck	LF_DPM	0,38	1	Off-Highway Trucks_2040_500	5,5	1,28	312
D8T CAB/AIR DOZER	LF_DPM	0,4	1	Rubber Tired Dozers_2040_500	4,4	1,28	312
D6T LGP VPAT Dozer	LF_DPM	0,4	1	Rubber Tired Dozers_2040_250	4,4	1,28	312
826H CAB/AIR Landfill Compactor	LF_DPM	0,38	1	Rollers_2040_500	3,3	1,28	312
826K HRC Landfill Compactor DCA2	LF_DPM	0,38	1	Rollers_2040_500	5,5	1,28	312
Water Truck 2017 Freightliner	LF_DPM	0,38	1	Off-Highway Trucks_2040_500	5,5	1,28	312
Light Plant	LF_DPM	0,37	1	Other General Industrial Equipment_2040_15	1,7	1,28	312
Tarp Deployment Machine	NA	0,37	1	Other General Industrial Equipment_2040_15	0,6	1,28	312
140H Grader	LF_DPM	0,41	1	Graders_2040_250	0,6	1,28	312

Offroad Mobile Diesel Equipment at MRF Scenario Year: 2050

Project Vehicle Type ID	Model Area	Load Factor	Equip Quantity per Day	Equip_Yr_HP	Time Offroad/day/veh (hours)	Daily Peak Factor	Activity Schedule Estimate (Days/yr)
Loader	MRF_DPM	0,36	3	Rubber Tired Loaders_2040_250	7,4	1,28	312
Forklift	MRF_DPM	0,37	6	Rough Terrain Forklifts_2040_120	7,4	1,28	312
Sweeper, Kubota, Model: V2003-M-T-ES02	MRF_DPM	0,46	1	Sweepers/Scrubbers_2040_120	3,7	1,28	312
Roll off truck	MRF_DPM	0,38	3	Off-Highway Trucks_2040_500	7,4	1,28	312

Offroad Mobile Diesel Equipment at C&D Scenario Year: 2050

Project Vehicle Type ID	Model Area	Load Factor	Equip Quantity per Day	Equip_Yr_HP	Time Offroad/day/veh (hours)	Daily Peak Factor	Activity Schedule Estimate (Days/yr)
Loader	CD_DPM	0,36	2	Rubber Tired Loaders_2040_250	16,3	1,28	312
320F Excavator	CD_DPM	0,38	1	Excavators_2040_250	16,3	1,28	312
Portable Wood Grinder	CD_DPM	0,34	1	Other General Industrial Equipment_2040_500	8,2	1,28	312
Forklift	CD_DPM	0,37	2	Rough Terrain Forklifts_2040_120	16,3	1,28	312
Roll Off Truck	CD_DPM	0,38	1	Off-Highway Trucks_2040_500	16,3	1,28	312

Offroad Mobile Diesel Equipment at Compos Scenario Year: 2050

Project Vehicle Type ID	Model Area	Load Factor	Equip Quantity per Day	Equip_Yr_HP	Time Offroad/day/veh (hours)	Daily Peak Factor	Activity Schedule Estimate (Days/yr)
Track-Mounted Horizontal Grinder, Rotochopper B66	CMP_DPM	0,34	1	Other General Industrial Equipment_2040_1000	5,0	1,28	312
Front-End Loader (e.g. Cat 980 or equivalent)	CMP_DPM	0,42	2	Rubber Tired Loaders_2040_500	10,0	1,28	312
Self-Propelled Straddle Turner (e.g. Vermeer CT820 or equivalent)1	CMP_DPM	0,34	2	Other General Industrial Equipment_2040_750	6,0	1,28	312
Off-Highway Trucks2	CMP_DPM	0,38	1	Off-Highway Trucks_2040_500	6,0	1,28	312
Water Truck	CMP_DPM	0,38	2	Off-Highway Trucks_2040_500	10,0	1,28	312

Notes:
Offroad combustion emissions use values from
Factors (g/bhp-hr), October 2017
Scenario year for equipment emission factors

GWP Values from Table A-1

Pollutant
CH_4
N_2O

*IPCC Fifth Assessment Report AR5, 2014 upda

Conversions:
2,205
1000

Facility	2018 Tons	2050 Tons	Proposed 2050 Equipment Quantity	Factor Increase Based on 2018-2050 Tons	Net Increase Based on 2050 - Baseline
MRF	240 068	416 709	Use 2018 equipment quantity	1,74	0,74
Compost	60 606	157 806	Use 2050 custom quantity (we have a list)	2,6	-
C&D	87 404	229 681	Double 2018 equipment quantity	2,63	1,63
Public	32 387	61 035	Double 2018 equipment quantity	1,88	0,88
Landfill	294 923	456 269	Use 2018 equipment quantity	1,55	0,55

WPWMA Landfill
Combustion Emissions - Offroad Equipment
Net Increase in 2050 from 2018 Baseline

Offroad Mobile Diesel Equipment at Landfill	Emission Factors (g/bhp-hr)									
Project Vehicle Type ID	**VOC (g/bhp-hr)**	**CO (g/bhp-hr)**	**NO_x (g/bhp-hr)**	**SO_2 (g/bhp-hr)**	**CO_2 (g/bhp-hr)**	**CH_4 (g/bhp-hr)**	**N_2O (g/bhp-hr)**	**PM_{10} (g/bhp-hr)**	**$PM_{2.5}$ (g/bhp-hr)**	**DPM (g/bhp-hr)**
325DL Excavator	0,0228	0,836	0,099	0,00228	216	0,00646	0,00290	0,00304	0,00304	0,00304
730 Articulated Dump Truck	0,0228	0,836	0,099	0,00190	216	0,00684	0,00307	0,00304	0,00304	0,00304
D8T CAB/AIR DOZER	0,0240	0,880	0,104	0,00200	227	0,00880	0,00394	0,00320	0,00320	0,00320
D6T LGP VPAT Dozer	0,0240	0,024	0,104	0,00240	227	0,00880	0,00394	0,00320	0,00320	0,00320
826H CAB/AIR Landfill Compactor	0,0228	0,836	0,099	0,00190	216	0,00532	0,00238	0,00304	0,00304	0,00304
826K HRC Landfill Compactor DCA2	0,0228	0,836	0,099	0,00190	216	0,00532	0,00238	0,00304	0,00304	0,00304
Water Truck 2017 Freightliner	0,0228	0,836	0,099	0,00190	216	0,00684	0,00307	0,00304	0,00304	0,00304
Light Plant	0,0444	1,517	1,018	0,00296	210	0,01961	0,00879	0,00296	0,00296	0,00296
Tarp Deployment Machine	0,1200	1,517	1,018	0,00296	210	0,01961	0,00879	0,00296	0,00296	0,00296
140H Grader	0,0246	0,902	0,107	0,00246	233	0,00697	0,00312	0,00328	0,00328	0,00328

Offroad Mobile Diesel Equipment at MRF	Emission Factors (g/bhp-hr)									
Project Vehicle Type ID	**VOC (g/bhp-hr)**	**CO (g/bhp-hr)**	**NO_x (g/bhp-hr)**	**SO_2 (g/bhp-hr)**	**CO_2 (g/bhp-hr)**	**CH_4 (g/bhp-hr)**	**N_2O (g/bhp-hr)**	**PM_{10} (g/bhp-hr)**	**$PM_{2.5}$ (g/bhp-hr)**	**DPM (g/bhp-hr)**
Loader	0,0216	0,792	0,094	0,00216	205	0,00576	0,00258	0,00288	0,00288	0,00288
Forklift	0,0222	1,369	0,096	0,00222	210	0,00851	0,00381	0,00296	0,00296	0,00296
Sweeper, Kubota, Model: V2003-M-T-ES02	0,0552	1,702	1,260	0,00276	261	0,01012	0,00454	0,00368	0,00368	0,00368
Roll off truck	0,0228	0,836	0,099	0,00190	216	0,00684	0,00307	0,00304	0,00304	0,00304

Offroad Mobile Diesel Equipment at C&D	Emission Factors (g/bhp-hr)									
Project Vehicle Type ID	**VOC (g/bhp-hr)**	**CO (g/bhp-hr)**	**NO_x (g/bhp-hr)**	**SO_2 (g/bhp-hr)**	**CO_2 (g/bhp-hr)**	**CH_4 (g/bhp-hr)**	**N_2O (g/bhp-hr)**	**PM_{10} (g/bhp-hr)**	**$PM_{2.5}$ (g/bhp-hr)**	**DPM (g/bhp-hr)**
Loader	0,0216	0,792	0,094	0,00216	205	0,00576	0,00258	0,00288	0,00288	0,00288
320F Excavator	0,0600	0,836	0,099	0,00228	216	0,00646	0,00290	0,00304	0,00304	0,00304
Portable Wood Grinder	0,0204	0,748	0,088	0,00170	193	0,00578	0,00259	0,00272	0,00272	0,00272
Forklift	0,0222	1,369	0,096	0,00222	210	0,00851	0,00381	0,00296	0,00296	0,00296
Roll Off Truck	0,0228	0,836	0,099	0,00190	216	0,00684	0,00307	0,00304	0,00304	0,00304

Offroad Mobile Diesel Equipment at Compos	Emission Factors (g/bhp-hr)									
Project Vehicle Type ID	**VOC (g/bhp-hr)**	**CO (g/bhp-hr)**	**NO_x (g/bhp-hr)**	**SO_2 (g/bhp-hr)**	**CO_2 (g/bhp-hr)**	**CH_4 (g/bhp-hr)**	**N_2O (g/bhp-hr)**	**PM_{10} (g/bhp-hr)**	**$PM_{2.5}$ (g/bhp-hr)**	**DPM (g/bhp-hr)**
Track-Mounted Horizontal Grinder, Rotochopper B66	0,0204	0,884	0,762	0,00170	193	0,00578	0,00259	0,00544	0,00544	0,00544
Front-End Loader (e.g. Cat 980 or equivalent)	0,0252	0,924	0,109	0,00210	239	0,00672	0,00301	0,00336	0,00336	0,00336
Self-Propelled Straddle Turner (e.g. Vermeer CT820 or equivalent)1	0,0204	0,748	0,088	0,00170	193	0,00578	0,00259	0,00272	0,00272	0,00272
Off-Highway Trucks2	0,0228	0,836	0,099	0,00190	216	0,00684	0,00307	0,00304	0,00304	0,00304
Water Truck	0,0228	0,836	0,099	0,00190	216	0,00684	0,00307	0,00304	0,00304	0,00304

Notes:
Offroad combustion emissions use values from
Factors (g/bhp-hr), October 2017
Scenario year for equipment emission factors

GWP Values from Table A-1

Pollutant
CH_4
N_2O

*IPCC Fifth Assessment Report AR5, 2014 updat

Conversions:

2,205
1000

WPWMA Landfill
Combustion Emissions - Offroad Equipment
Net Increase in 2050 from 2018 Baseline

Offroad Mobile Diesel Equipment at Landfill	Emissions (lb/hr)										
Project Vehicle Type ID	**VOC (lb/hr)**	**CO (lb/hr)**	**NO_x (lb/hr)**	**SO_2 (lb/hr)**	**CO_2 (lb/hr)**	**CH_4 (lb/hr)**	**N_2O (lb/hr)**	**CO_2e (lb/hr)**	**PM_{10} (lb/hr)**	**$PM_{2.5}$ (lb/hr)**	**DPM (lb/hr)**
325DL Excavator	0,012	0,44	0,053	0,00121	115	0,003	0,00154	115	0,0016	0,0016	0,0016
730 Articulated Dump Truck	0,021	0,75	0,089	0,00171	195	0,006	0,00277	196	0,0027	0,0027	0,0027
D8T CAB/AIR DOZER	0,021	0,77	0,091	0,00175	199	0,008	0,00346	200	0,0028	0,0028	0,0028
D6T LGP VPAT Dozer	0,014	0,01	0,059	0,00137	130	0,005	0,00225	131	0,0018	0,0018	0,0018
826H CAB/AIR Landfill Compactor	0,026	0,95	0,112	0,00215	245	0,006	0,00270	246	0,0034	0,0034	0,0034
826K HRC Landfill Compactor DCA2	0,027	1,01	0,119	0,00229	260	0,006	0,00287	261	0,0037	0,0037	0,0037
Water Truck 2017 Freightliner	0,018	0,66	0,078	0,00150	171	0,005	0,00243	172	0,0024	0,0024	0,0024
Light Plant	0,002	0,06	0,043	0,00013	9	0,001	0,00037	9	0,0001	0,0001	0,0001
Tarp Deployment Machine	0,003	0,04	0,029	0,00008	6	0,001	0,00025	6	0,0001	0,0001	0,0001
140H Grader	0,015	0,57	0,067	0,00154	146	0,004	0,00196	147	0,0021	0,0021	0,0021
	0,160	5,274	0,740	0,014	1475,840	0,046	0,021	1482,587	0,021	0,021	0,021

Offroad Mobile Diesel Equipment at MRF	Emissions (lb/hr)										
Project Vehicle Type ID	**VOC (lb/hr)**	**CO (lb/hr)**	**NO_x (lb/hr)**	**SO_2 (lb/hr)**	**CO_2 (lb/hr)**	**CH_4 (lb/hr)**	**N_2O (lb/hr)**	**CO_2e (lb/hr)**	**PM_{10} (lb/hr)**	**$PM_{2.5}$ (lb/hr)**	**DPM (lb/hr)**
Loader	0,037	1,36	0,161	0,00372	352	0,010	0,00445	354	0,0050	0,0050	0,0050
Forklift	0,037	2,25	0,158	0,00365	346	0,014	0,00628	348	0,0049	0,0049	0,0049
Sweeper, Kubota, Model: V2003-M-T-ES02	0,009	0,26	0,196	0,00043	41	0,002	0,00071	41	0,0006	0,0006	0,0006
Roll off truck	0,068	2,48	0,293	0,00564	641	0,020	0,00910	644	0,0090	0,0090	0,0090
	0,150	6,364	0,809	0,013	1380,208	0,046	0,021	1386,932	0,019	0,019	0,019

Offroad Mobile Diesel Equipment at C&D	Emissions (lb/hr)										
Project Vehicle Type ID	**VOC (lb/hr)**	**CO (lb/hr)**	**NO_x (lb/hr)**	**SO_2 (lb/hr)**	**CO_2 (lb/hr)**	**CH_4 (lb/hr)**	**N_2O (lb/hr)**	**CO_2e (lb/hr)**	**PM_{10} (lb/hr)**	**$PM_{2.5}$ (lb/hr)**	**DPM (lb/hr)**
Loader	0,025	0,91	0,107	0,00248	235	0,007	0,00296	236	0,0033	0,0033	0,0033
320F Excavator	0,032	0,44	0,053	0,00121	115	0,003	0,00154	115	0,0016	0,0016	0,0016
Portable Wood Grinder	0,029	1,06	0,125	0,00240	273	0,008	0,00366	274	0,0038	0,0038	0,0038
Forklift	0,012	0,75	0,053	0,00122	115	0,005	0,00209	116	0,0016	0,0016	0,0016
Roll Off Truck	0,023	0,83	0,098	0,00188	214	0,007	0,00303	215	0,0030	0,0030	0,0030
	0,120	3,990	0,436	0,009	951,946	0,030	0,013	956,300	0,013	0,013	0,013

Offroad Mobile Diesel Equipment at Compo	Emissions (lb/hr)										
Project Vehicle Type ID	**VOC (lb/hr)**	**CO (lb/hr)**	**NO_x (lb/hr)**	**SO_2 (lb/hr)**	**CO_2 (lb/hr)**	**CH_4 (lb/hr)**	**N_2O (lb/hr)**	**CO_2e (lb/hr)**	**PM_{10} (lb/hr)**	**$PM_{2.5}$ (lb/hr)**	**DPM (lb/hr)**
Track-Mounted Horizontal Grinder, Rotochopper B66	0,061	2,62	2,261	0,00505	574	0,017	0,00769	576	0,0162	0,0162	0,0162
Front-End Loader (e.g. Cat 980 or equivalent)	0,061	2,22	0,262	0,00505	574	0,016	0,00724	576	0,0081	0,0081	0,0081
Self-Propelled Straddle Turner (e.g. Vermeer CT820 or equivalent)1	0,062	2,28	0,270	0,00519	590	0,018	0,00791	593	0,0083	0,0083	0,0083
Off-Highway Trucks2	0,026	0,95	0,112	0,00216	245	0,008	0,00349	247	0,0035	0,0035	0,0035
Water Truck	0,036	1,32	0,156	0,00301	342	0,011	0,00486	344	0,0048	0,0048	0,0048
	0,245	9,404	3,062	0,020	2324,924	0,070	0,031	2335,136	0,041	0,041	0,041

Notes:
Offroad combustion emissions use values from
Factors (g/bhp-hr), October 2017
Scenario year for equipment emission factors

GWP Values from Table A-1

Pollutant
CH_4
N_2O

*IPCC Fifth Assessment Report AR5, 2014 updat

Conversions:

2,205
1000

WPWMA Landfill
Combustion Emissions - Offroad Equipment
Net Increase in 2050 from 2018 Baseline

Emissions - Uncontrolled

Offroad Mobile Diesel Equipment at Landfill	Emissions (lb/day)										
Project Vehicle Type ID	**VOC (lb/day)**	**CO (lb/day)**	**NO_x (lb/day)**	**SO_2 (lb/day)**	**CO_2 (lb/day)**	**CH_4 (lb/day)**	**N_2O (lb/day)**	**CO_2e (lb/day)**	**PM_{10} (lb/day)**	**$PM_{2.5}$ (lb/day)**	**DPM (lb/day)**
325DL Excavator	0,07	2,4	0,29	0,007	631	0,019	0,008	634	0,009	0,009	0,009
730 Articulated Dump Truck	0,11	4,1	0,49	0,009	1 071	0,034	0,015	1 076	0,015	0,015	0,015
D8T CAB/AIR DOZER	0,09	3,4	0,40	0,008	877	0,034	0,015	882	0,012	0,012	0,012
D6T LGP VPAT Dozer	0,06	0,1	0,26	0,006	571	0,022	0,010	575	0,008	0,008	0,008
826H CAB/AIR Landfill Compactor	0,09	3,1	0,37	0,007	808	0,020	0,009	811	0,011	0,011	0,011
826K HRC Landfill Compactor DCA2	0,15	5,5	0,65	0,013	1 431	0,035	0,016	1 436	0,020	0,020	0,020
Water Truck 2017 Freightliner	0,10	3,6	0,43	0,008	940	0,030	0,013	945	0,013	0,013	0,013
Light Plant	0,00	0,1	0,07	0,000	15	0,001	0,001	15	0,000	0,000	0,000
Tarp Deployment Machine	0,00	0,0	0,02	0,000	3	0,000	0,000	3	0,000	0,000	0,000
140H Grader	0,01	0,3	0,04	0,001	80	0,002	0,001	81	0,001	0,001	0,001
	0,682	22,795	3,020	0,059	6428,582	0,198	0,089	6457,633	0,090	0,090	0,090

Emissions - Uncontrolled

Offroad Mobile Diesel Equipment at MRF	Emissions (lb/day)										
Project Vehicle Type ID	**VOC (lb/day)**	**CO (lb/day)**	**NO_x (lb/day)**	**SO_2 (lb/day)**	**CO_2 (lb/day)**	**CH_4 (lb/day)**	**N_2O (lb/day)**	**CO_2e (lb/day)**	**PM_{10} (lb/day)**	**$PM_{2.5}$ (lb/day)**	**DPM (lb/day)**
Loader	0,28	10,1	1,19	0,028	2 607	0,073	0,033	2 618	0,037	0,037	0,037
Forklift	0,27	16,7	1,17	0,027	2 561	0,104	0,046	2 576	0,036	0,036	0,036
Sweeper, Kubota, Model: V2003-M-T-ES02	0,03	1,0	0,73	0,002	150	0,006	0,003	151	0,002	0,002	0,002
Roll off truck	0,50	18,4	2,17	0,042	4 745	0,150	0,067	4 767	0,067	0,067	0,067
	1,078	46,112	5,260	0,098	10063,108	0,333	0,149	10112,012	0,142	0,142	0,142

Offroad Mobile Diesel Equipment at C&D	Emissions (lb/day)										
Project Vehicle Type ID	**VOC (lb/day)**	**CO (lb/day)**	**NO_x (lb/day)**	**SO_2 (lb/day)**	**CO_2 (lb/day)**	**CH_4 (lb/day)**	**N_2O (lb/day)**	**CO_2e (lb/day)**	**PM_{10} (lb/day)**	**$PM_{2.5}$ (lb/day)**	**DPM (lb/day)**
Loader	0,40	14,8	1,75	0,040	3 828	0,108	0,048	3 844	0,054	0,054	0,054
320F Excavator	0,52	7,2	0,86	0,020	1 871	0,056	0,025	1 880	0,026	0,026	0,026
Portable Wood Grinder	0,24	8,6	1,02	0,020	2 226	0,067	0,030	2 236	0,031	0,031	0,031
Forklift	0,20	12,2	0,86	0,020	1 880	0,076	0,034	1 891	0,026	0,026	0,026
Roll Off Truck	0,37	13,5	1,59	0,031	3 484	0,110	0,049	3 500	0,049	0,049	0,049
	1,726	56,412	6,080	0,130	13290,244	0,417	0,187	13351,428	0,187	0,187	0,187

Offroad Mobile Diesel Equipment at Compo	Emissions (lb/day)										
Project Vehicle Type ID	**VOC (lb/day)**	**CO (lb/day)**	**NO_x (lb/day)**	**SO_2 (lb/day)**	**CO_2 (lb/day)**	**CH_4 (lb/day)**	**N_2O (lb/day)**	**CO_2e (lb/day)**	**PM_{10} (lb/day)**	**$PM_{2.5}$ (lb/day)**	**DPM (lb/day)**
Track-Mounted Horizontal Grinder, Rotochopper B66	0,30	13,1	11,31	0,025	2 868	0,086	0,038	2 881	0,081	0,081	0,081
Front-End Loader (e.g. Cat 980 or equivalent)	0,61	22,2	2,62	0,050	5 737	0,162	0,072	5 761	0,081	0,081	0,081
Self-Propelled Straddle Turner (e.g. Vermeer CT820 or equivalent)1	0,37	13,7	1,62	0,031	3 541	0,106	0,047	3 556	0,050	0,050	0,050
Off-Highway Trucks2	0,16	5,7	0,67	0,013	1 473	0,047	0,021	1 480	0,021	0,021	0,021
Water Truck	0,36	13,2	1,56	0,030	3 420	0,108	0,049	3 436	0,048	0,048	0,048
	1,799	67,978	17,789	0,150	17038,494	0,508	0,228	17113,094	0,280	0,280	0,280

Notes:
Offroad combustion emissions use values from
Factors (g/bhp-hr), October 2017
Scenario year for equipment emission factors

GWP Values from Table A-1

Pollutant
CH_4
N_2O

*IPCC Fifth Assessment Report AR5, 2014 updat

Conversions:

2,205
1000

WPWMA Landfill
Combustion Emissions - Offroad Equipment
Net Increase in 2050 from 2018 Baseline

Offroad Mobile Diesel Equipment at Landfill	Emissions (lb/yr)										
Project Vehicle Type ID	**VOC (lb/yr)**	**CO (lb/yr)**	**NO_x (lb/yr)**	**SO_2 (lb/yr)**	**CO_2 (lb/yr)**	**CH_4 (lb/yr)**	**N_2O (lb/yr)**	**CO_2e (lb/yr)**	**PM_{10} (lb/yr)**	**$PM_{2.5}$ (lb/yr)**	**DPM (lb/yr)**
325DL Excavator	16	595	70	1,6	153 590	5	2,1	154 264	2	2,2	2,2
730 Articulated Dump Truck	28	1 009	119	2,3	260 613	8	3,7	261 824	4	3,7	3,7
D8T CAB/AIR DOZER	23	826	98	1,9	213 271	8	3,7	214 483	3	3,0	3,0
D6T LGP VPAT Dozer	15	15	64	1,5	138 970	5	2,4	139 760	2	2,0	2,0
826H CAB/AIR Landfill Compactor	21	761	90	1,7	196 562	5	2,2	197 273	3	2,8	2,8
826K HRC Landfill Compactor DCA2	37	1 347	159	3,1	348 028	9	3,8	349 287	5	4,9	4,9
Water Truck 2017 Freightliner	24	886	105	2,0	228 751	7	3,2	229 814	3	3,2	3,2
Light Plant	1	26	17	0,1	3 580	0	0,1	3 629	0	0,1	0,1
Tarp Deployment Machine	0	6	4	0,0	795	0	0,0	806	0	0,0	0,0
140H Grader	2	76	9	0,2	19 569	1	0,3	19 654	0	0,3	0,3
	165,844	5544,828	734,584	14,330	1563729,348	48,140	21,580	1570795,914	22,013	22,013	22,013

Offroad Mobile Diesel Equipment at MRF	Emissions (lb/yr)										
Project Vehicle Type ID	**VOC (lb/yr)**	**CO (lb/yr)**	**NO_x (lb/yr)**	**SO_2 (lb/yr)**	**CO_2 (lb/yr)**	**CH_4 (lb/yr)**	**N_2O (lb/yr)**	**CO_2e (lb/yr)**	**PM_{10} (lb/yr)**	**$PM_{2.5}$ (lb/yr)**	**DPM (lb/yr)**
Loader	67	2 455	290	6,7	634 176	18	8,0	636 797	9	8,9	8,9
Forklift	66	4 055	285	6,6	622 895	25	11,3	626 596	9	8,8	8,8
Sweeper, Kubota, Model: V2003-M-T-ES02	8	238	176	0,4	36 592	1	0,6	36 799	1	0,5	0,5
Roll off truck	122	4 468	528	10,2	1 154 152	37	16,4	1 159 518	16	16,2	16,2
	262,299	11216,671	1279,571	23,813	2447814,918	81,037	36,327	2459710,568	34,458	34,458	34,458

Offroad Mobile Diesel Equipment at C&D	Emissions (lb/yr)										
Project Vehicle Type ID	**VOC (lb/yr)**	**CO (lb/yr)**	**NO_x (lb/yr)**	**SO_2 (lb/yr)**	**CO_2 (lb/yr)**	**CH_4 (lb/yr)**	**N_2O (lb/yr)**	**CO_2e (lb/yr)**	**PM_{10} (lb/yr)**	**$PM_{2.5}$ (lb/yr)**	**DPM (lb/yr)**
Loader	98	3 605	426	9,8	931 268	26	11,8	935 117	13,11	13,11	13,11
320F Excavator	126	1 762	208	4,8	455 185	14	6,1	457 183	6,41	6,41	6,41
Portable Wood Grinder	57	2 097	248	4,8	541 583	16	7,3	543 961	7,62	7,62	7,62
Forklift	48	2 978	209	4,8	457 351	19	8,3	460 068	6,44	6,44	6,44
Roll Off Truck	89	3 281	388	7,5	847 418	27	12,0	851 358	11,93	11,93	11,93
	419,723	13721,994	1479,026	31,687	3232804,102	101,387	45,449	3247686,961	45,508	45,508	45,508

Offroad Mobile Diesel Equipment at Compos	Emissions (lb/yr)										
Project Vehicle Type ID	**VOC (lb/yr)**	**CO (lb/yr)**	**NO_x (lb/yr)**	**SO_2 (lb/yr)**	**CO_2 (lb/yr)**	**CH_4 (lb/yr)**	**N_2O (lb/yr)**	**CO_2e (lb/yr)**	**PM_{10} (lb/yr)**	**$PM_{2.5}$ (lb/yr)**	**DPM (lb/yr)**
Track-Mounted Horizontal Grinder, Rotochopper B66	74	3 192	2 750	6,1	697 745	21	9,4	700 809	20	19,6	19,6
Front-End Loader (e.g. Cat 980 or equivalent)	147	5 402	638	12,3	1 395 492	39	17,6	1 401 260	20	19,6	19,6
Self-Propelled Straddle Turner (e.g. Vermeer CT820 or equivalent)1	91	3 334	394	7,6	861 217	26	11,5	864 998	12	12,1	12,1
Off-Highway Trucks2	38	1 387	164	3,2	358 277	11	5,1	359 943	5	5,0	5,0
Water Truck	88	3 220	381	7,3	831 821	26	11,8	835 689	12	11,7	11,7
	437,574	16535,499	4327,155	36,465	4144552,337	123,618	55,415	4162698,600	68,165	68,165	68,165

Notes:
Offroad combustion emissions use values fron
Factors (g/bhp-hr), October 2017
Scenario year for equipment emission factors

GWP Values from Table A-1

Pollutant
CH_4
N_2O

*IPCC Fifth Assessment Report AR5, 2014 updat

Conversions:

2,205
1000

WPWMA Landfill
Combustion Emissions - Offroad Equipment
Net Increase in 2050 from 2018 Baseline

Offroad Mobile Diesel Equipment at Landfill	Emissions (TPY)										
Project Vehicle Type ID	**VOC (TPY)**	**CO (TPY)**	**NO_x (TPY)**	**SO_2 (TPY)**	**CO_2 (TPY)**	**CH_4 (TPY)**	**N_2O (TPY)**	**CO_2e (TPY)**	**PM_{10} (TPY)**	**$PM_{2.5}$ (TPY)**	**DPM (TPY)**
325DL Excavator	0,01	0,30	0,04	0,001	77	0,002	0,001	77	0,00	0,00	0,001
730 Articulated Dump Truck	0,01	0,50	0,06	0,001	130	0,004	0,002	131	0,00	0,00	0,002
D8T CAB/AIR DOZER	0,01	0,41	0,05	0,001	107	0,004	0,002	107	0,00	0,00	0,002
D6T LGP VPAT Dozer	0,01	0,01	0,03	0,001	69	0,003	0,001	70	0,00	0,00	0,001
826H CAB/AIR Landfill Compactor	0,01	0,38	0,04	0,001	98	0,002	0,001	99	0,00	0,00	0,001
826K HRC Landfill Compactor DCA2	0,02	0,67	0,08	0,002	174	0,004	0,002	175	0,00	0,00	0,002
Water Truck 2017 Freightliner	0,01	0,44	0,05	0,001	114	0,004	0,002	115	0,00	0,00	0,002
Light Plant	0,00	0,01	0,01	0,000	2	0,000	0,000	2	0,00	0,00	0,000
Tarp Deployment Machine	0,00	0,00	0,00	0,000	0	0,000	0,000	0	0,00	0,00	0,000
140H Grader	0,00	0,04	0,00	0,000	10	0,000	0,000	10	0,00	0,00	0,000
	0,083	2,772	0,367	0,007	781,865	0,024	0,011	785,398	0,011	0,011	0,011

Offroad Mobile Diesel Equipment at MRF	Emissions (TPY)										
Project Vehicle Type ID	**VOC (TPY)**	**CO (TPY)**	**NO_x (TPY)**	**SO_2 (TPY)**	**CO_2 (TPY)**	**CH_4 (TPY)**	**N_2O (TPY)**	**CO_2e (TPY)**	**PM_{10} (TPY)**	**$PM_{2.5}$ (TPY)**	**DPM (TPY)**
Loader	0,03	1,23	0,15	0,003	317	0,009	0,004	318	0,00	0,00	0,004
Forklift	0,03	2,03	0,14	0,003	311	0,013	0,006	313	0,00	0,00	0,004
Sweeper, Kubota, Model: V2003-M-T-ES02	0,00	0,12	0,09	0,000	18	0,001	0,000	18	0,00	0,00	0,000
Roll off truck	0,06	2,23	0,26	0,005	577	0,018	0,008	580	0,01	0,01	0,008
	0,131	5,608	0,640	0,012	1223,907	0,041	0,018	1229,855	0,017	0,017	0,017

Offroad Mobile Diesel Equipment at C&D	Emissions (TPY)										
Project Vehicle Type ID	**VOC (TPY)**	**CO (TPY)**	**NO_x (TPY)**	**SO_2 (TPY)**	**CO_2 (TPY)**	**CH_4 (TPY)**	**N_2O (TPY)**	**CO_2e (TPY)**	**PM_{10} (TPY)**	**$PM_{2.5}$ (TPY)**	**DPM (TPY)**
Loader	0,05	1,80	0,21	0,005	466	0,013	0,006	468	0,01	0,01	0,007
320F Excavator	0,06	0,88	0,10	0,002	228	0,007	0,003	229	0,00	0,00	0,003
Portable Wood Grinder	0,03	1,05	0,12	0,002	271	0,008	0,004	272	0,00	0,00	0,004
Forklift	0,02	1,49	0,10	0,002	229	0,009	0,004	230	0,00	0,00	0,003
Roll Off Truck	0,04	1,64	0,19	0,004	424	0,013	0,006	426	0,01	0,01	0,006
	0,210	6,861	0,740	0,016	1616,402	0,051	0,023	1623,843	0,023	0,023	0,023

Offroad Mobile Diesel Equipment at Compos	Emissions (TPY)										
Project Vehicle Type ID	**VOC (TPY)**	**CO (TPY)**	**NO_x (TPY)**	**SO_2 (TPY)**	**CO_2 (TPY)**	**CH_4 (TPY)**	**N_2O (TPY)**	**CO_2e (TPY)**	**PM_{10} (TPY)**	**$PM_{2.5}$ (TPY)**	**DPM (TPY)**
Track-Mounted Horizontal Grinder, Rotochopper B66	0,04	2	1	0,003	349	0,010	0,005	350	0,0	0,0	0,010
Front-End Loader (e.g. Cat 980 or equivalent)	0,07	3	0	0,006	698	0,020	0,009	701	0,0	0,0	0,010
Self-Propelled Straddle Turner (e.g. Vermeer CT820 or equivalent)1	0,05	2	0	0,004	431	0,013	0,006	432	0,0	0,0	0,006
Off-Highway Trucks2	0,02	1	0	0,002	179	0,006	0,003	180	0,0	0,0	0,003
Water Truck	0,04	2	0	0,004	416	0,013	0,006	418	0,0	0,0	0,006
	0,219	8,268	2,164	0,018	2072,276	0,062	0,028	2081,349	0,034	0,034	0,034

Notes:
Offroad combustion emissions use values fron
Factors (g/bhp-hr), October 2017
Scenario year for equipment emission factors

GWP Values from Table A-1

Pollutant
CH_4
N_2O

*IPCC Fifth Assessment Report AR5, 2014 updat

Conversions:

2,205
1000

WPWMA Landfill
Offroad Emissions Factors

BSFC for Offroad Diesel Engines for Speciation:

CalEEMod Appendix A:

Diesel heat value	19 300	BTU/lb
BSFC	7 000	BTU/hp-hr
Density Diesel	6,94	lb/gal

https://ww3.arb.ca.gov/msei/ordiesel/usepa_bsfc.pdf

BSFC for Equip <=100 hp	0,408	lb/hp-hr
BSFC for Equip <=100 hp	0,0588	gal/hp-hr
BSFC for Equip >100 hp	0,367	lb/hp-hr
BSFC for Equip >100 hp	**0,0529**	gal/hp-hr

APCD New Stationary Prime Engines:

4,85

https://www.arb.ca.gov/diesel/documents/FinalReg2011.pdf

Table 4: Prime Engines g/bhp-hr

	0-174hp	175	750
Diesel PM	0,01	0,01	0,01
VOC	0,14	0,14	0,14
CO	3,7	2,6	2,6
NO_x	0,3	0,3	0,5

EFs for Tier-specific Engines:

CalEEMod - Appendix D - Default Data Tables - October 2017
http://www.aqmd.gov/docs/default-source/caleemod/05_appendix-d2016-3-2.pdf?sfvrsn=4

Table 3.5 OFFROAD Emission Factor Based on Engine Tier

Tier	Low HP	High HP	CO (g/bhp-hr)	NO_x (g/bhp-hr)	PM_{10} (g/bhp-hr)	$PM_{2.5}$ (g/bhp-hr)	VOC (g/bhp-hr)
Tier 1	25	49	4,1	5,26	0,48	0,48	1,74
	50	74	6,9	6,54	0,552	0,552	1,19
	75	119	6,9	6,54	0,552	0,552	1,19
	120	174	6,9	6,54	0,274	0,274	0,82
	175	299	6,9	5,93	0,108	0,108	0,38
	300	599	6,9	5,93	0,108	0,108	0,38
	600	750	6,9	5,93	0,108	0,108	0,38
	751	2000	6,9	5,93	0,108	0,108	0,38
Tier 2	25	49	4,1	4,63	0,28	0,28	0,29
	50	74	3,7	4,75	0,192	0,192	0,23
	75	119	3,7	4,75	0,192	0,192	0,23
	120	174	3,7	4,17	0,128	0,128	0,19
	175	299	2,6	4,15	0,088	0,088	0,12
	300	599	2,6	3,79	0,088	0,088	0,12
	600	750	2,6	3,79	0,088	0,088	0,12
	751	2000	2,6	3,79	0,088	0,088	0,12
Tier 3	25	49	4,1	4,63	0,28	0,28	0,29
	50	74	3,7	2,74	0,192	0,192	0,12
	75	119	3,7	2,74	0,192	0,192	0,12
	120	174	3,7	2,32	0,112	0,112	0,12
	175	299	2,6	2,32	0,088	0,088	0,12
	300	599	2,6	2,32	0,088	0,088	0,12
	600	750	2,6	2,32	0,088	0,088	0,12
	751	2000	2,6	2,32	0,088	0,088	0,12
Tier 4 Interim	25	49	4,1	4,55	0,128	0,128	0,12
	50	74	3,7	2,74	0,112	0,112	0,12
	75	119	3,7	2,14	0,008	0,008	0,11
	120	174	3,7	2,15	0,008	0,008	0,06
	175	299	2,6	1,29	0,008	0,008	0,08
	300	599	2,6	1,29	0,008	0,008	0,08
	600	750	2,6	1,29	0,008	0,008	0,08
	751	2000	2,6	2,24	0,048	0,048	0,12
Tier 4 Final	25	49	4,1	2,75	0,008	0,008	0,12
	50	74	3,7	2,74	0,008	0,008	0,12
	75	119	3,7	0,26	0,008	0,008	0,06
	120	174	3,7	0,26	0,008	0,008	0,06
	175	299	2,2	0,26	0,008	0,008	0,06
	300	599	2,2	0,26	0,008	0,008	0,06
	600	750	2,2	0,26	0,008	0,008	0,06
	751	2000	2,6	2,24	0,016	0,016	0,06

Source: ARB. 2011. The Carl Moyer Program Guidelines. Available at:http://www.arb.ca.gov/msprog/moyer/guidelines/2011gl/2011cmpgl_3_27_13.pdf

Table 3.3 OFFROAD Default Horsepower and Load Factors

OFFROAD Equipment Type	Horsepower	Load Factor
Aerial Lifts	63	0,31
Air Compressors	78	0,48
Bore/Drill Rigs	221	0,5
Cement and Mortar Mixers	9	0,56
Concrete/Industrial Saws	81	0,73
Cranes	231	0,29
Crawler Tractors	212	0,43
Crushing/Proc. Equipment	85	0,78
Dumpers/Tenders	16	0,38
Excavators	158	0,38
Forklifts	89	0,2
Generator Sets	84	0,74
Graders	187	0,41
Off-Highway Tractors	124	0,44
Off-Highway Trucks	402	0,38
Other Construction Equipment	172	0,42
Other General Industrial Equipment	88	0,34
Other Material Handling Equipment	168	0,4
Pavers	130	0,42
Paving Equipment	132	0,36
Plate Compactors	8	0,43
Pressure Washers	13	0,3
Pumps	84	0,74
Rollers	80	0,38
Rough Terrain Forklifts	100	0,4
Rubber Tired Dozers	247	0,4
Rubber Tired Loaders	203	0,36
Scrapers	367	0,48
Signal Boards	6	0,82
Skid Steer Loaders	65	0,37
Surfacing Equipment	263	0,3
Sweepers/Scrubbers	64	0,46
Tractors/Loaders/Backhoes	97	0,37
Trenchers	78	0,5
Welders	46	0,45

Notes: Based on the weighted average horsepower (by equipment population) and load factors for the mode of the engine groupings in 2011 OFFROAD

EFs using Default Emissions Factors:

CalEEMod - Appendix D - Default Data Tables - October 2017
http://www.aqmd.gov/docs/default-source/caleemod/05_appendix-d2016-3-2.pdf?sfvrsn=4
Table 3.4 OFFROAD Equipment Emission Factors (g/bhp-hr)

Equipment Type	Year	Low HP	High HP	Equip_yr_hp-ceiling	TOG (g/bhp-hr)	VOC (g/bhp-hr)	CO (g/bhp-hr)	NO_x (g/bhp-hr)	SO_2 (g/bhp-hr)	PM_{10} (g/bhp-hr)	$PM_{2.5}$ (g/bhp-hr)	CO_2 (g/bhp-hr)	CH_4 (g/bhp-hr)	N_2O (g/bhp-hr)
Aerial Lifts	1990	6	15	Aerial Lifts_1990_15	5,436	1,804	4,999	9,999	0,833	0,968	0,968	568,299	0,162	0,07262069
Aerial Lifts	1990	16	25	Aerial Lifts_1990_25	8,446	2,213	5	6,92	0,679	0,735	0,735	568,299	0,199	0,089206897
Aerial Lifts	1990	26	50	Aerial Lifts_1990_50	22,237	3,256	6,91	7,372	0,692	0,948	0,948	568,299	0,293	0,131344828
Aerial Lifts	1990	51	120	Aerial Lifts_1990_120	25,547	1,927	5,026	13,323	0,628	1,005	1,005	568,299	0,173	0,077551724
Aerial Lifts	1990	251	500	Aerial Lifts_1990_500	90,051	1,214	6,888	11,7	0,525	0,605	0,605	568,299	0,109	0,048862069
Aerial Lifts	1990	501	750	Aerial Lifts_1990_750	162,768	1,214	6,887	11,7	0,538	0,605	0,605	568,299	0,109	0,048862069
Aerial Lifts	2000	6	15	Aerial Lifts_2000_15	4,911	1,629	4,729	8,804	0,079	0,737	0,737	568,299	0,147	0,065896552
Aerial Lifts	2000	16	25	Aerial Lifts_2000_25	7,927	2,077	4,749	6,401	0,064	0,569	0,569	568,299	0,187	0,083827586
Aerial Lifts	2000	26	50	Aerial Lifts_2000_50	21,066	3,084	6,643	6,596	0,065	0,711	0,711	568,3	0,278	0,12462069
Aerial Lifts	2000	51	120	Aerial Lifts_2000_120	20,809	1,569	4,216	9,602	0,059	0,705	0,705	568,299	0,141	0,063206897
Aerial Lifts	2000	251	500	Aerial Lifts_2000_500	60,706	0,819	3,931	8,191	0,049	0,31	0,31	568,3	0,073	0,032724138
Aerial Lifts	2000	501	750	Aerial Lifts_2000_750	109,732	0,819	3,931	8,191	0,051	0,31	0,31	568,299	0,073	0,032724138
Aerial Lifts	2005	6	15	Aerial Lifts_2005_15	2,733	0,907	3,649	5,927	0,079	0,424	0,424	568,3	0,081	0,036310345
Aerial Lifts	2005	16	25	Aerial Lifts_2005_25	5,948	1,558	3,804	5,978	0,064	0,474	0,474	568,299	0,14	0,062758621
Aerial Lifts	2005	26	50	Aerial Lifts_2005_50	18,56	2,717	6,122	6,139	0,065	0,657	0,657	568,299	0,245	0,109827586
Aerial Lifts	2005	51	120	Aerial Lifts_2005_120	17,765	1,34	3,898	8,079	0,059	0,651	0,651	568,299	0,12	0,053793103
Aerial Lifts	2005	251	500	Aerial Lifts_2005_500	41,275	0,556	2,307	6,521	0,049	0,217	0,217	568,299	0,05	0,022413793
Aerial Lifts	2005	501	750	Aerial Lifts_2005_750	76,693	0,572	2,307	6,666	0,051	0,219	0,219	568,299	0,051	0,022862069
Aerial Lifts	2010	6	15	Aerial Lifts_2010_15	0,646663	0,543	3,62771	4,927	0,005	0,322	0,296	583,4159	0,17	0,076206897
Aerial Lifts	2010	16	25	Aerial Lifts_2010_25	0,646663	0,543	3,62771	4,927	0,005	0,322	0,296	583,4159	0,17	0,076206897
Aerial Lifts	2010	26	50	Aerial Lifts_2010_50	0,646663	0,543	3,62771	4,927	0,005	0,322	0,296	583,4159	0,17	0,076206897
Aerial Lifts	2010	51	120	Aerial Lifts_2010_120	0,478206	0,402	3,35167	5,13121	0,005	0,329	0,303	524,5713	0,153	0,068586207
Aerial Lifts	2010	251	500	Aerial Lifts_2010_500	0,542967	0,456	1,70527	7,02372	0,005	0,22	0,202	524,505	0,153	0,068586207
Aerial Lifts	2010	501	750	Aerial Lifts_2010_750	54,853	0,409	1,535	5,216	0,005	0,16	0,16	568,299	0,036	0,016137931
Aerial Lifts	2011	6	15	Aerial Lifts_2011_15	0,492997	0,414	3,43961	4,84101	0,005	0,274	0,253	581,9574	0,17	0,076206897
Aerial Lifts	2011	16	25	Aerial Lifts_2011_25	0,492997	0,414	3,43961	4,84101	0,005	0,274	0,253	581,9574	0,17	0,076206897
Aerial Lifts	2011	26	50	Aerial Lifts_2011_50	0,492997	0,414	3,43961	4,84101	0,005	0,274	0,253	581,9574	0,17	0,076206897
Aerial Lifts	2011	51	120	Aerial Lifts_2011_120	0,406188	0,341	3,31532	4,72007	0,005	0,287	0,264	523,2599	0,153	0,068586207
Aerial Lifts	2011	251	500	Aerial Lifts_2011_500	0,547278	0,46	1,71344	7,05257	0,005	0,222	0,204	523,1938	0,153	0,068586207
Aerial Lifts	2011	501	750	Aerial Lifts_2011_750	50,06	0,373	1,402	4,839	0,005	0,144	0,144	568,299	0,033	0,014793103
Aerial Lifts	2012	6	15	Aerial Lifts_2012_15	0,448839	0,377	3,41137	4,66755	0,005	0,247	0,227	580,4989	0,17	0,076206897
Aerial Lifts	2012	16	25	Aerial Lifts_2012_25	0,448839	0,377	3,41137	4,66755	0,005	0,247	0,227	580,4989	0,17	0,076206897
Aerial Lifts	2012	26	50	Aerial Lifts_2012_50	0,448839	0,377	3,41137	4,66755	0,005	0,247	0,227	580,4989	0,17	0,076206897
Aerial Lifts	2012	51	120	Aerial Lifts_2012_120	0,348327	0,293	3,28979	4,38748	0,005	0,251	0,231	521,9485	0,153	0,068586207
Aerial Lifts	2012	251	500	Aerial Lifts_2012_500	0,551589	0,463	1,72161	7,08141	0,005	0,225	0,207	521,8825	0,153	0,068586207
Aerial Lifts	2012	501	750	Aerial Lifts_2012_750	46,364	0,346	1,307	4,488	0,005	0,131	0,131	568,299	0,031	0,013896552
Aerial Lifts	2013	6	15	Aerial Lifts_2013_15	0,365114	0,307	3,29997	4,33199	0,005	0,196	0,18	577,5818	0,17	0,076206897
Aerial Lifts	2013	16	25	Aerial Lifts_2013_25	0,365114	0,307	3,29997	4,33199	0,005	0,196	0,18	577,5818	0,17	0,076206897
Aerial Lifts	2013	26	50	Aerial Lifts_2013_50	0,365114	0,307	3,29997	4,33199	0,005	0,196	0,18	577,5818	0,17	0,076206897
Aerial Lifts	2013	51	120	Aerial Lifts_2013_120	0,288639	0,243	3,25075	3,92887	0,005	0,202	0,186	519,3256	0,153	0,068586207
Aerial Lifts	2013	251	500	Aerial Lifts_2013_500	0,277309	0,233	0,97787	4,58384	0,005	0,1	0,092	519,26	0,153	0,068586207
Aerial Lifts	2013	501	750	Aerial Lifts_2013_750	43,268	0,322	1,237	4,155	0,005	0,119	0,119	568,299	0,029	0,013
Aerial Lifts	2014	6	15	Aerial Lifts_2014_15	0,309966	0,26	3,23337	4,09559	0,005	0,158	0,145	574,6647	0,17	0,076206897
Aerial Lifts	2014	16	25	Aerial Lifts_2014_25	0,309966	0,26	3,23337	4,09559	0,005	0,158	0,145	574,6647	0,17	0,076206897
Aerial Lifts	2014	26	50	Aerial Lifts_2014_50	0,309966	0,26	3,23337	4,09559	0,005	0,158	0,145	574,6647	0,17	0,076206897
Aerial Lifts	2014	51	120	Aerial Lifts_2014_120	0,240786	0,202	3,2195	3,37278	0,005	0,161	0,148	516,7028	0,153	0,068586207
Aerial Lifts	2014	251	500	Aerial Lifts_2014_500	0,281092	0,236	0,98271	4,60231	0,005	0,101	0,093	516,6375	0,153	0,068586207
Aerial Lifts	2014	501	750	Aerial Lifts_2014_750	40,165	0,299	1,178	3,761	0,005	0,109	0,109	568,299	0,027	0,012103448
Aerial Lifts	2015	6	15	Aerial Lifts_2015_15	0,295589	0,248	3,23342	3,93284	0,005	0,136	0,125	568,8305	0,17	0,076206897
Aerial Lifts	2015	16	25	Aerial Lifts_2015_25	0,295589	0,248	3,23342	3,93284	0,005	0,136	0,125	568,8305	0,17	0,076206897
Aerial Lifts	2015	26	50	Aerial Lifts_2015_50	0,295589	0,248	3,23342	3,93284	0,005	0,136	0,125	568,8305	0,17	0,076206897
Aerial Lifts	2015	51	120	Aerial Lifts_2015_120	0,226785	0,191	3,21782	3,1134	0,005	0,143	0,132	511,457	0,153	0,068586207
Aerial Lifts	2015	251	500	Aerial Lifts_2015_500	0,284874	0,239	0,98755	4,62077	0,005	0,102	0,094	511,3924	0,153	0,068586207
Aerial Lifts	2015	501	750	Aerial Lifts_2015_750	37,246	0,278	1,13	3,38	0,005	0,098	0,098	568,299	0,025	0,011206897
Aerial Lifts	2016	6	15	Aerial Lifts_2016_15	0,271111	0,228	3,19737	3,67571	0,005	0,105	0,096	562,9964	0,17	0,076206897
Aerial Lifts	2016	16	25	Aerial Lifts_2016_25	0,271111	0,228	3,19737	3,67571	0,005	0,105	0,096	562,9964	0,17	0,076206897
Aerial Lifts	2016	26	50	Aerial Lifts_2016_50	0,271111	0,228	3,19737	3,67571	0,005	0,105	0,096	562,9964	0,17	0,076206897
Aerial Lifts	2016	51	120	Aerial Lifts_2016_120	0,196986	0,166	3,20103	2,72218	0,005	0,112	0,103	506,2113	0,153	0,068586207
Aerial Lifts	2016	251	500	Aerial Lifts_2016_500	0,288656	0,243	0,99238	4,63924	0,005	0,103	0,095	506,1474	0,153	0,068586207
Aerial Lifts	2016	501	750	Aerial Lifts_2016_750	34,529	0,257	1,089	3,015	0,005	0,088	0,088	568,299	0,023	0,010310345
Aerial Lifts	2017	6	15	Aerial Lifts_2017_15	0,248829	0,209	3,16913	3,46956	0,005	0,079	0,073	554,2451	0,17	0,076206897
Aerial Lifts	2017	16	25	Aerial Lifts_2017_25	0,248829	0,209	3,16913	3,46956	0,005	0,079	0,073	554,2451	0,17	0,076206897
Aerial Lifts	2017	26	50	Aerial Lifts_2017_50	0,248829	0,209	3,16913	3,46956	0,005	0,079	0,073	554,2451	0,17	0,076206897
Aerial Lifts	2017	51	120	Aerial Lifts_2017_120	0,169799	0,143	3,18429	2,36368	0,005	0,083	0,077	498,3428	0,153	0,068586207

Aerial Lifts	2017	251	500	Aerial Lifts_2017_500	0,292438	0,246	0,99722	4,6577	0,005	0,105	0,096	498,2798	0,153	0,068586207
Aerial Lifts	2017	501	750	Aerial Lifts_2017_750	32,148	0,239	1,059	2,68	0,005	0,079	0,079	568,299	0,021	0,009413793
Aerial Lifts	2018	6	15	Aerial Lifts_2018_15	0,216292	0,182	3,11639	3,2101	0,005	0,054	0,05	545,4939	0,17	0,076206897
Aerial Lifts	2018	16	25	Aerial Lifts_2018_25	0,216292	0,182	3,11639	3,2101	0,005	0,054	0,05	545,4939	0,17	0,076206897
Aerial Lifts	2018	26	50	Aerial Lifts_2018_50	0,216292	0,182	3,11639	3,2101	0,005	0,054	0,05	545,4939	0,17	0,076206897
Aerial Lifts	2018	51	120	Aerial Lifts_2018_120	0,145088	0,122	3,16685	2,0636	0,005	0,057	0,052	490,4742	0,153	0,068586207
Aerial Lifts	2018	251	500	Aerial Lifts_2018_500	0,074117	0,062	0,93655	0,63368	0,005	0,009	0,008	490,4122	0,153	0,068586207
Aerial Lifts	2018	501	750	Aerial Lifts_2018_750	30,169	0,225	1,037	2,385	0,005	0,071	0,071	568,299	0,02	0,008965517
Aerial Lifts	2019	6	15	Aerial Lifts_2019_15	0,204518	0,172	3,11451	3,07945	0,005	0,042	0,038	536,7427	0,17	0,076206897
Aerial Lifts	2019	16	25	Aerial Lifts_2019_25	0,204518	0,172	3,11451	3,07945	0,005	0,042	0,038	536,7427	0,17	0,076206897
Aerial Lifts	2019	26	50	Aerial Lifts_2019_50	0,204518	0,172	3,11451	3,07945	0,005	0,042	0,038	536,7427	0,17	0,076206897
Aerial Lifts	2019	51	120	Aerial Lifts_2019_120	0,14071	0,118	3,17254	1,97658	0,005	0,049	0,045	482,6056	0,153	0,068586207
Aerial Lifts	2019	251	500	Aerial Lifts_2019_500	0,077988	0,066	0,94139	0,63586	0,005	0,009	0,008	482,5446	0,153	0,068586207
Aerial Lifts	2019	501	750	Aerial Lifts_2019_750	28,429	0,212	1,023	2,117	0,005	0,064	0,064	568,299	0,019	0,008517241
Aerial Lifts	2020	6	15	Aerial Lifts_2020_15	0,199447	0,168	3,09942	2,95486	0,005	0,031	0,028	525,0743	0,17	0,076206897
Aerial Lifts	2020	16	25	Aerial Lifts_2020_25	0,199447	0,168	3,09942	2,95486	0,005	0,031	0,028	525,0743	0,17	0,076206897
Aerial Lifts	2020	26	50	Aerial Lifts_2020_50	0,199447	0,168	3,09942	2,95486	0,005	0,031	0,028	525,0743	0,17	0,076206897
Aerial Lifts	2020	51	120	Aerial Lifts_2020_120	0,136778	0,115	3,1768	1,86859	0,005	0,042	0,038	472,1142	0,153	0,068586207
Aerial Lifts	2020	251	500	Aerial Lifts_2020_500	0,081859	0,069	0,94623	0,63803	0,005	0,009	0,008	472,0545	0,153	0,068586207
Aerial Lifts	2020	501	750	Aerial Lifts_2020_750	26,846	0,2	1,013	1,868	0,005	0,057	0,057	568,299	0,018	0,008068966
Aerial Lifts	2021	6	15	Aerial Lifts_2021_15	0,196174	0,165	3,11369	2,92238	0,005	0,027	0,024	525,0743	0,17	0,076206897
Aerial Lifts	2021	16	25	Aerial Lifts_2021_25	0,196174	0,165	3,11369	2,92238	0,005	0,027	0,024	525,0743	0,17	0,076206897
Aerial Lifts	2021	26	50	Aerial Lifts_2021_50	0,196174	0,165	3,11369	2,92238	0,005	0,027	0,024	525,0743	0,17	0,076206897
Aerial Lifts	2021	51	120	Aerial Lifts_2021_120	0,129509	0,109	3,17624	1,74368	0,005	0,033	0,031	472,1142	0,153	0,068586207
Aerial Lifts	2021	251	500	Aerial Lifts_2021_500	0,08573	0,072	0,95107	0,64021	0,005	0,009	0,008	472,0545	0,153	0,068586207
Aerial Lifts	2021	501	750	Aerial Lifts_2021_750	25,065	0,187	1,004	1,61	0,005	0,05	0,05	568,299	0,016	0,007172414
Aerial Lifts	2022	6	15	Aerial Lifts_2022_15	0,192664	0,162	3,11231	2,90676	0,005	0,024	0,022	525,0743	0,17	0,076206897
Aerial Lifts	2022	16	25	Aerial Lifts_2022_25	0,192664	0,162	3,11231	2,90676	0,005	0,024	0,022	525,0743	0,17	0,076206897
Aerial Lifts	2022	26	50	Aerial Lifts_2022_50	0,192664	0,162	3,11231	2,90676	0,005	0,024	0,022	525,0743	0,17	0,076206897
Aerial Lifts	2022	51	120	Aerial Lifts_2022_120	0,124613	0,105	3,17602	1,62659	0,005	0,03	0,028	472,1142	0,153	0,068586207
Aerial Lifts	2022	251	500	Aerial Lifts_2022_500	0,089601	0,075	0,95591	0,64238	0,005	0,009	0,008	472,0545	0,153	0,068586207
Aerial Lifts	2022	501	750	Aerial Lifts_2022_750	23,788	0,177	0,998	1,424	0,005	0,044	0,044	568,299	0,016	0,007172414
Aerial Lifts	2023	6	15	Aerial Lifts_2023_15	0,19346	0,163	3,12196	2,89722	0,005	0,023	0,021	525,0743	0,17	0,076206897
Aerial Lifts	2023	16	25	Aerial Lifts_2023_25	0,19346	0,163	3,12196	2,89722	0,005	0,023	0,021	525,0743	0,17	0,076206897
Aerial Lifts	2023	26	50	Aerial Lifts_2023_50	0,19346	0,163	3,12196	2,89722	0,005	0,023	0,021	525,0743	0,17	0,076206897
Aerial Lifts	2023	51	120	Aerial Lifts_2023_120	0,119594	0,1	3,17029	1,5481	0,005	0,027	0,025	472,1142	0,153	0,068586207
Aerial Lifts	2023	251	500	Aerial Lifts_2023_500	0,093472	0,079	0,96074	0,64456	0,005	0,009	0,008	472,0545	0,153	0,068586207
Aerial Lifts	2023	501	750	Aerial Lifts_2023_750	22,675	0,169	0,995	1,265	0,005	0,038	0,038	568,299	0,015	0,006724138
Aerial Lifts	2024	6	15	Aerial Lifts_2024_15	0,188737	0,159	3,11285	2,88821	0,005	0,022	0,02	525,0743	0,17	0,076206897
Aerial Lifts	2024	16	25	Aerial Lifts_2024_25	0,188737	0,159	3,11285	2,88821	0,005	0,022	0,02	525,0743	0,17	0,076206897
Aerial Lifts	2024	26	50	Aerial Lifts_2024_50	0,188737	0,159	3,11285	2,88821	0,005	0,022	0,02	525,0743	0,17	0,076206897
Aerial Lifts	2024	51	120	Aerial Lifts_2024_120	0,119572	0,1	3,17255	1,52789	0,005	0,026	0,024	472,1142	0,153	0,068586207
Aerial Lifts	2024	251	500	Aerial Lifts_2024_500	0,097343	0,082	0,96558	0,64674	0,005	0,009	0,009	472,0545	0,153	0,068586207
Aerial Lifts	2024	501	750	Aerial Lifts_2024_750	21,618	0,161	0,991	1,115	0,005	0,033	0,033	568,299	0,014	0,006275862
Aerial Lifts	2025	6	15	Aerial Lifts_2025_15	0,182854	0,154	3,08837	2,87882	0,005	0,021	0,019	525,0743	0,17	0,076206897
Aerial Lifts	2025	16	25	Aerial Lifts_2025_25	0,182854	0,154	3,08837	2,87882	0,005	0,021	0,019	525,0743	0,17	0,076206897
Aerial Lifts	2025	26	50	Aerial Lifts_2025_50	0,182854	0,154	3,08837	2,87882	0,005	0,021	0,019	525,0743	0,17	0,076206897
Aerial Lifts	2025	51	120	Aerial Lifts_2025_120	0,117586	0,099	3,16742	1,51077	0,005	0,026	0,024	472,1142	0,153	0,068586207
Aerial Lifts	2025	251	500	Aerial Lifts_2025_500	0,101214	0,085	0,97042	0,64891	0,005	0,009	0,009	472,0545	0,153	0,068586207
Aerial Lifts	2025	501	750	Aerial Lifts_2025_750	20,597	0,153	0,989	0,974	0,005	0,028	0,028	568,299	0,013	0,005827586
Aerial Lifts	2030	6	15	Aerial Lifts_2030_15	1,993	0,661	3,469	4,142	0,008	0,161	0,161	568,299	0,059	0,026448276
Aerial Lifts	2030	16	25	Aerial Lifts_2030_25	2,616	0,685	2,339	4,332	0,007	0,162	0,162	568,299	0,061	0,027344828
Aerial Lifts	2030	26	50	Aerial Lifts_2030_50	2,317	0,339	3,764	3,135	0,007	0,04	0,04	568,3	0,03	0,013448276
Aerial Lifts	2030	51	120	Aerial Lifts_2030_120	2,504	0,188	3,352	1,657	0,006	0,036	0,036	568,299	0,017	0,00762069
Aerial Lifts	2030	251	500	Aerial Lifts_2030_500	9,37	0,126	0,986	0,479	0,005	0,016	0,016	568,299	0,011	0,004931034
Aerial Lifts	2030	501	750	Aerial Lifts_2030_750	16,962	0,126	0,986	0,485	0,005	0,016	0,016	568,299	0,011	0,004931034
Aerial Lifts	2035	6	15	Aerial Lifts_2035_15	1,993	0,661	3,469	4,142	0,008	0,161	0,161	568,299	0,059	0,026448276
Aerial Lifts	2035	16	25	Aerial Lifts_2035_25	2,616	0,685	2,339	4,332	0,007	0,161	0,161	568,299	0,061	0,027344828
Aerial Lifts	2035	26	50	Aerial Lifts_2035_50	2,033	0,297	3,726	3,017	0,007	0,019	0,019	568,299	0,026	0,011655172
Aerial Lifts	2035	51	120	Aerial Lifts_2035_120	2,202	0,166	3,345	1,466	0,006	0,017	0,017	568,299	0,014	0,006275862
Aerial Lifts	2035	251	500	Aerial Lifts_2035_500	8,659	0,116	0,986	0,33	0,005	0,011	0,011	568,299	0,01	0,004482759
Aerial Lifts	2035	501	750	Aerial Lifts_2035_750	15,653	0,116	0,986	0,33	0,005	0,011	0,011	568,299	0,01	0,004482759
Aerial Lifts	2040	6	15	Aerial Lifts_2040_15	1,993	0,661	3,469	4,142	0,008	0,161	0,161	568,299	0,059	0,026448276
Aerial Lifts	2040	16	25	Aerial Lifts_2040_25	2,616	0,685	2,339	4,332	0,007	0,161	0,161	568,299	0,061	0,027344828
Aerial Lifts	2040	26	50	Aerial Lifts_2040_50	2,015	0,295	3,723	2,966	0,007	0,013	0,013	568,299	0,026	0,011655172
Aerial Lifts	2040	51	120	Aerial Lifts_2040_120	2,141	0,161	3,344	1,407	0,006	0,012	0,012	568,299	0,014	0,006275862
Aerial Lifts	2040	251	500	Aerial Lifts_2040_500	8,324	0,112	0,986	0,279	0,005	0,009	0,009	568,299	0,01	0,004482759
Aerial Lifts	2040	501	750	Aerial Lifts_2040_750	15,046	0,112	0,986	0,279	0,005	0,009	0,009	568,299	0,01	0,004482759
Air Compressors	1990	6	15	Air Compressors_1990_15	4,702	1,804	4,999	9,999	1,018	0,974	0,974	568,299	0,162	0,07262069
Air Compressors	1990	16	25	Air Compressors_1990_25	11,537	2,213	4,999	6,919	0,83	0,74	0,74	568,299	0,199	0,089206897
Air Compressors	1990	26	50	Air Compressors_1990_50	34,016	4,232	8,684	7,735	0,846	1,152	1,152	568,3	0,381	0,170793103

Air Compressors	1990	51	120	Air Compressors_1990_120	37,275	2,2	5,46	14,348	0,768	1,216	1,216	568,299	0,198	0,088758621
Air Compressors	1990	121	175	Air Compressors_1990_175	48,032	1,504	4,835	12,906	0,736	0,806	0,806	568,299	0,135	0,060517241
Air Compressors	1990	176	250	Air Compressors_1990_250	71,231	1,504	4,835	12,906	0,736	0,806	0,806	568,299	0,135	0,060517241
Air Compressors	1990	251	500	Air Compressors_1990_500	112,803	1,348	9,633	12,363	0,642	0,704	0,704	568,299	0,121	0,054241379
Air Compressors	1990	501	750	Air Compressors_1990_750	174,334	1,348	9,633	12,363	0,658	0,704	0,704	568,299	0,121	0,054241379
Air Compressors	1990	751	1000	Air Compressors_1990_1000	235,953	1,344	9,633	12,363	0,658	0,699	0,699	568,3	0,121	0,054241379
Air Compressors	2000	6	15	Air Compressors_2000_15	4,493	1,723	4,875	9,08	0,079	0,747	0,747	568,299	0,155	0,069482759
Air Compressors	2000	16	25	Air Compressors_2000_25	10,924	2,095	4,783	6,405	0,065	0,569	0,569	568,299	0,189	0,084724138
Air Compressors	2000	26	50	Air Compressors_2000_50	31,858	3,963	8,261	6,902	0,066	0,851	0,851	568,299	0,357	0,160034483
Air Compressors	2000	51	120	Air Compressors_2000_120	30,02	1,771	4,544	10,276	0,06	0,835	0,835	568,3	0,159	0,071275862
Air Compressors	2000	121	175	Air Compressors_2000_175	37,86	1,185	3,7	9,332	0,057	0,494	0,494	568,299	0,106	0,047517241
Air Compressors	2000	176	250	Air Compressors_2000_250	47,101	0,994	2,949	8,985	0,057	0,406	0,406	568,299	0,089	0,039896552
Air Compressors	2000	251	500	Air Compressors_2000_500	76,009	0,908	5,008	8,611	0,05	0,36	0,36	568,299	0,082	0,036758621
Air Compressors	2000	501	750	Air Compressors_2000_750	117,469	0,908	5,008	8,611	0,051	0,36	0,36	568,299	0,082	0,036758621
Air Compressors	2000	751	1000	Air Compressors_2000_1000	176,359	1,004	5,6	9,212	0,051	0,379	0,379	568,299	0,09	0,040344828
Air Compressors	2005	6	15	Air Compressors_2005_15	3,634	1,394	4,38	7,817	0,079	0,621	0,621	568,299	0,125	0,056034483
Air Compressors	2005	16	25	Air Compressors_2005_25	8,461	1,622	3,922	6,014	0,065	0,483	0,483	568,299	0,146	0,065448276
Air Compressors	2005	26	50	Air Compressors_2005_50	28,493	3,545	7,671	6,447	0,066	0,792	0,792	568,299	0,319	0,143
Air Compressors	2005	51	120	Air Compressors_2005_120	25,731	1,518	4,196	8,646	0,06	0,775	0,775	568,299	0,137	0,061413793
Air Compressors	2005	121	175	Air Compressors_2005_175	31,762	0,994	3,339	7,911	0,057	0,428	0,428	568,299	0,089	0,039896552
Air Compressors	2005	176	250	Air Compressors_2005_250	33,701	0,711	1,989	7,465	0,057	0,281	0,281	568,299	0,064	0,028689655
Air Compressors	2005	251	500	Air Compressors_2005_500	52,734	0,63	2,602	6,868	0,05	0,252	0,252	568,299	0,056	0,025103448
Air Compressors	2005	501	750	Air Compressors_2005_750	83,252	0,644	2,602	7,019	0,051	0,255	0,255	568,299	0,058	0,026
Air Compressors	2005	751	1000	Air Compressors_2005_1000	135,834	0,773	3,154	8,036	0,051	0,271	0,271	568,299	0,069	0,030931034
Air Compressors	2010	6	15	Air Compressors_2010_15	2,931	1,124	4,027	6,554	0,008	0,473	0,473	568,299	0,101	0,045275862
Air Compressors	2010	16	25	Air Compressors_2010_25	6,607	1,267	3,309	5,477	0,007	0,384	0,384	568,299	0,114	0,051103448
Air Compressors	2010	26	50	Air Compressors_2010_50	23,546	2,929	7,121	6,067	0,007	0,669	0,669	568,299	0,264	0,118344828
Air Compressors	2010	51	120	Air Compressors_2010_120	20,566	1,213	4,044	7,183	0,006	0,653	0,653	568,299	0,109	0,048862069
Air Compressors	2010	121	175	Air Compressors_2010_175	25,827	0,808	3,277	6,422	0,006	0,361	0,361	568,299	0,072	0,032275862
Air Compressors	2010	176	250	Air Compressors_2010_250	24,871	0,525	1,468	6,008	0,006	0,198	0,198	568,299	0,047	0,021068966
Air Compressors	2010	251	500	Air Compressors_2010_500	39,447	0,471	1,648	5,363	0,005	0,182	0,182	568,299	0,042	0,018827586
Air Compressors	2010	501	750	Air Compressors_2010_750	62,011	0,479	1,648	5,507	0,005	0,185	0,185	568,299	0,043	0,019275862
Air Compressors	2010	751	1000	Air Compressors_2010_1000	105,623	0,601	2,147	6,994	0,005	0,209	0,209	568,299	0,054	0,024206897
Air Compressors	2011	6	15	Air Compressors_2011_15	2,782	1,067	3,952	6,283	0,008	0,441	0,441	568,299	0,096	0,043034483
Air Compressors	2011	16	25	Air Compressors_2011_25	6,215	1,192	3,179	5,36	0,007	0,361	0,361	568,299	0,107	0,047965517
Air Compressors	2011	26	50	Air Compressors_2011_50	22,03	2,741	6,919	5,972	0,007	0,636	0,636	568,299	0,247	0,110724138
Air Compressors	2011	51	120	Air Compressors_2011_120	19,321	1,14	4,005	6,805	0,006	0,626	0,626	568,299	0,102	0,045724138
Air Compressors	2011	121	175	Air Compressors_2011_175	24,432	0,765	3,264	6,065	0,006	0,347	0,347	568,299	0,069	0,030931034
Air Compressors	2011	176	250	Air Compressors_2011_250	22,999	0,485	1,372	5,603	0,006	0,177	0,177	568,299	0,043	0,019275862
Air Compressors	2011	251	500	Air Compressors_2011_500	36,661	0,438	1,497	4,981	0,005	0,165	0,165	568,299	0,039	0,017482759
Air Compressors	2011	501	750	Air Compressors_2011_750	57,58	0,445	1,497	5,123	0,005	0,167	0,167	568,299	0,04	0,017931034
Air Compressors	2011	751	1000	Air Compressors_2011_1000	98,738	0,562	1,971	6,637	0,005	0,196	0,196	568,299	0,05	0,022413793
Air Compressors	2012	6	15	Air Compressors_2012_15	2,626	1,007	3,874	5,999	0,008	0,407	0,407	568,299	0,09	0,040344828
Air Compressors	2012	16	25	Air Compressors_2012_25	5,803	1,113	3,043	5,239	0,007	0,337	0,337	568,299	0,1	0,044827586
Air Compressors	2012	26	50	Air Compressors_2012_50	20,318	2,527	6,682	5,869	0,007	0,6	0,6	568,299	0,228	0,102206897
Air Compressors	2012	51	120	Air Compressors_2012_120	17,991	1,061	3,964	6,39	0,006	0,587	0,587	568,299	0,095	0,042586207
Air Compressors	2012	121	175	Air Compressors_2012_175	22,92	0,717	3,251	5,684	0,006	0,324	0,324	568,299	0,064	0,028689655
Air Compressors	2012	176	250	Air Compressors_2012_250	21,576	0,455	1,312	5,216	0,006	0,161	0,161	568,299	0,041	0,01837931
Air Compressors	2012	251	500	Air Compressors_2012_500	34,608	0,413	1,392	4,618	0,005	0,15	0,15	568,299	0,037	0,016586207
Air Compressors	2012	501	750	Air Compressors_2012_750	54,283	0,419	1,392	4,758	0,005	0,153	0,153	568,299	0,037	0,016586207
Air Compressors	2012	751	1000	Air Compressors_2012_1000	91,671	0,522	1,8	6,263	0,005	0,183	0,183	568,299	0,047	0,021068966
Air Compressors	2013	6	15	Air Compressors_2013_15	2,471	0,948	3,796	5,716	0,008	0,373	0,373	568,299	0,085	0,038103448
Air Compressors	2013	16	25	Air Compressors_2013_25	5,393	1,034	2,907	5,117	0,007	0,314	0,314	568,299	0,093	0,041689655
Air Compressors	2013	26	50	Air Compressors_2013_50	18,508	2,302	6,43	5,643	0,007	0,553	0,553	568,299	0,207	0,092793103
Air Compressors	2013	51	120	Air Compressors_2013_120	16,632	0,981	3,921	5,978	0,006	0,543	0,543	568,299	0,088	0,039448276
Air Compressors	2013	121	175	Air Compressors_2013_175	21,377	0,669	3,238	5,321	0,006	0,298	0,298	568,299	0,06	0,026896552
Air Compressors	2013	176	250	Air Compressors_2013_250	20,386	0,43	1,271	4,839	0,006	0,147	0,147	568,299	0,038	0,017034483
Air Compressors	2013	251	500	Air Compressors_2013_500	32,936	0,393	1,313	4,268	0,005	0,137	0,137	568,3	0,035	0,015689655
Air Compressors	2013	501	750	Air Compressors_2013_750	51,584	0,399	1,313	4,406	0,005	0,14	0,14	568,299	0,036	0,016137931
Air Compressors	2013	751	1000	Air Compressors_2013_1000	84,725	0,482	1,639	5,883	0,005	0,17	0,17	568,299	0,043	0,019275862
Air Compressors	2014	6	15	Air Compressors_2014_15	2,324	0,891	3,723	5,445	0,008	0,341	0,341	568,3	0,08	0,035862069
Air Compressors	2014	16	25	Air Compressors_2014_25	5,008	0,96	2,78	5	0,007	0,291	0,291	568,299	0,086	0,038551724
Air Compressors	2014	26	50	Air Compressors_2014_50	16,691	2,076	6,181	5,421	0,007	0,505	0,505	568,299	0,187	0,083827586
Air Compressors	2014	51	120	Air Compressors_2014_120	15,28	0,901	3,88	5,608	0,006	0,495	0,495	568,299	0,081	0,036310345
Air Compressors	2014	121	175	Air Compressors_2014_175	19,856	0,621	3,227	4,973	0,006	0,272	0,272	568,299	0,056	0,025103448
Air Compressors	2014	176	250	Air Compressors_2014_250	19,194	0,405	1,237	4,399	0,006	0,134	0,134	568,299	0,036	0,016137931
Air Compressors	2014	251	500	Air Compressors_2014_500	31,25	0,373	1,249	3,855	0,005	0,125	0,125	568,299	0,033	0,014793103
Air Compressors	2014	501	750	Air Compressors_2014_750	48,868	0,378	1,249	3,991	0,005	0,128	0,128	568,299	0,034	0,015241379
Air Compressors	2014	751	1000	Air Compressors_2014_1000	78,19	0,445	1,493	5,512	0,005	0,157	0,157	568,3	0,04	0,017931034
Air Compressors	2015	6	15	Air Compressors_2015_15	2,191	0,84	3,658	5,196	0,008	0,311	0,311	568,299	0,075	0,03362069
Air Compressors	2015	16	25	Air Compressors_2015_25	4,662	0,894	2,666	4,89	0,007	0,27	0,27	568,299	0,08	0,035862069

Air Compressors	2015	26	50	Air Compressors_2015_50	15,015	1,868	5,968	5,223	0,007	0,459	0,459	568,299	0,168	0,075310345
Air Compressors	2015	51	120	Air Compressors_2015_120	13,925	0,821	3,84	5,19	0,006	0,446	0,446	568,299	0,074	0,033172414
Air Compressors	2015	121	175	Air Compressors_2015_175	18,243	0,571	3,218	4,504	0,006	0,245	0,245	568,299	0,051	0,022862069
Air Compressors	2015	176	250	Air Compressors_2015_250	18,067	0,381	1,207	3,967	0,006	0,121	0,121	568,299	0,034	0,015241379
Air Compressors	2015	251	500	Air Compressors_2015_500	29,662	0,354	1,198	3,455	0,005	0,113	0,113	568,3	0,032	0,014344828
Air Compressors	2015	501	750	Air Compressors_2015_750	46,316	0,358	1,198	3,586	0,005	0,116	0,116	568,299	0,032	0,014344828
Air Compressors	2015	751	1000	Air Compressors_2015_1000	71,885	0,409	1,37	5,157	0,005	0,142	0,142	568,299	0,036	0,016137931
Air Compressors	2016	6	15	Air Compressors_2016_15	2,109	0,809	3,622	5,023	0,008	0,289	0,289	568,299	0,073	0,032724138
Air Compressors	2016	16	25	Air Compressors_2016_25	4,462	0,855	2,604	4,803	0,007	0,255	0,255	568,299	0,077	0,034517241
Air Compressors	2016	26	50	Air Compressors_2016_50	13,429	1,67	5,779	5,042	0,007	0,415	0,415	568,299	0,15	0,067241379
Air Compressors	2016	51	120	Air Compressors_2016_120	12,618	0,744	3,804	4,79	0,006	0,397	0,397	568,299	0,067	0,030034483
Air Compressors	2016	121	175	Air Compressors_2016_175	16,69	0,522	3,211	4,052	0,006	0,219	0,219	568,299	0,047	0,021068966
Air Compressors	2016	176	250	Air Compressors_2016_250	17,023	0,359	1,182	3,553	0,006	0,109	0,109	568,299	0,032	0,014344828
Air Compressors	2016	251	500	Air Compressors_2016_500	28,188	0,337	1,155	3,08	0,005	0,102	0,102	568,299	0,03	0,013448276
Air Compressors	2016	501	750	Air Compressors_2016_750	43,972	0,34	1,155	3,201	0,005	0,104	0,104	568,299	0,03	0,013448276
Air Compressors	2016	751	1000	Air Compressors_2016_1000	67,278	0,383	1,295	4,854	0,005	0,131	0,131	568,299	0,034	0,015241379
Air Compressors	2017	6	15	Air Compressors_2017_15	2,05	0,786	3,599	4,887	0,008	0,272	0,272	568,299	0,07	0,03137931
Air Compressors	2017	16	25	Air Compressors_2017_25	4,327	0,83	2,564	4,729	0,007	0,243	0,243	568,299	0,074	0,033172414
Air Compressors	2017	26	50	Air Compressors_2017_50	11,908	1,481	5,604	4,871	0,007	0,371	0,371	568,299	0,133	0,05962069
Air Compressors	2017	51	120	Air Compressors_2017_120	11,385	0,671	3,772	4,412	0,006	0,35	0,35	568,299	0,06	0,026896552
Air Compressors	2017	121	175	Air Compressors_2017_175	15,244	0,477	3,207	3,627	0,006	0,194	0,194	568,299	0,043	0,019275862
Air Compressors	2017	176	250	Air Compressors_2017_250	16,09	0,339	1,162	3,163	0,006	0,098	0,098	568,299	0,03	0,013448276
Air Compressors	2017	251	500	Air Compressors_2017_500	26,901	0,321	1,123	2,755	0,005	0,092	0,092	568,299	0,029	0,013
Air Compressors	2017	501	750	Air Compressors_2017_750	41,87	0,323	1,123	2,845	0,005	0,094	0,094	568,299	0,029	0,013
Air Compressors	2017	751	1000	Air Compressors_2017_1000	63,572	0,362	1,246	4,583	0,005	0,121	0,121	568,299	0,032	0,014344828
Air Compressors	2018	6	15	Air Compressors_2018_15	1,998	0,766	3,58	4,762	0,008	0,256	0,256	568,299	0,069	0,030931034
Air Compressors	2018	16	25	Air Compressors_2018_25	4,211	0,807	2,531	4,661	0,007	0,232	0,232	568,3	0,072	0,032275862
Air Compressors	2018	26	50	Air Compressors_2018_50	10,449	1,3	5,439	4,707	0,007	0,329	0,329	568,299	0,117	0,052448276
Air Compressors	2018	51	120	Air Compressors_2018_120	10,218	0,603	3,744	4,05	0,006	0,304	0,304	568,3	0,054	0,024206897
Air Compressors	2018	121	175	Air Compressors_2018_175	13,906	0,435	3,205	3,228	0,006	0,17	0,17	568,299	0,039	0,017482759
Air Compressors	2018	176	250	Air Compressors_2018_250	15,223	0,321	1,146	2,797	0,006	0,087	0,087	568,3	0,029	0,013
Air Compressors	2018	251	500	Air Compressors_2018_500	25,723	0,307	1,101	2,465	0,005	0,083	0,083	568,299	0,027	0,012103448
Air Compressors	2018	501	750	Air Compressors_2018_750	39,953	0,309	1,101	2,533	0,005	0,084	0,084	568,299	0,027	0,012103448
Air Compressors	2018	751	1000	Air Compressors_2018_1000	60,205	0,343	1,21	4,325	0,005	0,111	0,111	568,299	0,03	0,013448276
Air Compressors	2019	6	15	Air Compressors_2019_15	1,951	0,748	3,562	4,647	0,008	0,241	0,241	568,299	0,067	0,030034483
Air Compressors	2019	16	25	Air Compressors_2019_25	4,106	0,787	2,501	4,596	0,007	0,222	0,222	568,299	0,071	0,031827586
Air Compressors	2019	26	50	Air Compressors_2019_50	9,076	1,129	5,283	4,546	0,007	0,287	0,287	568,299	0,101	0,045275862
Air Compressors	2019	51	120	Air Compressors_2019_120	9,123	0,538	3,718	3,706	0,006	0,26	0,26	568,299	0,048	0,021517241
Air Compressors	2019	121	175	Air Compressors_2019_175	12,833	0,401	3,204	2,874	0,006	0,15	0,15	568,299	0,036	0,016137931
Air Compressors	2019	176	250	Air Compressors_2019_250	14,416	0,304	1,132	2,469	0,006	0,078	0,078	568,299	0,027	0,012103448
Air Compressors	2019	251	500	Air Compressors_2019_500	24,559	0,293	1,086	2,193	0,005	0,075	0,075	568,299	0,026	0,011655172
Air Compressors	2019	501	750	Air Compressors_2019_750	38,104	0,294	1,086	2,247	0,005	0,076	0,076	568,299	0,026	0,011655172
Air Compressors	2019	751	1000	Air Compressors_2019_1000	56,984	0,324	1,182	4,073	0,005	0,102	0,102	568,299	0,029	0,013
Air Compressors	2020	6	15	Air Compressors_2020_15	1,907	0,731	3,546	4,542	0,008	0,227	0,227	568,299	0,066	0,029586207
Air Compressors	2020	16	25	Air Compressors_2020_25	4,009	0,769	2,473	4,538	0,007	0,212	0,212	568,3	0,069	0,030931034
Air Compressors	2020	26	50	Air Compressors_2020_50	8,048	1,001	5,164	4,397	0,007	0,25	0,25	568,299	0,09	0,040344828
Air Compressors	2020	51	120	Air Compressors_2020_120	8,287	0,489	3,698	3,4	0,006	0,224	0,224	568,299	0,044	0,019724138
Air Compressors	2020	121	175	Air Compressors_2020_175	11,957	0,374	3,203	2,558	0,006	0,133	0,133	568,299	0,033	0,014793103
Air Compressors	2020	176	250	Air Compressors_2020_250	13,668	0,288	1,121	2,172	0,006	0,069	0,069	568,299	0,026	0,011655172
Air Compressors	2020	251	500	Air Compressors_2020_500	23,406	0,279	1,076	1,935	0,005	0,067	0,067	568,299	0,025	0,011206897
Air Compressors	2020	501	750	Air Compressors_2020_750	36,303	0,28	1,076	1,982	0,005	0,067	0,067	568,299	0,025	0,011206897
Air Compressors	2020	751	1000	Air Compressors_2020_1000	53,87	0,306	1,158	3,828	0,005	0,093	0,093	568,3	0,027	0,012103448
Air Compressors	2021	6	15	Air Compressors_2021_15	1,87	0,717	3,531	4,462	0,008	0,214	0,214	568,299	0,064	0,028689655
Air Compressors	2021	16	25	Air Compressors_2021_25	3,923	0,752	2,446	4,497	0,007	0,201	0,201	568,299	0,067	0,030034483
Air Compressors	2021	26	50	Air Compressors_2021_50	7,136	0,887	5,021	4,221	0,007	0,212	0,212	568,299	0,08	0,035862069
Air Compressors	2021	51	120	Air Compressors_2021_120	7,502	0,442	3,67	3,083	0,006	0,19	0,19	568,299	0,039	0,017482759
Air Compressors	2021	121	175	Air Compressors_2021_175	10,967	0,343	3,192	2,218	0,006	0,115	0,115	568,299	0,03	0,013448276
Air Compressors	2021	176	250	Air Compressors_2021_250	12,728	0,268	1,108	1,859	0,006	0,06	0,06	568,299	0,024	0,010758621
Air Compressors	2021	251	500	Air Compressors_2021_500	21,887	0,261	1,064	1,663	0,005	0,058	0,058	568,299	0,023	0,010310345
Air Compressors	2021	501	750	Air Compressors_2021_750	33,933	0,262	1,064	1,699	0,005	0,058	0,058	568,299	0,023	0,010310345
Air Compressors	2021	751	1000	Air Compressors_2021_1000	49,951	0,284	1,134	3,565	0,005	0,082	0,082	568,3	0,025	0,011206897
Air Compressors	2022	6	15	Air Compressors_2022_15	1,844	0,707	3,519	4,408	0,008	0,203	0,203	568,299	0,063	0,028241379
Air Compressors	2022	16	25	Air Compressors_2022_25	3,857	0,739	2,426	4,47	0,007	0,193	0,193	568,299	0,066	0,029586207
Air Compressors	2022	26	50	Air Compressors_2022_50	6,549	0,814	4,959	4,093	0,007	0,183	0,183	568,299	0,073	0,032724138
Air Compressors	2022	51	120	Air Compressors_2022_120	7,001	0,413	3,662	2,844	0,006	0,165	0,165	568,299	0,037	0,016586207
Air Compressors	2022	121	175	Air Compressors_2022_175	10,29	0,322	3,194	1,959	0,006	0,101	0,101	568,299	0,029	0,013
Air Compressors	2022	176	250	Air Compressors_2022_250	12,099	0,255	1,102	1,617	0,006	0,052	0,052	568,3	0,023	0,010310345
Air Compressors	2022	251	500	Air Compressors_2022_500	20,881	0,249	1,059	1,472	0,005	0,051	0,051	568,299	0,022	0,009862069
Air Compressors	2022	501	750	Air Compressors_2022_750	32,363	0,25	1,059	1,502	0,005	0,051	0,051	568,299	0,022	0,009862069
Air Compressors	2022	751	1000	Air Compressors_2022_1000	47,338	0,269	1,117	3,378	0,005	0,075	0,075	568,3	0,024	0,010758621

Air Compressors	2023	6	15	Air Compressors_2023_15	1,82	0,698	3,508	4,359	0,008	0,194	0,194	568,299	0,063	0,028241379
Air Compressors	2023	16	25	Air Compressors_2023_25	3,798	0,728	2,407	4,447	0,007	0,186	0,186	568,299	0,065	0,029137931
Air Compressors	2023	26	50	Air Compressors_2023_50	6,056	0,753	4,913	3,975	0,007	0,156	0,156	568,299	0,067	0,030034483
Air Compressors	2023	51	120	Air Compressors_2023_120	6,568	0,387	3,657	2,631	0,006	0,143	0,143	568,299	0,034	0,015241379
Air Compressors	2023	121	175	Air Compressors_2023_175	9,693	0,303	3,197	1,748	0,006	0,089	0,089	568,299	0,027	0,012103448
Air Compressors	2023	176	250	Air Compressors_2023_250	11,532	0,243	1,099	1,42	0,006	0,045	0,045	568,299	0,021	0,009413793
Air Compressors	2023	251	500	Air Compressors_2023_500	19,964	0,238	1,055	1,305	0,005	0,044	0,044	568,299	0,021	0,009413793
Air Compressors	2023	501	750	Air Compressors_2023_750	30,933	0,239	1,055	1,331	0,005	0,044	0,044	568,299	0,021	0,009413793
Air Compressors	2023	751	1000	Air Compressors_2023_1000	44,985	0,256	1,102	3,221	0,005	0,068	0,068	568,299	0,023	0,010310345
Air Compressors	2024	6	15	Air Compressors_2024_15	1,799	0,69	3,499	4,316	0,008	0,188	0,188	568,3	0,062	0,027793103
Air Compressors	2024	16	25	Air Compressors_2024_25	3,746	0,718	2,39	4,426	0,007	0,181	0,181	568,3	0,064	0,028689655
Air Compressors	2024	26	50	Air Compressors_2024_50	5,647	0,702	4,88	3,864	0,007	0,135	0,135	568,299	0,063	0,028241379
Air Compressors	2024	51	120	Air Compressors_2024_120	6,194	0,365	3,655	2,461	0,006	0,123	0,123	568,299	0,032	0,014344828
Air Compressors	2024	121	175	Air Compressors_2024_175	9,143	0,286	3,202	1,561	0,006	0,077	0,077	568,299	0,025	0,011206897
Air Compressors	2024	176	250	Air Compressors_2024_250	10,986	0,232	1,096	1,247	0,006	0,039	0,039	568,299	0,02	0,008965517
Air Compressors	2024	251	500	Air Compressors_2024_500	19,07	0,228	1,053	1,148	0,005	0,038	0,038	568,299	0,02	0,008965517
Air Compressors	2024	501	750	Air Compressors_2024_750	29,542	0,228	1,053	1,171	0,005	0,038	0,038	568,299	0,02	0,008965517
Air Compressors	2024	751	1000	Air Compressors_2024_1000	42,762	0,243	1,09	3,082	0,005	0,061	0,061	568,299	0,021	0,009413793
Air Compressors	2025	6	15	Air Compressors_2025_15	1,781	0,683	3,491	4,278	0,008	0,183	0,183	568,3	0,061	0,027344828
Air Compressors	2025	16	25	Air Compressors_2025_25	3,701	0,709	2,376	4,407	0,007	0,177	0,177	568,299	0,064	0,028689655
Air Compressors	2025	26	50	Air Compressors_2025_50	5,297	0,659	4,851	3,755	0,007	0,116	0,116	568,299	0,059	0,026448276
Air Compressors	2025	51	120	Air Compressors_2025_120	5,855	0,345	3,653	2,313	0,006	0,104	0,104	568,299	0,031	0,013896552
Air Compressors	2025	121	175	Air Compressors_2025_175	8,602	0,269	3,205	1,383	0,006	0,065	0,065	568,299	0,024	0,010758621
Air Compressors	2025	176	250	Air Compressors_2025_250	10,451	0,22	1,094	1,086	0,006	0,033	0,033	568,299	0,019	0,008517241
Air Compressors	2025	251	500	Air Compressors_2025_500	18,188	0,217	1,051	1,001	0,005	0,032	0,032	568,299	0,019	0,008517241
Air Compressors	2025	501	750	Air Compressors_2025_750	28,169	0,217	1,051	1,021	0,005	0,032	0,032	568,299	0,019	0,008517241
Air Compressors	2025	751	1000	Air Compressors_2025_1000	40,592	0,231	1,079	2,954	0,005	0,055	0,055	568,299	0,02	0,008965517
Air Compressors	2030	6	15	Air Compressors_2030_15	1,73	0,663	3,47	4,164	0,008	0,166	0,166	568,299	0,059	0,026448276
Air Compressors	2030	16	25	Air Compressors_2030_25	3,582	0,687	2,34	4,347	0,007	0,165	0,165	568,299	0,061	0,027344828
Air Compressors	2030	26	50	Air Compressors_2030_50	4,073	0,506	4,712	3,34	0,007	0,046	0,046	568,299	0,045	0,020172414
Air Compressors	2030	51	120	Air Compressors_2030_120	4,485	0,264	3,63	1,729	0,006	0,041	0,041	568,299	0,023	0,010310345
Air Compressors	2030	121	175	Air Compressors_2030_175	6,186	0,193	3,205	0,633	0,006	0,027	0,027	568,299	0,017	0,00762069
Air Compressors	2030	176	250	Air Compressors_2030_250	8,495	0,179	1,092	0,529	0,006	0,018	0,018	568,299	0,016	0,007172414
Air Compressors	2030	251	500	Air Compressors_2030_500	14,937	0,178	1,048	0,499	0,005	0,017	0,017	568,299	0,016	0,007172414
Air Compressors	2030	501	750	Air Compressors_2030_750	23,104	0,178	1,048	0,505	0,005	0,017	0,017	568,3	0,016	0,007172414
Air Compressors	2030	751	1000	Air Compressors_2030_1000	32,103	0,182	1,049	2,6	0,005	0,033	0,033	568,299	0,016	0,007172414
Air Compressors	2035	6	15	Air Compressors_2035_15	1,724	0,661	3,469	4,143	0,008	0,162	0,162	568,3	0,059	0,026448276
Air Compressors	2035	16	25	Air Compressors_2035_25	3,574	0,685	2,339	4,332	0,007	0,162	0,162	568,299	0,061	0,027344828
Air Compressors	2035	26	50	Air Compressors_2035_50	3,722	0,463	4,674	3,215	0,007	0,023	0,023	568,299	0,041	0,01837931
Air Compressors	2035	51	120	Air Compressors_2035_120	4,047	0,238	3,623	1,53	0,006	0,02	0,02	568,299	0,021	0,009413793
Air Compressors	2035	121	175	Air Compressors_2035_175	5,429	0,17	3,205	0,391	0,006	0,015	0,015	568,3	0,015	0,006724138
Air Compressors	2035	176	250	Air Compressors_2035_250	7,862	0,166	1,091	0,347	0,006	0,012	0,012	568,299	0,014	0,006275862
Air Compressors	2035	251	500	Air Compressors_2035_500	13,882	0,166	1,048	0,343	0,005	0,012	0,012	568,299	0,014	0,006275862
Air Compressors	2035	501	750	Air Compressors_2035_750	21,455	0,166	1,048	0,344	0,005	0,012	0,012	568,299	0,014	0,006275862
Air Compressors	2035	751	1000	Air Compressors_2035_1000	29,363	0,167	1,048	2,473	0,005	0,026	0,026	568,299	0,015	0,006724138
Air Compressors	2040	6	15	Air Compressors_2040_15	1,724	0,661	3,469	4,142	0,008	0,161	0,161	568,299	0,059	0,026448276
Air Compressors	2040	16	25	Air Compressors_2040_25	3,574	0,685	2,339	4,332	0,007	0,161	0,161	568,3	0,061	0,027344828
Air Compressors	2040	26	50	Air Compressors_2040_50	3,683	0,458	4,659	3,159	0,007	0,016	0,016	568,3	0,041	0,01837931
Air Compressors	2040	51	120	Air Compressors_2040_120	3,94	0,232	3,619	1,468	0,006	0,015	0,015	568,299	0,02	0,008965517
Air Compressors	2040	121	175	Air Compressors_2040_175	5,155	0,161	3,201	0,307	0,006	0,012	0,012	568,299	0,014	0,006275862
Air Compressors	2040	176	250	Air Compressors_2040_250	7,58	0,16	1,09	0,291	0,006	0,01	0,01	568,299	0,014	0,006275862
Air Compressors	2040	251	500	Air Compressors_2040_500	13,386	0,16	1,047	0,291	0,005	0,01	0,01	568,3	0,014	0,006275862
Air Compressors	2040	501	750	Air Compressors_2040_750	20,688	0,16	1,047	0,291	0,005	0,01	0,01	568,299	0,014	0,006275862
Air Compressors	2040	751	1000	Air Compressors_2040_1000	28,179	0,16	1,047	2,439	0,005	0,023	0,023	568,299	0,014	0,006275862
Bore/Drill Rigs	1990	6	15	Bore/Drill Rigs_1990_15	4,968	1,804	4,999	9,999	1,049	0,975	0,975	568,299	0,162	0,07262069
Bore/Drill Rigs	1990	16	25	Bore/Drill Rigs_1990_25	9,418	2,213	4,999	6,919	0,855	0,741	0,741	568,299	0,199	0,089206897
Bore/Drill Rigs	1990	26	50	Bore/Drill Rigs_1990_50	34,076	4,124	8,505	7,685	0,871	1,134	1,134	568,299	0,372	0,166758621
Bore/Drill Rigs	1990	51	120	Bore/Drill Rigs_1990_120	42,911	2,09	5,23	13,647	0,791	1,172	1,172	568,299	0,188	0,084275862
Bore/Drill Rigs	1990	121	175	Bore/Drill Rigs_1990_175	53,24	1,417	4,578	12,365	0,758	0,749	0,749	568,299	0,127	0,056931034
Bore/Drill Rigs	1990	176	250	Bore/Drill Rigs_1990_250	70,987	1,417	4,578	12,365	0,758	0,749	0,749	568,299	0,127	0,056931034
Bore/Drill Rigs	1990	251	500	Bore/Drill Rigs_1990_500	105,966	1,278	8,788	11,861	0,662	0,658	0,658	568,299	0,115	0,051551724
Bore/Drill Rigs	1990	501	750	Bore/Drill Rigs_1990_750	209,372	1,278	8,788	11,861	1,018	0,67	0,67	568,3	0,115	0,051551724
Bore/Drill Rigs	1990	751	1000	Bore/Drill Rigs_1990_1000	313,129	1,267	8,788	11,861	1,018	0,656	0,656	568,3	0,114	0,051103448
Bore/Drill Rigs	2000	6	15	Bore/Drill Rigs_2000_15	4,063	1,475	4,49	8,242	0,079	0,676	0,676	568,299	0,133	0,05962069
Bore/Drill Rigs	2000	16	25	Bore/Drill Rigs_2000_25	8,334	1,958	4,53	6,358	0,065	0,563	0,563	568,299	0,176	0,078896552
Bore/Drill Rigs	2000	26	50	Bore/Drill Rigs_2000_50	27,226	3,295	7,058	6,48	0,066	0,748	0,748	568,299	0,297	0,133137931
Bore/Drill Rigs	2000	51	120	Bore/Drill Rigs_2000_120	30,002	1,461	3,947	8,27	0,06	0,726	0,726	568,299	0,131	0,058724138
Bore/Drill Rigs	2000	121	175	Bore/Drill Rigs_2000_175	37,634	1,002	3,062	7,789	0,057	0,405	0,405	568,3	0,09	0,040344828
Bore/Drill Rigs	2000	176	250	Bore/Drill Rigs_2000_250	32,523	0,649	1,698	7,203	0,057	0,238	0,238	568,3	0,058	0,026
Bore/Drill Rigs	2000	251	500	Bore/Drill Rigs_2000_500	51,06	0,616	1,728	6,993	0,05	0,224	0,224	568,299	0,055	0,024655172
Bore/Drill Rigs	2000	501	750	Bore/Drill Rigs_2000_750	100,887	0,616	1,728	6,993	0,052	0,224	0,224	568,299	0,055	0,024655172

Bore/Drill Rigs	2000	751	1000	Bore/Drill Rigs_2000_1000	199,748	0,808	2,73	8,005	0,052	0,282	0,282	568,299	0,072	0,032275862
Bore/Drill Rigs	2005	6	15	Bore/Drill Rigs_2005_15	2,109	0,766	3,469	5,228	0,079	0,361	0,361	568,299	0,069	0,030931034
Bore/Drill Rigs	2005	16	25	Bore/Drill Rigs_2005_25	3,913	0,919	2,642	5,412	0,065	0,347	0,347	568,299	0,082	0,036758621
Bore/Drill Rigs	2005	26	50	Bore/Drill Rigs_2005_50	20,086	2,431	5,897	5,697	0,066	0,625	0,625	568,299	0,219	0,098172414
Bore/Drill Rigs	2005	51	120	Bore/Drill Rigs_2005_120	24,211	1,179	3,812	6,895	0,06	0,64	0,64	568,3	0,106	0,047517241
Bore/Drill Rigs	2005	121	175	Bore/Drill Rigs_2005_175	27,251	0,725	3,035	6,246	0,057	0,328	0,328	568,299	0,065	0,029137931
Bore/Drill Rigs	2005	176	250	Bore/Drill Rigs_2005_250	19,806	0,395	1,094	5,8	0,057	0,145	0,145	568,299	0,035	0,015689655
Bore/Drill Rigs	2005	251	500	Bore/Drill Rigs_2005_500	27,527	0,332	1,068	5,051	0,05	0,133	0,133	568,299	0,029	0,013
Bore/Drill Rigs	2005	501	750	Bore/Drill Rigs_2005_750	58,103	0,354	1,068	5,347	0,052	0,138	0,138	568,299	0,032	0,014344828
Bore/Drill Rigs	2005	751	1000	Bore/Drill Rigs_2005_1000	132,307	0,535	1,427	6,8	0,052	0,183	0,183	568,299	0,048	0,021517241
Bore/Drill Rigs	2010	6	15	Bore/Drill Rigs_2010_15	1,052412	0,884	4,58435	5,42137	0,006	0,406	0,374	604,3903	0,176	0,078896552
Bore/Drill Rigs	2010	16	25	Bore/Drill Rigs_2010_25	1,052412	0,884	4,58435	5,42137	0,006	0,406	0,374	604,3903	0,176	0,078896552
Bore/Drill Rigs	2010	26	50	Bore/Drill Rigs_2010_50	1,052412	0,884	4,58435	5,42137	0,006	0,406	0,374	604,3903	0,176	0,078896552
Bore/Drill Rigs	2010	51	120	Bore/Drill Rigs_2010_120	0,45108	0,379	3,31487	4,84273	0,005	0,313	0,288	505,1218	0,147	0,065896552
Bore/Drill Rigs	2010	121	175	Bore/Drill Rigs_2010_175	0,420915	0,354	3,03422	4,77962	0,005	0,231	0,213	533,3654	0,155	0,069482759
Bore/Drill Rigs	2010	176	250	Bore/Drill Rigs_2010_250	0,301395	0,253	1,2308	4,60173	0,005	0,139	0,128	525,165	0,153	0,068586207
Bore/Drill Rigs	2010	251	500	Bore/Drill Rigs_2010_500	0,270831	0,228	1,39755	3,90774	0,005	0,131	0,12	517,3193	0,151	0,067689655
Bore/Drill Rigs	2010	501	750	Bore/Drill Rigs_2010_750	0,19905	0,167	1,08296	3,03556	0,005	0,108	0,099	533,5969	0,155	0,069482759
Bore/Drill Rigs	2010	751	1000	Bore/Drill Rigs_2010_1000	0,189693	0,159	0,96001	4,32965	0,005	0,099	0,091	524,3394	0,153	0,068586207
Bore/Drill Rigs	2011	6	15	Bore/Drill Rigs_2011_15	1,019273	0,856	4,60411	5,41672	0,006	0,4	0,368	602,9382	0,176	0,078896552
Bore/Drill Rigs	2011	16	25	Bore/Drill Rigs_2011_25	1,019273	0,856	4,60411	5,41672	0,006	0,4	0,368	602,9382	0,176	0,078896552
Bore/Drill Rigs	2011	26	50	Bore/Drill Rigs_2011_50	1,019273	0,856	4,60411	5,41672	0,006	0,4	0,368	602,9382	0,176	0,078896552
Bore/Drill Rigs	2011	51	120	Bore/Drill Rigs_2011_120	0,435142	0,366	3,32121	4,72727	0,005	0,303	0,279	504,2171	0,147	0,065896552
Bore/Drill Rigs	2011	121	175	Bore/Drill Rigs_2011_175	0,404145	0,34	3,03462	4,59259	0,005	0,219	0,202	531,8097	0,155	0,069482759
Bore/Drill Rigs	2011	176	250	Bore/Drill Rigs_2011_250	0,289986	0,244	1,21102	4,34748	0,005	0,132	0,122	522,3643	0,152	0,068137931
Bore/Drill Rigs	2011	251	500	Bore/Drill Rigs_2011_500	0,264468	0,222	1,36917	3,72448	0,005	0,125	0,115	512,0559	0,149	0,066793103
Bore/Drill Rigs	2011	501	750	Bore/Drill Rigs_2011_750	0,195451	0,164	1,06361	2,89424	0,005	0,098	0,09	532,4717	0,155	0,069482759
Bore/Drill Rigs	2011	751	1000	Bore/Drill Rigs_2011_1000	0,200744	0,169	0,96855	4,35634	0,005	0,101	0,093	523,0129	0,153	0,068586207
Bore/Drill Rigs	2012	6	15	Bore/Drill Rigs_2012_15	1,043679	0,877	4,70758	5,45218	0,006	0,406	0,374	601,7336	0,176	0,078896552
Bore/Drill Rigs	2012	16	25	Bore/Drill Rigs_2012_25	1,043679	0,877	4,70758	5,45218	0,006	0,406	0,374	601,7336	0,176	0,078896552
Bore/Drill Rigs	2012	26	50	Bore/Drill Rigs_2012_50	1,043679	0,877	4,70758	5,45218	0,006	0,406	0,374	601,7336	0,176	0,078896552
Bore/Drill Rigs	2012	51	120	Bore/Drill Rigs_2012_120	0,439737	0,37	3,34211	4,70854	0,005	0,302	0,278	503,4212	0,147	0,065896552
Bore/Drill Rigs	2012	121	175	Bore/Drill Rigs_2012_175	0,401496	0,337	3,05178	4,52801	0,005	0,215	0,198	531,6414	0,156	0,069931034
Bore/Drill Rigs	2012	176	250	Bore/Drill Rigs_2012_250	0,299105	0,251	1,23628	4,31574	0,005	0,134	0,123	520,9621	0,152	0,068137931
Bore/Drill Rigs	2012	251	500	Bore/Drill Rigs_2012_500	0,271498	0,228	1,3973	3,71268	0,005	0,124	0,115	511,0099	0,149	0,066793103
Bore/Drill Rigs	2012	501	750	Bore/Drill Rigs_2012_750	0,195855	0,165	1,06675	2,78397	0,005	0,094	0,086	530,0759	0,155	0,069482759
Bore/Drill Rigs	2012	751	1000	Bore/Drill Rigs_2012_1000	0,210392	0,177	0,976	4,3794	0,005	0,103	0,094	521,6821	0,153	0,068586207
Bore/Drill Rigs	2013	6	15	Bore/Drill Rigs_2013_15	1,019153	0,856	4,71588	5,44353	0,006	0,398	0,366	598,6307	0,176	0,078896552
Bore/Drill Rigs	2013	16	25	Bore/Drill Rigs_2013_25	1,019153	0,856	4,71588	5,44353	0,006	0,398	0,366	598,6307	0,176	0,078896552
Bore/Drill Rigs	2013	26	50	Bore/Drill Rigs_2013_50	1,019153	0,856	4,71588	5,44353	0,006	0,398	0,366	598,6307	0,176	0,078896552
Bore/Drill Rigs	2013	51	120	Bore/Drill Rigs_2013_120	0,417421	0,351	3,33685	4,52552	0,005	0,279	0,257	501,3795	0,147	0,065896552
Bore/Drill Rigs	2013	121	175	Bore/Drill Rigs_2013_175	0,380511	0,32	3,04123	4,3027	0,005	0,199	0,183	527,5089	0,155	0,069482759
Bore/Drill Rigs	2013	176	250	Bore/Drill Rigs_2013_250	0,286183	0,24	1,21872	4,0183	0,005	0,124	0,114	517,8225	0,152	0,068137931
Bore/Drill Rigs	2013	251	500	Bore/Drill Rigs_2013_500	0,260559	0,219	1,35236	3,49492	0,005	0,115	0,106	507,7707	0,149	0,066793103
Bore/Drill Rigs	2013	501	750	Bore/Drill Rigs_2013_750	0,192576	0,162	1,07935	2,57636	0,005	0,088	0,081	527,7286	0,155	0,069482759
Bore/Drill Rigs	2013	751	1000	Bore/Drill Rigs_2013_1000	0,160352	0,135	0,96188	3,46658	0,005	0,082	0,075	519,8525	0,153	0,068586207
Bore/Drill Rigs	2014	6	15	Bore/Drill Rigs_2014_15	0,992547	0,834	4,69064	5,33236	0,006	0,382	0,351	591,4418	0,175	0,078448276
Bore/Drill Rigs	2014	16	25	Bore/Drill Rigs_2014_25	0,992547	0,834	4,69064	5,33236	0,006	0,382	0,351	591,4418	0,175	0,078448276
Bore/Drill Rigs	2014	26	50	Bore/Drill Rigs_2014_50	0,992547	0,834	4,69064	5,33236	0,006	0,382	0,351	591,4418	0,175	0,078448276
Bore/Drill Rigs	2014	51	120	Bore/Drill Rigs_2014_120	0,379477	0,319	3,32686	4,19515	0,005	0,249	0,229	501,365	0,148	0,066344828
Bore/Drill Rigs	2014	121	175	Bore/Drill Rigs_2014_175	0,366384	0,308	3,04026	4,06571	0,005	0,186	0,171	524,0522	0,155	0,069482759
Bore/Drill Rigs	2014	176	250	Bore/Drill Rigs_2014_250	0,258607	0,217	1,17442	3,52453	0,005	0,105	0,097	512,3362	0,151	0,067689655
Bore/Drill Rigs	2014	251	500	Bore/Drill Rigs_2014_500	0,240166	0,202	1,239	3,18617	0,005	0,101	0,093	506,1536	0,15	0,067241379
Bore/Drill Rigs	2014	501	750	Bore/Drill Rigs_2014_750	0,186731	0,157	1,08678	2,37324	0,005	0,08	0,074	525,2397	0,155	0,069482759
Bore/Drill Rigs	2014	751	1000	Bore/Drill Rigs_2014_1000	0,12496	0,105	0,95104	2,98435	0,005	0,058	0,054	516,5998	0,153	0,068586207
Bore/Drill Rigs	2015	6	15	Bore/Drill Rigs_2015_15	1,007942	0,847	4,73461	5,30345	0,006	0,379	0,349	585,1707	0,175	0,078448276
Bore/Drill Rigs	2015	16	25	Bore/Drill Rigs_2015_25	1,007942	0,847	4,73461	5,30345	0,006	0,379	0,349	585,1707	0,175	0,078448276
Bore/Drill Rigs	2015	26	50	Bore/Drill Rigs_2015_50	1,007942	0,847	4,73461	5,30345	0,006	0,379	0,349	585,1707	0,175	0,078448276
Bore/Drill Rigs	2015	51	120	Bore/Drill Rigs_2015_120	0,378573	0,318	3,3349	4,02775	0,005	0,239	0,22	496,9494	0,148	0,066344828
Bore/Drill Rigs	2015	121	175	Bore/Drill Rigs_2015_175	0,359562	0,302	3,03526	3,90422	0,005	0,176	0,162	517,2068	0,154	0,069034483
Bore/Drill Rigs	2015	176	250	Bore/Drill Rigs_2015_250	0,253803	0,213	1,17834	3,3245	0,005	0,1	0,092	506,5047	0,151	0,067689655
Bore/Drill Rigs	2015	251	500	Bore/Drill Rigs_2015_500	0,237097	0,199	1,25564	3,00307	0,005	0,096	0,088	499,9023	0,149	0,066793103
Bore/Drill Rigs	2015	501	750	Bore/Drill Rigs_2015_750	0,19253	0,162	1,10541	2,37558	0,005	0,081	0,074	520,4733	0,155	0,069482759
Bore/Drill Rigs	2015	751	1000	Bore/Drill Rigs_2015_1000	0,130029	0,109	0,95583	2,99386	0,005	0,059	0,054	511,2533	0,153	0,068586207
Bore/Drill Rigs	2016	6	15	Bore/Drill Rigs_2016_15	1,034535	0,869	4,79659	5,29821	0,006	0,383	0,352	579,3262	0,175	0,078448276
Bore/Drill Rigs	2016	16	25	Bore/Drill Rigs_2016_25	1,034535	0,869	4,79659	5,29821	0,006	0,383	0,352	579,3262	0,175	0,078448276
Bore/Drill Rigs	2016	26	50	Bore/Drill Rigs_2016_50	1,034535	0,869	4,79659	5,29821	0,006	0,383	0,352	579,3262	0,175	0,078448276
Bore/Drill Rigs	2016	51	120	Bore/Drill Rigs_2016_120	0,365397	0,307	3,32648	3,82088	0,005	0,221	0,204	491,6548	0,148	0,066344828
Bore/Drill Rigs	2016	121	175	Bore/Drill Rigs_2016_175	0,33987	0,286	3,02337	3,61582	0,005	0,162	0,149	511,4327	0,154	0,069034483
Bore/Drill Rigs	2016	176	250	Bore/Drill Rigs_2016_250	0,229144	0,193	1,13299	2,9021	0,005	0,085	0,078	502,128	0,151	0,067689655
Bore/Drill Rigs	2016	251	500	Bore/Drill Rigs_2016_500	0,203588	0,171	1,13338	2,50955	0,005	0,077	0,071	494,7606	0,149	0,066793103
Bore/Drill Rigs	2016	501	750	Bore/Drill Rigs_2016_750	0,182018	0,153	1,11952	2,16636	0,005	0,072	0,066	514,8829	0,155	0,069482759

Bore/Drill Rigs	2016	751	1000	Bore/Drill Rigs_2016_1000	0,137307	0,115	0,96409	3,00833	0,005	0,059	0,055	505,9997	0,153	0,068586207
Bore/Drill Rigs	2017	6	15	Bore/Drill Rigs_2017_15	0,957137	0,804	4,65158	5,06335	0,006	0,351	0,323	563,9173	0,173	0,077551724
Bore/Drill Rigs	2017	16	25	Bore/Drill Rigs_2017_25	0,957137	0,804	4,65158	5,06335	0,006	0,351	0,323	563,9173	0,173	0,077551724
Bore/Drill Rigs	2017	26	50	Bore/Drill Rigs_2017_50	0,957137	0,804	4,65158	5,06335	0,006	0,351	0,323	563,9173	0,173	0,077551724
Bore/Drill Rigs	2017	51	120	Bore/Drill Rigs_2017_120	0,354597	0,298	3,33142	3,68536	0,005	0,211	0,194	485,322	0,149	0,066793103
Bore/Drill Rigs	2017	121	175	Bore/Drill Rigs_2017_175	0,290928	0,244	3,0013	2,98245	0,005	0,131	0,121	503,7704	0,154	0,069034483
Bore/Drill Rigs	2017	176	250	Bore/Drill Rigs_2017_250	0,20647	0,173	1,1021	2,5215	0,005	0,072	0,067	494,1381	0,151	0,067689655
Bore/Drill Rigs	2017	251	500	Bore/Drill Rigs_2017_500	0,197407	0,166	1,11891	2,36747	0,005	0,072	0,067	489,4612	0,15	0,067241379
Bore/Drill Rigs	2017	501	750	Bore/Drill Rigs_2017_750	0,184153	0,155	1,13653	2,15656	0,005	0,071	0,066	505,1248	0,155	0,069482759
Bore/Drill Rigs	2017	751	1000	Bore/Drill Rigs_2017_1000	0,143503	0,121	0,97127	3,02051	0,005	0,06	0,055	498,1225	0,153	0,068586207
Bore/Drill Rigs	2018	6	15	Bore/Drill Rigs_2018_15	0,9127	0,767	4,56857	4,86917	0,005	0,329	0,303	554,2038	0,173	0,077551724
Bore/Drill Rigs	2018	16	25	Bore/Drill Rigs_2018_25	0,9127	0,767	4,56857	4,86917	0,005	0,329	0,303	554,2038	0,173	0,077551724
Bore/Drill Rigs	2018	26	50	Bore/Drill Rigs_2018_50	0,9127	0,767	4,56857	4,86917	0,005	0,329	0,303	554,2038	0,173	0,077551724
Bore/Drill Rigs	2018	51	120	Bore/Drill Rigs_2018_120	0,320098	0,269	3,32325	3,39962	0,005	0,184	0,17	479,6719	0,149	0,066793103
Bore/Drill Rigs	2018	121	175	Bore/Drill Rigs_2018_175	0,241793	0,203	2,96107	2,35662	0,005	0,103	0,095	495,0734	0,154	0,069034483
Bore/Drill Rigs	2018	176	250	Bore/Drill Rigs_2018_250	0,183927	0,155	1,07328	2,15308	0,005	0,061	0,056	484,5605	0,151	0,067689655
Bore/Drill Rigs	2018	251	500	Bore/Drill Rigs_2018_500	0,160513	0,135	1,03203	1,74562	0,005	0,052	0,048	485,6893	0,151	0,067689655
Bore/Drill Rigs	2018	501	750	Bore/Drill Rigs_2018_750	0,14994	0,126	1,00559	1,67873	0,005	0,054	0,05	489,7301	0,152	0,068137931
Bore/Drill Rigs	2018	751	1000	Bore/Drill Rigs_2018_1000	0,149052	0,125	0,97772	3,03153	0,005	0,06	0,056	490,2427	0,153	0,068586207
Bore/Drill Rigs	2019	6	15	Bore/Drill Rigs_2019_15	0,858717	0,722	4,49723	4,71795	0,005	0,303	0,278	545,293	0,173	0,077551724
Bore/Drill Rigs	2019	16	25	Bore/Drill Rigs_2019_25	0,858717	0,722	4,49723	4,71795	0,005	0,303	0,278	545,293	0,173	0,077551724
Bore/Drill Rigs	2019	26	50	Bore/Drill Rigs_2019_50	0,858717	0,722	4,49723	4,71795	0,005	0,303	0,278	545,293	0,173	0,077551724
Bore/Drill Rigs	2019	51	120	Bore/Drill Rigs_2019_120	0,317934	0,267	3,33202	3,32102	0,005	0,18	0,166	472,4527	0,149	0,066793103
Bore/Drill Rigs	2019	121	175	Bore/Drill Rigs_2019_175	0,215784	0,181	2,95563	2,01775	0,005	0,088	0,081	487,3552	0,154	0,069034483
Bore/Drill Rigs	2019	176	250	Bore/Drill Rigs_2019_250	0,170614	0,143	1,06058	1,8943	0,005	0,054	0,049	475,7896	0,151	0,067689655
Bore/Drill Rigs	2019	251	500	Bore/Drill Rigs_2019_500	0,153732	0,129	1,03449	1,55098	0,005	0,048	0,044	477,0462	0,151	0,067689655
Bore/Drill Rigs	2019	501	750	Bore/Drill Rigs_2019_750	0,138617	0,116	0,97074	1,44865	0,005	0,048	0,044	481,8363	0,152	0,068137931
Bore/Drill Rigs	2019	751	1000	Bore/Drill Rigs_2019_1000	0,153944	0,129	0,98342	3,04139	0,005	0,061	0,056	482,3593	0,153	0,068586207
Bore/Drill Rigs	2020	6	15	Bore/Drill Rigs_2020_15	0,851825	0,716	4,51013	4,6451	0,006	0,294	0,271	535,2948	0,173	0,077551724
Bore/Drill Rigs	2020	16	25	Bore/Drill Rigs_2020_25	0,851825	0,716	4,51013	4,6451	0,006	0,294	0,271	535,2948	0,173	0,077551724
Bore/Drill Rigs	2020	26	50	Bore/Drill Rigs_2020_50	0,851825	0,716	4,51013	4,6451	0,006	0,294	0,271	535,2948	0,173	0,077551724
Bore/Drill Rigs	2020	51	120	Bore/Drill Rigs_2020_120	0,292949	0,246	3,32347	3,06601	0,005	0,159	0,146	463,5827	0,15	0,067241379
Bore/Drill Rigs	2020	121	175	Bore/Drill Rigs_2020_175	0,207426	0,174	2,96948	1,87149	0,005	0,082	0,076	477,722	0,155	0,069482759
Bore/Drill Rigs	2020	176	250	Bore/Drill Rigs_2020_250	0,169462	0,142	1,06766	1,80732	0,005	0,052	0,048	466,8342	0,151	0,067689655
Bore/Drill Rigs	2020	251	500	Bore/Drill Rigs_2020_500	0,148188	0,125	1,01263	1,40938	0,005	0,045	0,041	466,8219	0,151	0,067689655
Bore/Drill Rigs	2020	501	750	Bore/Drill Rigs_2020_750	0,129293	0,109	0,97413	1,23085	0,005	0,041	0,038	473,6679	0,153	0,068586207
Bore/Drill Rigs	2020	751	1000	Bore/Drill Rigs_2020_1000	0,158163	0,133	0,98839	3,05008	0,005	0,061	0,056	471,8492	0,153	0,068586207
Bore/Drill Rigs	2021	6	15	Bore/Drill Rigs_2021_15	0,845639	0,711	4,54836	4,63432	0,006	0,291	0,268	535,3782	0,173	0,077551724
Bore/Drill Rigs	2021	16	25	Bore/Drill Rigs_2021_25	0,845639	0,711	4,54836	4,63432	0,006	0,291	0,268	535,3782	0,173	0,077551724
Bore/Drill Rigs	2021	26	50	Bore/Drill Rigs_2021_50	0,845639	0,711	4,54836	4,63432	0,006	0,291	0,268	535,3782	0,173	0,077551724
Bore/Drill Rigs	2021	51	120	Bore/Drill Rigs_2021_120	0,258162	0,217	3,30573	2,73675	0,005	0,131	0,12	464,9725	0,15	0,067241379
Bore/Drill Rigs	2021	121	175	Bore/Drill Rigs_2021_175	0,183454	0,154	2,9614	1,5983	0,005	0,07	0,064	477,0482	0,154	0,069034483
Bore/Drill Rigs	2021	176	250	Bore/Drill Rigs_2021_250	0,157647	0,132	1,06418	1,55102	0,005	0,047	0,043	467,9916	0,151	0,067689655
Bore/Drill Rigs	2021	251	500	Bore/Drill Rigs_2021_500	0,139268	0,117	1,01479	1,22069	0,005	0,041	0,038	469,8158	0,152	0,068137931
Bore/Drill Rigs	2021	501	750	Bore/Drill Rigs_2021_750	0,116134	0,098	0,97176	0,95517	0,005	0,033	0,031	474,079	0,153	0,068586207
Bore/Drill Rigs	2021	751	1000	Bore/Drill Rigs_2021_1000	0,161679	0,136	0,99261	3,05759	0,005	0,061	0,057	471,8158	0,153	0,068586207
Bore/Drill Rigs	2022	6	15	Bore/Drill Rigs_2022_15	0,751445	0,631	4,33356	4,28474	0,005	0,241	0,221	529,8703	0,171	0,076655172
Bore/Drill Rigs	2022	16	25	Bore/Drill Rigs_2022_25	0,751445	0,631	4,33356	4,28474	0,005	0,241	0,221	529,8703	0,171	0,076655172
Bore/Drill Rigs	2022	26	50	Bore/Drill Rigs_2022_50	0,751445	0,631	4,33356	4,28474	0,005	0,241	0,221	529,8703	0,171	0,076655172
Bore/Drill Rigs	2022	51	120	Bore/Drill Rigs_2022_120	0,227425	0,191	3,25974	2,42459	0,005	0,107	0,099	462,2674	0,15	0,067241379
Bore/Drill Rigs	2022	121	175	Bore/Drill Rigs_2022_175	0,162807	0,137	2,95431	1,28831	0,005	0,057	0,052	477,3719	0,154	0,069034483
Bore/Drill Rigs	2022	176	250	Bore/Drill Rigs_2022_250	0,136848	0,115	1,04734	1,16293	0,005	0,037	0,034	468,7604	0,152	0,068137931
Bore/Drill Rigs	2022	251	500	Bore/Drill Rigs_2022_500	0,12801	0,108	1,00212	1,03525	0,005	0,035	0,032	467,1923	0,151	0,067689655
Bore/Drill Rigs	2022	501	750	Bore/Drill Rigs_2022_750	0,10809	0,091	0,97519	0,77309	0,005	0,028	0,026	477,141	0,154	0,069034483
Bore/Drill Rigs	2022	751	1000	Bore/Drill Rigs_2022_1000	0,067607	0,057	0,9452	2,27813	0,005	0,018	0,017	472,9214	0,153	0,068586207
Bore/Drill Rigs	2023	6	15	Bore/Drill Rigs_2023_15	0,721105	0,606	4,31077	4,20831	0,005	0,226	0,208	531,9856	0,172	0,077103448
Bore/Drill Rigs	2023	16	25	Bore/Drill Rigs_2023_25	0,721105	0,606	4,31077	4,20831	0,005	0,226	0,208	531,9856	0,172	0,077103448
Bore/Drill Rigs	2023	26	50	Bore/Drill Rigs_2023_50	0,721105	0,606	4,31077	4,20831	0,005	0,226	0,208	531,9856	0,172	0,077103448
Bore/Drill Rigs	2023	51	120	Bore/Drill Rigs_2023_120	0,222828	0,187	3,25754	2,35656	0,005	0,102	0,093	461,214	0,149	0,066793103
Bore/Drill Rigs	2023	121	175	Bore/Drill Rigs_2023_175	0,149078	0,125	2,9693	1,07773	0,005	0,048	0,044	479,6465	0,155	0,069482759
Bore/Drill Rigs	2023	176	250	Bore/Drill Rigs_2023_250	0,131367	0,11	1,04309	1,04653	0,005	0,034	0,031	469,7058	0,152	0,068137931
Bore/Drill Rigs	2023	251	500	Bore/Drill Rigs_2023_500	0,120261	0,101	0,98883	0,89764	0,005	0,03	0,028	464,0407	0,15	0,067241379
Bore/Drill Rigs	2023	501	750	Bore/Drill Rigs_2023_750	0,108039	0,091	0,98235	0,71664	0,005	0,026	0,024	479,2199	0,155	0,069482759
Bore/Drill Rigs	2023	751	1000	Bore/Drill Rigs_2023_1000	0,062646	0,053	0,93615	2,26246	0,005	0,018	0,016	472,0201	0,153	0,068586207
Bore/Drill Rigs	2024	6	15	Bore/Drill Rigs_2024_15	0,724524	0,609	4,33098	4,15902	0,005	0,219	0,202	529,8661	0,171	0,076655172
Bore/Drill Rigs	2024	16	25	Bore/Drill Rigs_2024_25	0,724524	0,609	4,33098	4,15902	0,005	0,219	0,202	529,8661	0,171	0,076655172
Bore/Drill Rigs	2024	26	50	Bore/Drill Rigs_2024_50	0,724524	0,609	4,33098	4,15902	0,005	0,219	0,202	529,8661	0,171	0,076655172
Bore/Drill Rigs	2024	51	120	Bore/Drill Rigs_2024_120	0,211018	0,177	3,25123	2,21634	0,005	0,09	0,083	461,2076	0,149	0,066793103
Bore/Drill Rigs	2024	121	175	Bore/Drill Rigs_2024_175	0,148172	0,125	2,97803	1,02855	0,005	0,046	0,043	478,9441	0,155	0,069482759
Bore/Drill Rigs	2024	176	250	Bore/Drill Rigs_2024_250	0,128551	0,108	1,04591	0,97542	0,005	0,032	0,03	470,7115	0,152	0,068137931
Bore/Drill Rigs	2024	251	500	Bore/Drill Rigs_2024_500	0,122153	0,103	0,99426	0,86053	0,005	0,029	0,027	464,4796	0,15	0,067241379
Bore/Drill Rigs	2024	501	750	Bore/Drill Rigs_2024_750	0,10623	0,089	0,98491	0,67139	0,005	0,026	0,024	480,2246	0,155	0,069482759

Bore/Drill Rigs	2024	751	1000	Bore/Drill Rigs_2024_1000	0,067347	0,057	0,94304	2,27306	0,005	0,018	0,017	471,9261	0,153	0,068586207
Bore/Drill Rigs	2025	6	15	Bore/Drill Rigs_2025_15	0,703036	0,591	4,2728	3,97786	0,005	0,193	0,178	532,8212	0,172	0,077103448
Bore/Drill Rigs	2025	16	25	Bore/Drill Rigs_2025_25	0,703036	0,591	4,2728	3,97786	0,005	0,193	0,178	532,8212	0,172	0,077103448
Bore/Drill Rigs	2025	26	50	Bore/Drill Rigs_2025_50	0,703036	0,591	4,2728	3,97786	0,005	0,193	0,178	532,8212	0,172	0,077103448
Bore/Drill Rigs	2025	51	120	Bore/Drill Rigs_2025_120	0,183914	0,155	3,21758	1,96363	0,005	0,067	0,062	459,8291	0,149	0,066793103
Bore/Drill Rigs	2025	121	175	Bore/Drill Rigs_2025_175	0,135422	0,114	2,9736	0,88787	0,005	0,039	0,036	478,2657	0,155	0,069482759
Bore/Drill Rigs	2025	176	250	Bore/Drill Rigs_2025_250	0,127813	0,107	1,04484	0,95717	0,005	0,031	0,029	470,6535	0,152	0,068137931
Bore/Drill Rigs	2025	251	500	Bore/Drill Rigs_2025_500	0,120956	0,102	0,99738	0,82299	0,005	0,028	0,026	467,2892	0,151	0,067689655
Bore/Drill Rigs	2025	501	750	Bore/Drill Rigs_2025_750	0,100521	0,084	0,98349	0,59628	0,005	0,023	0,021	481,2495	0,156	0,069931034
Bore/Drill Rigs	2025	751	1000	Bore/Drill Rigs_2025_1000	0,07426	0,062	0,95339	2,28923	0,005	0,019	0,017	471,9168	0,153	0,068586207
Bore/Drill Rigs	2030	6	15	Bore/Drill Rigs_2030_15	1,821	0,661	3,469	4,142	0,008	0,161	0,161	568,299	0,059	0,026448276
Bore/Drill Rigs	2030	16	25	Bore/Drill Rigs_2030_25	2,917	0,685	2,339	4,332	0,007	0,161	0,161	568,299	0,061	0,027344828
Bore/Drill Rigs	2030	26	50	Bore/Drill Rigs_2030_50	2,88	0,348	4,029	3,02	0,007	0,013	0,013	568,299	0,031	0,013896552
Bore/Drill Rigs	2030	51	120	Bore/Drill Rigs_2030_120	3,773	0,183	3,434	1,415	0,006	0,012	0,012	568,299	0,016	0,007172414
Bore/Drill Rigs	2030	121	175	Bore/Drill Rigs_2030_175	4,786	0,127	3,038	0,279	0,006	0,01	0,01	568,299	0,011	0,004931034
Bore/Drill Rigs	2030	176	250	Bore/Drill Rigs_2030_250	6,363	0,127	1,035	0,274	0,006	0,01	0,01	568,299	0,011	0,004931034
Bore/Drill Rigs	2030	251	500	Bore/Drill Rigs_2030_500	10,531	0,127	1,006	0,274	0,005	0,01	0,01	568,299	0,011	0,004931034
Bore/Drill Rigs	2030	501	750	Bore/Drill Rigs_2030_750	20,808	0,127	1,006	0,274	0,005	0,01	0,01	568,299	0,011	0,004931034
Bore/Drill Rigs	2030	751	1000	Bore/Drill Rigs_2030_1000	31,441	0,127	1,006	2,372	0,005	0,021	0,021	568,299	0,011	0,004931034
Bore/Drill Rigs	2035	6	15	Bore/Drill Rigs_2035_15	1,821	0,661	3,469	4,142	0,008	0,161	0,161	568,299	0,059	0,026448276
Bore/Drill Rigs	2035	16	25	Bore/Drill Rigs_2035_25	2,917	0,685	2,339	4,332	0,007	0,161	0,161	568,299	0,061	0,027344828
Bore/Drill Rigs	2035	26	50	Bore/Drill Rigs_2035_50	2,881	0,348	4,03	3,019	0,007	0,013	0,013	568,299	0,031	0,013896552
Bore/Drill Rigs	2035	51	120	Bore/Drill Rigs_2035_120	3,768	0,183	3,434	1,411	0,006	0,012	0,012	568,3	0,016	0,007172414
Bore/Drill Rigs	2035	121	175	Bore/Drill Rigs_2035_175	4,767	0,126	3,039	0,272	0,006	0,01	0,01	568,299	0,011	0,004931034
Bore/Drill Rigs	2035	176	250	Bore/Drill Rigs_2035_250	6,357	0,126	1,035	0,272	0,006	0,01	0,01	568,299	0,011	0,004931034
Bore/Drill Rigs	2035	251	500	Bore/Drill Rigs_2035_500	10,52	0,126	1,006	0,272	0,005	0,01	0,01	568,299	0,011	0,004931034
Bore/Drill Rigs	2035	501	750	Bore/Drill Rigs_2035_750	20,787	0,126	1,006	0,272	0,005	0,01	0,01	568,299	0,011	0,004931034
Bore/Drill Rigs	2035	751	1000	Bore/Drill Rigs_2035_1000	31,372	0,126	1,006	2,372	0,005	0,021	0,021	568,299	0,011	0,004931034
Bore/Drill Rigs	2040	6	15	Bore/Drill Rigs_2040_15	1,821	0,661	3,469	4,142	0,008	0,161	0,161	568,299	0,059	0,026448276
Bore/Drill Rigs	2040	16	25	Bore/Drill Rigs_2040_25	2,917	0,685	2,339	4,332	0,007	0,161	0,161	568,299	0,061	0,027344828
Bore/Drill Rigs	2040	26	50	Bore/Drill Rigs_2040_50	2,883	0,348	4,032	3,019	0,007	0,013	0,013	568,3	0,031	0,013896552
Bore/Drill Rigs	2040	51	120	Bore/Drill Rigs_2040_120	3,77	0,183	3,435	1,411	0,006	0,012	0,012	568,299	0,016	0,007172414
Bore/Drill Rigs	2040	121	175	Bore/Drill Rigs_2040_175	4,77	0,127	3,039	0,272	0,006	0,01	0,01	568,299	0,011	0,004931034
Bore/Drill Rigs	2040	176	250	Bore/Drill Rigs_2040_250	6,36	0,127	1,035	0,272	0,006	0,01	0,01	568,3	0,011	0,004931034
Bore/Drill Rigs	2040	251	500	Bore/Drill Rigs_2040_500	10,526	0,127	1,006	0,272	0,005	0,01	0,01	568,299	0,011	0,004931034
Bore/Drill Rigs	2040	501	750	Bore/Drill Rigs_2040_750	20,799	0,127	1,006	0,272	0,005	0,01	0,01	568,299	0,011	0,004931034
Bore/Drill Rigs	2040	751	1000	Bore/Drill Rigs_2040_1000	31,389	0,127	1,006	2,372	0,005	0,021	0,021	568,299	0,011	0,004931034
Cement and Mortar Mixers	1990	6	15	Cement and Mortar Mixers_1990_15	2,932	1,804	4,999	9,999	1,049	0,975	0,975	568,299	0,162	0,07262069
Cement and Mortar Mixers	1990	16	25	Cement and Mortar Mixers_1990_25	9,992	2,213	4,999	6,919	0,855	0,741	0,741	568,299	0,199	0,089206897
Cement and Mortar Mixers	2000	6	15	Cement and Mortar Mixers_2000_15	2,702	1,662	4,78	8,911	0,079	0,745	0,745	568,299	0,15	0,067241379
Cement and Mortar Mixers	2000	16	25	Cement and Mortar Mixers_2000_25	9,397	2,081	4,757	6,401	0,065	0,569	0,569	568,299	0,187	0,083827586
Cement and Mortar Mixers	2005	6	15	Cement and Mortar Mixers_2005_15	1,628	1,001	3,791	6,3	0,079	0,465	0,465	568,299	0,09	0,040344828
Cement and Mortar Mixers	2005	16	25	Cement and Mortar Mixers_2005_25	6,992	1,548	3,786	5,963	0,065	0,471	0,471	568,299	0,139	0,062310345
Cement and Mortar Mixers	2010	6	15	Cement and Mortar Mixers_2010_15	1,153	0,709	3,492	4,545	0,008	0,26	0,26	568,299	0,064	0,028689655
Cement and Mortar Mixers	2010	16	25	Cement and Mortar Mixers_2010_25	5,056	1,119	3,049	5,286	0,007	0,346	0,346	568,299	0,101	0,045275862
Cement and Mortar Mixers	2011	6	15	Cement and Mortar Mixers_2011_15	1,114	0,685	3,479	4,351	0,008	0,231	0,231	568,299	0,061	0,027344828
Cement and Mortar Mixers	2011	16	25	Cement and Mortar Mixers_2011_25	4,656	1,031	2,897	5,144	0,007	0,319	0,319	568,299	0,093	0,041689655
Cement and Mortar Mixers	2012	6	15	Cement and Mortar Mixers_2012_15	1,096	0,674	3,472	4,272	0,008	0,209	0,209	568,299	0,06	0,026896552
Cement and Mortar Mixers	2012	16	25	Cement and Mortar Mixers_2012_25	4,288	0,949	2,757	5,012	0,007	0,293	0,293	568,299	0,085	0,038103448
Cement and Mortar Mixers	2013	6	15	Cement and Mortar Mixers_2013_15	1,087	0,669	3,469	4,223	0,008	0,191	0,191	568,299	0,06	0,026896552
Cement and Mortar Mixers	2013	16	25	Cement and Mortar Mixers_2013_25	3,952	0,875	2,63	4,887	0,007	0,269	0,269	568,299	0,078	0,034965517
Cement and Mortar Mixers	2014	6	15	Cement and Mortar Mixers_2014_15	1,082	0,666	3,469	4,191	0,008	0,177	0,177	568,299	0,06	0,026896552
Cement and Mortar Mixers	2014	16	25	Cement and Mortar Mixers_2014_25	3,783	0,837	2,57	4,793	0,007	0,253	0,253	568,299	0,075	0,03362069
Cement and Mortar Mixers	2015	6	15	Cement and Mortar Mixers_2015_15	1,079	0,663	3,469	4,168	0,008	0,171	0,171	568,3	0,059	0,026448276
Cement and Mortar Mixers	2015	16	25	Cement and Mortar Mixers_2015_25	3,664	0,811	2,531	4,712	0,007	0,24	0,24	568,299	0,073	0,032724138
Cement and Mortar Mixers	2016	6	15	Cement and Mortar Mixers_2016_15	1,076	0,662	3,469	4,153	0,008	0,167	0,167	568,3	0,059	0,026448276
Cement and Mortar Mixers	2016	16	25	Cement and Mortar Mixers_2016_25	3,558	0,788	2,496	4,636	0,007	0,227	0,227	568,299	0,071	0,031827586
Cement and Mortar Mixers	2017	6	15	Cement and Mortar Mixers_2017_15	1,075	0,661	3,469	4,145	0,008	0,165	0,165	568,299	0,059	0,026448276
Cement and Mortar Mixers	2017	16	25	Cement and Mortar Mixers_2017_25	3,466	0,767	2,466	4,567	0,007	0,216	0,216	568,299	0,069	0,030931034
Cement and Mortar Mixers	2018	6	15	Cement and Mortar Mixers_2018_15	1,075	0,661	3,469	4,142	0,008	0,163	0,163	568,299	0,059	0,026448276
Cement and Mortar Mixers	2018	16	25	Cement and Mortar Mixers_2018_25	3,384	0,749	2,44	4,504	0,007	0,205	0,205	568,299	0,067	0,030034483
Cement and Mortar Mixers	2019	6	15	Cement and Mortar Mixers_2019_15	1,075	0,661	3,469	4,142	0,008	0,162	0,162	568,299	0,059	0,026448276
Cement and Mortar Mixers	2019	16	25	Cement and Mortar Mixers_2019_25	3,321	0,735	2,417	4,469	0,007	0,196	0,196	568,299	0,066	0,029586207
Cement and Mortar Mixers	2020	6	15	Cement and Mortar Mixers_2020_15	1,075	0,661	3,47	4,142	0,008	0,161	0,161	568,299	0,059	0,026448276
Cement and Mortar Mixers	2020	16	25	Cement and Mortar Mixers_2020_25	3,265	0,723	2,397	4,442	0,007	0,187	0,187	568,299	0,065	0,029137931
Cement and Mortar Mixers	2021	6	15	Cement and Mortar Mixers_2021_15	1,075	0,661	3,469	4,142	0,008	0,161	0,161	568,299	0,059	0,026448276
Cement and Mortar Mixers	2021	16	25	Cement and Mortar Mixers_2021_25	3,219	0,712	2,381	4,419	0,007	0,18	0,18	568,299	0,064	0,028689655
Cement and Mortar Mixers	2022	6	15	Cement and Mortar Mixers_2022_15	1,075	0,661	3,47	4,142	0,008	0,161	0,161	568,299	0,059	0,026448276
Cement and Mortar Mixers	2022	16	25	Cement and Mortar Mixers_2022_25	3,182	0,704	2,367	4,399	0,007	0,175	0,175	568,299	0,063	0,028241379
Cement and Mortar Mixers	2023	6	15	Cement and Mortar Mixers_2023_15	1,075	0,661	3,469	4,142	0,008	0,161	0,161	568,299	0,059	0,026448276
Cement and Mortar Mixers	2023	16	25	Cement and Mortar Mixers_2023_25	3,151	0,697	2,356	4,382	0,007	0,172	0,172	568,299	0,062	0,027793103

Cement and Mortar Mixers	2024	6	15	Cement and Mortar Mixers_2024_15	1,075	0,661	3,469	4,142	0,008	0,161	0,161	568,299	0,059	0,026448276
Cement and Mortar Mixers	2024	16	25	Cement and Mortar Mixers_2024_25	3,129	0,693	2,349	4,369	0,007	0,17	0,17	568,299	0,062	0,027793103
Cement and Mortar Mixers	2025	6	15	Cement and Mortar Mixers_2025_15	1,075	0,661	3,469	4,142	0,008	0,161	0,161	568,299	0,059	0,026448276
Cement and Mortar Mixers	2025	16	25	Cement and Mortar Mixers_2025_25	3,113	0,689	2,344	4,357	0,007	0,168	0,168	568,299	0,062	0,027793103
Cement and Mortar Mixers	2030	6	15	Cement and Mortar Mixers_2030_15	1,075	0,661	3,469	4,142	0,008	0,161	0,161	568,299	0,059	0,026448276
Cement and Mortar Mixers	2030	16	25	Cement and Mortar Mixers_2030_25	3,095	0,685	2,339	4,333	0,007	0,162	0,162	568,299	0,061	0,027344828
Cement and Mortar Mixers	2035	6	15	Cement and Mortar Mixers_2035_15	1,075	0,661	3,469	4,142	0,008	0,161	0,161	568,299	0,059	0,026448276
Cement and Mortar Mixers	2035	16	25	Cement and Mortar Mixers_2035_25	3,095	0,685	2,339	4,332	0,007	0,161	0,161	568,299	0,061	0,027344828
Cement and Mortar Mixers	2040	6	15	Cement and Mortar Mixers_2040_15	1,075	0,661	3,47	4,142	0,008	0,161	0,161	568,299	0,059	0,026448276
Cement and Mortar Mixers	2040	16	25	Cement and Mortar Mixers_2040_25	3,095	0,685	2,339	4,332	0,007	0,161	0,161	568,299	0,061	0,027344828
Concrete/Industrial Saws	1990	16	25	Concrete/Industrial Saws_1990_25	4,947	2,213	4,999	6,919	0,855	0,741	0,741	568,299	0,199	0,089206897
Concrete/Industrial Saws	1990	26	50	Concrete/Industrial Saws_1990_50	20,26	4,943	9,962	8,008	0,871	1,297	1,297	568,299	0,446	0,199931034
Concrete/Industrial Saws	1990	51	120	Concrete/Industrial Saws_1990_120	24,821	2,467	5,934	15,608	0,791	1,385	1,385	568,299	0,222	0,099517241
Concrete/Industrial Saws	1990	121	175	Concrete/Industrial Saws_1990_175	45,581	2,097	5,376	15,952	0,758	1,172	1,172	568,3	0,189	0,084724138
Concrete/Industrial Saws	2000	16	25	Concrete/Industrial Saws_2000_25	4,266	1,908	4,438	6,326	0,065	0,555	0,555	568,299	0,172	0,077103448
Concrete/Industrial Saws	2000	26	50	Concrete/Industrial Saws_2000_50	14,64	3,572	7,547	6,784	0,066	0,789	0,789	568,299	0,322	0,144344828
Concrete/Industrial Saws	2000	51	120	Concrete/Industrial Saws_2000_120	16,713	1,661	4,354	9,903	0,06	0,77	0,77	568,299	0,149	0,066793103
Concrete/Industrial Saws	2000	121	175	Concrete/Industrial Saws_2000_175	24,252	1,115	3,531	9,017	0,057	0,452	0,452	568,3	0,1	0,044827586
Concrete/Industrial Saws	2005	16	25	Concrete/Industrial Saws_2005_25	1,899	0,849	2,519	5,321	0,065	0,333	0,333	568,299	0,076	0,034068966
Concrete/Industrial Saws	2005	26	50	Concrete/Industrial Saws_2005_50	13,023	3,177	6,994	6,32	0,066	0,732	0,732	568,299	0,286	0,128206897
Concrete/Industrial Saws	2005	51	120	Concrete/Industrial Saws_2005_120	14,366	1,428	4,05	8,401	0,06	0,714	0,714	568,299	0,128	0,05737931
Concrete/Industrial Saws	2005	121	175	Concrete/Industrial Saws_2005_175	20,277	0,932	3,223	7,685	0,057	0,393	0,393	568,299	0,084	0,037655172
Concrete/Industrial Saws	2010	16	25	Concrete/Industrial Saws_2010_25	1,545	0,691	2,339	4,411	0,007	0,216	0,216	568,299	0,062	0,027793103
Concrete/Industrial Saws	2010	26	50	Concrete/Industrial Saws_2010_50	9,492	2,316	6,039	5,774	0,007	0,565	0,565	568,299	0,208	0,093241379
Concrete/Industrial Saws	2010	51	120	Concrete/Industrial Saws_2010_120	10,348	1,028	3,813	6,592	0,006	0,551	0,551	568,299	0,092	0,041241379
Concrete/Industrial Saws	2010	121	175	Concrete/Industrial Saws_2010_175	14,859	0,683	3,116	5,838	0,006	0,306	0,306	568,299	0,061	0,027344828
Concrete/Industrial Saws	2011	16	25	Concrete/Industrial Saws_2011_25	1,539	0,688	2,339	4,372	0,007	0,193	0,193	568,299	0,062	0,027793103
Concrete/Industrial Saws	2011	26	50	Concrete/Industrial Saws_2011_50	8,781	2,142	5,854	5,68	0,007	0,534	0,534	568,299	0,193	0,086517241
Concrete/Industrial Saws	2011	51	120	Concrete/Industrial Saws_2011_120	9,617	0,955	3,775	6,222	0,006	0,524	0,524	568,299	0,086	0,038551724
Concrete/Industrial Saws	2011	121	175	Concrete/Industrial Saws_2011_175	13,917	0,64	3,104	5,491	0,006	0,293	0,293	568,299	0,057	0,025551724
Concrete/Industrial Saws	2012	16	25	Concrete/Industrial Saws_2012_25	1,535	0,686	2,339	4,348	0,007	0,173	0,173	568,299	0,061	0,027344828
Concrete/Industrial Saws	2012	26	50	Concrete/Industrial Saws_2012_50	8,071	1,969	5,671	5,59	0,007	0,503	0,503	568,299	0,177	0,079344828
Concrete/Industrial Saws	2012	51	120	Concrete/Industrial Saws_2012_120	8,902	0,884	3,74	5,844	0,006	0,489	0,489	568,299	0,079	0,035413793
Concrete/Industrial Saws	2012	121	175	Concrete/Industrial Saws_2012_175	12,992	0,597	3,094	5,146	0,006	0,272	0,272	568,299	0,053	0,023758621
Concrete/Industrial Saws	2013	16	25	Concrete/Industrial Saws_2013_25	1,533	0,685	2,339	4,335	0,007	0,168	0,168	568,299	0,061	0,027344828
Concrete/Industrial Saws	2013	26	50	Concrete/Industrial Saws_2013_50	7,362	1,796	5,489	5,377	0,007	0,463	0,463	568,299	0,162	0,07262069
Concrete/Industrial Saws	2013	51	120	Concrete/Industrial Saws_2013_120	8,209	0,816	3,706	5,483	0,006	0,451	0,451	568,299	0,073	0,032724138
Concrete/Industrial Saws	2013	121	175	Concrete/Industrial Saws_2013_175	12,096	0,556	3,086	4,829	0,006	0,25	0,25	568,299	0,05	0,022413793
Concrete/Industrial Saws	2014	16	25	Concrete/Industrial Saws_2014_25	1,532	0,685	2,339	4,332	0,007	0,164	0,164	568,299	0,061	0,027344828
Concrete/Industrial Saws	2014	26	50	Concrete/Industrial Saws_2014_50	6,665	1,626	5,313	5,172	0,007	0,424	0,424	568,299	0,146	0,065448276
Concrete/Industrial Saws	2014	51	120	Concrete/Industrial Saws_2014_120	7,539	0,749	3,675	5,16	0,006	0,412	0,412	568,299	0,067	0,030034483
Concrete/Industrial Saws	2014	121	175	Concrete/Industrial Saws_2014_175	11,238	0,517	3,08	4,531	0,006	0,228	0,228	568,299	0,046	0,02062069
Concrete/Industrial Saws	2015	16	25	Concrete/Industrial Saws_2015_25	1,532	0,685	2,339	4,332	0,007	0,162	0,162	568,299	0,061	0,027344828
Concrete/Industrial Saws	2015	26	50	Concrete/Industrial Saws_2015_50	6,027	1,47	5,165	4,989	0,007	0,386	0,386	568,299	0,132	0,059172414
Concrete/Industrial Saws	2015	51	120	Concrete/Industrial Saws_2015_120	6,878	0,683	3,647	4,789	0,006	0,372	0,372	568,3	0,061	0,027344828
Concrete/Industrial Saws	2015	121	175	Concrete/Industrial Saws_2015_175	10,333	0,475	3,077	4,112	0,006	0,207	0,207	568,299	0,042	0,018827586
Concrete/Industrial Saws	2016	16	25	Concrete/Industrial Saws_2016_25	1,532	0,685	2,339	4,332	0,007	0,161	0,161	568,299	0,061	0,027344828
Concrete/Industrial Saws	2016	26	50	Concrete/Industrial Saws_2016_50	5,419	1,322	5,029	4,818	0,007	0,35	0,35	568,3	0,119	0,053344828
Concrete/Industrial Saws	2016	51	120	Concrete/Industrial Saws_2016_120	6,237	0,62	3,62	4,432	0,006	0,333	0,333	568,3	0,055	0,024655172
Concrete/Industrial Saws	2016	121	175	Concrete/Industrial Saws_2016_175	9,455	0,435	3,074	3,708	0,006	0,186	0,186	568,299	0,039	0,017482759
Concrete/Industrial Saws	2017	16	25	Concrete/Industrial Saws_2017_25	1,532	0,685	2,34	4,332	0,007	0,161	0,161	568,299	0,061	0,027344828
Concrete/Industrial Saws	2017	26	50	Concrete/Industrial Saws_2017_50	4,816	1,175	4,894	4,652	0,007	0,313	0,313	568,299	0,106	0,047517241
Concrete/Industrial Saws	2017	51	120	Concrete/Industrial Saws_2017_120	5,61	0,557	3,595	4,086	0,006	0,294	0,294	568,299	0,05	0,022413793
Concrete/Industrial Saws	2017	121	175	Concrete/Industrial Saws_2017_175	8,602	0,395	3,073	3,316	0,006	0,165	0,165	568,299	0,035	0,015689655
Concrete/Industrial Saws	2018	16	25	Concrete/Industrial Saws_2018_25	1,532	0,685	2,339	4,332	0,007	0,161	0,161	568,299	0,061	0,027344828
Concrete/Industrial Saws	2018	26	50	Concrete/Industrial Saws_2018_50	4,233	1,032	4,766	4,492	0,007	0,277	0,277	568,299	0,093	0,041689655
Concrete/Industrial Saws	2018	51	120	Concrete/Industrial Saws_2018_120	5,014	0,498	3,571	3,754	0,006	0,256	0,256	568,299	0,044	0,019724138
Concrete/Industrial Saws	2018	121	175	Concrete/Industrial Saws_2018_175	7,805	0,359	3,072	2,945	0,006	0,145	0,145	568,299	0,032	0,014344828
Concrete/Industrial Saws	2019	16	25	Concrete/Industrial Saws_2019_25	1,532	0,685	2,339	4,332	0,007	0,161	0,161	568,299	0,061	0,027344828
Concrete/Industrial Saws	2019	26	50	Concrete/Industrial Saws_2019_50	3,686	0,899	4,645	4,338	0,007	0,242	0,242	568,299	0,081	0,036310345
Concrete/Industrial Saws	2019	51	120	Concrete/Industrial Saws_2019_120	4,463	0,443	3,55	3,441	0,006	0,22	0,22	568,3	0,04	0,017931034
Concrete/Industrial Saws	2019	121	175	Concrete/Industrial Saws_2019_175	7,177	0,33	3,072	2,618	0,006	0,128	0,128	568,299	0,029	0,013
Concrete/Industrial Saws	2020	16	25	Concrete/Industrial Saws_2020_25	1,532	0,685	2,339	4,332	0,007	0,161	0,161	568,299	0,061	0,027344828
Concrete/Industrial Saws	2020	26	50	Concrete/Industrial Saws_2020_50	3,271	0,798	4,552	4,196	0,007	0,212	0,212	568,299	0,072	0,032275862
Concrete/Industrial Saws	2020	51	120	Concrete/Industrial Saws_2020_120	4,042	0,401	3,535	3,163	0,006	0,19	0,19	568,299	0,036	0,016137931
Concrete/Industrial Saws	2020	121	175	Concrete/Industrial Saws_2020_175	6,669	0,306	3,072	2,324	0,006	0,114	0,114	568,299	0,027	0,012103448
Concrete/Industrial Saws	2021	16	25	Concrete/Industrial Saws_2021_25	1,532	0,685	2,34	4,332	0,007	0,161	0,161	568,299	0,061	0,027344828
Concrete/Industrial Saws	2021	26	50	Concrete/Industrial Saws_2021_50	2,959	0,722	4,481	4,063	0,007	0,184	0,184	568,3	0,065	0,029137931
Concrete/Industrial Saws	2021	51	120	Concrete/Industrial Saws_2021_120	3,721	0,369	3,523	2,913	0,006	0,166	0,166	568,299	0,033	0,014793103
Concrete/Industrial Saws	2021	121	175	Concrete/Industrial Saws_2021_175	6,227	0,286	3,072	2,055	0,006	0,101	0,101	568,299	0,025	0,011206897
Concrete/Industrial Saws	2022	16	25	Concrete/Industrial Saws_2022_25	1,532	0,685	2,339	4,332	0,007	0,161	0,161	568,299	0,061	0,027344828
Concrete/Industrial Saws	2022	26	50	Concrete/Industrial Saws_2022_50	2,705	0,66	4,422	3,936	0,007	0,158	0,158	568,3	0,059	0,026448276

Concrete/Industrial Saws	2022	51	120	Concrete/Industrial Saws_2022_120	3,457	0,343	3,514	2,686	0,006	0,144	0,144	568,299	0,031	0,013896552
Concrete/Industrial Saws	2022	121	175	Concrete/Industrial Saws_2022_175	5,819	0,267	3,072	1,806	0,006	0,089	0,089	568,3	0,024	0,010758621
Concrete/Industrial Saws	2023	16	25	Concrete/Industrial Saws_2023_25	1,532	0,685	2,34	4,332	0,007	0,161	0,161	568,299	0,061	0,027344828
Concrete/Industrial Saws	2023	26	50	Concrete/Industrial Saws_2023_50	2,484	0,606	4,372	3,815	0,007	0,134	0,134	568,299	0,054	0,024206897
Concrete/Industrial Saws	2023	51	120	Concrete/Industrial Saws_2023_120	3,223	0,32	3,507	2,478	0,006	0,123	0,123	568,3	0,028	0,012551724
Concrete/Industrial Saws	2023	121	175	Concrete/Industrial Saws_2023_175	5,453	0,25	3,072	1,599	0,006	0,077	0,077	568,299	0,022	0,009862069
Concrete/Industrial Saws	2024	16	25	Concrete/Industrial Saws_2024_25	1,532	0,685	2,339	4,332	0,007	0,161	0,161	568,299	0,061	0,027344828
Concrete/Industrial Saws	2024	26	50	Concrete/Industrial Saws_2024_50	2,303	0,561	4,33	3,701	0,007	0,115	0,115	568,3	0,05	0,022413793
Concrete/Industrial Saws	2024	51	120	Concrete/Industrial Saws_2024_120	3,023	0,3	3,5	2,315	0,006	0,106	0,106	568,299	0,027	0,012103448
Concrete/Industrial Saws	2024	121	175	Concrete/Industrial Saws_2024_175	5,117	0,235	3,072	1,418	0,006	0,067	0,067	568,299	0,021	0,009413793
Concrete/Industrial Saws	2025	16	25	Concrete/Industrial Saws_2025_25	1,532	0,685	2,339	4,332	0,007	0,161	0,161	568,299	0,061	0,027344828
Concrete/Industrial Saws	2025	26	50	Concrete/Industrial Saws_2025_50	2,153	0,525	4,297	3,592	0,007	0,099	0,099	568,299	0,047	0,021068966
Concrete/Industrial Saws	2025	51	120	Concrete/Industrial Saws_2025_120	2,849	0,283	3,495	2,176	0,006	0,089	0,089	568,3	0,025	0,011206897
Concrete/Industrial Saws	2025	121	175	Concrete/Industrial Saws_2025_175	4,8	0,22	3,073	1,249	0,006	0,056	0,056	568,3	0,019	0,008517241
Concrete/Industrial Saws	2030	16	25	Concrete/Industrial Saws_2030_25	1,532	0,685	2,339	4,332	0,007	0,161	0,161	568,299	0,061	0,027344828
Concrete/Industrial Saws	2030	26	50	Concrete/Industrial Saws_2030_50	1,679	0,409	4,199	3,222	0,007	0,041	0,041	568,299	0,036	0,016137931
Concrete/Industrial Saws	2030	51	120	Concrete/Industrial Saws_2030_120	2,226	0,221	3,48	1,667	0,006	0,036	0,036	568,299	0,019	0,008517241
Concrete/Industrial Saws	2030	121	175	Concrete/Industrial Saws_2030_175	3,551	0,163	3,074	0,59	0,006	0,025	0,025	568,299	0,014	0,006275862
Concrete/Industrial Saws	2035	16	25	Concrete/Industrial Saws_2035_25	1,532	0,685	2,339	4,332	0,007	0,161	0,161	568,299	0,061	0,027344828
Concrete/Industrial Saws	2035	26	50	Concrete/Industrial Saws_2035_50	1,54	0,375	4,174	3,107	0,007	0,021	0,021	568,3	0,033	0,014793103
Concrete/Industrial Saws	2035	51	120	Concrete/Industrial Saws_2035_120	2,015	0,2	3,476	1,491	0,006	0,018	0,018	568,299	0,018	0,008068966
Concrete/Industrial Saws	2035	121	175	Concrete/Industrial Saws_2035_175	3,121	0,143	3,075	0,374	0,006	0,014	0,014	568,299	0,012	0,00537931
Concrete/Industrial Saws	2040	16	25	Concrete/Industrial Saws_2040_25	1,532	0,685	2,339	4,332	0,007	0,161	0,161	568,299	0,061	0,027344828
Concrete/Industrial Saws	2040	26	50	Concrete/Industrial Saws_2040_50	1,532	0,373	4,175	3,058	0,007	0,014	0,014	568,299	0,033	0,014793103
Concrete/Industrial Saws	2040	51	120	Concrete/Industrial Saws_2040_120	1,968	0,195	3,477	1,434	0,006	0,013	0,013	568,299	0,017	0,00762069
Concrete/Industrial Saws	2040	121	175	Concrete/Industrial Saws_2040_175	2,965	0,136	3,076	0,297	0,006	0,011	0,011	568,3	0,012	0,00537931
Cranes	1990	26	50	Cranes_1990_50	13,537	5,179	10,396	8,093	0,871	1,345	1,345	568,299	0,467	0,209344828
Cranes	1990	51	120	Cranes_1990_120	14,178	2,508	5,983	15,674	0,791	1,427	1,427	568,299	0,226	0,101310345
Cranes	1990	121	175	Cranes_1990_175	18,412	2,033	5,387	15,601	0,758	1,142	1,142	568,299	0,183	0,082034483
Cranes	1990	176	250	Cranes_1990_250	25,703	2,033	5,387	15,601	0,758	1,142	1,142	568,299	0,183	0,082034483
Cranes	1990	251	500	Cranes_1990_500	36,191	1,782	12,529	14,718	0,662	0,968	0,968	568,299	0,16	0,071724138
Cranes	1990	501	750	Cranes_1990_750	60,897	1,782	12,529	14,718	1,018	0,986	0,986	568,299	0,16	0,071724138
Cranes	1990	1001	9999	Cranes_1990_9999	194,538	1,778	12,529	14,718	1,018	0,98	0,98	568,299	0,16	0,071724138
Cranes	2000	26	50	Cranes_2000_50	12,119	4,636	9,507	7,163	0,066	0,958	0,958	568,3	0,418	0,18737931
Cranes	2000	51	120	Cranes_2000_120	10,887	1,926	4,81	10,905	0,06	0,93	0,93	568,299	0,173	0,077551724
Cranes	2000	121	175	Cranes_2000_175	11,77	1,299	3,932	9,929	0,057	0,552	0,552	568,299	0,117	0,052448276
Cranes	2000	176	250	Cranes_2000_250	14,291	1,13	3,285	9,635	0,057	0,47	0,47	568,299	0,101	0,045275862
Cranes	2000	251	500	Cranes_2000_500	20,704	1,019	5,545	9,139	0,05	0,411	0,411	568,299	0,092	0,041241379
Cranes	2000	501	750	Cranes_2000_750	34,838	1,019	5,545	9,139	0,052	0,411	0,411	568,299	0,092	0,041241379
Cranes	2000	1001	9999	Cranes_2000_9999	116,509	1,064	6,045	9,643	0,052	0,394	0,394	568,299	0,096	0,043034483
Cranes	2005	26	50	Cranes_2005_50	10,96	4,193	8,893	6,736	0,066	0,898	0,898	568,3	0,378	0,169448276
Cranes	2005	51	120	Cranes_2005_120	9,53	1,686	4,493	9,357	0,06	0,875	0,875	568,299	0,152	0,068137931
Cranes	2005	121	175	Cranes_2005_175	10,036	1,108	3,6	8,542	0,057	0,487	0,487	568,299	0,099	0,04437931
Cranes	2005	176	250	Cranes_2005_250	10,718	0,847	2,367	8,163	0,057	0,343	0,343	568,299	0,076	0,034068966
Cranes	2005	251	500	Cranes_2005_500	15,234	0,75	3,287	7,448	0,05	0,303	0,303	568,299	0,067	0,030034483
Cranes	2005	501	750	Cranes_2005_750	25,971	0,76	3,283	7,598	0,052	0,305	0,305	568,299	0,068	0,030482759
Cranes	2005	1001	9999	Cranes_2005_9999	91,74	0,838	3,718	8,503	0,052	0,293	0,293	568,299	0,075	0,03362069
Cranes	2010	26	50	Cranes_2010_50	2,786882	2,342	7,37084	6,30432	0,005	0,665	0,612	575,653	0,168	0,075310345
Cranes	2010	51	120	Cranes_2010_120	1,626435	1,367	5,06328	11,2099	0,005	0,834	0,767	522,2692	0,152	0,068137931
Cranes	2010	121	175	Cranes_2010_175	0,999512	0,84	3,96843	9,06236	0,005	0,483	0,445	527,7153	0,154	0,069034483
Cranes	2010	176	250	Cranes_2010_250	0,826087	0,694	2,85637	8,39974	0,005	0,383	0,353	525,6477	0,153	0,068586207
Cranes	2010	251	500	Cranes_2010_500	0,629842	0,529	4,77692	7,05496	0,005	0,292	0,268	524,2494	0,153	0,068586207
Cranes	2010	501	750	Cranes_2010_750	0,3105	0,261	1,59747	4,49648	0,005	0,149	0,137	523,8164	0,152	0,068137931
Cranes	2010	1001	9999	Cranes_2010_9999	0,387608	0,326	1,00751	6,39903	0,005	0,151	0,139	524,505	0,153	0,068586207
Cranes	2011	26	50	Cranes_2011_50	2,66715	2,241	7,21121	6,2271	0,005	0,641	0,59	574,2181	0,168	0,075310345
Cranes	2011	51	120	Cranes_2011_120	1,579127	1,327	5,02442	10,9169	0,005	0,81	0,745	521,0055	0,152	0,068137931
Cranes	2011	121	175	Cranes_2011_175	0,990868	0,833	3,9727	8,96629	0,005	0,48	0,441	526,3466	0,154	0,069034483
Cranes	2011	176	250	Cranes_2011_250	0,818849	0,688	2,82731	8,29972	0,005	0,379	0,349	524,3412	0,153	0,068586207
Cranes	2011	251	500	Cranes_2011_500	0,613791	0,516	4,61471	6,85019	0,005	0,283	0,26	523,002	0,153	0,068586207
Cranes	2011	501	750	Cranes_2011_750	0,317708	0,267	1,60931	4,47987	0,005	0,151	0,139	522,4977	0,152	0,068137931
Cranes	2011	1001	9999	Cranes_2011_9999	0,392668	0,33	1,01544	6,442	0,005	0,153	0,141	523,1938	0,153	0,068586207
Cranes	2012	26	50	Cranes_2012_50	2,575229	2,164	7,10245	6,16881	0,005	0,622	0,573	572,7834	0,168	0,075310345
Cranes	2012	51	120	Cranes_2012_120	1,549708	1,302	4,99918	10,7338	0,005	0,795	0,732	519,357	0,152	0,068137931
Cranes	2012	121	175	Cranes_2012_175	0,992021	0,834	3,98552	8,9416	0,005	0,481	0,442	525,0081	0,154	0,069034483
Cranes	2012	176	250	Cranes_2012_250	0,82388	0,692	2,83394	8,30152	0,005	0,381	0,35	522,9802	0,153	0,068586207
Cranes	2012	251	500	Cranes_2012_500	0,612564	0,515	4,5553	6,7893	0,005	0,281	0,259	521,6408	0,153	0,068586207
Cranes	2012	501	750	Cranes_2012_750	0,324471	0,273	1,62066	4,45619	0,005	0,152	0,14	521,1061	0,152	0,068137931
Cranes	2012	1001	9999	Cranes_2012_9999	0,397633	0,334	1,02322	6,48415	0,005	0,156	0,144	521,8825	0,153	0,068586207
Cranes	2013	26	50	Cranes_2013_50	2,54578	2,139	7,11869	6,10837	0,005	0,61	0,561	569,9097	0,168	0,075310345
Cranes	2013	51	120	Cranes_2013_120	1,506211	1,266	4,95084	10,4655	0,005	0,775	0,713	516,6909	0,152	0,068137931
Cranes	2013	121	175	Cranes_2013_175	0,982629	0,826	3,98019	8,83222	0,005	0,476	0,438	522,3332	0,154	0,069034483
Cranes	2013	176	250	Cranes_2013_250	0,813083	0,683	2,80099	8,15558	0,005	0,375	0,345	520,3446	0,153	0,068586207

Cranes	2013	251	500	Cranes_2013_500	0,59291	0,498	4,36265	6,51563	0,005	0,27	0,248	519,0961	0,153	0,068586207
Cranes	2013	501	750	Cranes_2013_750	0,327629	0,275	1,62896	4,36739	0,005	0,15	0,138	518,355	0,152	0,068137931
Cranes	2013	1001	9999	Cranes_2013_9999	0,402502	0,338	1,03085	6,5255	0,005	0,159	0,146	519,26	0,153	0,068586207
Cranes	2014	26	50	Cranes_2014_50	2,516704	2,115	7,12566	6,09324	0,005	0,607	0,559	567,0058	0,168	0,075310345
Cranes	2014	51	120	Cranes_2014_120	1,481452	1,245	4,92305	10,3017	0,005	0,765	0,704	514,0286	0,152	0,068137931
Cranes	2014	121	175	Cranes_2014_175	0,944168	0,793	3,93186	8,47052	0,005	0,457	0,42	519,5114	0,154	0,069034483
Cranes	2014	176	250	Cranes_2014_250	0,786323	0,661	2,72625	7,86026	0,005	0,36	0,331	517,6833	0,153	0,068586207
Cranes	2014	251	500	Cranes_2014_500	0,574656	0,483	4,17708	6,26415	0,005	0,26	0,239	516,5784	0,153	0,068586207
Cranes	2014	501	750	Cranes_2014_750	0,333096	0,28	1,63547	4,32737	0,005	0,151	0,139	515,6071	0,152	0,068137931
Cranes	2014	1001	9999	Cranes_2014_9999	0,143297	0,12	0,94782	2,28075	0,005	0,054	0,05	516,6375	0,153	0,068586207
Cranes	2015	26	50	Cranes_2015_50	2,483294	2,087	7,12517	6,07491	0,005	0,601	0,552	561,2236	0,168	0,075310345
Cranes	2015	51	120	Cranes_2015_120	1,444394	1,214	4,88366	10,0604	0,005	0,747	0,687	508,8366	0,152	0,068137931
Cranes	2015	121	175	Cranes_2015_175	0,930749	0,782	3,91821	8,3254	0,005	0,45	0,414	514,2598	0,154	0,069034483
Cranes	2015	176	250	Cranes_2015_250	0,764242	0,642	2,65334	7,62156	0,005	0,348	0,32	512,4484	0,153	0,068586207
Cranes	2015	251	500	Cranes_2015_500	0,565318	0,475	4,10962	6,12404	0,005	0,253	0,233	511,1972	0,153	0,068586207
Cranes	2015	501	750	Cranes_2015_750	0,340293	0,286	1,64279	4,31183	0,005	0,152	0,14	510,3342	0,152	0,068137931
Cranes	2015	1001	9999	Cranes_2015_9999	0,156078	0,131	0,95679	2,29477	0,005	0,055	0,051	511,3924	0,153	0,068586207
Cranes	2016	26	50	Cranes_2016_50	2,535089	2,13	7,2684	6,11027	0,005	0,61	0,561	555,4414	0,168	0,075310345
Cranes	2016	51	120	Cranes_2016_120	1,373103	1,154	4,79702	9,60772	0,005	0,709	0,653	503,5992	0,152	0,068137931
Cranes	2016	121	175	Cranes_2016_175	0,884915	0,744	3,86156	7,88718	0,005	0,427	0,393	508,9515	0,154	0,069034483
Cranes	2016	176	250	Cranes_2016_250	0,741297	0,623	2,5822	7,38068	0,005	0,335	0,308	507,1552	0,153	0,068586207
Cranes	2016	251	500	Cranes_2016_500	0,527153	0,443	3,83445	5,64865	0,005	0,233	0,215	506,0882	0,153	0,068586207
Cranes	2016	501	750	Cranes_2016_750	0,347738	0,292	1,65024	4,31387	0,005	0,153	0,141	505,0695	0,152	0,068137931
Cranes	2016	1001	9999	Cranes_2016_9999	0,168646	0,142	0,96562	2,30856	0,005	0,056	0,052	506,1474	0,153	0,068586207
Cranes	2017	26	50	Cranes_2017_50	2,585562	2,173	7,40804	6,14479	0,005	0,62	0,57	546,7815	0,168	0,075310345
Cranes	2017	51	120	Cranes_2017_120	1,304913	1,096	4,71022	9,15389	0,005	0,678	0,624	495,7534	0,152	0,068137931
Cranes	2017	121	175	Cranes_2017_175	0,828528	0,696	3,78744	7,36009	0,005	0,397	0,366	501,093	0,154	0,069034483
Cranes	2017	176	250	Cranes_2017_250	0,667136	0,561	2,38452	6,65526	0,005	0,297	0,273	499,3721	0,153	0,068586207
Cranes	2017	251	500	Cranes_2017_500	0,488095	0,41	3,54746	5,23184	0,005	0,212	0,195	498,439	0,153	0,068586207
Cranes	2017	501	750	Cranes_2017_750	0,34114	0,287	1,63305	4,1579	0,005	0,147	0,135	497,1865	0,152	0,068137931
Cranes	2017	1001	9999	Cranes_2017_9999	0,181003	0,152	0,97429	2,32212	0,005	0,057	0,053	498,2798	0,153	0,068586207
Cranes	2018	26	50	Cranes_2018_50	2,466121	2,072	7,24744	6,00385	0,005	0,624	0,574	538,1219	0,168	0,075310345
Cranes	2018	51	120	Cranes_2018_120	1,108698	0,932	4,45237	7,93075	0,005	0,583	0,536	488,1172	0,152	0,068137931
Cranes	2018	121	175	Cranes_2018_175	0,739223	0,621	3,66571	6,5572	0,005	0,351	0,323	493,0451	0,153	0,068586207
Cranes	2018	176	250	Cranes_2018_250	0,574877	0,483	2,13445	5,77298	0,005	0,25	0,23	491,4069	0,153	0,068586207
Cranes	2018	251	500	Cranes_2018_500	0,440014	0,37	3,1871	4,63433	0,005	0,187	0,172	490,8912	0,153	0,068586207
Cranes	2018	501	750	Cranes_2018_750	0,322048	0,271	1,61304	3,7688	0,005	0,137	0,126	489,0536	0,152	0,068137931
Cranes	2018	1001	9999	Cranes_2018_9999	0,193147	0,162	0,98282	2,33544	0,005	0,058	0,054	490,4122	0,153	0,068586207
Cranes	2019	26	50	Cranes_2019_50	2,434147	2,045	7,24465	5,95197	0,005	0,615	0,566	529,4626	0,168	0,075310345
Cranes	2019	51	120	Cranes_2019_120	0,955908	0,803	4,26491	6,95786	0,005	0,5	0,46	480,3251	0,152	0,068137931
Cranes	2019	121	175	Cranes_2019_175	0,675554	0,568	3,5982	5,94857	0,005	0,318	0,292	485,1817	0,154	0,069034483
Cranes	2019	176	250	Cranes_2019_250	0,50769	0,427	1,94079	5,0842	0,005	0,216	0,198	483,4616	0,153	0,068586207
Cranes	2019	251	500	Cranes_2019_500	0,415431	0,349	2,96893	4,29654	0,005	0,173	0,159	483,1422	0,153	0,068586207
Cranes	2019	501	750	Cranes_2019_750	0,299943	0,252	1,44568	3,42803	0,005	0,124	0,114	481,1192	0,152	0,068137931
Cranes	2019	1001	9999	Cranes_2019_9999	0,205078	0,172	0,9912	2,34854	0,005	0,059	0,055	482,5446	0,153	0,068586207
Cranes	2020	26	50	Cranes_2020_50	2,47956	2,084	7,37625	5,98471	0,005	0,624	0,574	517,9263	0,168	0,075310345
Cranes	2020	51	120	Cranes_2020_120	0,871016	0,732	4,17141	6,38117	0,005	0,453	0,417	469,8821	0,152	0,068137931
Cranes	2020	121	175	Cranes_2020_175	0,638941	0,537	3,56232	5,5697	0,005	0,298	0,274	474,5939	0,153	0,068586207
Cranes	2020	176	250	Cranes_2020_250	0,45669	0,384	1,7904	4,56329	0,005	0,188	0,173	472,9488	0,153	0,068586207
Cranes	2020	251	500	Cranes_2020_500	0,381547	0,321	2,66037	3,86243	0,005	0,155	0,142	472,5579	0,153	0,068586207
Cranes	2020	501	750	Cranes_2020_750	0,287724	0,242	1,44353	3,10471	0,005	0,116	0,107	470,4254	0,152	0,068137931
Cranes	2020	1001	9999	Cranes_2020_9999	0,216797	0,182	0,99943	2,3614	0,005	0,06	0,056	472,0545	0,153	0,068586207
Cranes	2021	26	50	Cranes_2021_50	2,516467	2,115	7,48883	6,01375	0,005	0,631	0,581	517,8995	0,167	0,074862069
Cranes	2021	51	120	Cranes_2021_120	0,77522	0,651	4,06507	5,73085	0,005	0,398	0,366	469,8867	0,152	0,068137931
Cranes	2021	121	175	Cranes_2021_175	0,593174	0,498	3,51648	5,1125	0,005	0,273	0,251	474,5458	0,153	0,068586207
Cranes	2021	176	250	Cranes_2021_250	0,415905	0,349	1,67824	4,10439	0,005	0,167	0,153	472,9057	0,153	0,068586207
Cranes	2021	251	500	Cranes_2021_500	0,351498	0,295	2,44833	3,44253	0,005	0,139	0,127	472,4553	0,153	0,068586207
Cranes	2021	501	750	Cranes_2021_750	0,271141	0,228	1,43956	2,72739	0,005	0,107	0,098	470,5495	0,152	0,068137931
Cranes	2021	1001	9999	Cranes_2021_9999	0,228304	0,192	1,00751	2,37402	0,005	0,061	0,056	472,0545	0,153	0,068586207
Cranes	2022	26	50	Cranes_2022_50	2,41359	2,028	7,36828	5,8991	0,005	0,603	0,555	517,8722	0,167	0,074862069
Cranes	2022	51	120	Cranes_2022_120	0,687651	0,578	3,97198	5,14893	0,005	0,346	0,318	469,9929	0,152	0,068137931
Cranes	2022	121	175	Cranes_2022_175	0,543527	0,457	3,4753	4,6169	0,005	0,246	0,227	474,5887	0,153	0,068586207
Cranes	2022	176	250	Cranes_2022_250	0,375691	0,316	1,60164	3,54149	0,005	0,147	0,135	472,9832	0,153	0,068586207
Cranes	2022	251	500	Cranes_2022_500	0,31051	0,261	2,21201	2,89369	0,005	0,117	0,108	472,1806	0,153	0,068586207
Cranes	2022	501	750	Cranes_2022_750	0,238348	0,2	1,28309	2,25087	0,005	0,089	0,082	470,4755	0,152	0,068137931
Cranes	2022	1001	9999	Cranes_2022_9999	0,239599	0,201	1,01544	2,38641	0,005	0,062	0,057	472,0545	0,153	0,068586207
Cranes	2023	26	50	Cranes_2023_50	2,435567	2,047	7,45254	5,9225	0,005	0,608	0,559	517,8722	0,167	0,074862069
Cranes	2023	51	120	Cranes_2023_120	0,656595	0,552	3,9444	4,87461	0,005	0,323	0,297	469,8891	0,152	0,068137931
Cranes	2023	121	175	Cranes_2023_175	0,503663	0,423	3,44284	4,22184	0,005	0,224	0,206	474,595	0,153	0,068586207
Cranes	2023	176	250	Cranes_2023_250	0,353966	0,297	1,55262	3,22938	0,005	0,135	0,124	472,9738	0,153	0,068586207
Cranes	2023	251	500	Cranes_2023_500	0,281202	0,236	2,01	2,5105	0,005	0,102	0,093	472,294	0,153	0,068586207

Cranes	2023	501	750	Cranes_2023_750	0,23207	0,195	1,28213	2,07257	0,005	0,084	0,077	470,2508	0,152	0,068137931
Cranes	2023	1001	9999	Cranes_2023_9999	0,250681	0,211	1,02322	2,39857	0,005	0,063	0,058	472,0545	0,153	0,068586207
Cranes	2024	26	50	Cranes_2024_50	2,304795	1,937	7,26852	5,78796	0,005	0,577	0,531	517,8722	0,167	0,074862069
Cranes	2024	51	120	Cranes_2024_120	0,623876	0,524	3,90649	4,61888	0,005	0,301	0,277	469,9032	0,152	0,068137931
Cranes	2024	121	175	Cranes_2024_175	0,453764	0,381	3,3893	3,7029	0,005	0,196	0,18	474,6358	0,154	0,069034483
Cranes	2024	176	250	Cranes_2024_250	0,334159	0,281	1,50208	2,96596	0,005	0,123	0,114	472,9638	0,153	0,068586207
Cranes	2024	251	500	Cranes_2024_500	0,274315	0,231	1,93263	2,38291	0,005	0,096	0,089	472,0664	0,153	0,068586207
Cranes	2024	501	750	Cranes_2024_750	0,227031	0,191	1,28334	1,89979	0,005	0,08	0,073	470,3306	0,152	0,068137931
Cranes	2024	1001	9999	Cranes_2024_9999	0,261551	0,22	1,03085	2,4105	0,005	0,064	0,059	472,0545	0,153	0,068586207
Cranes	2025	26	50	Cranes_2025_50	2,155227	1,811	7,07168	5,63562	0,005	0,543	0,499	517,8722	0,167	0,074862069
Cranes	2025	51	120	Cranes_2025_120	0,551396	0,463	3,83081	4,13532	0,005	0,26	0,24	469,5332	0,152	0,068137931
Cranes	2025	121	175	Cranes_2025_175	0,397698	0,334	3,33544	3,16038	0,005	0,166	0,153	474,7477	0,154	0,069034483
Cranes	2025	176	250	Cranes_2025_250	0,31508	0,265	1,4697	2,68128	0,005	0,114	0,105	472,9798	0,153	0,068586207
Cranes	2025	251	500	Cranes_2025_500	0,259914	0,218	1,83363	2,15424	0,005	0,088	0,081	471,9671	0,153	0,068586207
Cranes	2025	501	750	Cranes_2025_750	0,204336	0,172	1,27366	1,63763	0,005	0,068	0,062	470,2756	0,152	0,068137931
Cranes	2025	1001	9999	Cranes_2025_9999	0,272209	0,229	1,03833	2,42219	0,005	0,065	0,06	472,0545	0,153	0,068586207
Cranes	2030	26	50	Cranes_2030_50	1,788	0,684	5,366	3,598	0,007	0,075	0,075	568,299	0,061	0,027344828
Cranes	2030	51	120	Cranes_2030_120	1,941	0,343	3,812	1,987	0,006	0,067	0,067	568,299	0,03	0,013448276
Cranes	2030	121	175	Cranes_2030_175	2,293	0,253	3,356	0,916	0,006	0,042	0,042	568,299	0,022	0,009862069
Cranes	2030	176	250	Cranes_2030_250	2,835	0,224	1,147	0,748	0,006	0,024	0,024	568,299	0,02	0,008965517
Cranes	2030	251	500	Cranes_2030_500	4,512	0,222	1,09	0,697	0,005	0,023	0,023	568,299	0,02	0,008965517
Cranes	2030	501	750	Cranes_2030_750	7,602	0,222	1,09	0,709	0,005	0,024	0,024	568,3	0,02	0,008965517
Cranes	2030	1001	9999	Cranes_2030_9999	26,83	0,245	1,108	2,8	0,005	0,043	0,043	568,299	0,022	0,009862069
Cranes	2035	26	50	Cranes_2035_50	1,568	0,6	5,292	3,401	0,007	0,039	0,039	568,299	0,054	0,024206897
Cranes	2035	51	120	Cranes_2035_120	1,696	0,3	3,801	1,676	0,006	0,036	0,036	568,3	0,027	0,012103448
Cranes	2035	121	175	Cranes_2035_175	1,923	0,212	3,357	0,519	0,006	0,024	0,024	568,299	0,019	0,008517241
Cranes	2035	176	250	Cranes_2035_250	2,568	0,203	1,143	0,463	0,006	0,016	0,016	568,299	0,018	0,008068966
Cranes	2035	251	500	Cranes_2035_500	4,111	0,202	1,087	0,441	0,005	0,016	0,016	568,299	0,018	0,008068966
Cranes	2035	501	750	Cranes_2035_750	6,923	0,202	1,087	0,446	0,005	0,016	0,016	568,299	0,018	0,008068966
Cranes	2035	1001	9999	Cranes_2035_9999	22,949	0,209	1,089	2,618	0,005	0,031	0,031	568,299	0,018	0,008068966
Cranes	2040	26	50	Cranes_2040_50	1,483	0,567	5,268	3,324	0,007	0,024	0,024	568,299	0,051	0,022862069
Cranes	2040	51	120	Cranes_2040_120	1,598	0,282	3,797	1,552	0,006	0,021	0,021	568,299	0,025	0,011206897
Cranes	2040	121	175	Cranes_2040_175	1,79	0,197	3,358	0,371	0,006	0,016	0,016	568,299	0,017	0,00762069
Cranes	2040	176	250	Cranes_2040_250	2,465	0,195	1,144	0,344	0,006	0,013	0,013	568,299	0,017	0,00762069
Cranes	2040	251	500	Cranes_2040_500	3,958	0,195	1,087	0,34	0,005	0,013	0,013	568,299	0,017	0,00762069
Cranes	2040	501	750	Cranes_2040_750	6,661	0,195	1,087	0,341	0,005	0,013	0,013	568,299	0,017	0,00762069
Cranes	2040	1001	9999	Cranes_2040_9999	21,703	0,198	1,087	2,534	0,005	0,027	0,027	568,299	0,017	0,00762069
Crawler Tractors	1990	26	50	Crawler Tractors_1990_50	11,254	4,903	9,907	7,983	0,871	1,291	1,291	568,299	0,442	0,198137931
Crawler Tractors	1990	51	120	Crawler Tractors_1990_120	14,413	2,374	5,73	14,967	0,791	1,353	1,353	568,299	0,214	0,095931034
Crawler Tractors	1990	121	175	Crawler Tractors_1990_175	19,335	1,729	5,079	13,979	0,758	0,962	0,962	568,299	0,156	0,069931034
Crawler Tractors	1990	176	250	Crawler Tractors_1990_250	26,505	1,729	5,079	13,979	0,758	0,962	0,962	568,299	0,156	0,069931034
Crawler Tractors	1990	251	500	Crawler Tractors_1990_500	36,545	1,528	11,319	13,238	0,662	0,822	0,822	568,3	0,137	0,061413793
Crawler Tractors	1990	501	750	Crawler Tractors_1990_750	65,509	1,528	11,319	13,238	1,018	0,837	0,837	568,299	0,137	0,061413793
Crawler Tractors	1990	751	1000	Crawler Tractors_1990_1000	92,189	1,518	11,319	13,238	1,018	0,826	0,826	568,299	0,137	0,061413793
Crawler Tractors	2000	26	50	Crawler Tractors_2000_50	10,858	4,73	9,675	7,197	0,066	0,973	0,973	568,299	0,426	0,190965517
Crawler Tractors	2000	51	120	Crawler Tractors_2000_120	11,94	1,966	4,886	11,097	0,06	0,949	0,949	568,299	0,177	0,079344828
Crawler Tractors	2000	121	175	Crawler Tractors_2000_175	14,976	1,339	4,018	10,157	0,057	0,57	0,57	568,3	0,12	0,053793103
Crawler Tractors	2000	176	250	Crawler Tractors_2000_250	17,901	1,168	3,367	9,863	0,057	0,486	0,486	568,299	0,105	0,047068966
Crawler Tractors	2000	251	500	Crawler Tractors_2000_500	25,11	1,049	5,849	9,341	0,05	0,424	0,424	568,299	0,094	0,042137931
Crawler Tractors	2000	501	750	Crawler Tractors_2000_750	45,011	1,049	5,849	9,341	0,052	0,424	0,424	568,299	0,094	0,042137931
Crawler Tractors	2000	751	1000	Crawler Tractors_2000_1000	66,528	1,095	6,349	9,844	0,052	0,407	0,407	568,299	0,098	0,043931034
Crawler Tractors	2005	26	50	Crawler Tractors_2005_50	9,923	4,323	9,124	6,809	0,066	0,919	0,919	568,299	0,39	0,174827586
Crawler Tractors	2005	51	120	Crawler Tractors_2005_120	10,68	1,759	4,63	9,75	0,06	0,903	0,903	568,299	0,158	0,070827586
Crawler Tractors	2005	121	175	Crawler Tractors_2005_175	13,006	1,163	3,749	8,886	0,057	0,513	0,513	568,299	0,104	0,04662069
Crawler Tractors	2005	176	250	Crawler Tractors_2005_250	13,95	0,91	2,557	8,523	0,057	0,371	0,371	568,299	0,082	0,036758621
Crawler Tractors	2005	251	500	Crawler Tractors_2005_500	19,249	0,804	3,945	7,791	0,05	0,326	0,326	568,299	0,072	0,032275862
Crawler Tractors	2005	501	750	Crawler Tractors_2005_750	34,852	0,813	3,938	7,93	0,052	0,328	0,328	568,299	0,073	0,032724138
Crawler Tractors	2005	751	1000	Crawler Tractors_2005_1000	54,011	0,889	4,359	8,804	0,052	0,319	0,319	568,3	0,08	0,035862069
Crawler Tractors	2010	26	50	Crawler Tractors_2010_50	3,193884	2,684	8,18872	6,54779	0,005	0,785	0,722	572,972	0,167	0,074862069
Crawler Tractors	2010	51	120	Crawler Tractors_2010_120	1,069208	0,898	4,10668	7,76656	0,005	0,628	0,578	530,0152	0,154	0,069034483
Crawler Tractors	2010	121	175	Crawler Tractors_2010_175	0,755513	0,635	3,40812	7,15822	0,005	0,378	0,348	524,4997	0,153	0,068586207
Crawler Tractors	2010	176	250	Crawler Tractors_2010_250	0,540569	0,454	1,89919	6,46768	0,005	0,249	0,229	526,1431	0,153	0,068586207
Crawler Tractors	2010	251	500	Crawler Tractors_2010_500	0,491926	0,413	3,0665	5,96739	0,005	0,227	0,209	528,681	0,154	0,069034483
Crawler Tractors	2010	501	750	Crawler Tractors_2010_750	0,418044	0,351	1,75694	5,31967	0,005	0,189	0,174	525,9395	0,153	0,068586207
Crawler Tractors	2010	751	1000	Crawler Tractors_2010_1000	0,545095	0,458	2,04187	7,25547	0,005	0,21	0,193	527,6019	0,154	0,069034483
Crawler Tractors	2011	26	50	Crawler Tractors_2011_50	3,090465	2,597	8,06059	6,48764	0,005	0,762	0,701	571,2544	0,167	0,074862069
Crawler Tractors	2011	51	120	Crawler Tractors_2011_120	1,055307	0,887	4,11149	7,65924	0,005	0,624	0,574	528,5468	0,154	0,069034483
Crawler Tractors	2011	121	175	Crawler Tractors_2011_175	0,753531	0,633	3,422	7,0937	0,005	0,378	0,347	523,1105	0,153	0,068586207
Crawler Tractors	2011	176	250	Crawler Tractors_2011_250	0,541549	0,455	1,8844	6,42306	0,005	0,248	0,228	524,8932	0,153	0,068586207
Crawler Tractors	2011	251	500	Crawler Tractors_2011_500	0,494702	0,416	3,04503	5,91443	0,005	0,226	0,208	527,4003	0,154	0,069034483
Crawler Tractors	2011	501	750	Crawler Tractors_2011_750	0,416615	0,35	1,70832	5,23606	0,005	0,186	0,171	524,9577	0,153	0,068586207
Crawler Tractors	2011	751	1000	Crawler Tractors_2011_1000	0,550612	0,463	2,05264	7,30105	0,005	0,212	0,195	526,3508	0,154	0,069034483

Crawler Tractors	2012	26	50	Crawler Tractors_2012_50	3,127964	2,628	8,16399	6,51312	0,005	0,77	0,708	569,8895	0,167	0,074862069
Crawler Tractors	2012	51	120	Crawler Tractors_2012_120	1,066067	0,896	4,14375	7,67928	0,005	0,633	0,582	527,2248	0,154	0,069034483
Crawler Tractors	2012	121	175	Crawler Tractors_2012_175	0,762695	0,641	3,4484	7,11308	0,005	0,382	0,351	521,7707	0,153	0,068586207
Crawler Tractors	2012	176	250	Crawler Tractors_2012_250	0,549863	0,462	1,8924	6,43904	0,005	0,25	0,23	523,5287	0,153	0,068586207
Crawler Tractors	2012	251	500	Crawler Tractors_2012_500	0,502104	0,422	3,05662	5,9107	0,005	0,227	0,209	526,0223	0,154	0,069034483
Crawler Tractors	2012	501	750	Crawler Tractors_2012_750	0,425611	0,358	1,71661	5,25574	0,005	0,189	0,173	523,7088	0,153	0,068586207
Crawler Tractors	2012	751	1000	Crawler Tractors_2012_1000	0,555874	0,467	2,06265	7,34463	0,005	0,214	0,197	525,1067	0,154	0,069034483
Crawler Tractors	2013	26	50	Crawler Tractors_2013_50	3,060938	2,572	8,10275	6,42928	0,005	0,753	0,692	567,3537	0,167	0,074862069
Crawler Tractors	2013	51	120	Crawler Tractors_2013_120	1,067402	0,897	4,16448	7,64718	0,005	0,636	0,585	524,5941	0,154	0,069034483
Crawler Tractors	2013	121	175	Crawler Tractors_2013_175	0,758762	0,638	3,4566	7,02367	0,005	0,38	0,349	519,0712	0,153	0,068586207
Crawler Tractors	2013	176	250	Crawler Tractors_2013_250	0,548046	0,461	1,8715	6,36771	0,005	0,247	0,227	520,7236	0,153	0,068586207
Crawler Tractors	2013	251	500	Crawler Tractors_2013_500	0,501212	0,421	2,99715	5,82738	0,005	0,225	0,207	523,5592	0,154	0,069034483
Crawler Tractors	2013	501	750	Crawler Tractors_2013_750	0,418079	0,351	1,67885	5,09878	0,005	0,183	0,168	520,5693	0,153	0,068586207
Crawler Tractors	2013	751	1000	Crawler Tractors_2013_1000	0,560878	0,471	2,07187	7,3862	0,005	0,216	0,199	522,5513	0,154	0,069034483
Crawler Tractors	2014	26	50	Crawler Tractors_2014_50	3,000333	2,521	8,04733	6,39578	0,005	0,743	0,684	564,5641	0,167	0,074862069
Crawler Tractors	2014	51	120	Crawler Tractors_2014_120	1,051605	0,884	4,16815	7,52434	0,005	0,628	0,578	522,1187	0,154	0,069034483
Crawler Tractors	2014	121	175	Crawler Tractors_2014_175	0,748303	0,629	3,45911	6,87548	0,005	0,374	0,344	516,4039	0,153	0,068586207
Crawler Tractors	2014	176	250	Crawler Tractors_2014_250	0,54035	0,454	1,83765	6,23751	0,005	0,241	0,222	518,0363	0,153	0,068586207
Crawler Tractors	2014	251	500	Crawler Tractors_2014_500	0,490461	0,412	2,91108	5,61601	0,005	0,217	0,2	520,5153	0,154	0,069034483
Crawler Tractors	2014	501	750	Crawler Tractors_2014_750	0,412689	0,347	1,67523	4,89468	0,005	0,179	0,164	517,8612	0,153	0,068586207
Crawler Tractors	2014	751	1000	Crawler Tractors_2014_1000	0,565619	0,475	2,08028	7,42576	0,005	0,218	0,201	520,0052	0,154	0,069034483
Crawler Tractors	2015	26	50	Crawler Tractors_2015_50	2,990271	2,513	8,07628	6,37736	0,005	0,741	0,682	558,8878	0,167	0,074862069
Crawler Tractors	2015	51	120	Crawler Tractors_2015_120	1,05262	0,884	4,18907	7,4938	0,005	0,63	0,58	516,8433	0,154	0,069034483
Crawler Tractors	2015	121	175	Crawler Tractors_2015_175	0,751623	0,632	3,47922	6,84937	0,005	0,376	0,346	511,3059	0,153	0,068586207
Crawler Tractors	2015	176	250	Crawler Tractors_2015_250	0,536796	0,451	1,81586	6,14312	0,005	0,237	0,218	512,8973	0,153	0,068586207
Crawler Tractors	2015	251	500	Crawler Tractors_2015_500	0,485596	0,408	2,84505	5,48324	0,005	0,212	0,195	515,3725	0,154	0,069034483
Crawler Tractors	2015	501	750	Crawler Tractors_2015_750	0,41802	0,351	1,66415	4,88301	0,005	0,179	0,165	512,5402	0,153	0,068586207
Crawler Tractors	2015	751	1000	Crawler Tractors_2015_1000	0,570092	0,479	2,08783	7,46329	0,005	0,22	0,202	514,83	0,154	0,069034483
Crawler Tractors	2016	26	50	Crawler Tractors_2016_50	2,99791	2,519	8,10441	6,31718	0,005	0,733	0,674	553,214	0,167	0,074862069
Crawler Tractors	2016	51	120	Crawler Tractors_2016_120	1,034441	0,869	4,18548	7,34589	0,005	0,619	0,57	511,268	0,154	0,069034483
Crawler Tractors	2016	121	175	Crawler Tractors_2016_175	0,743125	0,624	3,48211	6,7205	0,005	0,371	0,341	506,0335	0,153	0,068586207
Crawler Tractors	2016	176	250	Crawler Tractors_2016_250	0,534039	0,449	1,80295	6,04745	0,005	0,233	0,215	507,355	0,153	0,068586207
Crawler Tractors	2016	251	500	Crawler Tractors_2016_500	0,473782	0,398	2,74397	5,27907	0,005	0,205	0,188	510,3385	0,154	0,069034483
Crawler Tractors	2016	501	750	Crawler Tractors_2016_750	0,41158	0,346	1,6206	4,7238	0,005	0,174	0,16	507,2527	0,153	0,068586207
Crawler Tractors	2016	751	1000	Crawler Tractors_2016_1000	0,57429	0,483	2,09448	7,4988	0,005	0,222	0,204	509,6671	0,154	0,069034483
Crawler Tractors	2017	26	50	Crawler Tractors_2017_50	2,926516	2,459	8,00596	6,20834	0,005	0,712	0,655	544,6762	0,167	0,074862069
Crawler Tractors	2017	51	120	Crawler Tractors_2017_120	1,010844	0,849	4,17611	7,141	0,005	0,604	0,555	503,2791	0,154	0,069034483
Crawler Tractors	2017	121	175	Crawler Tractors_2017_175	0,731209	0,614	3,48322	6,55188	0,005	0,364	0,335	498,1245	0,153	0,068586207
Crawler Tractors	2017	176	250	Crawler Tractors_2017_250	0,511144	0,43	1,7418	5,75969	0,005	0,22	0,202	499,832	0,153	0,068586207
Crawler Tractors	2017	251	500	Crawler Tractors_2017_500	0,458057	0,385	2,6349	5,02932	0,005	0,195	0,179	502,422	0,154	0,069034483
Crawler Tractors	2017	501	750	Crawler Tractors_2017_750	0,386074	0,324	1,5221	4,36108	0,005	0,16	0,147	499,1046	0,153	0,068586207
Crawler Tractors	2017	751	1000	Crawler Tractors_2017_1000	0,578206	0,486	2,10018	7,53226	0,005	0,223	0,205	501,8777	0,154	0,069034483
Crawler Tractors	2018	26	50	Crawler Tractors_2018_50	2,910335	2,445	8,0094	6,16323	0,005	0,704	0,647	536,1409	0,167	0,074862069
Crawler Tractors	2018	51	120	Crawler Tractors_2018_120	0,949614	0,798	4,1231	6,72257	0,005	0,566	0,52	494,9217	0,154	0,069034483
Crawler Tractors	2018	121	175	Crawler Tractors_2018_175	0,660412	0,555	3,42131	5,8588	0,005	0,325	0,299	490,0002	0,153	0,068586207
Crawler Tractors	2018	176	250	Crawler Tractors_2018_250	0,473989	0,398	1,65354	5,28959	0,005	0,2	0,184	491,606	0,153	0,068586207
Crawler Tractors	2018	251	500	Crawler Tractors_2018_500	0,409351	0,344	2,38218	4,37324	0,005	0,169	0,156	493,5104	0,154	0,069034483
Crawler Tractors	2018	501	750	Crawler Tractors_2018_750	0,351876	0,296	1,4447	3,8336	0,005	0,141	0,13	491,2659	0,153	0,068586207
Crawler Tractors	2018	751	1000	Crawler Tractors_2018_1000	0,581827	0,489	2,10483	7,56366	0,005	0,225	0,207	494,1052	0,154	0,069034483
Crawler Tractors	2019	26	50	Crawler Tractors_2019_50	2,648469	2,225	7,58896	5,85476	0,005	0,64	0,589	525,9767	0,166	0,074413793
Crawler Tractors	2019	51	120	Crawler Tractors_2019_120	0,901167	0,757	4,08842	6,39347	0,005	0,535	0,492	486,9909	0,154	0,069034483
Crawler Tractors	2019	121	175	Crawler Tractors_2019_175	0,615173	0,517	3,37886	5,38191	0,005	0,3	0,276	481,6222	0,152	0,068137931
Crawler Tractors	2019	176	250	Crawler Tractors_2019_250	0,45175	0,38	1,60445	4,9721	0,005	0,187	0,172	483,4489	0,153	0,068586207
Crawler Tractors	2019	251	500	Crawler Tractors_2019_500	0,37933	0,319	2,21938	3,93412	0,005	0,153	0,141	485,8645	0,154	0,069034483
Crawler Tractors	2019	501	750	Crawler Tractors_2019_750	0,316919	0,266	1,35585	3,34253	0,005	0,123	0,113	483,3879	0,153	0,068586207
Crawler Tractors	2019	751	1000	Crawler Tractors_2019_1000	0,547243	0,46	2,02037	7,21215	0,005	0,211	0,194	486,2545	0,154	0,069034483
Crawler Tractors	2020	26	50	Crawler Tractors_2020_50	2,443056	2,053	7,3	5,64276	0,005	0,591	0,544	515,679	0,167	0,074862069
Crawler Tractors	2020	51	120	Crawler Tractors_2020_120	0,850709	0,715	4,04412	6,00933	0,005	0,5	0,46	476,3284	0,154	0,069034483
Crawler Tractors	2020	121	175	Crawler Tractors_2020_175	0,566576	0,476	3,33989	4,87226	0,005	0,272	0,25	471,015	0,152	0,068137931
Crawler Tractors	2020	176	250	Crawler Tractors_2020_250	0,428471	0,36	1,55491	4,63225	0,005	0,175	0,161	472,941	0,153	0,068586207
Crawler Tractors	2020	251	500	Crawler Tractors_2020_500	0,358593	0,301	2,0875	3,62175	0,005	0,141	0,13	475,2338	0,154	0,069034483
Crawler Tractors	2020	501	750	Crawler Tractors_2020_750	0,304872	0,256	1,31018	3,13716	0,005	0,115	0,106	473,3119	0,153	0,068586207
Crawler Tractors	2020	751	1000	Crawler Tractors_2020_1000	0,551035	0,463	2,02764	7,23682	0,005	0,212	0,195	475,6525	0,154	0,069034483
Crawler Tractors	2021	26	50	Crawler Tractors_2021_50	2,456387	2,064	7,34869	5,61511	0,005	0,591	0,543	516,1077	0,167	0,074862069
Crawler Tractors	2021	51	120	Crawler Tractors_2021_120	0,800723	0,673	4,00549	5,65746	0,005	0,466	0,428	476,437	0,154	0,069034483
Crawler Tractors	2021	121	175	Crawler Tractors_2021_175	0,518367	0,436	3,30982	4,3947	0,005	0,245	0,225	471,421	0,152	0,068137931
Crawler Tractors	2021	176	250	Crawler Tractors_2021_250	0,407794	0,343	1,51456	4,33394	0,005	0,163	0,15	472,9246	0,153	0,068586207
Crawler Tractors	2021	251	500	Crawler Tractors_2021_500	0,337066	0,283	2,02434	3,27633	0,005	0,129	0,119	474,4843	0,153	0,068586207
Crawler Tractors	2021	501	750	Crawler Tractors_2021_750	0,284829	0,239	1,26985	2,82478	0,005	0,104	0,095	473,0941	0,153	0,068586207
Crawler Tractors	2021	751	1000	Crawler Tractors_2021_1000	0,475256	0,399	1,89563	6,3992	0,005	0,182	0,167	471,8224	0,153	0,068586207
Crawler Tractors	2022	26	50	Crawler Tractors_2022_50	2,25944	1,899	7,04118	5,37962	0,005	0,539	0,496	516,1476	0,167	0,074862069
Crawler Tractors	2022	51	120	Crawler Tractors_2022_120	0,714244	0,6	3,92498	5,10103	0,005	0,408	0,375	476,0219	0,154	0,069034483
Crawler Tractors	2022	121	175	Crawler Tractors_2022_175	0,463094	0,389	3,26382	3,82659	0,005	0,214	0,197	471,5674	0,153	0,068586207

Crawler Tractors	2022	176	250	Crawler Tractors_2022_250	0,364117	0,306	1,43975	3,73672	0,005	0,141	0,13	472,0975	0,153	0,068586207
Crawler Tractors	2022	251	500	Crawler Tractors_2022_500	0,30258	0,254	1,91628	2,74435	0,005	0,111	0,102	474,4115	0,153	0,068586207
Crawler Tractors	2022	501	750	Crawler Tractors_2022_750	0,235465	0,198	1,18638	2,12552	0,005	0,079	0,073	472,876	0,153	0,068586207
Crawler Tractors	2022	751	1000	Crawler Tractors_2022_1000	0,424397	0,357	1,73227	5,92299	0,005	0,162	0,149	470,7007	0,152	0,068137931
Crawler Tractors	2023	26	50	Crawler Tractors_2023_50	2,228685	1,873	7,02687	5,32514	0,005	0,526	0,484	516,1587	0,167	0,074862069
Crawler Tractors	2023	51	120	Crawler Tractors_2023_120	0,663952	0,558	3,88936	4,76208	0,005	0,373	0,343	476,1575	0,154	0,069034483
Crawler Tractors	2023	121	175	Crawler Tractors_2023_175	0,41309	0,347	3,23526	3,33004	0,005	0,185	0,17	471,7805	0,153	0,068586207
Crawler Tractors	2023	176	250	Crawler Tractors_2023_250	0,328767	0,276	1,39549	3,18735	0,005	0,124	0,114	471,6244	0,153	0,068586207
Crawler Tractors	2023	251	500	Crawler Tractors_2023_500	0,286276	0,241	1,85216	2,47635	0,005	0,102	0,094	474,6128	0,153	0,068586207
Crawler Tractors	2023	501	750	Crawler Tractors_2023_750	0,218505	0,184	1,15892	1,86667	0,005	0,069	0,064	472,5297	0,153	0,068586207
Crawler Tractors	2023	751	1000	Crawler Tractors_2023_1000	0,319268	0,268	1,6104	4,76968	0,005	0,118	0,109	473,6655	0,153	0,068586207
Crawler Tractors	2024	26	50	Crawler Tractors_2024_50	2,089827	1,756	6,68497	4,97522	0,005	0,466	0,429	515,4658	0,167	0,074862069
Crawler Tractors	2024	51	120	Crawler Tractors_2024_120	0,610839	0,513	3,85173	4,40892	0,005	0,335	0,309	476,2342	0,154	0,069034483
Crawler Tractors	2024	121	175	Crawler Tractors_2024_175	0,387606	0,326	3,22706	3,04107	0,005	0,17	0,157	471,8291	0,153	0,068586207
Crawler Tractors	2024	176	250	Crawler Tractors_2024_250	0,313897	0,264	1,36992	2,95319	0,005	0,115	0,105	471,8603	0,153	0,068586207
Crawler Tractors	2024	251	500	Crawler Tractors_2024_500	0,271114	0,228	1,77984	2,2441	0,005	0,093	0,085	474,025	0,153	0,068586207
Crawler Tractors	2024	501	750	Crawler Tractors_2024_750	0,215283	0,181	1,15921	1,76658	0,005	0,066	0,061	472,2827	0,153	0,068586207
Crawler Tractors	2024	751	1000	Crawler Tractors_2024_1000	0,313081	0,263	1,58774	4,68945	0,005	0,115	0,106	474,6448	0,154	0,069034483
Crawler Tractors	2025	26	50	Crawler Tractors_2025_50	2,075042	1,744	6,68642	4,93567	0,005	0,456	0,42	516,1279	0,167	0,074862069
Crawler Tractors	2025	51	120	Crawler Tractors_2025_120	0,540303	0,454	3,78839	3,96126	0,005	0,285	0,262	476,1336	0,154	0,069034483
Crawler Tractors	2025	121	175	Crawler Tractors_2025_175	0,354345	0,298	3,20909	2,68768	0,005	0,15	0,138	471,5923	0,153	0,068586207
Crawler Tractors	2025	176	250	Crawler Tractors_2025_250	0,276616	0,232	1,30849	2,46158	0,005	0,096	0,088	471,6224	0,153	0,068586207
Crawler Tractors	2025	251	500	Crawler Tractors_2025_500	0,247477	0,208	1,71697	1,92007	0,005	0,081	0,074	474,0072	0,153	0,068586207
Crawler Tractors	2025	501	750	Crawler Tractors_2025_750	0,198724	0,167	1,12199	1,54452	0,005	0,057	0,052	472,4081	0,153	0,068586207
Crawler Tractors	2025	751	1000	Crawler Tractors_2025_1000	0,308836	0,26	1,59298	4,59799	0,005	0,111	0,103	475,4901	0,154	0,069034483
Crawler Tractors	2030	26	50	Crawler Tractors_2030_50	1,912	0,833	5,605	3,808	0,007	0,116	0,116	568,299	0,075	0,03362069
Crawler Tractors	2030	51	120	Crawler Tractors_2030_120	2,461	0,405	3,871	2,341	0,006	0,105	0,105	568,299	0,036	0,016137931
Crawler Tractors	2030	121	175	Crawler Tractors_2030_175	3,315	0,296	3,397	1,266	0,006	0,065	0,065	568,299	0,026	0,011655172
Crawler Tractors	2030	176	250	Crawler Tractors_2030_250	4,019	0,262	1,207	1,104	0,006	0,04	0,04	568,299	0,023	0,010310345
Crawler Tractors	2030	251	500	Crawler Tractors_2030_500	6,146	0,257	1,2	1,016	0,005	0,038	0,038	568,299	0,023	0,010310345
Crawler Tractors	2030	501	750	Crawler Tractors_2030_750	11,033	0,257	1,2	1,033	0,005	0,038	0,038	568,299	0,023	0,010310345
Crawler Tractors	2030	751	1000	Crawler Tractors_2030_1000	16,147	0,265	1,225	3,094	0,005	0,056	0,056	568,3	0,023	0,010310345
Crawler Tractors	2035	26	50	Crawler Tractors_2035_50	1,626	0,708	5,493	3,558	0,007	0,066	0,066	568,299	0,063	0,028241379
Crawler Tractors	2035	51	120	Crawler Tractors_2035_120	2,099	0,345	3,85	1,922	0,006	0,06	0,06	568,299	0,031	0,013896552
Crawler Tractors	2035	121	175	Crawler Tractors_2035_175	2,772	0,247	3,391	0,794	0,006	0,038	0,038	568,299	0,022	0,009862069
Crawler Tractors	2035	176	250	Crawler Tractors_2035_250	3,521	0,229	1,182	0,695	0,006	0,026	0,026	568,299	0,02	0,008965517
Crawler Tractors	2035	251	500	Crawler Tractors_2035_500	5,432	0,227	1,145	0,657	0,005	0,025	0,025	568,299	0,02	0,008965517
Crawler Tractors	2035	501	750	Crawler Tractors_2035_750	9,744	0,227	1,145	0,664	0,005	0,025	0,025	568,299	0,02	0,008965517
Crawler Tractors	2035	751	1000	Crawler Tractors_2035_1000	14,073	0,231	1,159	2,792	0,005	0,041	0,041	568,299	0,02	0,008965517
Crawler Tractors	2040	26	50	Crawler Tractors_2040_50	1,499	0,653	5,443	3,42	0,007	0,042	0,042	568,299	0,058	0,026
Crawler Tractors	2040	51	120	Crawler Tractors_2040_120	1,924	0,316	3,839	1,709	0,006	0,039	0,039	568,299	0,028	0,012551724
Crawler Tractors	2040	121	175	Crawler Tractors_2040_175	2,48	0,221	3,388	0,539	0,006	0,025	0,025	568,299	0,02	0,008965517
Crawler Tractors	2040	176	250	Crawler Tractors_2040_250	3,247	0,211	1,167	0,491	0,006	0,018	0,018	568,299	0,019	0,008517241
Crawler Tractors	2040	251	500	Crawler Tractors_2040_500	5,035	0,21	1,113	0,47	0,005	0,018	0,018	568,299	0,018	0,008068966
Crawler Tractors	2040	501	750	Crawler Tractors_2040_750	9,03	0,21	1,113	0,475	0,005	0,018	0,018	568,299	0,019	0,008517241
Crawler Tractors	2040	751	1000	Crawler Tractors_2040_1000	12,945	0,213	1,122	2,652	0,005	0,032	0,032	568,299	0,019	0,008517241
Crushing/Proc.Equipment	1990	26	50	Crushing/Proc.Equipment_1990_50	11,643	4,43	9,044	7,809	0,871	1,194	1,194	568,299	0,399	0,178862069
Crushing/Proc.Equipment	1990	51	120	Crushing/Proc.Equipment_1990_120	11,193	2,255	5,547	14,555	0,791	1,258	1,258	568,299	0,203	0,091
Crushing/Proc.Equipment	1990	121	175	Crushing/Proc.Equipment_1990_175	15,383	1,54	4,913	13,086	0,758	0,834	0,834	568,299	0,138	0,061862069
Crushing/Proc.Equipment	1990	176	250	Crushing/Proc.Equipment_1990_250	22,49	1,54	4,913	13,086	0,758	0,834	0,834	568,299	0,138	0,061862069
Crushing/Proc.Equipment	1990	251	500	Crushing/Proc.Equipment_1990_500	30,672	1,374	10,176	12,492	0,662	0,724	0,724	568,299	0,124	0,055586207
Crushing/Proc.Equipment	1990	501	750	Crushing/Proc.Equipment_1990_750	48,337	1,374	10,175	12,492	1,018	0,737	0,737	568,299	0,124	0,055586207
Crushing/Proc.Equipment	1990	1001	9999	Crushing/Proc.Equipment_1990_9999	106,942	1,369	10,175	12,492	1,018	0,731	0,731	568,299	0,123	0,055137931
Crushing/Proc.Equipment	2000	26	50	Crushing/Proc.Equipment_2000_50	10,827	4,12	8,551	6,954	0,066	0,876	0,876	568,299	0,371	0,166310345
Crushing/Proc.Equipment	2000	51	120	Crushing/Proc.Equipment_2000_120	8,945	1,802	4,594	10,363	0,06	0,857	0,857	568,299	0,162	0,07262069
Crushing/Proc.Equipment	2000	121	175	Crushing/Proc.Equipment_2000_175	12,05	1,206	3,737	9,416	0,057	0,506	0,506	568,299	0,108	0,048413793
Crushing/Proc.Equipment	2000	176	250	Crushing/Proc.Equipment_2000_250	14,723	1,008	2,963	9,058	0,057	0,414	0,414	568,299	0,09	0,040344828
Crushing/Proc.Equipment	2000	251	500	Crushing/Proc.Equipment_2000_500	20,487	0,918	5,011	8,658	0,05	0,366	0,366	568,299	0,082	0,036758621
Crushing/Proc.Equipment	2000	501	750	Crushing/Proc.Equipment_2000_750	30,946	0,88	4,658	8,459	0,052	0,348	0,348	568,299	0,079	0,035413793
Crushing/Proc.Equipment	2000	1001	9999	Crushing/Proc.Equipment_2000_9999	77,281	0,989	5,329	9,138	0,052	0,37	0,37	568,299	0,089	0,039896552
Crushing/Proc.Equipment	2005	26	50	Crushing/Proc.Equipment_2005_50	9,624	3,662	7,904	6,477	0,066	0,812	0,812	568,3	0,33	0,147931034
Crushing/Proc.Equipment	2005	51	120	Crushing/Proc.Equipment_2005_120	7,644	1,54	4,24	8,68	0,06	0,794	0,794	568,299	0,138	0,061862069
Crushing/Proc.Equipment	2005	121	175	Crushing/Proc.Equipment_2005_175	10,064	1,007	3,372	7,941	0,057	0,438	0,438	568,299	0,09	0,040344828
Crushing/Proc.Equipment	2005	176	250	Crushing/Proc.Equipment_2005_250	10,399	0,712	1,97	7,484	0,057	0,282	0,282	568,299	0,064	0,028689655
Crushing/Proc.Equipment	2005	251	500	Crushing/Proc.Equipment_2005_500	14,029	0,628	2,549	6,846	0,05	0,252	0,252	568,299	0,056	0,025103448
Crushing/Proc.Equipment	2005	501	750	Crushing/Proc.Equipment_2005_750	22,225	0,632	2,431	6,974	0,052	0,249	0,249	568,299	0,057	0,025551724
Crushing/Proc.Equipment	2005	1001	9999	Crushing/Proc.Equipment_2005_9999	60,257	0,771	3,042	8,054	0,052	0,268	0,268	568,299	0,069	0,030931034
Crushing/Proc.Equipment	2010	26	50	Crushing/Proc.Equipment_2010_50	7,704	2,931	7,22	6,068	0,007	0,671	0,671	568,299	0,264	0,118344828
Crushing/Proc.Equipment	2010	51	120	Crushing/Proc.Equipment_2010_120	5,971	1,203	4,071	7,096	0,006	0,656	0,656	568,299	0,108	0,048413793
Crushing/Proc.Equipment	2010	121	175	Crushing/Proc.Equipment_2010_175	8,033	0,804	3,307	6,322	0,006	0,362	0,362	568,299	0,072	0,032275862
Crushing/Proc.Equipment	2010	176	250	Crushing/Proc.Equipment_2010_250	7,61	0,521	1,446	5,918	0,006	0,195	0,195	568,299	0,047	0,021068966
Crushing/Proc.Equipment	2010	251	500	Crushing/Proc.Equipment_2010_500	10,487	0,47	1,603	5,248	0,005	0,18	0,18	568,299	0,042	0,018827586
Crushing/Proc.Equipment	2010	501	750	Crushing/Proc.Equipment_2010_750	16,814	0,478	1,568	5,449	0,005	0,183	0,183	568,299	0,043	0,019275862

Crushing/Proc.Equipment	2010	1001	9999	Crushing/Proc.Equipment_2010_9999	46,933	0,601	2,091	6,987	0,005	0,209	0,209	568,299	0,054	0,024206897
Crushing/Proc.Equipment	2011	26	50	Crushing/Proc.Equipment_2011_50	7,155	2,722	6,995	5,972	0,007	0,636	0,636	568,299	0,245	0,109827586
Crushing/Proc.Equipment	2011	51	120	Crushing/Proc.Equipment_2011_120	5,588	1,125	4,03	6,704	0,006	0,625	0,625	568,3	0,101	0,045275862
Crushing/Proc.Equipment	2011	121	175	Crushing/Proc.Equipment_2011_175	7,581	0,759	3,294	5,953	0,006	0,347	0,347	568,299	0,068	0,030482759
Crushing/Proc.Equipment	2011	176	250	Crushing/Proc.Equipment_2011_250	7,059	0,483	1,356	5,498	0,006	0,175	0,175	568,299	0,043	0,019275862
Crushing/Proc.Equipment	2011	251	500	Crushing/Proc.Equipment_2011_500	9,796	0,439	1,462	4,858	0,005	0,162	0,162	568,299	0,039	0,017482759
Crushing/Proc.Equipment	2011	501	750	Crushing/Proc.Equipment_2011_750	15,681	0,446	1,435	5,054	0,005	0,165	0,165	568,299	0,04	0,017931034
Crushing/Proc.Equipment	2011	1001	9999	Crushing/Proc.Equipment_2011_9999	44,108	0,564	1,923	6,609	0,005	0,196	0,196	568,299	0,05	0,022413793
Crushing/Proc.Equipment	2012	26	50	Crushing/Proc.Equipment_2012_50	6,538	2,488	6,733	5,867	0,007	0,596	0,596	568,299	0,224	0,100413793
Crushing/Proc.Equipment	2012	51	120	Crushing/Proc.Equipment_2012_120	5,173	1,042	3,984	6,269	0,006	0,582	0,582	568,299	0,094	0,042137931
Crushing/Proc.Equipment	2012	121	175	Crushing/Proc.Equipment_2012_175	7,084	0,709	3,28	5,553	0,006	0,321	0,321	568,299	0,064	0,028689655
Crushing/Proc.Equipment	2012	176	250	Crushing/Proc.Equipment_2012_250	6,627	0,453	1,299	5,088	0,006	0,158	0,158	568,299	0,04	0,017931034
Crushing/Proc.Equipment	2012	251	500	Crushing/Proc.Equipment_2012_500	9,273	0,415	1,362	4,48	0,005	0,147	0,147	568,3	0,037	0,016586207
Crushing/Proc.Equipment	2012	501	750	Crushing/Proc.Equipment_2012_750	14,786	0,42	1,341	4,662	0,005	0,15	0,15	568,299	0,037	0,016586207
Crushing/Proc.Equipment	2012	1001	9999	Crushing/Proc.Equipment_2012_9999	41,105	0,526	1,755	6,197	0,005	0,182	0,182	568,299	0,047	0,021068966
Crushing/Proc.Equipment	2013	26	50	Crushing/Proc.Equipment_2013_50	5,908	2,248	6,467	5,628	0,007	0,545	0,545	568,299	0,202	0,090551724
Crushing/Proc.Equipment	2013	51	120	Crushing/Proc.Equipment_2013_120	4,758	0,958	3,94	5,845	0,006	0,532	0,532	568,299	0,086	0,038551724
Crushing/Proc.Equipment	2013	121	175	Crushing/Proc.Equipment_2013_175	6,588	0,659	3,267	5,177	0,006	0,293	0,293	568,299	0,059	0,026448276
Crushing/Proc.Equipment	2013	176	250	Crushing/Proc.Equipment_2013_250	6,27	0,429	1,26	4,695	0,006	0,144	0,144	568,299	0,038	0,017034483
Crushing/Proc.Equipment	2013	251	500	Crushing/Proc.Equipment_2013_500	8,85	0,396	1,289	4,121	0,005	0,134	0,134	568,299	0,035	0,015689655
Crushing/Proc.Equipment	2013	501	750	Crushing/Proc.Equipment_2013_750	14,055	0,399	1,273	4,285	0,005	0,136	0,136	568,299	0,036	0,016137931
Crushing/Proc.Equipment	2013	1001	9999	Crushing/Proc.Equipment_2013_9999	38,235	0,489	1,599	5,785	0,005	0,168	0,168	568,299	0,044	0,019724138
Crushing/Proc.Equipment	2014	26	50	Crushing/Proc.Equipment_2014_50	5,288	2,012	6,212	5,399	0,007	0,494	0,494	568,299	0,181	0,081137931
Crushing/Proc.Equipment	2014	51	120	Crushing/Proc.Equipment_2014_120	4,356	0,877	3,898	5,468	0,006	0,481	0,481	568,299	0,079	0,035413793
Crushing/Proc.Equipment	2014	121	175	Crushing/Proc.Equipment_2014_175	6,112	0,612	3,256	4,823	0,006	0,265	0,265	568,299	0,055	0,024655172
Crushing/Proc.Equipment	2014	176	250	Crushing/Proc.Equipment_2014_250	5,916	0,405	1,228	4,239	0,006	0,13	0,13	568,299	0,036	0,016137931
Crushing/Proc.Equipment	2014	251	500	Crushing/Proc.Equipment_2014_500	8,415	0,377	1,23	3,702	0,005	0,121	0,121	568,299	0,034	0,015241379
Crushing/Proc.Equipment	2014	501	750	Crushing/Proc.Equipment_2014_750	13,314	0,378	1,218	3,844	0,005	0,123	0,123	568,299	0,034	0,015241379
Crushing/Proc.Equipment	2014	1001	9999	Crushing/Proc.Equipment_2014_9999	35,652	0,456	1,46	5,391	0,005	0,155	0,155	568,299	0,041	0,01837931
Crushing/Proc.Equipment	2015	26	50	Crushing/Proc.Equipment_2015_50	4,722	1,796	5,996	5,195	0,007	0,446	0,446	568,299	0,162	0,07262069
Crushing/Proc.Equipment	2015	51	120	Crushing/Proc.Equipment_2015_120	3,959	0,797	3,859	5,04	0,006	0,43	0,43	568,299	0,071	0,031827586
Crushing/Proc.Equipment	2015	121	175	Crushing/Proc.Equipment_2015_175	5,614	0,562	3,247	4,343	0,006	0,237	0,237	568,299	0,05	0,022413793
Crushing/Proc.Equipment	2015	176	250	Crushing/Proc.Equipment_2015_250	5,585	0,382	1,201	3,801	0,006	0,117	0,117	568,299	0,034	0,015241379
Crushing/Proc.Equipment	2015	251	500	Crushing/Proc.Equipment_2015_500	8	0,358	1,184	3,304	0,005	0,109	0,109	568,299	0,032	0,014344828
Crushing/Proc.Equipment	2015	501	750	Crushing/Proc.Equipment_2015_750	12,614	0,358	1,176	3,422	0,005	0,111	0,111	568,299	0,032	0,014344828
Crushing/Proc.Equipment	2015	1001	9999	Crushing/Proc.Equipment_2015_9999	32,981	0,422	1,343	5,019	0,005	0,14	0,14	568,299	0,038	0,017034483
Crushing/Proc.Equipment	2016	26	50	Crushing/Proc.Equipment_2016_50	4,186	1,593	5,801	5,006	0,007	0,399	0,399	568,299	0,143	0,064103448
Crushing/Proc.Equipment	2016	51	120	Crushing/Proc.Equipment_2016_120	3,576	0,72	3,823	4,631	0,006	0,379	0,379	568,299	0,065	0,029137931
Crushing/Proc.Equipment	2016	121	175	Crushing/Proc.Equipment_2016_175	5,132	0,513	3,241	3,883	0,006	0,21	0,21	568,299	0,046	0,02062069
Crushing/Proc.Equipment	2016	176	250	Crushing/Proc.Equipment_2016_250	5,267	0,36	1,178	3,381	0,006	0,105	0,105	568,299	0,032	0,014344828
Crushing/Proc.Equipment	2016	251	500	Crushing/Proc.Equipment_2016_500	7,601	0,34	1,146	2,928	0,005	0,098	0,098	568,299	0,03	0,013448276
Crushing/Proc.Equipment	2016	501	750	Crushing/Proc.Equipment_2016_750	11,944	0,339	1,14	3,021	0,005	0,099	0,099	568,299	0,03	0,013448276
Crushing/Proc.Equipment	2016	1001	9999	Crushing/Proc.Equipment_2016_9999	31,036	0,397	1,274	4,7	0,005	0,127	0,127	568,299	0,035	0,015689655
Crushing/Proc.Equipment	2017	26	50	Crushing/Proc.Equipment_2017_50	3,684	1,402	5,623	4,827	0,007	0,354	0,354	568,299	0,126	0,056482759
Crushing/Proc.Equipment	2017	51	120	Crushing/Proc.Equipment_2017_120	3,216	0,647	3,791	4,244	0,006	0,33	0,33	568,299	0,058	0,026
Crushing/Proc.Equipment	2017	121	175	Crushing/Proc.Equipment_2017_175	4,681	0,468	3,236	3,45	0,006	0,185	0,185	568,299	0,042	0,018827586
Crushing/Proc.Equipment	2017	176	250	Crushing/Proc.Equipment_2017_250	4,974	0,34	1,16	2,987	0,006	0,094	0,094	568,299	0,03	0,013448276
Crushing/Proc.Equipment	2017	251	500	Crushing/Proc.Equipment_2017_500	7,242	0,324	1,118	2,602	0,005	0,088	0,088	568,299	0,029	0,013
Crushing/Proc.Equipment	2017	501	750	Crushing/Proc.Equipment_2017_750	11,359	0,323	1,114	2,664	0,005	0,088	0,088	568,299	0,029	0,013
Crushing/Proc.Equipment	2017	1001	9999	Crushing/Proc.Equipment_2017_9999	29,544	0,378	1,231	4,423	0,005	0,117	0,117	568,299	0,034	0,015241379
Crushing/Proc.Equipment	2018	26	50	Crushing/Proc.Equipment_2018_50	3,219	1,225	5,461	4,657	0,007	0,31	0,31	568,299	0,11	0,049310345
Crushing/Proc.Equipment	2018	51	120	Crushing/Proc.Equipment_2018_120	2,881	0,58	3,763	3,881	0,006	0,284	0,284	568,299	0,052	0,023310345
Crushing/Proc.Equipment	2018	121	175	Crushing/Proc.Equipment_2018_175	4,267	0,427	3,234	3,049	0,006	0,161	0,161	568,299	0,038	0,017034483
Crushing/Proc.Equipment	2018	176	250	Crushing/Proc.Equipment_2018_250	4,701	0,322	1,146	2,622	0,006	0,083	0,083	568,299	0,029	0,013
Crushing/Proc.Equipment	2018	251	500	Crushing/Proc.Equipment_2018_500	6,912	0,309	1,099	2,312	0,005	0,079	0,079	568,299	0,027	0,012103448
Crushing/Proc.Equipment	2018	501	750	Crushing/Proc.Equipment_2018_750	10,84	0,308	1,097	2,358	0,005	0,079	0,079	568,299	0,027	0,012103448
Crushing/Proc.Equipment	2018	1001	9999	Crushing/Proc.Equipment_2018_9999	28,23	0,361	1,198	4,168	0,005	0,107	0,107	568,299	0,032	0,014344828
Crushing/Proc.Equipment	2019	26	50	Crushing/Proc.Equipment_2019_50	2,798	1,064	5,316	4,495	0,007	0,269	0,269	568,299	0,096	0,043034483
Crushing/Proc.Equipment	2019	51	120	Crushing/Proc.Equipment_2019_120	2,577	0,519	3,739	3,544	0,006	0,241	0,241	568,299	0,046	0,02062069
Crushing/Proc.Equipment	2019	121	175	Crushing/Proc.Equipment_2019_175	3,938	0,394	3,233	2,7	0,006	0,141	0,141	568,299	0,035	0,015689655
Crushing/Proc.Equipment	2019	176	250	Crushing/Proc.Equipment_2019_250	4,451	0,304	1,134	2,3	0,006	0,074	0,074	568,299	0,027	0,012103448
Crushing/Proc.Equipment	2019	251	500	Crushing/Proc.Equipment_2019_500	6,592	0,295	1,087	2,046	0,005	0,071	0,071	568,299	0,026	0,011655172
Crushing/Proc.Equipment	2019	501	750	Crushing/Proc.Equipment_2019_750	10,352	0,294	1,085	2,085	0,005	0,071	0,071	568,299	0,026	0,011655172
Crushing/Proc.Equipment	2019	1001	9999	Crushing/Proc.Equipment_2019_9999	26,978	0,345	1,173	3,927	0,005	0,098	0,098	568,299	0,031	0,013896552
Crushing/Proc.Equipment	2020	26	50	Crushing/Proc.Equipment_2020_50	2,489	0,947	5,211	4,347	0,007	0,233	0,233	568,299	0,085	0,038103448
Crushing/Proc.Equipment	2020	51	120	Crushing/Proc.Equipment_2020_120	2,348	0,473	3,722	3,249	0,006	0,206	0,206	568,299	0,042	0,018827586
Crushing/Proc.Equipment	2020	121	175	Crushing/Proc.Equipment_2020_175	3,673	0,367	3,234	2,392	0,006	0,124	0,124	568,299	0,033	0,014793103
Crushing/Proc.Equipment	2020	176	250	Crushing/Proc.Equipment_2020_250	4,222	0,289	1,125	2,014	0,006	0,065	0,065	568,299	0,026	0,011655172
Crushing/Proc.Equipment	2020	251	500	Crushing/Proc.Equipment_2020_500	6,283	0,281	1,078	1,799	0,005	0,063	0,063	568,299	0,025	0,011206897
Crushing/Proc.Equipment	2020	501	750	Crushing/Proc.Equipment_2020_750	9,884	0,281	1,077	1,835	0,005	0,063	0,063	568,299	0,025	0,011206897
Crushing/Proc.Equipment	2020	1001	9999	Crushing/Proc.Equipment_2020_9999	25,755	0,329	1,153	3,699	0,005	0,089	0,089	568,299	0,029	0,013
Crushing/Proc.Equipment	2021	26	50	Crushing/Proc.Equipment_2021_50	2,265	0,862	5,136	4,211	0,007	0,201	0,201	568,299	0,077	0,034517241
Crushing/Proc.Equipment	2021	51	120	Crushing/Proc.Equipment_2021_120	2,176	0,438	3,711	2,989	0,006	0,178	0,178	568,299	0,039	0,017482759

Crushing/Proc.Equipment	2021	121	175	Crushing/Proc.Equipment_2021_175	3,442	0,344	3,235	2,114	0,006	0,109	0,109	568,299	0,031	0,013896552
Crushing/Proc.Equipment	2021	176	250	Crushing/Proc.Equipment_2021_250	4,009	0,274	1,119	1,756	0,006	0,057	0,057	568,299	0,024	0,010758621
Crushing/Proc.Equipment	2021	251	500	Crushing/Proc.Equipment_2021_500	5,988	0,268	1,072	1,574	0,005	0,055	0,055	568,3	0,024	0,010758621
Crushing/Proc.Equipment	2021	501	750	Crushing/Proc.Equipment_2021_750	9,434	0,268	1,072	1,606	0,005	0,055	0,055	568,299	0,024	0,010758621
Crushing/Proc.Equipment	2021	1001	9999	Crushing/Proc.Equipment_2021_9999	24,586	0,314	1,136	3,487	0,005	0,08	0,08	568,299	0,028	0,012551724
Crushing/Proc.Equipment	2022	26	50	Crushing/Proc.Equipment_2022_50	2,09	0,795	5,081	4,083	0,007	0,172	0,172	568,299	0,071	0,031827586
Crushing/Proc.Equipment	2022	51	120	Crushing/Proc.Equipment_2022_120	2,036	0,41	3,704	2,758	0,006	0,154	0,154	568,299	0,037	0,016586207
Crushing/Proc.Equipment	2022	121	175	Crushing/Proc.Equipment_2022_175	3,231	0,323	3,237	1,861	0,006	0,095	0,095	568,299	0,029	0,013
Crushing/Proc.Equipment	2022	176	250	Crushing/Proc.Equipment_2022_250	3,808	0,26	1,114	1,521	0,006	0,05	0,05	568,299	0,023	0,010310345
Crushing/Proc.Equipment	2022	251	500	Crushing/Proc.Equipment_2022_500	5,706	0,255	1,067	1,389	0,005	0,048	0,048	568,299	0,023	0,010310345
Crushing/Proc.Equipment	2022	501	750	Crushing/Proc.Equipment_2022_750	9,002	0,256	1,067	1,416	0,005	0,048	0,048	568,299	0,023	0,010310345
Crushing/Proc.Equipment	2022	1001	9999	Crushing/Proc.Equipment_2022_9999	23,492	0,3	1,121	3,31	0,005	0,073	0,073	568,299	0,027	0,012103448
Crushing/Proc.Equipment	2023	26	50	Crushing/Proc.Equipment_2023_50	1,944	0,739	5,039	3,962	0,007	0,146	0,146	568,299	0,066	0,029586207
Crushing/Proc.Equipment	2023	51	120	Crushing/Proc.Equipment_2023_120	1,914	0,385	3,7	2,552	0,006	0,132	0,132	568,299	0,034	0,015241379
Crushing/Proc.Equipment	2023	121	175	Crushing/Proc.Equipment_2023_175	3,042	0,304	3,24	1,654	0,006	0,083	0,083	568,299	0,027	0,012103448
Crushing/Proc.Equipment	2023	176	250	Crushing/Proc.Equipment_2023_250	3,623	0,248	1,111	1,33	0,006	0,043	0,043	568,299	0,022	0,009862069
Crushing/Proc.Equipment	2023	251	500	Crushing/Proc.Equipment_2023_500	5,444	0,244	1,064	1,227	0,005	0,042	0,042	568,299	0,022	0,009862069
Crushing/Proc.Equipment	2023	501	750	Crushing/Proc.Equipment_2023_750	8,598	0,244	1,065	1,251	0,005	0,042	0,042	568,3	0,022	0,009862069
Crushing/Proc.Equipment	2023	1001	9999	Crushing/Proc.Equipment_2023_9999	22,463	0,287	1,107	3,16	0,005	0,066	0,066	568,299	0,025	0,011206897
Crushing/Proc.Equipment	2024	26	50	Crushing/Proc.Equipment_2024_50	1,825	0,694	5,008	3,85	0,007	0,125	0,125	568,299	0,062	0,027793103
Crushing/Proc.Equipment	2024	51	120	Crushing/Proc.Equipment_2024_120	1,81	0,364	3,697	2,389	0,006	0,112	0,112	568,299	0,032	0,014344828
Crushing/Proc.Equipment	2024	121	175	Crushing/Proc.Equipment_2024_175	2,866	0,287	3,243	1,472	0,006	0,071	0,071	568,299	0,025	0,011206897
Crushing/Proc.Equipment	2024	176	250	Crushing/Proc.Equipment_2024_250	3,448	0,236	1,109	1,165	0,006	0,036	0,036	568,299	0,021	0,009413793
Crushing/Proc.Equipment	2024	251	500	Crushing/Proc.Equipment_2024_500	5,193	0,232	1,062	1,077	0,005	0,035	0,035	568,299	0,021	0,009413793
Crushing/Proc.Equipment	2024	501	750	Crushing/Proc.Equipment_2024_750	8,207	0,233	1,063	1,098	0,005	0,036	0,036	568,299	0,021	0,009413793
Crushing/Proc.Equipment	2024	1001	9999	Crushing/Proc.Equipment_2024_9999	21,454	0,274	1,096	3,029	0,005	0,059	0,059	568,299	0,024	0,010758621
Crushing/Proc.Equipment	2025	26	50	Crushing/Proc.Equipment_2025_50	1,724	0,656	4,982	3,742	0,007	0,107	0,107	568,299	0,059	0,026448276
Crushing/Proc.Equipment	2025	51	120	Crushing/Proc.Equipment_2025_120	1,716	0,345	3,694	2,248	0,006	0,095	0,095	568,299	0,031	0,013896552
Crushing/Proc.Equipment	2025	121	175	Crushing/Proc.Equipment_2025_175	2,696	0,27	3,246	1,301	0,006	0,06	0,06	568,299	0,024	0,010758621
Crushing/Proc.Equipment	2025	176	250	Crushing/Proc.Equipment_2025_250	3,279	0,224	1,108	1,012	0,006	0,031	0,031	568,299	0,02	0,008965517
Crushing/Proc.Equipment	2025	251	500	Crushing/Proc.Equipment_2025_500	4,95	0,221	1,061	0,937	0,005	0,03	0,03	568,299	0,02	0,008965517
Crushing/Proc.Equipment	2025	501	750	Crushing/Proc.Equipment_2025_750	7,826	0,222	1,061	0,955	0,005	0,03	0,03	568,299	0,02	0,008965517
Crushing/Proc.Equipment	2025	1001	9999	Crushing/Proc.Equipment_2025_9999	20,429	0,261	1,087	2,91	0,005	0,053	0,053	568,299	0,023	0,010310345
Crushing/Proc.Equipment	2030	26	50	Crushing/Proc.Equipment_2030_50	1,381	0,525	4,857	3,351	0,007	0,043	0,043	568,299	0,047	0,021068966
Crushing/Proc.Equipment	2030	51	120	Crushing/Proc.Equipment_2030_120	1,35	0,272	3,673	1,708	0,006	0,038	0,038	568,299	0,024	0,010758621
Crushing/Proc.Equipment	2030	121	175	Crushing/Proc.Equipment_2030_175	1,976	0,197	3,244	0,6	0,006	0,025	0,025	568,299	0,017	0,00762069
Crushing/Proc.Equipment	2030	176	250	Crushing/Proc.Equipment_2030_250	2,701	0,185	1,105	0,502	0,006	0,017	0,017	568,299	0,016	0,007172414
Crushing/Proc.Equipment	2030	251	500	Crushing/Proc.Equipment_2030_500	4,113	0,184	1,058	0,476	0,005	0,017	0,017	568,299	0,016	0,007172414
Crushing/Proc.Equipment	2030	501	750	Crushing/Proc.Equipment_2030_750	6,473	0,184	1,058	0,478	0,005	0,017	0,017	568,299	0,016	0,007172414
Crushing/Proc.Equipment	2030	1001	9999	Crushing/Proc.Equipment_2030_9999	15,345	0,196	1,059	2,59	0,005	0,032	0,032	568,299	0,017	0,00762069
Crushing/Proc.Equipment	2035	26	50	Crushing/Proc.Equipment_2035_50	1,282	0,487	4,819	3,237	0,007	0,023	0,023	568,299	0,044	0,019724138
Crushing/Proc.Equipment	2035	51	120	Crushing/Proc.Equipment_2035_120	1,236	0,249	3,665	1,531	0,006	0,02	0,02	568,299	0,022	0,009862069
Crushing/Proc.Equipment	2035	121	175	Crushing/Proc.Equipment_2035_175	1,76	0,176	3,242	0,382	0,006	0,015	0,015	568,299	0,015	0,006724138
Crushing/Proc.Equipment	2035	176	250	Crushing/Proc.Equipment_2035_250	2,521	0,172	1,104	0,342	0,006	0,012	0,012	568,3	0,015	0,006724138
Crushing/Proc.Equipment	2035	251	500	Crushing/Proc.Equipment_2035_500	3,852	0,172	1,058	0,338	0,005	0,012	0,012	568,299	0,015	0,006724138
Crushing/Proc.Equipment	2035	501	750	Crushing/Proc.Equipment_2035_750	6,064	0,172	1,058	0,338	0,005	0,012	0,012	568,299	0,015	0,006724138
Crushing/Proc.Equipment	2035	1001	9999	Crushing/Proc.Equipment_2035_9999	13,865	0,177	1,058	2,482	0,005	0,026	0,026	568,299	0,016	0,007172414
Crushing/Proc.Equipment	2040	26	50	Crushing/Proc.Equipment_2040_50	1,284	0,488	4,833	3,194	0,007	0,017	0,017	568,299	0,044	0,019724138
Crushing/Proc.Equipment	2040	51	120	Crushing/Proc.Equipment_2040_120	1,219	0,245	3,67	1,477	0,006	0,015	0,015	568,299	0,022	0,009862069
Crushing/Proc.Equipment	2040	121	175	Crushing/Proc.Equipment_2040_175	1,698	0,17	3,246	0,306	0,006	0,012	0,012	568,299	0,015	0,006724138
Crushing/Proc.Equipment	2040	176	250	Crushing/Proc.Equipment_2040_250	2,464	0,168	1,106	0,292	0,006	0,011	0,011	568,299	0,015	0,006724138
Crushing/Proc.Equipment	2040	251	500	Crushing/Proc.Equipment_2040_500	3,766	0,168	1,059	0,292	0,005	0,011	0,011	568,299	0,015	0,006724138
Crushing/Proc.Equipment	2040	501	750	Crushing/Proc.Equipment_2040_750	5,941	0,169	1,059	0,292	0,005	0,011	0,011	568,299	0,015	0,006724138
Crushing/Proc.Equipment	2040	1001	9999	Crushing/Proc.Equipment_2040_9999	13,333	0,17	1,059	2,457	0,005	0,024	0,024	568,299	0,015	0,006724138
Dumpers/Tenders	1990	16	25	Dumpers/Tenders_1990_25	2,645	2,213	4,999	6,919	0,855	0,741	0,741	568,299	0,199	0,089206897
Dumpers/Tenders	2000	16	25	Dumpers/Tenders_2000_25	2,444	2,045	4,69	6,397	0,065	0,571	0,571	568,299	0,184	0,082482759
Dumpers/Tenders	2005	16	25	Dumpers/Tenders_2005_25	1,554	1,3	3,337	5,74	0,065	0,426	0,426	568,299	0,117	0,052448276
Dumpers/Tenders	2010	16	25	Dumpers/Tenders_2010_25	0,963	0,806	2,507	4,804	0,007	0,271	0,271	568,299	0,072	0,032275862
Dumpers/Tenders	2011	16	25	Dumpers/Tenders_2011_25	0,921	0,771	2,456	4,686	0,007	0,251	0,251	568,299	0,069	0,030931034
Dumpers/Tenders	2012	16	25	Dumpers/Tenders_2012_25	0,887	0,742	2,416	4,576	0,007	0,232	0,232	568,299	0,066	0,029586207
Dumpers/Tenders	2013	16	25	Dumpers/Tenders_2013_25	0,86	0,719	2,385	4,477	0,007	0,216	0,216	568,3	0,064	0,028689655
Dumpers/Tenders	2014	16	25	Dumpers/Tenders_2014_25	0,842	0,705	2,364	4,433	0,007	0,2	0,2	568,3	0,063	0,028241379
Dumpers/Tenders	2015	16	25	Dumpers/Tenders_2015_25	0,831	0,696	2,35	4,402	0,007	0,187	0,187	568,299	0,062	0,027793103
Dumpers/Tenders	2016	16	25	Dumpers/Tenders_2016_25	0,825	0,69	2,342	4,378	0,007	0,175	0,175	568,299	0,062	0,027793103
Dumpers/Tenders	2017	16	25	Dumpers/Tenders_2017_25	0,821	0,687	2,34	4,362	0,007	0,171	0,171	568,299	0,062	0,027793103
Dumpers/Tenders	2018	16	25	Dumpers/Tenders_2018_25	0,82	0,686	2,339	4,35	0,007	0,169	0,169	568,299	0,061	0,027344828
Dumpers/Tenders	2019	16	25	Dumpers/Tenders_2019_25	0,82	0,686	2,339	4,341	0,007	0,167	0,167	568,299	0,061	0,027344828
Dumpers/Tenders	2020	16	25	Dumpers/Tenders_2020_25	0,819	0,685	2,339	4,336	0,007	0,165	0,165	568,299	0,061	0,027344828
Dumpers/Tenders	2021	16	25	Dumpers/Tenders_2021_25	0,819	0,685	2,339	4,333	0,007	0,163	0,163	568,299	0,061	0,027344828
Dumpers/Tenders	2022	16	25	Dumpers/Tenders_2022_25	0,819	0,685	2,339	4,332	0,007	0,162	0,162	568,299	0,061	0,027344828
Dumpers/Tenders	2023	16	25	Dumpers/Tenders_2023_25	0,819	0,685	2,339	4,332	0,007	0,162	0,162	568,299	0,061	0,027344828
Dumpers/Tenders	2024	16	25	Dumpers/Tenders_2024_25	0,819	0,685	2,34	4,332	0,007	0,161	0,161	568,299	0,061	0,027344828
Dumpers/Tenders	2025	16	25	Dumpers/Tenders_2025_25	0,819	0,685	2,339	4,332	0,007	0,161	0,161	568,299	0,061	0,027344828

Dumpers/Tenders	2030	16	25	Dumpers/Tenders_2030_25	0,819	0,685	2,34	4,332	0,007	0,161	0,161	568,299	0,061	0,027344828
Dumpers/Tenders	2035	16	25	Dumpers/Tenders_2035_25	0,819	0,685	2,339	4,332	0,007	0,161	0,161	568,299	0,061	0,027344828
Dumpers/Tenders	2040	16	25	Dumpers/Tenders_2040_25	0,819	0,685	2,339	4,332	0,007	0,161	0,161	568,299	0,061	0,027344828
Excavators	1990	16	25	Excavators_1990_25	5,933	2,213	4,999	6,919	0,855	0,741	0,741	568,299	0,199	0,089206897
Excavators	1990	26	50	Excavators_1990_50	21,032	5,155	10,359	8,08	0,871	1,341	1,341	568,299	0,465	0,208448276
Excavators	1990	51	120	Excavators_1990_120	29,647	2,469	5,901	15,421	0,791	1,413	1,413	568,299	0,222	0,099517241
Excavators	1990	121	175	Excavators_1990_175	35,634	1,947	5,271	15,075	0,758	1,096	1,096	568,299	0,175	0,078448276
Excavators	1990	176	250	Excavators_1990_250	50,388	1,947	5,271	15,075	0,758	1,096	1,096	568,299	0,175	0,078448276
Excavators	1990	251	500	Excavators_1990_500	65,206	1,71	12,155	14,225	0,662	0,93	0,93	568,3	0,154	0,069034483
Excavators	1990	501	750	Excavators_1990_750	108,079	1,71	12,155	14,225	1,018	0,947	0,947	568,299	0,154	0,069034483
Excavators	2000	16	25	Excavators_2000_25	4,937	1,841	4,315	6,281	0,065	0,543	0,543	568,299	0,166	0,074413793
Excavators	2000	26	50	Excavators_2000_50	18,836	4,616	9,494	7,102	0,066	0,958	0,958	568,299	0,416	0,186482759
Excavators	2000	51	120	Excavators_2000_120	21,925	1,826	4,602	10,156	0,06	0,913	0,913	568,299	0,164	0,073517241
Excavators	2000	121	175	Excavators_2000_175	22,624	1,236	3,672	9,345	0,057	0,525	0,525	568,299	0,111	0,049758621
Excavators	2000	176	250	Excavators_2000_250	25,927	1,001	2,794	8,952	0,057	0,409	0,409	568,299	0,09	0,040344828
Excavators	2000	251	500	Excavators_2000_500	34,719	0,91	3,974	8,491	0,05	0,362	0,362	568,299	0,082	0,036758621
Excavators	2000	501	750	Excavators_2000_750	57,546	0,91	3,974	8,491	0,052	0,362	0,362	568,299	0,082	0,036758621
Excavators	2005	16	25	Excavators_2005_25	2,091	0,779	2,397	5,219	0,065	0,319	0,319	568,299	0,07	0,03137931
Excavators	2005	26	50	Excavators_2005_50	16,217	3,974	8,597	6,562	0,066	0,871	0,871	568,299	0,358	0,160482759
Excavators	2005	51	120	Excavators_2005_120	19,001	1,582	4,354	8,632	0,06	0,853	0,853	568,299	0,142	0,063655172
Excavators	2005	121	175	Excavators_2005_175	18,9	1,032	3,452	7,905	0,057	0,461	0,461	568,299	0,093	0,041689655
Excavators	2005	176	250	Excavators_2005_250	18,379	0,71	1,892	7,456	0,057	0,276	0,276	568,299	0,064	0,028689655
Excavators	2005	251	500	Excavators_2005_500	24,005	0,629	2,194	6,685	0,05	0,248	0,248	568,299	0,056	0,025103448
Excavators	2005	501	750	Excavators_2005_750	40,443	0,64	2,192	6,888	0,052	0,251	0,251	568,299	0,057	0,025551724
Excavators	2010	16	25	Excavators_2010_25	0,993664	0,835	4,56926	5,19123	0,005	0,413	0,38	584,0737	0,17	0,076206897
Excavators	2010	26	50	Excavators_2010_50	0,993664	0,835	4,56926	5,19123	0,005	0,413	0,38	584,0737	0,17	0,076206897
Excavators	2010	51	120	Excavators_2010_120	0,73275	0,616	3,69337	6,10169	0,005	0,469	0,432	518,9941	0,151	0,067689655
Excavators	2010	121	175	Excavators_2010_175	0,572846	0,481	3,1674	5,82964	0,005	0,299	0,275	525,0484	0,153	0,068586207
Excavators	2010	176	250	Excavators_2010_250	0,422004	0,355	1,45526	5,78636	0,005	0,182	0,167	525,2427	0,153	0,068586207
Excavators	2010	251	500	Excavators_2010_500	0,315965	0,265	1,44794	4,38582	0,005	0,143	0,132	522,2909	0,152	0,068137931
Excavators	2010	501	750	Excavators_2010_750	0,327987	0,276	1,53784	4,52996	0,005	0,149	0,137	520,4269	0,151	0,067689655
Excavators	2011	16	25	Excavators_2011_25	0,999474	0,84	4,67202	5,21824	0,005	0,413	0,38	582,8586	0,17	0,076206897
Excavators	2011	26	50	Excavators_2011_50	0,999474	0,84	4,67202	5,21824	0,005	0,413	0,38	582,8586	0,17	0,076206897
Excavators	2011	51	120	Excavators_2011_120	0,675188	0,567	3,65807	5,70006	0,005	0,436	0,401	517,4139	0,151	0,067689655
Excavators	2011	121	175	Excavators_2011_175	0,533269	0,448	3,15702	5,44943	0,005	0,278	0,255	523,5178	0,153	0,068586207
Excavators	2011	176	250	Excavators_2011_250	0,400356	0,336	1,41809	5,41822	0,005	0,171	0,157	523,6886	0,153	0,068586207
Excavators	2011	251	500	Excavators_2011_500	0,303301	0,255	1,41288	4,1131	0,005	0,133	0,123	521,2972	0,152	0,068137931
Excavators	2011	501	750	Excavators_2011_750	0,326107	0,274	1,47034	4,42127	0,005	0,146	0,134	519,1221	0,151	0,067689655
Excavators	2012	16	25	Excavators_2012_25	1,018057	0,855	4,79179	5,19511	0,005	0,412	0,379	581,4648	0,17	0,076206897
Excavators	2012	26	50	Excavators_2012_50	1,018057	0,855	4,79179	5,19511	0,005	0,412	0,379	581,4648	0,17	0,076206897
Excavators	2012	51	120	Excavators_2012_120	0,67458	0,567	3,68099	5,63138	0,005	0,434	0,399	516,083	0,151	0,067689655
Excavators	2012	121	175	Excavators_2012_175	0,534632	0,449	3,17839	5,38897	0,005	0,275	0,253	522,0959	0,153	0,068586207
Excavators	2012	176	250	Excavators_2012_250	0,402641	0,338	1,42562	5,32577	0,005	0,169	0,155	522,4958	0,153	0,068586207
Excavators	2012	251	500	Excavators_2012_500	0,308496	0,259	1,4255	4,05714	0,005	0,131	0,121	520,034	0,152	0,068137931
Excavators	2012	501	750	Excavators_2012_750	0,334165	0,281	1,47962	4,3898	0,005	0,145	0,134	517,8167	0,151	0,067689655
Excavators	2013	16	25	Excavators_2013_25	0,995402	0,836	4,80774	5,0526	0,005	0,393	0,362	578,236	0,17	0,076206897
Excavators	2013	26	50	Excavators_2013_50	0,995402	0,836	4,80774	5,0526	0,005	0,393	0,362	578,236	0,17	0,076206897
Excavators	2013	51	120	Excavators_2013_120	0,639011	0,537	3,66866	5,3703	0,005	0,404	0,372	513,7321	0,151	0,067689655
Excavators	2013	121	175	Excavators_2013_175	0,503929	0,423	3,16966	5,08991	0,005	0,253	0,233	519,496	0,153	0,068586207
Excavators	2013	176	250	Excavators_2013_250	0,383779	0,322	1,40068	4,93756	0,005	0,157	0,145	519,8753	0,153	0,068586207
Excavators	2013	251	500	Excavators_2013_500	0,295491	0,248	1,38754	3,73509	0,005	0,121	0,111	517,7809	0,152	0,068137931
Excavators	2013	501	750	Excavators_2013_750	0,301827	0,254	1,36166	3,92892	0,005	0,126	0,116	514,1872	0,151	0,067689655
Excavators	2014	16	25	Excavators_2014_25	0,981904	0,825	4,84434	4,96504	0,005	0,38	0,35	575,2674	0,17	0,076206897
Excavators	2014	26	50	Excavators_2014_50	0,981904	0,825	4,84434	4,96504	0,005	0,38	0,35	575,2674	0,17	0,076206897
Excavators	2014	51	120	Excavators_2014_120	0,610505	0,513	3,66313	5,13137	0,005	0,382	0,352	511,3057	0,151	0,067689655
Excavators	2014	121	175	Excavators_2014_175	0,464169	0,39	3,15438	4,65701	0,005	0,229	0,211	516,9066	0,153	0,068586207
Excavators	2014	176	250	Excavators_2014_250	0,350137	0,294	1,34557	4,37384	0,005	0,139	0,128	517,3234	0,153	0,068586207
Excavators	2014	251	500	Excavators_2014_500	0,276896	0,233	1,32721	3,35284	0,005	0,108	0,099	515,2151	0,152	0,068137931
Excavators	2014	501	750	Excavators_2014_750	0,284069	0,239	1,34745	3,54089	0,005	0,114	0,105	511,9453	0,151	0,067689655
Excavators	2015	16	25	Excavators_2015_25	0,991068	0,833	4,92488	4,91817	0,005	0,375	0,345	569,5116	0,17	0,076206897
Excavators	2015	26	50	Excavators_2015_50	0,991068	0,833	4,92488	4,91817	0,005	0,375	0,345	569,5116	0,17	0,076206897
Excavators	2015	51	120	Excavators_2015_120	0,60346	0,507	3,67943	5,01907	0,005	0,373	0,344	506,1727	0,151	0,067689655
Excavators	2015	121	175	Excavators_2015_175	0,456597	0,384	3,16762	4,4807	0,005	0,221	0,203	511,6869	0,153	0,068586207
Excavators	2015	176	250	Excavators_2015_250	0,343545	0,289	1,33148	4,18222	0,005	0,133	0,122	512,0555	0,153	0,068586207
Excavators	2015	251	500	Excavators_2015_500	0,276143	0,232	1,31662	3,21395	0,005	0,104	0,096	509,8675	0,152	0,068137931
Excavators	2015	501	750	Excavators_2015_750	0,28808	0,242	1,35372	3,47287	0,005	0,113	0,104	506,6816	0,151	0,067689655
Excavators	2016	16	25	Excavators_2016_25	0,970016	0,815	4,94198	4,82432	0,005	0,359	0,33	563,8026	0,17	0,076206897
Excavators	2016	26	50	Excavators_2016_50	0,970016	0,815	4,94198	4,82432	0,005	0,359	0,33	563,8026	0,17	0,076206897
Excavators	2016	51	120	Excavators_2016_120	0,566011	0,476	3,66066	4,70806	0,005	0,344	0,317	500,9659	0,151	0,067689655
Excavators	2016	121	175	Excavators_2016_175	0,425494	0,358	3,15771	4,08095	0,005	0,201	0,185	506,495	0,153	0,068586207
Excavators	2016	176	250	Excavators_2016_250	0,312033	0,262	1,27749	3,66736	0,005	0,116	0,107	506,544	0,153	0,068586207
Excavators	2016	251	500	Excavators_2016_500	0,253752	0,213	1,23344	2,81451	0,005	0,091	0,083	504,2899	0,152	0,068137931
Excavators	2016	501	750	Excavators_2016_750	0,287698	0,242	1,34881	3,35762	0,005	0,11	0,101	501,6596	0,151	0,067689655

Excavators	2017	16	25	Excavators_2017_25	0,91741	0,771	4,88904	4,67818	0,005	0,332	0,305	554,9101	0,17	0,076206897
Excavators	2017	26	50	Excavators_2017_50	0,91741	0,771	4,88904	4,67818	0,005	0,332	0,305	554,9101	0,17	0,076206897
Excavators	2017	51	120	Excavators_2017_120	0,523542	0,44	3,63939	4,37952	0,005	0,31	0,285	493,409	0,151	0,067689655
Excavators	2017	121	175	Excavators_2017_175	0,397029	0,334	3,15091	3,69967	0,005	0,182	0,167	498,5222	0,153	0,068586207
Excavators	2017	176	250	Excavators_2017_250	0,293543	0,247	1,24911	3,31872	0,005	0,105	0,097	498,4364	0,153	0,068586207
Excavators	2017	251	500	Excavators_2017_500	0,237788	0,2	1,19852	2,50715	0,005	0,081	0,075	496,8098	0,152	0,068137931
Excavators	2017	501	750	Excavators_2017_750	0,249769	0,21	1,22803	2,71934	0,005	0,09	0,083	494,5496	0,152	0,068137931
Excavators	2018	16	25	Excavators_2018_25	0,818091	0,687	4,70022	4,39518	0,005	0,284	0,261	545,3468	0,17	0,076206897
Excavators	2018	26	50	Excavators_2018_50	0,818091	0,687	4,70022	4,39518	0,005	0,284	0,261	545,3468	0,17	0,076206897
Excavators	2018	51	120	Excavators_2018_120	0,438055	0,368	3,56214	3,76366	0,005	0,25	0,23	486,056	0,151	0,067689655
Excavators	2018	121	175	Excavators_2018_175	0,324959	0,273	3,09338	2,92361	0,005	0,142	0,13	490,6725	0,153	0,068586207
Excavators	2018	176	250	Excavators_2018_250	0,240329	0,202	1,15209	2,59377	0,005	0,079	0,073	490,2569	0,153	0,068586207
Excavators	2018	251	500	Excavators_2018_500	0,207823	0,175	1,13951	2,05045	0,005	0,066	0,061	489,1025	0,152	0,068137931
Excavators	2018	501	750	Excavators_2018_750	0,22476	0,189	1,22359	2,26567	0,005	0,076	0,07	487,6528	0,152	0,068137931
Excavators	2019	16	25	Excavators_2019_25	0,75855	0,637	4,59698	4,19867	0,005	0,25	0,23	536,9132	0,17	0,076206897
Excavators	2019	26	50	Excavators_2019_50	0,75855	0,637	4,59698	4,19867	0,005	0,25	0,23	536,9132	0,17	0,076206897
Excavators	2019	51	120	Excavators_2019_120	0,386598	0,325	3,52421	3,36874	0,005	0,211	0,194	478,2452	0,151	0,067689655
Excavators	2019	121	175	Excavators_2019_175	0,293021	0,246	3,08163	2,53264	0,005	0,122	0,112	482,6838	0,153	0,068586207
Excavators	2019	176	250	Excavators_2019_250	0,220917	0,186	1,12671	2,24187	0,005	0,068	0,063	482,2503	0,153	0,068586207
Excavators	2019	251	500	Excavators_2019_500	0,192898	0,162	1,1135	1,77986	0,005	0,058	0,053	481,2361	0,152	0,068137931
Excavators	2019	501	750	Excavators_2019_750	0,209677	0,176	1,17289	1,98661	0,005	0,067	0,062	479,2876	0,152	0,068137931
Excavators	2020	16	25	Excavators_2020_25	0,705964	0,593	4,50032	4,03131	0,005	0,222	0,204	525,3675	0,17	0,076206897
Excavators	2020	26	50	Excavators_2020_50	0,705964	0,593	4,50032	4,03131	0,005	0,222	0,204	525,3675	0,17	0,076206897
Excavators	2020	51	120	Excavators_2020_120	0,356064	0,299	3,50495	3,08964	0,005	0,185	0,17	468,0546	0,151	0,067689655
Excavators	2020	121	175	Excavators_2020_175	0,275327	0,231	3,08597	2,27838	0,005	0,11	0,102	472,2891	0,153	0,068586207
Excavators	2020	176	250	Excavators_2020_250	0,211076	0,177	1,11778	2,02738	0,005	0,061	0,056	471,8828	0,153	0,068586207
Excavators	2020	251	500	Excavators_2020_500	0,182542	0,153	1,1016	1,57199	0,005	0,052	0,048	470,2956	0,152	0,068137931
Excavators	2020	501	750	Excavators_2020_750	0,202011	0,17	1,14543	1,79718	0,005	0,061	0,056	468,8706	0,152	0,068137931
Excavators	2021	16	25	Excavators_2021_25	0,669315	0,562	4,46094	3,91866	0,005	0,202	0,186	525,3774	0,17	0,076206897
Excavators	2021	26	50	Excavators_2021_50	0,669315	0,562	4,46094	3,91866	0,005	0,202	0,186	525,3774	0,17	0,076206897
Excavators	2021	51	120	Excavators_2021_120	0,327314	0,275	3,49196	2,84891	0,005	0,161	0,148	467,7906	0,151	0,067689655
Excavators	2021	121	175	Excavators_2021_175	0,257574	0,216	3,08975	2,03357	0,005	0,099	0,091	472,3586	0,153	0,068586207
Excavators	2021	176	250	Excavators_2021_250	0,193738	0,163	1,10324	1,70572	0,005	0,052	0,048	471,7931	0,153	0,068586207
Excavators	2021	251	500	Excavators_2021_500	0,170127	0,143	1,08777	1,33174	0,005	0,045	0,041	469,6156	0,152	0,068137931
Excavators	2021	501	750	Excavators_2021_750	0,196683	0,165	1,14978	1,61856	0,005	0,056	0,052	469,547	0,152	0,068137931
Excavators	2022	16	25	Excavators_2022_25	0,568779	0,478	4,27341	3,70039	0,005	0,16	0,147	525,4468	0,17	0,076206897
Excavators	2022	26	50	Excavators_2022_50	0,568779	0,478	4,27341	3,70039	0,005	0,16	0,147	525,4468	0,17	0,076206897
Excavators	2022	51	120	Excavators_2022_120	0,299503	0,252	3,47329	2,60649	0,005	0,138	0,127	467,6256	0,151	0,067689655
Excavators	2022	121	175	Excavators_2022_175	0,22749	0,191	3,074	1,6781	0,005	0,081	0,075	472,1917	0,153	0,068586207
Excavators	2022	176	250	Excavators_2022_250	0,176606	0,148	1,09157	1,38616	0,005	0,044	0,04	472,0412	0,153	0,068586207
Excavators	2022	251	500	Excavators_2022_500	0,152263	0,128	1,06126	1,03988	0,005	0,035	0,032	469,7105	0,152	0,068137931
Excavators	2022	501	750	Excavators_2022_750	0,178436	0,15	1,144	1,2865	0,005	0,047	0,043	469,2892	0,152	0,068137931
Excavators	2023	16	25	Excavators_2023_25	0,535724	0,45	4,23393	3,59356	0,005	0,139	0,128	525,4286	0,17	0,076206897
Excavators	2023	26	50	Excavators_2023_50	0,535724	0,45	4,23393	3,59356	0,005	0,139	0,128	525,4286	0,17	0,076206897
Excavators	2023	51	120	Excavators_2023_120	0,273823	0,23	3,45367	2,38066	0,005	0,116	0,107	467,1573	0,151	0,067689655
Excavators	2023	121	175	Excavators_2023_175	0,212046	0,178	3,07648	1,46245	0,005	0,072	0,066	472,277	0,153	0,068586207
Excavators	2023	176	250	Excavators_2023_250	0,168964	0,142	1,08965	1,20943	0,005	0,039	0,036	472,2131	0,153	0,068586207
Excavators	2023	251	500	Excavators_2023_500	0,145171	0,122	1,05093	0,89311	0,005	0,03	0,028	469,8892	0,152	0,068137931
Excavators	2023	501	750	Excavators_2023_750	0,171247	0,144	1,13199	1,15865	0,005	0,043	0,04	468,6826	0,152	0,068137931
Excavators	2024	16	25	Excavators_2024_25	0,495634	0,416	4,20529	3,50816	0,005	0,12	0,11	525,979	0,17	0,076206897
Excavators	2024	26	50	Excavators_2024_50	0,495634	0,416	4,20529	3,50816	0,005	0,12	0,11	525,979	0,17	0,076206897
Excavators	2024	51	120	Excavators_2024_120	0,258544	0,217	3,45322	2,24781	0,005	0,102	0,094	467,3843	0,151	0,067689655
Excavators	2024	121	175	Excavators_2024_175	0,202572	0,17	3,08336	1,32479	0,005	0,065	0,06	472,4279	0,153	0,068586207
Excavators	2024	176	250	Excavators_2024_250	0,165297	0,139	1,0899	1,10808	0,005	0,036	0,033	472,4415	0,153	0,068586207
Excavators	2024	251	500	Excavators_2024_500	0,144133	0,121	1,05369	0,83129	0,005	0,029	0,026	469,7108	0,152	0,068137931
Excavators	2024	501	750	Excavators_2024_750	0,169017	0,142	1,13421	1,10467	0,005	0,041	0,037	468,652	0,152	0,068137931
Excavators	2025	16	25	Excavators_2025_25	0,47994	0,403	4,21941	3,45298	0,005	0,107	0,099	525,7772	0,17	0,076206897
Excavators	2025	26	50	Excavators_2025_50	0,47994	0,403	4,21941	3,45298	0,005	0,107	0,099	525,7772	0,17	0,076206897
Excavators	2025	51	120	Excavators_2025_120	0,23878	0,201	3,43876	2,08246	0,005	0,085	0,078	466,7376	0,151	0,067689655
Excavators	2025	121	175	Excavators_2025_175	0,187811	0,158	3,078	1,15367	0,005	0,057	0,052	472,4964	0,153	0,068586207
Excavators	2025	176	250	Excavators_2025_250	0,155588	0,131	1,08136	0,96211	0,005	0,032	0,029	472,5599	0,153	0,068586207
Excavators	2025	251	500	Excavators_2025_500	0,137039	0,115	1,05072	0,72641	0,005	0,026	0,024	470,2915	0,152	0,068137931
Excavators	2025	501	750	Excavators_2025_750	0,165305	0,139	1,13484	1,02571	0,005	0,038	0,035	468,5582	0,152	0,068137931
Excavators	2030	16	25	Excavators_2030_25	1,838	0,685	2,339	4,332	0,007	0,161	0,161	568,299	0,061	0,027344828
Excavators	2030	26	50	Excavators_2030_50	2,458	0,602	5,309	3,393	0,007	0,038	0,038	568,299	0,054	0,024206897
Excavators	2030	51	120	Excavators_2030_120	3,618	0,301	3,806	1,676	0,006	0,034	0,034	568,299	0,027	0,012103448
Excavators	2030	121	175	Excavators_2030_175	3,914	0,213	3,362	0,525	0,006	0,023	0,023	568,299	0,019	0,008517241
Excavators	2030	176	250	Excavators_2030_250	5,258	0,203	1,145	0,452	0,006	0,016	0,016	568,299	0,018	0,008068966
Excavators	2030	251	500	Excavators_2030_500	7,722	0,202	1,088	0,433	0,005	0,016	0,016	568,299	0,018	0,008068966
Excavators	2030	501	750	Excavators_2030_750	12,807	0,202	1,088	0,437	0,005	0,016	0,016	568,299	0,018	0,008068966
Excavators	2035	16	25	Excavators_2035_25	1,838	0,685	2,339	4,332	0,007	0,161	0,161	568,299	0,061	0,027344828
Excavators	2035	26	50	Excavators_2035_50	2,333	0,572	5,287	3,323	0,007	0,024	0,024	568,299	0,051	0,022862069
Excavators	2035	51	120	Excavators_2035_120	3,411	0,284	3,802	1,551	0,006	0,021	0,021	568,299	0,025	0,011206897

Excavators	2035	121	175	Excavators_2035_175	3,622	0,197	3,363	0,365	0,006	0,015	0,015	568,299	0,017	0,00762069
Excavators	2035	176	250	Excavators_2035_250	5,059	0,195	1,145	0,342	0,006	0,013	0,013	568,3	0,017	0,00762069
Excavators	2035	251	500	Excavators_2035_500	7,45	0,195	1,089	0,337	0,005	0,013	0,013	568,299	0,017	0,00762069
Excavators	2035	501	750	Excavators_2035_750	12,348	0,195	1,088	0,338	0,005	0,013	0,013	568,299	0,017	0,00762069
Excavators	2040	16	25	Excavators_2040_25	1,838	0,685	2,339	4,332	0,007	0,161	0,161	568,3	0,061	0,027344828
Excavators	2040	26	50	Excavators_2040_50	2,314	0,567	5,283	3,29	0,007	0,019	0,019	568,299	0,051	0,022862069
Excavators	2040	51	120	Excavators_2040_120	3,36	0,279	3,802	1,507	0,006	0,017	0,017	568,299	0,025	0,011206897
Excavators	2040	121	175	Excavators_2040_175	3,532	0,193	3,363	0,311	0,006	0,013	0,013	568,299	0,017	0,00762069
Excavators	2040	176	250	Excavators_2040_250	4,971	0,192	1,145	0,3	0,006	0,011	0,011	568,299	0,017	0,00762069
Excavators	2040	251	500	Excavators_2040_500	7,322	0,192	1,089	0,3	0,005	0,011	0,011	568,299	0,017	0,00762069
Excavators	2040	501	750	Excavators_2040_750	12,137	0,192	1,089	0,3	0,005	0,011	0,011	568,299	0,017	0,00762069
Forklifts	1990	26	50	Forklifts_1990_50	11,848	4,826	9,773	7,952	0,692	1,266	1,266	568,299	0,435	0,195
Forklifts	1990	51	120	Forklifts_1990_120	12,154	2,326	5,638	14,699	0,628	1,32	1,32	568,3	0,209	0,093689655
Forklifts	1990	121	175	Forklifts_1990_175	14,423	1,537	4,938	12,932	0,602	0,849	0,849	568,299	0,138	0,061862069
Forklifts	1990	176	250	Forklifts_1990_250	19,845	1,537	4,938	12,932	0,602	0,849	0,849	568,299	0,138	0,061862069
Forklifts	1990	251	500	Forklifts_1990_500	25,356	1,365	10,853	12,267	0,525	0,73	0,73	568,299	0,123	0,055137931
Forklifts	2000	26	50	Forklifts_2000_50	10,952	4,461	9,216	7,035	0,065	0,934	0,934	568,3	0,402	0,180206897
Forklifts	2000	51	120	Forklifts_2000_120	9,146	1,75	4,459	9,75	0,059	0,882	0,882	568,299	0,157	0,07037931
Forklifts	2000	121	175	Forklifts_2000_175	11,149	1,188	3,519	9,001	0,057	0,502	0,502	568,299	0,107	0,047965517
Forklifts	2000	176	250	Forklifts_2000_250	11,958	0,926	2,534	8,546	0,057	0,372	0,372	568,299	0,083	0,037206897
Forklifts	2000	251	500	Forklifts_2000_500	15,747	0,848	3,255	8,126	0,049	0,333	0,333	568,299	0,076	0,034068966
Forklifts	2005	26	50	Forklifts_2005_50	10,087	4,108	8,778	6,62	0,065	0,891	0,891	568,299	0,37	0,165862069
Forklifts	2005	51	120	Forklifts_2005_120	8,425	1,612	4,35	8,602	0,059	0,876	0,876	568,299	0,145	0,065
Forklifts	2005	121	175	Forklifts_2005_175	9,959	1,061	3,418	7,94	0,057	0,475	0,475	568,299	0,095	0,042586207
Forklifts	2005	176	250	Forklifts_2005_250	8,606	0,666	1,693	7,367	0,057	0,253	0,253	568,299	0,06	0,026896552
Forklifts	2005	251	500	Forklifts_2005_500	10,976	0,591	1,803	6,611	0,049	0,23	0,23	568,299	0,053	0,023758621
Forklifts	2010	26	50	Forklifts_2010_50	2,846117	2,392	7,62516	6,31187	0,005	0,729	0,671	583,8704	0,17	0,076206897
Forklifts	2010	51	120	Forklifts_2010_120	1,045472	0,878	4,10764	7,63494	0,005	0,625	0,575	523,9205	0,153	0,068586207
Forklifts	2010	121	175	Forklifts_2010_175	0,764801	0,643	3,54812	7,24303	0,005	0,389	0,357	524,5625	0,153	0,068586207
Forklifts	2010	176	250	Forklifts_2010_250	0,852639	0,716	2,88991	8,49545	0,005	0,398	0,366	525,9172	0,153	0,068586207
Forklifts	2010	251	500	Forklifts_2010_500	0,814667	0,685	5,79345	8,13812	0,005	0,381	0,351	526,239	0,153	0,068586207
Forklifts	2011	26	50	Forklifts_2011_50	2,771689	2,329	7,5619	6,26642	0,005	0,715	0,657	582,4107	0,17	0,076206897
Forklifts	2011	51	120	Forklifts_2011_120	1,023636	0,86	4,10232	7,45983	0,005	0,617	0,568	522,6107	0,153	0,068586207
Forklifts	2011	121	175	Forklifts_2011_175	0,759385	0,638	3,55732	7,14122	0,005	0,385	0,355	523,2511	0,153	0,068586207
Forklifts	2011	176	250	Forklifts_2011_250	0,819463	0,689	2,77115	8,17495	0,005	0,381	0,35	524,6024	0,153	0,068586207
Forklifts	2011	251	500	Forklifts_2011_500	0,787175	0,661	5,42187	7,84	0,005	0,368	0,338	524,9234	0,153	0,068586207
Forklifts	2012	26	50	Forklifts_2012_50	2,800937	2,354	7,68036	6,27736	0,005	0,72	0,663	580,951	0,17	0,076206897
Forklifts	2012	51	120	Forklifts_2012_120	1,026513	0,863	4,13104	7,43066	0,005	0,62	0,571	521,3009	0,153	0,068586207
Forklifts	2012	121	175	Forklifts_2012_175	0,764904	0,643	3,58413	7,11981	0,005	0,387	0,356	521,9397	0,153	0,068586207
Forklifts	2012	176	250	Forklifts_2012_250	0,82428	0,693	2,77846	8,14199	0,005	0,381	0,35	523,2876	0,153	0,068586207
Forklifts	2012	251	500	Forklifts_2012_500	0,795085	0,668	5,42806	7,85628	0,005	0,369	0,34	523,6078	0,153	0,068586207
Forklifts	2013	26	50	Forklifts_2013_50	2,655997	2,232	7,4937	6,14743	0,005	0,689	0,634	578,0317	0,17	0,076206897
Forklifts	2013	51	120	Forklifts_2013_120	0,996839	0,838	4,11855	7,21545	0,005	0,603	0,555	518,6813	0,153	0,068586207
Forklifts	2013	121	175	Forklifts_2013_175	0,743778	0,625	3,57971	6,90229	0,005	0,375	0,345	519,3169	0,153	0,068586207
Forklifts	2013	176	250	Forklifts_2013_250	0,786493	0,661	2,67477	7,77338	0,005	0,36	0,332	520,658	0,153	0,068586207
Forklifts	2013	251	500	Forklifts_2013_500	0,686735	0,577	4,6871	6,91072	0,005	0,314	0,289	520,9766	0,153	0,068586207
Forklifts	2014	26	50	Forklifts_2014_50	2,515249	2,114	7,32058	6,00609	0,005	0,656	0,604	575,1123	0,17	0,076206897
Forklifts	2014	51	120	Forklifts_2014_120	0,945485	0,794	4,07936	6,84833	0,005	0,574	0,528	516,0617	0,153	0,068586207
Forklifts	2014	121	175	Forklifts_2014_175	0,688099	0,578	3,52073	6,35205	0,005	0,345	0,317	516,694	0,153	0,068586207
Forklifts	2014	176	250	Forklifts_2014_250	0,731475	0,615	2,50114	7,27612	0,005	0,33	0,304	518,0284	0,153	0,068586207
Forklifts	2014	251	500	Forklifts_2014_500	0,644228	0,541	4,25186	6,35258	0,005	0,289	0,266	518,3454	0,153	0,068586207
Forklifts	2015	26	50	Forklifts_2015_50	2,466892	2,073	7,29982	5,93143	0,005	0,643	0,591	569,2736	0,17	0,076206897
Forklifts	2015	51	120	Forklifts_2015_120	0,914509	0,768	4,06346	6,60091	0,005	0,555	0,51	510,8225	0,153	0,068586207
Forklifts	2015	121	175	Forklifts_2015_175	0,673169	0,566	3,51969	6,13482	0,005	0,335	0,308	511,4484	0,153	0,068586207
Forklifts	2015	176	250	Forklifts_2015_250	0,672054	0,565	2,32501	6,69668	0,005	0,298	0,274	512,7693	0,153	0,068586207
Forklifts	2015	251	500	Forklifts_2015_500	0,539875	0,454	3,29951	5,33227	0,005	0,237	0,218	513,083	0,153	0,068586207
Forklifts	2016	26	50	Forklifts_2016_50	2,217878	1,864	6,93473	5,66211	0,005	0,583	0,537	563,4349	0,17	0,076206897
Forklifts	2016	51	120	Forklifts_2016_120	0,860278	0,723	4,02311	6,22192	0,005	0,52	0,479	505,5833	0,153	0,068586207
Forklifts	2016	121	175	Forklifts_2016_175	0,630613	0,53	3,47253	5,67466	0,005	0,31	0,285	506,2028	0,153	0,068586207
Forklifts	2016	176	250	Forklifts_2016_250	0,641979	0,539	2,22626	6,35303	0,005	0,28	0,257	507,5101	0,153	0,068586207
Forklifts	2016	251	500	Forklifts_2016_500	0,419581	0,353	2,57209	4,04212	0,005	0,174	0,16	507,8206	0,153	0,068586207
Forklifts	2017	26	50	Forklifts_2017_50	2,026819	1,703	6,67251	5,45035	0,005	0,536	0,493	554,6769	0,17	0,076206897
Forklifts	2017	51	120	Forklifts_2017_120	0,799635	0,672	3,97881	5,81772	0,005	0,48	0,442	497,7245	0,153	0,068586207
Forklifts	2017	121	175	Forklifts_2017_175	0,604568	0,508	3,45188	5,36215	0,005	0,294	0,27	498,3344	0,153	0,068586207
Forklifts	2017	176	250	Forklifts_2017_250	0,589964	0,496	2,0923	5,75116	0,005	0,252	0,232	499,6213	0,153	0,068586207
Forklifts	2017	251	500	Forklifts_2017_500	0,401897	0,338	2,50803	3,7797	0,005	0,161	0,148	499,927	0,153	0,068586207
Forklifts	2018	26	50	Forklifts_2018_50	1,658295	1,393	6,10276	5,05181	0,005	0,447	0,411	545,9188	0,17	0,076206897
Forklifts	2018	51	120	Forklifts_2018_120	0,675301	0,567	3,85819	5,0153	0,005	0,4	0,368	489,8657	0,153	0,068586207
Forklifts	2018	121	175	Forklifts_2018_175	0,508414	0,427	3,33646	4,42984	0,005	0,241	0,222	490,4659	0,153	0,068586207
Forklifts	2018	176	250	Forklifts_2018_250	0,506009	0,425	1,83475	4,93757	0,005	0,207	0,191	491,7326	0,153	0,068586207
Forklifts	2018	251	500	Forklifts_2018_500	0,335655	0,282	1,87814	3,01864	0,005	0,125	0,115	492,0335	0,153	0,068586207
Forklifts	2019	26	50	Forklifts_2019_50	1,480074	1,244	5,88034	4,86189	0,005	0,401	0,369	537,1608	0,17	0,076206897
Forklifts	2019	51	120	Forklifts_2019_120	0,606336	0,509	3,80391	4,54965	0,005	0,352	0,324	482,0069	0,153	0,068586207

Forklifts	2019	121	175	Forklifts_2019_175	0,454984	0,382	3,28831	3,86458	0,005	0,21	0,193	482,5975	0,153	0,068586207
Forklifts	2019	176	250	Forklifts_2019_250	0,445406	0,374	1,6773	4,2498	0,005	0,175	0,161	483,8438	0,153	0,068586207
Forklifts	2019	251	500	Forklifts_2019_500	0,31829	0,267	1,814	2,75148	0,005	0,112	0,103	484,1399	0,153	0,068586207
Forklifts	2020	26	50	Forklifts_2020_50	1,337399	1,124	5,70563	4,68572	0,005	0,36	0,331	525,4833	0,17	0,076206897
Forklifts	2020	51	120	Forklifts_2020_120	0,545921	0,459	3,75954	4,13299	0,005	0,308	0,283	471,5285	0,153	0,068586207
Forklifts	2020	121	175	Forklifts_2020_175	0,402357	0,338	3,24885	3,3196	0,005	0,18	0,165	472,1062	0,153	0,068586207
Forklifts	2020	176	250	Forklifts_2020_250	0,348476	0,293	1,44178	3,24149	0,005	0,126	0,116	473,3255	0,153	0,068586207
Forklifts	2020	251	500	Forklifts_2020_500	0,299035	0,251	1,47807	2,43991	0,005	0,097	0,089	473,6151	0,153	0,068586207
Forklifts	2021	26	50	Forklifts_2021_50	1,192536	1,002	5,53477	4,5202	0,005	0,318	0,292	525,4833	0,17	0,076206897
Forklifts	2021	51	120	Forklifts_2021_120	0,490261	0,412	3,72	3,75592	0,005	0,267	0,245	471,5285	0,153	0,068586207
Forklifts	2021	121	175	Forklifts_2021_175	0,366939	0,308	3,23128	2,9207	0,005	0,158	0,145	472,1062	0,153	0,068586207
Forklifts	2021	176	250	Forklifts_2021_250	0,296154	0,249	1,33672	2,58195	0,005	0,099	0,091	473,3255	0,153	0,068586207
Forklifts	2021	251	500	Forklifts_2021_500	0,301833	0,254	1,48481	2,30266	0,005	0,094	0,086	473,6151	0,153	0,068586207
Forklifts	2022	26	50	Forklifts_2022_50	1,02259	0,859	5,30418	4,31214	0,005	0,27	0,248	525,4833	0,17	0,076206897
Forklifts	2022	51	120	Forklifts_2022_120	0,430627	0,362	3,67507	3,36021	0,005	0,223	0,205	471,5285	0,153	0,068586207
Forklifts	2022	121	175	Forklifts_2022_175	0,324265	0,272	3,19749	2,47982	0,005	0,132	0,122	472,1062	0,153	0,068586207
Forklifts	2022	176	250	Forklifts_2022_250	0,280841	0,236	1,3171	2,31941	0,005	0,09	0,083	473,3255	0,153	0,068586207
Forklifts	2022	251	500	Forklifts_2022_500	0,275829	0,232	1,21922	1,99119	0,005	0,077	0,071	473,6151	0,153	0,068586207
Forklifts	2023	26	50	Forklifts_2023_50	0,911766	0,766	5,16597	4,15219	0,005	0,232	0,213	525,4833	0,17	0,076206897
Forklifts	2023	51	120	Forklifts_2023_120	0,388709	0,327	3,64655	3,0569	0,005	0,189	0,174	471,5285	0,153	0,068586207
Forklifts	2023	121	175	Forklifts_2023_175	0,289923	0,244	3,1799	2,11214	0,005	0,111	0,102	472,1062	0,153	0,068586207
Forklifts	2023	176	250	Forklifts_2023_250	0,242474	0,204	1,23515	1,80718	0,005	0,069	0,063	473,3255	0,153	0,068586207
Forklifts	2023	251	500	Forklifts_2023_500	0,261765	0,22	1,21596	1,78772	0,005	0,069	0,063	473,6151	0,153	0,068586207
Forklifts	2024	26	50	Forklifts_2024_50	0,823848	0,692	5,0885	4,03948	0,005	0,203	0,187	525,4833	0,17	0,076206897
Forklifts	2024	51	120	Forklifts_2024_120	0,357083	0,3	3,62907	2,81432	0,005	0,163	0,15	471,5285	0,153	0,068586207
Forklifts	2024	121	175	Forklifts_2024_175	0,266701	0,224	3,17389	1,86129	0,005	0,096	0,088	472,1062	0,153	0,068586207
Forklifts	2024	176	250	Forklifts_2024_250	0,232645	0,195	1,21846	1,6253	0,005	0,061	0,056	473,3255	0,153	0,068586207
Forklifts	2024	251	500	Forklifts_2024_500	0,258844	0,218	1,21901	1,72336	0,005	0,065	0,06	473,6151	0,153	0,068586207
Forklifts	2025	26	50	Forklifts_2025_50	0,757155	0,636	5,02929	3,93206	0,005	0,178	0,164	525,4833	0,17	0,076206897
Forklifts	2025	51	120	Forklifts_2025_120	0,329382	0,277	3,61138	2,60732	0,005	0,14	0,128	471,5285	0,153	0,068586207
Forklifts	2025	121	175	Forklifts_2025_175	0,248361	0,209	3,17013	1,653	0,005	0,084	0,078	472,1062	0,153	0,068586207
Forklifts	2025	176	250	Forklifts_2025_250	0,226669	0,19	1,2143	1,46623	0,005	0,056	0,052	473,3255	0,153	0,068586207
Forklifts	2025	251	500	Forklifts_2025_500	0,255656	0,215	1,22207	1,65848	0,005	0,062	0,057	473,6151	0,153	0,068586207
Forklifts	2030	26	50	Forklifts_2030_50	1,388	0,565	5,272	3,33	0,007	0,023	0,023	568,299	0,051	0,022862069
Forklifts	2030	51	120	Forklifts_2030_120	1,48	0,283	3,799	1,555	0,006	0,021	0,021	568,299	0,025	0,011206897
Forklifts	2030	121	175	Forklifts_2030_175	1,875	0,199	3,36	0,391	0,006	0,015	0,015	568,299	0,018	0,008068966
Forklifts	2030	176	250	Forklifts_2030_250	2,524	0,195	1,144	0,341	0,006	0,012	0,012	568,299	0,017	0,00762069
Forklifts	2030	251	500	Forklifts_2030_500	3,633	0,195	1,088	0,341	0,005	0,012	0,012	568,299	0,017	0,00762069
Forklifts	2035	26	50	Forklifts_2035_50	1,371	0,558	5,234	3,268	0,007	0,017	0,017	568,299	0,05	0,022413793
Forklifts	2035	51	120	Forklifts_2035_120	1,438	0,275	3,787	1,495	0,006	0,016	0,016	568,299	0,024	0,010758621
Forklifts	2035	121	175	Forklifts_2035_175	1,775	0,189	3,35	0,299	0,006	0,012	0,012	568,3	0,017	0,00762069
Forklifts	2035	176	250	Forklifts_2035_250	2,433	0,188	1,141	0,29	0,006	0,011	0,011	568,3	0,017	0,00762069
Forklifts	2035	251	500	Forklifts_2035_500	3,502	0,188	1,085	0,29	0,005	0,011	0,011	568,299	0,017	0,00762069
Forklifts	2040	26	50	Forklifts_2040_50	1,38	0,562	5,256	3,272	0,007	0,017	0,017	568,299	0,05	0,022413793
Forklifts	2040	51	120	Forklifts_2040_120	1,444	0,276	3,794	1,491	0,006	0,016	0,016	568,299	0,024	0,010758621
Forklifts	2040	121	175	Forklifts_2040_175	1,777	0,189	3,356	0,288	0,006	0,012	0,012	568,299	0,017	0,00762069
Forklifts	2040	176	250	Forklifts_2040_250	2,445	0,189	1,143	0,288	0,006	0,011	0,011	568,299	0,017	0,00762069
Forklifts	2040	251	500	Forklifts_2040_500	3,518	0,189	1,087	0,288	0,005	0,011	0,011	568,299	0,017	0,00762069
Generator Sets	1990	6	15	Generator Sets_1990_15	4,791	1,804	4,999	10	1,018	0,974	0,974	568,299	0,162	0,07262069
Generator Sets	1990	16	25	Generator Sets_1990_25	10,151	2,213	4,999	6,919	0,83	0,74	0,74	568,299	0,199	0,089206897
Generator Sets	1990	26	50	Generator Sets_1990_50	24,936	3,13	6,681	7,325	0,846	0,928	0,928	568,299	0,282	0,126413793
Generator Sets	1990	51	120	Generator Sets_1990_120	38,362	1,891	4,97	13,19	0,768	0,985	0,985	568,299	0,17	0,076206897
Generator Sets	1990	121	175	Generator Sets_1990_175	47,754	1,292	4,395	11,864	0,736	0,653	0,653	568,3	0,116	0,052
Generator Sets	1990	176	250	Generator Sets_1990_250	71,475	1,292	4,395	11,864	0,736	0,653	0,653	568,299	0,116	0,052
Generator Sets	1990	251	500	Generator Sets_1990_500	104,891	1,196	6,53	11,613	0,642	0,596	0,596	568,299	0,107	0,047965517
Generator Sets	1990	501	750	Generator Sets_1990_750	169,323	1,196	6,53	11,612	0,658	0,596	0,596	568,299	0,107	0,047965517
Generator Sets	1990	1001	9999	Generator Sets_1990_9999	326,002	1,195	6,53	11,612	0,658	0,594	0,594	568,299	0,107	0,047965517
Generator Sets	2000	6	15	Generator Sets_2000_15	4,033	1,518	4,875	8,846	0,079	0,613	0,613	568,299	0,137	0,061413793
Generator Sets	2000	16	25	Generator Sets_2000_25	7,648	1,667	4,783	6,405	0,065	0,51	0,51	568,299	0,15	0,067241379
Generator Sets	2000	26	50	Generator Sets_2000_50	23,582	2,96	6,415	6,55	0,066	0,692	0,692	568,299	0,267	0,119689655
Generator Sets	2000	51	120	Generator Sets_2000_120	31,137	1,535	4,158	9,468	0,06	0,686	0,686	568,299	0,138	0,061862069
Generator Sets	2000	121	175	Generator Sets_2000_175	38,027	1,029	3,381	8,612	0,057	0,404	0,404	568,299	0,092	0,041241379
Generator Sets	2000	176	250	Generator Sets_2000_250	46,981	0,849	2,656	8,277	0,057	0,325	0,325	568,299	0,076	0,034068966
Generator Sets	2000	251	500	Generator Sets_2000_500	70,308	0,802	3,7	8,102	0,05	0,301	0,301	568,299	0,072	0,032275862
Generator Sets	2000	501	750	Generator Sets_2000_750	113,5	0,802	3,7	8,102	0,051	0,301	0,301	568,3	0,072	0,032275862
Generator Sets	2000	1001	9999	Generator Sets_2000_9999	251,503	0,921	4,274	8,686	0,051	0,344	0,344	568,299	0,083	0,037206897
Generator Sets	2005	6	15	Generator Sets_2005_15	3,219	1,212	4,38	7,615	0,079	0,505	0,505	568,299	0,109	0,048862069
Generator Sets	2005	16	25	Generator Sets_2005_25	5,748	1,253	3,922	6,014	0,065	0,432	0,432	568,299	0,113	0,050655172
Generator Sets	2005	26	50	Generator Sets_2005_50	20,78	2,608	5,919	6,099	0,066	0,64	0,64	568,3	0,235	0,105344828
Generator Sets	2005	51	120	Generator Sets_2005_120	26,634	1,313	3,853	7,987	0,06	0,634	0,634	568,299	0,118	0,052896552
Generator Sets	2005	121	175	Generator Sets_2005_175	31,579	0,854	3,067	7,306	0,057	0,35	0,35	568,299	0,077	0,034517241
Generator Sets	2005	176	250	Generator Sets_2005_250	33,443	0,604	1,801	6,892	0,057	0,229	0,229	568,299	0,054	0,024206897
Generator Sets	2005	251	500	Generator Sets_2005_500	47,834	0,545	2,206	6,465	0,05	0,211	0,211	568,299	0,049	0,021965517

Generator Sets	2005	501	750	Generator Sets_2005_750	79,444	0,561	2,206	6,609	0,051	0,214	0,214	568,3	0,05	0,022413793
Generator Sets	2005	1001	9999	Generator Sets_2005_9999	195,712	0,717	2,719	7,582	0,051	0,255	0,255	568,299	0,064	0,028689655
Generator Sets	2010	6	15	Generator Sets_2010_15	2,532	0,953	4,027	6,387	0,008	0,38	0,38	568,299	0,086	0,038551724
Generator Sets	2010	16	25	Generator Sets_2010_25	4,408	0,961	3,309	5,477	0,007	0,342	0,342	568,299	0,086	0,038551724
Generator Sets	2010	26	50	Generator Sets_2010_50	16,299	2,045	5,353	5,68	0,007	0,522	0,522	568,299	0,184	0,082482759
Generator Sets	2010	51	120	Generator Sets_2010_120	20,399	1,005	3,677	6,573	0,006	0,516	0,516	568,299	0,09	0,040344828
Generator Sets	2010	121	175	Generator Sets_2010_175	24,447	0,661	2,986	5,87	0,006	0,286	0,286	568,299	0,059	0,026448276
Generator Sets	2010	176	250	Generator Sets_2010_250	23,668	0,428	1,333	5,501	0,006	0,163	0,163	568,299	0,038	0,017034483
Generator Sets	2010	251	500	Generator Sets_2010_500	33,685	0,384	1,482	5,015	0,005	0,153	0,153	568,299	0,034	0,015241379
Generator Sets	2010	501	750	Generator Sets_2010_750	56,116	0,396	1,482	5,147	0,005	0,155	0,155	568,299	0,035	0,015689655
Generator Sets	2010	1001	9999	Generator Sets_2010_9999	147,466	0,54	1,93	6,544	0,005	0,193	0,193	568,299	0,048	0,021517241
Generator Sets	2011	6	15	Generator Sets_2011_15	2,413	0,908	3,952	6,134	0,008	0,358	0,358	568,299	0,081	0,036310345
Generator Sets	2011	16	25	Generator Sets_2011_25	4,22	0,92	3,179	5,36	0,007	0,325	0,325	568,299	0,083	0,037206897
Generator Sets	2011	26	50	Generator Sets_2011_50	15,152	1,901	5,2	5,585	0,007	0,495	0,495	568,3	0,171	0,076655172
Generator Sets	2011	51	120	Generator Sets_2011_120	19,003	0,937	3,64	6,226	0,006	0,493	0,493	568,299	0,084	0,037655172
Generator Sets	2011	121	175	Generator Sets_2011_175	22,889	0,619	2,974	5,544	0,006	0,274	0,274	568,299	0,055	0,024655172
Generator Sets	2011	176	250	Generator Sets_2011_250	21,62	0,391	1,249	5,125	0,006	0,147	0,147	568,299	0,035	0,015689655
Generator Sets	2011	251	500	Generator Sets_2011_500	30,74	0,35	1,36	4,654	0,005	0,138	0,138	568,299	0,031	0,013896552
Generator Sets	2011	501	750	Generator Sets_2011_750	51,271	0,362	1,36	4,784	0,005	0,14	0,14	568,299	0,032	0,014344828
Generator Sets	2011	1001	9999	Generator Sets_2011_9999	137,042	0,502	1,784	6,202	0,005	0,18	0,18	568,299	0,045	0,020172414
Generator Sets	2012	6	15	Generator Sets_2012_15	2,298	0,865	3,874	5,874	0,008	0,338	0,338	568,299	0,078	0,034965517
Generator Sets	2012	16	25	Generator Sets_2012_25	4,059	0,884	3,043	5,239	0,007	0,307	0,307	568,299	0,079	0,035413793
Generator Sets	2012	26	50	Generator Sets_2012_50	13,912	1,746	5,03	5,485	0,007	0,466	0,466	568,299	0,157	0,07037931
Generator Sets	2012	51	120	Generator Sets_2012_120	17,544	0,865	3,603	5,848	0,006	0,46	0,46	568,299	0,078	0,034965517
Generator Sets	2012	121	175	Generator Sets_2012_175	21,243	0,575	2,963	5,198	0,006	0,254	0,254	568,299	0,051	0,022862069
Generator Sets	2012	176	250	Generator Sets_2012_250	19,998	0,361	1,196	4,77	0,006	0,133	0,133	568,3	0,032	0,014344828
Generator Sets	2012	251	500	Generator Sets_2012_500	28,44	0,324	1,275	4,315	0,005	0,125	0,125	568,299	0,029	0,013
Generator Sets	2012	501	750	Generator Sets_2012_750	47,464	0,335	1,275	4,441	0,005	0,127	0,127	568,299	0,03	0,013448276
Generator Sets	2012	1001	9999	Generator Sets_2012_9999	126,39	0,463	1,639	5,849	0,005	0,166	0,166	568,3	0,041	0,01837931
Generator Sets	2013	6	15	Generator Sets_2013_15	2,187	0,823	3,796	5,616	0,008	0,318	0,318	568,299	0,074	0,033172414
Generator Sets	2013	16	25	Generator Sets_2013_25	3,907	0,851	2,907	5,117	0,007	0,289	0,289	568,299	0,076	0,034068966
Generator Sets	2013	26	50	Generator Sets_2013_50	12,634	1,585	4,854	5,263	0,007	0,428	0,428	568,299	0,143	0,064103448
Generator Sets	2013	51	120	Generator Sets_2013_120	16,078	0,792	3,567	5,478	0,006	0,424	0,424	568,299	0,071	0,031827586
Generator Sets	2013	121	175	Generator Sets_2013_175	19,587	0,53	2,953	4,873	0,006	0,233	0,233	568,299	0,047	0,021068966
Generator Sets	2013	176	250	Generator Sets_2013_250	18,602	0,336	1,16	4,428	0,006	0,122	0,122	568,299	0,03	0,013448276
Generator Sets	2013	251	500	Generator Sets_2013_500	26,484	0,302	1,211	3,989	0,005	0,114	0,114	568,299	0,027	0,012103448
Generator Sets	2013	501	750	Generator Sets_2013_750	44,22	0,312	1,211	4,113	0,005	0,116	0,116	568,299	0,028	0,012551724
Generator Sets	2013	1001	9999	Generator Sets_2013_9999	115,946	0,425	1,502	5,494	0,005	0,152	0,152	568,299	0,038	0,017034483
Generator Sets	2014	6	15	Generator Sets_2014_15	2,081	0,783	3,723	5,369	0,008	0,298	0,298	568,299	0,07	0,03137931
Generator Sets	2014	16	25	Generator Sets_2014_25	3,767	0,821	2,78	5	0,007	0,272	0,272	568,299	0,074	0,033172414
Generator Sets	2014	26	50	Generator Sets_2014_50	11,368	1,427	4,683	5,048	0,007	0,389	0,389	568,299	0,128	0,05737931
Generator Sets	2014	51	120	Generator Sets_2014_120	14,638	0,721	3,532	5,147	0,006	0,385	0,385	568,299	0,065	0,029137931
Generator Sets	2014	121	175	Generator Sets_2014_175	17,974	0,486	2,945	4,565	0,006	0,212	0,212	568,299	0,043	0,019275862
Generator Sets	2014	176	250	Generator Sets_2014_250	17,205	0,311	1,13	4,025	0,006	0,111	0,111	568,3	0,028	0,012551724
Generator Sets	2014	251	500	Generator Sets_2014_500	24,516	0,279	1,157	3,603	0,005	0,104	0,104	568,299	0,025	0,011206897
Generator Sets	2014	501	750	Generator Sets_2014_750	40,956	0,289	1,157	3,724	0,005	0,106	0,106	568,299	0,026	0,011655172
Generator Sets	2014	1001	9999	Generator Sets_2014_9999	106,127	0,389	1,377	5,15	0,005	0,138	0,138	568,299	0,035	0,015689655
Generator Sets	2015	6	15	Generator Sets_2015_15	1,984	0,747	3,658	5,141	0,008	0,28	0,28	568,299	0,067	0,030034483
Generator Sets	2015	16	25	Generator Sets_2015_25	3,639	0,793	2,666	4,89	0,007	0,256	0,256	568,299	0,071	0,031827586
Generator Sets	2015	26	50	Generator Sets_2015_50	10,213	1,281	4,538	4,858	0,007	0,353	0,353	568,299	0,115	0,051551724
Generator Sets	2015	51	120	Generator Sets_2015_120	13,208	0,651	3,499	4,769	0,006	0,347	0,347	568,299	0,058	0,026
Generator Sets	2015	121	175	Generator Sets_2015_175	16,277	0,44	2,938	4,138	0,006	0,191	0,191	568,299	0,039	0,017482759
Generator Sets	2015	176	250	Generator Sets_2015_250	15,884	0,287	1,104	3,633	0,006	0,1	0,1	568,3	0,025	0,011206897
Generator Sets	2015	251	500	Generator Sets_2015_500	22,677	0,258	1,114	3,231	0,005	0,094	0,094	568,299	0,023	0,010310345
Generator Sets	2015	501	750	Generator Sets_2015_750	37,88	0,267	1,114	3,347	0,005	0,096	0,096	568,299	0,024	0,010758621
Generator Sets	2015	1001	9999	Generator Sets_2015_9999	95,984	0,351	1,269	4,822	0,005	0,124	0,124	568,299	0,031	0,013896552
Generator Sets	2016	6	15	Generator Sets_2016_15	1,914	0,72	3,622	4,978	0,008	0,264	0,264	568,299	0,065	0,029137931
Generator Sets	2016	16	25	Generator Sets_2016_25	3,548	0,773	2,604	4,803	0,007	0,244	0,244	568,299	0,069	0,030931034
Generator Sets	2016	26	50	Generator Sets_2016_50	9,132	1,146	4,41	4,685	0,007	0,318	0,318	568,299	0,103	0,046172414
Generator Sets	2016	51	120	Generator Sets_2016_120	11,84	0,583	3,469	4,41	0,006	0,309	0,309	568,299	0,052	0,023310345
Generator Sets	2016	121	175	Generator Sets_2016_175	14,658	0,396	2,934	3,731	0,006	0,17	0,17	568,299	0,035	0,015689655
Generator Sets	2016	176	250	Generator Sets_2016_250	14,652	0,265	1,081	3,259	0,006	0,09	0,09	568,299	0,023	0,010310345
Generator Sets	2016	251	500	Generator Sets_2016_500	21,002	0,239	1,077	2,882	0,005	0,084	0,084	568,299	0,021	0,009413793
Generator Sets	2016	501	750	Generator Sets_2016_750	35,041	0,247	1,077	2,989	0,005	0,086	0,086	568,3	0,022	0,009862069
Generator Sets	2016	1001	9999	Generator Sets_2016_9999	88,441	0,324	1,204	4,542	0,005	0,113	0,113	568,299	0,029	0,013
Generator Sets	2017	6	15	Generator Sets_2017_15	1,857	0,699	3,599	4,847	0,008	0,25	0,25	568,299	0,063	0,028241379
Generator Sets	2017	16	25	Generator Sets_2017_25	3,476	0,757	2,564	4,729	0,007	0,233	0,233	568,299	0,068	0,030482759
Generator Sets	2017	26	50	Generator Sets_2017_50	8,107	1,017	4,292	4,522	0,007	0,285	0,285	568,299	0,091	0,040793103
Generator Sets	2017	51	120	Generator Sets_2017_120	10,557	0,52	3,442	4,072	0,006	0,274	0,274	568,299	0,046	0,02062069
Generator Sets	2017	121	175	Generator Sets_2017_175	13,162	0,356	2,931	3,347	0,006	0,151	0,151	568,299	0,032	0,014344828
Generator Sets	2017	176	250	Generator Sets_2017_250	13,548	0,245	1,063	2,91	0,006	0,081	0,081	568,299	0,022	0,009862069
Generator Sets	2017	251	500	Generator Sets_2017_500	19,649	0,224	1,048	2,579	0,005	0,076	0,076	568,299	0,02	0,008965517
Generator Sets	2017	501	750	Generator Sets_2017_750	32,544	0,23	1,048	2,66	0,005	0,077	0,077	568,299	0,02	0,008965517

Generator Sets	2017	1001	9999	Generator Sets_2017_9999	82,27	0,301	1,161	4,293	0,005	0,104	0,104	568,299	0,027	0,012103448
Generator Sets	2018	6	15	Generator Sets_2018_15	1,805	0,679	3,58	4,728	0,008	0,237	0,237	568,299	0,061	0,027344828
Generator Sets	2018	16	25	Generator Sets_2018_25	3,412	0,744	2,531	4,661	0,007	0,224	0,224	568,299	0,067	0,030034483
Generator Sets	2018	26	50	Generator Sets_2018_50	7,133	0,895	4,182	4,366	0,007	0,253	0,253	568,299	0,08	0,035862069
Generator Sets	2018	51	120	Generator Sets_2018_120	9,356	0,461	3,418	3,752	0,006	0,239	0,239	568,299	0,041	0,01837931
Generator Sets	2018	121	175	Generator Sets_2018_175	11,794	0,319	2,93	2,989	0,006	0,133	0,133	568,299	0,028	0,012551724
Generator Sets	2018	176	250	Generator Sets_2018_250	12,549	0,226	1,048	2,582	0,006	0,072	0,072	568,299	0,02	0,008965517
Generator Sets	2018	251	500	Generator Sets_2018_500	18,523	0,211	1,028	2,31	0,005	0,069	0,069	568,299	0,019	0,008517241
Generator Sets	2018	501	750	Generator Sets_2018_750	30,476	0,215	1,028	2,37	0,005	0,07	0,07	568,299	0,019	0,008517241
Generator Sets	2018	1001	9999	Generator Sets_2018_9999	76,62	0,28	1,128	4,058	0,005	0,095	0,095	568,299	0,025	0,011206897
Generator Sets	2019	6	15	Generator Sets_2019_15	1,758	0,662	3,562	4,617	0,008	0,224	0,224	568,299	0,059	0,026448276
Generator Sets	2019	16	25	Generator Sets_2019_25	3,356	0,731	2,501	4,596	0,007	0,214	0,214	568,299	0,066	0,029586207
Generator Sets	2019	26	50	Generator Sets_2019_50	6,208	0,779	4,076	4,215	0,007	0,222	0,222	568,299	0,07	0,03137931
Generator Sets	2019	51	120	Generator Sets_2019_120	8,233	0,405	3,396	3,446	0,006	0,206	0,206	568,299	0,036	0,016137931
Generator Sets	2019	121	175	Generator Sets_2019_175	10,727	0,29	2,929	2,669	0,006	0,118	0,118	568,299	0,026	0,011655172
Generator Sets	2019	176	250	Generator Sets_2019_250	11,695	0,211	1,036	2,285	0,006	0,064	0,064	568,299	0,019	0,008517241
Generator Sets	2019	251	500	Generator Sets_2019_500	17,492	0,199	1,015	2,056	0,005	0,062	0,062	568,299	0,018	0,008068966
Generator Sets	2019	501	750	Generator Sets_2019_750	28,675	0,202	1,015	2,104	0,005	0,062	0,062	568,299	0,018	0,008068966
Generator Sets	2019	1001	9999	Generator Sets_2019_9999	71,228	0,261	1,103	3,829	0,005	0,087	0,087	568,299	0,023	0,010310345
Generator Sets	2020	6	15	Generator Sets_2020_15	1,715	0,646	3,546	4,516	0,008	0,212	0,212	568,299	0,058	0,026
Generator Sets	2020	16	25	Generator Sets_2020_25	3,307	0,721	2,473	4,538	0,007	0,205	0,205	568,299	0,065	0,029137931
Generator Sets	2020	26	50	Generator Sets_2020_50	5,508	0,691	3,995	4,075	0,007	0,194	0,194	568,299	0,062	0,027793103
Generator Sets	2020	51	120	Generator Sets_2020_120	7,383	0,364	3,38	3,173	0,006	0,179	0,179	568,299	0,032	0,014344828
Generator Sets	2020	121	175	Generator Sets_2020_175	9,884	0,267	2,93	2,38	0,006	0,105	0,105	568,299	0,024	0,010758621
Generator Sets	2020	176	250	Generator Sets_2020_250	10,963	0,198	1,026	2,016	0,006	0,057	0,057	568,299	0,017	0,00762069
Generator Sets	2020	251	500	Generator Sets_2020_500	16,528	0,188	1,005	1,816	0,005	0,055	0,055	568,299	0,017	0,00762069
Generator Sets	2020	501	750	Generator Sets_2020_750	27,045	0,191	1,005	1,858	0,005	0,056	0,056	568,299	0,017	0,00762069
Generator Sets	2020	1001	9999	Generator Sets_2020_9999	66,08	0,242	1,082	3,608	0,005	0,079	0,079	568,3	0,021	0,009413793
Generator Sets	2021	6	15	Generator Sets_2021_15	1,683	0,634	3,531	4,441	0,008	0,201	0,201	568,299	0,057	0,025551724
Generator Sets	2021	16	25	Generator Sets_2021_25	3,268	0,712	2,446	4,497	0,007	0,196	0,196	568,299	0,064	0,028689655
Generator Sets	2021	26	50	Generator Sets_2021_50	4,884	0,613	3,905	3,916	0,007	0,165	0,165	568,299	0,055	0,024655172
Generator Sets	2021	51	120	Generator Sets_2021_120	6,62	0,326	3,361	2,888	0,006	0,153	0,153	568,299	0,029	0,013
Generator Sets	2021	121	175	Generator Sets_2021_175	8,995	0,243	2,925	2,068	0,006	0,091	0,091	568,299	0,021	0,009413793
Generator Sets	2021	176	250	Generator Sets_2021_250	10,146	0,183	1,016	1,73	0,006	0,049	0,049	568,299	0,016	0,007172414
Generator Sets	2021	251	500	Generator Sets_2021_500	15,395	0,175	0,996	1,562	0,005	0,048	0,048	568,299	0,015	0,006724138
Generator Sets	2021	501	750	Generator Sets_2021_750	25,135	0,177	0,996	1,596	0,005	0,048	0,048	568,299	0,016	0,007172414
Generator Sets	2021	1001	9999	Generator Sets_2021_9999	60,247	0,22	1,06	3,372	0,005	0,07	0,07	568,3	0,019	0,008517241
Generator Sets	2022	6	15	Generator Sets_2022_15	1,662	0,626	3,519	4,39	0,008	0,193	0,193	568,299	0,056	0,025103448
Generator Sets	2022	16	25	Generator Sets_2022_25	3,242	0,706	2,426	4,47	0,007	0,188	0,188	568,299	0,063	0,028241379
Generator Sets	2022	26	50	Generator Sets_2022_50	4,466	0,56	3,858	3,796	0,007	0,143	0,143	568,299	0,05	0,022413793
Generator Sets	2022	51	120	Generator Sets_2022_120	6,113	0,301	3,353	2,671	0,006	0,134	0,134	568,299	0,027	0,012103448
Generator Sets	2022	121	175	Generator Sets_2022_175	8,363	0,226	2,926	1,83	0,006	0,081	0,081	568,299	0,02	0,008965517
Generator Sets	2022	176	250	Generator Sets_2022_250	9,575	0,173	1,01	1,508	0,006	0,043	0,043	568,299	0,015	0,006724138
Generator Sets	2022	251	500	Generator Sets_2022_500	14,616	0,166	0,99	1,384	0,005	0,042	0,042	568,299	0,015	0,006724138
Generator Sets	2022	501	750	Generator Sets_2022_750	23,822	0,168	0,99	1,412	0,005	0,043	0,043	568,299	0,015	0,006724138
Generator Sets	2022	1001	9999	Generator Sets_2022_9999	56,346	0,206	1,045	3,202	0,005	0,063	0,063	568,299	0,018	0,008068966
Generator Sets	2023	6	15	Generator Sets_2023_15	1,643	0,618	3,508	4,345	0,008	0,186	0,186	568,299	0,055	0,024655172
Generator Sets	2023	16	25	Generator Sets_2023_25	3,219	0,701	2,407	4,447	0,007	0,182	0,182	568,299	0,063	0,028241379
Generator Sets	2023	26	50	Generator Sets_2023_50	4,102	0,514	3,819	3,685	0,007	0,124	0,124	568,299	0,046	0,02062069
Generator Sets	2023	51	120	Generator Sets_2023_120	5,671	0,279	3,347	2,477	0,006	0,117	0,117	568,299	0,025	0,011206897
Generator Sets	2023	121	175	Generator Sets_2023_175	7,812	0,211	2,927	1,635	0,006	0,071	0,071	568,299	0,019	0,008517241
Generator Sets	2023	176	250	Generator Sets_2023_250	9,077	0,164	1,006	1,328	0,006	0,038	0,038	568,299	0,014	0,006275862
Generator Sets	2023	251	500	Generator Sets_2023_500	13,922	0,158	0,986	1,228	0,005	0,037	0,037	568,299	0,014	0,006275862
Generator Sets	2023	501	750	Generator Sets_2023_750	22,664	0,16	0,986	1,253	0,005	0,037	0,037	568,299	0,014	0,006275862
Generator Sets	2023	1001	9999	Generator Sets_2023_9999	53,06	0,194	1,031	3,058	0,005	0,058	0,058	568,299	0,017	0,00762069
Generator Sets	2024	6	15	Generator Sets_2024_15	1,627	0,612	3,499	4,305	0,008	0,181	0,181	568,299	0,055	0,024655172
Generator Sets	2024	16	25	Generator Sets_2024_25	3,2	0,697	2,39	4,426	0,007	0,178	0,178	568,299	0,062	0,027793103
Generator Sets	2024	26	50	Generator Sets_2024_50	3,789	0,475	3,787	3,582	0,007	0,107	0,107	568,299	0,042	0,018827586
Generator Sets	2024	51	120	Generator Sets_2024_120	5,287	0,26	3,342	2,321	0,006	0,101	0,101	568,299	0,023	0,010310345
Generator Sets	2024	121	175	Generator Sets_2024_175	7,312	0,197	2,929	1,462	0,006	0,062	0,062	568,299	0,017	0,00762069
Generator Sets	2024	176	250	Generator Sets_2024_250	8,611	0,155	1,003	1,169	0,006	0,033	0,033	568,299	0,014	0,006275862
Generator Sets	2024	251	500	Generator Sets_2024_500	13,26	0,151	0,983	1,082	0,005	0,032	0,032	568,3	0,013	0,005827586
Generator Sets	2024	501	750	Generator Sets_2024_750	21,567	0,152	0,983	1,104	0,005	0,032	0,032	568,299	0,013	0,005827586
Generator Sets	2024	1001	9999	Generator Sets_2024_9999	50,108	0,183	1,018	2,929	0,005	0,052	0,052	568,3	0,016	0,007172414
Generator Sets	2025	6	15	Generator Sets_2025_15	1,613	0,607	3,491	4,269	0,008	0,178	0,178	568,299	0,054	0,024206897
Generator Sets	2025	16	25	Generator Sets_2025_25	3,185	0,694	2,376	4,407	0,007	0,175	0,175	568,299	0,062	0,027793103
Generator Sets	2025	26	50	Generator Sets_2025_50	3,511	0,44	3,758	3,481	0,007	0,093	0,093	568,3	0,039	0,017482759
Generator Sets	2025	51	120	Generator Sets_2025_120	4,942	0,243	3,338	2,185	0,006	0,087	0,087	568,299	0,021	0,009413793
Generator Sets	2025	121	175	Generator Sets_2025_175	6,832	0,184	2,93	1,297	0,006	0,053	0,053	568,299	0,016	0,007172414
Generator Sets	2025	176	250	Generator Sets_2025_250	8,168	0,147	1	1,02	0,006	0,028	0,028	568,299	0,013	0,005827586
Generator Sets	2025	251	500	Generator Sets_2025_500	12,627	0,144	0,981	0,945	0,005	0,027	0,027	568,3	0,013	0,005827586
Generator Sets	2025	501	750	Generator Sets_2025_750	20,518	0,145	0,981	0,964	0,005	0,027	0,027	568,299	0,013	0,005827586
Generator Sets	2025	1001	9999	Generator Sets_2025_9999	47,32	0,173	1,008	2,812	0,005	0,047	0,047	568,299	0,015	0,006724138

Generator Sets	2030	6	15	Generator Sets_2030_15	1,573	0,592	3,47	4,164	0,008	0,166	0,166	568,299	0,053	0,023758621
Generator Sets	2030	16	25	Generator Sets_2030_25	3,15	0,686	2,34	4,347	0,007	0,165	0,165	568,299	0,061	0,027344828
Generator Sets	2030	26	50	Generator Sets_2030_50	2,512	0,315	3,64	3,107	0,007	0,038	0,038	568,299	0,028	0,012551724
Generator Sets	2030	51	120	Generator Sets_2030_120	3,616	0,178	3,316	1,645	0,006	0,034	0,034	568,299	0,016	0,007172414
Generator Sets	2030	121	175	Generator Sets_2030_175	4,837	0,13	2,929	0,601	0,006	0,023	0,023	568,299	0,011	0,004931034
Generator Sets	2030	176	250	Generator Sets_2030_250	6,637	0,12	0,998	0,504	0,006	0,016	0,016	568,299	0,01	0,004482759
Generator Sets	2030	251	500	Generator Sets_2030_500	10,441	0,119	0,978	0,476	0,005	0,015	0,015	568,299	0,01	0,004482759
Generator Sets	2030	501	750	Generator Sets_2030_750	16,888	0,119	0,978	0,482	0,005	0,015	0,015	568,299	0,01	0,004482759
Generator Sets	2030	1001	9999	Generator Sets_2030_9999	35,17	0,128	0,979	2,483	0,005	0,029	0,029	568,299	0,011	0,004931034
Generator Sets	2035	6	15	Generator Sets_2035_15	1,565	0,589	3,47	4,143	0,008	0,162	0,162	568,299	0,053	0,023758621
Generator Sets	2035	16	25	Generator Sets_2035_25	3,144	0,685	2,34	4,332	0,007	0,162	0,162	568,299	0,061	0,027344828
Generator Sets	2035	26	50	Generator Sets_2035_50	2,206	0,276	3,607	2,991	0,007	0,018	0,018	568,299	0,024	0,010758621
Generator Sets	2035	51	120	Generator Sets_2035_120	3,176	0,156	3,31	1,458	0,006	0,016	0,016	568,299	0,014	0,006275862
Generator Sets	2035	121	175	Generator Sets_2035_175	4,187	0,113	2,929	0,373	0,006	0,013	0,013	568,299	0,01	0,004482759
Generator Sets	2035	176	250	Generator Sets_2035_250	6,1	0,11	0,998	0,331	0,006	0,011	0,011	568,299	0,009	0,004034483
Generator Sets	2035	251	500	Generator Sets_2035_500	9,666	0,11	0,978	0,328	0,005	0,011	0,011	568,299	0,009	0,004034483
Generator Sets	2035	501	750	Generator Sets_2035_750	15,606	0,11	0,978	0,328	0,005	0,011	0,011	568,299	0,009	0,004034483
Generator Sets	2035	1001	9999	Generator Sets_2035_9999	31,223	0,114	0,978	2,362	0,005	0,022	0,022	568,299	0,01	0,004482759
Generator Sets	2040	6	15	Generator Sets_2040_15	1,565	0,589	3,469	4,142	0,008	0,161	0,161	568,299	0,053	0,023758621
Generator Sets	2040	16	25	Generator Sets_2040_25	3,144	0,685	2,339	4,332	0,007	0,161	0,161	568,299	0,061	0,027344828
Generator Sets	2040	26	50	Generator Sets_2040_50	2,182	0,273	3,601	2,941	0,007	0,012	0,012	568,3	0,024	0,010758621
Generator Sets	2040	51	120	Generator Sets_2040_120	3,086	0,152	3,308	1,399	0,006	0,012	0,012	568,299	0,013	0,005827586
Generator Sets	2040	121	175	Generator Sets_2040_175	3,958	0,107	2,928	0,293	0,006	0,01	0,01	568,299	0,009	0,004034483
Generator Sets	2040	176	250	Generator Sets_2040_250	5,86	0,106	0,997	0,277	0,006	0,009	0,009	568,299	0,009	0,004034483
Generator Sets	2040	251	500	Generator Sets_2040_500	9,29	0,106	0,978	0,277	0,005	0,009	0,009	568,299	0,009	0,004034483
Generator Sets	2040	501	750	Generator Sets_2040_750	14,997	0,106	0,978	0,277	0,005	0,009	0,009	568,3	0,009	0,004034483
Generator Sets	2040	1001	9999	Generator Sets_2040_9999	29,36	0,107	0,978	2,33	0,005	0,02	0,02	568,299	0,009	0,004034483
Graders	1990	26	50	Graders_1990_50	10,997	4,776	9,678	7,935	0,871	1,265	1,265	568,3	0,431	0,193206897
Graders	1990	51	120	Graders_1990_120	14,614	2,332	5,658	14,78	0,791	1,325	1,325	568,299	0,21	0,094137931
Graders	1990	121	175	Graders_1990_175	17,684	1,707	5,007	13,838	0,758	0,946	0,946	568,299	0,154	0,069034483
Graders	1990	176	250	Graders_1990_250	24,561	1,707	5,007	13,838	0,758	0,946	0,946	568,299	0,154	0,069034483
Graders	1990	251	500	Graders_1990_500	29,01	1,512	10,95	13,128	0,662	0,811	0,811	568,299	0,136	0,060965517
Graders	1990	501	750	Graders_1990_750	61,406	1,512	10,95	13,128	1,018	0,826	0,826	568,3	0,136	0,060965517
Graders	2000	26	50	Graders_2000_50	10,331	4,487	9,239	7,082	0,066	0,935	0,935	568,299	0,404	0,181103448
Graders	2000	51	120	Graders_2000_120	11,628	1,855	4,675	10,486	0,06	0,904	0,904	568,3	0,167	0,074862069
Graders	2000	121	175	Graders_2000_175	13,017	1,256	3,786	9,601	0,057	0,531	0,531	568,299	0,113	0,050655172
Graders	2000	176	250	Graders_2000_250	15,266	1,061	3,039	9,264	0,057	0,437	0,437	568,299	0,095	0,042586207
Graders	2000	251	500	Graders_2000_500	18,455	0,961	4,848	8,805	0,05	0,384	0,384	568,3	0,086	0,038551724
Graders	2000	501	750	Graders_2000_750	39,064	0,961	4,848	8,805	0,052	0,384	0,384	568,299	0,086	0,038551724
Graders	2005	26	50	Graders_2005_50	9,193	3,993	8,559	6,612	0,066	0,868	0,868	568,299	0,36	0,16137931
Graders	2005	51	120	Graders_2005_120	10,174	1,623	4,406	9,021	0,06	0,849	0,849	568,3	0,146	0,065448276
Graders	2005	121	175	Graders_2005_175	11,01	1,062	3,522	8,238	0,057	0,469	0,469	568,299	0,095	0,042586207
Graders	2005	176	250	Graders_2005_250	11,283	0,784	2,17	7,837	0,057	0,314	0,314	568,299	0,07	0,03137931
Graders	2005	251	500	Graders_2005_500	13,286	0,692	2,913	7,117	0,05	0,279	0,279	568,299	0,062	0,027793103
Graders	2005	501	750	Graders_2005_750	28,569	0,703	2,909	7,284	0,052	0,282	0,282	568,299	0,063	0,028241379
Graders	2010	26	50	Graders_2010_50	3,618169	3,04	8,828	6,50487	0,005	0,852	0,783	547,2284	0,159	0,071275862
Graders	2010	51	120	Graders_2010_120	1,572744	1,322	4,95239	10,4805	0,005	0,854	0,786	523,7684	0,152	0,068137931
Graders	2010	121	175	Graders_2010_175	1,025452	0,862	3,90428	8,98998	0,005	0,496	0,456	536,7031	0,156	0,069931034
Graders	2010	176	250	Graders_2010_250	0,425787	0,358	1,43786	5,73143	0,005	0,182	0,167	530,3343	0,154	0,069034483
Graders	2010	251	500	Graders_2010_500	0,323814	0,272	1,81115	3,80781	0,005	0,142	0,13	525,6597	0,153	0,068586207
Graders	2010	501	750	Graders_2010_750	21,764	0,535	1,861	5,386	0,005	0,202	0,202	568,299	0,048	0,021517241
Graders	2011	26	50	Graders_2011_50	3,655035	3,071	8,9223	6,52829	0,005	0,86	0,791	545,8822	0,159	0,071275862
Graders	2011	51	120	Graders_2011_120	1,554125	1,306	4,9423	10,3495	0,005	0,847	0,78	522,5082	0,152	0,068137931
Graders	2011	121	175	Graders_2011_175	1,019798	0,857	3,91881	8,91245	0,005	0,494	0,455	535,2864	0,156	0,069931034
Graders	2011	176	250	Graders_2011_250	0,436805	0,367	1,44556	5,74733	0,005	0,183	0,169	529,0473	0,154	0,069034483
Graders	2011	251	500	Graders_2011_500	0,341103	0,287	1,83104	3,81827	0,005	0,144	0,132	524,3479	0,153	0,068586207
Graders	2011	501	750	Graders_2011_750	20,697	0,509	1,744	4,992	0,005	0,184	0,184	568,299	0,045	0,020172414
Graders	2012	26	50	Graders_2012_50	3,689945	3,101	9,01183	6,55055	0,005	0,867	0,798	544,5383	0,159	0,071275862
Graders	2012	51	120	Graders_2012_120	1,550155	1,303	4,94871	10,2881	0,005	0,848	0,78	521,1967	0,152	0,068137931
Graders	2012	121	175	Graders_2012_175	1,022941	0,86	3,94251	8,89699	0,005	0,496	0,456	533,878	0,156	0,069931034
Graders	2012	176	250	Graders_2012_250	0,449323	0,378	1,45898	5,777	0,005	0,185	0,171	527,8224	0,154	0,069034483
Graders	2012	251	500	Graders_2012_500	0,355329	0,299	1,82432	3,8123	0,005	0,145	0,133	522,8547	0,153	0,068586207
Graders	2012	501	750	Graders_2012_750	19,697	0,485	1,642	4,624	0,005	0,168	0,168	568,299	0,043	0,019275862
Graders	2013	26	50	Graders_2013_50	3,722893	3,128	9,0966	6,57166	0,005	0,874	0,804	541,8285	0,159	0,071275862
Graders	2013	51	120	Graders_2013_120	1,548648	1,301	4,95898	10,2424	0,005	0,849	0,781	518,5552	0,152	0,068137931
Graders	2013	121	175	Graders_2013_175	1,020021	0,857	3,95423	8,8338	0,005	0,495	0,455	530,9753	0,156	0,069931034
Graders	2013	176	250	Graders_2013_250	0,455824	0,383	1,45924	5,74577	0,005	0,185	0,17	525,0407	0,154	0,069034483
Graders	2013	251	500	Graders_2013_500	0,359627	0,302	1,7965	3,71231	0,005	0,141	0,13	520,0526	0,153	0,068586207
Graders	2013	501	750	Graders_2013_750	18,765	0,462	1,556	4,281	0,005	0,152	0,152	568,299	0,041	0,01837931
Graders	2014	26	50	Graders_2014_50	3,681797	3,094	9,06534	6,54967	0,005	0,867	0,798	539,1216	0,159	0,071275862
Graders	2014	51	120	Graders_2014_120	1,510465	1,269	4,91977	9,98567	0,005	0,832	0,765	515,3819	0,152	0,068137931
Graders	2014	121	175	Graders_2014_175	1,007876	0,847	3,95083	8,70206	0,005	0,488	0,449	527,8337	0,156	0,069931034
Graders	2014	176	250	Graders_2014_250	0,463867	0,39	1,46245	5,73998	0,005	0,185	0,171	522,3298	0,154	0,069034483

Graders	2014	251	500	Graders_2014_500	0,373775	0,314	1,79096	3,71371	0,005	0,143	0,131	517,3766	0,153	0,068586207
Graders	2014	501	750	Graders_2014_750	17,784	0,437	1,483	3,876	0,005	0,138	0,138	568,299	0,039	0,017482759
Graders	2015	26	50	Graders_2015_50	3,711306	3,119	9,14399	6,56967	0,005	0,874	0,804	533,6812	0,159	0,071275862
Graders	2015	51	120	Graders_2015_120	1,474627	1,239	4,88439	9,73775	0,005	0,813	0,748	509,597	0,152	0,068137931
Graders	2015	121	175	Graders_2015_175	1,004333	0,844	3,95849	8,63742	0,005	0,486	0,447	522,2182	0,156	0,069931034
Graders	2015	176	250	Graders_2015_250	0,471304	0,396	1,46577	5,72754	0,005	0,186	0,171	517,1275	0,154	0,069034483
Graders	2015	251	500	Graders_2015_500	0,388063	0,326	1,79107	3,72122	0,005	0,144	0,133	512,0975	0,153	0,068586207
Graders	2015	501	750	Graders_2015_750	16,846	0,414	1,42	3,501	0,005	0,124	0,124	568,299	0,037	0,016586207
Graders	2016	26	50	Graders_2016_50	3,670899	3,085	9,10623	6,51973	0,005	0,864	0,795	528,2444	0,159	0,071275862
Graders	2016	51	120	Graders_2016_120	1,419659	1,193	4,82948	9,41488	0,005	0,78	0,718	503,1614	0,152	0,068137931
Graders	2016	121	175	Graders_2016_175	0,963567	0,81	3,91624	8,24966	0,005	0,463	0,426	516,1305	0,156	0,069931034
Graders	2016	176	250	Graders_2016_250	0,473996	0,398	1,45911	5,6628	0,005	0,184	0,169	511,6959	0,154	0,069034483
Graders	2016	251	500	Graders_2016_500	0,397787	0,334	1,77374	3,6858	0,005	0,144	0,132	506,5064	0,153	0,068586207
Graders	2016	501	750	Graders_2016_750	15,959	0,393	1,367	3,154	0,005	0,112	0,112	568,299	0,035	0,015689655
Graders	2017	26	50	Graders_2017_50	3,5783	3,007	8,97826	6,423	0,005	0,843	0,776	520,0747	0,159	0,071275862
Graders	2017	51	120	Graders_2017_120	1,385767	1,164	4,81041	9,19125	0,005	0,759	0,698	495,9186	0,152	0,068137931
Graders	2017	121	175	Graders_2017_175	0,901	0,757	3,84518	7,66265	0,005	0,43	0,396	506,7478	0,155	0,069482759
Graders	2017	176	250	Graders_2017_250	0,471391	0,396	1,44905	5,52488	0,005	0,18	0,166	503,8022	0,154	0,069034483
Graders	2017	251	500	Graders_2017_500	0,397706	0,334	1,70747	3,55709	0,005	0,139	0,128	498,5996	0,153	0,068586207
Graders	2017	501	750	Graders_2017_750	15,127	0,372	1,323	2,835	0,005	0,1	0,1	568,299	0,033	0,014793103
Graders	2018	26	50	Graders_2018_50	3,342571	2,809	8,62631	6,17962	0,005	0,79	0,726	511,9098	0,159	0,071275862
Graders	2018	51	120	Graders_2018_120	1,27956	1,075	4,69711	8,51954	0,005	0,697	0,641	487,6979	0,152	0,068137931
Graders	2018	121	175	Graders_2018_175	0,78708	0,661	3,70957	6,60465	0,005	0,371	0,342	497,3767	0,155	0,069482759
Graders	2018	176	250	Graders_2018_250	0,457376	0,384	1,41595	5,27094	0,005	0,171	0,158	495,431	0,154	0,069034483
Graders	2018	251	500	Graders_2018_500	0,385909	0,324	1,56446	3,34465	0,005	0,129	0,119	490,5758	0,153	0,068586207
Graders	2018	501	750	Graders_2018_750	14,353	0,353	1,286	2,543	0,005	0,09	0,09	568,299	0,031	0,013896552
Graders	2019	26	50	Graders_2019_50	3,11378	2,616	8,27912	5,94463	0,005	0,737	0,678	503,7509	0,159	0,071275862
Graders	2019	51	120	Graders_2019_120	1,228249	1,032	4,6424	8,1592	0,005	0,665	0,612	479,9011	0,152	0,068137931
Graders	2019	121	175	Graders_2019_175	0,724541	0,609	3,65586	6,01354	0,005	0,337	0,31	489,0419	0,155	0,069482759
Graders	2019	176	250	Graders_2019_250	0,428358	0,36	1,35927	4,86575	0,005	0,156	0,144	486,3288	0,154	0,069034483
Graders	2019	251	500	Graders_2019_500	0,384059	0,323	1,52849	3,21794	0,005	0,124	0,114	482,5879	0,153	0,068586207
Graders	2019	501	750	Graders_2019_750	13,635	0,335	1,255	2,276	0,005	0,08	0,08	568,299	0,03	0,013448276
Graders	2020	26	50	Graders_2020_50	2,994737	2,516	8,13394	5,82549	0,005	0,709	0,652	492,8615	0,159	0,071275862
Graders	2020	51	120	Graders_2020_120	1,161574	0,976	4,56142	7,72513	0,005	0,622	0,572	469,3371	0,152	0,068137931
Graders	2020	121	175	Graders_2020_175	0,674427	0,567	3,62102	5,53045	0,005	0,309	0,284	478,0403	0,155	0,069482759
Graders	2020	176	250	Graders_2020_250	0,41877	0,352	1,34183	4,67787	0,005	0,15	0,138	475,3037	0,154	0,069034483
Graders	2020	251	500	Graders_2020_500	0,383198	0,322	1,5256	3,10731	0,005	0,121	0,111	471,9795	0,153	0,068586207
Graders	2020	501	750	Graders_2020_750	12,961	0,319	1,229	2,031	0,005	0,072	0,072	568,299	0,028	0,012551724
Graders	2021	26	50	Graders_2021_50	2,660206	2,235	7,62621	5,48468	0,005	0,631	0,581	492,9352	0,159	0,071275862
Graders	2021	51	120	Graders_2021_120	1,072144	0,901	4,45175	7,12535	0,005	0,57	0,524	469,0701	0,152	0,068137931
Graders	2021	121	175	Graders_2021_175	0,601372	0,505	3,55896	4,83947	0,005	0,27	0,248	478,5289	0,155	0,069482759
Graders	2021	176	250	Graders_2021_250	0,398657	0,335	1,30687	4,38134	0,005	0,139	0,128	474,5386	0,153	0,068586207
Graders	2021	251	500	Graders_2021_500	0,383194	0,322	1,46044	3,01257	0,005	0,117	0,108	471,8981	0,153	0,068586207
Graders	2021	501	750	Graders_2021_750	12,333	0,303	1,207	1,808	0,005	0,064	0,064	568,299	0,027	0,012103448
Graders	2022	26	50	Graders_2022_50	2,506375	2,106	7,42848	5,33188	0,005	0,595	0,547	493,0249	0,159	0,071275862
Graders	2022	51	120	Graders_2022_120	0,947815	0,796	4,32966	6,36004	0,005	0,493	0,453	469,6301	0,152	0,068137931
Graders	2022	121	175	Graders_2022_175	0,524016	0,44	3,49283	4,12488	0,005	0,229	0,211	478,5664	0,155	0,069482759
Graders	2022	176	250	Graders_2022_250	0,365229	0,307	1,27327	3,8881	0,005	0,124	0,114	474,239	0,153	0,068586207
Graders	2022	251	500	Graders_2022_500	0,370143	0,311	1,38967	2,80191	0,005	0,108	0,1	471,9278	0,153	0,068586207
Graders	2022	501	750	Graders_2022_750	11,747	0,289	1,187	1,606	0,005	0,057	0,057	568,299	0,026	0,011655172
Graders	2023	26	50	Graders_2023_50	2,316861	1,947	7,19094	5,14799	0,005	0,549	0,505	494,0202	0,16	0,071724138
Graders	2023	51	120	Graders_2023_120	0,855685	0,719	4,22811	5,74006	0,005	0,436	0,401	469,2859	0,152	0,068137931
Graders	2023	121	175	Graders_2023_175	0,463941	0,39	3,45006	3,54785	0,005	0,195	0,18	478,4629	0,155	0,069482759
Graders	2023	176	250	Graders_2023_250	0,337478	0,284	1,25173	3,44101	0,005	0,111	0,103	473,9256	0,153	0,068586207
Graders	2023	251	500	Graders_2023_500	0,367269	0,309	1,38481	2,70451	0,005	0,105	0,097	471,0306	0,152	0,068137931
Graders	2023	501	750	Graders_2023_750	11,215	0,276	1,17	1,425	0,005	0,051	0,051	568,3	0,024	0,010758621
Graders	2024	26	50	Graders_2024_50	2,201935	1,85	7,05059	5,0278	0,005	0,52	0,479	493,7913	0,16	0,071724138
Graders	2024	51	120	Graders_2024_120	0,812369	0,683	4,20033	5,43389	0,005	0,408	0,375	469,8208	0,152	0,068137931
Graders	2024	121	175	Graders_2024_175	0,433005	0,364	3,43239	3,20219	0,005	0,177	0,163	478,4966	0,155	0,069482759
Graders	2024	176	250	Graders_2024_250	0,312074	0,262	1,22497	3,07323	0,005	0,1	0,092	473,6685	0,153	0,068586207
Graders	2024	251	500	Graders_2024_500	0,348233	0,293	1,35613	2,43171	0,005	0,095	0,088	470,2664	0,152	0,068137931
Graders	2024	501	750	Graders_2024_750	10,734	0,264	1,155	1,265	0,005	0,046	0,046	568,3	0,023	0,010310345
Graders	2025	26	50	Graders_2025_50	2,21878	1,864	7,12535	5,04301	0,005	0,522	0,48	493,5322	0,16	0,071724138
Graders	2025	51	120	Graders_2025_120	0,759044	0,638	4,14911	5,07379	0,005	0,371	0,342	468,3155	0,151	0,067689655
Graders	2025	121	175	Graders_2025_175	0,391287	0,329	3,41759	2,77396	0,005	0,152	0,14	478,5084	0,155	0,069482759
Graders	2025	176	250	Graders_2025_250	0,273788	0,23	1,17888	2,55629	0,005	0,082	0,076	473,4704	0,153	0,068586207
Graders	2025	251	500	Graders_2025_500	0,332717	0,28	1,31461	2,26485	0,005	0,088	0,081	470,7533	0,152	0,068137931
Graders	2025	501	750	Graders_2025_750	10,301	0,253	1,141	1,125	0,005	0,041	0,041	568,3	0,022	0,009862069
Graders	2030	26	50	Graders_2030_50	1,493	0,648	5,239	3,53	0,007	0,065	0,065	568,299	0,058	0,026
Graders	2030	51	120	Graders_2030_120	2,028	0,323	3,775	1,903	0,006	0,058	0,058	568,299	0,029	0,013
Graders	2030	121	175	Graders_2030_175	2,458	0,237	3,326	0,815	0,006	0,038	0,038	568,3	0,021	0,009413793
Graders	2030	176	250	Graders_2030_250	3,114	0,216	1,148	0,684	0,006	0,024	0,024	568,299	0,019	0,008517241
Graders	2030	251	500	Graders_2030_500	4,115	0,214	1,097	0,647	0,005	0,023	0,023	568,299	0,019	0,008517241

Graders	2030	501	750	Graders_2030_750	8,717	0,214	1,097	0,654	0,005	0,023	0,023	568,299	0,019	0,008517241
Graders	2035	26	50	Graders_2035_50	1,367	0,593	5,189	3,356	0,007	0,037	0,037	568,299	0,053	0,023758621
Graders	2035	51	120	Graders_2035_120	1,837	0,293	3,767	1,661	0,006	0,034	0,034	568,299	0,026	0,011655172
Graders	2035	121	175	Graders_2035_175	2,136	0,206	3,326	0,506	0,006	0,022	0,022	568,3	0,018	0,008068966
Graders	2035	176	250	Graders_2035_250	2,822	0,196	1,137	0,452	0,006	0,016	0,016	568,299	0,017	0,00762069
Graders	2035	251	500	Graders_2035_500	3,746	0,195	1,083	0,434	0,005	0,016	0,016	568,299	0,017	0,00762069
Graders	2035	501	750	Graders_2035_750	7,933	0,195	1,083	0,438	0,005	0,016	0,016	568,299	0,017	0,00762069
Graders	2040	26	50	Graders_2040_50	1,297	0,563	5,161	3,298	0,007	0,026	0,026	568,3	0,05	0,022413793
Graders	2040	51	120	Graders_2040_120	1,747	0,278	3,764	1,56	0,006	0,024	0,024	568,299	0,025	0,011206897
Graders	2040	121	175	Graders_2040_175	2,002	0,193	3,326	0,38	0,006	0,017	0,017	568,299	0,017	0,00762069
Graders	2040	176	250	Graders_2040_250	2,719	0,188	1,133	0,36	0,006	0,013	0,013	568,299	0,017	0,00762069
Graders	2040	251	500	Graders_2040_500	3,619	0,188	1,079	0,351	0,005	0,013	0,013	568,299	0,017	0,00762069
Graders	2040	501	750	Graders_2040_750	7,663	0,188	1,079	0,353	0,005	0,013	0,013	568,299	0,017	0,00762069
Off-Highway Tractors	1990	51	120	Off-Highway Tractors_1990_120	7,901	2,432	5,842	15,285	0,791	1,384	1,384	568,299	0,219	0,098172414
Off-Highway Tractors	1990	121	175	Off-Highway Tractors_1990_175	8,363	1,85	5,217	14,647	0,758	1,033	1,033	568,299	0,166	0,074413793
Off-Highway Tractors	1990	176	250	Off-Highway Tractors_1990_250	8,363	1,85	5,217	14,647	0,758	1,033	1,033	568,299	0,166	0,074413793
Off-Highway Tractors	1990	501	750	Off-Highway Tractors_1990_750	32,077	1,629	11,847	13,849	1,018	0,896	0,896	568,3	0,147	0,065896552
Off-Highway Tractors	1990	751	1000	Off-Highway Tractors_1990_1000	45,779	1,622	11,847	13,849	1,018	0,888	0,888	568,3	0,146	0,065448276
Off-Highway Tractors	2000	51	120	Off-Highway Tractors_2000_120	6,648	2,047	5,046	11,606	0,06	0,972	0,972	568,299	0,184	0,082482759
Off-Highway Tractors	2000	121	175	Off-Highway Tractors_2000_175	6,386	1,413	4,213	10,675	0,057	0,602	0,602	568,299	0,127	0,056931034
Off-Highway Tractors	2000	176	250	Off-Highway Tractors_2000_250	5,736	1,269	3,665	10,426	0,057	0,532	0,532	568,299	0,114	0,051103448
Off-Highway Tractors	2000	501	750	Off-Highway Tractors_2000_750	22,339	1,134	6,836	9,864	0,052	0,461	0,461	568,299	0,102	0,045724138
Off-Highway Tractors	2000	751	1000	Off-Highway Tractors_2000_1000	33,036	1,17	7,259	10,29	0,052	0,444	0,444	568,299	0,105	0,047068966
Off-Highway Tractors	2005	51	120	Off-Highway Tractors_2005_120	6,042	1,86	4,801	10,379	0,06	0,932	0,932	568,299	0,167	0,074862069
Off-Highway Tractors	2005	121	175	Off-Highway Tractors_2005_175	5,63	1,246	3,943	9,479	0,057	0,547	0,547	568,299	0,112	0,050206897
Off-Highway Tractors	2005	176	250	Off-Highway Tractors_2005_250	4,641	1,027	2,923	9,16	0,057	0,425	0,425	568,299	0,092	0,041241379
Off-Highway Tractors	2005	501	750	Off-Highway Tractors_2005_750	17,978	0,913	4,992	8,543	0,052	0,372	0,372	568,299	0,082	0,036758621
Off-Highway Tractors	2005	751	1000	Off-Highway Tractors_2005_1000	27,525	0,975	5,369	9,293	0,052	0,359	0,359	568,299	0,088	0,039448276
Off-Highway Tractors	2010	51	120	Off-Highway Tractors_2010_120	1,004164	0,844	4,06859	7,39576	0,005	0,61	0,561	529,8898	0,154	0,069034483
Off-Highway Tractors	2010	121	175	Off-Highway Tractors_2010_175	0,623556	0,524	3,25207	6,19445	0,005	0,322	0,297	526,0485	0,153	0,068586207
Off-Highway Tractors	2010	176	250	Off-Highway Tractors_2010_250	0,540439	0,454	1,80076	6,56823	0,005	0,241	0,222	522,8212	0,152	0,068137931
Off-Highway Tractors	2010	501	750	Off-Highway Tractors_2010_750	0,353776	0,297	1,65183	4,74911	0,005	0,163	0,15	526,6401	0,153	0,068586207
Off-Highway Tractors	2010	751	1000	Off-Highway Tractors_2010_1000	1,235451	1,038	13,844	12,2723	0,005	0,624	0,574	524,505	0,153	0,068586207
Off-Highway Tractors	2011	51	120	Off-Highway Tractors_2011_120	0,958318	0,805	4,04749	7,12201	0,005	0,588	0,541	528,6123	0,154	0,069034483
Off-Highway Tractors	2011	121	175	Off-Highway Tractors_2011_175	0,588696	0,495	3,25718	5,88095	0,005	0,307	0,282	524,5528	0,153	0,068586207
Off-Highway Tractors	2011	176	250	Off-Highway Tractors_2011_250	0,522937	0,439	1,73271	6,3706	0,005	0,23	0,212	521,5328	0,152	0,068137931
Off-Highway Tractors	2011	501	750	Off-Highway Tractors_2011_750	0,366196	0,308	1,66137	4,77936	0,005	0,166	0,153	525,3172	0,153	0,068586207
Off-Highway Tractors	2011	751	1000	Off-Highway Tractors_2011_1000	1,235451	1,038	13,844	12,2723	0,005	0,624	0,574	523,1938	0,153	0,068586207
Off-Highway Tractors	2012	51	120	Off-Highway Tractors_2012_120	0,956826	0,804	4,07302	7,07175	0,005	0,588	0,541	527,1281	0,154	0,069034483
Off-Highway Tractors	2012	121	175	Off-Highway Tractors_2012_175	0,573556	0,482	3,27598	5,70904	0,005	0,299	0,276	523,1986	0,153	0,068586207
Off-Highway Tractors	2012	176	250	Off-Highway Tractors_2012_250	0,51645	0,434	1,70131	6,26836	0,005	0,225	0,207	520,2636	0,152	0,068137931
Off-Highway Tractors	2012	501	750	Off-Highway Tractors_2012_750	0,3785	0,318	1,67078	4,80904	0,005	0,169	0,155	523,9941	0,153	0,068586207
Off-Highway Tractors	2012	751	1000	Off-Highway Tractors_2012_1000	1,235451	1,038	13,844	12,2723	0,005	0,624	0,574	521,8825	0,153	0,068586207
Off-Highway Tractors	2013	51	120	Off-Highway Tractors_2013_120	0,915141	0,769	4,04714	6,79599	0,005	0,564	0,519	524,1555	0,154	0,069034483
Off-Highway Tractors	2013	121	175	Off-Highway Tractors_2013_175	0,54434	0,457	3,28016	5,42114	0,005	0,281	0,258	520,6151	0,153	0,068586207
Off-Highway Tractors	2013	176	250	Off-Highway Tractors_2013_250	0,508791	0,428	1,67153	6,11434	0,005	0,219	0,201	517,5627	0,152	0,068137931
Off-Highway Tractors	2013	501	750	Off-Highway Tractors_2013_750	0,342496	0,288	1,42496	4,32547	0,005	0,149	0,137	519,6246	0,153	0,068586207
Off-Highway Tractors	2013	751	1000	Off-Highway Tractors_2013_1000	1,235451	1,038	13,844	12,2723	0,005	0,624	0,574	519,26	0,153	0,068586207
Off-Highway Tractors	2014	51	120	Off-Highway Tractors_2014_120	0,830806	0,698	3,97241	6,28073	0,005	0,513	0,472	520,8244	0,154	0,069034483
Off-Highway Tractors	2014	121	175	Off-Highway Tractors_2014_175	0,504784	0,424	3,26511	5,02525	0,005	0,258	0,237	518,1639	0,153	0,068586207
Off-Highway Tractors	2014	176	250	Off-Highway Tractors_2014_250	0,481559	0,405	1,62822	5,66092	0,005	0,203	0,187	514,3699	0,152	0,068137931
Off-Highway Tractors	2014	501	750	Off-Highway Tractors_2014_750	0,317193	0,267	1,33448	4,00651	0,005	0,133	0,122	516,904	0,153	0,068586207
Off-Highway Tractors	2014	751	1000	Off-Highway Tractors_2014_1000	0,100665	0,085	0,94694	2,27938	0,005	0,054	0,05	516,6375	0,153	0,068586207
Off-Highway Tractors	2015	51	120	Off-Highway Tractors_2015_120	0,802587	0,674	3,96474	6,06726	0,005	0,494	0,455	515,3203	0,154	0,069034483
Off-Highway Tractors	2015	121	175	Off-Highway Tractors_2015_175	0,478075	0,402	3,26419	4,72365	0,005	0,239	0,22	512,6079	0,153	0,068586207
Off-Highway Tractors	2015	176	250	Off-Highway Tractors_2015_250	0,476529	0,4	1,60534	5,52773	0,005	0,199	0,183	509,1896	0,152	0,068137931
Off-Highway Tractors	2015	501	750	Off-Highway Tractors_2015_750	0,312134	0,262	1,17195	3,87437	0,005	0,126	0,116	511,0814	0,153	0,068586207
Off-Highway Tractors	2015	751	1000	Off-Highway Tractors_2015_1000	0,114305	0,096	0,96003	2,29983	0,005	0,056	0,051	511,3924	0,153	0,068586207
Off-Highway Tractors	2016	51	120	Off-Highway Tractors_2016_120	0,743357	0,625	3,92464	5,6465	0,005	0,454	0,418	509,4472	0,154	0,069034483
Off-Highway Tractors	2016	121	175	Off-Highway Tractors_2016_175	0,465284	0,391	3,27806	4,51093	0,005	0,229	0,211	507,6294	0,153	0,068586207
Off-Highway Tractors	2016	176	250	Off-Highway Tractors_2016_250	0,426838	0,359	1,47177	4,92994	0,005	0,171	0,157	504,1229	0,152	0,068137931
Off-Highway Tractors	2016	501	750	Off-Highway Tractors_2016_750	0,299821	0,252	1,14348	3,57265	0,005	0,117	0,108	505,762	0,153	0,068586207
Off-Highway Tractors	2016	751	1000	Off-Highway Tractors_2016_1000	0,127675	0,107	0,97285	2,31987	0,005	0,057	0,053	506,1474	0,153	0,068586207
Off-Highway Tractors	2017	51	120	Off-Highway Tractors_2017_120	0,697857	0,586	3,90108	5,31726	0,005	0,423	0,389	501,2453	0,154	0,069034483
Off-Highway Tractors	2017	121	175	Off-Highway Tractors_2017_175	0,423504	0,356	3,2589	4,02594	0,005	0,205	0,189	499,2446	0,153	0,068586207
Off-Highway Tractors	2017	176	250	Off-Highway Tractors_2017_250	0,389773	0,328	1,403	4,38216	0,005	0,151	0,139	496,4983	0,152	0,068137931
Off-Highway Tractors	2017	501	750	Off-Highway Tractors_2017_750	0,294592	0,248	1,14456	3,32351	0,005	0,112	0,103	497,6181	0,152	0,068137931
Off-Highway Tractors	2017	751	1000	Off-Highway Tractors_2017_1000	0,140776	0,118	0,98542	2,33951	0,005	0,059	0,054	498,2798	0,153	0,068586207
Off-Highway Tractors	2018	51	120	Off-Highway Tractors_2018_120	0,621057	0,522	3,83227	4,78732	0,005	0,373	0,343	492,8709	0,153	0,068586207
Off-Highway Tractors	2018	121	175	Off-Highway Tractors_2018_175	0,374746	0,315	3,2191	3,49764	0,005	0,176	0,162	491,3128	0,153	0,068586207
Off-Highway Tractors	2018	176	250	Off-Highway Tractors_2018_250	0,323278	0,272	1,29494	3,45421	0,005	0,119	0,109	488,6765	0,152	0,068137931
Off-Highway Tractors	2018	501	750	Off-Highway Tractors_2018_750	0,232675	0,196	1,11871	2,1656	0,005	0,081	0,074	490,1818	0,153	0,068586207
Off-Highway Tractors	2018	751	1000	Off-Highway Tractors_2018_1000	0,153606	0,129	0,99773	2,35874	0,005	0,06	0,055	490,4122	0,153	0,068586207

Off-Highway Tractors	2019	51	120	Off-Highway Tractors_2019_120	0,562974	0,473	3,79465	4,42145	0,005	0,331	0,305	484,2693	0,153	0,068586207
Off-Highway Tractors	2019	121	175	Off-Highway Tractors_2019_175	0,350048	0,294	3,21895	3,20755	0,005	0,159	0,146	483,4306	0,153	0,068586207
Off-Highway Tractors	2019	176	250	Off-Highway Tractors_2019_250	0,283777	0,238	1,21832	2,9142	0,005	0,098	0,09	481,2751	0,152	0,068137931
Off-Highway Tractors	2019	501	750	Off-Highway Tractors_2019_750	0,244248	0,205	1,12934	2,17682	0,005	0,082	0,075	482,3091	0,153	0,068586207
Off-Highway Tractors	2019	751	1000	Off-Highway Tractors_2019_1000	0,166166	0,14	1,00978	2,37757	0,005	0,062	0,057	482,5446	0,153	0,068586207
Off-Highway Tractors	2020	51	120	Off-Highway Tractors_2020_120	0,533073	0,448	3,78798	4,18317	0,005	0,307	0,282	474,1481	0,153	0,068586207
Off-Highway Tractors	2020	121	175	Off-Highway Tractors_2020_175	0,322507	0,271	3,21511	2,89032	0,005	0,14	0,129	472,9169	0,153	0,068586207
Off-Highway Tractors	2020	176	250	Off-Highway Tractors_2020_250	0,263453	0,221	1,1813	2,57547	0,005	0,086	0,079	470,943	0,152	0,068137931
Off-Highway Tractors	2020	501	750	Off-Highway Tractors_2020_750	0,239679	0,201	1,13143	2,04663	0,005	0,076	0,07	471,8151	0,153	0,068586207
Off-Highway Tractors	2020	751	1000	Off-Highway Tractors_2020_1000	0,178457	0,15	1,02156	2,39599	0,005	0,063	0,058	472,0545	0,153	0,068586207
Off-Highway Tractors	2021	51	120	Off-Highway Tractors_2021_120	0,469894	0,395	3,74258	3,77306	0,005	0,261	0,24	474,5155	0,153	0,068586207
Off-Highway Tractors	2021	121	175	Off-Highway Tractors_2021_175	0,307902	0,259	3,21953	2,65962	0,005	0,129	0,118	472,9236	0,153	0,068586207
Off-Highway Tractors	2021	176	250	Off-Highway Tractors_2021_250	0,237665	0,2	1,16179	2,11341	0,005	0,072	0,067	471,0028	0,152	0,068137931
Off-Highway Tractors	2021	501	750	Off-Highway Tractors_2021_750	0,215694	0,181	1,12237	1,71505	0,005	0,063	0,058	471,8056	0,153	0,068586207
Off-Highway Tractors	2021	751	1000	Off-Highway Tractors_2021_1000	0,190478	0,16	1,0331	2,41401	0,005	0,064	0,059	472,0545	0,153	0,068586207
Off-Highway Tractors	2022	51	120	Off-Highway Tractors_2022_120	0,414344	0,348	3,70994	3,39986	0,005	0,219	0,202	475,2338	0,154	0,069034483
Off-Highway Tractors	2022	121	175	Off-Highway Tractors_2022_175	0,275155	0,231	3,18586	2,23877	0,005	0,107	0,099	472,8111	0,153	0,068586207
Off-Highway Tractors	2022	176	250	Off-Highway Tractors_2022_250	0,213642	0,18	1,14284	1,73242	0,005	0,06	0,055	471,1313	0,152	0,068137931
Off-Highway Tractors	2022	501	750	Off-Highway Tractors_2022_750	0,20345	0,171	1,12111	1,43309	0,005	0,055	0,05	471,939	0,153	0,068586207
Off-Highway Tractors	2022	751	1000	Off-Highway Tractors_2022_1000	0,202228	0,17	1,04437	2,43162	0,005	0,066	0,06	472,0545	0,153	0,068586207
Off-Highway Tractors	2023	51	120	Off-Highway Tractors_2023_120	0,37642	0,316	3,68654	3,09527	0,005	0,187	0,172	476,0871	0,154	0,069034483
Off-Highway Tractors	2023	121	175	Off-Highway Tractors_2023_175	0,239199	0,201	3,14329	1,78476	0,005	0,085	0,079	472,9962	0,153	0,068586207
Off-Highway Tractors	2023	176	250	Off-Highway Tractors_2023_250	0,20356	0,171	1,13796	1,49148	0,005	0,053	0,049	470,845	0,152	0,068137931
Off-Highway Tractors	2023	501	750	Off-Highway Tractors_2023_750	0,199838	0,168	1,12418	1,28868	0,005	0,051	0,047	471,9321	0,153	0,068586207
Off-Highway Tractors	2023	751	1000	Off-Highway Tractors_2023_1000	0,213709	0,18	1,05538	2,44883	0,005	0,067	0,062	472,0545	0,153	0,068586207
Off-Highway Tractors	2024	51	120	Off-Highway Tractors_2024_120	0,359218	0,302	3,69095	2,94932	0,005	0,171	0,157	476,3711	0,154	0,069034483
Off-Highway Tractors	2024	121	175	Off-Highway Tractors_2024_175	0,21727	0,183	3,1328	1,49579	0,005	0,071	0,066	473,097	0,153	0,068586207
Off-Highway Tractors	2024	176	250	Off-Highway Tractors_2024_250	0,200963	0,169	1,13461	1,37732	0,005	0,049	0,045	470,6894	0,152	0,068137931
Off-Highway Tractors	2024	501	750	Off-Highway Tractors_2024_750	0,200706	0,169	1,13006	1,23477	0,005	0,048	0,044	471,9247	0,153	0,068586207
Off-Highway Tractors	2024	751	1000	Off-Highway Tractors_2024_1000	0,22492	0,189	1,06613	2,46563	0,005	0,068	0,063	472,0545	0,153	0,068586207
Off-Highway Tractors	2025	51	120	Off-Highway Tractors_2025_120	0,32831	0,276	3,66914	2,70745	0,005	0,144	0,132	476,9211	0,154	0,069034483
Off-Highway Tractors	2025	121	175	Off-Highway Tractors_2025_175	0,208537	0,175	3,14246	1,34858	0,005	0,065	0,059	473,3021	0,153	0,068586207
Off-Highway Tractors	2025	176	250	Off-Highway Tractors_2025_250	0,183862	0,154	1,13017	1,11624	0,005	0,04	0,037	470,861	0,152	0,068137931
Off-Highway Tractors	2025	501	750	Off-Highway Tractors_2025_750	0,199094	0,167	1,13452	1,11804	0,005	0,045	0,041	471,9169	0,153	0,068586207
Off-Highway Tractors	2025	751	1000	Off-Highway Tractors_2025_1000	0,235862	0,198	1,07663	2,48203	0,005	0,069	0,064	472,0545	0,153	0,068586207
Off-Highway Tractors	2030	51	120	Off-Highway Tractors_2030_120	1,683	0,518	3,944	2,959	0,006	0,175	0,175	568,299	0,046	0,02062069
Off-Highway Tractors	2030	121	175	Off-Highway Tractors_2030_175	1,689	0,373	3,435	1,916	0,006	0,104	0,104	568,299	0,033	0,014793103
Off-Highway Tractors	2030	176	250	Off-Highway Tractors_2030_250	1,423	0,315	1,286	1,715	0,006	0,064	0,064	568,299	0,028	0,012551724
Off-Highway Tractors	2030	501	750	Off-Highway Tractors_2030_750	5,992	0,304	1,351	1,59	0,005	0,06	0,06	568,299	0,027	0,012103448
Off-Highway Tractors	2030	751	1000	Off-Highway Tractors_2030_1000	8,981	0,318	1,409	3,569	0,005	0,078	0,078	568,3	0,028	0,012551724
Off-Highway Tractors	2035	51	120	Off-Highway Tractors_2035_120	1,359	0,418	3,902	2,35	0,006	0,107	0,107	568,299	0,037	0,016586207
Off-Highway Tractors	2035	121	175	Off-Highway Tractors_2035_175	1,361	0,301	3,421	1,252	0,006	0,065	0,065	568,299	0,027	0,012103448
Off-Highway Tractors	2035	176	250	Off-Highway Tractors_2035_250	1,211	0,268	1,232	1,115	0,006	0,042	0,042	568,299	0,024	0,010758621
Off-Highway Tractors	2035	501	750	Off-Highway Tractors_2035_750	5,163	0,262	1,238	1,045	0,005	0,04	0,04	568,299	0,023	0,010310345
Off-Highway Tractors	2035	751	1000	Off-Highway Tractors_2035_1000	7,617	0,269	1,268	3,116	0,005	0,056	0,056	568,299	0,024	0,010758621
Off-Highway Tractors	2040	51	120	Off-Highway Tractors_2040_120	1,176	0,362	3,878	1,976	0,006	0,067	0,067	568,299	0,032	0,014344828
Off-Highway Tractors	2040	121	175	Off-Highway Tractors_2040_175	1,162	0,257	3,412	0,836	0,006	0,041	0,041	568,299	0,023	0,010310345
Off-Highway Tractors	2040	176	250	Off-Highway Tractors_2040_250	1,073	0,237	1,198	0,747	0,006	0,028	0,028	568,299	0,021	0,009413793
Off-Highway Tractors	2040	501	750	Off-Highway Tractors_2040_750	4,612	0,234	1,164	0,71	0,005	0,027	0,027	568,299	0,021	0,009413793
Off-Highway Tractors	2040	751	1000	Off-Highway Tractors_2040_1000	6,743	0,238	1,183	2,844	0,005	0,042	0,042	568,299	0,021	0,009413793
Off-Highway Trucks	1990	121	175	Off-Highway Trucks_1990_175	6,457	2,005	5,36	15,394	0,758	1,133	1,133	568,299	0,18	0,080689655
Off-Highway Trucks	1990	176	250	Off-Highway Trucks_1990_250	8,597	2,005	5,36	15,394	0,758	1,133	1,133	568,299	0,18	0,080689655
Off-Highway Trucks	1990	251	500	Off-Highway Trucks_1990_500	12,319	1,757	12,538	14,499	0,662	0,959	0,959	568,299	0,158	0,070827586
Off-Highway Trucks	1990	501	750	Off-Highway Trucks_1990_750	19,982	1,757	12,538	14,499	1,018	0,976	0,976	568,299	0,158	0,070827586
Off-Highway Trucks	1990	751	1000	Off-Highway Trucks_1990_1000	28,084	1,746	12,538	14,499	1,018	0,963	0,963	568,3	0,157	0,07037931
Off-Highway Trucks	2000	121	175	Off-Highway Trucks_2000_175	4,115	1,278	3,772	9,57	0,057	0,548	0,548	568,299	0,115	0,051551724
Off-Highway Trucks	2000	176	250	Off-Highway Trucks_2000_250	4,454	1,039	2,896	9,178	0,057	0,425	0,425	568,299	0,093	0,041689655
Off-Highway Trucks	2000	251	500	Off-Highway Trucks_2000_500	6,594	0,94	4,214	8,675	0,05	0,376	0,376	568,299	0,084	0,037655172
Off-Highway Trucks	2000	501	750	Off-Highway Trucks_2000_750	10,696	0,94	4,214	8,675	0,052	0,376	0,376	568,299	0,084	0,037655172
Off-Highway Trucks	2000	751	1000	Off-Highway Trucks_2000_1000	16,13	1,003	4,878	9,339	0,052	0,355	0,355	568,3	0,09	0,040344828
Off-Highway Trucks	2005	121	175	Off-Highway Trucks_2005_175	3,462	1,075	3,531	8,1	0,057	0,481	0,481	568,299	0,097	0,043482759
Off-Highway Trucks	2005	176	250	Off-Highway Trucks_2005_250	3,21	0,748	1,978	7,652	0,057	0,291	0,291	568,299	0,067	0,030034483
Off-Highway Trucks	2005	251	500	Off-Highway Trucks_2005_500	4,695	0,669	2,332	6,848	0,05	0,26	0,26	568,299	0,06	0,026896552
Off-Highway Trucks	2005	501	750	Off-Highway Trucks_2005_750	7,697	0,677	2,33	7,052	0,052	0,264	0,264	568,299	0,061	0,027344828
Off-Highway Trucks	2005	751	1000	Off-Highway Trucks_2005_1000	12,436	0,773	2,812	8,177	0,052	0,266	0,266	568,299	0,069	0,030931034
Off-Highway Trucks	2010	121	175	Off-Highway Trucks_2010_175	0,758703	0,638	3,51002	6,59182	0,005	0,39	0,359	522,6455	0,152	0,068137931
Off-Highway Trucks	2010	176	250	Off-Highway Trucks_2010_250	0,657432	0,552	2,13151	6,86617	0,005	0,29	0,267	521,8781	0,152	0,068137931
Off-Highway Trucks	2010	251	500	Off-Highway Trucks_2010_500	0,5118	0,43	2,32222	5,52051	0,005	0,213	0,196	528,8078	0,154	0,069034483
Off-Highway Trucks	2010	501	750	Off-Highway Trucks_2010_750	0,633984	0,533	3,68555	6,54487	0,005	0,276	0,254	530,4366	0,154	0,069034483
Off-Highway Trucks	2010	751	1000	Off-Highway Trucks_2010_1000	0,549873	0,462	2,05613	7,15365	0,005	0,211	0,194	526,5915	0,153	0,068586207
Off-Highway Trucks	2011	121	175	Off-Highway Trucks_2011_175	0,704506	0,592	3,48667	6,13879	0,005	0,357	0,328	521,3222	0,152	0,068137931
Off-Highway Trucks	2011	176	250	Off-Highway Trucks_2011_250	0,640546	0,538	2,08881	6,53722	0,005	0,278	0,256	520,1539	0,152	0,068137931
Off-Highway Trucks	2011	251	500	Off-Highway Trucks_2011_500	0,515485	0,433	2,27798	5,39802	0,005	0,21	0,193	527,2602	0,154	0,069034483

Off-Highway Trucks	2011	501	750	Off-Highway Trucks_2011_750	0,643792	0,541	3,68121	6,51376	0,005	0,276	0,254	529,0143	0,154	0,069034483
Off-Highway Trucks	2011	751	1000	Off-Highway Trucks_2011_1000	0,55014	0,462	2,03783	7,09609	0,005	0,211	0,194	524,7459	0,153	0,068586207
Off-Highway Trucks	2012	121	175	Off-Highway Trucks_2012_175	0,704248	0,592	3,51164	6,0668	0,005	0,354	0,325	519,901	0,152	0,068137931
Off-Highway Trucks	2012	176	250	Off-Highway Trucks_2012_250	0,646155	0,543	2,1013	6,43814	0,005	0,277	0,255	518,7133	0,152	0,068137931
Off-Highway Trucks	2012	251	500	Off-Highway Trucks_2012_500	0,525914	0,442	2,29017	5,37678	0,005	0,21	0,193	525,9398	0,154	0,069034483
Off-Highway Trucks	2012	501	750	Off-Highway Trucks_2012_750	0,661317	0,556	3,73128	6,55684	0,005	0,28	0,258	527,6141	0,154	0,069034483
Off-Highway Trucks	2012	751	1000	Off-Highway Trucks_2012_1000	0,55909	0,47	2,05327	7,10377	0,005	0,213	0,196	523,3305	0,153	0,068586207
Off-Highway Trucks	2013	121	175	Off-Highway Trucks_2013_175	0,671819	0,565	3,51059	5,78297	0,005	0,33	0,304	517,0124	0,152	0,068137931
Off-Highway Trucks	2013	176	250	Off-Highway Trucks_2013_250	0,623589	0,524	2,04802	6,05816	0,005	0,263	0,242	515,8273	0,152	0,068137931
Off-Highway Trucks	2013	251	500	Off-Highway Trucks_2013_500	0,502477	0,422	2,17762	5,06239	0,005	0,197	0,181	523,5459	0,154	0,069034483
Off-Highway Trucks	2013	501	750	Off-Highway Trucks_2013_750	0,645495	0,542	3,55888	6,30864	0,005	0,268	0,247	525,1075	0,154	0,069034483
Off-Highway Trucks	2013	751	1000	Off-Highway Trucks_2013_1000	0,543085	0,456	1,9094	6,89277	0,005	0,205	0,189	520,5876	0,153	0,068586207
Off-Highway Trucks	2014	121	175	Off-Highway Trucks_2014_175	0,610195	0,513	3,47308	5,21922	0,005	0,292	0,269	514,0574	0,152	0,068137931
Off-Highway Trucks	2014	176	250	Off-Highway Trucks_2014_250	0,574728	0,483	1,93163	5,4411	0,005	0,235	0,217	512,8333	0,152	0,068137931
Off-Highway Trucks	2014	251	500	Off-Highway Trucks_2014_500	0,468214	0,393	2,07518	4,68575	0,005	0,18	0,165	521,0573	0,154	0,069034483
Off-Highway Trucks	2014	501	750	Off-Highway Trucks_2014_750	0,576983	0,485	2,95299	5,57816	0,005	0,231	0,212	521,2295	0,154	0,069034483
Off-Highway Trucks	2014	751	1000	Off-Highway Trucks_2014_1000	0,493307	0,415	1,77934	6,36534	0,005	0,187	0,172	516,9385	0,153	0,068586207
Off-Highway Trucks	2015	121	175	Off-Highway Trucks_2015_175	0,604782	0,508	3,48853	5,10449	0,005	0,284	0,262	508,7011	0,152	0,068137931
Off-Highway Trucks	2015	176	250	Off-Highway Trucks_2015_250	0,563373	0,473	1,89994	5,24228	0,005	0,227	0,209	507,8087	0,152	0,068137931
Off-Highway Trucks	2015	251	500	Off-Highway Trucks_2015_500	0,457555	0,384	2,0367	4,52794	0,005	0,173	0,159	515,8419	0,154	0,069034483
Off-Highway Trucks	2015	501	750	Off-Highway Trucks_2015_750	0,537539	0,452	2,61969	5,12427	0,005	0,208	0,192	514,6436	0,154	0,069034483
Off-Highway Trucks	2015	751	1000	Off-Highway Trucks_2015_1000	0,489174	0,411	1,77206	6,28012	0,005	0,185	0,17	511,1369	0,153	0,068586207
Off-Highway Trucks	2016	121	175	Off-Highway Trucks_2016_175	0,562854	0,473	3,45883	4,64707	0,005	0,258	0,237	503,5515	0,152	0,068137931
Off-Highway Trucks	2016	176	250	Off-Highway Trucks_2016_250	0,530487	0,446	1,82377	4,82646	0,005	0,208	0,191	502,4732	0,152	0,068137931
Off-Highway Trucks	2016	251	500	Off-Highway Trucks_2016_500	0,418147	0,351	1,88523	4,04798	0,005	0,153	0,141	509,8604	0,154	0,069034483
Off-Highway Trucks	2016	501	750	Off-Highway Trucks_2016_750	0,497396	0,418	2,43646	4,64247	0,005	0,187	0,172	508,3916	0,153	0,068586207
Off-Highway Trucks	2016	751	1000	Off-Highway Trucks_2016_1000	0,467579	0,393	1,70739	6,0352	0,005	0,175	0,161	505,7218	0,153	0,068586207
Off-Highway Trucks	2017	121	175	Off-Highway Trucks_2017_175	0,525186	0,441	3,43636	4,23649	0,005	0,233	0,215	495,924	0,152	0,068137931
Off-Highway Trucks	2017	176	250	Off-Highway Trucks_2017_250	0,496493	0,417	1,75281	4,36785	0,005	0,189	0,174	494,7935	0,152	0,068137931
Off-Highway Trucks	2017	251	500	Off-Highway Trucks_2017_500	0,387096	0,325	1,74773	3,66841	0,005	0,136	0,125	501,4368	0,154	0,069034483
Off-Highway Trucks	2017	501	750	Off-Highway Trucks_2017_750	0,468516	0,394	2,35644	4,25656	0,005	0,17	0,157	500,1987	0,153	0,068586207
Off-Highway Trucks	2017	751	1000	Off-Highway Trucks_2017_1000	0,430867	0,362	1,54555	5,65254	0,005	0,159	0,146	497,1154	0,152	0,068137931
Off-Highway Trucks	2018	121	175	Off-Highway Trucks_2018_175	0,456313	0,383	3,38333	3,54273	0,005	0,192	0,177	488,0439	0,152	0,068137931
Off-Highway Trucks	2018	176	250	Off-Highway Trucks_2018_250	0,405448	0,341	1,54329	3,45071	0,005	0,141	0,13	487,6353	0,152	0,068137931
Off-Highway Trucks	2018	251	500	Off-Highway Trucks_2018_500	0,341588	0,287	1,5595	3,08995	0,005	0,113	0,104	493,5059	0,154	0,069034483
Off-Highway Trucks	2018	501	750	Off-Highway Trucks_2018_750	0,413946	0,348	2,17619	3,69054	0,005	0,143	0,132	492,1136	0,153	0,068586207
Off-Highway Trucks	2018	751	1000	Off-Highway Trucks_2018_1000	0,352998	0,297	1,35734	4,85753	0,005	0,126	0,116	487,7902	0,152	0,068137931
Off-Highway Trucks	2019	121	175	Off-Highway Trucks_2019_175	0,38382	0,323	3,32598	2,82463	0,005	0,149	0,137	480,3623	0,152	0,068137931
Off-Highway Trucks	2019	176	250	Off-Highway Trucks_2019_250	0,365362	0,307	1,46079	2,98481	0,005	0,119	0,109	480,1703	0,152	0,068137931
Off-Highway Trucks	2019	251	500	Off-Highway Trucks_2019_500	0,313575	0,263	1,48346	2,66851	0,005	0,097	0,089	485,3832	0,154	0,069034483
Off-Highway Trucks	2019	501	750	Off-Highway Trucks_2019_750	0,389037	0,327	2,04129	3,32044	0,005	0,129	0,118	483,2182	0,153	0,068586207
Off-Highway Trucks	2019	751	1000	Off-Highway Trucks_2019_1000	0,351304	0,295	1,3561	4,76495	0,005	0,124	0,114	480,3479	0,152	0,068137931
Off-Highway Trucks	2020	121	175	Off-Highway Trucks_2020_175	0,36879	0,31	3,3388	2,62769	0,005	0,137	0,126	470,0967	0,152	0,068137931
Off-Highway Trucks	2020	176	250	Off-Highway Trucks_2020_250	0,327003	0,275	1,39106	2,50726	0,005	0,098	0,09	470,1675	0,152	0,068137931
Off-Highway Trucks	2020	251	500	Off-Highway Trucks_2020_500	0,292906	0,246	1,41417	2,34677	0,005	0,086	0,079	474,5787	0,153	0,068586207
Off-Highway Trucks	2020	501	750	Off-Highway Trucks_2020_750	0,371665	0,312	2,02683	3,05816	0,005	0,12	0,11	472,7499	0,153	0,068586207
Off-Highway Trucks	2020	751	1000	Off-Highway Trucks_2020_1000	0,360605	0,303	1,37163	4,79365	0,005	0,125	0,115	469,8892	0,152	0,068137931
Off-Highway Trucks	2021	121	175	Off-Highway Trucks_2021_175	0,331341	0,278	3,32405	2,24626	0,005	0,113	0,104	470,2898	0,152	0,068137931
Off-Highway Trucks	2021	176	250	Off-Highway Trucks_2021_250	0,29675	0,249	1,34839	2,10869	0,005	0,082	0,076	470,1932	0,152	0,068137931
Off-Highway Trucks	2021	251	500	Off-Highway Trucks_2021_500	0,267636	0,225	1,33781	1,95357	0,005	0,072	0,066	474,542	0,153	0,068586207
Off-Highway Trucks	2021	501	750	Off-Highway Trucks_2021_750	0,348975	0,293	1,93522	2,66798	0,005	0,106	0,098	472,991	0,153	0,068586207
Off-Highway Trucks	2021	751	1000	Off-Highway Trucks_2021_1000	0,304392	0,256	1,25154	4,15817	0,005	0,099	0,091	471,0552	0,152	0,068137931
Off-Highway Trucks	2022	121	175	Off-Highway Trucks_2022_175	0,286556	0,241	3,28383	1,81091	0,005	0,088	0,081	470,1813	0,152	0,068137931
Off-Highway Trucks	2022	176	250	Off-Highway Trucks_2022_250	0,255309	0,215	1,27852	1,61794	0,005	0,064	0,059	469,6151	0,152	0,068137931
Off-Highway Trucks	2022	251	500	Off-Highway Trucks_2022_500	0,233409	0,196	1,24664	1,48975	0,005	0,054	0,05	474,7136	0,154	0,069034483
Off-Highway Trucks	2022	501	750	Off-Highway Trucks_2022_750	0,313397	0,263	1,74571	2,26799	0,005	0,088	0,081	473,9773	0,153	0,068586207
Off-Highway Trucks	2022	751	1000	Off-Highway Trucks_2022_1000	0,27833	0,234	1,2141	3,84239	0,005	0,086	0,079	472,3437	0,153	0,068586207
Off-Highway Trucks	2023	121	175	Off-Highway Trucks_2023_175	0,280582	0,236	3,30432	1,68277	0,005	0,081	0,074	470,2917	0,152	0,068137931
Off-Highway Trucks	2023	176	250	Off-Highway Trucks_2023_250	0,24623	0,207	1,27325	1,45572	0,005	0,059	0,054	469,4464	0,152	0,068137931
Off-Highway Trucks	2023	251	500	Off-Highway Trucks_2023_500	0,222566	0,187	1,22057	1,32428	0,005	0,048	0,044	475,0488	0,154	0,069034483
Off-Highway Trucks	2023	501	750	Off-Highway Trucks_2023_750	0,312722	0,263	1,71923	2,18151	0,005	0,084	0,078	473,7666	0,153	0,068586207
Off-Highway Trucks	2023	751	1000	Off-Highway Trucks_2023_1000	0,254284	0,214	1,19398	3,54374	0,005	0,074	0,068	472,8574	0,153	0,068586207
Off-Highway Trucks	2024	121	175	Off-Highway Trucks_2024_175	com	0,224	3,3248	1,49436	0,005	0,07	0,064	470,2638	0,152	0,068137931
Off-Highway Trucks	2024	176	250	Off-Highway Trucks_2024_250	0,240426	0,202	1,25915	1,35543	0,005	0,054	0,05	469,1126	0,152	0,068137931
Off-Highway Trucks	2024	251	500	Off-Highway Trucks_2024_500	0,219543	0,184	1,20637	1,23518	0,005	0,044	0,041	475,2203	0,154	0,069034483
Off-Highway Trucks	2024	501	750	Off-Highway Trucks_2024_750	0,308071	0,259	1,64986	2,08486	0,005	0,079	0,073	473,8394	0,153	0,068586207
Off-Highway Trucks	2024	751	1000	Off-Highway Trucks_2024_1000	0,248432	0,209	1,19994	3,43925	0,005	0,069	0,064	473,0969	0,153	0,068586207
Off-Highway Trucks	2025	121	175	Off-Highway Trucks_2025_175	0,254265	0,214	3,32765	1,3354	0,005	0,065	0,06	470,0035	0,152	0,068137931
Off-Highway Trucks	2025	176	250	Off-Highway Trucks_2025_250	0,220008	0,185	1,21268	1,12886	0,005	0,043	0,04	469,1258	0,152	0,068137931
Off-Highway Trucks	2025	251	500	Off-Highway Trucks_2025_500	0,210955	0,177	1,18233	1,06379	0,005	0,038	0,035	474,9697	0,154	0,069034483
Off-Highway Trucks	2025	501	750	Off-Highway Trucks_2025_750	0,280009	0,235	1,57807	1,75055	0,005	0,066	0,061	476,314	0,154	0,069034483
Off-Highway Trucks	2025	751	1000	Off-Highway Trucks_2025_1000	0,222695	0,187	1,14565	3,13521	0,005	0,057	0,052	473,3693	0,153	0,068586207
Off-Highway Trucks	2030	121	175	Off-Highway Trucks_2030_175	0,739	0,229	3,425	0,563	0,006	0,025	0,025	568,299	0,02	0,008965517

Off-Highway Trucks	2030	176	250	Off-Highway Trucks_2030_250	0,932	0,217	1,166	0,481	0,006	0,017	0,017	568,3	0,019	0,008517241
Off-Highway Trucks	2030	251	500	Off-Highway Trucks_2030_500	1,52	0,216	1,104	0,458	0,005	0,017	0,017	568,299	0,019	0,008517241
Off-Highway Trucks	2030	501	750	Off-Highway Trucks_2030_750	2,467	0,217	1,104	0,463	0,005	0,017	0,017	568,299	0,019	0,008517241
Off-Highway Trucks	2030	751	1000	Off-Highway Trucks_2030_1000	3,55	0,22	1,107	2,651	0,005	0,033	0,033	568,3	0,019	0,008517241
Off-Highway Trucks	2035	121	175	Off-Highway Trucks_2035_175	0,68	0,211	3,425	0,38	0,006	0,016	0,016	568,299	0,019	0,008517241
Off-Highway Trucks	2035	176	250	Off-Highway Trucks_2035_250	0,894	0,208	1,167	0,353	0,006	0,013	0,013	568,299	0,018	0,008068966
Off-Highway Trucks	2035	251	500	Off-Highway Trucks_2035_500	1,461	0,208	1,105	0,348	0,005	0,013	0,013	568,299	0,018	0,008068966
Off-Highway Trucks	2035	501	750	Off-Highway Trucks_2035_750	2,371	0,208	1,105	0,348	0,005	0,013	0,013	568,299	0,018	0,008068966
Off-Highway Trucks	2035	751	1000	Off-Highway Trucks_2035_1000	3,368	0,209	1,105	2,565	0,005	0,028	0,028	568,299	0,018	0,008068966
Off-Highway Trucks	2040	121	175	Off-Highway Trucks_2040_175	0,662	0,205	3,426	0,318	0,006	0,013	0,013	568,299	0,018	0,008068966
Off-Highway Trucks	2040	176	250	Off-Highway Trucks_2040_250	0,877	0,204	1,167	0,305	0,006	0,012	0,012	568,3	0,018	0,008068966
Off-Highway Trucks	2040	251	500	Off-Highway Trucks_2040_500	1,434	0,204	1,105	0,305	0,005	0,012	0,012	568,299	0,018	0,008068966
Off-Highway Trucks	2040	501	750	Off-Highway Trucks_2040_750	2,327	0,204	1,105	0,305	0,005	0,012	0,012	568,299	0,018	0,008068966
Off-Highway Trucks	2040	751	1000	Off-Highway Trucks_2040_1000	3,296	0,205	1,105	2,532	0,005	0,026	0,026	568,299	0,018	0,008068966
Other Construction Equipment	1990	6	15	Other Construction Equipment_1990_15	5,348	1,804	4,999	9,999	1,049	0,975	0,975	568,3	0,162	0,07262069
Other Construction Equipment	1990	16	25	Other Construction Equipment_1990_25	8,578	2,213	4,999	6,919	0,855	0,741	0,741	568,299	0,199	0,089206897
Other Construction Equipment	1990	26	50	Other Construction Equipment_1990_50	39,33	4,791	9,693	7,947	0,871	1,267	1,267	568,299	0,432	0,193655172
Other Construction Equipment	1990	51	120	Other Construction Equipment_1990_120	56,637	2,388	5,782	15,176	0,791	1,343	1,343	568,299	0,215	0,09637931
Other Construction Equipment	1990	121	175	Other Construction Equipment_1990_175	60,86	1,948	5,191	15,112	0,758	1,085	1,085	568,299	0,175	0,078448276
Other Construction Equipment	1990	251	500	Other Construction Equipment_1990_500	128,26	1,72	11,412	14,332	0,662	0,927	0,927	568,299	0,155	0,069482759
Other Construction Equipment	2000	6	15	Other Construction Equipment_2000_15	4,374	1,475	4,49	8,242	0,079	0,676	0,676	568,299	0,133	0,05962069
Other Construction Equipment	2000	16	25	Other Construction Equipment_2000_25	7,591	1,958	4,53	6,358	0,065	0,563	0,563	568,3	0,176	0,078896552
Other Construction Equipment	2000	26	50	Other Construction Equipment_2000_50	30,619	3,73	7,85	6,784	0,066	0,816	0,816	568,299	0,336	0,15062069
Other Construction Equipment	2000	51	120	Other Construction Equipment_2000_120	38,817	1,636	4,283	9,507	0,06	0,786	0,786	568,3	0,147	0,065896552
Other Construction Equipment	2000	121	175	Other Construction Equipment_2000_175	34,573	1,106	3,417	8,749	0,057	0,453	0,453	568,299	0,099	0,04437931
Other Construction Equipment	2000	251	500	Other Construction Equipment_2000_500	61,92	0,83	3,67	8,069	0,05	0,321	0,321	568,299	0,074	0,033172414
Other Construction Equipment	2005	6	15	Other Construction Equipment_2005_15	2,271	0,766	3,469	5,228	0,079	0,361	0,361	568,299	0,069	0,030931034
Other Construction Equipment	2005	16	25	Other Construction Equipment_2005_25	3,564	0,919	2,642	5,412	0,065	0,347	0,347	568,3	0,082	0,036758621
Other Construction Equipment	2005	26	50	Other Construction Equipment_2005_50	26,204	3,192	7,102	6,226	0,066	0,739	0,739	568,299	0,288	0,129103448
Other Construction Equipment	2005	51	120	Other Construction Equipment_2005_120	33,145	1,397	4,043	8,067	0,06	0,725	0,725	568,299	0,126	0,056482759
Other Construction Equipment	2005	121	175	Other Construction Equipment_2005_175	28,235	0,903	3,208	7,379	0,057	0,392	0,392	568,299	0,081	0,036310345
Other Construction Equipment	2005	251	500	Other Construction Equipment_2005_500	41,035	0,55	2,051	6,334	0,05	0,22	0,22	568,299	0,049	0,021965517
Other Construction Equipment	2010	6	15	Other Construction Equipment_2010_15	1,52864	1,284	5,29076	5,55407	0,005	0,497	0,457	587,5495	0,171	0,076655172
Other Construction Equipment	2010	16	25	Other Construction Equipment_2010_25	1,52864	1,284	5,29076	5,55407	0,005	0,497	0,457	587,5495	0,171	0,076655172
Other Construction Equipment	2010	26	50	Other Construction Equipment_2010_50	1,52864	1,284	5,29076	5,55407	0,005	0,497	0,457	587,5495	0,171	0,076655172
Other Construction Equipment	2010	51	120	Other Construction Equipment_2010_120	0,92739	0,779	3,89903	7,11752	0,005	0,549	0,505	523,1661	0,152	0,068137931
Other Construction Equipment	2010	121	175	Other Construction Equipment_2010_175	0,769602	0,647	3,47406	7,30949	0,005	0,38	0,349	522,1244	0,152	0,068137931
Other Construction Equipment	2010	251	500	Other Construction Equipment_2010_500	0,480247	0,404	3,20434	5,78616	0,005	0,219	0,201	530,8514	0,155	0,069482759
Other Construction Equipment	2011	6	15	Other Construction Equipment_2011_15	1,531741	1,287	5,36962	5,5686	0,005	0,499	0,459	586,0703	0,171	0,076655172
Other Construction Equipment	2011	16	25	Other Construction Equipment_2011_25	1,531741	1,287	5,36962	5,5686	0,005	0,499	0,459	586,0703	0,171	0,076655172
Other Construction Equipment	2011	26	50	Other Construction Equipment_2011_50	1,531741	1,287	5,36962	5,5686	0,005	0,499	0,459	586,0703	0,171	0,076655172
Other Construction Equipment	2011	51	120	Other Construction Equipment_2011_120	0,909764	0,764	3,89723	6,98332	0,005	0,542	0,498	521,5282	0,152	0,068137931
Other Construction Equipment	2011	121	175	Other Construction Equipment_2011_175	0,725704	0,61	3,41832	6,92098	0,005	0,361	0,332	520,664	0,152	0,068137931
Other Construction Equipment	2011	251	500	Other Construction Equipment_2011_500	0,449646	0,378	2,91483	5,42766	0,005	0,204	0,188	529,9639	0,155	0,069482759
Other Construction Equipment	2012	6	15	Other Construction Equipment_2012_15	1,548775	1,301	5,47004	5,58169	0,005	0,503	0,463	584,6639	0,171	0,076655172
Other Construction Equipment	2012	16	25	Other Construction Equipment_2012_25	1,548775	1,301	5,47004	5,58169	0,005	0,503	0,463	584,6639	0,171	0,076655172
Other Construction Equipment	2012	26	50	Other Construction Equipment_2012_50	1,548775	1,301	5,47004	5,58169	0,005	0,503	0,463	584,6639	0,171	0,076655172
Other Construction Equipment	2012	51	120	Other Construction Equipment_2012_120	0,910724	0,765	3,91674	6,95644	0,005	0,543	0,5	519,9075	0,152	0,068137931
Other Construction Equipment	2012	121	175	Other Construction Equipment_2012_175	0,730754	0,614	3,4429	6,91612	0,005	0,363	0,334	519,3479	0,152	0,068137931
Other Construction Equipment	2012	251	500	Other Construction Equipment_2012_500	0,458869	0,386	2,95715	5,42334	0,005	0,206	0,189	528,6246	0,155	0,069482759
Other Construction Equipment	2013	6	15	Other Construction Equipment_2013_15	1,571874	1,321	5,57699	5,60361	0,005	0,509	0,468	581,8471	0,171	0,076655172
Other Construction Equipment	2013	16	25	Other Construction Equipment_2013_25	1,571874	1,321	5,57699	5,60361	0,005	0,509	0,468	581,8471	0,171	0,076655172
Other Construction Equipment	2013	26	50	Other Construction Equipment_2013_50	1,571874	1,321	5,57699	5,60361	0,005	0,509	0,468	581,8471	0,171	0,076655172
Other Construction Equipment	2013	51	120	Other Construction Equipment_2013_120	0,892781	0,75	3,91866	6,82868	0,005	0,532	0,489	517,5939	0,152	0,068137931
Other Construction Equipment	2013	121	175	Other Construction Equipment_2013_175	0,708053	0,595	3,41257	6,69102	0,005	0,351	0,323	516,9857	0,152	0,068137931
Other Construction Equipment	2013	251	500	Other Construction Equipment_2013_500	0,440093	0,37	2,79519	5,14317	0,005	0,194	0,179	525,1086	0,154	0,069034483
Other Construction Equipment	2014	6	15	Other Construction Equipment_2014_15	1,547867	1,301	5,60223	5,56546	0,005	0,502	0,462	578,9591	0,171	0,076655172
Other Construction Equipment	2014	16	25	Other Construction Equipment_2014_25	1,547867	1,301	5,60223	5,56546	0,005	0,502	0,462	578,9591	0,171	0,076655172
Other Construction Equipment	2014	26	50	Other Construction Equipment_2014_50	1,547867	1,301	5,60223	5,56546	0,005	0,502	0,462	578,9591	0,171	0,076655172
Other Construction Equipment	2014	51	120	Other Construction Equipment_2014_120	0,866935	0,728	3,90558	6,63282	0,005	0,518	0,476	515,2847	0,152	0,068137931
Other Construction Equipment	2014	121	175	Other Construction Equipment_2014_175	0,674237	0,567	3,38516	6,37185	0,005	0,333	0,307	514,5518	0,152	0,068137931
Other Construction Equipment	2014	251	500	Other Construction Equipment_2014_500	0,392211	0,33	2,47571	4,5608	0,005	0,168	0,155	520,9444	0,154	0,069034483
Other Construction Equipment	2015	6	15	Other Construction Equipment_2015_15	1,557753	1,309	5,68113	5,56397	0,005	0,503	0,463	573,0198	0,171	0,076655172
Other Construction Equipment	2015	16	25	Other Construction Equipment_2015_25	1,557753	1,309	5,68113	5,56397	0,005	0,503	0,463	573,0198	0,171	0,076655172
Other Construction Equipment	2015	26	50	Other Construction Equipment_2015_50	1,557753	1,309	5,68113	5,56397	0,005	0,503	0,463	573,0198	0,171	0,076655172
Other Construction Equipment	2015	51	120	Other Construction Equipment_2015_120	0,860334	0,723	3,9159	6,53649	0,005	0,512	0,471	510,1706	0,152	0,068137931
Other Construction Equipment	2015	121	175	Other Construction Equipment_2015_175	0,66302	0,557	3,38183	6,2305	0,005	0,326	0,3	509,3069	0,152	0,068137931
Other Construction Equipment	2015	251	500	Other Construction Equipment_2015_500	0,386006	0,324	2,40724	4,41519	0,005	0,163	0,15	515,1953	0,154	0,069034483
Other Construction Equipment	2016	6	15	Other Construction Equipment_2016_15	1,524032	1,281	5,67687	5,49921	0,005	0,492	0,453	566,9782	0,171	0,076655172
Other Construction Equipment	2016	16	25	Other Construction Equipment_2016_25	1,524032	1,281	5,67687	5,49921	0,005	0,492	0,453	566,9782	0,171	0,076655172
Other Construction Equipment	2016	26	50	Other Construction Equipment_2016_50	1,524032	1,281	5,67687	5,49921	0,005	0,492	0,453	566,9782	0,171	0,076655172
Other Construction Equipment	2016	51	120	Other Construction Equipment_2016_120	0,837049	0,703	3,90894	6,32533	0,005	0,496	0,456	505,349	0,152	0,068137931
Other Construction Equipment	2016	121	175	Other Construction Equipment_2016_175	0,62413	0,524	3,35672	5,81763	0,005	0,306	0,281	503,9641	0,152	0,068137931

Other Construction Equipment	2016	251	500	Other Construction Equipment_2016_500	0,366005	0,308	2,28488	4,08972	0,005	0,151	0,139	509,7062	0,154	0,069034483
Other Construction Equipment	2017	6	15	Other Construction Equipment_2017_15	1,480652	1,244	5,65509	5,42066	0,005	0,477	0,439	558,0007	0,171	0,076655172
Other Construction Equipment	2017	16	25	Other Construction Equipment_2017_25	1,480652	1,244	5,65509	5,42066	0,005	0,477	0,439	558,0007	0,171	0,076655172
Other Construction Equipment	2017	26	50	Other Construction Equipment_2017_50	1,480652	1,244	5,65509	5,42066	0,005	0,477	0,439	558,0007	0,171	0,076655172
Other Construction Equipment	2017	51	120	Other Construction Equipment_2017_120	0,804436	0,676	3,88542	6,06955	0,005	0,475	0,437	497,3832	0,152	0,068137931
Other Construction Equipment	2017	121	175	Other Construction Equipment_2017_175	0,595557	0,5	3,33767	5,49424	0,005	0,29	0,267	495,9311	0,152	0,068137931
Other Construction Equipment	2017	251	500	Other Construction Equipment_2017_500	0,3449	0,29	2,12114	3,77706	0,005	0,138	0,127	501,1295	0,154	0,069034483
Other Construction Equipment	2018	6	15	Other Construction Equipment_2018_15	1,39068	1,169	5,54108	5,27161	0,005	0,449	0,413	548,9388	0,171	0,076655172
Other Construction Equipment	2018	16	25	Other Construction Equipment_2018_25	1,39068	1,169	5,54108	5,27161	0,005	0,449	0,413	548,9388	0,171	0,076655172
Other Construction Equipment	2018	26	50	Other Construction Equipment_2018_50	1,39068	1,169	5,54108	5,27161	0,005	0,449	0,413	548,9388	0,171	0,076655172
Other Construction Equipment	2018	51	120	Other Construction Equipment_2018_120	0,711314	0,598	3,79863	5,44123	0,005	0,417	0,383	490,018	0,153	0,068586207
Other Construction Equipment	2018	121	175	Other Construction Equipment_2018_175	0,519398	0,436	3,26346	4,75499	0,005	0,25	0,23	487,9859	0,152	0,068137931
Other Construction Equipment	2018	251	500	Other Construction Equipment_2018_500	0,298599	0,251	1,81261	3,16693	0,005	0,115	0,105	493,36	0,154	0,069034483
Other Construction Equipment	2019	6	15	Other Construction Equipment_2019_15	1,370834	1,152	5,54123	5,20338	0,005	0,437	0,402	539,7349	0,171	0,076655172
Other Construction Equipment	2019	16	25	Other Construction Equipment_2019_25	1,370834	1,152	5,54123	5,20338	0,005	0,437	0,402	539,7349	0,171	0,076655172
Other Construction Equipment	2019	26	50	Other Construction Equipment_2019_50	1,370834	1,152	5,54123	5,20338	0,005	0,437	0,402	539,7349	0,171	0,076655172
Other Construction Equipment	2019	51	120	Other Construction Equipment_2019_120	0,655004	0,55	3,7535	5,04831	0,005	0,379	0,349	482,2177	0,153	0,068586207
Other Construction Equipment	2019	121	175	Other Construction Equipment_2019_175	0,490382	0,412	3,25619	4,4331	0,005	0,233	0,215	480,4518	0,152	0,068137931
Other Construction Equipment	2019	251	500	Other Construction Equipment_2019_500	0,277883	0,233	1,66739	2,85547	0,005	0,103	0,094	485,4127	0,154	0,069034483
Other Construction Equipment	2020	6	15	Other Construction Equipment_2020_15	1,276029	1,072	5,40446	5,03626	0,005	0,405	0,373	527,9656	0,171	0,076655172
Other Construction Equipment	2020	16	25	Other Construction Equipment_2020_25	1,276029	1,072	5,40446	5,03626	0,005	0,405	0,373	527,9656	0,171	0,076655172
Other Construction Equipment	2020	26	50	Other Construction Equipment_2020_50	1,276029	1,072	5,40446	5,03626	0,005	0,405	0,373	527,9656	0,171	0,076655172
Other Construction Equipment	2020	51	120	Other Construction Equipment_2020_120	0,617777	0,519	3,73189	4,7712	0,005	0,354	0,325	472,2162	0,153	0,068586207
Other Construction Equipment	2020	121	175	Other Construction Equipment_2020_175	0,461441	0,388	3,23528	4,11203	0,005	0,217	0,2	469,9837	0,152	0,068137931
Other Construction Equipment	2020	251	500	Other Construction Equipment_2020_500	0,266788	0,224	1,6338	2,63672	0,005	0,096	0,088	475,2326	0,154	0,069034483
Other Construction Equipment	2021	6	15	Other Construction Equipment_2021_15	1,201423	1,01	5,30749	4,90234	0,005	0,382	0,351	527,7834	0,171	0,076655172
Other Construction Equipment	2021	16	25	Other Construction Equipment_2021_25	1,201423	1,01	5,30749	4,90234	0,005	0,382	0,351	527,7834	0,171	0,076655172
Other Construction Equipment	2021	26	50	Other Construction Equipment_2021_50	1,201423	1,01	5,30749	4,90234	0,005	0,382	0,351	527,7834	0,171	0,076655172
Other Construction Equipment	2021	51	120	Other Construction Equipment_2021_120	0,573212	0,482	3,70304	4,4558	0,005	0,323	0,298	472,275	0,153	0,068586207
Other Construction Equipment	2021	121	175	Other Construction Equipment_2021_175	0,392185	0,33	3,18275	3,43847	0,005	0,18	0,165	469,7642	0,152	0,068137931
Other Construction Equipment	2021	251	500	Other Construction Equipment_2021_500	0,256006	0,215	1,59874	2,42822	0,005	0,09	0,082	475,2124	0,154	0,069034483
Other Construction Equipment	2022	6	15	Other Construction Equipment_2022_15	1,094466	0,92	5,16732	4,74117	0,005	0,348	0,32	529,1825	0,171	0,076655172
Other Construction Equipment	2022	16	25	Other Construction Equipment_2022_25	1,094466	0,92	5,16732	4,74117	0,005	0,348	0,32	529,1825	0,171	0,076655172
Other Construction Equipment	2022	26	50	Other Construction Equipment_2022_50	1,094466	0,92	5,16732	4,74117	0,005	0,348	0,32	529,1825	0,171	0,076655172
Other Construction Equipment	2022	51	120	Other Construction Equipment_2022_120	0,523663	0,44	3,66623	4,09846	0,005	0,288	0,265	472,3178	0,153	0,068586207
Other Construction Equipment	2022	121	175	Other Construction Equipment_2022_175	0,351187	0,295	3,15539	2,99437	0,005	0,156	0,144	469,6126	0,152	0,068137931
Other Construction Equipment	2022	251	500	Other Construction Equipment_2022_500	0,223796	0,188	1,43828	1,97544	0,005	0,074	0,068	475,9983	0,154	0,069034483
Other Construction Equipment	2023	6	15	Other Construction Equipment_2023_15	1,030598	0,866	5,07368	4,59446	0,005	0,322	0,296	529,3389	0,171	0,076655172
Other Construction Equipment	2023	16	25	Other Construction Equipment_2023_25	1,030598	0,866	5,07368	4,59446	0,005	0,322	0,296	529,3389	0,171	0,076655172
Other Construction Equipment	2023	26	50	Other Construction Equipment_2023_50	1,030598	0,866	5,07368	4,59446	0,005	0,322	0,296	529,3389	0,171	0,076655172
Other Construction Equipment	2023	51	120	Other Construction Equipment_2023_120	0,482844	0,406	3,63188	3,79013	0,005	0,259	0,238	471,9899	0,153	0,068586207
Other Construction Equipment	2023	121	175	Other Construction Equipment_2023_175	0,325455	0,273	3,14152	2,69821	0,005	0,14	0,129	469,5579	0,152	0,068137931
Other Construction Equipment	2023	251	500	Other Construction Equipment_2023_500	0,214667	0,18	1,39596	1,81226	0,005	0,069	0,063	476,1847	0,154	0,069034483
Other Construction Equipment	2024	6	15	Other Construction Equipment_2024_15	0,984979	0,828	5,03181	4,51017	0,005	0,305	0,28	529,2094	0,171	0,076655172
Other Construction Equipment	2024	16	25	Other Construction Equipment_2024_25	0,984979	0,828	5,03181	4,51017	0,005	0,305	0,28	529,2094	0,171	0,076655172
Other Construction Equipment	2024	26	50	Other Construction Equipment_2024_50	0,984979	0,828	5,03181	4,51017	0,005	0,305	0,28	529,2094	0,171	0,076655172
Other Construction Equipment	2024	51	120	Other Construction Equipment_2024_120	0,454266	0,382	3,61958	3,58173	0,005	0,237	0,218	472,1254	0,153	0,068586207
Other Construction Equipment	2024	121	175	Other Construction Equipment_2024_175	0,310043	0,261	3,14951	2,52019	0,005	0,13	0,12	469,5445	0,152	0,068137931
Other Construction Equipment	2024	251	500	Other Construction Equipment_2024_500	0,208244	0,175	1,38248	1,67692	0,005	0,064	0,059	476,4838	0,154	0,069034483
Other Construction Equipment	2025	6	15	Other Construction Equipment_2025_15	0,901061	0,757	4,87388	4,30575	0,005	0,268	0,246	528,9535	0,171	0,076655172
Other Construction Equipment	2025	16	25	Other Construction Equipment_2025_25	0,901061	0,757	4,87388	4,30575	0,005	0,268	0,246	528,9535	0,171	0,076655172
Other Construction Equipment	2025	26	50	Other Construction Equipment_2025_50	0,901061	0,757	4,87388	4,30575	0,005	0,268	0,246	528,9535	0,171	0,076655172
Other Construction Equipment	2025	51	120	Other Construction Equipment_2025_120	0,40612	0,341	3,58397	3,25221	0,005	0,203	0,187	472,7482	0,153	0,068586207
Other Construction Equipment	2025	121	175	Other Construction Equipment_2025_175	0,279358	0,235	3,13647	2,16742	0,005	0,112	0,103	469,843	0,152	0,068137931
Other Construction Equipment	2025	251	500	Other Construction Equipment_2025_500	0,200431	0,168	1,3582	1,55241	0,005	0,059	0,055	476,2959	0,154	0,069034483
Other Construction Equipment	2030	6	15	Other Construction Equipment_2030_15	1,96	0,661	3,469	4,142	0,008	0,161	0,161	568,299	0,059	0,026448276
Other Construction Equipment	2030	16	25	Other Construction Equipment_2030_25	2,657	0,685	2,339	4,332	0,007	0,161	0,161	568,299	0,061	0,027344828
Other Construction Equipment	2030	26	50	Other Construction Equipment_2030_50	3,526	0,429	4,39	3,19	0,007	0,03	0,03	568,299	0,038	0,017034483
Other Construction Equipment	2030	51	120	Other Construction Equipment_2030_120	5,348	0,225	3,538	1,576	0,006	0,027	0,027	568,3	0,02	0,008965517
Other Construction Equipment	2030	121	175	Other Construction Equipment_2030_175	5,057	0,161	3,127	0,459	0,006	0,019	0,019	568,299	0,014	0,006275862
Other Construction Equipment	2030	251	500	Other Construction Equipment_2030_500	11,523	0,154	1,028	0,391	0,005	0,014	0,014	568,3	0,013	0,005827586
Other Construction Equipment	2035	6	15	Other Construction Equipment_2035_15	1,96	0,661	3,469	4,142	0,008	0,161	0,161	568,299	0,059	0,026448276
Other Construction Equipment	2035	16	25	Other Construction Equipment_2035_25	2,657	0,685	2,339	4,332	0,007	0,161	0,161	568,299	0,061	0,027344828
Other Construction Equipment	2035	26	50	Other Construction Equipment_2035_50	3,367	0,41	4,377	3,124	0,007	0,018	0,018	568,299	0,037	0,016586207
Other Construction Equipment	2035	51	120	Other Construction Equipment_2035_120	5,057	0,213	3,536	1,474	0,006	0,017	0,017	568,299	0,019	0,008517241
Other Construction Equipment	2035	121	175	Other Construction Equipment_2035_175	4,686	0,15	3,128	0,334	0,006	0,013	0,013	568,299	0,013	0,005827586
Other Construction Equipment	2035	251	500	Other Construction Equipment_2035_500	11,034	0,147	1,029	0,311	0,005	0,011	0,011	568,299	0,013	0,005827586
Other Construction Equipment	2040	6	15	Other Construction Equipment_2040_15	1,96	0,661	3,47	4,142	0,008	0,161	0,161	568,3	0,059	0,026448276
Other Construction Equipment	2040	16	25	Other Construction Equipment_2040_25	2,657	0,685	2,339	4,332	0,007	0,161	0,161	568,299	0,061	0,027344828
Other Construction Equipment	2040	26	50	Other Construction Equipment_2040_50	3,359	0,409	4,377	3,096	0,007	0,015	0,015	568,3	0,036	0,016137931
Other Construction Equipment	2040	51	120	Other Construction Equipment_2040_120	4,992	0,21	3,536	1,441	0,006	0,014	0,014	568,299	0,018	0,008068966
Other Construction Equipment	2040	121	175	Other Construction Equipment_2040_175	4,556	0,145	3,128	0,29	0,006	0,011	0,011	568,299	0,013	0,005827586
Other Construction Equipment	2040	251	500	Other Construction Equipment_2040_500	10,825	0,145	1,029	0,282	0,005	0,01	0,01	568,299	0,013	0,005827586

Other General Industrial Equipment	1990	6	15	Other General Industrial Equipment_1990_15	4,264	1,804	4,999	9,999	0,833	0,968	0,968	568,299	0,162	0,07262069
Other General Industrial Equipment	1990	16	25	Other General Industrial Equipment_1990_25	12,555	2,213	4,999	6,919	0,679	0,735	0,735	568,299	0,199	0,089206897
Other General Industrial Equipment	1990	26	50	Other General Industrial Equipment_1990_50	38,808	4,828	9,768	7,957	0,692	1,266	1,266	568,299	0,435	0,195
Other General Industrial Equipment	1990	51	120	Other General Industrial Equipment_1990_120	54,2	2,363	5,72	14,962	0,628	1,331	1,331	568,299	0,213	0,095482759
Other General Industrial Equipment	1990	121	175	Other General Industrial Equipment_1990_175	57,106	1,61	5,066	13,434	0,602	0,88	0,88	568,299	0,145	0,065
Other General Industrial Equipment	1990	176	250	Other General Industrial Equipment_1990_250	80,71	1,61	5,066	13,434	0,602	0,88	0,88	568,299	0,145	0,065
Other General Industrial Equipment	1990	251	500	Other General Industrial Equipment_1990_500	139,861	1,425	11,207	12,743	0,525	0,756	0,756	568,299	0,128	0,05737931
Other General Industrial Equipment	1990	501	750	Other General Industrial Equipment_1990_750	230,516	1,425	11,207	12,743	0,538	0,756	0,756	568,299	0,128	0,05737931
Other General Industrial Equipment	1990	751	1000	Other General Industrial Equipment_1990_1000	293,256	1,417	11,207	12,743	0,538	0,746	0,746	568,299	0,127	0,056931034
Other General Industrial Equipment	2000	6	15	Other General Industrial Equipment_2000_15	2,475	1,047	4,258	7,362	0,079	0,428	0,428	568,299	0,094	0,042137931
Other General Industrial Equipment	2000	16	25	Other General Industrial Equipment_2000_25	5,83	1,027	4,322	6,284	0,064	0,431	0,431	568,299	0,092	0,041241379
Other General Industrial Equipment	2000	26	50	Other General Industrial Equipment_2000_50	36,086	4,49	9,236	7,09	0,065	0,935	0,935	568,299	0,405	0,181551724
Other General Industrial Equipment	2000	51	120	Other General Industrial Equipment_2000_120	43,196	1,883	4,733	10,664	0,059	0,91	0,91	568,299	0,169	0,075758621
Other General Industrial Equipment	2000	121	175	Other General Industrial Equipment_2000_175	44,74	1,261	3,852	9,686	0,057	0,536	0,536	568,299	0,113	0,050655172
Other General Industrial Equipment	2000	176	250	Other General Industrial Equipment_2000_250	53	1,057	3,072	9,325	0,057	0,438	0,438	568,299	0,095	0,042586207
Other General Industrial Equipment	2000	251	500	Other General Industrial Equipment_2000_500	93,834	0,956	5,179	8,862	0,049	0,385	0,385	568,299	0,086	0,038551724
Other General Industrial Equipment	2000	501	750	Other General Industrial Equipment_2000_750	154,656	0,956	5,179	8,862	0,051	0,385	0,385	568,3	0,086	0,038551724
Other General Industrial Equipment	2000	751	1000	Other General Industrial Equipment_2000_1000	214,063	1,034	5,791	9,479	0,051	0,385	0,385	568,299	0,093	0,041689655
Other General Industrial Equipment	2005	6	15	Other General Industrial Equipment_2005_15	1,674	0,708	3,469	4,985	0,079	0,35	0,35	568,299	0,063	0,028241379
Other General Industrial Equipment	2005	16	25	Other General Industrial Equipment_2005_25	4,288	0,755	2,4	5,226	0,064	0,315	0,315	568,299	0,068	0,030482759
Other General Industrial Equipment	2005	26	50	Other General Industrial Equipment_2005_50	33,133	4,122	8,765	6,676	0,065	0,888	0,888	568,299	0,371	0,166310345
Other General Industrial Equipment	2005	51	120	Other General Industrial Equipment_2005_120	37,812	1,649	4,418	9,041	0,059	0,867	0,867	568,299	0,148	0,066344828
Other General Industrial Equipment	2005	121	175	Other General Industrial Equipment_2005_175	38,439	1,084	3,513	8,273	0,057	0,479	0,479	568,299	0,097	0,043482759
Other General Industrial Equipment	2005	176	250	Other General Industrial Equipment_2005_250	38,228	0,762	2,065	7,795	0,057	0,301	0,301	568,299	0,068	0,030482759
Other General Industrial Equipment	2005	251	500	Other General Industrial Equipment_2005_500	66,246	0,675	2,681	7,094	0,049	0,269	0,269	568,299	0,06	0,026896552
Other General Industrial Equipment	2005	501	750	Other General Industrial Equipment_2005_750	110,94	0,686	2,681	7,252	0,051	0,272	0,272	568,3	0,061	0,027344828
Other General Industrial Equipment	2005	751	1000	Other General Industrial Equipment_2005_1000	166,893	0,806	3,276	8,322	0,051	0,28	0,28	568,299	0,072	0,032275862
Other General Industrial Equipment	2010	6	15	Other General Industrial Equipment_2010_15	1,873274	1,574	6,00712	5,68505	0,005	0,563	0,518	584,6401	0,17	0,076206897
Other General Industrial Equipment	2010	16	25	Other General Industrial Equipment_2010_25	1,873274	1,574	6,00712	5,68505	0,005	0,563	0,518	584,6401	0,17	0,076206897
Other General Industrial Equipment	2010	26	50	Other General Industrial Equipment_2010_50	1,873274	1,574	6,00712	5,68505	0,005	0,563	0,518	584,6401	0,17	0,076206897
Other General Industrial Equipment	2010	51	120	Other General Industrial Equipment_2010_120	1,01726	0,855	4,0773	7,36447	0,005	0,611	0,562	522,222	0,152	0,068137931
Other General Industrial Equipment	2010	121	175	Other General Industrial Equipment_2010_175	0,746027	0,627	3,51505	7,0202	0,005	0,379	0,349	524,278	0,153	0,068586207
Other General Industrial Equipment	2010	176	250	Other General Industrial Equipment_2010_250	0,769173	0,646	2,61803	8,04899	0,005	0,359	0,33	525,8035	0,153	0,068586207
Other General Industrial Equipment	2010	251	500	Other General Industrial Equipment_2010_500	0,489206	0,411	2,96412	5,68219	0,005	0,219	0,202	525,4767	0,153	0,068586207
Other General Industrial Equipment	2010	501	750	Other General Industrial Equipment_2010_750	0,368598	0,31	1,62081	4,78207	0,005	0,168	0,154	526,0709	0,153	0,068586207
Other General Industrial Equipment	2010	751	1000	Other General Industrial Equipment_2010_1000	0,368913	0,31	1,02418	6,10226	0,005	0,148	0,136	524,505	0,153	0,068586207
Other General Industrial Equipment	2011	6	15	Other General Industrial Equipment_2011_15	1,86071	1,564	6,08575	5,69446	0,005	0,562	0,517	583,1785	0,17	0,076206897
Other General Industrial Equipment	2011	16	25	Other General Industrial Equipment_2011_25	1,86071	1,564	6,08575	5,69446	0,005	0,562	0,517	583,1785	0,17	0,076206897
Other General Industrial Equipment	2011	26	50	Other General Industrial Equipment_2011_50	1,86071	1,564	6,08575	5,69446	0,005	0,562	0,517	583,1785	0,17	0,076206897
Other General Industrial Equipment	2011	51	120	Other General Industrial Equipment_2011_120	1,006419	0,846	4,08854	7,24885	0,005	0,609	0,56	520,9164	0,152	0,068137931
Other General Industrial Equipment	2011	121	175	Other General Industrial Equipment_2011_175	0,688559	0,579	3,47165	6,5273	0,005	0,352	0,324	522,9673	0,153	0,068586207
Other General Industrial Equipment	2011	176	250	Other General Industrial Equipment_2011_250	0,679053	0,571	2,33422	7,30022	0,005	0,313	0,288	524,489	0,153	0,068586207
Other General Industrial Equipment	2011	251	500	Other General Industrial Equipment_2011_500	0,467324	0,393	2,74249	5,42881	0,005	0,207	0,19	524,163	0,153	0,068586207
Other General Industrial Equipment	2011	501	750	Other General Industrial Equipment_2011_750	0,373245	0,314	1,62791	4,72869	0,005	0,163	0,15	524,7557	0,153	0,068586207
Other General Industrial Equipment	2011	751	1000	Other General Industrial Equipment_2011_1000	0,37971	0,319	1,03813	6,1714	0,005	0,153	0,141	523,1938	0,153	0,068586207
Other General Industrial Equipment	2012	6	15	Other General Industrial Equipment_2012_15	1,895405	1,593	6,24676	5,71254	0,005	0,569	0,524	581,7169	0,17	0,076206897
Other General Industrial Equipment	2012	16	25	Other General Industrial Equipment_2012_25	1,895405	1,593	6,24676	5,71254	0,005	0,569	0,524	581,7169	0,17	0,076206897
Other General Industrial Equipment	2012	26	50	Other General Industrial Equipment_2012_50	1,895405	1,593	6,24676	5,71254	0,005	0,569	0,524	581,7169	0,17	0,076206897
Other General Industrial Equipment	2012	51	120	Other General Industrial Equipment_2012_120	1,008569	0,847	4,12133	7,21493	0,005	0,612	0,563	519,6109	0,152	0,068137931
Other General Industrial Equipment	2012	121	175	Other General Industrial Equipment_2012_175	0,685664	0,576	3,49618	6,44491	0,005	0,349	0,321	521,6566	0,153	0,068586207
Other General Industrial Equipment	2012	176	250	Other General Industrial Equipment_2012_250	0,675065	0,567	2,33594	7,14362	0,005	0,308	0,284	523,1745	0,153	0,068586207
Other General Industrial Equipment	2012	251	500	Other General Industrial Equipment_2012_500	0,47625	0,4	2,75094	5,39821	0,005	0,207	0,19	522,8493	0,153	0,068586207
Other General Industrial Equipment	2012	501	750	Other General Industrial Equipment_2012_750	0,379047	0,319	1,63473	4,69855	0,005	0,161	0,148	523,4405	0,153	0,068586207
Other General Industrial Equipment	2012	751	1000	Other General Industrial Equipment_2012_1000	0,390508	0,328	1,05208	6,24054	0,005	0,158	0,145	521,8825	0,153	0,068586207
Other General Industrial Equipment	2013	6	15	Other General Industrial Equipment_2013_15	1,848739	1,553	6,26146	5,64536	0,005	0,556	0,511	578,7937	0,17	0,076206897
Other General Industrial Equipment	2013	16	25	Other General Industrial Equipment_2013_25	1,848739	1,553	6,26146	5,64536	0,005	0,556	0,511	578,7937	0,17	0,076206897
Other General Industrial Equipment	2013	26	50	Other General Industrial Equipment_2013_50	1,848739	1,553	6,26146	5,64536	0,005	0,556	0,511	578,7937	0,17	0,076206897
Other General Industrial Equipment	2013	51	120	Other General Industrial Equipment_2013_120	0,982208	0,825	4,11871	7,03299	0,005	0,597	0,549	516,9998	0,152	0,068137931
Other General Industrial Equipment	2013	121	175	Other General Industrial Equipment_2013_175	0,6403	0,538	3,4592	6,02319	0,005	0,324	0,298	519,0352	0,153	0,068586207
Other General Industrial Equipment	2013	176	250	Other General Industrial Equipment_2013_250	0,609561	0,512	2,15134	6,51958	0,005	0,273	0,251	520,5455	0,153	0,068586207
Other General Industrial Equipment	2013	251	500	Other General Industrial Equipment_2013_500	0,434695	0,365	2,62159	4,82071	0,005	0,183	0,168	520,2219	0,153	0,068586207
Other General Industrial Equipment	2013	501	750	Other General Industrial Equipment_2013_750	0,344704	0,29	1,58393	4,12057	0,005	0,139	0,128	520,8102	0,153	0,068586207
Other General Industrial Equipment	2013	751	1000	Other General Industrial Equipment_2013_1000	0,401306	0,337	1,06602	6,30968	0,005	0,162	0,149	519,26	0,153	0,068586207
Other General Industrial Equipment	2014	6	15	Other General Industrial Equipment_2014_15	1,810128	1,521	6,28785	5,58361	0,005	0,544	0,5	575,8705	0,17	0,076206897
Other General Industrial Equipment	2014	16	25	Other General Industrial Equipment_2014_25	1,810128	1,521	6,28785	5,58361	0,005	0,544	0,5	575,8705	0,17	0,076206897
Other General Industrial Equipment	2014	26	50	Other General Industrial Equipment_2014_50	1,810128	1,521	6,28785	5,58361	0,005	0,544	0,5	575,8705	0,17	0,076206897
Other General Industrial Equipment	2014	51	120	Other General Industrial Equipment_2014_120	0,938561	0,789	4,09005	6,72277	0,005	0,574	0,528	514,3886	0,152	0,068137931
Other General Industrial Equipment	2014	121	175	Other General Industrial Equipment_2014_175	0,621882	0,523	3,46929	5,79166	0,005	0,312	0,287	516,4138	0,153	0,068586207
Other General Industrial Equipment	2014	176	250	Other General Industrial Equipment_2014_250	0,580321	0,488	2,05376	6,15263	0,005	0,255	0,234	517,9164	0,153	0,068586207
Other General Industrial Equipment	2014	251	500	Other General Industrial Equipment_2014_500	0,422239	0,355	2,49943	4,56494	0,005	0,172	0,159	517,5945	0,153	0,068586207
Other General Industrial Equipment	2014	501	750	Other General Industrial Equipment_2014_750	0,304364	0,256	1,48882	3,62195	0,005	0,115	0,106	518,1798	0,153	0,068586207
Other General Industrial Equipment	2014	751	1000	Other General Industrial Equipment_2014_1000	0,412103	0,346	1,07997	6,37883	0,005	0,167	0,153	516,6375	0,153	0,068586207
Other General Industrial Equipment	2015	6	15	Other General Industrial Equipment_2015_15	1,779268	1,495	6,32452	5,52435	0,005	0,532	0,49	570,0241	0,17	0,076206897

Other General Industrial Equipment	2015	16	25	Other General Industrial Equipment_2015_25	1,779268	1,495	6,32452	5,52435	0,005	0,532	0,49	570,0241	0,17	0,076206897
Other General Industrial Equipment	2015	26	50	Other General Industrial Equipment_2015_50	1,779268	1,495	6,32452	5,52435	0,005	0,532	0,49	570,0241	0,17	0,076206897
Other General Industrial Equipment	2015	51	120	Other General Industrial Equipment_2015_120	0,905303	0,761	4,0811	6,50163	0,005	0,553	0,509	509,1664	0,152	0,068137931
Other General Industrial Equipment	2015	121	175	Other General Industrial Equipment_2015_175	0,589015	0,495	3,45434	5,3974	0,005	0,294	0,27	511,171	0,153	0,068586207
Other General Industrial Equipment	2015	176	250	Other General Industrial Equipment_2015_250	0,538134	0,452	1,9257	5,64293	0,005	0,23	0,211	512,6584	0,153	0,068586207
Other General Industrial Equipment	2015	251	500	Other General Industrial Equipment_2015_500	0,420225	0,353	2,43603	4,42481	0,005	0,167	0,154	512,3397	0,153	0,068586207
Other General Industrial Equipment	2015	501	750	Other General Industrial Equipment_2015_750	0,298831	0,251	1,49062	3,36512	0,005	0,109	0,1	512,9191	0,153	0,068586207
Other General Industrial Equipment	2015	751	1000	Other General Industrial Equipment_2015_1000	0,422901	0,355	1,09391	6,44797	0,005	0,171	0,158	511,3924	0,153	0,068586207
Other General Industrial Equipment	2016	6	15	Other General Industrial Equipment_2016_15	1,690474	1,42	6,25866	5,40705	0,005	0,506	0,466	564,1777	0,17	0,076206897
Other General Industrial Equipment	2016	16	25	Other General Industrial Equipment_2016_25	1,690474	1,42	6,25866	5,40705	0,005	0,506	0,466	564,1777	0,17	0,076206897
Other General Industrial Equipment	2016	26	50	Other General Industrial Equipment_2016_50	1,690474	1,42	6,25866	5,40705	0,005	0,506	0,466	564,1777	0,17	0,076206897
Other General Industrial Equipment	2016	51	120	Other General Industrial Equipment_2016_120	0,851445	0,715	4,04541	6,14411	0,005	0,518	0,476	503,9442	0,152	0,068137931
Other General Industrial Equipment	2016	121	175	Other General Industrial Equipment_2016_175	0,559455	0,47	3,43665	5,05466	0,005	0,276	0,254	505,9282	0,153	0,068586207
Other General Industrial Equipment	2016	176	250	Other General Industrial Equipment_2016_250	0,519923	0,437	1,8667	5,40733	0,005	0,217	0,2	507,4004	0,153	0,068586207
Other General Industrial Equipment	2016	251	500	Other General Industrial Equipment_2016_500	0,407021	0,342	2,36652	4,14966	0,005	0,159	0,146	507,085	0,153	0,068586207
Other General Industrial Equipment	2016	501	750	Other General Industrial Equipment_2016_750	0,289084	0,243	1,49061	3,10202	0,005	0,1	0,092	507,6584	0,153	0,068586207
Other General Industrial Equipment	2016	751	1000	Other General Industrial Equipment_2016_1000	0,288345	0,242	1,04483	4,7462	0,005	0,112	0,103	506,1474	0,153	0,068586207
Other General Industrial Equipment	2017	6	15	Other General Industrial Equipment_2017_15	1,605819	1,349	6,17923	5,27694	0,005	0,479	0,441	555,4081	0,17	0,076206897
Other General Industrial Equipment	2017	16	25	Other General Industrial Equipment_2017_25	1,605819	1,349	6,17923	5,27694	0,005	0,479	0,441	555,4081	0,17	0,076206897
Other General Industrial Equipment	2017	26	50	Other General Industrial Equipment_2017_50	1,605819	1,349	6,17923	5,27694	0,005	0,479	0,441	555,4081	0,17	0,076206897
Other General Industrial Equipment	2017	51	120	Other General Industrial Equipment_2017_120	0,785454	0,66	3,99811	5,72138	0,005	0,47	0,433	496,1109	0,152	0,068137931
Other General Industrial Equipment	2017	121	175	Other General Industrial Equipment_2017_175	0,520155	0,437	3,39928	4,53359	0,005	0,25	0,23	498,0641	0,153	0,068586207
Other General Industrial Equipment	2017	176	250	Other General Industrial Equipment_2017_250	0,489435	0,411	1,78	5,02246	0,005	0,199	0,183	499,5133	0,153	0,068586207
Other General Industrial Equipment	2017	251	500	Other General Industrial Equipment_2017_500	0,397215	0,334	2,36453	3,9491	0,005	0,152	0,14	499,2028	0,153	0,068586207
Other General Industrial Equipment	2017	501	750	Other General Industrial Equipment_2017_750	0,260833	0,219	1,48016	2,59187	0,005	0,086	0,079	499,7673	0,153	0,068586207
Other General Industrial Equipment	2017	751	1000	Other General Industrial Equipment_2017_1000	0,29828	0,251	1,05719	4,7865	0,005	0,114	0,105	498,2798	0,153	0,068586207
Other General Industrial Equipment	2018	6	15	Other General Industrial Equipment_2018_15	1,373834	1,154	5,82717	4,97857	0,005	0,414	0,381	546,6385	0,17	0,076206897
Other General Industrial Equipment	2018	16	25	Other General Industrial Equipment_2018_25	1,373834	1,154	5,82717	4,97857	0,005	0,414	0,381	546,6385	0,17	0,076206897
Other General Industrial Equipment	2018	26	50	Other General Industrial Equipment_2018_50	1,373834	1,154	5,82717	4,97857	0,005	0,414	0,381	546,6385	0,17	0,076206897
Other General Industrial Equipment	2018	51	120	Other General Industrial Equipment_2018_120	0,663253	0,557	3,87633	4,95455	0,005	0,392	0,36	488,2775	0,152	0,068137931
Other General Industrial Equipment	2018	121	175	Other General Industrial Equipment_2018_175	0,377931	0,318	3,23662	3,23673	0,005	0,172	0,158	490,1999	0,153	0,068586207
Other General Industrial Equipment	2018	176	250	Other General Industrial Equipment_2018_250	0,360768	0,303	1,45525	3,64819	0,005	0,135	0,124	491,6263	0,153	0,068586207
Other General Industrial Equipment	2018	251	500	Other General Industrial Equipment_2018_500	0,301755	0,254	1,58301	2,90735	0,005	0,104	0,095	491,3207	0,153	0,068586207
Other General Industrial Equipment	2018	501	750	Other General Industrial Equipment_2018_750	0,257602	0,216	1,48303	2,41933	0,005	0,083	0,076	491,8763	0,153	0,068586207
Other General Industrial Equipment	2018	751	1000	Other General Industrial Equipment_2018_1000	0,306245	0,257	1,06646	4,81007	0,005	0,116	0,107	490,4122	0,153	0,068586207
Other General Industrial Equipment	2019	6	15	Other General Industrial Equipment_2019_15	1,240314	1,042	5,66186	4,80683	0,005	0,374	0,344	537,8689	0,17	0,076206897
Other General Industrial Equipment	2019	16	25	Other General Industrial Equipment_2019_25	1,240314	1,042	5,66186	4,80683	0,005	0,374	0,344	537,8689	0,17	0,076206897
Other General Industrial Equipment	2019	26	50	Other General Industrial Equipment_2019_50	1,240314	1,042	5,66186	4,80683	0,005	0,374	0,344	537,8689	0,17	0,076206897
Other General Industrial Equipment	2019	51	120	Other General Industrial Equipment_2019_120	0,594634	0,5	3,82128	4,49674	0,005	0,343	0,315	480,4442	0,152	0,068137931
Other General Industrial Equipment	2019	121	175	Other General Industrial Equipment_2019_175	0,359068	0,302	3,24129	2,99891	0,005	0,156	0,144	482,3357	0,153	0,068586207
Other General Industrial Equipment	2019	176	250	Other General Industrial Equipment_2019_250	0,307665	0,259	1,29893	3,01996	0,005	0,106	0,097	483,7392	0,153	0,068586207
Other General Industrial Equipment	2019	251	500	Other General Industrial Equipment_2019_500	0,283854	0,239	1,56115	2,57531	0,005	0,092	0,085	483,4385	0,153	0,068586207
Other General Industrial Equipment	2019	501	750	Other General Industrial Equipment_2019_750	0,236758	0,199	1,47441	2,11518	0,005	0,076	0,07	483,9852	0,153	0,068586207
Other General Industrial Equipment	2019	751	1000	Other General Industrial Equipment_2019_1000	0,31421	0,264	1,07573	4,83364	0,005	0,117	0,108	482,5446	0,153	0,068586207
Other General Industrial Equipment	2020	6	15	Other General Industrial Equipment_2020_15	1,125869	0,946	5,50397	4,62219	0,005	0,334	0,307	526,1761	0,17	0,076206897
Other General Industrial Equipment	2020	16	25	Other General Industrial Equipment_2020_25	1,125869	0,946	5,50397	4,62219	0,005	0,334	0,307	526,1761	0,17	0,076206897
Other General Industrial Equipment	2020	26	50	Other General Industrial Equipment_2020_50	1,125869	0,946	5,50397	4,62219	0,005	0,334	0,307	526,1761	0,17	0,076206897
Other General Industrial Equipment	2020	51	120	Other General Industrial Equipment_2020_120	0,53075	0,446	3,77073	4,06079	0,005	0,296	0,272	469,9998	0,152	0,068137931
Other General Industrial Equipment	2020	121	175	Other General Industrial Equipment_2020_175	0,319281	0,268	3,22922	2,57503	0,005	0,135	0,124	471,8502	0,153	0,068586207
Other General Industrial Equipment	2020	176	250	Other General Industrial Equipment_2020_250	0,281815	0,237	1,23914	2,66782	0,005	0,09	0,083	473,2231	0,153	0,068586207
Other General Industrial Equipment	2020	251	500	Other General Industrial Equipment_2020_500	0,247036	0,208	1,34424	2,06187	0,005	0,072	0,067	472,929	0,153	0,068586207
Other General Industrial Equipment	2020	501	750	Other General Industrial Equipment_2020_750	0,207847	0,175	1,46184	1,67591	0,005	0,062	0,057	473,4638	0,153	0,068586207
Other General Industrial Equipment	2020	751	1000	Other General Industrial Equipment_2020_1000	0,322174	0,271	1,085	4,85721	0,005	0,119	0,109	472,0545	0,153	0,068586207
Other General Industrial Equipment	2021	6	15	Other General Industrial Equipment_2021_15	0,989462	0,831	5,31354	4,42532	0,005	0,289	0,266	526,1761	0,17	0,076206897
Other General Industrial Equipment	2021	16	25	Other General Industrial Equipment_2021_25	0,989462	0,831	5,31354	4,42532	0,005	0,289	0,266	526,1761	0,17	0,076206897
Other General Industrial Equipment	2021	26	50	Other General Industrial Equipment_2021_50	0,989462	0,831	5,31354	4,42532	0,005	0,289	0,266	526,1761	0,17	0,076206897
Other General Industrial Equipment	2021	51	120	Other General Industrial Equipment_2021_120	0,480398	0,404	3,74029	3,7177	0,005	0,256	0,235	469,9998	0,152	0,068137931
Other General Industrial Equipment	2021	121	175	Other General Industrial Equipment_2021_175	0,302394	0,254	3,23421	2,34745	0,005	0,121	0,111	471,8502	0,153	0,068586207
Other General Industrial Equipment	2021	176	250	Other General Industrial Equipment_2021_250	0,242448	0,204	1,17138	2,0939	0,005	0,07	0,064	473,2231	0,153	0,068586207
Other General Industrial Equipment	2021	251	500	Other General Industrial Equipment_2021_500	0,232592	0,195	1,32956	1,79624	0,005	0,064	0,059	472,929	0,153	0,068586207
Other General Industrial Equipment	2021	501	750	Other General Industrial Equipment_2021_750	0,197551	0,166	1,46305	1,38672	0,005	0,054	0,05	473,4638	0,153	0,068586207
Other General Industrial Equipment	2021	751	1000	Other General Industrial Equipment_2021_1000	0,328625	0,276	1,09291	4,87557	0,005	0,12	0,11	472,0545	0,153	0,068586207
Other General Industrial Equipment	2022	6	15	Other General Industrial Equipment_2022_15	0,835231	0,702	5,07591	4,19687	0,005	0,238	0,219	526,1761	0,17	0,076206897
Other General Industrial Equipment	2022	16	25	Other General Industrial Equipment_2022_25	0,835231	0,702	5,07591	4,19687	0,005	0,238	0,219	526,1761	0,17	0,076206897
Other General Industrial Equipment	2022	26	50	Other General Industrial Equipment_2022_50	0,835231	0,702	5,07591	4,19687	0,005	0,238	0,219	526,1761	0,17	0,076206897
Other General Industrial Equipment	2022	51	120	Other General Industrial Equipment_2022_120	0,403101	0,339	3,66821	3,19968	0,005	0,199	0,183	469,9998	0,152	0,068137931
Other General Industrial Equipment	2022	121	175	Other General Industrial Equipment_2022_175	0,289798	0,244	3,23346	2,14959	0,005	0,111	0,102	471,8502	0,153	0,068586207
Other General Industrial Equipment	2022	176	250	Other General Industrial Equipment_2022_250	0,222216	0,187	1,13752	1,75874	0,005	0,057	0,052	473,2231	0,153	0,068586207
Other General Industrial Equipment	2022	251	500	Other General Industrial Equipment_2022_500	0,208015	0,175	1,17139	1,43348	0,005	0,05	0,046	472,929	0,153	0,068586207
Other General Industrial Equipment	2022	501	750	Other General Industrial Equipment_2022_750	0,177285	0,149	1,45658	1,06247	0,005	0,046	0,042	473,4638	0,153	0,068586207
Other General Industrial Equipment	2022	751	1000	Other General Industrial Equipment_2022_1000	0,223076	0,187	1,03925	3,942	0,005	0,079	0,073	472,0545	0,153	0,068586207
Other General Industrial Equipment	2023	6	15	Other General Industrial Equipment_2023_15	0,717857	0,603	4,88317	3,99304	0,005	0,194	0,178	526,1761	0,17	0,076206897
Other General Industrial Equipment	2023	16	25	Other General Industrial Equipment_2023_25	0,717857	0,603	4,88317	3,99304	0,005	0,194	0,178	526,1761	0,17	0,076206897

Other General Industrial Equipment	2023	26	50	Other General Industrial Equipment_2023_50	0,717857	0,603	4,88317	3,99304	0,005	0,194	0,178	526,1761	0,17	0,076206897
Other General Industrial Equipment	2023	51	120	Other General Industrial Equipment_2023_120	0,366077	0,308	3,64703	2,92394	0,005	0,168	0,155	469,9998	0,152	0,068137931
Other General Industrial Equipment	2023	121	175	Other General Industrial Equipment_2023_175	0,238568	0,2	3,17453	1,60937	0,005	0,08	0,074	471,8502	0,153	0,068586207
Other General Industrial Equipment	2023	176	250	Other General Industrial Equipment_2023_250	0,214876	0,181	1,14024	1,53043	0,005	0,051	0,047	473,2231	0,153	0,068586207
Other General Industrial Equipment	2023	251	500	Other General Industrial Equipment_2023_500	0,195172	0,164	1,12057	1,25618	0,005	0,043	0,04	472,929	0,153	0,068586207
Other General Industrial Equipment	2023	501	750	Other General Industrial Equipment_2023_750	0,131565	0,111	1,10458	0,62571	0,005	0,023	0,021	473,4638	0,153	0,068586207
Other General Industrial Equipment	2023	751	1000	Other General Industrial Equipment_2023_1000	0,229255	0,193	1,04852	3,95649	0,005	0,08	0,073	472,0545	0,153	0,068586207
Other General Industrial Equipment	2024	6	15	Other General Industrial Equipment_2024_15	0,649743	0,546	4,78022	3,85892	0,005	0,165	0,152	526,1761	0,17	0,076206897
Other General Industrial Equipment	2024	16	25	Other General Industrial Equipment_2024_25	0,649743	0,546	4,78022	3,85892	0,005	0,165	0,152	526,1761	0,17	0,076206897
Other General Industrial Equipment	2024	26	50	Other General Industrial Equipment_2024_50	0,649743	0,546	4,78022	3,85892	0,005	0,165	0,152	526,1761	0,17	0,076206897
Other General Industrial Equipment	2024	51	120	Other General Industrial Equipment_2024_120	0,341745	0,287	3,63929	2,70778	0,005	0,146	0,134	469,9998	0,152	0,068137931
Other General Industrial Equipment	2024	121	175	Other General Industrial Equipment_2024_175	0,226791	0,191	3,18534	1,44774	0,005	0,073	0,067	471,8502	0,153	0,068586207
Other General Industrial Equipment	2024	176	250	Other General Industrial Equipment_2024_250	0,205547	0,173	1,14124	1,31888	0,005	0,046	0,042	473,2231	0,153	0,068586207
Other General Industrial Equipment	2024	251	500	Other General Industrial Equipment_2024_500	0,187509	0,158	1,1102	1,15288	0,005	0,04	0,036	472,929	0,153	0,068586207
Other General Industrial Equipment	2024	501	750	Other General Industrial Equipment_2024_750	0,137014	0,115	1,11228	0,62782	0,005	0,023	0,021	473,4638	0,153	0,068586207
Other General Industrial Equipment	2024	751	1000	Other General Industrial Equipment_2024_1000	0,235434	0,198	1,05779	3,97098	0,005	0,08	0,074	472,0545	0,153	0,068586207
Other General Industrial Equipment	2025	6	15	Other General Industrial Equipment_2025_15	0,585572	0,492	4,67981	3,71721	0,005	0,136	0,125	526,1761	0,17	0,076206897
Other General Industrial Equipment	2025	16	25	Other General Industrial Equipment_2025_25	0,585572	0,492	4,67981	3,71721	0,005	0,136	0,125	526,1761	0,17	0,076206897
Other General Industrial Equipment	2025	26	50	Other General Industrial Equipment_2025_50	0,585572	0,492	4,67981	3,71721	0,005	0,136	0,125	526,1761	0,17	0,076206897
Other General Industrial Equipment	2025	51	120	Other General Industrial Equipment_2025_120	0,306396	0,257	3,61204	2,43889	0,005	0,118	0,109	469,9998	0,152	0,068137931
Other General Industrial Equipment	2025	121	175	Other General Industrial Equipment_2025_175	0,224974	0,189	3,20434	1,36379	0,005	0,07	0,065	471,8502	0,153	0,068586207
Other General Industrial Equipment	2025	176	250	Other General Industrial Equipment_2025_250	0,184121	0,155	1,13176	1,02801	0,005	0,036	0,033	473,2231	0,153	0,068586207
Other General Industrial Equipment	2025	251	500	Other General Industrial Equipment_2025_500	0,180295	0,151	1,10932	1,05334	0,005	0,035	0,032	472,929	0,153	0,068586207
Other General Industrial Equipment	2025	501	750	Other General Industrial Equipment_2025_750	0,139282	0,117	1,1152	0,629	0,005	0,023	0,021	473,4638	0,153	0,068586207
Other General Industrial Equipment	2025	751	1000	Other General Industrial Equipment_2025_1000	0,241613	0,203	1,06706	3,98546	0,005	0,081	0,074	472,0545	0,153	0,068586207
Other General Industrial Equipment	2030	6	15	Other General Industrial Equipment_2030_15	1,393	0,589	3,469	4,142	0,008	0,161	0,161	568,299	0,053	0,023758621
Other General Industrial Equipment	2030	16	25	Other General Industrial Equipment_2030_25	3,889	0,685	2,339	4,332	0,007	0,161	0,161	568,299	0,061	0,027344828
Other General Industrial Equipment	2030	26	50	Other General Industrial Equipment_2030_50	4,896	0,609	5,299	3,46	0,007	0,048	0,048	568,299	0,054	0,024206897
Other General Industrial Equipment	2030	51	120	Other General Industrial Equipment_2030_120	7,091	0,309	3,802	1,766	0,006	0,043	0,043	568,299	0,027	0,012103448
Other General Industrial Equipment	2030	121	175	Other General Industrial Equipment_2030_175	7,93	0,223	3,357	0,641	0,006	0,028	0,028	568,299	0,02	0,008965517
Other General Industrial Equipment	2030	176	250	Other General Industrial Equipment_2030_250	10,485	0,209	1,143	0,536	0,006	0,018	0,018	568,299	0,018	0,008068966
Other General Industrial Equipment	2030	251	500	Other General Industrial Equipment_2030_500	20,447	0,208	1,087	0,506	0,005	0,018	0,018	568,299	0,018	0,008068966
Other General Industrial Equipment	2030	501	750	Other General Industrial Equipment_2030_750	33,725	0,208	1,087	0,512	0,005	0,018	0,018	568,299	0,018	0,008068966
Other General Industrial Equipment	2030	751	1000	Other General Industrial Equipment_2030_1000	44,002	0,212	1,088	2,66	0,005	0,035	0,035	568,299	0,019	0,008517241
Other General Industrial Equipment	2035	6	15	Other General Industrial Equipment_2035_15	1,393	0,589	3,469	4,142	0,008	0,161	0,161	568,299	0,053	0,023758621
Other General Industrial Equipment	2035	16	25	Other General Industrial Equipment_2035_25	3,889	0,685	2,339	4,332	0,007	0,161	0,161	568,299	0,061	0,027344828
Other General Industrial Equipment	2035	26	50	Other General Industrial Equipment_2035_50	4,535	0,564	5,255	3,334	0,007	0,025	0,025	568,299	0,05	0,022413793
Other General Industrial Equipment	2035	51	120	Other General Industrial Equipment_2035_120	6,486	0,282	3,794	1,567	0,006	0,022	0,022	568,3	0,025	0,011206897
Other General Industrial Equipment	2035	121	175	Other General Industrial Equipment_2035_175	7,079	0,199	3,355	0,399	0,006	0,016	0,016	568,3	0,018	0,008068966
Other General Industrial Equipment	2035	176	250	Other General Industrial Equipment_2035_250	9,803	0,195	1,143	0,355	0,006	0,013	0,013	568,299	0,017	0,00762069
Other General Industrial Equipment	2035	251	500	Other General Industrial Equipment_2035_500	19,187	0,195	1,087	0,351	0,005	0,013	0,013	568,299	0,017	0,00762069
Other General Industrial Equipment	2035	501	750	Other General Industrial Equipment_2035_750	31,624	0,195	1,087	0,351	0,005	0,013	0,013	568,299	0,017	0,00762069
Other General Industrial Equipment	2035	751	1000	Other General Industrial Equipment_2035_1000	40,723	0,196	1,087	2,532	0,005	0,028	0,028	568,299	0,017	0,00762069
Other General Industrial Equipment	2040	6	15	Other General Industrial Equipment_2040_15	1,393	0,589	3,47	4,142	0,008	0,161	0,161	568,299	0,053	0,023758621
Other General Industrial Equipment	2040	16	25	Other General Industrial Equipment_2040_25	3,889	0,685	2,339	4,332	0,007	0,161	0,161	568,299	0,061	0,027344828
Other General Industrial Equipment	2040	26	50	Other General Industrial Equipment_2040_50	4,521	0,562	5,257	3,283	0,007	0,019	0,019	568,299	0,05	0,022413793
Other General Industrial Equipment	2040	51	120	Other General Industrial Equipment_2040_120	6,373	0,277	3,794	1,506	0,006	0,017	0,017	568,299	0,025	0,011206897
Other General Industrial Equipment	2040	121	175	Other General Industrial Equipment_2040_175	6,806	0,191	3,356	0,315	0,006	0,012	0,012	568,299	0,017	0,00762069
Other General Industrial Equipment	2040	176	250	Other General Industrial Equipment_2040_250	9,551	0,19	1,143	0,299	0,006	0,011	0,011	568,299	0,017	0,00762069
Other General Industrial Equipment	2040	251	500	Other General Industrial Equipment_2040_500	18,696	0,19	1,087	0,299	0,005	0,011	0,011	568,299	0,017	0,00762069
Other General Industrial Equipment	2040	501	750	Other General Industrial Equipment_2040_750	30,815	0,19	1,087	0,299	0,005	0,011	0,011	568,299	0,017	0,00762069
Other General Industrial Equipment	2040	751	1000	Other General Industrial Equipment_2040_1000	39,521	0,191	1,087	2,5	0,005	0,025	0,025	568,299	0,017	0,00762069
Other Material Handling Equipment	1990	26	50	Other Material Handling Equipment_1990_50	12,278	4,763	9,649	7,932	0,692	1,252	1,252	568,3	0,429	0,192310345
Other Material Handling Equipment	1990	51	120	Other Material Handling Equipment_1990_120	12,096	2,346	5,692	14,896	0,628	1,317	1,317	568,299	0,211	0,094586207
Other Material Handling Equipment	1990	121	175	Other Material Handling Equipment_1990_175	16,59	1,599	5,041	13,377	0,602	0,872	0,872	568,299	0,144	0,064551724
Other Material Handling Equipment	1990	176	250	Other Material Handling Equipment_1990_250	19,708	1,599	5,041	13,377	0,602	0,872	0,872	568,3	0,144	0,064551724
Other Material Handling Equipment	1990	251	500	Other Material Handling Equipment_1990_500	23,083	1,417	11,046	12,702	0,525	0,75	0,75	568,299	0,127	0,056931034
Other Material Handling Equipment	1990	1001	9999	Other Material Handling Equipment_1990_9999	88,844	1,41	11,046	12,702	0,525	0,741	0,741	568,3	0,127	0,056931034
Other Material Handling Equipment	2000	26	50	Other Material Handling Equipment_2000_50	11,414	4,428	9,121	7,068	0,065	0,925	0,925	568,299	0,399	0,178862069
Other Material Handling Equipment	2000	51	120	Other Material Handling Equipment_2000_120	9,647	1,871	4,712	10,623	0,059	0,901	0,901	568,299	0,168	0,075310345
Other Material Handling Equipment	2000	121	175	Other Material Handling Equipment_2000_175	13	1,253	3,836	9,648	0,057	0,531	0,531	568,299	0,113	0,050655172
Other Material Handling Equipment	2000	176	250	Other Material Handling Equipment_2000_250	12,957	1,051	3,061	9,289	0,057	0,435	0,435	568,3	0,094	0,042137931
Other Material Handling Equipment	2000	251	500	Other Material Handling Equipment_2000_500	15,5	0,951	5,171	8,836	0,049	0,383	0,383	568,299	0,085	0,038103448
Other Material Handling Equipment	2000	1001	9999	Other Material Handling Equipment_2000_9999	65,006	1,031	5,779	9,45	0,049	0,384	0,384	568,299	0,093	0,041689655
Other Material Handling Equipment	2005	26	50	Other Material Handling Equipment_2005_50	10,467	4,06	8,646	6,65	0,065	0,878	0,878	568,299	0,366	0,164068966
Other Material Handling Equipment	2005	51	120	Other Material Handling Equipment_2005_120	8,426	1,634	4,393	9,001	0,059	0,857	0,857	568,3	0,147	0,065896552
Other Material Handling Equipment	2005	121	175	Other Material Handling Equipment_2005_175	11,141	1,073	3,493	8,235	0,057	0,473	0,473	568,299	0,096	0,043034483
Other Material Handling Equipment	2005	176	250	Other Material Handling Equipment_2005_250	9,335	0,757	2,058	7,76	0,057	0,299	0,299	568,299	0,068	0,030482759
Other Material Handling Equipment	2005	251	500	Other Material Handling Equipment_2005_500	10,914	0,67	2,676	7,071	0,049	0,268	0,268	568,299	0,06	0,026896552
Other Material Handling Equipment	2005	1001	9999	Other Material Handling Equipment_2005_9999	50,601	0,803	3,267	8,291	0,049	0,278	0,278	568,299	0,072	0,032275862
Other Material Handling Equipment	2010	26	50	Other Material Handling Equipment_2010_50	2,513226	2,112	7,14242	6,11921	0,005	0,673	0,619	581,8987	0,169	0,075758621
Other Material Handling Equipment	2010	51	120	Other Material Handling Equipment_2010_120	0,880333	0,74	3,91836	6,86036	0,005	0,55	0,506	526,2094	0,153	0,068586207
Other Material Handling Equipment	2010	121	175	Other Material Handling Equipment_2010_175	0,703937	0,592	3,45939	6,62945	0,005	0,364	0,335	524,6881	0,153	0,068586207

Other Material Handling Equipment	2010	176	250	Other Material Handling Equipment_2010_250	0,639111	0,537	2,2178	7,05748	0,005	0,292	0,269	523,8689	0,152	0,068137931
Other Material Handling Equipment	2010	251	500	Other Material Handling Equipment_2010_500	0,474577	0,399	2,89546	5,53948	0,005	0,225	0,207	522,5525	0,152	0,068137931
Other Material Handling Equipment	2010	1001	9999	Other Material Handling Equipment_2010_9999	0,19342	0,163	0,96514	4,31467	0,005	0,1	0,092	524,505	0,153	0,068586207
Other Material Handling Equipment	2011	26	50	Other Material Handling Equipment_2011_50	2,357707	1,981	6,95209	6,0264	0,005	0,644	0,593	580,4439	0,169	0,075758621
Other Material Handling Equipment	2011	51	120	Other Material Handling Equipment_2011_120	0,835489	0,702	3,89742	6,54765	0,005	0,527	0,485	524,8938	0,153	0,068586207
Other Material Handling Equipment	2011	121	175	Other Material Handling Equipment_2011_175	0,695125	0,584	3,45599	6,48588	0,005	0,36	0,331	523,3764	0,153	0,068586207
Other Material Handling Equipment	2011	176	250	Other Material Handling Equipment_2011_250	0,63663	0,535	2,18416	6,98965	0,005	0,288	0,265	522,5592	0,152	0,068137931
Other Material Handling Equipment	2011	251	500	Other Material Handling Equipment_2011_500	0,474482	0,399	2,78574	5,43165	0,005	0,221	0,203	521,2461	0,152	0,068137931
Other Material Handling Equipment	2011	1001	9999	Other Material Handling Equipment_2011_9999	0,210247	0,177	0,97804	4,35542	0,005	0,103	0,095	523,1938	0,153	0,068586207
Other Material Handling Equipment	2012	26	50	Other Material Handling Equipment_2012_50	2,238738	1,881	6,81597	5,92499	0,005	0,62	0,57	578,9892	0,169	0,075758621
Other Material Handling Equipment	2012	51	120	Other Material Handling Equipment_2012_120	0,817068	0,687	3,90414	6,36758	0,005	0,516	0,475	523,5783	0,153	0,068586207
Other Material Handling Equipment	2012	121	175	Other Material Handling Equipment_2012_175	0,692769	0,582	3,47827	6,40913	0,005	0,357	0,328	522,0647	0,153	0,068586207
Other Material Handling Equipment	2012	176	250	Other Material Handling Equipment_2012_250	0,646463	0,543	2,19514	7,02565	0,005	0,29	0,267	521,2496	0,152	0,068137931
Other Material Handling Equipment	2012	251	500	Other Material Handling Equipment_2012_500	0,470349	0,395	2,61135	5,30246	0,005	0,214	0,197	519,9397	0,152	0,068137931
Other Material Handling Equipment	2012	1001	9999	Other Material Handling Equipment_2012_9999	0,227073	0,191	0,99094	4,39617	0,005	0,106	0,098	521,8825	0,153	0,068586207
Other Material Handling Equipment	2013	26	50	Other Material Handling Equipment_2013_50	2,105942	1,77	6,66457	5,85572	0,005	0,596	0,548	576,0797	0,169	0,075758621
Other Material Handling Equipment	2013	51	120	Other Material Handling Equipment_2013_120	0,724086	0,608	3,82317	5,76277	0,005	0,447	0,411	520,9473	0,153	0,068586207
Other Material Handling Equipment	2013	121	175	Other Material Handling Equipment_2013_175	0,665996	0,56	3,43613	6,15356	0,005	0,333	0,306	519,4412	0,153	0,068586207
Other Material Handling Equipment	2013	176	250	Other Material Handling Equipment_2013_250	0,634565	0,533	2,16882	6,82184	0,005	0,281	0,259	518,6302	0,152	0,068137931
Other Material Handling Equipment	2013	251	500	Other Material Handling Equipment_2013_500	0,438071	0,368	2,33558	4,87099	0,005	0,195	0,179	517,327	0,152	0,068137931
Other Material Handling Equipment	2013	1001	9999	Other Material Handling Equipment_2013_9999	0,2439	0,205	1,00384	4,43692	0,005	0,11	0,101	519,26	0,153	0,068586207
Other Material Handling Equipment	2014	26	50	Other Material Handling Equipment_2014_50	2,017454	1,695	6,58988	5,75119	0,005	0,575	0,529	573,1702	0,169	0,075758621
Other Material Handling Equipment	2014	51	120	Other Material Handling Equipment_2014_120	0,66398	0,558	3,77914	5,37202	0,005	0,412	0,379	518,3162	0,153	0,068586207
Other Material Handling Equipment	2014	121	175	Other Material Handling Equipment_2014_175	0,628738	0,528	3,43064	5,79759	0,005	0,313	0,288	516,8178	0,153	0,068586207
Other Material Handling Equipment	2014	176	250	Other Material Handling Equipment_2014_250	0,565441	0,475	1,93605	6,17254	0,005	0,242	0,223	516,0109	0,152	0,068137931
Other Material Handling Equipment	2014	251	500	Other Material Handling Equipment_2014_500	0,394393	0,331	1,92674	4,35658	0,005	0,169	0,155	514,7142	0,152	0,068137931
Other Material Handling Equipment	2014	1001	9999	Other Material Handling Equipment_2014_9999	0,168044	0,141	0,97804	3,4363	0,005	0,066	0,061	516,6375	0,153	0,068586207
Other Material Handling Equipment	2015	26	50	Other Material Handling Equipment_2015_50	2,062891	1,733	6,75642	5,7994	0,005	0,586	0,539	567,3512	0,169	0,075758621
Other Material Handling Equipment	2015	51	120	Other Material Handling Equipment_2015_120	0,628094	0,528	3,75787	4,98312	0,005	0,383	0,352	513,0541	0,153	0,068586207
Other Material Handling Equipment	2015	121	175	Other Material Handling Equipment_2015_175	0,624881	0,525	3,43301	5,6445	0,005	0,306	0,282	511,5709	0,153	0,068586207
Other Material Handling Equipment	2015	176	250	Other Material Handling Equipment_2015_250	0,503855	0,423	1,74236	5,5323	0,005	0,207	0,191	510,7722	0,152	0,068137931
Other Material Handling Equipment	2015	251	500	Other Material Handling Equipment_2015_500	0,396328	0,333	1,91761	4,27243	0,005	0,166	0,152	509,4887	0,152	0,068137931
Other Material Handling Equipment	2015	1001	9999	Other Material Handling Equipment_2015_9999	0,1762	0,148	0,98449	3,45753	0,005	0,068	0,063	511,3924	0,153	0,068586207
Other Material Handling Equipment	2016	26	50	Other Material Handling Equipment_2016_50	2,100647	1,765	6,89161	5,80157	0,005	0,593	0,546	561,5322	0,169	0,075758621
Other Material Handling Equipment	2016	51	120	Other Material Handling Equipment_2016_120	0,611519	0,514	3,76606	4,79843	0,005	0,367	0,338	507,792	0,153	0,068586207
Other Material Handling Equipment	2016	121	175	Other Material Handling Equipment_2016_175	0,581687	0,489	3,41823	5,21152	0,005	0,279	0,257	506,324	0,153	0,068586207
Other Material Handling Equipment	2016	176	250	Other Material Handling Equipment_2016_250	0,474176	0,398	1,64277	5,19629	0,005	0,189	0,174	505,5335	0,152	0,068137931
Other Material Handling Equipment	2016	251	500	Other Material Handling Equipment_2016_500	0,384009	0,323	1,87077	4,05322	0,005	0,156	0,143	504,2631	0,152	0,068137931
Other Material Handling Equipment	2016	1001	9999	Other Material Handling Equipment_2016_9999	0,188654	0,159	0,99739	3,48884	0,005	0,07	0,065	506,1474	0,153	0,068586207
Other Material Handling Equipment	2017	26	50	Other Material Handling Equipment_2017_50	1,922269	1,615	6,63527	5,57447	0,005	0,546	0,502	552,8037	0,169	0,075758621
Other Material Handling Equipment	2017	51	120	Other Material Handling Equipment_2017_120	0,580499	0,488	3,75788	4,56113	0,005	0,341	0,314	499,8989	0,153	0,068586207
Other Material Handling Equipment	2017	121	175	Other Material Handling Equipment_2017_175	0,508007	0,427	3,35117	4,48809	0,005	0,238	0,219	498,4537	0,153	0,068586207
Other Material Handling Equipment	2017	176	250	Other Material Handling Equipment_2017_250	0,42771	0,359	1,51249	4,70454	0,005	0,163	0,15	497,6755	0,152	0,068137931
Other Material Handling Equipment	2017	251	500	Other Material Handling Equipment_2017_500	0,386945	0,325	1,86256	3,9709	0,005	0,154	0,141	496,4249	0,152	0,068137931
Other Material Handling Equipment	2017	1001	9999	Other Material Handling Equipment_2017_9999	0,201109	0,169	1,01029	3,52015	0,005	0,072	0,066	498,2798	0,153	0,068586207
Other Material Handling Equipment	2018	26	50	Other Material Handling Equipment_2018_50	1,534491	1,289	6,06083	5,18225	0,005	0,457	0,42	544,0753	0,169	0,075758621
Other Material Handling Equipment	2018	51	120	Other Material Handling Equipment_2018_120	0,484553	0,407	3,67482	3,9436	0,005	0,271	0,249	492,0058	0,153	0,068586207
Other Material Handling Equipment	2018	121	175	Other Material Handling Equipment_2018_175	0,38852	0,326	3,21803	3,33231	0,005	0,173	0,159	490,5834	0,153	0,068586207
Other Material Handling Equipment	2018	176	250	Other Material Handling Equipment_2018_250	0,376195	0,316	1,3884	4,09187	0,005	0,135	0,124	489,8174	0,152	0,068137931
Other Material Handling Equipment	2018	251	500	Other Material Handling Equipment_2018_500	0,352182	0,296	1,63271	3,52439	0,005	0,133	0,123	488,5866	0,152	0,068137931
Other Material Handling Equipment	2018	1001	9999	Other Material Handling Equipment_2018_9999	0,213564	0,179	1,02319	3,55146	0,005	0,074	0,068	490,4122	0,153	0,068586207
Other Material Handling Equipment	2019	26	50	Other Material Handling Equipment_2019_50	1,5177	1,275	6,13945	5,17904	0,005	0,452	0,416	535,3468	0,169	0,075758621
Other Material Handling Equipment	2019	51	120	Other Material Handling Equipment_2019_120	0,428699	0,36	3,63634	3,56573	0,005	0,231	0,212	484,1126	0,153	0,068586207
Other Material Handling Equipment	2019	121	175	Other Material Handling Equipment_2019_175	0,332757	0,28	3,1852	2,77369	0,005	0,139	0,128	482,7131	0,153	0,068586207
Other Material Handling Equipment	2019	176	250	Other Material Handling Equipment_2019_250	0,357063	0,3	1,34052	3,81716	0,005	0,123	0,113	481,9594	0,152	0,068137931
Other Material Handling Equipment	2019	251	500	Other Material Handling Equipment_2019_500	0,346245	0,291	1,61951	3,37078	0,005	0,128	0,118	480,7483	0,152	0,068137931
Other Material Handling Equipment	2019	1001	9999	Other Material Handling Equipment_2019_9999	0,226018	0,19	1,03609	3,58277	0,005	0,076	0,07	482,5446	0,153	0,068586207
Other Material Handling Equipment	2020	26	50	Other Material Handling Equipment_2020_50	1,481858	1,245	6,1671	5,13925	0,005	0,439	0,404	523,7088	0,169	0,075758621
Other Material Handling Equipment	2020	51	120	Other Material Handling Equipment_2020_120	0,36479	0,307	3,58938	3,10396	0,005	0,182	0,168	473,5884	0,153	0,068586207
Other Material Handling Equipment	2020	121	175	Other Material Handling Equipment_2020_175	0,299922	0,252	3,17089	2,36653	0,005	0,118	0,109	472,2193	0,153	0,068586207
Other Material Handling Equipment	2020	176	250	Other Material Handling Equipment_2020_250	0,346024	0,291	1,31882	3,59889	0,005	0,115	0,106	471,482	0,152	0,068137931
Other Material Handling Equipment	2020	251	500	Other Material Handling Equipment_2020_500	0,336187	0,282	1,52346	3,20974	0,005	0,12	0,11	470,2972	0,152	0,068137931
Other Material Handling Equipment	2020	1001	9999	Other Material Handling Equipment_2020_9999	0,238473	0,2	1,04898	3,61407	0,005	0,078	0,072	472,0545	0,153	0,068586207
Other Material Handling Equipment	2021	26	50	Other Material Handling Equipment_2021_50	1,318509	1,108	5,95956	4,96638	0,005	0,396	0,364	523,7088	0,169	0,075758621
Other Material Handling Equipment	2021	51	120	Other Material Handling Equipment_2021_120	0,349969	0,294	3,60203	2,95622	0,005	0,166	0,152	473,5884	0,153	0,068586207
Other Material Handling Equipment	2021	121	175	Other Material Handling Equipment_2021_175	0,296084	0,249	3,19638	2,24633	0,005	0,114	0,105	472,2193	0,153	0,068586207
Other Material Handling Equipment	2021	176	250	Other Material Handling Equipment_2021_250	0,32063	0,269	1,30911	3,08193	0,005	0,102	0,094	471,482	0,152	0,068137931
Other Material Handling Equipment	2021	251	500	Other Material Handling Equipment_2021_500	0,302407	0,254	1,44188	2,60166	0,005	0,101	0,093	470,2972	0,152	0,068137931
Other Material Handling Equipment	2021	1001	9999	Other Material Handling Equipment_2021_9999	0,086228	0,072	0,97159	2,3179	0,005	0,019	0,018	472,0545	0,153	0,068586207
Other Material Handling Equipment	2022	26	50	Other Material Handling Equipment_2022_50	1,313129	1,103	5,98386	4,92048	0,005	0,385	0,354	523,7088	0,169	0,075758621
Other Material Handling Equipment	2022	51	120	Other Material Handling Equipment_2022_120	0,294157	0,247	3,55673	2,56673	0,005	0,121	0,111	473,5884	0,153	0,068586207
Other Material Handling Equipment	2022	121	175	Other Material Handling Equipment_2022_175	0,268495	0,226	3,17607	1,89383	0,005	0,103	0,095	472,2193	0,153	0,068586207
Other Material Handling Equipment	2022	176	250	Other Material Handling Equipment_2022_250	0,272302	0,229	1,23917	2,42542	0,005	0,083	0,076	471,482	0,152	0,068137931

Other Material Handling Equipment	2022	251	500	Other Material Handling Equipment_2022_500	0,269417	0,226	1,34592	2,06254	0,005	0,083	0,077	470,2972	0,152	0,068137931
Other Material Handling Equipment	2022	1001	9999	Other Material Handling Equipment_2022_9999	0,090526	0,076	0,97804	2,32798	0,005	0,02	0,018	472,0545	0,153	0,068586207
Other Material Handling Equipment	2023	26	50	Other Material Handling Equipment_2023_50	1,203044	1,011	5,75727	4,68435	0,005	0,34	0,313	523,7088	0,169	0,075758621
Other Material Handling Equipment	2023	51	120	Other Material Handling Equipment_2023_120	0,267491	0,225	3,51535	2,29768	0,005	0,104	0,095	473,5884	0,153	0,068586207
Other Material Handling Equipment	2023	121	175	Other Material Handling Equipment_2023_175	0,25813	0,217	3,17066	1,76898	0,005	0,096	0,088	472,2193	0,153	0,068586207
Other Material Handling Equipment	2023	176	250	Other Material Handling Equipment_2023_250	0,246291	0,207	1,20917	2,00366	0,005	0,069	0,064	471,482	0,152	0,068137931
Other Material Handling Equipment	2023	251	500	Other Material Handling Equipment_2023_500	0,258837	0,217	1,34382	1,87023	0,005	0,078	0,072	470,2972	0,152	0,068137931
Other Material Handling Equipment	2023	1001	9999	Other Material Handling Equipment_2023_9999	0,064735	0,054	0,93935	2,26751	0,005	0,018	0,017	472,0545	0,153	0,068586207
Other Material Handling Equipment	2024	26	50	Other Material Handling Equipment_2024_50	1,121754	0,943	5,6693	4,5789	0,005	0,314	0,289	523,7088	0,169	0,075758621
Other Material Handling Equipment	2024	51	120	Other Material Handling Equipment_2024_120	0,262084	0,22	3,51036	2,22162	0,005	0,096	0,089	473,5884	0,153	0,068586207
Other Material Handling Equipment	2024	121	175	Other Material Handling Equipment_2024_175	0,247908	0,208	3,18111	1,63864	0,005	0,088	0,081	472,2193	0,153	0,068586207
Other Material Handling Equipment	2024	176	250	Other Material Handling Equipment_2024_250	0,250036	0,21	1,21822	1,98559	0,005	0,068	0,063	471,482	0,152	0,068137931
Other Material Handling Equipment	2024	251	500	Other Material Handling Equipment_2024_500	0,252116	0,212	1,26223	1,75588	0,005	0,072	0,066	470,2972	0,152	0,068137931
Other Material Handling Equipment	2024	1001	9999	Other Material Handling Equipment_2024_9999	0,069034	0,058	0,9458	2,27759	0,005	0,018	0,017	472,0545	0,153	0,068586207
Other Material Handling Equipment	2025	26	50	Other Material Handling Equipment_2025_50	0,88573	0,744	5,24797	4,23278	0,005	0,239	0,219	523,7088	0,169	0,075758621
Other Material Handling Equipment	2025	51	120	Other Material Handling Equipment_2025_120	0,241784	0,203	3,49652	2,05524	0,005	0,081	0,074	473,5884	0,153	0,068586207
Other Material Handling Equipment	2025	121	175	Other Material Handling Equipment_2025_175	0,225132	0,189	3,1679	1,39583	0,005	0,072	0,067	472,2193	0,153	0,068586207
Other Material Handling Equipment	2025	176	250	Other Material Handling Equipment_2025_250	0,237677	0,2	1,19728	1,77352	0,005	0,06	0,055	471,482	0,152	0,068137931
Other Material Handling Equipment	2025	251	500	Other Material Handling Equipment_2025_500	0,242568	0,204	1,25988	1,60116	0,005	0,067	0,061	470,2972	0,152	0,068137931
Other Material Handling Equipment	2025	1001	9999	Other Material Handling Equipment_2025_9999	0,077631	0,065	0,9587	2,29775	0,005	0,019	0,017	472,0545	0,153	0,068586207
Other Material Handling Equipment	2030	26	50	Other Material Handling Equipment_2030_50	1,542	0,598	5,237	3,447	0,007	0,048	0,048	568,299	0,053	0,023758621
Other Material Handling Equipment	2030	51	120	Other Material Handling Equipment_2030_120	1,57	0,304	3,784	1,762	0,006	0,043	0,043	568,299	0,027	0,012103448
Other Material Handling Equipment	2030	121	175	Other Material Handling Equipment_2030_175	2,287	0,22	3,341	0,64	0,006	0,028	0,028	568,299	0,019	0,008517241
Other Material Handling Equipment	2030	176	250	Other Material Handling Equipment_2030_250	2,539	0,206	1,138	0,535	0,006	0,018	0,018	568,299	0,018	0,008068966
Other Material Handling Equipment	2030	251	500	Other Material Handling Equipment_2030_500	3,342	0,205	1,083	0,505	0,005	0,018	0,018	568,299	0,018	0,008068966
Other Material Handling Equipment	2030	1001	9999	Other Material Handling Equipment_2030_9999	13,763	0,218	1,084	2,653	0,005	0,035	0,035	568,299	0,019	0,008517241
Other Material Handling Equipment	2035	26	50	Other Material Handling Equipment_2035_50	1,425	0,552	5,189	3,321	0,007	0,025	0,025	568,299	0,049	0,021965517
Other Material Handling Equipment	2035	51	120	Other Material Handling Equipment_2035_120	1,432	0,277	3,774	1,563	0,006	0,022	0,022	568,299	0,025	0,011206897
Other Material Handling Equipment	2035	121	175	Other Material Handling Equipment_2035_175	2,036	0,196	3,338	0,398	0,006	0,016	0,016	568,299	0,017	0,00762069
Other Material Handling Equipment	2035	176	250	Other Material Handling Equipment_2035_250	2,369	0,192	1,137	0,354	0,006	0,013	0,013	568,299	0,017	0,00762069
Other Material Handling Equipment	2035	251	500	Other Material Handling Equipment_2035_500	3,13	0,192	1,082	0,35	0,005	0,013	0,013	568,299	0,017	0,00762069
Other Material Handling Equipment	2035	1001	9999	Other Material Handling Equipment_2035_9999	12,454	0,197	1,082	2,525	0,005	0,027	0,027	568,299	0,017	0,00762069
Other Material Handling Equipment	2040	26	50	Other Material Handling Equipment_2040_50	1,42	0,551	5,191	3,269	0,007	0,018	0,018	568,299	0,049	0,021965517
Other Material Handling Equipment	2040	51	120	Other Material Handling Equipment_2040_120	1,407	0,272	3,775	1,502	0,006	0,017	0,017	568,3	0,024	0,010758621
Other Material Handling Equipment	2040	121	175	Other Material Handling Equipment_2040_175	1,956	0,188	3,339	0,314	0,006	0,012	0,012	568,299	0,017	0,00762069
Other Material Handling Equipment	2040	176	250	Other Material Handling Equipment_2040_250	2,307	0,187	1,137	0,298	0,006	0,011	0,011	568,299	0,016	0,007172414
Other Material Handling Equipment	2040	251	500	Other Material Handling Equipment_2040_500	3,048	0,187	1,082	0,298	0,005	0,011	0,011	568,299	0,016	0,007172414
Other Material Handling Equipment	2040	1001	9999	Other Material Handling Equipment_2040_9999	11,917	0,189	1,082	2,493	0,005	0,025	0,025	568,3	0,017	0,00762069
Pavers	1990	16	25	Pavers_1990_25	5,971	2,213	4,999	6,919	0,855	0,741	0,741	568,299	0,199	0,089206897
Pavers	1990	26	50	Pavers_1990_50	19,405	4,794	9,701	7,946	0,871	1,268	1,268	568,299	0,432	0,193655172
Pavers	1990	51	120	Pavers_1990_120	23,749	2,373	5,748	15,062	0,791	1,339	1,339	568,299	0,214	0,095931034
Pavers	1990	121	175	Pavers_1990_175	33,808	1,822	5,135	14,503	0,758	1,01	1,01	568,3	0,164	0,073517241
Pavers	1990	176	250	Pavers_1990_250	51,225	1,822	5,135	14,503	0,758	1,01	1,01	568,299	0,164	0,073517241
Pavers	1990	251	500	Pavers_1990_500	54,32	1,61	11,305	13,755	0,662	0,864	0,864	568,3	0,145	0,065
Pavers	2000	16	25	Pavers_2000_25	5,517	2,044	4,689	6,391	0,065	0,569	0,569	568,299	0,184	0,082482759
Pavers	2000	26	50	Pavers_2000_50	18,072	4,464	9,175	7,116	0,066	0,93	0,93	568,299	0,402	0,180206897
Pavers	2000	51	120	Pavers_2000_120	19,415	1,94	4,853	11,121	0,06	0,916	0,916	568,299	0,175	0,078448276
Pavers	2000	121	175	Pavers_2000_175	24,566	1,324	4,022	10,172	0,057	0,558	0,558	568,299	0,119	0,053344828
Pavers	2000	176	250	Pavers_2000_250	33,03	1,175	3,443	9,909	0,057	0,488	0,488	568,299	0,106	0,047517241
Pavers	2000	251	500	Pavers_2000_500	35,713	1,058	6,242	9,422	0,05	0,426	0,426	568,299	0,095	0,042586207
Pavers	2005	16	25	Pavers_2005_25	3,746	1,388	3,497	5,819	0,065	0,444	0,444	568,299	0,125	0,056034483
Pavers	2005	26	50	Pavers_2005_50	16,699	4,125	8,722	6,746	0,066	0,883	0,883	568,299	0,372	0,166758621
Pavers	2005	51	120	Pavers_2005_120	17,345	1,733	4,584	9,797	0,06	0,869	0,869	568,299	0,156	0,069931034
Pavers	2005	121	175	Pavers_2005_175	21,287	1,147	3,731	8,921	0,057	0,5	0,5	568,299	0,103	0,046172414
Pavers	2005	176	250	Pavers_2005_250	26,087	0,928	2,661	8,591	0,057	0,382	0,382	568,299	0,083	0,037206897
Pavers	2005	251	500	Pavers_2005_500	27,622	0,818	4,283	7,91	0,05	0,335	0,335	568,299	0,073	0,032724138
Pavers	2010	16	25	Pavers_2010_25	2,244446	1,886	6,22261	5,97127	0,005	0,619	0,569	585,4019	0,17	0,076206897
Pavers	2010	26	50	Pavers_2010_50	2,244446	1,886	6,22261	5,97127	0,005	0,619	0,569	585,4019	0,17	0,076206897
Pavers	2010	51	120	Pavers_2010_120	0,922393	0,775	3,82417	7,01944	0,005	0,54	0,497	521,2606	0,152	0,068137931
Pavers	2010	121	175	Pavers_2010_175	0,693583	0,583	3,10662	6,66867	0,005	0,337	0,31	525,3233	0,153	0,068586207
Pavers	2010	176	250	Pavers_2010_250	0,236627	0,199	1,01703	4,38018	0,005	0,111	0,102	526,8527	0,153	0,068586207
Pavers	2010	251	500	Pavers_2010_500	0,240458	0,202	1,1256	3,56944	0,005	0,123	0,113	517,8758	0,151	0,067689655
Pavers	2011	16	25	Pavers_2011_25	2,255759	1,895	6,28822	5,97418	0,005	0,621	0,571	583,8947	0,17	0,076206897
Pavers	2011	26	50	Pavers_2011_50	2,255759	1,895	6,28822	5,97418	0,005	0,621	0,571	583,8947	0,17	0,076206897
Pavers	2011	51	120	Pavers_2011_120	0,882284	0,741	3,7912	6,70468	0,005	0,521	0,479	519,7431	0,152	0,068137931
Pavers	2011	121	175	Pavers_2011_175	0,67473	0,567	3,11177	6,45159	0,005	0,327	0,301	524,0864	0,153	0,068586207
Pavers	2011	176	250	Pavers_2011_250	0,244703	0,206	1,02596	4,38871	0,005	0,112	0,103	525,5251	0,153	0,068586207
Pavers	2011	251	500	Pavers_2011_500	0,249329	0,21	1,13249	3,58498	0,005	0,125	0,115	516,5811	0,151	0,067689655
Pavers	2012	16	25	Pavers_2012_25	2,286702	1,921	6,36408	5,86068	0,005	0,609	0,56	582,5825	0,17	0,076206897
Pavers	2012	26	50	Pavers_2012_50	2,286702	1,921	6,36408	5,86068	0,005	0,609	0,56	582,5825	0,17	0,076206897
Pavers	2012	51	120	Pavers_2012_120	0,886577	0,745	3,81157	6,67323	0,005	0,523	0,481	518,3581	0,152	0,068137931
Pavers	2012	121	175	Pavers_2012_175	0,677654	0,569	3,13178	6,44162	0,005	0,329	0,303	522,8325	0,153	0,068586207
Pavers	2012	176	250	Pavers_2012_250	0,2532	0,213	1,035	4,41317	0,005	0,114	0,105	524,2222	0,153	0,068586207

Pavers	2012	251	500	Pavers_2012_500	0,257974	0,217	1,13914	3,59993	0,005	0,127	0,117	515,2863	0,151	0,067689655
Pavers	2013	16	25	Pavers_2013_25	2,27571	1,912	6,39148	5,84153	0,005	0,605	0,557	580,2093	0,171	0,076655172
Pavers	2013	26	50	Pavers_2013_50	2,27571	1,912	6,39148	5,84153	0,005	0,605	0,557	580,2093	0,171	0,076655172
Pavers	2013	51	120	Pavers_2013_120	0,845721	0,711	3,79289	6,43604	0,005	0,501	0,461	516,6013	0,152	0,068137931
Pavers	2013	121	175	Pavers_2013_175	0,630117	0,529	3,11657	6,05919	0,005	0,304	0,28	519,6823	0,153	0,068586207
Pavers	2013	176	250	Pavers_2013_250	0,245733	0,206	1,01743	4,23038	0,005	0,106	0,098	521,5314	0,153	0,068586207
Pavers	2013	251	500	Pavers_2013_500	0,242925	0,204	1,08604	3,39449	0,005	0,118	0,108	514,2313	0,151	0,067689655
Pavers	2014	16	25	Pavers_2014_25	2,258865	1,898	6,3806	5,71682	0,005	0,595	0,547	577,016	0,171	0,076655172
Pavers	2014	26	50	Pavers_2014_50	2,258865	1,898	6,3806	5,71682	0,005	0,595	0,547	577,016	0,171	0,076655172
Pavers	2014	51	120	Pavers_2014_120	0,81298	0,683	3,77256	6,19872	0,005	0,483	0,444	514,3769	0,152	0,068137931
Pavers	2014	121	175	Pavers_2014_175	0,597911	0,502	3,1146	5,73631	0,005	0,287	0,264	516,745	0,153	0,068586207
Pavers	2014	176	250	Pavers_2014_250	0,247393	0,208	1,02279	4,14032	0,005	0,105	0,097	518,7225	0,153	0,068586207
Pavers	2014	251	500	Pavers_2014_500	0,214341	0,18	1,00469	3,04734	0,005	0,101	0,093	512,1908	0,151	0,067689655
Pavers	2015	16	25	Pavers_2015_25	2,205076	1,853	6,34019	5,63731	0,005	0,579	0,533	571,0859	0,17	0,076206897
Pavers	2015	26	50	Pavers_2015_50	2,205076	1,853	6,34019	5,63731	0,005	0,579	0,533	571,0859	0,17	0,076206897
Pavers	2015	51	120	Pavers_2015_120	0,809163	0,68	3,78832	6,14096	0,005	0,479	0,441	509,3767	0,152	0,068137931
Pavers	2015	121	175	Pavers_2015_175	0,582419	0,489	3,11546	5,53669	0,005	0,277	0,255	511,6457	0,153	0,068586207
Pavers	2015	176	250	Pavers_2015_250	0,254974	0,214	1,03121	4,16051	0,005	0,107	0,098	513,4682	0,153	0,068586207
Pavers	2015	251	500	Pavers_2015_500	0,209561	0,176	0,97787	2,91741	0,005	0,097	0,089	506,0973	0,151	0,067689655
Pavers	2016	16	25	Pavers_2016_25	2,174792	1,827	6,33993	5,57882	0,005	0,569	0,523	565,2336	0,17	0,076206897
Pavers	2016	26	50	Pavers_2016_50	2,174792	1,827	6,33993	5,57882	0,005	0,569	0,523	565,2336	0,17	0,076206897
Pavers	2016	51	120	Pavers_2016_120	0,773362	0,65	3,76854	5,88646	0,005	0,457	0,42	503,7795	0,152	0,068137931
Pavers	2016	121	175	Pavers_2016_175	0,515586	0,433	3,08023	4,87397	0,005	0,242	0,223	506,5401	0,153	0,068586207
Pavers	2016	176	250	Pavers_2016_250	0,254126	0,214	1,03591	4,02384	0,005	0,104	0,096	508,0698	0,153	0,068586207
Pavers	2016	251	500	Pavers_2016_500	0,214564	0,18	0,9829	2,88492	0,005	0,096	0,089	500,9364	0,151	0,067689655
Pavers	2017	16	25	Pavers_2017_25	2,059621	1,731	6,19932	5,43675	0,005	0,54	0,496	556,4528	0,17	0,076206897
Pavers	2017	26	50	Pavers_2017_50	2,059621	1,731	6,19932	5,43675	0,005	0,54	0,496	556,4528	0,17	0,076206897
Pavers	2017	51	120	Pavers_2017_120	0,744072	0,625	3,75882	5,69243	0,005	0,437	0,402	495,9253	0,152	0,068137931
Pavers	2017	121	175	Pavers_2017_175	0,462819	0,389	3,06282	4,35312	0,005	0,214	0,197	498,967	0,153	0,068586207
Pavers	2017	176	250	Pavers_2017_250	0,247933	0,208	1,03652	3,80866	0,005	0,1	0,092	499,5617	0,153	0,068586207
Pavers	2017	251	500	Pavers_2017_500	0,199578	0,168	0,97942	2,48674	0,005	0,087	0,08	491,7843	0,151	0,067689655
Pavers	2018	16	25	Pavers_2018_25	1,831035	1,539	5,8493	5,12103	0,005	0,478	0,44	547,0785	0,17	0,076206897
Pavers	2018	26	50	Pavers_2018_50	1,831035	1,539	5,8493	5,12103	0,005	0,478	0,44	547,0785	0,17	0,076206897
Pavers	2018	51	120	Pavers_2018_120	0,637446	0,536	3,66032	5,01936	0,005	0,375	0,345	488,1812	0,152	0,068137931
Pavers	2018	121	175	Pavers_2018_175	0,403099	0,339	3,03913	3,7472	0,005	0,183	0,168	491,322	0,153	0,068586207
Pavers	2018	176	250	Pavers_2018_250	0,235833	0,198	1,03446	3,47438	0,005	0,092	0,085	491,543	0,153	0,068586207
Pavers	2018	251	500	Pavers_2018_500	0,195547	0,164	0,98125	2,32002	0,005	0,083	0,076	484,2774	0,151	0,067689655
Pavers	2019	16	25	Pavers_2019_25	1,687019	1,418	5,65687	4,91634	0,005	0,436	0,401	538,3246	0,17	0,076206897
Pavers	2019	26	50	Pavers_2019_50	1,687019	1,418	5,65687	4,91634	0,005	0,436	0,401	538,3246	0,17	0,076206897
Pavers	2019	51	120	Pavers_2019_120	0,589904	0,496	3,62215	4,67048	0,005	0,345	0,318	480,2509	0,152	0,068137931
Pavers	2019	121	175	Pavers_2019_175	0,355588	0,299	3,01323	3,24473	0,005	0,159	0,146	483,3938	0,153	0,068586207
Pavers	2019	176	250	Pavers_2019_250	0,222293	0,187	1,03181	3,11084	0,005	0,084	0,077	483,5743	0,153	0,068586207
Pavers	2019	251	500	Pavers_2019_500	0,198123	0,166	0,98586	2,26992	0,005	0,081	0,075	476,9707	0,151	0,067689655
Pavers	2020	16	25	Pavers_2020_25	1,568718	1,318	5,52345	4,76401	0,005	0,402	0,37	526,2098	0,17	0,076206897
Pavers	2020	26	50	Pavers_2020_50	1,568718	1,318	5,52345	4,76401	0,005	0,402	0,37	526,2098	0,17	0,076206897
Pavers	2020	51	120	Pavers_2020_120	0,558949	0,47	3,60405	4,42718	0,005	0,325	0,299	469,8815	0,152	0,068137931
Pavers	2020	121	175	Pavers_2020_175	0,324615	0,273	3,0097	2,91833	0,005	0,142	0,131	472,7746	0,153	0,068586207
Pavers	2020	176	250	Pavers_2020_250	0,209036	0,176	1,02834	2,77699	0,005	0,076	0,07	472,8337	0,153	0,068586207
Pavers	2020	251	500	Pavers_2020_500	0,195949	0,165	0,98677	2,13394	0,005	0,077	0,071	466,2059	0,151	0,067689655
Pavers	2021	16	25	Pavers_2021_25	1,43708	1,208	5,30162	4,60183	0,005	0,37	0,34	526,5153	0,17	0,076206897
Pavers	2021	26	50	Pavers_2021_50	1,43708	1,208	5,30162	4,60183	0,005	0,37	0,34	526,5153	0,17	0,076206897
Pavers	2021	51	120	Pavers_2021_120	0,499355	0,42	3,56251	4,02622	0,005	0,285	0,262	469,7736	0,152	0,068137931
Pavers	2021	121	175	Pavers_2021_175	0,304315	0,256	3,01647	2,6948	0,005	0,13	0,12	472,5552	0,153	0,068586207
Pavers	2021	176	250	Pavers_2021_250	0,196899	0,165	1,02422	2,4844	0,005	0,07	0,064	472,4765	0,153	0,068586207
Pavers	2021	251	500	Pavers_2021_500	0,195105	0,164	0,9877	2,05298	0,005	0,074	0,068	465,5908	0,151	0,067689655
Pavers	2022	16	25	Pavers_2022_25	1,299052	1,092	5,11433	4,42092	0,005	0,33	0,303	526,8963	0,17	0,076206897
Pavers	2022	26	50	Pavers_2022_50	1,299052	1,092	5,11433	4,42092	0,005	0,33	0,303	526,8963	0,17	0,076206897
Pavers	2022	51	120	Pavers_2022_120	0,443951	0,373	3,52511	3,65932	0,005	0,248	0,228	470,1854	0,152	0,068137931
Pavers	2022	121	175	Pavers_2022_175	0,255688	0,215	2,99478	2,17958	0,005	0,104	0,095	472,7599	0,153	0,068586207
Pavers	2022	176	250	Pavers_2022_250	0,167123	0,14	1,01231	1,89985	0,005	0,055	0,05	472,3718	0,153	0,068586207
Pavers	2022	251	500	Pavers_2022_500	0,178545	0,15	0,98238	1,81028	0,005	0,063	0,058	466,0042	0,151	0,067689655
Pavers	2023	16	25	Pavers_2023_25	1,198318	1,007	5,00667	4,28484	0,005	0,299	0,275	526,8595	0,17	0,076206897
Pavers	2023	26	50	Pavers_2023_50	1,198318	1,007	5,00667	4,28484	0,005	0,299	0,275	526,8595	0,17	0,076206897
Pavers	2023	51	120	Pavers_2023_120	0,415607	0,349	3,50733	3,42661	0,005	0,226	0,208	470,0839	0,152	0,068137931
Pavers	2023	121	175	Pavers_2023_175	0,237199	0,199	2,99398	1,95517	0,005	0,092	0,085	472,7178	0,153	0,068586207
Pavers	2023	176	250	Pavers_2023_250	0,154288	0,13	1,01018	1,6106	0,005	0,047	0,043	472,6051	0,153	0,068586207
Pavers	2023	251	500	Pavers_2023_500	0,18061	0,152	0,98653	1,77101	0,005	0,062	0,057	466,0038	0,151	0,067689655
Pavers	2024	16	25	Pavers_2024_25	1,130978	0,95	4,95625	4,20308	0,005	0,279	0,257	526,8565	0,17	0,076206897
Pavers	2024	26	50	Pavers_2024_50	1,130978	0,95	4,95625	4,20308	0,005	0,279	0,257	526,8565	0,17	0,076206897
Pavers	2024	51	120	Pavers_2024_120	0,40131	0,337	3,50784	3,2771	0,005	0,213	0,196	470,2262	0,152	0,068137931
Pavers	2024	121	175	Pavers_2024_175	0,226916	0,191	3,0042	1,80882	0,005	0,084	0,078	472,6605	0,153	0,068586207
Pavers	2024	176	250	Pavers_2024_250	0,141914	0,119	1,00872	1,34323	0,005	0,041	0,038	473,2362	0,153	0,068586207
Pavers	2024	251	500	Pavers_2024_500	0,169789	0,143	0,98624	1,54798	0,005	0,054	0,049	467,1711	0,151	0,067689655

Pavers	2025	16	25	Pavers_2025_25	1,092933	0,918	4,94451	4,13112	0,005	0,265	0,243	526,8533	0,17	0,076206897
Pavers	2025	26	50	Pavers_2025_50	1,092933	0,918	4,94451	4,13112	0,005	0,265	0,243	526,8533	0,17	0,076206897
Pavers	2025	51	120	Pavers_2025_120	0,373474	0,314	3,49286	3,06788	0,005	0,19	0,175	469,8988	0,152	0,068137931
Pavers	2025	121	175	Pavers_2025_175	0,214799	0,18	3,0071	1,64396	0,005	0,077	0,071	472,485	0,153	0,068586207
Pavers	2025	176	250	Pavers_2025_250	0,127304	0,107	1,00414	1,03493	0,005	0,034	0,031	473,4832	0,153	0,068586207
Pavers	2025	251	500	Pavers_2025_500	0,136633	0,115	0,96892	1,13351	0,005	0,039	0,036	465,8824	0,151	0,067689655
Pavers	2030	16	25	Pavers_2030_25	1,849	0,685	2,339	4,332	0,007	0,161	0,161	568,299	0,061	0,027344828
Pavers	2030	26	50	Pavers_2030_50	3,42	0,845	5,396	3,841	0,007	0,134	0,134	568,299	0,076	0,034068966
Pavers	2030	51	120	Pavers_2030_120	4,084	0,408	3,8	2,468	0,006	0,121	0,121	568,3	0,036	0,016137931
Pavers	2030	121	175	Pavers_2030_175	5,577	0,3	3,326	1,425	0,006	0,074	0,074	568,299	0,027	0,012103448
Pavers	2030	176	250	Pavers_2030_250	7,306	0,259	1,192	1,246	0,006	0,045	0,045	568,299	0,023	0,010310345
Pavers	2030	251	500	Pavers_2030_500	8,558	0,253	1,181	1,141	0,005	0,043	0,043	568,299	0,022	0,009862069
Pavers	2035	16	25	Pavers_2035_25	1,849	0,685	2,339	4,332	0,007	0,161	0,161	568,299	0,061	0,027344828
Pavers	2035	26	50	Pavers_2035_50	2,812	0,694	5,26	3,555	0,007	0,076	0,076	568,299	0,062	0,027793103
Pavers	2035	51	120	Pavers_2035_120	3,386	0,338	3,774	1,986	0,006	0,069	0,069	568,299	0,03	0,013448276
Pavers	2035	121	175	Pavers_2035_175	4,543	0,244	3,319	0,889	0,006	0,043	0,043	568,299	0,022	0,009862069
Pavers	2035	176	250	Pavers_2035_250	6,219	0,221	1,157	0,772	0,006	0,027	0,027	568,3	0,019	0,008517241
Pavers	2035	251	500	Pavers_2035_500	7,364	0,218	1,111	0,722	0,005	0,026	0,026	568,299	0,019	0,008517241
Pavers	2040	16	25	Pavers_2040_25	1,849	0,685	2,339	4,332	0,007	0,161	0,161	568,299	0,061	0,027344828
Pavers	2040	26	50	Pavers_2040_50	2,504	0,618	5,189	3,393	0,007	0,047	0,047	568,299	0,055	0,024655172
Pavers	2040	51	120	Pavers_2040_120	3,03	0,302	3,763	1,731	0,006	0,043	0,043	568,299	0,027	0,012103448
Pavers	2040	121	175	Pavers_2040_175	3,958	0,213	3,319	0,583	0,006	0,027	0,027	568,299	0,019	0,008517241
Pavers	2040	176	250	Pavers_2040_250	5,625	0,2	1,138	0,525	0,006	0,018	0,018	568,299	0,018	0,008068966
Pavers	2040	251	500	Pavers_2040_500	6,703	0,198	1,085	0,498	0,005	0,018	0,018	568,299	0,017	0,00762069
Paving Equipment	1990	16	25	Paving Equipment_1990_25	5,257	2,213	4,999	6,919	0,855	0,741	0,741	568,299	0,199	0,089206897
Paving Equipment	1990	26	50	Paving Equipment_1990_50	21,788	4,84	9,783	7,965	0,871	1,277	1,277	568,299	0,436	0,195448276
Paving Equipment	1990	51	120	Paving Equipment_1990_120	24,593	2,398	5,796	15,202	0,791	1,352	1,352	568,299	0,216	0,096827586
Paving Equipment	1990	121	175	Paving Equipment_1990_175	35,738	1,88	5,196	14,821	0,758	1,044	1,044	568,3	0,169	0,075758621
Paving Equipment	1990	176	250	Paving Equipment_1990_250	43,262	1,88	5,196	14,821	0,758	1,044	1,044	568,299	0,169	0,075758621
Paving Equipment	2000	16	25	Paving Equipment_2000_25	4,652	1,958	4,53	6,358	0,065	0,563	0,563	568,299	0,176	0,078896552
Paving Equipment	2000	26	50	Paving Equipment_2000_50	19,86	4,412	9,076	7,101	0,066	0,921	0,921	568,299	0,398	0,178413793
Paving Equipment	2000	51	120	Paving Equipment_2000_120	19,826	1,933	4,844	11,122	0,06	0,909	0,909	568,299	0,174	0,078
Paving Equipment	2000	121	175	Paving Equipment_2000_175	25,015	1,316	4,018	10,15	0,057	0,553	0,553	568,299	0,118	0,052896552
Paving Equipment	2000	176	250	Paving Equipment_2000_250	26,974	1,172	3,458	9,895	0,057	0,486	0,486	568,299	0,105	0,047068966
Paving Equipment	2005	16	25	Paving Equipment_2005_25	2,184	0,919	2,642	5,412	0,065	0,347	0,347	568,299	0,082	0,036758621
Paving Equipment	2005	26	50	Paving Equipment_2005_50	18,352	4,077	8,626	6,73	0,066	0,875	0,875	568,299	0,367	0,164517241
Paving Equipment	2005	51	120	Paving Equipment_2005_120	17,633	1,719	4,557	9,754	0,06	0,86	0,86	568,299	0,155	0,069482759
Paving Equipment	2005	121	175	Paving Equipment_2005_175	21,589	1,135	3,705	8,873	0,057	0,494	0,494	568,299	0,102	0,045724138
Paving Equipment	2005	176	250	Paving Equipment_2005_250	21,201	0,921	2,655	8,548	0,057	0,38	0,38	568,299	0,083	0,037206897
Paving Equipment	2010	16	25	Paving Equipment_2010_25	1,378997	1,159	4,92203	5,35696	0,005	0,47	0,433	578,6236	0,168	0,075310345
Paving Equipment	2010	26	50	Paving Equipment_2010_50	1,378997	1,159	4,92203	5,35696	0,005	0,47	0,433	578,6236	0,168	0,075310345
Paving Equipment	2010	51	120	Paving Equipment_2010_120	0,934999	0,786	3,90118	7,23593	0,005	0,553	0,508	526,5834	0,153	0,068586207
Paving Equipment	2010	121	175	Paving Equipment_2010_175	0,573407	0,482	3,13688	6,09511	0,005	0,295	0,271	523,4127	0,152	0,068137931
Paving Equipment	2010	176	250	Paving Equipment_2010_250	0,486641	0,409	1,69744	6,03614	0,005	0,224	0,206	524,3728	0,153	0,068586207
Paving Equipment	2011	16	25	Paving Equipment_2011_25	1,380687	1,16	4,99687	5,36974	0,005	0,472	0,434	577,1303	0,168	0,075310345
Paving Equipment	2011	26	50	Paving Equipment_2011_50	1,380687	1,16	4,99687	5,36974	0,005	0,472	0,434	577,1303	0,168	0,075310345
Paving Equipment	2011	51	120	Paving Equipment_2011_120	0,895349	0,752	3,87125	6,99544	0,005	0,536	0,493	524,9269	0,153	0,068586207
Paving Equipment	2011	121	175	Paving Equipment_2011_175	0,56507	0,475	3,14337	5,97526	0,005	0,29	0,267	522,1549	0,152	0,068137931
Paving Equipment	2011	176	250	Paving Equipment_2011_250	0,466258	0,392	1,64572	5,77978	0,005	0,213	0,196	523,0323	0,153	0,068586207
Paving Equipment	2012	16	25	Paving Equipment_2012_25	1,384947	1,164	5,06516	5,34363	0,005	0,47	0,432	575,687	0,168	0,075310345
Paving Equipment	2012	26	50	Paving Equipment_2012_50	1,384947	1,164	5,06516	5,34363	0,005	0,47	0,432	575,687	0,168	0,075310345
Paving Equipment	2012	51	120	Paving Equipment_2012_120	0,910401	0,765	3,90635	7,04165	0,005	0,546	0,503	523,5886	0,153	0,068586207
Paving Equipment	2012	121	175	Paving Equipment_2012_175	0,56544	0,475	3,15801	5,9326	0,005	0,29	0,267	520,7286	0,152	0,068137931
Paving Equipment	2012	176	250	Paving Equipment_2012_250	0,474854	0,399	1,657	5,81292	0,005	0,215	0,198	521,7154	0,153	0,068586207
Paving Equipment	2013	16	25	Paving Equipment_2013_25	1,327494	1,115	5,02677	5,2986	0,005	0,459	0,422	572,4644	0,168	0,075310345
Paving Equipment	2013	26	50	Paving Equipment_2013_50	1,327494	1,115	5,02677	5,2986	0,005	0,459	0,422	572,4644	0,168	0,075310345
Paving Equipment	2013	51	120	Paving Equipment_2013_120	0,845445	0,71	3,86369	6,6576	0,005	0,507	0,467	520,6724	0,153	0,068586207
Paving Equipment	2013	121	175	Paving Equipment_2013_175	0,532035	0,447	3,1205	5,60344	0,005	0,271	0,249	517,6606	0,152	0,068137931
Paving Equipment	2013	176	250	Paving Equipment_2013_250	0,40741	0,342	1,48037	5,25206	0,005	0,18	0,166	519,5215	0,153	0,068586207
Paving Equipment	2014	16	25	Paving Equipment_2014_25	1,253528	1,053	4,95215	5,18385	0,005	0,437	0,402	569,4822	0,168	0,075310345
Paving Equipment	2014	26	50	Paving Equipment_2014_50	1,253528	1,053	4,95215	5,18385	0,005	0,437	0,402	569,4822	0,168	0,075310345
Paving Equipment	2014	51	120	Paving Equipment_2014_120	0,805438	0,677	3,83664	6,36952	0,005	0,486	0,447	518,0756	0,153	0,068586207
Paving Equipment	2014	121	175	Paving Equipment_2014_175	0,494038	0,415	3,09686	5,21567	0,005	0,249	0,229	515,0343	0,152	0,068137931
Paving Equipment	2014	176	250	Paving Equipment_2014_250	0,369032	0,31	1,37011	4,78232	0,005	0,158	0,146	516,8998	0,153	0,068586207
Paving Equipment	2015	16	25	Paving Equipment_2015_25	1,166929	0,981	4,86895	5,02757	0,005	0,407	0,374	563,5534	0,168	0,075310345
Paving Equipment	2015	26	50	Paving Equipment_2015_50	1,166929	0,981	4,86895	5,02757	0,005	0,407	0,374	563,5534	0,168	0,075310345
Paving Equipment	2015	51	120	Paving Equipment_2015_120	0,786628	0,661	3,83329	6,14454	0,005	0,471	0,433	513,1672	0,153	0,068586207
Paving Equipment	2015	121	175	Paving Equipment_2015_175	0,48887	0,411	3,10403	4,96561	0,005	0,242	0,223	509,8942	0,152	0,068137931
Paving Equipment	2015	176	250	Paving Equipment_2015_250	0,374849	0,315	1,37947	4,77176	0,005	0,159	0,146	511,6544	0,153	0,068586207
Paving Equipment	2016	16	25	Paving Equipment_2016_25	1,178909	0,991	4,93662	4,98487	0,005	0,403	0,371	557,7058	0,168	0,075310345
Paving Equipment	2016	26	50	Paving Equipment_2016_50	1,178909	0,991	4,93662	4,98487	0,005	0,403	0,371	557,7058	0,168	0,075310345
Paving Equipment	2016	51	120	Paving Equipment_2016_120	0,741701	0,623	3,79639	5,7333	0,005	0,438	0,403	507,9102	0,153	0,068586207
Paving Equipment	2016	121	175	Paving Equipment_2016_175	0,442497	0,372	3,08114	4,3217	0,005	0,214	0,197	504,8201	0,152	0,068137931

Paving Equipment	2016	176	250	Paving Equipment_2016_250	0,353542	0,297	1,33145	4,42821	0,005	0,148	0,136	506,1965	0,153	0,068586207
Paving Equipment	2017	16	25	Paving Equipment_2017_25	1,102141	0,926	4,80403	4,72756	0,005	0,359	0,33	548,6481	0,168	0,075310345
Paving Equipment	2017	26	50	Paving Equipment_2017_50	1,102141	0,926	4,80403	4,72756	0,005	0,359	0,33	548,6481	0,168	0,075310345
Paving Equipment	2017	51	120	Paving Equipment_2017_120	0,670017	0,563	3,74146	5,20745	0,005	0,391	0,359	500,1649	0,153	0,068586207
Paving Equipment	2017	121	175	Paving Equipment_2017_175	0,407568	0,342	3,07321	3,89633	0,005	0,195	0,179	497,148	0,152	0,068137931
Paving Equipment	2017	176	250	Paving Equipment_2017_250	0,342633	0,288	1,333	4,12109	0,005	0,141	0,13	498,7323	0,153	0,068586207
Paving Equipment	2018	16	25	Paving Equipment_2018_25	0,877571	0,737	4,41578	4,31244	0,005	0,286	0,263	540,6115	0,168	0,075310345
Paving Equipment	2018	26	50	Paving Equipment_2018_50	0,877571	0,737	4,41578	4,31244	0,005	0,286	0,263	540,6115	0,168	0,075310345
Paving Equipment	2018	51	120	Paving Equipment_2018_120	0,534861	0,449	3,60743	4,27034	0,005	0,302	0,278	492,1184	0,153	0,068586207
Paving Equipment	2018	121	175	Paving Equipment_2018_175	0,337615	0,284	3,02602	3,17208	0,005	0,155	0,143	489,2024	0,152	0,068137931
Paving Equipment	2018	176	250	Paving Equipment_2018_250	0,307374	0,258	1,28117	3,58656	0,005	0,123	0,113	490,6833	0,153	0,068586207
Paving Equipment	2019	16	25	Paving Equipment_2019_25	0,838543	0,705	4,40798	4,23779	0,005	0,27	0,248	531,8612	0,168	0,075310345
Paving Equipment	2019	26	50	Paving Equipment_2019_50	0,838543	0,705	4,40798	4,23779	0,005	0,27	0,248	531,8612	0,168	0,075310345
Paving Equipment	2019	51	120	Paving Equipment_2019_120	0,50594	0,425	3,59849	4,04152	0,005	0,281	0,258	484,387	0,153	0,068586207
Paving Equipment	2019	121	175	Paving Equipment_2019_175	0,302373	0,254	3,0109	2,6924	0,005	0,134	0,123	481,2251	0,152	0,068137931
Paving Equipment	2019	176	250	Paving Equipment_2019_250	0,286526	0,241	1,24449	3,25106	0,005	0,112	0,103	482,6441	0,153	0,068586207
Paving Equipment	2020	16	25	Paving Equipment_2020_25	0,73951	0,621	4,22322	3,9519	0,005	0,217	0,2	520,1235	0,168	0,075310345
Paving Equipment	2020	26	50	Paving Equipment_2020_50	0,73951	0,621	4,22322	3,9519	0,005	0,217	0,2	520,1235	0,168	0,075310345
Paving Equipment	2020	51	120	Paving Equipment_2020_120	0,472907	0,397	3,58172	3,78064	0,005	0,256	0,235	473,3249	0,153	0,068586207
Paving Equipment	2020	121	175	Paving Equipment_2020_175	0,294586	0,248	3,02393	2,55498	0,005	0,128	0,118	470,7359	0,152	0,068137931
Paving Equipment	2020	176	250	Paving Equipment_2020_250	0,289784	0,243	1,25215	3,2202	0,005	0,111	0,102	472,1514	0,153	0,068586207
Paving Equipment	2021	16	25	Paving Equipment_2021_25	0,698022	0,587	4,21072	3,88226	0,005	0,2	0,184	520,3965	0,168	0,075310345
Paving Equipment	2021	26	50	Paving Equipment_2021_50	0,698022	0,587	4,21072	3,88226	0,005	0,2	0,184	520,3965	0,168	0,075310345
Paving Equipment	2021	51	120	Paving Equipment_2021_120	0,422572	0,355	3,5537	3,45065	0,005	0,219	0,201	473,2205	0,153	0,068586207
Paving Equipment	2021	121	175	Paving Equipment_2021_175	0,272687	0,229	3,03229	2,31505	0,005	0,114	0,105	470,6495	0,152	0,068137931
Paving Equipment	2021	176	250	Paving Equipment_2021_250	0,250607	0,211	1,20904	2,58202	0,005	0,092	0,085	472,151	0,153	0,068586207
Paving Equipment	2022	16	25	Paving Equipment_2022_25	0,68013	0,571	4,24448	3,83611	0,005	0,188	0,173	520,6594	0,168	0,075310345
Paving Equipment	2022	26	50	Paving Equipment_2022_50	0,68013	0,571	4,24448	3,83611	0,005	0,188	0,173	520,6594	0,168	0,075310345
Paving Equipment	2022	51	120	Paving Equipment_2022_120	0,351718	0,296	3,50075	2,99968	0,005	0,171	0,157	473,4475	0,153	0,068586207
Paving Equipment	2022	121	175	Paving Equipment_2022_175	0,253077	0,213	3,03777	2,07331	0,005	0,101	0,093	470,6646	0,152	0,068137931
Paving Equipment	2022	176	250	Paving Equipment_2022_250	0,232653	0,195	1,20363	2,22813	0,005	0,083	0,076	472,169	0,153	0,068586207
Paving Equipment	2023	16	25	Paving Equipment_2023_25	0,644074	0,541	4,24108	3,77446	0,005	0,173	0,159	521,1138	0,169	0,075758621
Paving Equipment	2023	26	50	Paving Equipment_2023_50	0,644074	0,541	4,24108	3,77446	0,005	0,173	0,159	521,1138	0,169	0,075758621
Paving Equipment	2023	51	120	Paving Equipment_2023_120	0,331302	0,278	3,50331	2,83717	0,005	0,152	0,14	473,427	0,153	0,068586207
Paving Equipment	2023	121	175	Paving Equipment_2023_175	0,242414	0,204	3,05059	1,91255	0,005	0,093	0,086	470,663	0,152	0,068137931
Paving Equipment	2023	176	250	Paving Equipment_2023_250	0,208228	0,175	1,16523	1,88495	0,005	0,07	0,065	472,169	0,153	0,068586207
Paving Equipment	2024	16	25	Paving Equipment_2024_25	0,622364	0,523	4,27468	3,74329	0,005	0,164	0,151	521,0575	0,169	0,075758621
Paving Equipment	2024	26	50	Paving Equipment_2024_50	0,622364	0,523	4,27468	3,74329	0,005	0,164	0,151	521,0575	0,169	0,075758621
Paving Equipment	2024	51	120	Paving Equipment_2024_120	0,311995	0,262	3,50288	2,67309	0,005	0,135	0,125	473,1748	0,153	0,068586207
Paving Equipment	2024	121	175	Paving Equipment_2024_175	0,233948	0,197	3,06623	1,78512	0,005	0,086	0,079	470,6614	0,152	0,068137931
Paving Equipment	2024	176	250	Paving Equipment_2024_250	0,164733	0,138	1,11417	1,29567	0,005	0,048	0,044	472,2124	0,153	0,068586207
Paving Equipment	2025	16	25	Paving Equipment_2025_25	0,566694	0,476	4,20347	3,62672	0,005	0,141	0,13	520,9975	0,169	0,075758621
Paving Equipment	2025	26	50	Paving Equipment_2025_50	0,566694	0,476	4,20347	3,62672	0,005	0,141	0,13	520,9975	0,169	0,075758621
Paving Equipment	2025	51	120	Paving Equipment_2025_120	0,287394	0,241	3,48256	2,49628	0,005	0,118	0,108	473,4239	0,153	0,068586207
Paving Equipment	2025	121	175	Paving Equipment_2025_175	0,208465	0,175	3,03837	1,509	0,005	0,075	0,069	470,4844	0,152	0,068137931
Paving Equipment	2025	176	250	Paving Equipment_2025_250	0,158556	0,133	1,11653	1,10952	0,005	0,043	0,04	472,2341	0,153	0,068586207
Paving Equipment	2030	16	25	Paving Equipment_2030_25	1,628	0,685	2,339	4,332	0,007	0,161	0,161	568,299	0,061	0,027344828
Paving Equipment	2030	26	50	Paving Equipment_2030_50	3,613	0,802	5,309	3,809	0,007	0,126	0,126	568,299	0,072	0,032275862
Paving Equipment	2030	51	120	Paving Equipment_2030_120	4,007	0,39	3,774	2,393	0,006	0,114	0,114	568,3	0,035	0,015689655
Paving Equipment	2030	121	175	Paving Equipment_2030_175	5,525	0,29	3,306	1,363	0,006	0,07	0,07	568,299	0,026	0,011655172
Paving Equipment	2030	176	250	Paving Equipment_2030_250	5,771	0,25	1,171	1,176	0,006	0,042	0,042	568,299	0,022	0,009862069
Paving Equipment	2035	16	25	Paving Equipment_2035_25	1,628	0,685	2,339	4,332	0,007	0,161	0,161	568,299	0,061	0,027344828
Paving Equipment	2035	26	50	Paving Equipment_2035_50	2,991	0,664	5,181	3,511	0,007	0,07	0,07	568,3	0,059	0,026448276
Paving Equipment	2035	51	120	Paving Equipment_2035_120	3,343	0,326	3,753	1,928	0,006	0,064	0,064	568,299	0,029	0,013
Paving Equipment	2035	121	175	Paving Equipment_2035_175	4,485	0,235	3,303	0,832	0,006	0,04	0,04	568,299	0,021	0,009413793
Paving Equipment	2035	176	250	Paving Equipment_2035_250	4,886	0,212	1,14	0,714	0,006	0,024	0,024	568,299	0,019	0,008517241
Paving Equipment	2040	16	25	Paving Equipment_2040_25	1,628	0,685	2,339	4,332	0,007	0,161	0,161	568,299	0,061	0,027344828
Paving Equipment	2040	26	50	Paving Equipment_2040_50	2,651	0,589	5,111	3,361	0,007	0,042	0,042	568,3	0,053	0,023758621
Paving Equipment	2040	51	120	Paving Equipment_2040_120	2,989	0,291	3,744	1,687	0,006	0,039	0,039	568,299	0,026	0,011655172
Paving Equipment	2040	121	175	Paving Equipment_2040_175	3,901	0,205	3,304	0,536	0,006	0,025	0,025	568,299	0,018	0,008068966
Paving Equipment	2040	176	250	Paving Equipment_2040_250	4,452	0,193	1,127	0,485	0,006	0,017	0,017	568,299	0,017	0,00762069
Plate Compactors	1990	6	15	Plate Compactors_1990_15	2,156	1,804	4,999	9,999	1,049	0,975	0,975	568,299	0,162	0,07262069
Plate Compactors	2000	6	15	Plate Compactors_2000_15	1,852	1,55	4,606	8,519	0,079	0,708	0,708	568,299	0,139	0,062310345
Plate Compactors	2005	6	15	Plate Compactors_2005_15	0,955	0,799	3,503	5,435	0,079	0,377	0,377	568,299	0,072	0,032275862
Plate Compactors	2010	6	15	Plate Compactors_2010_15	0,794	0,664	3,469	4,178	0,008	0,198	0,198	568,299	0,059	0,026448276
Plate Compactors	2011	6	15	Plate Compactors_2011_15	0,791	0,662	3,469	4,15	0,008	0,172	0,172	568,299	0,059	0,026448276
Plate Compactors	2012	6	15	Plate Compactors_2012_15	0,79	0,661	3,469	4,142	0,008	0,165	0,165	568,3	0,059	0,026448276
Plate Compactors	2013	6	15	Plate Compactors_2013_15	0,79	0,661	3,469	4,142	0,008	0,162	0,162	568,3	0,059	0,026448276
Plate Compactors	2014	6	15	Plate Compactors_2014_15	0,79	0,661	3,469	4,142	0,008	0,161	0,161	568,299	0,059	0,026448276
Plate Compactors	2015	6	15	Plate Compactors_2015_15	0,79	0,661	3,469	4,142	0,008	0,161	0,161	568,299	0,059	0,026448276
Plate Compactors	2016	6	15	Plate Compactors_2016_15	0,79	0,661	3,469	4,142	0,008	0,161	0,161	568,299	0,059	0,026448276
Plate Compactors	2017	6	15	Plate Compactors_2017_15	0,79	0,661	3,469	4,142	0,008	0,161	0,161	568,299	0,059	0,026448276
Plate Compactors	2018	6	15	Plate Compactors_2018_15	0,79	0,661	3,47	4,142	0,008	0,161	0,161	568,3	0,059	0,026448276

Plate Compactors	2019	6	15	Plate Compactors_2019_15	0,79	0,661	3,469	4,142	0,008	0,161	0,161	568,299	0,059	0,026448276
Plate Compactors	2020	6	15	Plate Compactors_2020_15	0,79	0,661	3,469	4,142	0,008	0,161	0,161	568,299	0,059	0,026448276
Plate Compactors	2021	6	15	Plate Compactors_2021_15	0,79	0,661	3,469	4,142	0,008	0,161	0,161	568,299	0,059	0,026448276
Plate Compactors	2022	6	15	Plate Compactors_2022_15	0,79	0,661	3,469	4,142	0,008	0,161	0,161	568,299	0,059	0,026448276
Plate Compactors	2023	6	15	Plate Compactors_2023_15	0,79	0,661	3,469	4,142	0,008	0,161	0,161	568,299	0,059	0,026448276
Plate Compactors	2024	6	15	Plate Compactors_2024_15	0,79	0,661	3,469	4,142	0,008	0,161	0,161	568,299	0,059	0,026448276
Plate Compactors	2025	6	15	Plate Compactors_2025_15	0,79	0,661	3,469	4,142	0,008	0,161	0,161	568,299	0,059	0,026448276
Plate Compactors	2030	6	15	Plate Compactors_2030_15	0,79	0,661	3,469	4,142	0,008	0,161	0,161	568,299	0,059	0,026448276
Plate Compactors	2035	6	15	Plate Compactors_2035_15	0,79	0,661	3,47	4,142	0,008	0,161	0,161	568,299	0,059	0,026448276
Plate Compactors	2040	6	15	Plate Compactors_2040_15	0,79	0,661	3,469	4,142	0,008	0,161	0,161	568,299	0,059	0,026448276
Pressure Washers	1990	6	15	Pressure Washers_1990_15	4,972	1,804	4,999	9,999	1,018	0,974	0,974	568,299	0,162	0,07262069
Pressure Washers	1990	16	25	Pressure Washers_1990_25	8,915	2,213	5	6,92	0,83	0,74	0,74	568,3	0,199	0,089206897
Pressure Washers	1990	26	50	Pressure Washers_1990_50	20,959	2,601	5,721	7,129	0,846	0,821	0,821	568,299	0,234	0,104896552
Pressure Washers	1990	51	120	Pressure Washers_1990_120	23,659	1,743	4,735	12,634	0,768	0,874	0,874	568,299	0,157	0,07037931
Pressure Washers	1990	121	175	Pressure Washers_1990_175	82,001	1,272	4,353	11,763	1,123	0,649	0,649	568,299	0,114	0,051103448
Pressure Washers	1990	176	250	Pressure Washers_1990_250	77,237	0,953	3,084	9,035	1,077	0,476	0,476	568,299	0,086	0,038551724
Pressure Washers	2000	6	15	Pressure Washers_2000_15	4,186	1,518	4,875	8,846	0,079	0,613	0,613	568,299	0,137	0,061413793
Pressure Washers	2000	16	25	Pressure Washers_2000_25	6,717	1,667	4,783	6,405	0,065	0,51	0,51	568,299	0,15	0,067241379
Pressure Washers	2000	26	50	Pressure Washers_2000_50	19,934	2,474	5,524	6,381	0,066	0,615	0,615	568,3	0,223	0,099965517
Pressure Washers	2000	51	120	Pressure Washers_2000_120	19,23	1,417	3,967	9,062	0,06	0,613	0,613	568,3	0,127	0,056931034
Pressure Washers	2000	121	175	Pressure Washers_2000_175	66,055	1,024	3,38	8,685	0,059	0,399	0,399	568,299	0,092	0,041241379
Pressure Washers	2000	176	250	Pressure Washers_2000_250	35,508	0,438	1,005	6,315	0,058	0,143	0,143	568,299	0,039	0,017482759
Pressure Washers	2005	6	15	Pressure Washers_2005_15	3,341	1,212	4,38	7,615	0,079	0,505	0,505	568,3	0,109	0,048862069
Pressure Washers	2005	16	25	Pressure Washers_2005_25	5,048	1,253	3,922	6,014	0,065	0,432	0,432	568,299	0,113	0,050655172
Pressure Washers	2005	26	50	Pressure Washers_2005_50	17,362	2,154	5,075	5,932	0,066	0,566	0,566	568,299	0,194	0,086965517
Pressure Washers	2005	51	120	Pressure Washers_2005_120	16,424	1,21	3,682	7,651	0,06	0,566	0,566	568,299	0,109	0,048862069
Pressure Washers	2005	121	175	Pressure Washers_2005_175	55,65	0,863	3,072	7,441	0,059	0,349	0,349	568,299	0,077	0,034517241
Pressure Washers	2005	176	250	Pressure Washers_2005_250	21,871	0,27	0,986	4,822	0,058	0,111	0,111	568,299	0,024	0,010758621
Pressure Washers	2010	6	15	Pressure Washers_2010_15	2,628	0,953	4,027	6,387	0,008	0,38	0,38	568,299	0,086	0,038551724
Pressure Washers	2010	16	25	Pressure Washers_2010_25	3,872	0,961	3,309	5,477	0,007	0,342	0,342	568,299	0,086	0,038551724
Pressure Washers	2010	26	50	Pressure Washers_2010_50	13,073	1,622	4,517	5,501	0,007	0,453	0,453	568,299	0,146	0,065448276
Pressure Washers	2010	51	120	Pressure Washers_2010_120	12,296	0,906	3,503	6,273	0,006	0,451	0,451	568,299	0,081	0,036310345
Pressure Washers	2010	121	175	Pressure Washers_2010_175	41,062	0,637	2,967	5,773	0,006	0,275	0,275	568,299	0,057	0,025551724
Pressure Washers	2010	176	250	Pressure Washers_2010_250	16,502	0,203	0,986	2,5	0,006	0,1	0,1	568,299	0,018	0,008068966
Pressure Washers	2011	6	15	Pressure Washers_2011_15	2,504	0,908	3,952	6,134	0,008	0,358	0,358	568,299	0,081	0,036310345
Pressure Washers	2011	16	25	Pressure Washers_2011_25	3,706	0,92	3,179	5,36	0,007	0,325	0,325	568,299	0,083	0,037206897
Pressure Washers	2011	26	50	Pressure Washers_2011_50	12,056	1,496	4,382	5,405	0,007	0,428	0,428	568,299	0,135	0,060517241
Pressure Washers	2011	51	120	Pressure Washers_2011_120	11,392	0,839	3,468	5,939	0,006	0,43	0,43	568,299	0,075	0,03362069
Pressure Washers	2011	121	175	Pressure Washers_2011_175	38,303	0,594	2,953	5,441	0,006	0,263	0,263	568,299	0,053	0,023758621
Pressure Washers	2011	176	250	Pressure Washers_2011_250	15,247	0,188	0,986	2,086	0,006	0,072	0,072	568,299	0,016	0,007172414
Pressure Washers	2012	6	15	Pressure Washers_2012_15	2,385	0,865	3,874	5,874	0,008	0,338	0,338	568,299	0,078	0,034965517
Pressure Washers	2012	16	25	Pressure Washers_2012_25	3,564	0,884	3,043	5,239	0,007	0,307	0,307	568,299	0,079	0,035413793
Pressure Washers	2012	26	50	Pressure Washers_2012_50	10,983	1,363	4,238	5,306	0,007	0,402	0,402	568,299	0,123	0,055137931
Pressure Washers	2012	51	120	Pressure Washers_2012_120	10,457	0,77	3,433	5,578	0,006	0,4	0,4	568,299	0,069	0,030931034
Pressure Washers	2012	121	175	Pressure Washers_2012_175	35,56	0,551	2,941	5,109	0,006	0,244	0,244	568,299	0,049	0,021965517
Pressure Washers	2012	176	250	Pressure Washers_2012_250	13,887	0,171	0,986	1,749	0,006	0,046	0,046	568,299	0,015	0,006724138
Pressure Washers	2013	6	15	Pressure Washers_2013_15	2,27	0,823	3,796	5,616	0,008	0,318	0,318	568,299	0,074	0,033172414
Pressure Washers	2013	16	25	Pressure Washers_2013_25	3,431	0,851	2,907	5,117	0,007	0,289	0,289	568,299	0,076	0,034068966
Pressure Washers	2013	26	50	Pressure Washers_2013_50	9,897	1,228	4,092	5,086	0,007	0,367	0,367	568,299	0,11	0,049310345
Pressure Washers	2013	51	120	Pressure Washers_2013_120	9,523	0,701	3,399	5,226	0,006	0,366	0,366	568,299	0,063	0,028241379
Pressure Washers	2013	121	175	Pressure Washers_2013_175	32,885	0,51	2,931	4,803	0,006	0,225	0,225	568,299	0,046	0,02062069
Pressure Washers	2013	176	250	Pressure Washers_2013_250	12,508	0,154	0,986	1,468	0,006	0,021	0,021	568,299	0,013	0,005827586
Pressure Washers	2014	6	15	Pressure Washers_2014_15	2,16	0,783	3,723	5,369	0,008	0,298	0,298	568,299	0,07	0,03137931
Pressure Washers	2014	16	25	Pressure Washers_2014_25	3,308	0,821	2,78	5	0,007	0,272	0,272	568,299	0,074	0,033172414
Pressure Washers	2014	26	50	Pressure Washers_2014_50	8,833	1,096	3,951	4,873	0,007	0,332	0,332	568,299	0,098	0,043931034
Pressure Washers	2014	51	120	Pressure Washers_2014_120	8,608	0,634	3,367	4,912	0,006	0,332	0,332	568,299	0,057	0,025551724
Pressure Washers	2014	121	175	Pressure Washers_2014_175	30,292	0,469	2,923	4,513	0,006	0,206	0,206	568,299	0,042	0,018827586
Pressure Washers	2014	176	250	Pressure Washers_2014_250	11,167	0,137	0,986	1,047	0,006	0,014	0,014	568,299	0,012	0,00537931
Pressure Washers	2015	6	15	Pressure Washers_2015_15	2,059	0,747	3,657	5,141	0,008	0,28	0,28	568,299	0,067	0,030034483
Pressure Washers	2015	16	25	Pressure Washers_2015_25	3,196	0,793	2,666	4,89	0,007	0,256	0,256	568,299	0,071	0,031827586
Pressure Washers	2015	26	50	Pressure Washers_2015_50	7,868	0,976	3,833	4,685	0,007	0,3	0,3	568,299	0,088	0,039448276
Pressure Washers	2015	51	120	Pressure Washers_2015_120	7,703	0,567	3,336	4,551	0,006	0,297	0,297	568,299	0,051	0,022862069
Pressure Washers	2015	121	175	Pressure Washers_2015_175	27,567	0,427	2,917	4,115	0,006	0,187	0,187	568,299	0,038	0,017034483
Pressure Washers	2015	176	250	Pressure Washers_2015_250	9,864	0,121	0,986	0,69	0,006	0,01	0,01	568,299	0,01	0,004482759
Pressure Washers	2016	6	15	Pressure Washers_2016_15	1,986	0,72	3,622	4,978	0,008	0,264	0,264	568,299	0,065	0,029137931
Pressure Washers	2016	16	25	Pressure Washers_2016_25	3,116	0,773	2,604	4,803	0,007	0,244	0,244	568,299	0,069	0,030931034
Pressure Washers	2016	26	50	Pressure Washers_2016_50	6,97	0,865	3,729	4,515	0,007	0,269	0,269	568,299	0,078	0,034965517
Pressure Washers	2016	51	120	Pressure Washers_2016_120	6,839	0,504	3,308	4,209	0,006	0,264	0,264	568,299	0,045	0,020172414
Pressure Washers	2016	121	175	Pressure Washers_2016_175	24,906	0,386	2,913	3,726	0,006	0,168	0,168	568,299	0,034	0,015241379
Pressure Washers	2016	176	250	Pressure Washers_2016_250	8,667	0,107	0,986	0,399	0,006	0,009	0,009	568,299	0,009	0,004034483
Pressure Washers	2017	6	15	Pressure Washers_2017_15	1,927	0,699	3,599	4,847	0,008	0,25	0,25	568,299	0,063	0,028241379
Pressure Washers	2017	16	25	Pressure Washers_2017_25	3,053	0,757	2,564	4,729	0,007	0,233	0,233	568,299	0,068	0,030482759
Pressure Washers	2017	26	50	Pressure Washers_2017_50	6,126	0,76	3,632	4,355	0,007	0,24	0,24	568,299	0,068	0,030482759

Pressure Washers	2017	51	120	Pressure Washers_2017_120	6,031	0,444	3,283	3,888	0,006	0,233	0,233	568,3	0,04	0,017931034
Pressure Washers	2017	121	175	Pressure Washers_2017_175	22,349	0,346	2,91	3,349	0,006	0,149	0,149	568,299	0,031	0,013896552
Pressure Washers	2017	176	250	Pressure Washers_2017_250	8,288	0,102	0,986	0,317	0,006	0,009	0,009	568,299	0,009	0,004034483
Pressure Washers	2018	6	15	Pressure Washers_2018_15	1,874	0,679	3,58	4,728	0,008	0,237	0,237	568,299	0,061	0,027344828
Pressure Washers	2018	16	25	Pressure Washers_2018_25	2,997	0,744	2,531	4,661	0,007	0,224	0,224	568,299	0,067	0,030034483
Pressure Washers	2018	26	50	Pressure Washers_2018_50	5,332	0,661	3,542	4,202	0,007	0,212	0,212	568,299	0,059	0,026448276
Pressure Washers	2018	51	120	Pressure Washers_2018_120	5,276	0,388	3,26	3,584	0,006	0,203	0,203	568,299	0,035	0,015689655
Pressure Washers	2018	121	175	Pressure Washers_2018_175	19,96	0,309	2,908	2,989	0,006	0,132	0,132	568,299	0,027	0,012103448
Pressure Washers	2018	176	250	Pressure Washers_2018_250	8,072	0,099	0,986	0,277	0,006	0,009	0,009	568,299	0,008	0,003586207
Pressure Washers	2019	6	15	Pressure Washers_2019_15	1,824	0,662	3,562	4,617	0,008	0,224	0,224	568,299	0,059	0,026448276
Pressure Washers	2019	16	25	Pressure Washers_2019_25	2,947	0,731	2,501	4,596	0,007	0,214	0,214	568,299	0,066	0,029586207
Pressure Washers	2019	26	50	Pressure Washers_2019_50	4,585	0,569	3,457	4,053	0,007	0,184	0,184	568,299	0,051	0,022862069
Pressure Washers	2019	51	120	Pressure Washers_2019_120	4,575	0,337	3,24	3,295	0,006	0,174	0,174	568,299	0,03	0,013448276
Pressure Washers	2019	121	175	Pressure Washers_2019_175	18,102	0,28	2,907	2,67	0,006	0,117	0,117	568,299	0,025	0,011206897
Pressure Washers	2019	176	250	Pressure Washers_2019_250	8,005	0,098	0,986	0,265	0,006	0,009	0,009	568,299	0,008	0,003586207
Pressure Washers	2020	6	15	Pressure Washers_2020_15	1,78	0,646	3,546	4,516	0,008	0,212	0,212	568,299	0,058	0,026
Pressure Washers	2020	16	25	Pressure Washers_2020_25	2,904	0,721	2,473	4,538	0,007	0,205	0,205	568,299	0,065	0,029137931
Pressure Washers	2020	26	50	Pressure Washers_2020_50	4,025	0,499	3,393	3,917	0,007	0,161	0,161	568,299	0,045	0,020172414
Pressure Washers	2020	51	120	Pressure Washers_2020_120	4,048	0,298	3,225	3,036	0,006	0,151	0,151	568,299	0,026	0,011655172
Pressure Washers	2020	121	175	Pressure Washers_2020_175	16,638	0,258	2,907	2,383	0,006	0,104	0,104	568,299	0,023	0,010310345
Pressure Washers	2020	176	250	Pressure Washers_2020_250	8,005	0,098	0,986	0,265	0,006	0,009	0,009	568,299	0,008	0,003586207
Pressure Washers	2021	6	15	Pressure Washers_2021_15	1,747	0,634	3,531	4,441	0,008	0,201	0,201	568,299	0,057	0,025551724
Pressure Washers	2021	16	25	Pressure Washers_2021_25	2,87	0,712	2,446	4,497	0,007	0,196	0,196	568,299	0,064	0,028689655
Pressure Washers	2021	26	50	Pressure Washers_2021_50	3,542	0,439	3,329	3,765	0,007	0,136	0,136	568,299	0,039	0,017482759
Pressure Washers	2021	51	120	Pressure Washers_2021_120	3,592	0,264	3,21	2,766	0,006	0,129	0,129	568,299	0,023	0,010310345
Pressure Washers	2021	121	175	Pressure Washers_2021_175	15,389	0,238	2,907	2,118	0,006	0,093	0,093	568,299	0,021	0,009413793
Pressure Washers	2021	176	250	Pressure Washers_2021_250	8,005	0,098	0,986	0,265	0,006	0,009	0,009	568,299	0,008	0,003586207
Pressure Washers	2022	6	15	Pressure Washers_2022_15	1,725	0,626	3,519	4,39	0,008	0,193	0,193	568,299	0,056	0,025103448
Pressure Washers	2022	16	25	Pressure Washers_2022_25	2,847	0,706	2,426	4,47	0,007	0,188	0,188	568,299	0,063	0,028241379
Pressure Washers	2022	26	50	Pressure Washers_2022_50	3,213	0,398	3,291	3,649	0,007	0,117	0,117	568,3	0,035	0,015689655
Pressure Washers	2022	51	120	Pressure Washers_2022_120	3,281	0,241	3,202	2,56	0,006	0,112	0,112	568,299	0,021	0,009413793
Pressure Washers	2022	121	175	Pressure Washers_2022_175	14,252	0,221	2,907	1,871	0,006	0,082	0,082	568,299	0,019	0,008517241
Pressure Washers	2022	176	250	Pressure Washers_2022_250	8,005	0,098	0,986	0,265	0,006	0,009	0,009	568,299	0,008	0,003586207
Pressure Washers	2023	6	15	Pressure Washers_2023_15	1,706	0,618	3,508	4,345	0,008	0,186	0,186	568,299	0,055	0,024655172
Pressure Washers	2023	16	25	Pressure Washers_2023_25	2,827	0,701	2,407	4,447	0,007	0,182	0,182	568,299	0,063	0,028241379
Pressure Washers	2023	26	50	Pressure Washers_2023_50	2,928	0,363	3,26	3,541	0,007	0,101	0,101	568,299	0,032	0,014344828
Pressure Washers	2023	51	120	Pressure Washers_2023_120	3,012	0,222	3,196	2,377	0,006	0,097	0,097	568,299	0,02	0,008965517
Pressure Washers	2023	121	175	Pressure Washers_2023_175	13,244	0,205	2,907	1,665	0,006	0,072	0,072	568,299	0,018	0,008068966
Pressure Washers	2023	176	250	Pressure Washers_2023_250	8,005	0,098	0,986	0,265	0,006	0,009	0,009	568,299	0,008	0,003586207
Pressure Washers	2024	6	15	Pressure Washers_2024_15	1,689	0,612	3,499	4,305	0,008	0,181	0,181	568,299	0,055	0,024655172
Pressure Washers	2024	16	25	Pressure Washers_2024_25	2,811	0,697	2,39	4,426	0,007	0,178	0,178	568,299	0,062	0,027793103
Pressure Washers	2024	26	50	Pressure Washers_2024_50	2,685	0,333	3,233	3,441	0,007	0,087	0,087	568,299	0,03	0,013448276
Pressure Washers	2024	51	120	Pressure Washers_2024_120	2,78	0,204	3,191	2,229	0,006	0,084	0,084	568,299	0,018	0,008068966
Pressure Washers	2024	121	175	Pressure Washers_2024_175	12,332	0,191	2,907	1,482	0,006	0,062	0,062	568,299	0,017	0,00762069
Pressure Washers	2024	176	250	Pressure Washers_2024_250	8,005	0,098	0,986	0,265	0,006	0,009	0,009	568,299	0,008	0,003586207
Pressure Washers	2025	6	15	Pressure Washers_2025_15	1,674	0,607	3,491	4,269	0,008	0,178	0,178	568,299	0,054	0,024206897
Pressure Washers	2025	16	25	Pressure Washers_2025_25	2,797	0,694	2,376	4,407	0,007	0,175	0,175	568,299	0,062	0,027793103
Pressure Washers	2025	26	50	Pressure Washers_2025_50	2,472	0,306	3,21	3,344	0,007	0,075	0,075	568,299	0,027	0,012103448
Pressure Washers	2025	51	120	Pressure Washers_2025_120	2,575	0,189	3,186	2,1	0,006	0,072	0,072	568,299	0,017	0,00762069
Pressure Washers	2025	121	175	Pressure Washers_2025_175	11,476	0,178	2,907	1,31	0,006	0,053	0,053	568,299	0,016	0,007172414
Pressure Washers	2025	176	250	Pressure Washers_2025_250	8,005	0,098	0,986	0,265	0,006	0,009	0,009	568,299	0,008	0,003586207
Pressure Washers	2030	6	15	Pressure Washers_2030_15	1,632	0,592	3,47	4,164	0,008	0,166	0,166	568,3	0,053	0,023758621
Pressure Washers	2030	16	25	Pressure Washers_2030_25	2,766	0,686	2,34	4,347	0,007	0,165	0,165	568,299	0,061	0,027344828
Pressure Washers	2030	26	50	Pressure Washers_2030_50	1,735	0,215	3,124	2,989	0,007	0,03	0,03	568,299	0,019	0,008517241
Pressure Washers	2030	51	120	Pressure Washers_2030_120	1,821	0,134	3,167	1,594	0,006	0,028	0,028	568,3	0,012	0,00537931
Pressure Washers	2030	121	175	Pressure Washers_2030_175	8,178	0,126	2,907	0,619	0,006	0,024	0,024	568,299	0,011	0,004931034
Pressure Washers	2030	176	250	Pressure Washers_2030_250	8,005	0,098	0,986	0,265	0,006	0,009	0,009	568,299	0,008	0,003586207
Pressure Washers	2035	6	15	Pressure Washers_2035_15	1,624	0,589	3,47	4,143	0,008	0,162	0,162	568,3	0,053	0,023758621
Pressure Washers	2035	16	25	Pressure Washers_2035_25	2,761	0,685	2,34	4,332	0,007	0,162	0,162	568,299	0,061	0,027344828
Pressure Washers	2035	26	50	Pressure Washers_2035_50	1,515	0,188	3,101	2,882	0,007	0,015	0,015	568,299	0,016	0,007172414
Pressure Washers	2035	51	120	Pressure Washers_2035_120	1,58	0,116	3,161	1,421	0,006	0,014	0,014	568,299	0,01	0,004482759
Pressure Washers	2035	121	175	Pressure Washers_2035_175	7,052	0,109	2,907	0,382	0,006	0,013	0,013	568,299	0,009	0,004034483
Pressure Washers	2035	176	250	Pressure Washers_2035_250	8,005	0,098	0,986	0,265	0,006	0,009	0,009	568,299	0,008	0,003586207
Pressure Washers	2040	6	15	Pressure Washers_2040_15	1,624	0,589	3,469	4,142	0,008	0,161	0,161	568,299	0,053	0,023758621
Pressure Washers	2040	16	25	Pressure Washers_2040_25	2,761	0,685	2,339	4,332	0,007	0,161	0,161	568,299	0,061	0,027344828
Pressure Washers	2040	26	50	Pressure Washers_2040_50	1,5	0,186	3,098	2,836	0,007	0,01	0,01	568,299	0,016	0,007172414
Pressure Washers	2040	51	120	Pressure Washers_2040_120	1,54	0,113	3,16	1,365	0,006	0,01	0,01	568,299	0,01	0,004482759
Pressure Washers	2040	121	175	Pressure Washers_2040_175	6,649	0,103	2,907	0,293	0,006	0,01	0,01	568,299	0,009	0,004034483
Pressure Washers	2040	176	250	Pressure Washers_2040_250	8,005	0,098	0,986	0,265	0,006	0,009	0,009	568,299	0,008	0,003586207
Pumps	1990	6	15	Pumps_1990_15	3,929	1,804	4,999	10	1,018	0,974	0,974	568,299	0,162	0,07262069
Pumps	1990	16	25	Pumps_1990_25	12,652	2,213	4,999	6,92	0,83	0,74	0,74	568,299	0,199	0,089206897
Pumps	1990	26	50	Pumps_1990_50	33,318	3,307	7,004	7,391	0,846	0,964	0,964	568,299	0,298	0,133586207
Pumps	1990	51	120	Pumps_1990_120	44,398	1,941	5,049	13,378	0,768	1,022	1,022	568,299	0,175	0,078448276

Pumps	1990	121	175	Pumps_1990_175	54,599	1,328	4,466	12,036	0,736	0,678	0,678	568,299	0,119	0,053344828
Pumps	1990	176	250	Pumps_1990_250	78,462	1,328	4,466	12,036	0,736	0,678	0,678	568,299	0,119	0,053344828
Pumps	1990	251	500	Pumps_1990_500	123,784	1,222	7,034	11,736	0,642	0,614	0,614	568,3	0,11	0,049310345
Pumps	1990	501	750	Pumps_1990_750	204,643	1,222	7,034	11,736	0,658	0,614	0,614	568,299	0,11	0,049310345
Pumps	1990	1001	9999	Pumps_1990_9999	484,933	1,22	7,034	11,736	0,658	0,612	0,612	568,299	0,11	0,049310345
Pumps	2000	6	15	Pumps_2000_15	3,754	1,723	4,875	9,08	0,079	0,747	0,747	568,299	0,155	0,069482759
Pumps	2000	16	25	Pumps_2000_25	11,979	2,095	4,783	6,405	0,065	0,569	0,569	568,299	0,189	0,084724138
Pumps	2000	26	50	Pumps_2000_50	31,461	3,123	6,715	6,608	0,066	0,718	0,718	568,299	0,281	0,125965517
Pumps	2000	51	120	Pumps_2000_120	36,02	1,575	4,223	9,604	0,06	0,711	0,711	568,3	0,142	0,063655172
Pumps	2000	121	175	Pumps_2000_175	43,406	1,055	3,435	8,734	0,057	0,419	0,419	568,299	0,095	0,042586207
Pumps	2000	176	250	Pumps_2000_250	51,67	0,874	2,707	8,397	0,057	0,339	0,339	568,299	0,078	0,034965517
Pumps	2000	251	500	Pumps_2000_500	83,09	0,82	3,956	8,188	0,05	0,311	0,311	568,299	0,074	0,033172414
Pumps	2000	501	750	Pumps_2000_750	137,368	0,82	3,956	8,188	0,051	0,311	0,311	568,299	0,074	0,033172414
Pumps	2000	1001	9999	Pumps_2000_9999	372,377	0,936	4,533	8,775	0,051	0,351	0,351	568,299	0,084	0,037655172
Pumps	2005	6	15	Pumps_2005_15	3,036	1,394	4,38	7,817	0,079	0,621	0,621	568,299	0,125	0,056034483
Pumps	2005	16	25	Pumps_2005_25	9,278	1,622	3,922	6,014	0,065	0,483	0,483	568,299	0,146	0,065448276
Pumps	2005	26	50	Pumps_2005_50	27,809	2,76	6,203	6,155	0,066	0,664	0,664	568,299	0,249	0,11162069
Pumps	2005	51	120	Pumps_2005_120	30,825	1,348	3,91	8,1	0,06	0,657	0,657	568,3	0,121	0,054241379
Pumps	2005	121	175	Pumps_2005_175	36,106	0,878	3,114	7,408	0,057	0,363	0,363	568,299	0,079	0,035413793
Pumps	2005	176	250	Pumps_2005_250	36,853	0,623	1,836	6,99	0,057	0,239	0,239	568,299	0,056	0,025103448
Pumps	2005	251	500	Pumps_2005_500	56,766	0,56	2,32	6,535	0,05	0,219	0,219	568,299	0,05	0,022413793
Pumps	2005	501	750	Pumps_2005_750	96,43	0,575	2,32	6,679	0,051	0,221	0,221	568,299	0,051	0,022862069
Pumps	2005	1001	9999	Pumps_2005_9999	289,357	0,728	2,838	7,658	0,051	0,258	0,258	568,299	0,065	0,029137931
Pumps	2010	6	15	Pumps_2010_15	2,449	1,124	4,027	6,554	0,008	0,473	0,473	568,299	0,101	0,045275862
Pumps	2010	16	25	Pumps_2010_25	7,245	1,267	3,309	5,477	0,007	0,384	0,384	568,299	0,114	0,051103448
Pumps	2010	26	50	Pumps_2010_50	22,041	2,188	5,634	5,74	0,007	0,545	0,545	568,3	0,197	0,088310345
Pumps	2010	51	120	Pumps_2010_120	23,77	1,039	3,735	6,675	0,006	0,538	0,538	568,299	0,093	0,041689655
Pumps	2010	121	175	Pumps_2010_175	28,171	0,685	3,033	5,961	0,006	0,298	0,298	568,299	0,061	0,027344828
Pumps	2010	176	250	Pumps_2010_250	26,273	0,444	1,359	5,586	0,006	0,17	0,17	568,299	0,04	0,017931034
Pumps	2010	251	500	Pumps_2010_500	40,384	0,398	1,536	5,074	0,005	0,158	0,158	568,299	0,035	0,015689655
Pumps	2010	501	750	Pumps_2010_750	68,724	0,41	1,536	5,207	0,005	0,161	0,161	568,299	0,037	0,016586207
Pumps	2010	1001	9999	Pumps_2010_9999	218,911	0,55	1,991	6,617	0,005	0,196	0,196	568,299	0,049	0,021965517
Pumps	2011	6	15	Pumps_2011_15	2,324	1,067	3,952	6,283	0,008	0,441	0,441	568,299	0,096	0,043034483
Pumps	2011	16	25	Pumps_2011_25	6,815	1,192	3,179	5,36	0,007	0,361	0,361	568,299	0,107	0,047965517
Pumps	2011	26	50	Pumps_2011_50	20,53	2,038	5,474	5,645	0,007	0,518	0,518	568,299	0,183	0,082034483
Pumps	2011	51	120	Pumps_2011_120	22,177	0,969	3,698	6,322	0,006	0,514	0,514	568,299	0,087	0,039
Pumps	2011	121	175	Pumps_2011_175	26,426	0,642	3,02	5,63	0,006	0,286	0,286	568,299	0,058	0,026
Pumps	2011	176	250	Pumps_2011_250	24,051	0,407	1,272	5,206	0,006	0,153	0,153	568,299	0,036	0,016137931
Pumps	2011	251	500	Pumps_2011_500	36,969	0,365	1,405	4,71	0,005	0,143	0,143	568,299	0,032	0,014344828
Pumps	2011	501	750	Pumps_2011_750	62,964	0,376	1,405	4,841	0,005	0,145	0,145	568,299	0,033	0,014793103
Pumps	2011	1001	9999	Pumps_2011_9999	203,755	0,512	1,835	6,273	0,005	0,183	0,183	568,299	0,046	0,02062069
Pumps	2012	6	15	Pumps_2012_15	2,194	1,007	3,874	5,999	0,008	0,407	0,407	568,299	0,09	0,040344828
Pumps	2012	16	25	Pumps_2012_25	6,363	1,113	3,043	5,239	0,007	0,337	0,337	568,299	0,1	0,044827586
Pumps	2012	26	50	Pumps_2012_50	18,887	1,875	5,296	5,545	0,007	0,488	0,488	568,299	0,169	0,075758621
Pumps	2012	51	120	Pumps_2012_120	20,51	0,896	3,66	5,939	0,006	0,481	0,481	568,299	0,08	0,035862069
Pumps	2012	121	175	Pumps_2012_175	24,576	0,597	3,009	5,28	0,006	0,265	0,265	568,299	0,053	0,023758621
Pumps	2012	176	250	Pumps_2012_250	22,301	0,377	1,218	4,846	0,006	0,139	0,139	568,299	0,034	0,015241379
Pumps	2012	251	500	Pumps_2012_500	34,322	0,338	1,311	4,367	0,005	0,13	0,13	568,299	0,03	0,013448276
Pumps	2012	501	750	Pumps_2012_750	58,469	0,349	1,311	4,495	0,005	0,132	0,132	568,299	0,031	0,013896552
Pumps	2012	1001	9999	Pumps_2012_9999	188,287	0,473	1,682	5,916	0,005	0,168	0,168	568,299	0,042	0,018827586
Pumps	2013	6	15	Pumps_2013_15	2,065	0,948	3,796	5,716	0,008	0,373	0,373	568,299	0,085	0,038103448
Pumps	2013	16	25	Pumps_2013_25	5,914	1,034	2,907	5,117	0,007	0,314	0,314	568,3	0,093	0,041689655
Pumps	2013	26	50	Pumps_2013_50	17,185	1,706	5,11	5,323	0,007	0,448	0,448	568,299	0,153	0,068586207
Pumps	2013	51	120	Pumps_2013_120	18,831	0,823	3,623	5,563	0,006	0,443	0,443	568,299	0,074	0,033172414
Pumps	2013	121	175	Pumps_2013_175	22,712	0,552	2,998	4,949	0,006	0,244	0,244	568,299	0,049	0,021965517
Pumps	2013	176	250	Pumps_2013_250	20,801	0,352	1,181	4,498	0,006	0,127	0,127	568,3	0,031	0,013896552
Pumps	2013	251	500	Pumps_2013_500	32,081	0,316	1,241	4,037	0,005	0,119	0,119	568,299	0,028	0,012551724
Pumps	2013	501	750	Pumps_2013_750	54,658	0,326	1,241	4,163	0,005	0,121	0,121	568,299	0,029	0,013
Pumps	2013	1001	9999	Pumps_2013_9999	173,151	0,435	1,538	5,558	0,005	0,154	0,154	568,299	0,039	0,017482759
Pumps	2014	6	15	Pumps_2014_15	1,942	0,891	3,723	5,445	0,008	0,341	0,341	568,299	0,08	0,035862069
Pumps	2014	16	25	Pumps_2014_25	5,492	0,96	2,78	5	0,007	0,291	0,291	568,299	0,086	0,038551724
Pumps	2014	26	50	Pumps_2014_50	15,493	1,538	4,929	5,107	0,007	0,409	0,409	568,299	0,138	0,061862069
Pumps	2014	51	120	Pumps_2014_120	17,179	0,751	3,587	5,226	0,006	0,403	0,403	568,299	0,067	0,030034483
Pumps	2014	121	175	Pumps_2014_175	20,895	0,508	2,989	4,635	0,006	0,222	0,222	568,299	0,045	0,020172414
Pumps	2014	176	250	Pumps_2014_250	19,3	0,326	1,149	4,09	0,006	0,115	0,115	568,299	0,029	0,013
Pumps	2014	251	500	Pumps_2014_500	29,829	0,294	1,181	3,648	0,005	0,108	0,108	568,299	0,026	0,011655172
Pumps	2014	501	750	Pumps_2014_750	50,824	0,303	1,181	3,77	0,005	0,11	0,11	568,299	0,027	0,012103448
Pumps	2014	1001	9999	Pumps_2014_9999	158,959	0,399	1,406	5,21	0,005	0,141	0,141	568,299	0,036	0,016137931
Pumps	2015	6	15	Pumps_2015_15	1,831	0,84	3,658	5,196	0,008	0,311	0,311	568,299	0,075	0,03362069
Pumps	2015	16	25	Pumps_2015_25	5,112	0,894	2,666	4,89	0,007	0,27	0,27	568,299	0,08	0,035862069
Pumps	2015	26	50	Pumps_2015_50	13,946	1,384	4,775	4,916	0,007	0,371	0,371	568,3	0,124	0,055586207
Pumps	2015	51	120	Pumps_2015_120	15,537	0,679	3,554	4,842	0,006	0,364	0,364	568,3	0,061	0,027344828
Pumps	2015	121	175	Pumps_2015_175	18,983	0,461	2,983	4,202	0,006	0,2	0,2	568,299	0,041	0,01837931

Pumps	2015	176	250	Pumps_2015_250	17,881	0,302	1,122	3,693	0,006	0,104	0,104	568,299	0,027	0,012103448
Pumps	2015	251	500	Pumps_2015_500	27,722	0,273	1,134	3,272	0,005	0,097	0,097	568,299	0,024	0,010758621
Pumps	2015	501	750	Pumps_2015_750	47,213	0,281	1,134	3,389	0,005	0,099	0,099	568,299	0,025	0,011206897
Pumps	2015	1001	9999	Pumps_2015_9999	144,304	0,363	1,293	4,878	0,005	0,127	0,127	568,299	0,032	0,014344828
Pumps	2016	6	15	Pumps_2016_15	1,762	0,809	3,622	5,023	0,008	0,289	0,289	568,299	0,073	0,032724138
Pumps	2016	16	25	Pumps_2016_25	4,893	0,855	2,604	4,803	0,007	0,255	0,255	568,299	0,077	0,034517241
Pumps	2016	26	50	Pumps_2016_50	12,497	1,24	4,64	4,742	0,007	0,335	0,335	568,299	0,111	0,049758621
Pumps	2016	51	120	Pumps_2016_120	13,964	0,61	3,523	4,478	0,006	0,325	0,325	568,299	0,055	0,024655172
Pumps	2016	121	175	Pumps_2016_175	17,155	0,417	2,978	3,789	0,006	0,179	0,179	568,299	0,037	0,016586207
Pumps	2016	176	250	Pumps_2016_250	16,558	0,28	1,099	3,313	0,006	0,094	0,094	568,299	0,025	0,011206897
Pumps	2016	251	500	Pumps_2016_500	25,804	0,254	1,093	2,919	0,005	0,088	0,088	568,299	0,022	0,009862069
Pumps	2016	501	750	Pumps_2016_750	43,884	0,262	1,093	3,028	0,005	0,089	0,089	568,299	0,023	0,010310345
Pumps	2016	1001	9999	Pumps_2016_9999	133,448	0,335	1,223	4,596	0,005	0,116	0,116	568,3	0,03	0,013448276
Pumps	2017	6	15	Pumps_2017_15	1,713	0,786	3,599	4,887	0,008	0,272	0,272	568,299	0,07	0,03137931
Pumps	2017	16	25	Pumps_2017_25	4,745	0,83	2,564	4,729	0,007	0,243	0,243	568,299	0,074	0,033172414
Pumps	2017	26	50	Pumps_2017_50	11,12	1,104	4,514	4,578	0,007	0,301	0,301	568,299	0,099	0,04437931
Pumps	2017	51	120	Pumps_2017_120	12,49	0,546	3,495	4,134	0,006	0,287	0,287	568,299	0,049	0,021965517
Pumps	2017	121	175	Pumps_2017_175	15,466	0,376	2,975	3,4	0,006	0,159	0,159	568,299	0,033	0,014793103
Pumps	2017	176	250	Pumps_2017_250	15,375	0,26	1,08	2,958	0,006	0,084	0,084	568,299	0,023	0,010310345
Pumps	2017	251	500	Pumps_2017_500	24,243	0,239	1,062	2,613	0,005	0,079	0,079	568,299	0,021	0,009413793
Pumps	2017	501	750	Pumps_2017_750	40,958	0,244	1,062	2,695	0,005	0,08	0,08	568,299	0,022	0,009862069
Pumps	2017	1001	9999	Pumps_2017_9999	124,604	0,313	1,177	4,343	0,005	0,106	0,106	568,299	0,028	0,012551724
Pumps	2018	6	15	Pumps_2018_15	1,669	0,766	3,58	4,762	0,008	0,256	0,256	568,299	0,069	0,030931034
Pumps	2018	16	25	Pumps_2018_25	4,618	0,807	2,531	4,661	0,007	0,232	0,232	568,299	0,072	0,032275862
Pumps	2018	26	50	Pumps_2018_50	9,809	0,973	4,397	4,422	0,007	0,267	0,267	568,299	0,087	0,039
Pumps	2018	51	120	Pumps_2018_120	11,107	0,485	3,471	3,808	0,006	0,252	0,252	568,299	0,043	0,019275862
Pumps	2018	121	175	Pumps_2018_175	13,918	0,338	2,974	3,035	0,006	0,14	0,14	568,299	0,03	0,013448276
Pumps	2018	176	250	Pumps_2018_250	14,304	0,242	1,065	2,624	0,006	0,075	0,075	568,299	0,021	0,009413793
Pumps	2018	251	500	Pumps_2018_500	22,927	0,226	1,041	2,34	0,005	0,071	0,071	568,299	0,02	0,008965517
Pumps	2018	501	750	Pumps_2018_750	38,511	0,23	1,041	2,401	0,005	0,072	0,072	568,299	0,02	0,008965517
Pumps	2018	1001	9999	Pumps_2018_9999	116,529	0,293	1,144	4,105	0,005	0,098	0,098	568,299	0,026	0,011655172
Pumps	2019	6	15	Pumps_2019_15	1,63	0,748	3,562	4,647	0,008	0,241	0,241	568,3	0,067	0,030034483
Pumps	2019	16	25	Pumps_2019_25	4,503	0,787	2,501	4,596	0,007	0,222	0,222	568,3	0,071	0,031827586
Pumps	2019	26	50	Pumps_2019_50	8,56	0,849	4,284	4,269	0,007	0,235	0,235	568,299	0,076	0,034068966
Pumps	2019	51	120	Pumps_2019_120	9,812	0,429	3,449	3,497	0,006	0,217	0,217	568,299	0,038	0,017034483
Pumps	2019	121	175	Pumps_2019_175	12,706	0,309	2,974	2,711	0,006	0,124	0,124	568,299	0,027	0,012103448
Pumps	2019	176	250	Pumps_2019_250	13,378	0,226	1,052	2,323	0,006	0,067	0,067	568,299	0,02	0,008965517
Pumps	2019	251	500	Pumps_2019_500	21,711	0,214	1,027	2,084	0,005	0,064	0,064	568,3	0,019	0,008517241
Pumps	2019	501	750	Pumps_2019_750	36,35	0,217	1,027	2,133	0,005	0,065	0,065	568,299	0,019	0,008517241
Pumps	2019	1001	9999	Pumps_2019_9999	108,825	0,273	1,118	3,873	0,005	0,089	0,089	568,299	0,024	0,010758621
Pumps	2020	6	15	Pumps_2020_15	1,593	0,731	3,546	4,542	0,008	0,227	0,227	568,299	0,066	0,029586207
Pumps	2020	16	25	Pumps_2020_25	4,396	0,769	2,473	4,538	0,007	0,212	0,212	568,299	0,069	0,030931034
Pumps	2020	26	50	Pumps_2020_50	7,613	0,755	4,197	4,128	0,007	0,206	0,206	568,299	0,068	0,030482759
Pumps	2020	51	120	Pumps_2020_120	8,832	0,386	3,432	3,219	0,006	0,189	0,189	568,299	0,034	0,015241379
Pumps	2020	121	175	Pumps_2020_175	11,744	0,285	2,974	2,418	0,006	0,111	0,111	568,299	0,025	0,011206897
Pumps	2020	176	250	Pumps_2020_250	12,575	0,212	1,042	2,05	0,006	0,06	0,06	568,299	0,019	0,008517241
Pumps	2020	251	500	Pumps_2020_500	20,565	0,203	1,017	1,841	0,005	0,057	0,057	568,3	0,018	0,008068966
Pumps	2020	501	750	Pumps_2020_750	34,373	0,205	1,017	1,884	0,005	0,058	0,058	568,299	0,018	0,008068966
Pumps	2020	1001	9999	Pumps_2020_9999	101,462	0,255	1,096	3,649	0,005	0,081	0,081	568,3	0,023	0,010310345
Pumps	2021	6	15	Pumps_2021_15	1,563	0,717	3,531	4,462	0,008	0,214	0,214	568,299	0,064	0,028689655
Pumps	2021	16	25	Pumps_2021_25	4,302	0,752	2,446	4,497	0,007	0,201	0,201	568,299	0,067	0,030034483
Pumps	2021	26	50	Pumps_2021_50	6,761	0,671	4,099	3,966	0,007	0,175	0,175	568,299	0,06	0,026896552
Pumps	2021	51	120	Pumps_2021_120	7,94	0,347	3,412	2,928	0,006	0,162	0,162	568,3	0,031	0,013896552
Pumps	2021	121	175	Pumps_2021_175	10,713	0,26	2,968	2,101	0,006	0,096	0,096	568,299	0,023	0,010310345
Pumps	2021	176	250	Pumps_2021_250	11,658	0,197	1,031	1,759	0,006	0,052	0,052	568,299	0,017	0,00762069
Pumps	2021	251	500	Pumps_2021_500	19,186	0,189	1,007	1,584	0,005	0,05	0,05	568,299	0,017	0,00762069
Pumps	2021	501	750	Pumps_2021_750	32,005	0,191	1,007	1,618	0,005	0,05	0,05	568,299	0,017	0,00762069
Pumps	2021	1001	9999	Pumps_2021_9999	92,954	0,233	1,074	3,409	0,005	0,072	0,072	568,3	0,021	0,009413793
Pumps	2022	6	15	Pumps_2022_15	1,54	0,707	3,519	4,408	0,008	0,203	0,203	568,299	0,063	0,028241379
Pumps	2022	16	25	Pumps_2022_25	4,229	0,739	2,426	4,47	0,007	0,193	0,193	568,299	0,066	0,029586207
Pumps	2022	26	50	Pumps_2022_50	6,194	0,614	4,048	3,846	0,007	0,152	0,152	568,299	0,055	0,024655172
Pumps	2022	51	120	Pumps_2022_120	7,351	0,321	3,404	2,708	0,006	0,142	0,142	568,299	0,029	0,013
Pumps	2022	121	175	Pumps_2022_175	9,985	0,242	2,969	1,86	0,006	0,085	0,085	568,299	0,021	0,009413793
Pumps	2022	176	250	Pumps_2022_250	11,025	0,186	1,025	1,534	0,006	0,045	0,045	568,299	0,016	0,007172414
Pumps	2022	251	500	Pumps_2022_500	18,249	0,18	1,001	1,404	0,005	0,044	0,044	568,3	0,016	0,007172414
Pumps	2022	501	750	Pumps_2022_750	30,396	0,181	1,001	1,432	0,005	0,044	0,044	568,3	0,016	0,007172414
Pumps	2022	1001	9999	Pumps_2022_9999	87,313	0,219	1,058	3,236	0,005	0,065	0,065	568,299	0,019	0,008517241
Pumps	2023	6	15	Pumps_2023_15	1,521	0,698	3,508	4,359	0,008	0,194	0,194	568,299	0,063	0,028241379
Pumps	2023	16	25	Pumps_2023_25	4,165	0,728	2,407	4,447	0,007	0,186	0,186	568,299	0,065	0,029137931
Pumps	2023	26	50	Pumps_2023_50	5,699	0,565	4,007	3,734	0,007	0,131	0,131	568,299	0,051	0,022862069
Pumps	2023	51	120	Pumps_2023_120	6,838	0,299	3,398	2,511	0,006	0,123	0,123	568,299	0,026	0,011655172
Pumps	2023	121	175	Pumps_2023_175	9,349	0,227	2,971	1,662	0,006	0,075	0,075	568,299	0,02	0,008965517
Pumps	2023	176	250	Pumps_2023_250	10,47	0,177	1,021	1,351	0,006	0,04	0,04	568,299	0,015	0,006724138

Pumps	2023	251	500	Pumps_2023_500	17,411	0,171	0,998	1,246	0,005	0,038	0,038	568,3	0,015	0,006724138
Pumps	2023	501	750	Pumps_2023_750	28,971	0,173	0,998	1,271	0,005	0,039	0,039	568,299	0,015	0,006724138
Pumps	2023	1001	9999	Pumps_2023_9999	82,523	0,207	1,043	3,09	0,005	0,059	0,059	568,299	0,018	0,008068966
Pumps	2024	6	15	Pumps_2024_15	1,503	0,69	3,499	4,316	0,008	0,188	0,188	568,299	0,062	0,027793103
Pumps	2024	16	25	Pumps_2024_25	4,107	0,718	2,39	4,426	0,007	0,181	0,181	568,299	0,064	0,028689655
Pumps	2024	26	50	Pumps_2024_50	5,272	0,523	3,974	3,63	0,007	0,114	0,114	568,299	0,047	0,021068966
Pumps	2024	51	120	Pumps_2024_120	6,391	0,279	3,393	2,352	0,006	0,107	0,107	568,299	0,025	0,011206897
Pumps	2024	121	175	Pumps_2024_175	8,769	0,213	2,973	1,486	0,006	0,065	0,065	568,299	0,019	0,008517241
Pumps	2024	176	250	Pumps_2024_250	9,948	0,168	1,018	1,189	0,006	0,034	0,034	568,3	0,015	0,006724138
Pumps	2024	251	500	Pumps_2024_500	16,61	0,164	0,994	1,098	0,005	0,033	0,033	568,299	0,014	0,006275862
Pumps	2024	501	750	Pumps_2024_750	27,614	0,164	0,994	1,12	0,005	0,034	0,034	568,299	0,014	0,006275862
Pumps	2024	1001	9999	Pumps_2024_9999	78,184	0,196	1,031	2,96	0,005	0,054	0,054	568,299	0,017	0,00762069
Pumps	2025	6	15	Pumps_2025_15	1,488	0,683	3,491	4,278	0,008	0,183	0,183	568,299	0,061	0,027344828
Pumps	2025	16	25	Pumps_2025_25	4,058	0,709	2,376	4,407	0,007	0,177	0,177	568,299	0,064	0,028689655
Pumps	2025	26	50	Pumps_2025_50	4,891	0,485	3,943	3,528	0,007	0,099	0,099	568,299	0,043	0,019275862
Pumps	2025	51	120	Pumps_2025_120	5,988	0,261	3,389	2,213	0,006	0,092	0,092	568,299	0,023	0,010310345
Pumps	2025	121	175	Pumps_2025_175	8,209	0,199	2,974	1,318	0,006	0,056	0,056	568,3	0,018	0,008068966
Pumps	2025	176	250	Pumps_2025_250	9,449	0,159	1,016	1,038	0,006	0,029	0,029	568,299	0,014	0,006275862
Pumps	2025	251	500	Pumps_2025_500	15,837	0,156	0,992	0,958	0,005	0,028	0,028	568,3	0,014	0,006275862
Pumps	2025	501	750	Pumps_2025_750	26,308	0,157	0,992	0,977	0,005	0,029	0,029	568,3	0,014	0,006275862
Pumps	2025	1001	9999	Pumps_2025_9999	74,054	0,186	1,02	2,84	0,005	0,049	0,049	568,299	0,016	0,007172414
Pumps	2030	6	15	Pumps_2030_15	1,445	0,663	3,47	4,164	0,008	0,166	0,166	568,299	0,059	0,026448276
Pumps	2030	16	25	Pumps_2030_25	3,928	0,687	2,34	4,347	0,007	0,165	0,165	568,3	0,061	0,027344828
Pumps	2030	26	50	Pumps_2030_50	3,513	0,348	3,814	3,146	0,007	0,04	0,04	568,299	0,031	0,013896552
Pumps	2030	51	120	Pumps_2030_120	4,416	0,193	3,367	1,662	0,006	0,036	0,036	568,299	0,017	0,00762069
Pumps	2030	121	175	Pumps_2030_175	5,842	0,142	2,973	0,61	0,006	0,024	0,024	568,299	0,012	0,00537931
Pumps	2030	176	250	Pumps_2030_250	7,699	0,13	1,013	0,511	0,006	0,016	0,016	568,299	0,011	0,004931034
Pumps	2030	251	500	Pumps_2030_500	13,115	0,129	0,989	0,482	0,005	0,016	0,016	568,299	0,011	0,004931034
Pumps	2030	501	750	Pumps_2030_750	21,709	0,129	0,989	0,488	0,005	0,016	0,016	568,299	0,011	0,004931034
Pumps	2030	1001	9999	Pumps_2030_9999	55,475	0,139	0,99	2,504	0,005	0,03	0,03	568,299	0,012	0,00537931
Pumps	2035	6	15	Pumps_2035_15	1,44	0,661	3,469	4,143	0,008	0,162	0,162	568,299	0,059	0,026448276
Pumps	2035	16	25	Pumps_2035_25	3,919	0,685	2,34	4,332	0,007	0,162	0,162	568,299	0,061	0,027344828
Pumps	2035	26	50	Pumps_2035_50	3,089	0,306	3,778	3,028	0,007	0,019	0,019	568,299	0,027	0,012103448
Pumps	2035	51	120	Pumps_2035_120	3,891	0,17	3,36	1,47	0,006	0,017	0,017	568,299	0,015	0,006724138
Pumps	2035	121	175	Pumps_2035_175	5,059	0,123	2,973	0,377	0,006	0,014	0,014	568,299	0,011	0,004931034
Pumps	2035	176	250	Pumps_2035_250	7,07	0,119	1,012	0,335	0,006	0,011	0,011	568,299	0,01	0,004482759
Pumps	2035	251	500	Pumps_2035_500	12,118	0,119	0,989	0,331	0,005	0,011	0,011	568,299	0,01	0,004482759
Pumps	2035	501	750	Pumps_2035_750	20,034	0,119	0,989	0,331	0,005	0,011	0,011	568,299	0,01	0,004482759
Pumps	2035	1001	9999	Pumps_2035_9999	49,373	0,124	0,989	2,38	0,005	0,023	0,023	568,299	0,011	0,004931034
Pumps	2040	6	15	Pumps_2040_15	1,44	0,661	3,469	4,142	0,008	0,161	0,161	568,299	0,059	0,026448276
Pumps	2040	16	25	Pumps_2040_25	3,919	0,685	2,339	4,332	0,007	0,161	0,161	568,299	0,061	0,027344828
Pumps	2040	26	50	Pumps_2040_50	3,056	0,303	3,77	2,976	0,007	0,013	0,013	568,299	0,027	0,012103448
Pumps	2040	51	120	Pumps_2040_120	3,777	0,165	3,358	1,41	0,006	0,012	0,012	568,299	0,014	0,006275862
Pumps	2040	121	175	Pumps_2040_175	4,771	0,116	2,971	0,295	0,006	0,01	0,01	568,299	0,01	0,004482759
Pumps	2040	176	250	Pumps_2040_250	6,779	0,114	1,012	0,279	0,006	0,009	0,009	568,299	0,01	0,004482759
Pumps	2040	251	500	Pumps_2040_500	11,622	0,114	0,989	0,279	0,005	0,009	0,009	568,299	0,01	0,004482759
Pumps	2040	501	750	Pumps_2040_750	19,214	0,114	0,989	0,279	0,005	0,009	0,009	568,299	0,01	0,004482759
Pumps	2040	1001	9999	Pumps_2040_9999	46,343	0,116	0,989	2,347	0,005	0,02	0,02	568,299	0,01	0,004482759
Rollers	1990	6	15	Rollers_1990_15	4,21	1,804	4,999	9,999	1,049	0,975	0,975	568,299	0,162	0,07262069
Rollers	1990	16	25	Rollers_1990_25	10,903	2,213	4,999	6,919	0,855	0,741	0,741	568,299	0,199	0,089206897
Rollers	1990	26	50	Rollers_1990_50	45,466	4,738	9,598	7,927	0,871	1,256	1,256	568,299	0,427	0,191413793
Rollers	1990	51	120	Rollers_1990_120	51,677	2,372	5,756	15,111	0,791	1,332	1,332	568,3	0,214	0,095931034
Rollers	1990	121	175	Rollers_1990_175	75,451	1,889	5,165	14,858	0,758	1,046	1,046	568,299	0,17	0,076206897
Rollers	1990	176	250	Rollers_1990_250	106,808	1,889	5,165	14,858	0,758	1,046	1,046	568,299	0,17	0,076206897
Rollers	1990	251	500	Rollers_1990_500	135,093	1,669	11,266	14,103	0,662	0,896	0,896	568,299	0,15	0,067241379
Rollers	2000	6	15	Rollers_2000_15	3,444	1,475	4,49	8,242	0,079	0,676	0,676	568,3	0,133	0,05962069
Rollers	2000	16	25	Rollers_2000_25	9,648	1,958	4,53	6,358	0,065	0,563	0,563	568,299	0,176	0,078896552
Rollers	2000	26	50	Rollers_2000_50	38,643	4,027	8,379	6,941	0,066	0,861	0,861	568,299	0,363	0,162724138
Rollers	2000	51	120	Rollers_2000_120	39,062	1,793	4,585	10,425	0,06	0,844	0,844	568,299	0,161	0,072172414
Rollers	2000	121	175	Rollers_2000_175	48,357	1,21	3,749	9,501	0,057	0,503	0,503	568,299	0,109	0,048862069
Rollers	2000	176	250	Rollers_2000_250	59,24	1,047	3,108	9,211	0,057	0,427	0,427	568,299	0,094	0,042137931
Rollers	2000	251	500	Rollers_2000_500	77,413	0,956	5,254	8,821	0,05	0,379	0,379	568,299	0,086	0,038551724
Rollers	2005	6	15	Rollers_2005_15	1,788	0,766	3,469	5,228	0,079	0,361	0,361	568,299	0,069	0,030931034
Rollers	2005	16	25	Rollers_2005_25	4,53	0,919	2,642	5,412	0,065	0,347	0,347	568,299	0,082	0,036758621
Rollers	2005	26	50	Rollers_2005_50	34,997	3,647	7,864	6,51	0,066	0,808	0,808	568,299	0,329	0,147482759
Rollers	2005	51	120	Rollers_2005_120	34,046	1,563	4,289	8,963	0,06	0,79	0,79	568,299	0,141	0,063206897
Rollers	2005	121	175	Rollers_2005_175	40,854	1,023	3,44	8,18	0,057	0,441	0,441	568,299	0,092	0,041241379
Rollers	2005	176	250	Rollers_2005_250	44,594	0,788	2,262	7,822	0,057	0,319	0,319	568,299	0,071	0,031827586
Rollers	2005	251	500	Rollers_2005_500	56,466	0,697	3,183	7,196	0,05	0,282	0,282	568,299	0,062	0,027793103
Rollers	2010	6	15	Rollers_2010_15	1,637529	1,376	5,19619	5,58863	0,005	0,516	0,475	584,6125	0,17	0,076206897
Rollers	2010	16	25	Rollers_2010_25	1,637529	1,376	5,19619	5,58863	0,005	0,516	0,475	584,6125	0,17	0,076206897
Rollers	2010	26	50	Rollers_2010_50	1,637529	1,376	5,19619	5,58863	0,005	0,516	0,475	584,6125	0,17	0,076206897
Rollers	2010	51	120	Rollers_2010_120	0,983879	0,827	3,91429	7,50147	0,005	0,56	0,516	527,6279	0,154	0,069034483

Rollers	2010	121	175	Rollers_2010_175	0,511697	0,43	3,00505	5,60543	0,005	0,264	0,243	524,1952	0,153	0,068586207
Rollers	2010	176	250	Rollers_2010_250	0,616159	0,518	2,19572	7,34127	0,005	0,268	0,247	526,2539	0,153	0,068586207
Rollers	2010	251	500	Rollers_2010_500	0,682816	0,574	4,92169	7,52047	0,005	0,313	0,288	533,878	0,155	0,069482759
Rollers	2011	6	15	Rollers_2011_15	1,599963	1,344	5,18315	5,5647	0,005	0,508	0,467	583,1085	0,17	0,076206897
Rollers	2011	16	25	Rollers_2011_25	1,599963	1,344	5,18315	5,5647	0,005	0,508	0,467	583,1085	0,17	0,076206897
Rollers	2011	26	50	Rollers_2011_50	1,599963	1,344	5,18315	5,5647	0,005	0,508	0,467	583,1085	0,17	0,076206897
Rollers	2011	51	120	Rollers_2011_120	0,924436	0,777	3,86451	7,13388	0,005	0,533	0,491	525,9391	0,153	0,068586207
Rollers	2011	121	175	Rollers_2011_175	0,498798	0,419	3,00845	5,44712	0,005	0,257	0,237	522,9396	0,153	0,068586207
Rollers	2011	176	250	Rollers_2011_250	0,556319	0,467	2,03431	6,69107	0,005	0,242	0,222	524,8924	0,153	0,068586207
Rollers	2011	251	500	Rollers_2011_500	0,597293	0,502	4,46947	6,64358	0,005	0,275	0,253	529,5965	0,155	0,069482759
Rollers	2012	6	15	Rollers_2012_15	1,624226	1,365	5,26844	5,568	0,005	0,511	0,471	581,6678	0,17	0,076206897
Rollers	2012	16	25	Rollers_2012_25	1,624226	1,365	5,26844	5,568	0,005	0,511	0,471	581,6678	0,17	0,076206897
Rollers	2012	26	50	Rollers_2012_50	1,624226	1,365	5,26844	5,568	0,005	0,511	0,471	581,6678	0,17	0,076206897
Rollers	2012	51	120	Rollers_2012_120	0,924087	0,776	3,87893	7,08604	0,005	0,534	0,491	524,5269	0,153	0,068586207
Rollers	2012	121	175	Rollers_2012_175	0,497788	0,418	3,02294	5,38313	0,005	0,255	0,235	521,5511	0,153	0,068586207
Rollers	2012	176	250	Rollers_2012_250	0,555818	0,467	2,02691	6,64215	0,005	0,241	0,222	523,5608	0,153	0,068586207
Rollers	2012	251	500	Rollers_2012_500	0,604557	0,508	4,53336	6,66671	0,005	0,278	0,256	528,1357	0,155	0,069482759
Rollers	2013	6	15	Rollers_2013_15	1,5981	1,343	5,27142	5,50162	0,005	0,5	0,46	578,8662	0,17	0,076206897
Rollers	2013	16	25	Rollers_2013_25	1,5981	1,343	5,27142	5,50162	0,005	0,5	0,46	578,8662	0,17	0,076206897
Rollers	2013	26	50	Rollers_2013_50	1,5981	1,343	5,27142	5,50162	0,005	0,5	0,46	578,8662	0,17	0,076206897
Rollers	2013	51	120	Rollers_2013_120	0,873627	0,734	3,84356	6,74964	0,005	0,504	0,464	521,8163	0,153	0,068586207
Rollers	2013	121	175	Rollers_2013_175	0,468308	0,394	3,00794	5,11335	0,005	0,238	0,219	519,0689	0,153	0,068586207
Rollers	2013	176	250	Rollers_2013_250	0,495332	0,416	1,86858	5,94235	0,005	0,213	0,196	520,4083	0,153	0,068586207
Rollers	2013	251	500	Rollers_2013_500	0,470274	0,395	3,53436	5,43748	0,005	0,213	0,196	524,7654	0,154	0,069034483
Rollers	2014	6	15	Rollers_2014_15	1,556684	1,308	5,24275	5,39309	0,005	0,484	0,445	575,7953	0,17	0,076206897
Rollers	2014	16	25	Rollers_2014_25	1,556684	1,308	5,24275	5,39309	0,005	0,484	0,445	575,7953	0,17	0,076206897
Rollers	2014	26	50	Rollers_2014_50	1,556684	1,308	5,24275	5,39309	0,005	0,484	0,445	575,7953	0,17	0,076206897
Rollers	2014	51	120	Rollers_2014_120	0,827072	0,695	3,80915	6,39036	0,005	0,476	0,438	518,7866	0,153	0,068586207
Rollers	2014	121	175	Rollers_2014_175	0,43778	0,368	2,99804	4,72375	0,005	0,219	0,202	516,591	0,153	0,068586207
Rollers	2014	176	250	Rollers_2014_250	0,453642	0,381	1,75988	5,40344	0,005	0,191	0,176	517,8111	0,153	0,068586207
Rollers	2014	251	500	Rollers_2014_500	0,449616	0,378	3,3182	5,18322	0,005	0,202	0,185	522,0518	0,154	0,069034483
Rollers	2015	6	15	Rollers_2015_15	1,559602	1,31	5,29043	5,36547	0,005	0,481	0,443	569,9207	0,17	0,076206897
Rollers	2015	16	25	Rollers_2015_25	1,559602	1,31	5,29043	5,36547	0,005	0,481	0,443	569,9207	0,17	0,076206897
Rollers	2015	26	50	Rollers_2015_50	1,559602	1,31	5,29043	5,36547	0,005	0,481	0,443	569,9207	0,17	0,076206897
Rollers	2015	51	120	Rollers_2015_120	0,813228	0,683	3,80891	6,27158	0,005	0,467	0,43	513,5052	0,153	0,068586207
Rollers	2015	121	175	Rollers_2015_175	0,433087	0,364	3,00605	4,63035	0,005	0,215	0,198	511,3935	0,153	0,068586207
Rollers	2015	176	250	Rollers_2015_250	0,41293	0,347	1,65049	4,93191	0,005	0,171	0,157	512,8234	0,153	0,068586207
Rollers	2015	251	500	Rollers_2015_500	0,441373	0,371	3,24549	5,03147	0,005	0,195	0,179	517,2848	0,154	0,069034483
Rollers	2016	6	15	Rollers_2016_15	1,498736	1,259	5,23066	5,2356	0,005	0,459	0,423	563,9722	0,17	0,076206897
Rollers	2016	16	25	Rollers_2016_25	1,498736	1,259	5,23066	5,2356	0,005	0,459	0,423	563,9722	0,17	0,076206897
Rollers	2016	26	50	Rollers_2016_50	1,498736	1,259	5,23066	5,2356	0,005	0,459	0,423	563,9722	0,17	0,076206897
Rollers	2016	51	120	Rollers_2016_120	0,747631	0,628	3,75537	5,80563	0,005	0,428	0,393	508,1987	0,153	0,068586207
Rollers	2016	121	175	Rollers_2016_175	0,402004	0,338	2,99334	4,23872	0,005	0,197	0,181	505,9041	0,153	0,068586207
Rollers	2016	176	250	Rollers_2016_250	0,366563	0,308	1,50673	4,39492	0,005	0,15	0,138	507,6939	0,153	0,068586207
Rollers	2016	251	500	Rollers_2016_500	0,397483	0,334	2,95647	4,45617	0,005	0,173	0,159	513,4154	0,155	0,069482759
Rollers	2017	6	15	Rollers_2017_15	1,425352	1,198	5,14727	5,09771	0,005	0,436	0,401	555,0199	0,17	0,076206897
Rollers	2017	16	25	Rollers_2017_25	1,425352	1,198	5,14727	5,09771	0,005	0,436	0,401	555,0199	0,17	0,076206897
Rollers	2017	26	50	Rollers_2017_50	1,425352	1,198	5,14727	5,09771	0,005	0,436	0,401	555,0199	0,17	0,076206897
Rollers	2017	51	120	Rollers_2017_120	0,690109	0,58	3,71315	5,4114	0,005	0,392	0,361	500,1525	0,153	0,068586207
Rollers	2017	121	175	Rollers_2017_175	0,373471	0,314	2,98069	3,87384	0,005	0,18	0,166	497,9088	0,153	0,068586207
Rollers	2017	176	250	Rollers_2017_250	0,326364	0,274	1,40849	3,92097	0,005	0,129	0,119	499,7021	0,153	0,068586207
Rollers	2017	251	500	Rollers_2017_500	0,353236	0,297	2,68487	3,84047	0,005	0,15	0,138	505,8318	0,155	0,069482759
Rollers	2018	6	15	Rollers_2018_15	1,26668	1,064	4,92335	4,8416	0,005	0,387	0,356	546,2905	0,17	0,076206897
Rollers	2018	16	25	Rollers_2018_25	1,26668	1,064	4,92335	4,8416	0,005	0,387	0,356	546,2905	0,17	0,076206897
Rollers	2018	26	50	Rollers_2018_50	1,26668	1,064	4,92335	4,8416	0,005	0,387	0,356	546,2905	0,17	0,076206897
Rollers	2018	51	120	Rollers_2018_120	0,572467	0,481	3,60981	4,65049	0,005	0,32	0,294	492,2118	0,153	0,068586207
Rollers	2018	121	175	Rollers_2018_175	0,315632	0,265	2,94895	3,18126	0,005	0,147	0,135	490,1805	0,153	0,068586207
Rollers	2018	176	250	Rollers_2018_250	0,251419	0,211	1,24341	2,99492	0,005	0,094	0,086	491,6643	0,153	0,068586207
Rollers	2018	251	500	Rollers_2018_500	0,291314	0,245	2,23145	3,09814	0,005	0,119	0,11	497,9962	0,155	0,069482759
Rollers	2019	6	15	Rollers_2019_15	1,156606	0,972	4,77841	4,64491	0,005	0,349	0,321	537,546	0,17	0,076206897
Rollers	2019	16	25	Rollers_2019_25	1,156606	0,972	4,77841	4,64491	0,005	0,349	0,321	537,546	0,17	0,076206897
Rollers	2019	26	50	Rollers_2019_50	1,156606	0,972	4,77841	4,64491	0,005	0,349	0,321	537,546	0,17	0,076206897
Rollers	2019	51	120	Rollers_2019_120	0,502836	0,423	3,55726	4,17949	0,005	0,275	0,253	484,3362	0,153	0,068586207
Rollers	2019	121	175	Rollers_2019_175	0,27475	0,231	2,93251	2,69941	0,005	0,124	0,114	482,4531	0,153	0,068586207
Rollers	2019	176	250	Rollers_2019_250	0,250477	0,21	1,24854	2,88327	0,005	0,092	0,084	483,7769	0,153	0,068586207
Rollers	2019	251	500	Rollers_2019_500	0,278634	0,234	2,10142	2,90839	0,005	0,111	0,102	489,9774	0,155	0,069482759
Rollers	2020	6	15	Rollers_2020_15	1,102095	0,926	4,72504	4,53426	0,005	0,329	0,303	525,8798	0,17	0,076206897
Rollers	2020	16	25	Rollers_2020_25	1,102095	0,926	4,72504	4,53426	0,005	0,329	0,303	525,8798	0,17	0,076206897
Rollers	2020	26	50	Rollers_2020_50	1,102095	0,926	4,72504	4,53426	0,005	0,329	0,303	525,8798	0,17	0,076206897
Rollers	2020	51	120	Rollers_2020_120	0,462004	0,388	3,53135	3,88153	0,005	0,247	0,228	473,8594	0,153	0,068586207
Rollers	2020	121	175	Rollers_2020_175	0,256128	0,215	2,93333	2,45176	0,005	0,113	0,104	471,9177	0,153	0,068586207
Rollers	2020	176	250	Rollers_2020_250	0,248138	0,209	1,25343	2,75095	0,005	0,089	0,082	473,3669	0,153	0,068586207
Rollers	2020	251	500	Rollers_2020_500	0,279691	0,235	2,11346	2,82823	0,005	0,109	0,101	479,3254	0,155	0,069482759

Rollers	2021	6	15	Rollers_2021_15	1,008559	0,847	4,59681	4,35097	0,005	0,294	0,27	525,7908	0,17	0,076206897
Rollers	2021	16	25	Rollers_2021_25	1,008559	0,847	4,59681	4,35097	0,005	0,294	0,27	525,7908	0,17	0,076206897
Rollers	2021	26	50	Rollers_2021_50	1,008559	0,847	4,59681	4,35097	0,005	0,294	0,27	525,7908	0,17	0,076206897
Rollers	2021	51	120	Rollers_2021_120	0,42061	0,353	3,50719	3,5889	0,005	0,219	0,202	473,9012	0,153	0,068586207
Rollers	2021	121	175	Rollers_2021_175	0,229571	0,193	2,9256	2,11691	0,005	0,097	0,09	471,9799	0,153	0,068586207
Rollers	2021	176	250	Rollers_2021_250	0,23384	0,196	1,22849	2,49332	0,005	0,081	0,075	473,4704	0,153	0,068586207
Rollers	2021	251	500	Rollers_2021_500	0,26246	0,221	1,94995	2,58936	0,005	0,1	0,092	479,3294	0,155	0,069482759
Rollers	2022	6	15	Rollers_2022_15	0,878567	0,738	4,40241	4,12773	0,005	0,25	0,23	525,691	0,17	0,076206897
Rollers	2022	16	25	Rollers_2022_25	0,878567	0,738	4,40241	4,12773	0,005	0,25	0,23	525,691	0,17	0,076206897
Rollers	2022	26	50	Rollers_2022_50	0,878567	0,738	4,40241	4,12773	0,005	0,25	0,23	525,691	0,17	0,076206897
Rollers	2022	51	120	Rollers_2022_120	0,369089	0,31	3,46973	3,21896	0,005	0,186	0,171	473,9291	0,153	0,068586207
Rollers	2022	121	175	Rollers_2022_175	0,195547	0,164	2,91331	1,71408	0,005	0,079	0,072	471,9475	0,153	0,068586207
Rollers	2022	176	250	Rollers_2022_250	0,221959	0,187	1,22821	2,2116	0,005	0,077	0,071	473,5135	0,153	0,068586207
Rollers	2022	251	500	Rollers_2022_500	0,259221	0,218	1,95495	2,46341	0,005	0,097	0,089	478,9817	0,155	0,069482759
Rollers	2023	6	15	Rollers_2023_15	0,786211	0,661	4,25236	3,9211	0,005	0,212	0,195	525,8616	0,17	0,076206897
Rollers	2023	16	25	Rollers_2023_25	0,786211	0,661	4,25236	3,9211	0,005	0,212	0,195	525,8616	0,17	0,076206897
Rollers	2023	26	50	Rollers_2023_50	0,786211	0,661	4,25236	3,9211	0,005	0,212	0,195	525,8616	0,17	0,076206897
Rollers	2023	51	120	Rollers_2023_120	0,341189	0,287	3,45461	3,00302	0,005	0,165	0,152	473,9363	0,153	0,068586207
Rollers	2023	121	175	Rollers_2023_175	0,1784	0,15	2,90949	1,4833	0,005	0,068	0,062	471,9351	0,153	0,068586207
Rollers	2023	176	250	Rollers_2023_250	0,223864	0,188	1,23448	2,17272	0,005	0,076	0,07	473,5164	0,153	0,068586207
Rollers	2023	251	500	Rollers_2023_500	0,25159	0,211	1,95626	2,29003	0,005	0,093	0,085	478,3028	0,155	0,069482759
Rollers	2024	6	15	Rollers_2024_15	0,738433	0,62	4,20667	3,82449	0,005	0,192	0,177	525,9565	0,17	0,076206897
Rollers	2024	16	25	Rollers_2024_25	0,738433	0,62	4,20667	3,82449	0,005	0,192	0,177	525,9565	0,17	0,076206897
Rollers	2024	26	50	Rollers_2024_50	0,738433	0,62	4,20667	3,82449	0,005	0,192	0,177	525,9565	0,17	0,076206897
Rollers	2024	51	120	Rollers_2024_120	0,323417	0,272	3,45055	2,843	0,005	0,15	0,138	474,0072	0,153	0,068586207
Rollers	2024	121	175	Rollers_2024_175	0,168235	0,141	2,91426	1,32428	0,005	0,061	0,056	472,012	0,153	0,068586207
Rollers	2024	176	250	Rollers_2024_250	0,213553	0,179	1,21417	1,97675	0,005	0,07	0,064	473,512	0,153	0,068586207
Rollers	2024	251	500	Rollers_2024_500	0,24978	0,21	1,96121	2,21612	0,005	0,09	0,083	477,9001	0,155	0,069482759
Rollers	2025	6	15	Rollers_2025_15	0,677074	0,569	4,12543	3,68893	0,005	0,167	0,154	526,1406	0,17	0,076206897
Rollers	2025	16	25	Rollers_2025_25	0,677074	0,569	4,12543	3,68893	0,005	0,167	0,154	526,1406	0,17	0,076206897
Rollers	2025	26	50	Rollers_2025_50	0,677074	0,569	4,12543	3,68893	0,005	0,167	0,154	526,1406	0,17	0,076206897
Rollers	2025	51	120	Rollers_2025_120	0,303987	0,255	3,44432	2,69137	0,005	0,135	0,125	473,851	0,153	0,068586207
Rollers	2025	121	175	Rollers_2025_175	0,150791	0,127	2,90859	1,10088	0,005	0,049	0,045	471,9696	0,153	0,068586207
Rollers	2025	176	250	Rollers_2025_250	0,205768	0,173	1,21477	1,78252	0,005	0,066	0,06	473,6813	0,153	0,068586207
Rollers	2025	251	500	Rollers_2025_500	0,251787	0,212	1,96754	2,19998	0,005	0,09	0,083	477,5732	0,154	0,069034483
Rollers	2030	6	15	Rollers_2030_15	1,543	0,661	3,469	4,142	0,008	0,161	0,161	568,299	0,059	0,026448276
Rollers	2030	16	25	Rollers_2030_25	3,377	0,685	2,339	4,332	0,007	0,161	0,161	568,299	0,061	0,027344828
Rollers	2030	26	50	Rollers_2030_50	5,638	0,587	4,784	3,48	0,007	0,073	0,073	568,299	0,053	0,023758621
Rollers	2030	51	120	Rollers_2030_120	6,528	0,299	3,639	1,95	0,006	0,066	0,066	568,299	0,027	0,012103448
Rollers	2030	121	175	Rollers_2030_175	8,923	0,223	3,203	0,907	0,006	0,042	0,042	568,299	0,02	0,008965517
Rollers	2030	176	250	Rollers_2030_250	11,047	0,195	1,099	0,745	0,006	0,024	0,024	568,299	0,017	0,00762069
Rollers	2030	251	500	Rollers_2030_500	15,637	0,193	1,056	0,697	0,005	0,023	0,023	568,299	0,017	0,00762069
Rollers	2035	6	15	Rollers_2035_15	1,543	0,661	3,469	4,142	0,008	0,161	0,161	568,299	0,059	0,026448276
Rollers	2035	16	25	Rollers_2035_25	3,377	0,685	2,34	4,332	0,007	0,161	0,161	568,3	0,061	0,027344828
Rollers	2035	26	50	Rollers_2035_50	4,867	0,507	4,711	3,28	0,007	0,038	0,038	568,299	0,045	0,020172414
Rollers	2035	51	120	Rollers_2035_120	5,632	0,258	3,629	1,65	0,006	0,035	0,035	568,299	0,023	0,010310345
Rollers	2035	121	175	Rollers_2035_175	7,351	0,184	3,204	0,523	0,006	0,023	0,023	568,299	0,016	0,007172414
Rollers	2035	176	250	Rollers_2035_250	9,79	0,173	1,091	0,465	0,006	0,016	0,016	568,299	0,015	0,006724138
Rollers	2035	251	500	Rollers_2035_500	13,949	0,172	1,048	0,442	0,005	0,016	0,016	568,3	0,015	0,006724138
Rollers	2040	6	15	Rollers_2040_15	1,543	0,661	3,469	4,142	0,008	0,161	0,161	568,299	0,059	0,026448276
Rollers	2040	16	25	Rollers_2040_25	3,377	0,685	2,339	4,332	0,007	0,161	0,161	568,299	0,061	0,027344828
Rollers	2040	26	50	Rollers_2040_50	4,508	0,469	4,682	3,207	0,007	0,024	0,024	568,299	0,042	0,018827586
Rollers	2040	51	120	Rollers_2040_120	5,228	0,24	3,625	1,525	0,006	0,021	0,021	568,299	0,021	0,009413793
Rollers	2040	121	175	Rollers_2040_175	6,731	0,168	3,205	0,373	0,006	0,015	0,015	568,299	0,015	0,006724138
Rollers	2040	176	250	Rollers_2040_250	9,355	0,165	1,092	0,348	0,006	0,012	0,012	568,299	0,014	0,006275862
Rollers	2040	251	500	Rollers_2040_500	13,378	0,165	1,048	0,341	0,005	0,012	0,012	568,299	0,014	0,006275862
Rough Terrain Forklifts	1990	26	50	Rough Terrain Forklifts_1990_50	13,299	5,191	10,416	8,098	0,871	1,348	1,348	568,299	0,468	0,209793103
Rough Terrain Forklifts	1990	51	120	Rough Terrain Forklifts_1990_120	11,91	2,52	6,008	15,753	0,791	1,432	1,432	568,299	0,227	0,101758621
Rough Terrain Forklifts	1990	121	175	Rough Terrain Forklifts_1990_175	19,775	2,092	5,422	15,888	0,758	1,178	1,178	568,299	0,188	0,084275862
Rough Terrain Forklifts	1990	176	250	Rough Terrain Forklifts_1990_250	27,042	2,092	5,422	15,888	0,758	1,178	1,178	568,299	0,188	0,084275862
Rough Terrain Forklifts	1990	251	500	Rough Terrain Forklifts_1990_500	35,607	1,834	12,637	14,986	0,662	0,998	0,998	568,299	0,165	0,073965517
Rough Terrain Forklifts	2000	26	50	Rough Terrain Forklifts_2000_50	11,216	4,378	9,045	7,041	0,066	0,919	0,919	568,3	0,395	0,177068966
Rough Terrain Forklifts	2000	51	120	Rough Terrain Forklifts_2000_120	8,517	1,802	4,574	10,225	0,06	0,881	0,881	568,299	0,162	0,07262069
Rough Terrain Forklifts	2000	121	175	Rough Terrain Forklifts_2000_175	11,484	1,215	3,676	9,36	0,057	0,511	0,511	568,3	0,109	0,048862069
Rough Terrain Forklifts	2000	176	250	Rough Terrain Forklifts_2000_250	13,186	1,02	2,927	9,021	0,057	0,418	0,418	568,299	0,092	0,041241379
Rough Terrain Forklifts	2000	251	500	Rough Terrain Forklifts_2000_500	18,049	0,929	4,415	8,59	0,05	0,37	0,37	568,299	0,083	0,037206897
Rough Terrain Forklifts	2005	26	50	Rough Terrain Forklifts_2005_50	9,835	3,839	8,285	6,528	0,066	0,844	0,844	568,299	0,346	0,155103448
Rough Terrain Forklifts	2005	51	120	Rough Terrain Forklifts_2005_120	7,351	1,555	4,289	8,677	0,06	0,82	0,82	568,299	0,14	0,062758621
Rough Terrain Forklifts	2005	121	175	Rough Terrain Forklifts_2005_175	9,61	1,016	3,403	7,941	0,057	0,447	0,447	568,3	0,091	0,040793103
Rough Terrain Forklifts	2005	176	250	Rough Terrain Forklifts_2005_250	9,418	0,728	1,995	7,52	0,057	0,289	0,289	568,299	0,065	0,029137931
Rough Terrain Forklifts	2005	251	500	Rough Terrain Forklifts_2005_500	12,496	0,643	2,406	6,82	0,05	0,258	0,258	568,299	0,058	0,026
Rough Terrain Forklifts	2010	26	50	Rough Terrain Forklifts_2010_50	1,514602	1,273	4,9076	5,57504	0,005	0,495	0,455	583,8316	0,17	0,076206897
Rough Terrain Forklifts	2010	51	120	Rough Terrain Forklifts_2010_120	0,607871	0,511	3,47103	5,81073	0,005	0,386	0,355	525,5318	0,153	0,068586207

Rough Terrain Forklifts	2010	121	175	Rough Terrain Forklifts_2010_175	0,37661	0,316	2,9137	4,78775	0,005	0,212	0,195	524,1127	0,153	0,068586207
Rough Terrain Forklifts	2010	176	250	Rough Terrain Forklifts_2010_250	0,759196	0,638	2,86785	7,87723	0,005	0,351	0,323	527,6921	0,154	0,069034483
Rough Terrain Forklifts	2010	251	500	Rough Terrain Forklifts_2010_500	0,386691	0,325	1,82955	5,79984	0,005	0,168	0,155	518,8116	0,151	0,067689655
Rough Terrain Forklifts	2011	26	50	Rough Terrain Forklifts_2011_50	1,444446	1,214	4,83823	5,52279	0,005	0,48	0,442	582,3751	0,17	0,076206897
Rough Terrain Forklifts	2011	51	120	Rough Terrain Forklifts_2011_120	0,549079	0,461	3,4365	5,4371	0,005	0,352	0,324	524,0504	0,153	0,068586207
Rough Terrain Forklifts	2011	121	175	Rough Terrain Forklifts_2011_175	0,339518	0,285	2,87624	4,45534	0,005	0,193	0,177	522,735	0,153	0,068586207
Rough Terrain Forklifts	2011	176	250	Rough Terrain Forklifts_2011_250	0,686556	0,577	2,63351	7,1588	0,005	0,317	0,292	525,8441	0,153	0,068586207
Rough Terrain Forklifts	2011	251	500	Rough Terrain Forklifts_2011_500	0,390538	0,328	1,84589	5,81691	0,005	0,17	0,156	517,5182	0,151	0,067689655
Rough Terrain Forklifts	2012	26	50	Rough Terrain Forklifts_2012_50	1,441034	1,211	4,88018	5,49331	0,005	0,476	0,438	580,9231	0,17	0,076206897
Rough Terrain Forklifts	2012	51	120	Rough Terrain Forklifts_2012_120	0,530399	0,446	3,43501	5,29115	0,005	0,34	0,312	522,6299	0,153	0,068586207
Rough Terrain Forklifts	2012	121	175	Rough Terrain Forklifts_2012_175	0,336361	0,283	2,88643	4,38447	0,005	0,189	0,174	521,4414	0,153	0,068586207
Rough Terrain Forklifts	2012	176	250	Rough Terrain Forklifts_2012_250	0,693119	0,582	2,65596	7,11155	0,005	0,319	0,293	524,4406	0,153	0,068586207
Rough Terrain Forklifts	2012	251	500	Rough Terrain Forklifts_2012_500	0,394706	0,332	1,86253	5,83389	0,005	0,171	0,157	516,2249	0,151	0,067689655
Rough Terrain Forklifts	2013	26	50	Rough Terrain Forklifts_2013_50	1,427232	1,199	4,88715	5,34043	0,005	0,454	0,417	578,2559	0,17	0,076206897
Rough Terrain Forklifts	2013	51	120	Rough Terrain Forklifts_2013_120	0,469882	0,395	3,39906	4,92337	0,005	0,299	0,275	519,906	0,153	0,068586207
Rough Terrain Forklifts	2013	121	175	Rough Terrain Forklifts_2013_175	0,283862	0,239	2,86094	3,90677	0,005	0,153	0,141	518,7027	0,153	0,068586207
Rough Terrain Forklifts	2013	176	250	Rough Terrain Forklifts_2013_250	0,418518	0,352	1,88921	4,79966	0,005	0,184	0,169	521,6392	0,153	0,068586207
Rough Terrain Forklifts	2013	251	500	Rough Terrain Forklifts_2013_500	0,334838	0,281	1,86541	4,62017	0,005	0,141	0,129	514,2815	0,151	0,067689655
Rough Terrain Forklifts	2014	26	50	Rough Terrain Forklifts_2014_50	1,40671	1,182	4,88713	5,22634	0,005	0,436	0,401	575,3526	0,17	0,076206897
Rough Terrain Forklifts	2014	51	120	Rough Terrain Forklifts_2014_120	0,417386	0,351	3,36705	4,46728	0,005	0,261	0,24	517,2602	0,153	0,068586207
Rough Terrain Forklifts	2014	121	175	Rough Terrain Forklifts_2014_175	0,263476	0,221	2,85182	3,59442	0,005	0,139	0,128	516,0907	0,153	0,068586207
Rough Terrain Forklifts	2014	176	250	Rough Terrain Forklifts_2014_250	0,221616	0,186	1,21218	2,98369	0,005	0,087	0,08	517,7663	0,153	0,068586207
Rough Terrain Forklifts	2014	251	500	Rough Terrain Forklifts_2014_500	0,202465	0,17	0,95399	3,49973	0,005	0,076	0,07	511,6567	0,151	0,067689655
Rough Terrain Forklifts	2015	26	50	Rough Terrain Forklifts_2015_50	1,414803	1,189	4,93325	5,18984	0,005	0,431	0,397	569,4875	0,17	0,076206897
Rough Terrain Forklifts	2015	51	120	Rough Terrain Forklifts_2015_120	0,401892	0,338	3,36619	4,28003	0,005	0,247	0,228	512,0859	0,153	0,068586207
Rough Terrain Forklifts	2015	121	175	Rough Terrain Forklifts_2015_175	0,25808	0,217	2,85917	3,42042	0,005	0,133	0,122	510,8541	0,153	0,068586207
Rough Terrain Forklifts	2015	176	250	Rough Terrain Forklifts_2015_250	0,166466	0,14	1,01164	2,4626	0,005	0,058	0,054	512,1638	0,153	0,068586207
Rough Terrain Forklifts	2015	251	500	Rough Terrain Forklifts_2015_500	0,207111	0,174	0,95822	3,52067	0,005	0,077	0,071	506,4349	0,151	0,067689655
Rough Terrain Forklifts	2016	26	50	Rough Terrain Forklifts_2016_50	1,378654	1,158	4,91773	5,09924	0,005	0,415	0,382	563,3598	0,17	0,076206897
Rough Terrain Forklifts	2016	51	120	Rough Terrain Forklifts_2016_120	0,358928	0,302	3,34169	3,84005	0,005	0,213	0,196	507,0659	0,153	0,068586207
Rough Terrain Forklifts	2016	121	175	Rough Terrain Forklifts_2016_175	0,248476	0,209	2,865	3,2087	0,005	0,124	0,114	505,596	0,153	0,068586207
Rough Terrain Forklifts	2016	176	250	Rough Terrain Forklifts_2016_250	0,171278	0,144	1,0177	2,46843	0,005	0,059	0,054	506,8956	0,153	0,068586207
Rough Terrain Forklifts	2016	251	500	Rough Terrain Forklifts_2016_500	0,211667	0,178	0,96236	3,54169	0,005	0,078	0,072	501,2134	0,151	0,067689655
Rough Terrain Forklifts	2017	26	50	Rough Terrain Forklifts_2017_50	1,318488	1,108	4,83344	4,90253	0,005	0,382	0,352	554,6234	0,17	0,076206897
Rough Terrain Forklifts	2017	51	120	Rough Terrain Forklifts_2017_120	0,322506	0,271	3,31778	3,41759	0,005	0,182	0,167	499,1682	0,153	0,068586207
Rough Terrain Forklifts	2017	121	175	Rough Terrain Forklifts_2017_175	0,231401	0,194	2,86636	2,90167	0,005	0,112	0,103	497,7766	0,153	0,068586207
Rough Terrain Forklifts	2017	176	250	Rough Terrain Forklifts_2017_250	0,175965	0,148	1,02362	2,47389	0,005	0,059	0,054	499,0007	0,153	0,068586207
Rough Terrain Forklifts	2017	251	500	Rough Terrain Forklifts_2017_500	0,216551	0,182	0,96636	3,56771	0,005	0,079	0,073	493,3362	0,151	0,067689655
Rough Terrain Forklifts	2018	26	50	Rough Terrain Forklifts_2018_50	1,273116	1,07	4,76839	4,73469	0,005	0,359	0,33	545,8693	0,17	0,076206897
Rough Terrain Forklifts	2018	51	120	Rough Terrain Forklifts_2018_120	0,264415	0,222	3,26976	2,84496	0,005	0,136	0,125	491,2107	0,153	0,068586207
Rough Terrain Forklifts	2018	121	175	Rough Terrain Forklifts_2018_175	0,194786	0,164	2,84245	2,34168	0,005	0,088	0,081	489,9869	0,153	0,068586207
Rough Terrain Forklifts	2018	176	250	Rough Terrain Forklifts_2018_250	0,181003	0,152	1,02948	2,48748	0,005	0,06	0,055	491,0997	0,153	0,068586207
Rough Terrain Forklifts	2018	251	500	Rough Terrain Forklifts_2018_500	0,172771	0,145	0,95802	2,70063	0,005	0,06	0,055	485,9543	0,151	0,067689655
Rough Terrain Forklifts	2019	26	50	Rough Terrain Forklifts_2019_50	1,200779	1,009	4,67405	4,55745	0,005	0,328	0,301	537,3287	0,17	0,076206897
Rough Terrain Forklifts	2019	51	120	Rough Terrain Forklifts_2019_120	0,240277	0,202	3,25848	2,6222	0,005	0,117	0,107	483,3105	0,153	0,068586207
Rough Terrain Forklifts	2019	121	175	Rough Terrain Forklifts_2019_175	0,177689	0,149	2,84092	2,05752	0,005	0,075	0,069	482,1188	0,153	0,068586207
Rough Terrain Forklifts	2019	176	250	Rough Terrain Forklifts_2019_250	0,130153	0,109	0,97423	1,63905	0,005	0,036	0,033	483,0882	0,153	0,068586207
Rough Terrain Forklifts	2019	251	500	Rough Terrain Forklifts_2019_500	0,138302	0,116	0,95034	1,96109	0,005	0,043	0,039	477,2539	0,151	0,067689655
Rough Terrain Forklifts	2020	26	50	Rough Terrain Forklifts_2020_50	1,188595	0,999	4,68594	4,4946	0,005	0,316	0,291	525,6222	0,17	0,076206897
Rough Terrain Forklifts	2020	51	120	Rough Terrain Forklifts_2020_120	0,225188	0,189	3,25575	2,45218	0,005	0,103	0,094	472,9842	0,153	0,068586207
Rough Terrain Forklifts	2020	121	175	Rough Terrain Forklifts_2020_175	0,170092	0,143	2,84466	1,86888	0,005	0,068	0,063	471,7152	0,153	0,068586207
Rough Terrain Forklifts	2020	176	250	Rough Terrain Forklifts_2020_250	0,132727	0,112	0,97848	1,60906	0,005	0,037	0,034	472,5671	0,153	0,068586207
Rough Terrain Forklifts	2020	251	500	Rough Terrain Forklifts_2020_500	0,105484	0,089	0,94184	1,30199	0,005	0,028	0,026	465,7709	0,151	0,067689655
Rough Terrain Forklifts	2021	26	50	Rough Terrain Forklifts_2021_50	1,152538	0,968	4,65658	4,41145	0,005	0,304	0,279	525,3844	0,17	0,076206897
Rough Terrain Forklifts	2021	51	120	Rough Terrain Forklifts_2021_120	0,207836	0,175	3,25191	2,28534	0,005	0,089	0,081	473,11	0,153	0,068586207
Rough Terrain Forklifts	2021	121	175	Rough Terrain Forklifts_2021_175	0,154972	0,13	2,8447	1,61661	0,005	0,06	0,055	471,7575	0,153	0,068586207
Rough Terrain Forklifts	2021	176	250	Rough Terrain Forklifts_2021_250	0,136824	0,115	0,98379	1,61186	0,005	0,037	0,034	472,5469	0,153	0,068586207
Rough Terrain Forklifts	2021	251	500	Rough Terrain Forklifts_2021_500	0,109168	0,092	0,94604	1,30199	0,005	0,028	0,026	465,7442	0,151	0,067689655
Rough Terrain Forklifts	2022	26	50	Rough Terrain Forklifts_2022_50	0,93878	0,789	4,3038	4,04131	0,005	0,238	0,219	525,0151	0,17	0,076206897
Rough Terrain Forklifts	2022	51	120	Rough Terrain Forklifts_2022_120	0,18871	0,159	3,24374	2,0983	0,005	0,073	0,067	473,089	0,153	0,068586207
Rough Terrain Forklifts	2022	121	175	Rough Terrain Forklifts_2022_175	0,142314	0,12	2,84439	1,40475	0,005	0,051	0,047	471,6773	0,153	0,068586207
Rough Terrain Forklifts	2022	176	250	Rough Terrain Forklifts_2022_250	0,140994	0,118	0,98924	1,61688	0,005	0,037	0,034	472,5408	0,153	0,068586207
Rough Terrain Forklifts	2022	251	500	Rough Terrain Forklifts_2022_500	0,081218	0,068	0,93709	0,55798	0,005	0,009	0,008	466,5598	0,151	0,067689655
Rough Terrain Forklifts	2023	26	50	Rough Terrain Forklifts_2023_50	0,82158	0,69	4,12519	3,85338	0,005	0,204	0,187	524,8024	0,17	0,076206897
Rough Terrain Forklifts	2023	51	120	Rough Terrain Forklifts_2023_120	0,178416	0,15	3,24217	1,9836	0,005	0,064	0,059	473,1584	0,153	0,068586207
Rough Terrain Forklifts	2023	121	175	Rough Terrain Forklifts_2023_175	0,132417	0,111	2,84289	1,21796	0,005	0,043	0,04	471,6217	0,153	0,068586207
Rough Terrain Forklifts	2023	176	250	Rough Terrain Forklifts_2023_250	0,137509	0,116	0,98987	1,47399	0,005	0,034	0,032	472,7784	0,153	0,068586207
Rough Terrain Forklifts	2023	251	500	Rough Terrain Forklifts_2023_500	0,082146	0,069	0,93788	0,55845	0,005	0,009	0,008	466,554	0,151	0,067689655
Rough Terrain Forklifts	2024	26	50	Rough Terrain Forklifts_2024_50	0,678189	0,57	3,91822	3,65343	0,005	0,166	0,152	524,9235	0,17	0,076206897
Rough Terrain Forklifts	2024	51	120	Rough Terrain Forklifts_2024_120	0,172725	0,145	3,24468	1,91392	0,005	0,058	0,054	473,0631	0,153	0,068586207
Rough Terrain Forklifts	2024	121	175	Rough Terrain Forklifts_2024_175	0,122467	0,103	2,83416	1,04413	0,005	0,039	0,035	471,5346	0,153	0,068586207
Rough Terrain Forklifts	2024	176	250	Rough Terrain Forklifts_2024_250	0,141528	0,119	0,99524	1,48012	0,005	0,035	0,032	472,8527	0,153	0,068586207
Rough Terrain Forklifts	2024	251	500	Rough Terrain Forklifts_2024_500	0,078846	0,066	0,93746	0,47582	0,005	0,009	0,008	466,5479	0,151	0,067689655

Rough Terrain Forklifts	2025	26	50	Rough Terrain Forklifts_2025_50	0,542352	0,456	3,74002	3,47668	0,005	0,128	0,118	525,027	0,17	0,076206897
Rough Terrain Forklifts	2025	51	120	Rough Terrain Forklifts_2025_120	0,16354	0,137	3,23971	1,82053	0,005	0,051	0,047	473,0366	0,153	0,068586207
Rough Terrain Forklifts	2025	121	175	Rough Terrain Forklifts_2025_175	0,103861	0,087	2,82091	0,78628	0,005	0,03	0,028	471,4745	0,152	0,068137931
Rough Terrain Forklifts	2025	176	250	Rough Terrain Forklifts_2025_250	0,145736	0,122	1,00073	1,48888	0,005	0,035	0,033	472,9267	0,153	0,068586207
Rough Terrain Forklifts	2025	251	500	Rough Terrain Forklifts_2025_500	0,081817	0,069	0,94151	0,47663	0,005	0,009	0,008	466,5414	0,151	0,067689655
Rough Terrain Forklifts	2030	26	50	Rough Terrain Forklifts_2030_50	1,404	0,548	5,031	3,359	0,007	0,039	0,039	568,299	0,049	0,021965517
Rough Terrain Forklifts	2030	51	120	Rough Terrain Forklifts_2030_120	1,321	0,279	3,725	1,671	0,006	0,034	0,034	568,299	0,025	0,011206897
Rough Terrain Forklifts	2030	121	175	Rough Terrain Forklifts_2030_175	1,898	0,2	3,291	0,537	0,006	0,023	0,023	568,299	0,018	0,008068966
Rough Terrain Forklifts	2030	176	250	Rough Terrain Forklifts_2030_250	2,47	0,191	1,121	0,463	0,006	0,016	0,016	568,299	0,017	0,00762069
Rough Terrain Forklifts	2030	251	500	Rough Terrain Forklifts_2030_500	3,702	0,19	1,07	0,443	0,005	0,016	0,016	568,3	0,017	0,00762069
Rough Terrain Forklifts	2035	26	50	Rough Terrain Forklifts_2035_50	1,335	0,521	5,011	3,267	0,007	0,022	0,022	568,299	0,047	0,021068966
Rough Terrain Forklifts	2035	51	120	Rough Terrain Forklifts_2035_120	1,24	0,262	3,722	1,53	0,006	0,02	0,02	568,299	0,023	0,010310345
Rough Terrain Forklifts	2035	121	175	Rough Terrain Forklifts_2035_175	1,742	0,184	3,292	0,364	0,006	0,015	0,015	568,299	0,016	0,007172414
Rough Terrain Forklifts	2035	176	250	Rough Terrain Forklifts_2035_250	2,346	0,181	1,121	0,334	0,006	0,012	0,012	568,299	0,016	0,007172414
Rough Terrain Forklifts	2035	251	500	Rough Terrain Forklifts_2035_500	3,524	0,181	1,071	0,331	0,005	0,012	0,012	568,3	0,016	0,007172414
Rough Terrain Forklifts	2040	26	50	Rough Terrain Forklifts_2040_50	1,331	0,519	5,01	3,228	0,007	0,017	0,017	568,3	0,046	0,02062069
Rough Terrain Forklifts	2040	51	120	Rough Terrain Forklifts_2040_120	1,222	0,258	3,722	1,485	0,006	0,016	0,016	568,299	0,023	0,010310345
Rough Terrain Forklifts	2040	121	175	Rough Terrain Forklifts_2040_175	1,687	0,178	3,292	0,303	0,006	0,012	0,012	568,3	0,016	0,007172414
Rough Terrain Forklifts	2040	176	250	Rough Terrain Forklifts_2040_250	2,296	0,177	1,121	0,292	0,006	0,011	0,011	568,299	0,016	0,007172414
Rough Terrain Forklifts	2040	251	500	Rough Terrain Forklifts_2040_500	3,449	0,177	1,071	0,292	0,005	0,011	0,011	568,299	0,016	0,007172414
Rubber Tired Dozers	1990	121	175	Rubber Tired Dozers_1990_175	6,172	1,886	5,29	14,831	0,758	1,059	1,059	568,299	0,17	0,076206897
Rubber Tired Dozers	1990	176	250	Rubber Tired Dozers_1990_250	8,746	1,886	5,29	14,831	0,758	1,059	1,059	568,299	0,17	0,076206897
Rubber Tired Dozers	1990	251	500	Rubber Tired Dozers_1990_500	11,084	1,655	12,26	13,986	0,662	0,899	0,899	568,299	0,149	0,066793103
Rubber Tired Dozers	1990	501	750	Rubber Tired Dozers_1990_750	16,688	1,655	12,26	13,986	1,018	0,915	0,915	568,3	0,149	0,066793103
Rubber Tired Dozers	1990	751	1000	Rubber Tired Dozers_1990_1000	24,619	1,645	12,26	13,986	1,018	0,903	0,903	568,299	0,148	0,066344828
Rubber Tired Dozers	2000	121	175	Rubber Tired Dozers_2000_175	4,761	1,454	4,295	10,881	0,057	0,624	0,624	568,299	0,131	0,058724138
Rubber Tired Dozers	2000	176	250	Rubber Tired Dozers_2000_250	6,043	1,303	3,733	10,625	0,057	0,548	0,548	568,299	0,117	0,052448276
Rubber Tired Dozers	2000	251	500	Rubber Tired Dozers_2000_500	7,775	1,161	6,982	10,023	0,05	0,474	0,474	568,299	0,104	0,04662069
Rubber Tired Dozers	2000	501	750	Rubber Tired Dozers_2000_750	11,706	1,161	6,982	10,023	0,052	0,474	0,474	568,3	0,104	0,04662069
Rubber Tired Dozers	2000	751	1000	Rubber Tired Dozers_2000_1000	17,842	1,192	7,415	10,456	0,052	0,451	0,451	568,3	0,107	0,047965517
Rubber Tired Dozers	2005	121	175	Rubber Tired Dozers_2005_175	4,21	1,286	4,026	9,666	0,057	0,567	0,567	568,299	0,116	0,052
Rubber Tired Dozers	2005	176	250	Rubber Tired Dozers_2005_250	4,912	1,059	2,99	9,344	0,057	0,437	0,437	568,299	0,095	0,042586207
Rubber Tired Dozers	2005	251	500	Rubber Tired Dozers_2005_500	6,277	0,937	5,159	8,574	0,05	0,38	0,38	568,299	0,084	0,037655172
Rubber Tired Dozers	2005	501	750	Rubber Tired Dozers_2005_750	9,496	0,942	5,15	8,694	0,052	0,382	0,382	568,299	0,085	0,038103448
Rubber Tired Dozers	2005	751	1000	Rubber Tired Dozers_2005_1000	14,937	0,998	5,524	9,444	0,052	0,369	0,369	568,299	0,09	0,040344828
Rubber Tired Dozers	2010	121	175	Rubber Tired Dozers_2010_175	1,12265	0,943	4,17063	9,78349	0,005	0,555	0,511	526,3128	0,153	0,068586207
Rubber Tired Dozers	2010	176	250	Rubber Tired Dozers_2010_250	0,840919	0,707	2,68761	8,22344	0,005	0,394	0,362	527,9126	0,154	0,069034483
Rubber Tired Dozers	2010	251	500	Rubber Tired Dozers_2010_500	0,88356	0,742	6,7191	8,70703	0,005	0,406	0,374	533,1476	0,155	0,069482759
Rubber Tired Dozers	2010	501	750	Rubber Tired Dozers_2010_750	0,619996	0,521	3,1214	7,42352	0,005	0,269	0,248	525,7054	0,153	0,068586207
Rubber Tired Dozers	2010	751	1000	Rubber Tired Dozers_2010_1000	12,178	0,814	4,027	8,149	0,005	0,29	0,29	568,299	0,073	0,032724138
Rubber Tired Dozers	2011	121	175	Rubber Tired Dozers_2011_175	1,128595	0,948	4,18594	9,7992	0,005	0,557	0,513	524,9639	0,153	0,068586207
Rubber Tired Dozers	2011	176	250	Rubber Tired Dozers_2011_250	0,852039	0,716	2,69892	8,24976	0,005	0,396	0,364	526,5967	0,154	0,069034483
Rubber Tired Dozers	2011	251	500	Rubber Tired Dozers_2011_500	0,878525	0,738	6,65601	8,60406	0,005	0,402	0,37	532,0871	0,155	0,069482759
Rubber Tired Dozers	2011	501	750	Rubber Tired Dozers_2011_750	0,62921	0,529	3,13084	7,4622	0,005	0,272	0,25	524,3841	0,153	0,068586207
Rubber Tired Dozers	2011	751	1000	Rubber Tired Dozers_2011_1000	11,693	0,781	3,772	7,805	0,005	0,276	0,276	568,299	0,07	0,03137931
Rubber Tired Dozers	2012	121	175	Rubber Tired Dozers_2012_175	1,133798	0,953	4,1998	9,81194	0,005	0,559	0,515	523,6318	0,153	0,068586207
Rubber Tired Dozers	2012	176	250	Rubber Tired Dozers_2012_250	0,862577	0,725	2,70943	8,27234	0,005	0,398	0,366	525,281	0,154	0,069034483
Rubber Tired Dozers	2012	251	500	Rubber Tired Dozers_2012_500	0,883165	0,742	6,62489	8,58436	0,005	0,401	0,369	530,6589	0,155	0,069482759
Rubber Tired Dozers	2012	501	750	Rubber Tired Dozers_2012_750	0,635938	0,534	3,13648	7,48052	0,005	0,274	0,252	523,0626	0,153	0,068586207
Rubber Tired Dozers	2012	751	1000	Rubber Tired Dozers_2012_1000	11,228	0,75	3,531	7,474	0,005	0,262	0,262	568,299	0,067	0,030034483
Rubber Tired Dozers	2013	121	175	Rubber Tired Dozers_2013_175	1,138698	0,957	4,21297	9,82334	0,005	0,561	0,516	520,9836	0,153	0,068586207
Rubber Tired Dozers	2013	176	250	Rubber Tired Dozers_2013_250	0,859983	0,723	2,71092	8,10695	0,005	0,395	0,363	522,6456	0,154	0,069034483
Rubber Tired Dozers	2013	251	500	Rubber Tired Dozers_2013_500	0,864011	0,726	6,42295	8,33658	0,005	0,39	0,359	527,9093	0,155	0,069482759
Rubber Tired Dozers	2013	501	750	Rubber Tired Dozers_2013_750	0,641687	0,539	3,14069	7,49129	0,005	0,275	0,253	520,4266	0,153	0,068586207
Rubber Tired Dozers	2013	751	1000	Rubber Tired Dozers_2013_1000	10,78	0,72	3,306	7,155	0,005	0,249	0,249	568,299	0,065	0,029137931
Rubber Tired Dozers	2014	121	175	Rubber Tired Dozers_2014_175	1,143391	0,961	4,22564	9,83401	0,005	0,563	0,518	518,335	0,153	0,068586207
Rubber Tired Dozers	2014	176	250	Rubber Tired Dozers_2014_250	0,858402	0,721	2,71199	7,97218	0,005	0,392	0,361	520,0105	0,154	0,069034483
Rubber Tired Dozers	2014	251	500	Rubber Tired Dozers_2014_500	0,841688	0,707	6,16471	8,05819	0,005	0,376	0,346	524,6758	0,155	0,069482759
Rubber Tired Dozers	2014	501	750	Rubber Tired Dozers_2014_750	0,610646	0,513	2,75605	7,14705	0,005	0,258	0,237	517,7903	0,153	0,068586207
Rubber Tired Dozers	2014	751	1000	Rubber Tired Dozers_2014_1000	10,347	0,691	3,096	6,849	0,005	0,236	0,236	568,3	0,062	0,027793103
Rubber Tired Dozers	2015	121	175	Rubber Tired Dozers_2015_175	1,147937	0,965	4,23794	9,84425	0,005	0,564	0,519	513,0549	0,153	0,068586207
Rubber Tired Dozers	2015	176	250	Rubber Tired Dozers_2015_250	0,866859	0,728	2,7204	7,9837	0,005	0,394	0,362	514,7359	0,154	0,069034483
Rubber Tired Dozers	2015	251	500	Rubber Tired Dozers_2015_500	0,842228	0,708	6,10151	7,99736	0,005	0,373	0,343	519,1472	0,155	0,069482759
Rubber Tired Dozers	2015	501	750	Rubber Tired Dozers_2015_750	0,616719	0,518	2,76062	7,15777	0,005	0,259	0,238	512,5253	0,153	0,068586207
Rubber Tired Dozers	2015	751	1000	Rubber Tired Dozers_2015_1000	9,895	0,661	2,901	6,556	0,005	0,222	0,222	568,299	0,059	0,026448276
Rubber Tired Dozers	2016	121	175	Rubber Tired Dozers_2016_175	1,152013	0,968	4,24901	9,85328	0,005	0,566	0,52	507,7744	0,153	0,068586207
Rubber Tired Dozers	2016	176	250	Rubber Tired Dozers_2016_250	0,875531	0,736	2,72943	7,99508	0,005	0,395	0,364	509,4615	0,154	0,069034483
Rubber Tired Dozers	2016	251	500	Rubber Tired Dozers_2016_500	0,819146	0,688	5,82829	7,71034	0,005	0,359	0,33	513,3109	0,155	0,069482759
Rubber Tired Dozers	2016	501	750	Rubber Tired Dozers_2016_750	0,622662	0,523	2,7651	7,16821	0,005	0,26	0,239	507,2601	0,153	0,068586207
Rubber Tired Dozers	2016	751	1000	Rubber Tired Dozers_2016_1000	9,45	0,631	2,723	6,277	0,005	0,208	0,208	568,3	0,057	0,025551724
Rubber Tired Dozers	2017	121	175	Rubber Tired Dozers_2017_175	1,074198	0,903	4,14895	9,12915	0,005	0,525	0,483	499,4096	0,153	0,068586207
Rubber Tired Dozers	2017	176	250	Rubber Tired Dozers_2017_250	0,840865	0,707	2,65514	7,67081	0,005	0,375	0,345	501,5475	0,154	0,069034483
Rubber Tired Dozers	2017	251	500	Rubber Tired Dozers_2017_500	0,787455	0,662	5,52569	7,33345	0,005	0,341	0,313	505,8493	0,155	0,069482759

Rubber Tired Dozers	2017	501	750	Rubber Tired Dozers_2017_750	0,625767	0,526	2,76746	7,17226	0,005	0,26	0,239	499,3665	0,153	0,068586207
Rubber Tired Dozers	2017	751	1000	Rubber Tired Dozers_2017_1000	9,018	0,602	2,56	6,013	0,005	0,195	0,195	568,299	0,054	0,024206897
Rubber Tired Dozers	2018	121	175	Rubber Tired Dozers_2018_175	0,954751	0,802	3,98965	8,02079	0,005	0,46	0,424	491,4921	0,153	0,068586207
Rubber Tired Dozers	2018	176	250	Rubber Tired Dozers_2018_250	0,796398	0,669	2,51156	7,20787	0,005	0,35	0,322	493,6337	0,154	0,069034483
Rubber Tired Dozers	2018	251	500	Rubber Tired Dozers_2018_500	0,71175	0,598	4,98205	6,50184	0,005	0,3	0,276	498,1862	0,155	0,069482759
Rubber Tired Dozers	2018	501	750	Rubber Tired Dozers_2018_750	0,602699	0,506	2,75902	6,72652	0,005	0,248	0,228	491,4726	0,153	0,068586207
Rubber Tired Dozers	2018	751	1000	Rubber Tired Dozers_2018_1000	8,6	0,574	2,413	5,764	0,005	0,183	0,183	568,299	0,051	0,022862069
Rubber Tired Dozers	2019	121	175	Rubber Tired Dozers_2019_175	0,90312	0,759	3,94854	7,52037	0,005	0,433	0,398	483,5585	0,153	0,068586207
Rubber Tired Dozers	2019	176	250	Rubber Tired Dozers_2019_250	0,774882	0,651	2,45855	6,92923	0,005	0,338	0,311	485,172	0,154	0,069034483
Rubber Tired Dozers	2019	251	500	Rubber Tired Dozers_2019_500	0,680848	0,572	4,74309	6,14335	0,005	0,283	0,26	490,383	0,155	0,069482759
Rubber Tired Dozers	2019	501	750	Rubber Tired Dozers_2019_750	0,541107	0,455	2,59814	6,12249	0,005	0,218	0,201	483,5786	0,153	0,068586207
Rubber Tired Dozers	2019	751	1000	Rubber Tired Dozers_2019_1000	8,196	0,547	2,281	5,528	0,005	0,171	0,171	568,299	0,049	0,021965517
Rubber Tired Dozers	2020	121	175	Rubber Tired Dozers_2020_175	0,864425	0,726	3,89288	7,18525	0,005	0,411	0,378	473,0116	0,153	0,068586207
Rubber Tired Dozers	2020	176	250	Rubber Tired Dozers_2020_250	0,737248	0,619	2,37104	6,50332	0,005	0,318	0,293	474,7928	0,154	0,069034483
Rubber Tired Dozers	2020	251	500	Rubber Tired Dozers_2020_500	0,636621	0,535	4,41134	5,64089	0,005	0,259	0,238	479,7569	0,155	0,069482759
Rubber Tired Dozers	2020	501	750	Rubber Tired Dozers_2020_750	0,543245	0,456	2,60108	6,12255	0,005	0,218	0,201	473,0562	0,153	0,068586207
Rubber Tired Dozers	2020	751	1000	Rubber Tired Dozers_2020_1000	7,811	0,522	2,164	5,306	0,005	0,16	0,16	568,299	0,047	0,021068966
Rubber Tired Dozers	2021	121	175	Rubber Tired Dozers_2021_175	0,822557	0,691	3,84814	6,79037	0,005	0,386	0,355	472,9751	0,153	0,068586207
Rubber Tired Dozers	2021	176	250	Rubber Tired Dozers_2021_250	0,714624	0,6	2,31719	6,29617	0,005	0,306	0,281	474,7984	0,154	0,069034483
Rubber Tired Dozers	2021	251	500	Rubber Tired Dozers_2021_500	0,585817	0,492	4,04107	5,081	0,005	0,232	0,214	478,9868	0,155	0,069482759
Rubber Tired Dozers	2021	501	750	Rubber Tired Dozers_2021_750	0,545338	0,458	2,60396	6,12254	0,005	0,218	0,201	473,0459	0,153	0,068586207
Rubber Tired Dozers	2021	751	1000	Rubber Tired Dozers_2021_1000	7,448	0,497	2,057	5,095	0,005	0,15	0,15	568,299	0,044	0,019724138
Rubber Tired Dozers	2022	121	175	Rubber Tired Dozers_2022_175	0,714312	0,6	3,75194	5,80781	0,005	0,326	0,3	473,9122	0,153	0,068586207
Rubber Tired Dozers	2022	176	250	Rubber Tired Dozers_2022_250	0,571708	0,48	2,05563	5,04648	0,005	0,24	0,22	474,6166	0,154	0,069034483
Rubber Tired Dozers	2022	251	500	Rubber Tired Dozers_2022_500	0,565033	0,475	3,89489	4,80775	0,005	0,22	0,202	479,3107	0,155	0,069482759
Rubber Tired Dozers	2022	501	750	Rubber Tired Dozers_2022_750	0,547387	0,46	2,60677	6,12245	0,005	0,218	0,201	473,035	0,153	0,068586207
Rubber Tired Dozers	2022	751	1000	Rubber Tired Dozers_2022_1000	7,106	0,475	1,961	4,896	0,005	0,14	0,14	568,299	0,042	0,018827586
Rubber Tired Dozers	2023	121	175	Rubber Tired Dozers_2023_175	0,700073	0,588	3,7664	5,65638	0,005	0,316	0,291	473,9009	0,153	0,068586207
Rubber Tired Dozers	2023	176	250	Rubber Tired Dozers_2023_250	0,467601	0,393	1,78266	4,09011	0,005	0,184	0,169	474,5967	0,153	0,068586207
Rubber Tired Dozers	2023	251	500	Rubber Tired Dozers_2023_500	0,531484	0,447	3,68617	4,40835	0,005	0,202	0,185	479,4678	0,155	0,069482759
Rubber Tired Dozers	2023	501	750	Rubber Tired Dozers_2023_750	0,502999	0,423	2,59131	5,33389	0,005	0,196	0,18	473,0234	0,153	0,068586207
Rubber Tired Dozers	2023	751	1000	Rubber Tired Dozers_2023_1000	6,786	0,453	1,874	4,709	0,005	0,131	0,131	568,299	0,04	0,017931034
Rubber Tired Dozers	2024	121	175	Rubber Tired Dozers_2024_175	0,633623	0,532	3,69636	5,0144	0,005	0,279	0,257	473,5147	0,153	0,068586207
Rubber Tired Dozers	2024	176	250	Rubber Tired Dozers_2024_250	0,474702	0,399	1,79685	4,0904	0,005	0,184	0,17	474,5854	0,153	0,068586207
Rubber Tired Dozers	2024	251	500	Rubber Tired Dozers_2024_500	0,495724	0,417	3,45746	4,03046	0,005	0,182	0,168	479,3938	0,155	0,069482759
Rubber Tired Dozers	2024	501	750	Rubber Tired Dozers_2024_750	0,506146	0,425	2,59604	5,33372	0,005	0,196	0,18	473,0111	0,153	0,068586207
Rubber Tired Dozers	2024	751	1000	Rubber Tired Dozers_2024_1000	6,485	0,433	1,796	4,532	0,005	0,123	0,123	568,299	0,039	0,017482759
Rubber Tired Dozers	2025	121	175	Rubber Tired Dozers_2025_175	0,548636	0,461	3,61238	4,22886	0,005	0,23	0,212	474,1029	0,153	0,068586207
Rubber Tired Dozers	2025	176	250	Rubber Tired Dozers_2025_250	0,442605	0,372	1,72032	3,80547	0,005	0,167	0,153	474,5734	0,153	0,068586207
Rubber Tired Dozers	2025	251	500	Rubber Tired Dozers_2025_500	0,436562	0,367	2,95895	3,36957	0,005	0,151	0,139	479,0915	0,155	0,069482759
Rubber Tired Dozers	2025	501	750	Rubber Tired Dozers_2025_750	0,509225	0,428	2,60066	5,33346	0,005	0,196	0,18	472,9981	0,153	0,068586207
Rubber Tired Dozers	2025	751	1000	Rubber Tired Dozers_2025_1000	6,203	0,414	1,725	4,365	0,005	0,115	0,115	568,299	0,037	0,016586207
Rubber Tired Dozers	2030	121	175	Rubber Tired Dozers_2030_175	1,303	0,398	3,496	2,034	0,006	0,111	0,111	568,299	0,035	0,015689655
Rubber Tired Dozers	2030	176	250	Rubber Tired Dozers_2030_250	1,556	0,335	1,322	1,828	0,006	0,069	0,069	568,299	0,03	0,013448276
Rubber Tired Dozers	2030	251	500	Rubber Tired Dozers_2030_500	2,16	0,322	1,401	1,658	0,005	0,064	0,064	568,299	0,029	0,013
Rubber Tired Dozers	2030	501	750	Rubber Tired Dozers_2030_750	3,261	0,323	1,401	1,694	0,005	0,064	0,064	568,299	0,029	0,013
Rubber Tired Dozers	2030	751	1000	Rubber Tired Dozers_2030_1000	5,063	0,338	1,465	3,676	0,005	0,082	0,082	568,299	0,03	0,013448276
Rubber Tired Dozers	2035	121	175	Rubber Tired Dozers_2035_175	1,054	0,322	3,481	1,345	0,006	0,071	0,071	568,299	0,029	0,013
Rubber Tired Dozers	2035	176	250	Rubber Tired Dozers_2035_250	1,326	0,286	1,262	1,203	0,006	0,046	0,046	568,299	0,025	0,011206897
Rubber Tired Dozers	2035	251	500	Rubber Tired Dozers_2035_500	1,868	0,279	1,279	1,107	0,005	0,043	0,043	568,3	0,025	0,011206897
Rubber Tired Dozers	2035	501	750	Rubber Tired Dozers_2035_750	2,816	0,279	1,279	1,126	0,005	0,043	0,043	568,299	0,025	0,011206897
Rubber Tired Dozers	2035	751	1000	Rubber Tired Dozers_2035_1000	4,306	0,287	1,312	3,204	0,005	0,06	0,06	568,299	0,025	0,011206897
Rubber Tired Dozers	2040	121	175	Rubber Tired Dozers_2040_175	0,9	0,275	3,47	0,903	0,006	0,045	0,045	568,299	0,024	0,010758621
Rubber Tired Dozers	2040	176	250	Rubber Tired Dozers_2040_250	1,176	0,253	1,225	0,81	0,006	0,031	0,031	568,299	0,022	0,009862069
Rubber Tired Dozers	2040	251	500	Rubber Tired Dozers_2040_500	1,672	0,249	1,198	0,758	0,005	0,029	0,029	568,299	0,022	0,009862069
Rubber Tired Dozers	2040	501	750	Rubber Tired Dozers_2040_750	2,519	0,25	1,198	0,767	0,005	0,029	0,029	568,3	0,022	0,009862069
Rubber Tired Dozers	2040	751	1000	Rubber Tired Dozers_2040_1000	3,814	0,254	1,218	2,91	0,005	0,045	0,045	568,3	0,023	0,010310345
Rubber Tired Loaders	1990	16	25	Rubber Tired Loaders_1990_25	5,92	2,213	4,999	6,919	0,855	0,741	0,741	568,299	0,199	0,089206897
Rubber Tired Loaders	1990	26	50	Rubber Tired Loaders_1990_50	23,869	4,848	9,805	7,964	0,871	1,279	1,279	568,299	0,437	0,195896552
Rubber Tired Loaders	1990	51	120	Rubber Tired Loaders_1990_120	22,055	2,368	5,728	14,978	0,791	1,345	1,345	568,299	0,213	0,095482759
Rubber Tired Loaders	1990	121	175	Rubber Tired Loaders_1990_175	30,1	1,791	5,094	14,294	0,758	0,995	0,995	568,299	0,161	0,072172414
Rubber Tired Loaders	1990	176	250	Rubber Tired Loaders_1990_250	42,179	1,791	5,094	14,294	0,758	0,995	0,995	568,3	0,161	0,072172414
Rubber Tired Loaders	1990	251	500	Rubber Tired Loaders_1990_500	59,295	1,583	11,282	13,545	0,662	0,851	0,851	568,3	0,142	0,063655172
Rubber Tired Loaders	1990	501	750	Rubber Tired Loaders_1990_750	121,471	1,583	11,282	13,545	1,018	0,867	0,867	568,299	0,142	0,063655172
Rubber Tired Loaders	1990	751	1000	Rubber Tired Loaders_1990_1000	147,851	1,575	11,282	13,545	1,018	0,858	0,858	568,299	0,142	0,063655172
Rubber Tired Loaders	2000	16	25	Rubber Tired Loaders_2000_25	5,105	1,908	4,438	6,326	0,065	0,555	0,555	568,299	0,172	0,077103448
Rubber Tired Loaders	2000	26	50	Rubber Tired Loaders_2000_50	21,853	4,439	9,15	7,065	0,066	0,928	0,928	568,299	0,4	0,179310345
Rubber Tired Loaders	2000	51	120	Rubber Tired Loaders_2000_120	17,155	1,842	4,652	10,433	0,06	0,896	0,896	568,299	0,166	0,074413793
Rubber Tired Loaders	2000	121	175	Rubber Tired Loaders_2000_175	20,951	1,246	3,765	9,552	0,057	0,526	0,526	568,299	0,112	0,050206897
Rubber Tired Loaders	2000	176	250	Rubber Tired Loaders_2000_250	24,776	1,052	3,019	9,216	0,057	0,433	0,433	568,299	0,094	0,042137931
Rubber Tired Loaders	2000	251	500	Rubber Tired Loaders_2000_500	35,779	0,955	4,797	8,766	0,05	0,381	0,381	568,299	0,086	0,038551724
Rubber Tired Loaders	2000	501	750	Rubber Tired Loaders_2000_750	73,296	0,955	4,797	8,766	0,052	0,381	0,381	568,299	0,086	0,038551724
Rubber Tired Loaders	2000	751	1000	Rubber Tired Loaders_2000_1000	95,549	1,018	5,369	9,342	0,052	0,372	0,372	568,299	0,091	0,040793103

Rubber Tired Loaders	2005	16	25	Rubber Tired Loaders_2005_25	2,273	0,849	2,519	5,321	0,065	0,333	0,333	568,299	0,076	0,034068966
Rubber Tired Loaders	2005	26	50	Rubber Tired Loaders_2005_50	19,43	3,947	8,471	6,59	0,066	0,86	0,86	568,299	0,356	0,159586207
Rubber Tired Loaders	2005	51	120	Rubber Tired Loaders_2005_120	14,973	1,608	4,379	8,954	0,06	0,841	0,841	568,3	0,145	0,065
Rubber Tired Loaders	2005	121	175	Rubber Tired Loaders_2005_175	17,677	1,052	3,496	8,183	0,057	0,464	0,464	568,299	0,094	0,042137931
Rubber Tired Loaders	2005	176	250	Rubber Tired Loaders_2005_250	18,23	0,774	2,143	7,781	0,057	0,31	0,31	568,3	0,069	0,030931034
Rubber Tired Loaders	2005	251	500	Rubber Tired Loaders_2005_500	25,602	0,683	2,836	7,066	0,05	0,275	0,275	568,3	0,061	0,027344828
Rubber Tired Loaders	2005	501	750	Rubber Tired Loaders_2005_750	53,332	0,695	2,831	7,236	0,052	0,278	0,278	568,299	0,062	0,027793103
Rubber Tired Loaders	2005	751	1000	Rubber Tired Loaders_2005_1000	74,257	0,791	3,279	8,232	0,052	0,275	0,275	568,299	0,071	0,031827586
Rubber Tired Loaders	2010	16	25	Rubber Tired Loaders_2010_25	2,807425	2,359	7,88269	6,29919	0,005	0,734	0,675	581,9969	0,169	0,075758621
Rubber Tired Loaders	2010	26	50	Rubber Tired Loaders_2010_50	2,807425	2,359	7,88269	6,29919	0,005	0,734	0,675	581,9969	0,169	0,075758621
Rubber Tired Loaders	2010	51	120	Rubber Tired Loaders_2010_120	1,132276	0,951	4,28386	7,85298	0,005	0,68	0,626	519,5038	0,151	0,067689655
Rubber Tired Loaders	2010	121	175	Rubber Tired Loaders_2010_175	0,772004	0,649	3,56499	7,01127	0,005	0,387	0,356	523,9006	0,152	0,068137931
Rubber Tired Loaders	2010	176	250	Rubber Tired Loaders_2010_250	0,475737	0,4	1,50852	5,94632	0,005	0,199	0,183	522,3501	0,152	0,068137931
Rubber Tired Loaders	2010	251	500	Rubber Tired Loaders_2010_500	0,495122	0,416	2,61599	5,66307	0,005	0,211	0,194	521,885	0,152	0,068137931
Rubber Tired Loaders	2010	501	750	Rubber Tired Loaders_2010_750	0,454547	0,382	2,10254	5,06362	0,005	0,197	0,181	507,2864	0,148	0,066344828
Rubber Tired Loaders	2010	751	1000	Rubber Tired Loaders_2010_1000	0,464861	0,391	1,45926	6,63966	0,005	0,187	0,172	523,2526	0,152	0,068137931
Rubber Tired Loaders	2011	16	25	Rubber Tired Loaders_2011_25	2,679774	2,252	7,77095	6,24779	0,005	0,711	0,654	581,4262	0,17	0,076206897
Rubber Tired Loaders	2011	26	50	Rubber Tired Loaders_2011_50	2,679774	2,252	7,77095	6,24779	0,005	0,711	0,654	581,4262	0,17	0,076206897
Rubber Tired Loaders	2011	51	120	Rubber Tired Loaders_2011_120	1,113092	0,935	4,28739	7,68957	0,005	0,671	0,618	517,9363	0,151	0,067689655
Rubber Tired Loaders	2011	121	175	Rubber Tired Loaders_2011_175	0,757164	0,636	3,57219	6,81375	0,005	0,378	0,348	522,5315	0,152	0,068137931
Rubber Tired Loaders	2011	176	250	Rubber Tired Loaders_2011_250	0,481296	0,404	1,50155	5,87694	0,005	0,197	0,181	520,9732	0,152	0,068137931
Rubber Tired Loaders	2011	251	500	Rubber Tired Loaders_2011_500	0,501144	0,421	2,56846	5,5868	0,005	0,209	0,192	520,154	0,152	0,068137931
Rubber Tired Loaders	2011	501	750	Rubber Tired Loaders_2011_750	0,472712	0,397	2,12943	5,09397	0,005	0,2	0,184	505,881	0,148	0,066344828
Rubber Tired Loaders	2011	751	1000	Rubber Tired Loaders_2011_1000	0,476526	0,4	1,47057	6,69396	0,005	0,191	0,176	521,9232	0,152	0,068137931
Rubber Tired Loaders	2012	16	25	Rubber Tired Loaders_2012_25	2,730745	2,295	7,96233	6,30427	0,005	0,724	0,666	579,9785	0,17	0,076206897
Rubber Tired Loaders	2012	26	50	Rubber Tired Loaders_2012_50	2,730745	2,295	7,96233	6,30427	0,005	0,724	0,666	579,9785	0,17	0,076206897
Rubber Tired Loaders	2012	51	120	Rubber Tired Loaders_2012_120	1,113822	0,936	4,31845	7,65616	0,005	0,671	0,617	516,6239	0,151	0,067689655
Rubber Tired Loaders	2012	121	175	Rubber Tired Loaders_2012_175	0,765409	0,643	3,60616	6,79567	0,005	0,38	0,349	521,0995	0,152	0,068137931
Rubber Tired Loaders	2012	176	250	Rubber Tired Loaders_2012_250	0,492248	0,414	1,51119	5,85805	0,005	0,198	0,182	519,646	0,152	0,068137931
Rubber Tired Loaders	2012	251	500	Rubber Tired Loaders_2012_500	0,515336	0,433	2,59983	5,58714	0,005	0,211	0,194	518,7236	0,152	0,068137931
Rubber Tired Loaders	2012	501	750	Rubber Tired Loaders_2012_750	0,485752	0,408	2,14848	5,07921	0,005	0,201	0,185	504,6824	0,148	0,066344828
Rubber Tired Loaders	2012	751	1000	Rubber Tired Loaders_2012_1000	0,48616	0,409	1,47877	6,73245	0,005	0,194	0,178	520,592	0,152	0,068137931
Rubber Tired Loaders	2013	16	25	Rubber Tired Loaders_2013_25	2,60616	2,19	7,83573	6,18494	0,005	0,695	0,64	577,0156	0,17	0,076206897
Rubber Tired Loaders	2013	26	50	Rubber Tired Loaders_2013_50	2,60616	2,19	7,83573	6,18494	0,005	0,695	0,64	577,0156	0,17	0,076206897
Rubber Tired Loaders	2013	51	120	Rubber Tired Loaders_2013_120	1,087575	0,914	4,31523	7,47698	0,005	0,654	0,602	513,9368	0,151	0,067689655
Rubber Tired Loaders	2013	121	175	Rubber Tired Loaders_2013_175	0,750707	0,631	3,60722	6,6063	0,005	0,369	0,339	518,3787	0,152	0,068137931
Rubber Tired Loaders	2013	176	250	Rubber Tired Loaders_2013_250	0,496511	0,417	1,5142	5,75293	0,005	0,196	0,181	516,9736	0,152	0,068137931
Rubber Tired Loaders	2013	251	500	Rubber Tired Loaders_2013_500	0,517428	0,435	2,55447	5,4738	0,005	0,208	0,191	515,9429	0,152	0,068137931
Rubber Tired Loaders	2013	501	750	Rubber Tired Loaders_2013_750	0,49047	0,412	2,0823	4,99146	0,005	0,199	0,183	502,8589	0,148	0,066344828
Rubber Tired Loaders	2013	751	1000	Rubber Tired Loaders_2013_1000	0,484243	0,407	1,45163	6,66719	0,005	0,193	0,178	517,9506	0,152	0,068137931
Rubber Tired Loaders	2014	16	25	Rubber Tired Loaders_2014_25	2,51646	2,115	7,7699	6,10324	0,005	0,676	0,622	573,5218	0,169	0,075758621
Rubber Tired Loaders	2014	26	50	Rubber Tired Loaders_2014_50	2,51646	2,115	7,7699	6,10324	0,005	0,676	0,622	573,5218	0,169	0,075758621
Rubber Tired Loaders	2014	51	120	Rubber Tired Loaders_2014_120	1,032758	0,868	4,26762	7,12932	0,005	0,619	0,569	510,0099	0,151	0,067689655
Rubber Tired Loaders	2014	121	175	Rubber Tired Loaders_2014_175	0,720145	0,605	3,58536	6,27196	0,005	0,35	0,322	515,7685	0,152	0,068137931
Rubber Tired Loaders	2014	176	250	Rubber Tired Loaders_2014_250	0,483874	0,407	1,48551	5,49539	0,005	0,187	0,172	514,2167	0,152	0,068137931
Rubber Tired Loaders	2014	251	500	Rubber Tired Loaders_2014_500	0,501158	0,421	2,40656	5,19438	0,005	0,196	0,18	512,5095	0,151	0,067689655
Rubber Tired Loaders	2014	501	750	Rubber Tired Loaders_2014_750	0,483251	0,406	1,94616	4,81047	0,005	0,19	0,175	499,6952	0,148	0,066344828
Rubber Tired Loaders	2014	751	1000	Rubber Tired Loaders_2014_1000	0,492279	0,414	1,45724	6,69249	0,005	0,195	0,179	515,307	0,152	0,068137931
Rubber Tired Loaders	2015	16	25	Rubber Tired Loaders_2015_25	2,508512	2,108	7,83443	6,11232	0,005	0,675	0,621	567,672	0,169	0,075758621
Rubber Tired Loaders	2015	26	50	Rubber Tired Loaders_2015_50	2,508512	2,108	7,83443	6,11232	0,005	0,675	0,621	567,672	0,169	0,075758621
Rubber Tired Loaders	2015	51	120	Rubber Tired Loaders_2015_120	1,018295	0,856	4,27362	7,01153	0,005	0,606	0,558	505,0231	0,151	0,067689655
Rubber Tired Loaders	2015	121	175	Rubber Tired Loaders_2015_175	0,708161	0,595	3,58815	6,09735	0,005	0,341	0,313	510,4677	0,152	0,068137931
Rubber Tired Loaders	2015	176	250	Rubber Tired Loaders_2015_250	0,482642	0,406	1,47986	5,36927	0,005	0,183	0,169	508,9127	0,152	0,068137931
Rubber Tired Loaders	2015	251	500	Rubber Tired Loaders_2015_500	0,494223	0,415	2,33208	5,0195	0,005	0,19	0,174	506,3723	0,151	0,067689655
Rubber Tired Loaders	2015	501	750	Rubber Tired Loaders_2015_750	0,469822	0,395	1,78908	4,55578	0,005	0,179	0,165	495,31	0,148	0,066344828
Rubber Tired Loaders	2015	751	1000	Rubber Tired Loaders_2015_1000	0,499538	0,42	1,46167	6,71262	0,005	0,197	0,181	510,0449	0,152	0,068137931
Rubber Tired Loaders	2016	16	25	Rubber Tired Loaders_2016_25	2,445921	2,055	7,79111	6,05258	0,005	0,66	0,607	561,9032	0,169	0,075758621
Rubber Tired Loaders	2016	26	50	Rubber Tired Loaders_2016_50	2,445921	2,055	7,79111	6,05258	0,005	0,66	0,607	561,9032	0,169	0,075758621
Rubber Tired Loaders	2016	51	120	Rubber Tired Loaders_2016_120	0,955142	0,803	4,21236	6,58334	0,005	0,565	0,52	499,5935	0,151	0,067689655
Rubber Tired Loaders	2016	121	175	Rubber Tired Loaders_2016_175	0,67267	0,565	3,56236	5,72558	0,005	0,319	0,294	505,1308	0,152	0,068137931
Rubber Tired Loaders	2016	176	250	Rubber Tired Loaders_2016_250	0,468005	0,393	1,45212	5,1151	0,005	0,174	0,16	503,6542	0,152	0,068137931
Rubber Tired Loaders	2016	251	500	Rubber Tired Loaders_2016_500	0,465473	0,391	2,15506	4,62743	0,005	0,174	0,16	500,4314	0,151	0,067689655
Rubber Tired Loaders	2016	501	750	Rubber Tired Loaders_2016_750	0,443728	0,373	1,70263	4,17165	0,005	0,164	0,151	491,9183	0,148	0,066344828
Rubber Tired Loaders	2016	751	1000	Rubber Tired Loaders_2016_1000	0,505153	0,424	1,46404	6,72411	0,005	0,198	0,182	504,7801	0,152	0,068137931
Rubber Tired Loaders	2017	16	25	Rubber Tired Loaders_2017_25	2,32856	1,957	7,65953	5,95377	0,005	0,633	0,582	553,5831	0,17	0,076206897
Rubber Tired Loaders	2017	26	50	Rubber Tired Loaders_2017_50	2,32856	1,957	7,65953	5,95377	0,005	0,633	0,582	553,5831	0,17	0,076206897
Rubber Tired Loaders	2017	51	120	Rubber Tired Loaders_2017_120	0,900842	0,757	4,17083	6,23569	0,005	0,53	0,487	491,8531	0,151	0,067689655
Rubber Tired Loaders	2017	121	175	Rubber Tired Loaders_2017_175	0,620654	0,522	3,5175	5,19525	0,005	0,289	0,266	497,3533	0,152	0,068137931
Rubber Tired Loaders	2017	176	250	Rubber Tired Loaders_2017_250	0,443532	0,373	1,4172	4,75473	0,005	0,162	0,149	495,9499	0,152	0,068137931
Rubber Tired Loaders	2017	251	500	Rubber Tired Loaders_2017_500	0,439436	0,369	2,06046	4,25314	0,005	0,16	0,147	492,2764	0,151	0,067689655
Rubber Tired Loaders	2017	501	750	Rubber Tired Loaders_2017_750	0,436922	0,367	1,70044	4,05049	0,005	0,16	0,147	484,3661	0,148	0,066344828
Rubber Tired Loaders	2017	751	1000	Rubber Tired Loaders_2017_1000	0,493245	0,414	1,45641	6,55319	0,005	0,192	0,176	496,8966	0,152	0,068137931
Rubber Tired Loaders	2018	16	25	Rubber Tired Loaders_2018_25	2,100538	1,765	7,29915	5,67925	0,005	0,576	0,53	545,0529	0,17	0,076206897

Rubber Tired Loaders	2018	26	50	Rubber Tired Loaders_2018_50	2,100538	1,765	7,29915	5,67925	0,005	0,576	0,53	545,0529	0,17	0,076206897
Rubber Tired Loaders	2018	51	120	Rubber Tired Loaders_2018_120	0,779856	0,655	4,04742	5,47032	0,005	0,452	0,416	484,0931	0,151	0,067689655
Rubber Tired Loaders	2018	121	175	Rubber Tired Loaders_2018_175	0,533198	0,448	3,42332	4,36814	0,005	0,242	0,223	489,5114	0,152	0,068137931
Rubber Tired Loaders	2018	176	250	Rubber Tired Loaders_2018_250	0,396861	0,333	1,34644	4,13133	0,005	0,14	0,129	487,9023	0,152	0,068137931
Rubber Tired Loaders	2018	251	500	Rubber Tired Loaders_2018_500	0,397312	0,334	1,86807	3,72607	0,005	0,14	0,128	484,5709	0,151	0,067689655
Rubber Tired Loaders	2018	501	750	Rubber Tired Loaders_2018_750	0,393495	0,331	1,55549	3,5437	0,005	0,14	0,129	476,5663	0,148	0,066344828
Rubber Tired Loaders	2018	751	1000	Rubber Tired Loaders_2018_1000	0,399711	0,336	1,21289	5,67315	0,005	0,154	0,142	488,4037	0,152	0,068137931
Rubber Tired Loaders	2019	16	25	Rubber Tired Loaders_2019_25	1,906195	1,602	6,97769	5,43193	0,005	0,518	0,476	536,2254	0,17	0,076206897
Rubber Tired Loaders	2019	26	50	Rubber Tired Loaders_2019_50	1,906195	1,602	6,97769	5,43193	0,005	0,518	0,476	536,2254	0,17	0,076206897
Rubber Tired Loaders	2019	51	120	Rubber Tired Loaders_2019_120	0,707701	0,595	3,97887	5,00611	0,005	0,402	0,37	475,8636	0,151	0,067689655
Rubber Tired Loaders	2019	121	175	Rubber Tired Loaders_2019_175	0,482139	0,405	3,38084	3,85918	0,005	0,213	0,196	481,7364	0,152	0,068137931
Rubber Tired Loaders	2019	176	250	Rubber Tired Loaders_2019_250	0,368194	0,309	1,30248	3,74452	0,005	0,126	0,116	480,0997	0,152	0,068137931
Rubber Tired Loaders	2019	251	500	Rubber Tired Loaders_2019_500	0,363843	0,306	1,7248	3,28755	0,005	0,123	0,113	477,0415	0,151	0,067689655
Rubber Tired Loaders	2019	501	750	Rubber Tired Loaders_2019_750	0,348958	0,293	1,45157	3,01875	0,005	0,118	0,109	471,1874	0,149	0,066793103
Rubber Tired Loaders	2019	751	1000	Rubber Tired Loaders_2019_1000	0,384887	0,323	1,20834	5,45926	0,005	0,146	0,134	480,523	0,152	0,068137931
Rubber Tired Loaders	2020	16	25	Rubber Tired Loaders_2020_25	1,761913	1,48	6,76793	5,25369	0,005	0,474	0,436	524,6967	0,17	0,076206897
Rubber Tired Loaders	2020	26	50	Rubber Tired Loaders_2020_50	1,761913	1,48	6,76793	5,25369	0,005	0,474	0,436	524,6967	0,17	0,076206897
Rubber Tired Loaders	2020	51	120	Rubber Tired Loaders_2020_120	0,661113	0,556	3,94839	4,68644	0,005	0,367	0,338	465,6735	0,151	0,067689655
Rubber Tired Loaders	2020	121	175	Rubber Tired Loaders_2020_175	0,450696	0,379	3,36809	3,51735	0,005	0,194	0,178	471,2135	0,152	0,068137931
Rubber Tired Loaders	2020	176	250	Rubber Tired Loaders_2020_250	0,345399	0,29	1,26885	3,42116	0,005	0,114	0,104	469,5127	0,152	0,068137931
Rubber Tired Loaders	2020	251	500	Rubber Tired Loaders_2020_500	0,343959	0,289	1,6304	3,01666	0,005	0,112	0,103	466,7831	0,151	0,067689655
Rubber Tired Loaders	2020	501	750	Rubber Tired Loaders_2020_750	0,329462	0,277	1,39991	2,76722	0,005	0,107	0,099	462,193	0,149	0,066793103
Rubber Tired Loaders	2020	751	1000	Rubber Tired Loaders_2020_1000	0,370676	0,311	1,20366	5,25309	0,005	0,139	0,127	469,9352	0,152	0,068137931
Rubber Tired Loaders	2021	16	25	Rubber Tired Loaders_2021_25	1,577419	1,325	6,44855	4,97419	0,005	0,409	0,376	524,5505	0,17	0,076206897
Rubber Tired Loaders	2021	26	50	Rubber Tired Loaders_2021_50	1,577419	1,325	6,44855	4,97419	0,005	0,409	0,376	524,5505	0,17	0,076206897
Rubber Tired Loaders	2021	51	120	Rubber Tired Loaders_2021_120	0,592559	0,498	3,8917	4,21491	0,005	0,316	0,291	466,4213	0,151	0,067689655
Rubber Tired Loaders	2021	121	175	Rubber Tired Loaders_2021_175	0,411896	0,346	3,35381	3,11886	0,005	0,171	0,157	471,0804	0,152	0,068137931
Rubber Tired Loaders	2021	176	250	Rubber Tired Loaders_2021_250	0,316703	0,266	1,24034	2,9977	0,005	0,1	0,092	469,5642	0,152	0,068137931
Rubber Tired Loaders	2021	251	500	Rubber Tired Loaders_2021_500	0,314488	0,264	1,52922	2,61037	0,005	0,097	0,09	467,9277	0,151	0,067689655
Rubber Tired Loaders	2021	501	750	Rubber Tired Loaders_2021_750	0,322962	0,271	1,39703	2,64092	0,005	0,102	0,094	462,0548	0,149	0,066793103
Rubber Tired Loaders	2021	751	1000	Rubber Tired Loaders_2021_1000	0,350105	0,294	1,2055	4,97489	0,005	0,128	0,118	471,2577	0,152	0,068137931
Rubber Tired Loaders	2022	16	25	Rubber Tired Loaders_2022_25	1,402643	1,179	6,20445	4,74817	0,005	0,354	0,326	524,7914	0,17	0,076206897
Rubber Tired Loaders	2022	26	50	Rubber Tired Loaders_2022_50	1,402643	1,179	6,20445	4,74817	0,005	0,354	0,326	524,7914	0,17	0,076206897
Rubber Tired Loaders	2022	51	120	Rubber Tired Loaders_2022_120	0,523774	0,44	3,83931	3,7684	0,005	0,267	0,245	466,4936	0,151	0,067689655
Rubber Tired Loaders	2022	121	175	Rubber Tired Loaders_2022_175	0,350975	0,295	3,30208	2,5181	0,005	0,136	0,125	470,9274	0,152	0,068137931
Rubber Tired Loaders	2022	176	250	Rubber Tired Loaders_2022_250	0,269035	0,226	1,188	2,34693	0,005	0,079	0,072	469,9041	0,152	0,068137931
Rubber Tired Loaders	2022	251	500	Rubber Tired Loaders_2022_500	0,281674	0,237	1,441	2,17525	0,005	0,081	0,075	468,1288	0,151	0,067689655
Rubber Tired Loaders	2022	501	750	Rubber Tired Loaders_2022_750	0,27713	0,233	1,31524	2,0971	0,005	0,08	0,074	463,8194	0,15	0,067241379
Rubber Tired Loaders	2022	751	1000	Rubber Tired Loaders_2022_1000	0,229104	0,193	1,16216	3,61655	0,005	0,074	0,069	472,8577	0,153	0,068586207
Rubber Tired Loaders	2023	16	25	Rubber Tired Loaders_2023_25	1,248748	1,049	5,97233	4,52113	0,005	0,304	0,279	524,304	0,17	0,076206897
Rubber Tired Loaders	2023	26	50	Rubber Tired Loaders_2023_50	1,248748	1,049	5,97233	4,52113	0,005	0,304	0,279	524,304	0,17	0,076206897
Rubber Tired Loaders	2023	51	120	Rubber Tired Loaders_2023_120	0,490267	0,412	3,82678	3,51183	0,005	0,238	0,219	466,5584	0,151	0,067689655
Rubber Tired Loaders	2023	121	175	Rubber Tired Loaders_2023_175	0,320411	0,269	3,29198	2,19586	0,005	0,118	0,108	470,6601	0,152	0,068137931
Rubber Tired Loaders	2023	176	250	Rubber Tired Loaders_2023_250	0,249759	0,21	1,17136	2,05963	0,005	0,069	0,063	469,824	0,152	0,068137931
Rubber Tired Loaders	2023	251	500	Rubber Tired Loaders_2023_500	0,258421	0,217	1,38396	1,86629	0,005	0,069	0,064	468,466	0,152	0,068137931
Rubber Tired Loaders	2023	501	750	Rubber Tired Loaders_2023_750	0,269537	0,226	1,32307	1,92719	0,005	0,074	0,069	464,5553	0,15	0,067241379
Rubber Tired Loaders	2023	751	1000	Rubber Tired Loaders_2023_1000	0,229405	0,193	1,17379	3,52792	0,005	0,071	0,065	472,3032	0,153	0,068586207
Rubber Tired Loaders	2024	16	25	Rubber Tired Loaders_2024_25	1,200513	1,009	5,98698	4,46751	0,005	0,286	0,263	524,2299	0,17	0,076206897
Rubber Tired Loaders	2024	26	50	Rubber Tired Loaders_2024_50	1,200513	1,009	5,98698	4,46751	0,005	0,286	0,263	524,2299	0,17	0,076206897
Rubber Tired Loaders	2024	51	120	Rubber Tired Loaders_2024_120	0,472864	0,397	3,83209	3,33895	0,005	0,22	0,203	466,8084	0,151	0,067689655
Rubber Tired Loaders	2024	121	175	Rubber Tired Loaders_2024_175	0,292737	0,246	3,28823	1,88365	0,005	0,1	0,092	470,3567	0,152	0,068137931
Rubber Tired Loaders	2024	176	250	Rubber Tired Loaders_2024_250	0,234511	0,197	1,1607	1,80598	0,005	0,06	0,056	469,7875	0,152	0,068137931
Rubber Tired Loaders	2024	251	500	Rubber Tired Loaders_2024_500	0,249195	0,209	1,3518	1,70166	0,005	0,063	0,058	468,5133	0,152	0,068137931
Rubber Tired Loaders	2024	501	750	Rubber Tired Loaders_2024_750	0,268468	0,226	1,33327	1,88137	0,005	0,072	0,066	464,8656	0,15	0,067241379
Rubber Tired Loaders	2024	751	1000	Rubber Tired Loaders_2024_1000	0,238754	0,201	1,19144	3,54358	0,005	0,071	0,066	472,3454	0,153	0,068586207
Rubber Tired Loaders	2025	16	25	Rubber Tired Loaders_2025_25	1,142731	0,96	5,9413	4,34846	0,005	0,259	0,238	523,9076	0,169	0,075758621
Rubber Tired Loaders	2025	26	50	Rubber Tired Loaders_2025_50	1,142731	0,96	5,9413	4,34846	0,005	0,259	0,238	523,9076	0,169	0,075758621
Rubber Tired Loaders	2025	51	120	Rubber Tired Loaders_2025_120	0,418779	0,352	3,79086	2,97026	0,005	0,179	0,165	466,8982	0,151	0,067689655
Rubber Tired Loaders	2025	121	175	Rubber Tired Loaders_2025_175	0,266202	0,224	3,28059	1,59023	0,005	0,084	0,077	470,4594	0,152	0,068137931
Rubber Tired Loaders	2025	176	250	Rubber Tired Loaders_2025_250	0,211073	0,177	1,1417	1,44207	0,005	0,048	0,045	469,8711	0,152	0,068137931
Rubber Tired Loaders	2025	251	500	Rubber Tired Loaders_2025_500	0,22979	0,193	1,2763	1,43264	0,005	0,053	0,048	469,1434	0,152	0,068137931
Rubber Tired Loaders	2025	501	750	Rubber Tired Loaders_2025_750	0,252566	0,212	1,33262	1,65408	0,005	0,064	0,059	465,0523	0,15	0,067241379
Rubber Tired Loaders	2025	751	1000	Rubber Tired Loaders_2025_1000	0,196905	0,165	1,12172	3,08852	0,005	0,052	0,048	472,4559	0,153	0,068586207
Rubber Tired Loaders	2030	16	25	Rubber Tired Loaders_2030_25	1,834	0,685	2,339	4,332	0,007	0,161	0,161	568,299	0,061	0,027344828
Rubber Tired Loaders	2030	26	50	Rubber Tired Loaders_2030_50	3,121	0,634	5,181	3,5	0,007	0,062	0,062	568,3	0,057	0,025551724
Rubber Tired Loaders	2030	51	120	Rubber Tired Loaders_2030_120	2,953	0,317	3,759	1,875	0,006	0,056	0,056	568,299	0,028	0,012551724
Rubber Tired Loaders	2030	121	175	Rubber Tired Loaders_2030_175	3,898	0,232	3,312	0,787	0,006	0,036	0,036	568,299	0,02	0,008965517
Rubber Tired Loaders	2030	176	250	Rubber Tired Loaders_2030_250	4,951	0,21	1,138	0,655	0,006	0,022	0,022	568,299	0,018	0,008068966
Rubber Tired Loaders	2030	251	500	Rubber Tired Loaders_2030_500	7,812	0,208	1,085	0,619	0,005	0,021	0,021	568,299	0,018	0,008068966
Rubber Tired Loaders	2030	501	750	Rubber Tired Loaders_2030_750	16,018	0,208	1,085	0,627	0,005	0,022	0,022	568,299	0,018	0,008068966
Rubber Tired Loaders	2030	751	1000	Rubber Tired Loaders_2030_1000	20,168	0,214	1,099	2,722	0,005	0,039	0,039	568,299	0,019	0,008517241
Rubber Tired Loaders	2035	16	25	Rubber Tired Loaders_2035_25	1,834	0,685	2,339	4,332	0,007	0,161	0,161	568,299	0,061	0,027344828
Rubber Tired Loaders	2035	26	50	Rubber Tired Loaders_2035_50	2,833	0,575	5,126	3,337	0,007	0,035	0,035	568,299	0,051	0,022862069

Rubber Tired Loaders	2035	51	120	Rubber Tired Loaders_2035_120	2,663	0,286	3,751	1,639	0,006	0,033	0,033	568,299	0,025	0,011206897
Rubber Tired Loaders	2035	121	175	Rubber Tired Loaders_2035_175	3,376	0,2	3,312	0,481	0,006	0,022	0,022	568,299	0,018	0,008068966
Rubber Tired Loaders	2035	176	250	Rubber Tired Loaders_2035_250	4,514	0,191	1,129	0,434	0,006	0,015	0,015	568,299	0,017	0,00762069
Rubber Tired Loaders	2035	251	500	Rubber Tired Loaders_2035_500	7,156	0,191	1,076	0,416	0,005	0,015	0,015	568,299	0,017	0,00762069
Rubber Tired Loaders	2035	501	750	Rubber Tired Loaders_2035_750	14,669	0,191	1,076	0,421	0,005	0,015	0,015	568,299	0,017	0,00762069
Rubber Tired Loaders	2035	751	1000	Rubber Tired Loaders_2035_1000	18,204	0,193	1,082	2,584	0,005	0,03	0,03	568,299	0,017	0,00762069
Rubber Tired Loaders	2040	16	25	Rubber Tired Loaders_2040_25	1,834	0,685	2,339	4,332	0,007	0,161	0,161	568,299	0,061	0,027344828
Rubber Tired Loaders	2040	26	50	Rubber Tired Loaders_2040_50	2,684	0,545	5,102	3,283	0,007	0,024	0,024	568,3	0,049	0,021965517
Rubber Tired Loaders	2040	51	120	Rubber Tired Loaders_2040_120	2,53	0,271	3,748	1,543	0,006	0,022	0,022	568,3	0,024	0,010758621
Rubber Tired Loaders	2040	121	175	Rubber Tired Loaders_2040_175	3,172	0,188	3,314	0,365	0,006	0,016	0,016	568,299	0,017	0,00762069
Rubber Tired Loaders	2040	176	250	Rubber Tired Loaders_2040_250	4,375	0,185	1,128	0,346	0,006	0,013	0,013	568,299	0,016	0,007172414
Rubber Tired Loaders	2040	251	500	Rubber Tired Loaders_2040_500	6,953	0,185	1,076	0,338	0,005	0,013	0,013	568,3	0,016	0,007172414
Rubber Tired Loaders	2040	501	750	Rubber Tired Loaders_2040_750	14,247	0,185	1,076	0,34	0,005	0,013	0,013	568,299	0,016	0,007172414
Rubber Tired Loaders	2040	751	1000	Rubber Tired Loaders_2040_1000	17,496	0,186	1,076	2,522	0,005	0,026	0,026	568,299	0,016	0,007172414
Scrapers	1990	51	120	Scrapers_1990_120	7,335	2,413	5,806	15,182	0,791	1,373	1,373	568,299	0,217	0,097275862
Scrapers	1990	121	175	Scrapers_1990_175	8,743	1,823	5,174	14,491	0,758	1,017	1,017	568,299	0,164	0,073517241
Scrapers	1990	176	250	Scrapers_1990_250	12,369	1,823	5,174	14,491	0,758	1,017	1,017	568,299	0,164	0,073517241
Scrapers	1990	251	500	Scrapers_1990_500	16,73	1,607	11,673	13,709	0,662	0,867	0,867	568,299	0,145	0,065
Scrapers	1990	501	750	Scrapers_1990_750	28,902	1,607	11,673	13,709	1,018	0,883	0,883	568,299	0,145	0,065
Scrapers	2000	51	120	Scrapers_2000_120	6,006	1,975	4,906	11,177	0,06	0,949	0,949	568,299	0,178	0,079793103
Scrapers	2000	121	175	Scrapers_2000_175	6,456	1,346	4,046	10,226	0,057	0,572	0,572	568,299	0,121	0,054241379
Scrapers	2000	176	250	Scrapers_2000_250	8,023	1,183	3,423	9,944	0,057	0,493	0,493	568,299	0,106	0,047517241
Scrapers	2000	251	500	Scrapers_2000_500	11,061	1,062	6,04	9,42	0,05	0,43	0,43	568,299	0,095	0,042586207
Scrapers	2000	501	750	Scrapers_2000_750	19,108	1,062	6,04	9,42	0,052	0,43	0,43	568,299	0,095	0,042586207
Scrapers	2005	51	120	Scrapers_2005_120	5,36	1,763	4,636	9,807	0,06	0,901	0,901	568,299	0,159	0,071275862
Scrapers	2005	121	175	Scrapers_2005_175	5,592	1,166	3,76	8,934	0,057	0,514	0,514	568,299	0,105	0,047068966
Scrapers	2005	176	250	Scrapers_2005_250	6,251	0,921	2,602	8,58	0,057	0,377	0,377	568,299	0,083	0,037206897
Scrapers	2005	251	500	Scrapers_2005_500	8,477	0,814	4,07	7,854	0,05	0,331	0,331	568,3	0,073	0,032724138
Scrapers	2005	501	750	Scrapers_2005_750	14,794	0,822	4,063	7,99	0,052	0,333	0,333	568,299	0,074	0,033172414
Scrapers	2010	51	120	Scrapers_2010_120	0,828186	0,696	3,97834	7,09453	0,005	0,507	0,466	537,9051	0,157	0,07037931
Scrapers	2010	121	175	Scrapers_2010_175	0,907518	0,763	3,83189	8,55764	0,005	0,444	0,408	532,551	0,155	0,069482759
Scrapers	2010	176	250	Scrapers_2010_250	0,939807	0,79	3,25278	9,42837	0,005	0,434	0,399	520,9381	0,152	0,068137931
Scrapers	2010	251	500	Scrapers_2010_500	0,595043	0,5	4,1939	6,75544	0,005	0,272	0,25	525,1553	0,153	0,068586207
Scrapers	2010	501	750	Scrapers_2010_750	0,454495	0,382	3,13671	5,53444	0,005	0,209	0,192	525,522	0,153	0,068586207
Scrapers	2011	51	120	Scrapers_2011_120	0,831534	0,699	4,00655	7,06921	0,005	0,509	0,469	536,4691	0,157	0,07037931
Scrapers	2011	121	175	Scrapers_2011_175	0,907072	0,762	3,84357	8,51777	0,005	0,444	0,409	531,1835	0,155	0,069482759
Scrapers	2011	176	250	Scrapers_2011_250	0,933155	0,784	3,22574	9,34756	0,005	0,43	0,396	519,6705	0,152	0,068137931
Scrapers	2011	251	500	Scrapers_2011_500	0,590447	0,496	4,14563	6,64672	0,005	0,268	0,246	523,9083	0,153	0,068586207
Scrapers	2011	501	750	Scrapers_2011_750	0,45862	0,385	3,14165	5,48614	0,005	0,208	0,191	524,1241	0,153	0,068586207
Scrapers	2012	51	120	Scrapers_2012_120	0,847004	0,712	4,04661	7,11199	0,005	0,519	0,477	535,1238	0,157	0,07037931
Scrapers	2012	121	175	Scrapers_2012_175	0,915185	0,769	3,8659	8,53485	0,005	0,448	0,412	529,8158	0,155	0,069482759
Scrapers	2012	176	250	Scrapers_2012_250	0,935111	0,786	3,22909	9,33173	0,005	0,43	0,396	518,3695	0,152	0,068137931
Scrapers	2012	251	500	Scrapers_2012_500	0,596548	0,501	4,16192	6,64299	0,005	0,269	0,247	522,6784	0,153	0,068586207
Scrapers	2012	501	750	Scrapers_2012_750	0,468161	0,393	3,16628	5,49999	0,005	0,209	0,193	522,7621	0,153	0,068586207
Scrapers	2013	51	120	Scrapers_2013_120	0,850862	0,715	4,06971	7,08801	0,005	0,523	0,482	532,4144	0,157	0,07037931
Scrapers	2013	121	175	Scrapers_2013_175	0,895558	0,753	3,85136	8,33026	0,005	0,438	0,403	527,0754	0,155	0,069482759
Scrapers	2013	176	250	Scrapers_2013_250	0,923168	0,776	3,18463	9,20338	0,005	0,423	0,389	515,7585	0,152	0,068137931
Scrapers	2013	251	500	Scrapers_2013_500	0,590637	0,496	4,08663	6,51716	0,005	0,264	0,242	520,0884	0,153	0,068586207
Scrapers	2013	501	750	Scrapers_2013_750	0,462466	0,389	3,09865	5,3398	0,005	0,204	0,187	520,1031	0,153	0,068586207
Scrapers	2014	51	120	Scrapers_2014_120	0,855598	0,719	4,09983	7,0654	0,005	0,526	0,484	529,9445	0,157	0,07037931
Scrapers	2014	121	175	Scrapers_2014_175	0,85473	0,718	3,80661	7,90715	0,005	0,419	0,385	524,1709	0,155	0,069482759
Scrapers	2014	176	250	Scrapers_2014_250	0,882887	0,742	3,06131	8,81494	0,005	0,403	0,371	512,8529	0,152	0,068137931
Scrapers	2014	251	500	Scrapers_2014_500	0,569739	0,479	3,89824	6,23299	0,005	0,251	0,231	517,3608	0,153	0,068586207
Scrapers	2014	501	750	Scrapers_2014_750	0,438954	0,369	2,84564	5,01248	0,005	0,19	0,174	517,3937	0,153	0,068586207
Scrapers	2015	51	120	Scrapers_2015_120	0,869823	0,731	4,13678	7,10509	0,005	0,535	0,492	524,5601	0,157	0,07037931
Scrapers	2015	121	175	Scrapers_2015_175	0,849601	0,714	3,80865	7,76471	0,005	0,415	0,382	518,8294	0,155	0,069482759
Scrapers	2015	176	250	Scrapers_2015_250	0,868271	0,73	3,00753	8,66317	0,005	0,395	0,364	507,5699	0,152	0,068137931
Scrapers	2015	251	500	Scrapers_2015_500	0,561967	0,472	3,788	6,08577	0,005	0,246	0,226	511,9471	0,153	0,068586207
Scrapers	2015	501	750	Scrapers_2015_750	0,427981	0,36	2,68469	4,83862	0,005	0,182	0,167	512,0837	0,153	0,068586207
Scrapers	2016	51	120	Scrapers_2016_120	0,883537	0,742	4,17273	7,14312	0,005	0,543	0,5	519,1668	0,157	0,07037931
Scrapers	2016	121	175	Scrapers_2016_175	0,818244	0,688	3,78062	7,3844	0,005	0,397	0,365	513,4363	0,155	0,069482759
Scrapers	2016	176	250	Scrapers_2016_250	0,814194	0,684	2,8398	8,10864	0,005	0,367	0,338	502,255	0,151	0,067689655
Scrapers	2016	251	500	Scrapers_2016_500	0,538344	0,452	3,60633	5,75749	0,005	0,232	0,213	506,3503	0,153	0,068586207
Scrapers	2016	501	750	Scrapers_2016_750	0,404454	0,34	2,48181	4,48425	0,005	0,167	0,154	506,6381	0,153	0,068586207
Scrapers	2017	51	120	Scrapers_2017_120	0,896722	0,753	4,20744	7,17946	0,005	0,551	0,507	511,1123	0,157	0,07037931
Scrapers	2017	121	175	Scrapers_2017_175	0,748819	0,629	3,70478	6,67066	0,005	0,359	0,331	505,3309	0,155	0,069482759
Scrapers	2017	176	250	Scrapers_2017_250	0,74607	0,627	2,64676	7,39867	0,005	0,333	0,306	494,5231	0,152	0,068137931
Scrapers	2017	251	500	Scrapers_2017_500	0,505877	0,425	3,33699	5,33951	0,005	0,214	0,197	498,4571	0,153	0,068586207
Scrapers	2017	501	750	Scrapers_2017_750	0,386598	0,325	2,29479	4,21648	0,005	0,156	0,143	498,6929	0,153	0,068586207
Scrapers	2018	51	120	Scrapers_2018_120	0,881019	0,74	4,20429	7,03577	0,005	0,543	0,499	502,8288	0,157	0,07037931
Scrapers	2018	121	175	Scrapers_2018_175	0,640866	0,539	3,56847	5,64105	0,005	0,303	0,279	497,3396	0,155	0,069482759
Scrapers	2018	176	250	Scrapers_2018_250	0,662403	0,557	2,40704	6,56304	0,005	0,29	0,267	486,9908	0,152	0,068137931
Scrapers	2018	251	500	Scrapers_2018_500	0,439318	0,369	2,82811	4,56771	0,005	0,18	0,166	490,7734	0,153	0,068586207

Scrapers	2018	501	750	Scrapers_2018_750	0,349618	0,294	1,96493	3,74582	0,005	0,135	0,124	490,5775	0,153	0,068586207
Scrapers	2019	51	120	Scrapers_2019_120	0,854498	0,718	4,19661	6,84136	0,005	0,525	0,483	494,1	0,156	0,069931034
Scrapers	2019	121	175	Scrapers_2019_175	0,606989	0,51	3,53297	5,26356	0,005	0,283	0,261	489,2546	0,155	0,069482759
Scrapers	2019	176	250	Scrapers_2019_250	0,596624	0,501	2,23321	5,83102	0,005	0,257	0,236	479,0317	0,152	0,068137931
Scrapers	2019	251	500	Scrapers_2019_500	0,40804	0,343	2,59466	4,15646	0,005	0,163	0,15	482,7319	0,153	0,068586207
Scrapers	2019	501	750	Scrapers_2019_750	0,329384	0,277	1,82903	3,43103	0,005	0,123	0,113	482,5963	0,153	0,068586207
Scrapers	2020	51	120	Scrapers_2020_120	0,834143	0,701	4,19756	6,6767	0,005	0,51	0,469	483,745	0,156	0,069931034
Scrapers	2020	121	175	Scrapers_2020_175	0,568453	0,478	3,50114	4,86851	0,005	0,262	0,241	478,6077	0,155	0,069482759
Scrapers	2020	176	250	Scrapers_2020_250	0,531032	0,446	2,06469	5,089	0,005	0,223	0,205	468,9883	0,152	0,068137931
Scrapers	2020	251	500	Scrapers_2020_500	0,380326	0,32	2,40063	3,78254	0,005	0,148	0,136	472,1751	0,153	0,068586207
Scrapers	2020	501	750	Scrapers_2020_750	0,311991	0,262	1,72502	3,12592	0,005	0,113	0,104	471,7776	0,153	0,068586207
Scrapers	2021	51	120	Scrapers_2021_120	0,837922	0,704	4,21819	6,65882	0,005	0,512	0,471	483,7128	0,156	0,069931034
Scrapers	2021	121	175	Scrapers_2021_175	0,514014	0,432	3,45599	4,34133	0,005	0,232	0,213	478,654	0,155	0,069482759
Scrapers	2021	176	250	Scrapers_2021_250	0,464853	0,391	1,88374	4,36706	0,005	0,189	0,174	469,1258	0,152	0,068137931
Scrapers	2021	251	500	Scrapers_2021_500	0,356021	0,299	2,25454	3,44481	0,005	0,134	0,123	472,4636	0,153	0,068586207
Scrapers	2021	501	750	Scrapers_2021_750	0,298025	0,25	1,65772	2,88702	0,005	0,105	0,097	471,7859	0,153	0,068586207
Scrapers	2022	51	120	Scrapers_2022_120	0,809995	0,681	4,20484	6,45548	0,005	0,494	0,454	483,4481	0,156	0,069931034
Scrapers	2022	121	175	Scrapers_2022_175	0,463814	0,39	3,41662	3,83296	0,005	0,204	0,187	478,7411	0,155	0,069482759
Scrapers	2022	176	250	Scrapers_2022_250	0,406319	0,341	1,74265	3,66905	0,005	0,16	0,147	469,2686	0,152	0,068137931
Scrapers	2022	251	500	Scrapers_2022_500	0,313802	0,264	2,05212	2,87856	0,005	0,112	0,103	473,2304	0,153	0,068586207
Scrapers	2022	501	750	Scrapers_2022_750	0,266627	0,224	1,50816	2,47537	0,005	0,09	0,083	471,2788	0,152	0,068137931
Scrapers	2023	51	120	Scrapers_2023_120	0,7496	0,63	4,14443	6,02603	0,005	0,458	0,421	483,0296	0,156	0,069931034
Scrapers	2023	121	175	Scrapers_2023_175	0,430003	0,361	3,39533	3,47913	0,005	0,184	0,169	478,6814	0,155	0,069482759
Scrapers	2023	176	250	Scrapers_2023_250	0,37772	0,317	1,67839	3,2838	0,005	0,144	0,133	469,5597	0,152	0,068137931
Scrapers	2023	251	500	Scrapers_2023_500	0,301363	0,253	1,97527	2,66611	0,005	0,105	0,096	473,1772	0,153	0,068586207
Scrapers	2023	501	750	Scrapers_2023_750	0,26361	0,222	1,51295	2,38587	0,005	0,087	0,08	471,2953	0,152	0,068137931
Scrapers	2024	51	120	Scrapers_2024_120	0,683919	0,575	4,09486	5,63222	0,005	0,414	0,381	482,7009	0,156	0,069931034
Scrapers	2024	121	175	Scrapers_2024_175	0,399992	0,336	3,37249	3,15631	0,005	0,166	0,153	478,8089	0,155	0,069482759
Scrapers	2024	176	250	Scrapers_2024_250	0,358714	0,301	1,62739	3,01379	0,005	0,133	0,122	469,3521	0,152	0,068137931
Scrapers	2024	251	500	Scrapers_2024_500	0,291137	0,245	1,92055	2,47694	0,005	0,098	0,09	472,8455	0,153	0,068586207
Scrapers	2024	501	750	Scrapers_2024_750	0,253257	0,213	1,46065	2,18653	0,005	0,081	0,074	471,4291	0,152	0,068137931
Scrapers	2025	51	120	Scrapers_2025_120	0,673967	0,566	4,09423	5,50259	0,005	0,405	0,372	482,3629	0,156	0,069931034
Scrapers	2025	121	175	Scrapers_2025_175	0,34526	0,29	3,3209	2,63098	0,005	0,137	0,126	478,9476	0,155	0,069482759
Scrapers	2025	176	250	Scrapers_2025_250	0,346529	0,291	1,60249	2,80326	0,005	0,125	0,115	469,4459	0,152	0,068137931
Scrapers	2025	251	500	Scrapers_2025_500	0,257328	0,216	1,7318	2,05051	0,005	0,081	0,074	472,5394	0,153	0,068586207
Scrapers	2025	501	750	Scrapers_2025_750	0,218534	0,184	1,33825	1,71287	0,005	0,064	0,059	472,115	0,153	0,068586207
Scrapers	2030	51	120	Scrapers_2030_120	1,248	0,41	3,866	2,384	0,006	0,111	0,111	568,299	0,037	0,016586207
Scrapers	2030	121	175	Scrapers_2030_175	1,445	0,301	3,389	1,32	0,006	0,068	0,068	568,299	0,027	0,012103448
Scrapers	2030	176	250	Scrapers_2030_250	1,794	0,264	1,206	1,149	0,006	0,042	0,042	568,299	0,023	0,010310345
Scrapers	2030	251	500	Scrapers_2030_500	2,697	0,259	1,184	1,057	0,005	0,04	0,04	568,299	0,023	0,010310345
Scrapers	2030	501	750	Scrapers_2030_750	4,666	0,259	1,184	1,075	0,005	0,04	0,04	568,299	0,023	0,010310345
Scrapers	2035	51	120	Scrapers_2035_120	1,058	0,348	3,842	1,943	0,006	0,064	0,064	568,299	0,031	0,013896552
Scrapers	2035	121	175	Scrapers_2035_175	1,199	0,25	3,382	0,824	0,006	0,04	0,04	568,299	0,022	0,009862069
Scrapers	2035	176	250	Scrapers_2035_250	1,553	0,229	1,175	0,717	0,006	0,026	0,026	568,299	0,02	0,008965517
Scrapers	2035	251	500	Scrapers_2035_500	2,356	0,226	1,123	0,674	0,005	0,025	0,025	568,3	0,02	0,008965517
Scrapers	2035	501	750	Scrapers_2035_750	4,075	0,226	1,123	0,682	0,005	0,025	0,025	568,299	0,02	0,008965517
Scrapers	2040	51	120	Scrapers_2040_120	0,962	0,316	3,833	1,715	0,006	0,04	0,04	568,299	0,028	0,012551724
Scrapers	2040	121	175	Scrapers_2040_175	1,063	0,221	3,381	0,549	0,006	0,026	0,026	568,299	0,02	0,008965517
Scrapers	2040	176	250	Scrapers_2040_250	1,425	0,21	1,159	0,498	0,006	0,018	0,018	568,3	0,018	0,008068966
Scrapers	2040	251	500	Scrapers_2040_500	2,175	0,209	1,1	0,475	0,005	0,017	0,017	568,299	0,018	0,008068966
Scrapers	2040	501	750	Scrapers_2040_750	3,76	0,209	1,1	0,48	0,005	0,017	0,017	568,299	0,018	0,008068966
Signal Boards	1990	6	15	Signal Boards_1990_15	2,838	1,804	4,999	9,999	1,049	0,975	0,975	568,299	0,162	0,07262069
Signal Boards	1990	26	50	Signal Boards_1990_50	33,688	3,65	7,626	7,518	0,871	1,035	1,035	568,299	0,329	0,147482759
Signal Boards	1990	51	120	Signal Boards_1990_120	41,675	2,037	5,201	13,738	0,791	1,095	1,095	568,3	0,183	0,082034483
Signal Boards	1990	121	175	Signal Boards_1990_175	54,982	1,395	4,603	12,364	0,758	0,728	0,728	568,3	0,125	0,056034483
Signal Boards	1990	176	250	Signal Boards_1990_250	90,827	1,685	5,563	14,94	0,917	0,88	0,88	686,695	0,152	0,068137931
Signal Boards	2000	6	15	Signal Boards_2000_15	2,085	1,325	4,257	7,675	0,079	0,61	0,61	568,299	0,119	0,053344828
Signal Boards	2000	26	50	Signal Boards_2000_50	31,608	3,424	7,268	6,709	0,066	0,765	0,765	568,299	0,309	0,138517241
Signal Boards	2000	51	120	Signal Boards_2000_120	33,68	1,646	4,338	9,835	0,06	0,756	0,756	568,299	0,148	0,066344828
Signal Boards	2000	121	175	Signal Boards_2000_175	43,484	1,103	3,53	8,941	0,057	0,447	0,447	568,299	0,099	0,04437931
Signal Boards	2000	176	250	Signal Boards_2000_250	59,587	1,105	3,359	10,385	0,069	0,438	0,438	686,695	0,099	0,04437931
Signal Boards	2005	6	15	Signal Boards_2005_15	1,168	0,742	3,469	4,981	0,079	0,35	0,35	568,299	0,066	0,029586207
Signal Boards	2005	26	50	Signal Boards_2005_50	27,711	3,002	6,663	6,227	0,066	0,704	0,704	568,299	0,27	0,121034483
Signal Boards	2005	51	120	Signal Boards_2005_120	28,596	1,398	4	8,234	0,06	0,695	0,695	568,299	0,126	0,056482759
Signal Boards	2005	121	175	Signal Boards_2005_175	35,881	0,91	3,185	7,528	0,057	0,383	0,383	568,3	0,082	0,036758621
Signal Boards	2005	176	250	Signal Boards_2005_250	41,93	0,778	2,245	8,577	0,069	0,303	0,303	686,695	0,07	0,03137931
Signal Boards	2010	6	15	Signal Boards_2010_15	1,04	0,661	3,469	4,142	0,008	0,155	0,155	568,299	0,059	0,026448276
Signal Boards	2010	26	50	Signal Boards_2010_50	21,63	2,343	6,009	5,792	0,007	0,571	0,571	568,299	0,211	0,094586207
Signal Boards	2010	51	120	Signal Boards_2010_120	21,667	1,059	3,811	6,693	0,006	0,56	0,56	568,299	0,095	0,042586207
Signal Boards	2010	121	175	Signal Boards_2010_175	27,641	0,701	3,102	5,958	0,006	0,311	0,311	568,299	0,063	0,028241379
Signal Boards	2010	176	250	Signal Boards_2010_250	29,698	0,551	1,651	6,749	0,007	0,212	0,212	686,695	0,049	0,021965517
Signal Boards	2011	6	15	Signal Boards_2011_15	1,04	0,661	3,469	4,142	0,008	0,156	0,156	568,299	0,059	0,026448276
Signal Boards	2011	26	50	Signal Boards_2011_50	20,109	2,178	5,834	5,698	0,007	0,541	0,541	568,299	0,196	0,087862069

Signal Boards	2011	51	120	Signal Boards_2011_120	20,187	0,986	3,774	6,327	0,006	0,535	0,535	568,299	0,089	0,039896552
Signal Boards	2011	121	175	Signal Boards_2011_175	25,933	0,658	3,09	5,615	0,006	0,298	0,298	568,299	0,059	0,026448276
Signal Boards	2011	176	250	Signal Boards_2011_250	27,264	0,506	1,548	6,272	0,007	0,19	0,19	686,695	0,045	0,020172414
Signal Boards	2012	6	15	Signal Boards_2012_15	1,04	0,661	3,469	4,142	0,008	0,16	0,16	568,299	0,059	0,026448276
Signal Boards	2012	26	50	Signal Boards_2012_50	18,413	1,995	5,632	5,596	0,007	0,508	0,508	568,299	0,18	0,080689655
Signal Boards	2012	51	120	Signal Boards_2012_120	18,605	0,909	3,733	5,923	0,006	0,498	0,498	568,299	0,082	0,036758621
Signal Boards	2012	121	175	Signal Boards_2012_175	24,082	0,611	3,077	5,246	0,006	0,275	0,275	568,3	0,055	0,024655172
Signal Boards	2012	176	250	Signal Boards_2012_250	25,308	0,469	1,483	5,81	0,007	0,171	0,171	686,695	0,042	0,018827586
Signal Boards	2013	6	15	Signal Boards_2013_15	1,04	0,661	3,469	4,142	0,008	0,161	0,161	568,299	0,059	0,026448276
Signal Boards	2013	26	50	Signal Boards_2013_50	16,687	1,808	5,427	5,362	0,007	0,465	0,465	568,299	0,163	0,073068966
Signal Boards	2013	51	120	Signal Boards_2013_120	17,043	0,833	3,694	5,532	0,006	0,456	0,456	568,299	0,075	0,03362069
Signal Boards	2013	121	175	Signal Boards_2013_175	22,253	0,564	3,067	4,903	0,006	0,252	0,252	568,3	0,05	0,022413793
Signal Boards	2013	176	250	Signal Boards_2013_250	23,66	0,439	1,439	5,369	0,007	0,156	0,156	686,695	0,039	0,017482759
Signal Boards	2014	6	15	Signal Boards_2014_15	1,04	0,661	3,469	4,142	0,008	0,161	0,161	568,299	0,059	0,026448276
Signal Boards	2014	26	50	Signal Boards_2014_50	15,005	1,625	5,231	5,139	0,007	0,422	0,422	568,299	0,146	0,065448276
Signal Boards	2014	51	120	Signal Boards_2014_120	15,539	0,759	3,658	5,186	0,006	0,414	0,414	568,299	0,068	0,030482759
Signal Boards	2014	121	175	Signal Boards_2014_175	20,512	0,52	3,058	4,582	0,006	0,228	0,228	568,299	0,046	0,02062069
Signal Boards	2014	176	250	Signal Boards_2014_250	22,034	0,408	1,402	4,857	0,007	0,141	0,141	686,695	0,036	0,016137931
Signal Boards	2015	6	15	Signal Boards_2015_15	1,04	0,661	3,469	4,142	0,008	0,161	0,161	568,299	0,059	0,026448276
Signal Boards	2015	26	50	Signal Boards_2015_50	13,489	1,461	5,068	4,943	0,007	0,382	0,382	568,299	0,131	0,058724138
Signal Boards	2015	51	120	Signal Boards_2015_120	14,067	0,687	3,624	4,791	0,006	0,371	0,371	568,299	0,062	0,027793103
Signal Boards	2015	121	175	Signal Boards_2015_175	18,694	0,474	3,052	4,136	0,006	0,205	0,205	568,299	0,042	0,018827586
Signal Boards	2015	176	250	Signal Boards_2015_250	20,523	0,38	1,371	4,365	0,007	0,127	0,127	686,695	0,034	0,015241379
Signal Boards	2016	6	15	Signal Boards_2016_15	1,04	0,661	3,469	4,142	0,008	0,161	0,161	568,299	0,059	0,026448276
Signal Boards	2016	26	50	Signal Boards_2016_50	12,061	1,306	4,921	4,761	0,007	0,343	0,343	568,299	0,117	0,052448276
Signal Boards	2016	51	120	Signal Boards_2016_120	12,653	0,618	3,594	4,414	0,006	0,33	0,33	568,299	0,055	0,024655172
Signal Boards	2016	121	175	Signal Boards_2016_175	16,949	0,43	3,047	3,708	0,006	0,183	0,183	568,299	0,038	0,017034483
Signal Boards	2016	176	250	Signal Boards_2016_250	19,106	0,354	1,344	3,894	0,007	0,114	0,114	686,695	0,031	0,013896552
Signal Boards	2017	6	15	Signal Boards_2017_15	1,04	0,661	3,469	4,142	0,008	0,161	0,161	568,299	0,059	0,026448276
Signal Boards	2017	26	50	Signal Boards_2017_50	10,695	1,158	4,785	4,59	0,007	0,306	0,306	568,299	0,104	0,04662069
Signal Boards	2017	51	120	Signal Boards_2017_120	11,32	0,553	3,566	4,059	0,006	0,29	0,29	568,299	0,049	0,021965517
Signal Boards	2017	121	175	Signal Boards_2017_175	15,322	0,388	3,044	3,305	0,006	0,161	0,161	568,299	0,035	0,015689655
Signal Boards	2017	176	250	Signal Boards_2017_250	17,83	0,33	1,323	3,452	0,007	0,101	0,101	686,695	0,029	0,013
Signal Boards	2018	6	15	Signal Boards_2018_15	1,04	0,661	3,469	4,142	0,008	0,161	0,161	568,299	0,059	0,026448276
Signal Boards	2018	26	50	Signal Boards_2018_50	9,4	1,018	4,657	4,427	0,007	0,27	0,27	568,299	0,091	0,040793103
Signal Boards	2018	51	120	Signal Boards_2018_120	10,078	0,492	3,541	3,723	0,006	0,252	0,252	568,299	0,044	0,019724138
Signal Boards	2018	121	175	Signal Boards_2018_175	13,836	0,351	3,043	2,93	0,006	0,141	0,141	568,299	0,031	0,013896552
Signal Boards	2018	176	250	Signal Boards_2018_250	16,678	0,309	1,306	3,04	0,007	0,09	0,09	686,695	0,027	0,012103448
Signal Boards	2019	6	15	Signal Boards_2019_15	1,04	0,661	3,47	4,142	0,008	0,161	0,161	568,299	0,059	0,026448276
Signal Boards	2019	26	50	Signal Boards_2019_50	8,189	0,887	4,538	4,272	0,007	0,236	0,236	568,3	0,08	0,035862069
Signal Boards	2019	51	120	Signal Boards_2019_120	8,938	0,437	3,519	3,41	0,006	0,216	0,216	568,299	0,039	0,017482759
Signal Boards	2019	121	175	Signal Boards_2019_175	12,677	0,321	3,043	2,601	0,006	0,125	0,125	568,299	0,029	0,013
Signal Boards	2019	176	250	Signal Boards_2019_250	15,682	0,291	1,292	2,676	0,007	0,08	0,08	686,695	0,026	0,011655172
Signal Boards	2020	6	15	Signal Boards_2020_15	1,04	0,661	3,469	4,142	0,008	0,161	0,161	568,299	0,059	0,026448276
Signal Boards	2020	26	50	Signal Boards_2020_50	7,28	0,788	4,448	4,132	0,007	0,206	0,206	568,299	0,071	0,031827586
Signal Boards	2020	51	120	Signal Boards_2020_120	8,081	0,395	3,504	3,134	0,006	0,187	0,187	568,299	0,035	0,015689655
Signal Boards	2020	121	175	Signal Boards_2020_175	11,756	0,298	3,043	2,309	0,006	0,11	0,11	568,299	0,026	0,011655172
Signal Boards	2020	176	250	Signal Boards_2020_250	14,813	0,274	1,281	2,35	0,007	0,071	0,071	686,695	0,024	0,010758621
Signal Boards	2021	6	15	Signal Boards_2021_15	1,04	0,661	3,469	4,142	0,008	0,161	0,161	568,299	0,059	0,026448276
Signal Boards	2021	26	50	Signal Boards_2021_50	6,598	0,714	4,38	4,002	0,007	0,179	0,179	568,299	0,064	0,028689655
Signal Boards	2021	51	120	Signal Boards_2021_120	7,434	0,363	3,493	2,889	0,006	0,162	0,162	568,299	0,032	0,014344828
Signal Boards	2021	121	175	Signal Boards_2021_175	10,965	0,278	3,043	2,043	0,006	0,098	0,098	568,299	0,025	0,011206897
Signal Boards	2021	176	250	Signal Boards_2021_250	14,033	0,26	1,273	2,053	0,007	0,063	0,063	686,695	0,023	0,010310345
Signal Boards	2022	6	15	Signal Boards_2022_15	1,04	0,661	3,469	4,142	0,008	0,161	0,161	568,3	0,059	0,026448276
Signal Boards	2022	26	50	Signal Boards_2022_50	6,047	0,655	4,325	3,88	0,007	0,154	0,154	568,299	0,059	0,026448276
Signal Boards	2022	51	120	Signal Boards_2022_120	6,908	0,337	3,484	2,668	0,006	0,141	0,141	568,299	0,03	0,013448276
Signal Boards	2022	121	175	Signal Boards_2022_175	10,249	0,26	3,044	1,801	0,006	0,086	0,086	568,299	0,023	0,010310345
Signal Boards	2022	176	250	Signal Boards_2022_250	13,317	0,247	1,266	1,782	0,007	0,055	0,055	686,695	0,022	0,009862069
Signal Boards	2023	6	15	Signal Boards_2023_15	1,04	0,661	3,469	4,142	0,008	0,161	0,161	568,299	0,059	0,026448276
Signal Boards	2023	26	50	Signal Boards_2023_50	5,57	0,603	4,282	3,767	0,007	0,132	0,132	568,299	0,054	0,024206897
Signal Boards	2023	51	120	Signal Boards_2023_120	6,449	0,315	3,478	2,472	0,006	0,122	0,122	568,299	0,028	0,012551724
Signal Boards	2023	121	175	Signal Boards_2023_175	9,619	0,244	3,045	1,602	0,006	0,075	0,075	568,299	0,022	0,009862069
Signal Boards	2023	176	250	Signal Boards_2023_250	12,678	0,235	1,263	1,562	0,007	0,048	0,048	686,695	0,021	0,009413793
Signal Boards	2024	6	15	Signal Boards_2024_15	1,04	0,661	3,469	4,142	0,008	0,161	0,161	568,299	0,059	0,026448276
Signal Boards	2024	26	50	Signal Boards_2024_50	5,168	0,559	4,247	3,662	0,007	0,114	0,114	568,299	0,05	0,022413793
Signal Boards	2024	51	120	Signal Boards_2024_120	6,055	0,296	3,474	2,315	0,006	0,105	0,105	568,299	0,026	0,011655172
Signal Boards	2024	121	175	Signal Boards_2024_175	9,047	0,229	3,047	1,427	0,006	0,065	0,065	568,299	0,02	0,008965517
Signal Boards	2024	176	250	Signal Boards_2024_250	12,079	0,224	1,259	1,37	0,007	0,041	0,041	686,695	0,02	0,008965517
Signal Boards	2025	6	15	Signal Boards_2025_15	1,04	0,661	3,469	4,142	0,008	0,161	0,161	568,299	0,059	0,026448276
Signal Boards	2025	26	50	Signal Boards_2025_50	4,819	0,522	4,217	3,561	0,007	0,098	0,098	568,299	0,047	0,021068966
Signal Boards	2025	51	120	Signal Boards_2025_120	5,705	0,278	3,47	2,179	0,006	0,089	0,089	568,299	0,025	0,011206897
Signal Boards	2025	121	175	Signal Boards_2025_175	8,5	0,215	3,049	1,262	0,006	0,055	0,055	568,299	0,019	0,008517241
Signal Boards	2025	176	250	Signal Boards_2025_250	11,509	0,213	1,257	1,192	0,007	0,035	0,035	686,695	0,019	0,008517241

Signal Boards	2030	6	15	Signal Boards_2030_15	1,04	0,661	3,47	4,142	0,008	0,161	0,161	568,299	0,059	0,026448276
Signal Boards	2030	26	50	Signal Boards_2030_50	3,631	0,393	4,099	3,193	0,007	0,04	0,04	568,299	0,035	0,015689655
Signal Boards	2030	51	120	Signal Boards_2030_120	4,366	0,213	3,451	1,657	0,006	0,035	0,035	568,3	0,019	0,008517241
Signal Boards	2030	121	175	Signal Boards_2030_175	6,201	0,157	3,048	0,586	0,006	0,024	0,024	568,299	0,014	0,006275862
Signal Boards	2030	176	250	Signal Boards_2030_250	9,484	0,176	1,255	0,594	0,007	0,019	0,019	686,695	0,015	0,006724138
Signal Boards	2035	6	15	Signal Boards_2035_15	1,04	0,661	3,469	4,142	0,008	0,161	0,161	568,299	0,059	0,026448276
Signal Boards	2035	26	50	Signal Boards_2035_50	3,294	0,356	4,067	3,082	0,007	0,02	0,02	568,299	0,032	0,014344828
Signal Boards	2035	51	120	Signal Boards_2035_120	3,929	0,192	3,445	1,482	0,006	0,018	0,018	568,299	0,017	0,00762069
Signal Boards	2035	121	175	Signal Boards_2035_175	5,439	0,138	3,048	0,372	0,006	0,014	0,014	568,299	0,012	0,00537931
Signal Boards	2035	176	250	Signal Boards_2035_250	8,75	0,162	1,254	0,401	0,007	0,014	0,014	686,695	0,014	0,006275862
Signal Boards	2040	6	15	Signal Boards_2040_15	1,04	0,661	3,469	4,142	0,008	0,161	0,161	568,299	0,059	0,026448276
Signal Boards	2040	26	50	Signal Boards_2040_50	3,289	0,356	4,074	3,037	0,007	0,014	0,014	568,299	0,032	0,014344828
Signal Boards	2040	51	120	Signal Boards_2040_120	3,848	0,188	3,447	1,428	0,006	0,013	0,013	568,299	0,016	0,007172414
Signal Boards	2040	121	175	Signal Boards_2040_175	5,177	0,131	3,05	0,296	0,006	0,011	0,011	568,299	0,011	0,004931034
Signal Boards	2040	176	250	Signal Boards_2040_250	8,473	0,157	1,255	0,341	0,007	0,012	0,012	686,695	0,014	0,006275862
Skid Steer Loaders	1990	16	25	Skid Steer Loaders_1990_25	4,928	2,213	4,999	6,919	0,855	0,741	0,741	568,299	0,199	0,089206897
Skid Steer Loaders	1990	26	50	Skid Steer Loaders_1990_50	18,4	4,466	9,113	7,821	0,871	1,202	1,202	568,299	0,403	0,180655172
Skid Steer Loaders	1990	51	120	Skid Steer Loaders_1990_120	15,551	2,252	5,536	14,506	0,791	1,262	1,262	568,299	0,203	0,091
Skid Steer Loaders	2000	16	25	Skid Steer Loaders_2000_25	4,659	2,092	4,777	6,403	0,065	0,568	0,568	568,299	0,188	0,084275862
Skid Steer Loaders	2000	26	50	Skid Steer Loaders_2000_50	15,338	3,723	7,849	6,733	0,066	0,816	0,816	568,299	0,335	0,150172414
Skid Steer Loaders	2000	51	120	Skid Steer Loaders_2000_120	10,902	1,579	4,162	9,028	0,06	0,779	0,779	568,299	0,142	0,063655172
Skid Steer Loaders	2005	16	25	Skid Steer Loaders_2005_25	3,352	1,505	3,709	5,913	0,065	0,461	0,461	568,299	0,135	0,060517241
Skid Steer Loaders	2005	26	50	Skid Steer Loaders_2005_50	12,458	3,024	6,864	6,068	0,066	0,716	0,716	568,3	0,272	0,121931034
Skid Steer Loaders	2005	51	120	Skid Steer Loaders_2005_120	9,248	1,339	3,988	7,653	0,06	0,712	0,712	568,299	0,12	0,053793103
Skid Steer Loaders	2010	16	25	Skid Steer Loaders_2010_25	1,189544	1	4,48486	5,29745	0,005	0,435	0,401	586,3356	0,171	0,076655172
Skid Steer Loaders	2010	26	50	Skid Steer Loaders_2010_50	1,189544	1	4,48486	5,29745	0,005	0,435	0,401	586,3356	0,171	0,076655172
Skid Steer Loaders	2010	51	120	Skid Steer Loaders_2010_120	0,504832	0,424	3,40768	5,19396	0,005	0,344	0,317	525,6915	0,153	0,068586207
Skid Steer Loaders	2011	16	25	Skid Steer Loaders_2011_25	1,055747	0,887	4,32754	5,2163	0,005	0,402	0,37	584,7285	0,171	0,076655172
Skid Steer Loaders	2011	26	50	Skid Steer Loaders_2011_50	1,055747	0,887	4,32754	5,2163	0,005	0,402	0,37	584,7285	0,171	0,076655172
Skid Steer Loaders	2011	51	120	Skid Steer Loaders_2011_120	0,460213	0,387	3,38539	4,88341	0,005	0,316	0,291	524,0915	0,153	0,068586207
Skid Steer Loaders	2012	16	25	Skid Steer Loaders_2012_25	1,031332	0,867	4,33156	5,12974	0,005	0,388	0,357	583,1258	0,171	0,076655172
Skid Steer Loaders	2012	26	50	Skid Steer Loaders_2012_50	1,031332	0,867	4,33156	5,12974	0,005	0,388	0,357	583,1258	0,171	0,076655172
Skid Steer Loaders	2012	51	120	Skid Steer Loaders_2012_120	0,443294	0,372	3,38462	4,73478	0,005	0,303	0,279	522,5357	0,153	0,068586207
Skid Steer Loaders	2013	16	25	Skid Steer Loaders_2013_25	0,908612	0,763	4,17576	4,84472	0,005	0,337	0,31	580,0144	0,171	0,076655172
Skid Steer Loaders	2013	26	50	Skid Steer Loaders_2013_50	0,908612	0,763	4,17576	4,84472	0,005	0,337	0,31	580,0144	0,171	0,076655172
Skid Steer Loaders	2013	51	120	Skid Steer Loaders_2013_120	0,404938	0,34	3,36337	4,44237	0,005	0,271	0,249	519,6388	0,153	0,068586207
Skid Steer Loaders	2014	16	25	Skid Steer Loaders_2014_25	0,790746	0,664	4,01585	4,54075	0,005	0,286	0,263	577,0757	0,171	0,076655172
Skid Steer Loaders	2014	26	50	Skid Steer Loaders_2014_50	0,790746	0,664	4,01585	4,54075	0,005	0,286	0,263	577,0757	0,171	0,076655172
Skid Steer Loaders	2014	51	120	Skid Steer Loaders_2014_120	0,361873	0,304	3,33829	4,0133	0,005	0,235	0,216	517,0621	0,153	0,068586207
Skid Steer Loaders	2015	16	25	Skid Steer Loaders_2015_25	0,760751	0,639	4,00436	4,43612	0,005	0,267	0,246	571,4195	0,171	0,076655172
Skid Steer Loaders	2015	26	50	Skid Steer Loaders_2015_50	0,760751	0,639	4,00436	4,43612	0,005	0,267	0,246	571,4195	0,171	0,076655172
Skid Steer Loaders	2015	51	120	Skid Steer Loaders_2015_120	0,349713	0,294	3,33751	3,8106	0,005	0,22	0,203	511,595	0,153	0,068586207
Skid Steer Loaders	2016	16	25	Skid Steer Loaders_2016_25	0,713135	0,599	3,95661	4,26784	0,005	0,241	0,221	565,2281	0,17	0,076206897
Skid Steer Loaders	2016	26	50	Skid Steer Loaders_2016_50	0,713135	0,599	3,95661	4,26784	0,005	0,241	0,221	565,2281	0,17	0,076206897
Skid Steer Loaders	2016	51	120	Skid Steer Loaders_2016_120	0,325064	0,273	3,32767	3,53439	0,005	0,197	0,182	506,2971	0,153	0,068586207
Skid Steer Loaders	2017	16	25	Skid Steer Loaders_2017_25	0,676461	0,568	3,91907	4,11272	0,005	0,217	0,2	556,7144	0,171	0,076655172
Skid Steer Loaders	2017	26	50	Skid Steer Loaders_2017_50	0,676461	0,568	3,91907	4,11272	0,005	0,217	0,2	556,7144	0,171	0,076655172
Skid Steer Loaders	2017	51	120	Skid Steer Loaders_2017_120	0,303772	0,255	3,31863	3,28618	0,005	0,177	0,162	498,3256	0,153	0,068586207
Skid Steer Loaders	2018	16	25	Skid Steer Loaders_2018_25	0,579635	0,487	3,78725	3,88962	0,005	0,178	0,164	547,5575	0,17	0,076206897
Skid Steer Loaders	2018	26	50	Skid Steer Loaders_2018_50	0,579635	0,487	3,78725	3,88962	0,005	0,178	0,164	547,5575	0,17	0,076206897
Skid Steer Loaders	2018	51	120	Skid Steer Loaders_2018_120	0,256853	0,216	3,28204	2,86	0,005	0,14	0,129	490,0935	0,153	0,068586207
Skid Steer Loaders	2019	16	25	Skid Steer Loaders_2019_25	0,531282	0,446	3,73957	3,75009	0,005	0,154	0,141	539,2667	0,171	0,076655172
Skid Steer Loaders	2019	26	50	Skid Steer Loaders_2019_50	0,531282	0,446	3,73957	3,75009	0,005	0,154	0,141	539,2667	0,171	0,076655172
Skid Steer Loaders	2019	51	120	Skid Steer Loaders_2019_120	0,2373	0,199	3,27736	2,65586	0,005	0,122	0,112	482,3844	0,153	0,068586207
Skid Steer Loaders	2020	16	25	Skid Steer Loaders_2020_25	0,522771	0,439	3,76397	3,69113	0,005	0,145	0,133	527,7577	0,171	0,076655172
Skid Steer Loaders	2020	26	50	Skid Steer Loaders_2020_50	0,522771	0,439	3,76397	3,69113	0,005	0,145	0,133	527,7577	0,171	0,076655172
Skid Steer Loaders	2020	51	120	Skid Steer Loaders_2020_120	0,224183	0,188	3,2771	2,5046	0,005	0,108	0,1	471,9075	0,153	0,068586207
Skid Steer Loaders	2021	16	25	Skid Steer Loaders_2021_25	0,486515	0,409	3,73158	3,57304	0,005	0,126	0,116	527,4501	0,171	0,076655172
Skid Steer Loaders	2021	26	50	Skid Steer Loaders_2021_50	0,486515	0,409	3,73158	3,57304	0,005	0,126	0,116	527,4501	0,171	0,076655172
Skid Steer Loaders	2021	51	120	Skid Steer Loaders_2021_120	0,211817	0,178	3,27687	2,36588	0,005	0,096	0,089	471,9774	0,153	0,068586207
Skid Steer Loaders	2022	16	25	Skid Steer Loaders_2022_25	0,434318	0,365	3,65597	3,43256	0,005	0,103	0,095	527,2726	0,171	0,076655172
Skid Steer Loaders	2022	26	50	Skid Steer Loaders_2022_50	0,434318	0,365	3,65597	3,43256	0,005	0,103	0,095	527,2726	0,171	0,076655172
Skid Steer Loaders	2022	51	120	Skid Steer Loaders_2022_120	0,195311	0,164	3,27037	2,18922	0,005	0,081	0,075	472,4321	0,153	0,068586207
Skid Steer Loaders	2023	16	25	Skid Steer Loaders_2023_25	0,420524	0,353	3,65358	3,37057	0,005	0,093	0,086	527,4231	0,171	0,076655172
Skid Steer Loaders	2023	26	50	Skid Steer Loaders_2023_50	0,420524	0,353	3,65358	3,37057	0,005	0,093	0,086	527,4231	0,171	0,076655172
Skid Steer Loaders	2023	51	120	Skid Steer Loaders_2023_120	0,182613	0,153	3,26613	2,03854	0,005	0,069	0,063	472,656	0,153	0,068586207
Skid Steer Loaders	2024	16	25	Skid Steer Loaders_2024_25	0,415881	0,349	3,67076	3,34552	0,005	0,089	0,082	527,8005	0,171	0,076655172
Skid Steer Loaders	2024	26	50	Skid Steer Loaders_2024_50	0,415881	0,349	3,67076	3,34552	0,005	0,089	0,082	527,8005	0,171	0,076655172
Skid Steer Loaders	2024	51	120	Skid Steer Loaders_2024_120	0,174841	0,147	3,26403	1,94841	0,005	0,063	0,058	472,847	0,153	0,068586207
Skid Steer Loaders	2025	16	25	Skid Steer Loaders_2025_25	0,406183	0,341	3,6601	3,30934	0,005	0,084	0,077	527,8608	0,171	0,076655172
Skid Steer Loaders	2025	26	50	Skid Steer Loaders_2025_50	0,406183	0,341	3,6601	3,30934	0,005	0,084	0,077	527,8608	0,171	0,076655172
Skid Steer Loaders	2025	51	120	Skid Steer Loaders_2025_120	0,166357	0,14	3,25156	1,86736	0,005	0,057	0,052	472,6295	0,153	0,068586207
Skid Steer Loaders	2030	16	25	Skid Steer Loaders_2030_25	1,526	0,685	2,34	4,332	0,007	0,162	0,162	568,299	0,061	0,027344828

Skid Steer Loaders	2030	26	50	Skid Steer Loaders_2030_50	1,694	0,411	4,386	3,128	0,007	0,018	0,018	568,299	0,037	0,016586207
Skid Steer Loaders	2030	51	120	Skid Steer Loaders_2030_120	1,478	0,214	3,538	1,477	0,006	0,017	0,017	568,299	0,019	0,008517241
Skid Steer Loaders	2035	16	25	Skid Steer Loaders_2035_25	1,526	0,685	2,339	4,332	0,007	0,161	0,161	568,299	0,061	0,027344828
Skid Steer Loaders	2035	26	50	Skid Steer Loaders_2035_50	1,694	0,411	4,39	3,097	0,007	0,015	0,015	568,299	0,037	0,016586207
Skid Steer Loaders	2035	51	120	Skid Steer Loaders_2035_120	1,459	0,211	3,54	1,442	0,006	0,014	0,014	568,299	0,019	0,008517241
Skid Steer Loaders	2040	16	25	Skid Steer Loaders_2040_25	1,526	0,685	2,339	4,332	0,007	0,161	0,161	568,299	0,061	0,027344828
Skid Steer Loaders	2040	26	50	Skid Steer Loaders_2040_50	1,696	0,411	4,392	3,093	0,007	0,014	0,014	568,299	0,037	0,016586207
Skid Steer Loaders	2040	51	120	Skid Steer Loaders_2040_120	1,456	0,211	3,54	1,435	0,006	0,013	0,013	568,3	0,019	0,008517241
Surfacing Equipment	1990	26	50	Surfacing Equipment_1990_50	8,011	4,203	8,629	7,726	0,871	1,147	1,147	568,299	0,379	0,169896552
Surfacing Equipment	1990	51	120	Surfacing Equipment_1990_120	18,985	2,203	5,473	14,403	0,791	1,214	1,214	568,299	0,198	0,088758621
Surfacing Equipment	1990	121	175	Surfacing Equipment_1990_175	19,781	1,707	4,883	13,91	0,758	0,927	0,927	568,3	0,154	0,069034483
Surfacing Equipment	1990	176	250	Surfacing Equipment_1990_250	31,103	1,707	4,883	13,91	0,758	0,927	0,927	568,299	0,154	0,069034483
Surfacing Equipment	1990	251	500	Surfacing Equipment_1990_500	45,625	1,526	9,66	13,316	0,662	0,805	0,805	568,299	0,137	0,061413793
Surfacing Equipment	1990	501	750	Surfacing Equipment_1990_750	71,58	1,526	9,66	13,316	1,018	0,82	0,82	568,299	0,137	0,061413793
Surfacing Equipment	2000	26	50	Surfacing Equipment_2000_50	6,689	3,509	7,426	6,755	0,066	0,779	0,779	568,299	0,316	0,141655172
Surfacing Equipment	2000	51	120	Surfacing Equipment_2000_120	14,399	1,671	4,385	9,991	0,06	0,768	0,768	568,299	0,15	0,067241379
Surfacing Equipment	2000	121	175	Surfacing Equipment_2000_175	13,132	1,133	3,583	9,132	0,057	0,458	0,458	568,299	0,102	0,045724138
Surfacing Equipment	2000	176	250	Surfacing Equipment_2000_250	17,689	0,97	2,937	8,84	0,057	0,385	0,385	568,299	0,087	0,039
Surfacing Equipment	2000	251	500	Surfacing Equipment_2000_500	26,875	0,899	4,584	8,551	0,05	0,347	0,347	568,299	0,081	0,036310345
Surfacing Equipment	2000	501	750	Surfacing Equipment_2000_750	42,164	0,899	4,584	8,551	0,052	0,347	0,347	568,299	0,081	0,036310345
Surfacing Equipment	2005	26	50	Surfacing Equipment_2005_50	6,001	3,148	6,936	6,318	0,066	0,727	0,727	568,3	0,284	0,127310345
Surfacing Equipment	2005	51	120	Surfacing Equipment_2005_120	12,568	1,458	4,122	8,636	0,06	0,718	0,718	568,299	0,131	0,058724138
Surfacing Equipment	2005	121	175	Surfacing Equipment_2005_175	11,032	0,952	3,316	7,874	0,057	0,402	0,402	568,3	0,085	0,038103448
Surfacing Equipment	2005	176	250	Surfacing Equipment_2005_250	13,31	0,73	2,16	7,529	0,057	0,29	0,29	568,299	0,065	0,029137931
Surfacing Equipment	2005	251	500	Surfacing Equipment_2005_500	19,448	0,65	3,023	6,988	0,05	0,26	0,26	568,299	0,058	0,026
Surfacing Equipment	2005	501	750	Surfacing Equipment_2005_750	31,164	0,664	3,019	7,132	0,052	0,262	0,262	568,299	0,059	0,026448276
Surfacing Equipment	2010	26	50	Surfacing Equipment_2010_50	1,528976	1,285	4,99949	5,66618	0,005	0,479	0,44	593,0498	0,173	0,077551724
Surfacing Equipment	2010	51	120	Surfacing Equipment_2010_120	0,730908	0,614	3,59404	6,16537	0,005	0,437	0,402	524,0289	0,153	0,068586207
Surfacing Equipment	2010	121	175	Surfacing Equipment_2010_175	0,662829	0,557	3,09066	6,60554	0,005	0,318	0,292	522,4909	0,152	0,068137931
Surfacing Equipment	2010	176	250	Surfacing Equipment_2010_250	0,488779	0,411	1,7501	6,37687	0,005	0,212	0,195	530,3611	0,154	0,069034483
Surfacing Equipment	2010	251	500	Surfacing Equipment_2010_500	0,29849	0,251	1,5491	4,43284	0,005	0,144	0,133	522,9659	0,152	0,068137931
Surfacing Equipment	2010	501	750	Surfacing Equipment_2010_750	0,208991	0,176	1,09654	3,5514	0,005	0,112	0,103	524,8847	0,153	0,068586207
Surfacing Equipment	2011	26	50	Surfacing Equipment_2011_50	1,476255	1,24	4,95391	5,62022	0,005	0,467	0,43	590,2612	0,172	0,077103448
Surfacing Equipment	2011	51	120	Surfacing Equipment_2011_120	0,710662	0,597	3,58797	5,98734	0,005	0,427	0,393	522,8446	0,153	0,068586207
Surfacing Equipment	2011	121	175	Surfacing Equipment_2011_175	0,6472	0,544	3,07389	6,46356	0,005	0,312	0,287	521,1883	0,152	0,068137931
Surfacing Equipment	2011	176	250	Surfacing Equipment_2011_250	0,481299	0,404	1,72048	6,2863	0,005	0,207	0,191	529,0217	0,154	0,069034483
Surfacing Equipment	2011	251	500	Surfacing Equipment_2011_500	0,289572	0,243	1,48634	4,26701	0,005	0,136	0,125	520,4212	0,152	0,068137931
Surfacing Equipment	2011	501	750	Surfacing Equipment_2011_750	0,214952	0,181	1,10325	3,56055	0,005	0,113	0,104	523,5482	0,153	0,068586207
Surfacing Equipment	2012	26	50	Surfacing Equipment_2012_50	1,500607	1,261	5,03037	5,63914	0,005	0,473	0,435	588,7118	0,172	0,077103448
Surfacing Equipment	2012	51	120	Surfacing Equipment_2012_120	0,709653	0,596	3,59999	5,94999	0,005	0,426	0,392	521,4233	0,153	0,068586207
Surfacing Equipment	2012	121	175	Surfacing Equipment_2012_175	0,653605	0,549	3,0893	6,48747	0,005	0,315	0,29	519,886	0,152	0,068137931
Surfacing Equipment	2012	176	250	Surfacing Equipment_2012_250	0,481696	0,405	1,72816	6,22653	0,005	0,207	0,191	527,6815	0,154	0,069034483
Surfacing Equipment	2012	251	500	Surfacing Equipment_2012_500	0,290035	0,244	1,49574	4,20283	0,005	0,134	0,124	519,0487	0,152	0,068137931
Surfacing Equipment	2012	501	750	Surfacing Equipment_2012_750	0,210249	0,177	1,04051	3,45723	0,005	0,109	0,1	521,0672	0,152	0,068137931
Surfacing Equipment	2013	26	50	Surfacing Equipment_2013_50	1,455428	1,223	4,99596	5,53803	0,005	0,457	0,421	585,7193	0,172	0,077103448
Surfacing Equipment	2013	51	120	Surfacing Equipment_2013_120	0,69949	0,588	3,60266	5,8163	0,005	0,415	0,382	518,7481	0,153	0,068586207
Surfacing Equipment	2013	121	175	Surfacing Equipment_2013_175	0,588968	0,495	3,00889	5,94134	0,005	0,286	0,263	518,4738	0,152	0,068137931
Surfacing Equipment	2013	176	250	Surfacing Equipment_2013_250	0,441295	0,371	1,62196	5,8812	0,005	0,187	0,172	524,5301	0,154	0,069034483
Surfacing Equipment	2013	251	500	Surfacing Equipment_2013_500	0,288988	0,243	1,50462	4,09243	0,005	0,131	0,121	516,1488	0,152	0,068137931
Surfacing Equipment	2013	501	750	Surfacing Equipment_2013_750	0,215353	0,181	1,04387	3,46124	0,005	0,11	0,101	518,3853	0,152	0,068137931
Surfacing Equipment	2014	26	50	Surfacing Equipment_2014_50	1,358041	1,141	4,87668	5,42525	0,005	0,434	0,399	582,7249	0,172	0,077103448
Surfacing Equipment	2014	51	120	Surfacing Equipment_2014_120	0,665267	0,559	3,58043	5,52029	0,005	0,391	0,36	516,3377	0,153	0,068586207
Surfacing Equipment	2014	121	175	Surfacing Equipment_2014_175	0,561853	0,472	3,01212	5,71146	0,005	0,273	0,251	515,8203	0,152	0,068137931
Surfacing Equipment	2014	176	250	Surfacing Equipment_2014_250	0,364211	0,306	1,43363	5,10182	0,005	0,149	0,137	521,4518	0,154	0,069034483
Surfacing Equipment	2014	251	500	Surfacing Equipment_2014_500	0,2821	0,237	1,50147	3,8952	0,005	0,125	0,115	513,6157	0,152	0,068137931
Surfacing Equipment	2014	501	750	Surfacing Equipment_2014_750	0,206755	0,174	1,02007	3,28435	0,005	0,103	0,095	516,3212	0,153	0,068586207
Surfacing Equipment	2015	26	50	Surfacing Equipment_2015_50	1,223408	1,028	4,69178	5,25471	0,005	0,402	0,37	576,7706	0,172	0,077103448
Surfacing Equipment	2015	51	120	Surfacing Equipment_2015_120	0,651534	0,547	3,57496	5,37414	0,005	0,378	0,348	510,1417	0,152	0,068137931
Surfacing Equipment	2015	121	175	Surfacing Equipment_2015_175	0,568	0,477	3,02727	5,73307	0,005	0,276	0,254	510,5481	0,152	0,068137931
Surfacing Equipment	2015	176	250	Surfacing Equipment_2015_250	0,36864	0,31	1,44156	5,11205	0,005	0,151	0,139	516,058	0,154	0,069034483
Surfacing Equipment	2015	251	500	Surfacing Equipment_2015_500	0,286581	0,241	1,51303	3,90037	0,005	0,126	0,116	508,3985	0,152	0,068137931
Surfacing Equipment	2015	501	750	Surfacing Equipment_2015_750	0,211433	0,178	1,02353	3,28678	0,005	0,104	0,096	511,1157	0,153	0,068586207
Surfacing Equipment	2016	26	50	Surfacing Equipment_2016_50	1,243319	1,045	4,7626	5,27275	0,005	0,406	0,374	570,8145	0,172	0,077103448
Surfacing Equipment	2016	51	120	Surfacing Equipment_2016_120	0,621267	0,522	3,54977	5,05142	0,005	0,349	0,321	505,0873	0,152	0,068137931
Surfacing Equipment	2016	121	175	Surfacing Equipment_2016_175	0,544572	0,458	3,00649	5,45794	0,005	0,265	0,244	504,5576	0,152	0,068137931
Surfacing Equipment	2016	176	250	Surfacing Equipment_2016_250	0,365495	0,307	1,42946	5,04791	0,005	0,148	0,136	510,7058	0,154	0,069034483
Surfacing Equipment	2016	251	500	Surfacing Equipment_2016_500	0,258417	0,217	1,42484	3,46816	0,005	0,111	0,102	502,4709	0,152	0,068137931
Surfacing Equipment	2016	501	750	Surfacing Equipment_2016_750	0,192579	0,162	0,99966	2,87955	0,005	0,093	0,085	506,967	0,153	0,068586207
Surfacing Equipment	2017	26	50	Surfacing Equipment_2017_50	1,10469	0,928	4,60324	5,0643	0,006	0,365	0,336	564,4772	0,173	0,077551724
Surfacing Equipment	2017	51	120	Surfacing Equipment_2017_120	0,604716	0,508	3,55587	4,94212	0,005	0,337	0,31	498,36	0,153	0,068586207
Surfacing Equipment	2017	121	175	Surfacing Equipment_2017_175	0,541755	0,455	3,00273	5,39296	0,005	0,264	0,243	496,2741	0,152	0,068137931
Surfacing Equipment	2017	176	250	Surfacing Equipment_2017_250	0,325463	0,273	1,3431	4,46793	0,005	0,129	0,119	501,8465	0,154	0,069034483
Surfacing Equipment	2017	251	500	Surfacing Equipment_2017_500	0,242435	0,204	1,3962	3,10636	0,005	0,103	0,094	496,885	0,152	0,068137931

Surfacing Equipment	2017	501	750	Surfacing Equipment_2017_750	0,190932	0,16	1,00272	2,76955	0,005	0,09	0,083	499,7117	0,153	0,068586207
Surfacing Equipment	2018	26	50	Surfacing Equipment_2018_50	0,927049	0,779	4,35302	4,81982	0,006	0,32	0,294	555,7363	0,173	0,077551724
Surfacing Equipment	2018	51	120	Surfacing Equipment_2018_120	0,49279	0,414	3,48871	4,28388	0,005	0,268	0,247	491,3172	0,153	0,068586207
Surfacing Equipment	2018	121	175	Surfacing Equipment_2018_175	0,44632	0,375	2,97609	4,47527	0,005	0,215	0,198	488,4406	0,152	0,068137931
Surfacing Equipment	2018	176	250	Surfacing Equipment_2018_250	0,286758	0,241	1,234	3,98866	0,005	0,113	0,104	494,1388	0,154	0,069034483
Surfacing Equipment	2018	251	500	Surfacing Equipment_2018_500	0,187325	0,157	1,22557	2,20389	0,005	0,076	0,07	487,8722	0,152	0,068137931
Surfacing Equipment	2018	501	750	Surfacing Equipment_2018_750	0,169556	0,142	0,99347	2,26863	0,005	0,078	0,072	488,86	0,152	0,068137931
Surfacing Equipment	2019	26	50	Surfacing Equipment_2019_50	0,765383	0,643	4,0998	4,41999	0,006	0,25	0,23	547,0462	0,173	0,077551724
Surfacing Equipment	2019	51	120	Surfacing Equipment_2019_120	0,42278	0,355	3,44856	3,82306	0,005	0,226	0,208	484,0757	0,153	0,068586207
Surfacing Equipment	2019	121	175	Surfacing Equipment_2019_175	0,425034	0,357	2,97177	4,23866	0,005	0,204	0,187	479,6717	0,152	0,068137931
Surfacing Equipment	2019	176	250	Surfacing Equipment_2019_250	0,257694	0,217	1,21576	3,39993	0,005	0,101	0,093	486,8417	0,154	0,069034483
Surfacing Equipment	2019	251	500	Surfacing Equipment_2019_500	0,173135	0,145	1,2143	1,89944	0,005	0,068	0,063	481,8965	0,152	0,068137931
Surfacing Equipment	2019	501	750	Surfacing Equipment_2019_750	0,168821	0,142	0,99372	2,17879	0,005	0,076	0,07	480,166	0,152	0,068137931
Surfacing Equipment	2020	26	50	Surfacing Equipment_2020_50	0,637406	0,536	3,93357	4,23906	0,006	0,216	0,199	535,5275	0,173	0,077551724
Surfacing Equipment	2020	51	120	Surfacing Equipment_2020_120	0,392345	0,33	3,43932	3,61216	0,005	0,206	0,19	473,8188	0,153	0,068586207
Surfacing Equipment	2020	121	175	Surfacing Equipment_2020_175	0,365927	0,307	2,93068	3,67232	0,005	0,175	0,161	469,2079	0,152	0,068137931
Surfacing Equipment	2020	176	250	Surfacing Equipment_2020_250	0,252128	0,212	1,21774	3,22243	0,005	0,097	0,089	476,4261	0,154	0,069034483
Surfacing Equipment	2020	251	500	Surfacing Equipment_2020_500	0,173203	0,146	1,21902	1,83755	0,005	0,067	0,062	471,6331	0,153	0,068586207
Surfacing Equipment	2020	501	750	Surfacing Equipment_2020_750	0,168871	0,142	0,99569	2,09374	0,005	0,074	0,068	469,6252	0,152	0,068137931
Surfacing Equipment	2021	26	50	Surfacing Equipment_2021_50	0,60314	0,507	3,93231	4,18875	0,006	0,204	0,188	535,784	0,173	0,077551724
Surfacing Equipment	2021	51	120	Surfacing Equipment_2021_120	0,370907	0,312	3,43619	3,46112	0,005	0,191	0,175	474,0906	0,153	0,068586207
Surfacing Equipment	2021	121	175	Surfacing Equipment_2021_175	0,307112	0,258	2,91895	3,09858	0,005	0,145	0,134	469,1687	0,152	0,068137931
Surfacing Equipment	2021	176	250	Surfacing Equipment_2021_250	0,245986	0,207	1,21854	2,99364	0,005	0,092	0,085	476,8023	0,154	0,069034483
Surfacing Equipment	2021	251	500	Surfacing Equipment_2021_500	0,167588	0,141	1,20226	1,75282	0,005	0,064	0,058	471,7484	0,153	0,068586207
Surfacing Equipment	2021	501	750	Surfacing Equipment_2021_750	0,148862	0,125	0,99181	1,59712	0,005	0,062	0,057	470,4087	0,152	0,068137931
Surfacing Equipment	2022	26	50	Surfacing Equipment_2022_50	0,509163	0,428	3,77243	3,9114	0,006	0,154	0,142	535,8364	0,173	0,077551724
Surfacing Equipment	2022	51	120	Surfacing Equipment_2022_120	0,34882	0,293	3,40936	3,24974	0,005	0,175	0,161	473,6362	0,153	0,068586207
Surfacing Equipment	2022	121	175	Surfacing Equipment_2022_175	0,283918	0,239	2,90957	2,70137	0,005	0,13	0,12	469,1259	0,152	0,068137931
Surfacing Equipment	2022	176	250	Surfacing Equipment_2022_250	0,233135	0,196	1,21737	2,66709	0,005	0,085	0,078	476,9511	0,154	0,069034483
Surfacing Equipment	2022	251	500	Surfacing Equipment_2022_500	0,157417	0,132	1,16047	1,5573	0,005	0,057	0,053	470,5248	0,152	0,068137931
Surfacing Equipment	2022	501	750	Surfacing Equipment_2022_750	0,136805	0,115	0,98819	1,35503	0,005	0,052	0,048	470,4004	0,152	0,068137931
Surfacing Equipment	2023	26	50	Surfacing Equipment_2023_50	0,51987	0,437	3,83184	3,92432	0,006	0,155	0,143	535,9295	0,173	0,077551724
Surfacing Equipment	2023	51	120	Surfacing Equipment_2023_120	0,321277	0,27	3,39556	3,05811	0,005	0,157	0,144	474,4698	0,153	0,068586207
Surfacing Equipment	2023	121	175	Surfacing Equipment_2023_175	0,267066	0,224	2,91383	2,45516	0,005	0,119	0,11	470,0141	0,152	0,068137931
Surfacing Equipment	2023	176	250	Surfacing Equipment_2023_250	0,22795	0,192	1,21946	2,50162	0,005	0,082	0,075	476,9606	0,154	0,069034483
Surfacing Equipment	2023	251	500	Surfacing Equipment_2023_500	0,156473	0,131	1,16329	1,47556	0,005	0,056	0,051	470,3746	0,152	0,068137931
Surfacing Equipment	2023	501	750	Surfacing Equipment_2023_750	0,119512	0,1	0,98543	1,08063	0,005	0,04	0,037	472,4466	0,153	0,068586207
Surfacing Equipment	2024	26	50	Surfacing Equipment_2024_50	0,396453	0,333	3,66193	3,72069	0,006	0,116	0,107	536,0304	0,173	0,077551724
Surfacing Equipment	2024	51	120	Surfacing Equipment_2024_120	0,29879	0,251	3,3893	2,8828	0,005	0,142	0,131	475,3806	0,154	0,069034483
Surfacing Equipment	2024	121	175	Surfacing Equipment_2024_175	0,271298	0,228	2,92962	2,46372	0,005	0,12	0,111	470,0767	0,152	0,068137931
Surfacing Equipment	2024	176	250	Surfacing Equipment_2024_250	0,209166	0,176	1,18272	2,23638	0,005	0,071	0,065	477,096	0,154	0,069034483
Surfacing Equipment	2024	251	500	Surfacing Equipment_2024_500	0,159183	0,134	1,16767	1,47769	0,005	0,056	0,051	470,2521	0,152	0,068137931
Surfacing Equipment	2024	501	750	Surfacing Equipment_2024_750	0,112194	0,094	0,98493	0,94669	0,005	0,034	0,032	472,9833	0,153	0,068586207
Surfacing Equipment	2025	26	50	Surfacing Equipment_2025_50	0,279239	0,235	3,53733	3,57642	0,006	0,082	0,075	536,14	0,173	0,077551724
Surfacing Equipment	2025	51	120	Surfacing Equipment_2025_120	0,276433	0,232	3,38535	2,6591	0,005	0,124	0,114	476,7656	0,154	0,069034483
Surfacing Equipment	2025	121	175	Surfacing Equipment_2025_175	0,222452	0,187	2,92602	1,9987	0,005	0,094	0,087	471,0403	0,152	0,068137931
Surfacing Equipment	2025	176	250	Surfacing Equipment_2025_250	0,176026	0,148	1,14337	1,74736	0,005	0,055	0,051	477,11	0,154	0,069034483
Surfacing Equipment	2025	251	500	Surfacing Equipment_2025_500	0,152175	0,128	1,16861	1,3268	0,005	0,051	0,047	470,2827	0,152	0,068137931
Surfacing Equipment	2025	501	750	Surfacing Equipment_2025_750	0,101486	0,085	0,9776	0,76806	0,005	0,027	0,025	470,5508	0,152	0,068137931
Surfacing Equipment	2030	26	50	Surfacing Equipment_2030_50	0,988	0,518	4,295	3,4	0,007	0,075	0,075	568,299	0,046	0,02062069
Surfacing Equipment	2030	51	120	Surfacing Equipment_2030_120	2,281	0,264	3,492	1,959	0,006	0,068	0,068	568,299	0,023	0,010310345
Surfacing Equipment	2030	121	175	Surfacing Equipment_2030_175	2,286	0,197	3,071	0,939	0,006	0,043	0,043	568,299	0,017	0,00762069
Surfacing Equipment	2030	176	250	Surfacing Equipment_2030_250	3,134	0,172	1,064	0,789	0,006	0,026	0,026	568,299	0,015	0,006724138
Surfacing Equipment	2030	251	500	Surfacing Equipment_2030_500	5,062	0,169	1,032	0,738	0,005	0,025	0,025	568,299	0,015	0,006724138
Surfacing Equipment	2030	501	750	Surfacing Equipment_2030_750	7,953	0,169	1,032	0,749	0,005	0,025	0,025	568,299	0,015	0,006724138
Surfacing Equipment	2035	26	50	Surfacing Equipment_2035_50	0,836	0,439	4,221	3,193	0,007	0,041	0,041	568,299	0,039	0,017482759
Surfacing Equipment	2035	51	120	Surfacing Equipment_2035_120	1,954	0,226	3,482	1,659	0,006	0,038	0,038	568,299	0,02	0,008965517
Surfacing Equipment	2035	121	175	Surfacing Equipment_2035_175	1,887	0,162	3,072	0,567	0,006	0,025	0,025	568,299	0,014	0,006275862
Surfacing Equipment	2035	176	250	Surfacing Equipment_2035_250	2,725	0,149	1,05	0,497	0,006	0,016	0,016	568,299	0,013	0,005827586
Surfacing Equipment	2035	251	500	Surfacing Equipment_2035_500	4,436	0,148	1,018	0,471	0,005	0,016	0,016	568,299	0,013	0,005827586
Surfacing Equipment	2035	501	750	Surfacing Equipment_2035_750	6,967	0,148	1,018	0,477	0,005	0,016	0,016	568,3	0,013	0,005827586
Surfacing Equipment	2040	26	50	Surfacing Equipment_2040_50	0,753	0,395	4,183	3,114	0,007	0,025	0,025	568,299	0,035	0,015689655
Surfacing Equipment	2040	51	120	Surfacing Equipment_2040_120	1,782	0,206	3,477	1,521	0,006	0,024	0,024	568,299	0,018	0,008068966
Surfacing Equipment	2040	121	175	Surfacing Equipment_2040_175	1,691	0,146	3,073	0,397	0,006	0,017	0,017	568,299	0,013	0,005827586
Surfacing Equipment	2040	176	250	Surfacing Equipment_2040_250	2,566	0,14	1,047	0,37	0,006	0,013	0,013	568,299	0,012	0,00537931
Surfacing Equipment	2040	251	500	Surfacing Equipment_2040_500	4,197	0,14	1,015	0,358	0,005	0,012	0,012	568,299	0,012	0,00537931
Surfacing Equipment	2040	501	750	Surfacing Equipment_2040_750	6,59	0,14	1,015	0,361	0,005	0,013	0,013	568,299	0,012	0,00537931
Sweepers/Scrubbers	1990	6	15	Sweepers/Scrubbers_1990_15	4,971	1,804	5	9,999	0,833	0,968	0,968	568,299	0,162	0,07262069
Sweepers/Scrubbers	1990	16	25	Sweepers/Scrubbers_1990_25	10,019	2,213	5	6,92	0,679	0,735	0,735	568,299	0,199	0,089206897
Sweepers/Scrubbers	1990	26	50	Sweepers/Scrubbers_1990_50	32,867	4,512	9,199	7,836	0,692	1,202	1,202	568,299	0,407	0,182448276
Sweepers/Scrubbers	1990	51	120	Sweepers/Scrubbers_1990_120	39,044	2,254	5,53	14,467	0,628	1,259	1,259	568,299	0,203	0,091
Sweepers/Scrubbers	1990	121	175	Sweepers/Scrubbers_1990_175	48,318	1,505	4,861	12,813	0,602	0,818	0,818	568,299	0,135	0,060517241
Sweepers/Scrubbers	1990	176	250	Sweepers/Scrubbers_1990_250	56,322	1,505	4,861	12,813	0,602	0,818	0,818	568,299	0,135	0,060517241

Sweepers/Scrubbers	2000	6	15	Sweepers/Scrubbers_2000_15	2,886	1,047	4,258	7,362	0,079	0,428	0,428	568,299	0,094	0,042137931
Sweepers/Scrubbers	2000	16	25	Sweepers/Scrubbers_2000_25	4,933	1,089	4,438	6,325	0,064	0,442	0,442	568,299	0,098	0,043931034
Sweepers/Scrubbers	2000	26	50	Sweepers/Scrubbers_2000_50	30,182	4,144	8,622	6,934	0,065	0,882	0,882	568,299	0,373	0,167206897
Sweepers/Scrubbers	2000	51	120	Sweepers/Scrubbers_2000_120	29,565	1,706	4,394	9,702	0,059	0,84	0,84	568,299	0,154	0,069034483
Sweepers/Scrubbers	2000	121	175	Sweepers/Scrubbers_2000_175	37,084	1,155	3,49	8,929	0,057	0,481	0,481	568,299	0,104	0,04662069
Sweepers/Scrubbers	2000	176	250	Sweepers/Scrubbers_2000_250	34,578	0,924	2,598	8,516	0,057	0,371	0,371	568,3	0,083	0,037206897
Sweepers/Scrubbers	2005	6	15	Sweepers/Scrubbers_2005_15	1,951	0,708	3,469	4,985	0,079	0,35	0,35	568,299	0,063	0,028241379
Sweepers/Scrubbers	2005	16	25	Sweepers/Scrubbers_2005_25	3,505	0,774	2,526	5,326	0,064	0,323	0,323	568,299	0,069	0,030931034
Sweepers/Scrubbers	2005	26	50	Sweepers/Scrubbers_2005_50	28,008	3,845	8,25	6,52	0,065	0,844	0,844	568,299	0,346	0,155103448
Sweepers/Scrubbers	2005	51	120	Sweepers/Scrubbers_2005_120	27,009	1,559	4,253	8,538	0,059	0,826	0,826	568,299	0,14	0,062758621
Sweepers/Scrubbers	2005	121	175	Sweepers/Scrubbers_2005_175	32,779	1,021	3,349	7,851	0,057	0,45	0,45	568,3	0,092	0,041241379
Sweepers/Scrubbers	2005	176	250	Sweepers/Scrubbers_2005_250	25,002	0,668	1,76	7,318	0,057	0,258	0,258	568,299	0,06	0,026896552
Sweepers/Scrubbers	2010	6	15	Sweepers/Scrubbers_2010_15	2,154395	1,81	6,34286	5,8263	0,005	0,615	0,566	583,6982	0,17	0,076206897
Sweepers/Scrubbers	2010	16	25	Sweepers/Scrubbers_2010_25	2,154395	1,81	6,34286	5,8263	0,005	0,615	0,566	583,6982	0,17	0,076206897
Sweepers/Scrubbers	2010	26	50	Sweepers/Scrubbers_2010_50	2,154395	1,81	6,34286	5,8263	0,005	0,615	0,566	583,6982	0,17	0,076206897
Sweepers/Scrubbers	2010	51	120	Sweepers/Scrubbers_2010_120	1,093749	0,919	4,10149	7,68967	0,005	0,657	0,604	526,7953	0,153	0,068586207
Sweepers/Scrubbers	2010	121	175	Sweepers/Scrubbers_2010_175	1,189152	0,999	4,21032	10,3895	0,005	0,578	0,532	525,6912	0,153	0,068586207
Sweepers/Scrubbers	2010	176	250	Sweepers/Scrubbers_2010_250	0,69332	0,583	2,35018	7,47446	0,005	0,319	0,294	522,3625	0,152	0,068137931
Sweepers/Scrubbers	2011	6	15	Sweepers/Scrubbers_2011_15	2,104606	1,768	6,34227	5,80317	0,005	0,606	0,557	582,239	0,17	0,076206897
Sweepers/Scrubbers	2011	16	25	Sweepers/Scrubbers_2011_25	2,104606	1,768	6,34227	5,80317	0,005	0,606	0,557	582,239	0,17	0,076206897
Sweepers/Scrubbers	2011	26	50	Sweepers/Scrubbers_2011_50	2,104606	1,768	6,34227	5,80317	0,005	0,606	0,557	582,239	0,17	0,076206897
Sweepers/Scrubbers	2011	51	120	Sweepers/Scrubbers_2011_120	1,070043	0,899	4,08877	7,49949	0,005	0,651	0,599	525,4783	0,153	0,068586207
Sweepers/Scrubbers	2011	121	175	Sweepers/Scrubbers_2011_175	1,134336	0,953	4,14616	9,92737	0,005	0,554	0,509	524,377	0,153	0,068586207
Sweepers/Scrubbers	2011	176	250	Sweepers/Scrubbers_2011_250	0,623199	0,524	2,16425	7,01091	0,005	0,284	0,261	521,0566	0,152	0,068137931
Sweepers/Scrubbers	2012	6	15	Sweepers/Scrubbers_2012_15	2,177617	1,83	6,54958	5,85015	0,005	0,621	0,571	580,7797	0,17	0,076206897
Sweepers/Scrubbers	2012	16	25	Sweepers/Scrubbers_2012_25	2,177617	1,83	6,54958	5,85015	0,005	0,621	0,571	580,7797	0,17	0,076206897
Sweepers/Scrubbers	2012	26	50	Sweepers/Scrubbers_2012_50	2,177617	1,83	6,54958	5,85015	0,005	0,621	0,571	580,7797	0,17	0,076206897
Sweepers/Scrubbers	2012	51	120	Sweepers/Scrubbers_2012_120	1,078889	0,907	4,12474	7,50259	0,005	0,659	0,606	524,1613	0,153	0,068586207
Sweepers/Scrubbers	2012	121	175	Sweepers/Scrubbers_2012_175	1,141423	0,959	4,16243	9,95689	0,005	0,558	0,513	523,0627	0,153	0,068586207
Sweepers/Scrubbers	2012	176	250	Sweepers/Scrubbers_2012_250	0,63315	0,532	2,17716	7,05573	0,005	0,286	0,264	519,7507	0,152	0,068137931
Sweepers/Scrubbers	2013	6	15	Sweepers/Scrubbers_2013_15	2,124198	1,785	6,54294	5,78778	0,005	0,608	0,559	577,8612	0,17	0,076206897
Sweepers/Scrubbers	2013	16	25	Sweepers/Scrubbers_2013_25	2,124198	1,785	6,54294	5,78778	0,005	0,608	0,559	577,8612	0,17	0,076206897
Sweepers/Scrubbers	2013	26	50	Sweepers/Scrubbers_2013_50	2,124198	1,785	6,54294	5,78778	0,005	0,608	0,559	577,8612	0,17	0,076206897
Sweepers/Scrubbers	2013	51	120	Sweepers/Scrubbers_2013_120	1,019559	0,857	4,07918	7,14773	0,005	0,626	0,576	521,5273	0,153	0,068586207
Sweepers/Scrubbers	2013	121	175	Sweepers/Scrubbers_2013_175	1,122038	0,943	4,12302	9,76352	0,005	0,547	0,503	520,4343	0,153	0,068586207
Sweepers/Scrubbers	2013	176	250	Sweepers/Scrubbers_2013_250	0,590836	0,496	2,05413	6,66337	0,005	0,263	0,242	517,1389	0,152	0,068137931
Sweepers/Scrubbers	2014	6	15	Sweepers/Scrubbers_2014_15	2,103399	1,767	6,59249	5,75157	0,005	0,603	0,555	574,9427	0,17	0,076206897
Sweepers/Scrubbers	2014	16	25	Sweepers/Scrubbers_2014_25	2,103399	1,767	6,59249	5,75157	0,005	0,603	0,555	574,9427	0,17	0,076206897
Sweepers/Scrubbers	2014	26	50	Sweepers/Scrubbers_2014_50	2,103399	1,767	6,59249	5,75157	0,005	0,603	0,555	574,9427	0,17	0,076206897
Sweepers/Scrubbers	2014	51	120	Sweepers/Scrubbers_2014_120	0,990916	0,833	4,07085	6,93387	0,005	0,61	0,562	518,8933	0,153	0,068586207
Sweepers/Scrubbers	2014	121	175	Sweepers/Scrubbers_2014_175	1,041854	0,875	4,04161	9,10792	0,005	0,503	0,463	517,8058	0,153	0,068586207
Sweepers/Scrubbers	2014	176	250	Sweepers/Scrubbers_2014_250	0,600544	0,505	2,06593	6,70399	0,005	0,265	0,244	514,5271	0,152	0,068137931
Sweepers/Scrubbers	2015	6	15	Sweepers/Scrubbers_2015_15	2,151059	1,807	6,75408	5,77191	0,005	0,611	0,562	569,1058	0,17	0,076206897
Sweepers/Scrubbers	2015	16	25	Sweepers/Scrubbers_2015_25	2,151059	1,807	6,75408	5,77191	0,005	0,611	0,562	569,1058	0,17	0,076206897
Sweepers/Scrubbers	2015	26	50	Sweepers/Scrubbers_2015_50	2,151059	1,807	6,75408	5,77191	0,005	0,611	0,562	569,1058	0,17	0,076206897
Sweepers/Scrubbers	2015	51	120	Sweepers/Scrubbers_2015_120	0,991855	0,833	4,09682	6,8863	0,005	0,61	0,561	513,6254	0,153	0,068586207
Sweepers/Scrubbers	2015	121	175	Sweepers/Scrubbers_2015_175	0,998266	0,839	3,98239	8,69682	0,005	0,479	0,441	512,5489	0,153	0,068586207
Sweepers/Scrubbers	2015	176	250	Sweepers/Scrubbers_2015_250	0,610252	0,513	2,07774	6,7446	0,005	0,268	0,246	509,3035	0,152	0,068137931
Sweepers/Scrubbers	2016	6	15	Sweepers/Scrubbers_2016_15	2,119969	1,781	6,78514	5,72609	0,005	0,603	0,555	563,2688	0,17	0,076206897
Sweepers/Scrubbers	2016	16	25	Sweepers/Scrubbers_2016_25	2,119969	1,781	6,78514	5,72609	0,005	0,603	0,555	563,2688	0,17	0,076206897
Sweepers/Scrubbers	2016	26	50	Sweepers/Scrubbers_2016_50	2,119969	1,781	6,78514	5,72609	0,005	0,603	0,555	563,2688	0,17	0,076206897
Sweepers/Scrubbers	2016	51	120	Sweepers/Scrubbers_2016_120	0,931404	0,783	4,05916	6,45405	0,005	0,571	0,525	508,3574	0,153	0,068586207
Sweepers/Scrubbers	2016	121	175	Sweepers/Scrubbers_2016_175	0,887319	0,746	3,83865	7,78746	0,005	0,419	0,385	507,292	0,153	0,068586207
Sweepers/Scrubbers	2016	176	250	Sweepers/Scrubbers_2016_250	0,61965	0,521	2,08905	6,78244	0,005	0,27	0,248	504,0799	0,152	0,068137931
Sweepers/Scrubbers	2017	6	15	Sweepers/Scrubbers_2017_15	2,037349	1,712	6,7185	5,62558	0,005	0,582	0,535	554,5133	0,17	0,076206897
Sweepers/Scrubbers	2017	16	25	Sweepers/Scrubbers_2017_25	2,037349	1,712	6,7185	5,62558	0,005	0,582	0,535	554,5133	0,17	0,076206897
Sweepers/Scrubbers	2017	26	50	Sweepers/Scrubbers_2017_50	2,037349	1,712	6,7185	5,62558	0,005	0,582	0,535	554,5133	0,17	0,076206897
Sweepers/Scrubbers	2017	51	120	Sweepers/Scrubbers_2017_120	0,857444	0,72	4,01005	6,0202	0,005	0,52	0,479	500,4555	0,153	0,068586207
Sweepers/Scrubbers	2017	121	175	Sweepers/Scrubbers_2017_175	0,845582	0,711	3,78429	7,42433	0,005	0,395	0,363	499,4066	0,153	0,068586207
Sweepers/Scrubbers	2017	176	250	Sweepers/Scrubbers_2017_250	0,610026	0,513	2,08973	6,50894	0,005	0,264	0,243	496,2444	0,152	0,068137931
Sweepers/Scrubbers	2018	6	15	Sweepers/Scrubbers_2018_15	1,838607	1,545	6,4442	5,39866	0,005	0,531	0,488	545,7578	0,17	0,076206897
Sweepers/Scrubbers	2018	16	25	Sweepers/Scrubbers_2018_25	1,838607	1,545	6,4442	5,39866	0,005	0,531	0,488	545,7578	0,17	0,076206897
Sweepers/Scrubbers	2018	26	50	Sweepers/Scrubbers_2018_50	1,838607	1,545	6,4442	5,39866	0,005	0,531	0,488	545,7578	0,17	0,076206897
Sweepers/Scrubbers	2018	51	120	Sweepers/Scrubbers_2018_120	0,713411	0,599	3,88173	5,13595	0,005	0,428	0,394	492,5536	0,153	0,068586207
Sweepers/Scrubbers	2018	121	175	Sweepers/Scrubbers_2018_175	0,700892	0,589	3,58832	6,07101	0,005	0,32	0,294	491,5213	0,153	0,068586207
Sweepers/Scrubbers	2018	176	250	Sweepers/Scrubbers_2018_250	0,415916	0,349	1,60478	4,30158	0,005	0,169	0,156	488,409	0,152	0,068137931
Sweepers/Scrubbers	2019	6	15	Sweepers/Scrubbers_2019_15	1,703052	1,431	6,26782	5,22487	0,005	0,491	0,452	537,0023	0,17	0,076206897
Sweepers/Scrubbers	2019	16	25	Sweepers/Scrubbers_2019_25	1,703052	1,431	6,26782	5,22487	0,005	0,491	0,452	537,0023	0,17	0,076206897
Sweepers/Scrubbers	2019	26	50	Sweepers/Scrubbers_2019_50	1,703052	1,431	6,26782	5,22487	0,005	0,491	0,452	537,0023	0,17	0,076206897
Sweepers/Scrubbers	2019	51	120	Sweepers/Scrubbers_2019_120	0,654062	0,55	3,84602	4,77259	0,005	0,387	0,356	484,6516	0,153	0,068586207
Sweepers/Scrubbers	2019	121	175	Sweepers/Scrubbers_2019_175	0,62277	0,523	3,4491	5,30082	0,005	0,277	0,255	483,6359	0,153	0,068586207
Sweepers/Scrubbers	2019	176	250	Sweepers/Scrubbers_2019_250	0,279258	0,235	1,23013	2,86598	0,005	0,099	0,091	480,5735	0,152	0,068137931
Sweepers/Scrubbers	2020	6	15	Sweepers/Scrubbers_2020_15	1,599203	1,344	6,1554	5,09515	0,005	0,463	0,426	525,3284	0,17	0,076206897

Sweepers/Scrubbers	2020	16	25	Sweepers/Scrubbers_2020_25	1,599203	1,344	6,1554	5,09515	0,005	0,463	0,426	525,3284	0,17	0,076206897
Sweepers/Scrubbers	2020	26	50	Sweepers/Scrubbers_2020_50	1,599203	1,344	6,1554	5,09515	0,005	0,463	0,426	525,3284	0,17	0,076206897
Sweepers/Scrubbers	2020	51	120	Sweepers/Scrubbers_2020_120	0,618762	0,52	3,82752	4,4821	0,005	0,36	0,331	474,1157	0,153	0,068586207
Sweepers/Scrubbers	2020	121	175	Sweepers/Scrubbers_2020_175	0,549287	0,462	3,35909	4,60809	0,005	0,237	0,218	473,1221	0,153	0,068586207
Sweepers/Scrubbers	2020	176	250	Sweepers/Scrubbers_2020_250	0,246498	0,207	1,13655	2,4856	0,005	0,079	0,073	470,1263	0,152	0,068137931
Sweepers/Scrubbers	2021	6	15	Sweepers/Scrubbers_2021_15	1,450842	1,219	5,89996	4,84946	0,005	0,412	0,379	525,3284	0,17	0,076206897
Sweepers/Scrubbers	2021	16	25	Sweepers/Scrubbers_2021_25	1,450842	1,219	5,89996	4,84946	0,005	0,412	0,379	525,3284	0,17	0,076206897
Sweepers/Scrubbers	2021	26	50	Sweepers/Scrubbers_2021_50	1,450842	1,219	5,89996	4,84946	0,005	0,412	0,379	525,3284	0,17	0,076206897
Sweepers/Scrubbers	2021	51	120	Sweepers/Scrubbers_2021_120	0,523878	0,44	3,75746	3,96194	0,005	0,291	0,268	474,1157	0,153	0,068586207
Sweepers/Scrubbers	2021	121	175	Sweepers/Scrubbers_2021_175	0,457963	0,385	3,24726	3,70723	0,005	0,187	0,172	473,1221	0,153	0,068586207
Sweepers/Scrubbers	2021	176	250	Sweepers/Scrubbers_2021_250	0,195441	0,164	1,1084	1,75821	0,005	0,055	0,051	470,1263	0,152	0,068137931
Sweepers/Scrubbers	2022	6	15	Sweepers/Scrubbers_2022_15	1,199805	1,008	5,45118	4,49049	0,005	0,335	0,308	525,3284	0,17	0,076206897
Sweepers/Scrubbers	2022	16	25	Sweepers/Scrubbers_2022_25	1,199805	1,008	5,45118	4,49049	0,005	0,335	0,308	525,3284	0,17	0,076206897
Sweepers/Scrubbers	2022	26	50	Sweepers/Scrubbers_2022_50	1,199805	1,008	5,45118	4,49049	0,005	0,335	0,308	525,3284	0,17	0,076206897
Sweepers/Scrubbers	2022	51	120	Sweepers/Scrubbers_2022_120	0,443216	0,372	3,69196	3,47218	0,005	0,232	0,214	474,1157	0,153	0,068586207
Sweepers/Scrubbers	2022	121	175	Sweepers/Scrubbers_2022_175	0,382446	0,321	3,22176	3,00243	0,005	0,145	0,133	473,1221	0,153	0,068586207
Sweepers/Scrubbers	2022	176	250	Sweepers/Scrubbers_2022_250	0,181362	0,152	1,10147	1,60484	0,005	0,05	0,046	470,1263	0,152	0,068137931
Sweepers/Scrubbers	2023	6	15	Sweepers/Scrubbers_2023_15	0,903476	0,759	4,97095	4,12735	0,005	0,248	0,229	525,3284	0,17	0,076206897
Sweepers/Scrubbers	2023	16	25	Sweepers/Scrubbers_2023_25	0,903476	0,759	4,97095	4,12735	0,005	0,248	0,229	525,3284	0,17	0,076206897
Sweepers/Scrubbers	2023	26	50	Sweepers/Scrubbers_2023_50	0,903476	0,759	4,97095	4,12735	0,005	0,248	0,229	525,3284	0,17	0,076206897
Sweepers/Scrubbers	2023	51	120	Sweepers/Scrubbers_2023_120	0,417244	0,351	3,69499	3,28536	0,005	0,21	0,193	474,1157	0,153	0,068586207
Sweepers/Scrubbers	2023	121	175	Sweepers/Scrubbers_2023_175	0,347747	0,292	3,22298	2,60853	0,005	0,126	0,116	473,1221	0,153	0,068586207
Sweepers/Scrubbers	2023	176	250	Sweepers/Scrubbers_2023_250	0,188622	0,158	1,11413	1,61028	0,005	0,05	0,046	470,1263	0,152	0,068137931
Sweepers/Scrubbers	2024	6	15	Sweepers/Scrubbers_2024_15	0,887865	0,746	5,00321	4,0788	0,005	0,239	0,219	525,3284	0,17	0,076206897
Sweepers/Scrubbers	2024	16	25	Sweepers/Scrubbers_2024_25	0,887865	0,746	5,00321	4,0788	0,005	0,239	0,219	525,3284	0,17	0,076206897
Sweepers/Scrubbers	2024	26	50	Sweepers/Scrubbers_2024_50	0,887865	0,746	5,00321	4,0788	0,005	0,239	0,219	525,3284	0,17	0,076206897
Sweepers/Scrubbers	2024	51	120	Sweepers/Scrubbers_2024_120	0,395131	0,332	3,69288	3,09846	0,005	0,188	0,173	474,1157	0,153	0,068586207
Sweepers/Scrubbers	2024	121	175	Sweepers/Scrubbers_2024_175	0,316819	0,266	3,23374	2,2533	0,005	0,107	0,099	473,1221	0,153	0,068586207
Sweepers/Scrubbers	2024	176	250	Sweepers/Scrubbers_2024_250	0,195631	0,164	1,12729	1,61357	0,005	0,051	0,046	470,1263	0,152	0,068137931
Sweepers/Scrubbers	2025	6	15	Sweepers/Scrubbers_2025_15	0,740656	0,622	4,76791	3,85568	0,005	0,191	0,176	525,3284	0,17	0,076206897
Sweepers/Scrubbers	2025	16	25	Sweepers/Scrubbers_2025_25	0,740656	0,622	4,76791	3,85568	0,005	0,191	0,176	525,3284	0,17	0,076206897
Sweepers/Scrubbers	2025	26	50	Sweepers/Scrubbers_2025_50	0,740656	0,622	4,76791	3,85568	0,005	0,191	0,176	525,3284	0,17	0,076206897
Sweepers/Scrubbers	2025	51	120	Sweepers/Scrubbers_2025_120	0,360743	0,303	3,66402	2,81733	0,005	0,16	0,147	474,1157	0,153	0,068586207
Sweepers/Scrubbers	2025	121	175	Sweepers/Scrubbers_2025_175	0,25385	0,213	3,201	1,63811	0,005	0,072	0,066	473,1221	0,153	0,068586207
Sweepers/Scrubbers	2025	176	250	Sweepers/Scrubbers_2025_250	0,202235	0,17	1,14005	1,61588	0,005	0,051	0,047	470,1263	0,152	0,068137931
Sweepers/Scrubbers	2030	6	15	Sweepers/Scrubbers_2030_15	1,624	0,589	3,47	4,142	0,008	0,161	0,161	568,299	0,053	0,023758621
Sweepers/Scrubbers	2030	16	25	Sweepers/Scrubbers_2030_25	3,103	0,685	2,34	4,332	0,007	0,161	0,161	568,299	0,061	0,027344828
Sweepers/Scrubbers	2030	26	50	Sweepers/Scrubbers_2030_50	3,714	0,509	4,947	3,294	0,007	0,026	0,026	568,299	0,046	0,02062069
Sweepers/Scrubbers	2030	51	120	Sweepers/Scrubbers_2030_120	4,528	0,261	3,703	1,569	0,006	0,023	0,023	568,299	0,023	0,010310345
Sweepers/Scrubbers	2030	121	175	Sweepers/Scrubbers_2030_175	6,02	0,187	3,275	0,431	0,006	0,017	0,017	568,299	0,016	0,007172414
Sweepers/Scrubbers	2030	176	250	Sweepers/Scrubbers_2030_250	6,813	0,182	1,116	0,37	0,006	0,013	0,013	568,299	0,016	0,007172414
Sweepers/Scrubbers	2035	6	15	Sweepers/Scrubbers_2035_15	1,624	0,589	3,47	4,142	0,008	0,161	0,161	568,299	0,053	0,023758621
Sweepers/Scrubbers	2035	16	25	Sweepers/Scrubbers_2035_25	3,103	0,685	2,34	4,332	0,007	0,161	0,161	568,3	0,061	0,027344828
Sweepers/Scrubbers	2035	26	50	Sweepers/Scrubbers_2035_50	3,681	0,505	4,929	3,214	0,007	0,017	0,017	568,299	0,045	0,020172414
Sweepers/Scrubbers	2035	51	120	Sweepers/Scrubbers_2035_120	4,386	0,253	3,698	1,486	0,006	0,016	0,016	568,299	0,022	0,009862069
Sweepers/Scrubbers	2035	121	175	Sweepers/Scrubbers_2035_175	5,628	0,175	3,271	0,313	0,006	0,012	0,012	568,299	0,015	0,006724138
Sweepers/Scrubbers	2035	176	250	Sweepers/Scrubbers_2035_250	6,501	0,173	1,114	0,294	0,006	0,011	0,011	568,299	0,015	0,006724138
Sweepers/Scrubbers	2040	6	15	Sweepers/Scrubbers_2040_15	1,624	0,589	3,47	4,142	0,008	0,161	0,161	568,3	0,053	0,023758621
Sweepers/Scrubbers	2040	16	25	Sweepers/Scrubbers_2040_25	3,103	0,685	2,34	4,332	0,007	0,161	0,161	568,299	0,061	0,027344828
Sweepers/Scrubbers	2040	26	50	Sweepers/Scrubbers_2040_50	3,675	0,504	4,925	3,203	0,007	0,016	0,016	568,3	0,045	0,020172414
Sweepers/Scrubbers	2040	51	120	Sweepers/Scrubbers_2040_120	4,354	0,251	3,697	1,469	0,006	0,015	0,015	568,299	0,022	0,009862069
Sweepers/Scrubbers	2040	121	175	Sweepers/Scrubbers_2040_175	5,537	0,172	3,27	0,284	0,006	0,011	0,011	568,299	0,015	0,006724138
Sweepers/Scrubbers	2040	176	250	Sweepers/Scrubbers_2040_250	6,454	0,172	1,114	0,284	0,006	0,011	0,011	568,299	0,015	0,006724138
Tractors/Loaders/Backhoes	1990	16	25	Tractors/Loaders/Backhoes_1990_25	5,699	2,213	4,999	6,919	0,855	0,741	0,741	568,299	0,199	0,089206897
Tractors/Loaders/Backhoes	1990	26	50	Tractors/Loaders/Backhoes_1990_50	23,587	4,787	9,698	7,939	0,871	1,267	1,267	568,299	0,431	0,193206897
Tractors/Loaders/Backhoes	1990	51	120	Tractors/Loaders/Backhoes_1990_120	19,595	2,333	5,659	14,779	0,791	1,327	1,327	568,299	0,21	0,094137931
Tractors/Loaders/Backhoes	1990	121	175	Tractors/Loaders/Backhoes_1990_175	28,833	1,751	5,008	14,021	0,758	0,974	0,974	568,299	0,158	0,070827586
Tractors/Loaders/Backhoes	1990	176	250	Tractors/Loaders/Backhoes_1990_250	48,841	1,751	5,008	14,021	0,758	0,974	0,974	568,299	0,158	0,070827586
Tractors/Loaders/Backhoes	1990	251	500	Tractors/Loaders/Backhoes_1990_500	86,854	1,551	10,967	13,298	0,758	0,834	0,834	568,3	0,139	0,062310345
Tractors/Loaders/Backhoes	1990	501	750	Tractors/Loaders/Backhoes_1990_750	130,281	1,551	10,967	13,298	1,139	0,85	0,85	568,299	0,139	0,062310345
Tractors/Loaders/Backhoes	2000	16	25	Tractors/Loaders/Backhoes_2000_25	5,225	2,029	4,66	6,391	0,065	0,57	0,57	568,299	0,183	0,082034483
Tractors/Loaders/Backhoes	2000	26	50	Tractors/Loaders/Backhoes_2000_50	21,043	4,271	8,855	6,964	0,066	0,903	0,903	568,299	0,385	0,172586207
Tractors/Loaders/Backhoes	2000	51	120	Tractors/Loaders/Backhoes_2000_120	14,597	1,738	4,448	9,784	0,06	0,862	0,862	568,299	0,156	0,069931034
Tractors/Loaders/Backhoes	2000	121	175	Tractors/Loaders/Backhoes_2000_175	19,393	1,178	3,534	9,027	0,057	0,494	0,494	568,299	0,106	0,047517241
Tractors/Loaders/Backhoes	2000	176	250	Tractors/Loaders/Backhoes_2000_250	26,283	0,942	2,634	8,625	0,057	0,38	0,38	568,299	0,085	0,038103448
Tractors/Loaders/Backhoes	2000	251	500	Tractors/Loaders/Backhoes_2000_500	48,341	0,863	3,629	8,225	0,057	0,339	0,339	568,299	0,077	0,034517241
Tractors/Loaders/Backhoes	2000	501	750	Tractors/Loaders/Backhoes_2000_750	72,512	0,863	3,629	8,225	0,059	0,339	0,339	568,299	0,077	0,034517241
Tractors/Loaders/Backhoes	2005	16	25	Tractors/Loaders/Backhoes_2005_25	3,067	1,191	3,137	5,648	0,065	0,404	0,404	568,299	0,107	0,047965517
Tractors/Loaders/Backhoes	2005	26	50	Tractors/Loaders/Backhoes_2005_50	18,069	3,667	8,018	6,405	0,066	0,819	0,819	568,299	0,33	0,147931034
Tractors/Loaders/Backhoes	2005	51	120	Tractors/Loaders/Backhoes_2005_120	12,595	1,499	4,22	8,325	0,06	0,802	0,802	568,299	0,135	0,060517241
Tractors/Loaders/Backhoes	2005	121	175	Tractors/Loaders/Backhoes_2005_175	16,035	0,974	3,341	7,629	0,057	0,432	0,432	568,3	0,087	0,039
Tractors/Loaders/Backhoes	2005	176	250	Tractors/Loaders/Backhoes_2005_250	18,392	0,659	1,774	7,181	0,057	0,256	0,256	568,3	0,059	0,026448276
Tractors/Loaders/Backhoes	2005	251	500	Tractors/Loaders/Backhoes_2005_500	32,511	0,58	1,993	6,451	0,057	0,23	0,23	568,299	0,052	0,023310345

Tractors/Loaders/Backhoes	2005	501	750	Tractors/Loaders/Backhoes_2005_750	49,91	0,594	1,99	6,656	0,059	0,234	0,234	568,299	0,053	0,023758621
Tractors/Loaders/Backhoes	2010	16	25	Tractors/Loaders/Backhoes_2010_25	1,894649	1,592	5,95576	5,63221	0,005	0,561	0,516	569,9866	0,166	0,074413793
Tractors/Loaders/Backhoes	2010	26	50	Tractors/Loaders/Backhoes_2010_50	1,894649	1,592	5,95576	5,63221	0,005	0,561	0,516	569,9866	0,166	0,074413793
Tractors/Loaders/Backhoes	2010	51	120	Tractors/Loaders/Backhoes_2010_120	0,792369	0,666	3,83197	6,31224	0,005	0,504	0,464	533,5879	0,155	0,069482759
Tractors/Loaders/Backhoes	2010	121	175	Tractors/Loaders/Backhoes_2010_175	0,559066	0,47	3,20391	5,68573	0,005	0,285	0,263	521,9624	0,152	0,068137931
Tractors/Loaders/Backhoes	2010	176	250	Tractors/Loaders/Backhoes_2010_250	0,408454	0,343	1,44044	5,58586	0,005	0,178	0,163	522,8516	0,152	0,068137931
Tractors/Loaders/Backhoes	2010	251	500	Tractors/Loaders/Backhoes_2010_500	0,391383	0,329	2,07689	5,18517	0,005	0,172	0,158	526,5923	0,153	0,068586207
Tractors/Loaders/Backhoes	2010	501	750	Tractors/Loaders/Backhoes_2010_750	0,330642	0,278	1,80487	4,39795	0,005	0,153	0,141	517,4169	0,151	0,067689655
Tractors/Loaders/Backhoes	2011	16	25	Tractors/Loaders/Backhoes_2011_25	1,788969	1,503	5,86306	5,58613	0,005	0,54	0,497	569,4176	0,166	0,074413793
Tractors/Loaders/Backhoes	2011	26	50	Tractors/Loaders/Backhoes_2011_50	1,788969	1,503	5,86306	5,58613	0,005	0,54	0,497	569,4176	0,166	0,074413793
Tractors/Loaders/Backhoes	2011	51	120	Tractors/Loaders/Backhoes_2011_120	0,766159	0,644	3,83083	6,12981	0,005	0,491	0,451	531,2907	0,155	0,069482759
Tractors/Loaders/Backhoes	2011	121	175	Tractors/Loaders/Backhoes_2011_175	0,544391	0,457	3,21464	5,49667	0,005	0,277	0,255	520,8772	0,152	0,068137931
Tractors/Loaders/Backhoes	2011	176	250	Tractors/Loaders/Backhoes_2011_250	0,400263	0,336	1,41416	5,38873	0,005	0,172	0,158	521,7143	0,152	0,068137931
Tractors/Loaders/Backhoes	2011	251	500	Tractors/Loaders/Backhoes_2011_500	0,383321	0,322	2,01155	4,98779	0,005	0,167	0,154	525,0356	0,153	0,068586207
Tractors/Loaders/Backhoes	2011	501	750	Tractors/Loaders/Backhoes_2011_750	0,337174	0,283	1,80098	4,35896	0,005	0,153	0,14	516,0241	0,151	0,067689655
Tractors/Loaders/Backhoes	2012	16	25	Tractors/Loaders/Backhoes_2012_25	1,778006	1,494	5,92961	5,57167	0,005	0,537	0,494	568,1171	0,166	0,074413793
Tractors/Loaders/Backhoes	2012	26	50	Tractors/Loaders/Backhoes_2012_50	1,778006	1,494	5,92961	5,57167	0,005	0,537	0,494	568,1171	0,166	0,074413793
Tractors/Loaders/Backhoes	2012	51	120	Tractors/Loaders/Backhoes_2012_120	0,765477	0,643	3,85825	6,07938	0,005	0,49	0,45	529,8013	0,155	0,069482759
Tractors/Loaders/Backhoes	2012	121	175	Tractors/Loaders/Backhoes_2012_175	0,55208	0,464	3,24733	5,48812	0,005	0,279	0,257	519,5807	0,152	0,068137931
Tractors/Loaders/Backhoes	2012	176	250	Tractors/Loaders/Backhoes_2012_250	0,408595	0,343	1,42415	5,3794	0,005	0,173	0,159	520,5233	0,152	0,068137931
Tractors/Loaders/Backhoes	2012	251	500	Tractors/Loaders/Backhoes_2012_500	0,391545	0,329	2,03631	4,9585	0,005	0,168	0,154	523,6066	0,153	0,068586207
Tractors/Loaders/Backhoes	2012	501	750	Tractors/Loaders/Backhoes_2012_750	0,34578	0,291	1,81138	4,30593	0,005	0,153	0,141	514,6158	0,151	0,067689655
Tractors/Loaders/Backhoes	2013	16	25	Tractors/Loaders/Backhoes_2013_25	1,710175	1,437	5,8983	5,50692	0,005	0,52	0,478	566,4101	0,167	0,074862069
Tractors/Loaders/Backhoes	2013	26	50	Tractors/Loaders/Backhoes_2013_50	1,710175	1,437	5,8983	5,50692	0,005	0,52	0,478	566,4101	0,167	0,074862069
Tractors/Loaders/Backhoes	2013	51	120	Tractors/Loaders/Backhoes_2013_120	0,736849	0,619	3,85259	5,88177	0,005	0,468	0,431	526,7149	0,155	0,069482759
Tractors/Loaders/Backhoes	2013	121	175	Tractors/Loaders/Backhoes_2013_175	0,53894	0,453	3,25593	5,32658	0,005	0,269	0,248	516,748	0,152	0,068137931
Tractors/Loaders/Backhoes	2013	176	250	Tractors/Loaders/Backhoes_2013_250	0,404183	0,34	1,40715	5,22143	0,005	0,168	0,155	517,9916	0,152	0,068137931
Tractors/Loaders/Backhoes	2013	251	500	Tractors/Loaders/Backhoes_2013_500	0,386263	0,325	1,98237	4,77348	0,005	0,162	0,149	520,6472	0,153	0,068586207
Tractors/Loaders/Backhoes	2013	501	750	Tractors/Loaders/Backhoes_2013_750	0,357231	0,3	1,8218	4,31599	0,005	0,155	0,143	511,8955	0,151	0,067689655
Tractors/Loaders/Backhoes	2014	16	25	Tractors/Loaders/Backhoes_2014_25	1,58953	1,336	5,77182	5,36869	0,005	0,488	0,449	564,0421	0,167	0,074862069
Tractors/Loaders/Backhoes	2014	26	50	Tractors/Loaders/Backhoes_2014_50	1,58953	1,336	5,77182	5,36869	0,005	0,488	0,449	564,0421	0,167	0,074862069
Tractors/Loaders/Backhoes	2014	51	120	Tractors/Loaders/Backhoes_2014_120	0,692813	0,582	3,82724	5,58081	0,005	0,438	0,403	523,0168	0,155	0,069482759
Tractors/Loaders/Backhoes	2014	121	175	Tractors/Loaders/Backhoes_2014_175	0,503298	0,423	3,23863	4,93788	0,005	0,248	0,228	513,8903	0,152	0,068137931
Tractors/Loaders/Backhoes	2014	176	250	Tractors/Loaders/Backhoes_2014_250	0,389056	0,327	1,37555	4,92175	0,005	0,159	0,146	515,1747	0,152	0,068137931
Tractors/Loaders/Backhoes	2014	251	500	Tractors/Loaders/Backhoes_2014_500	0,371559	0,312	1,87787	4,48819	0,005	0,152	0,14	517,1237	0,153	0,068586207
Tractors/Loaders/Backhoes	2014	501	750	Tractors/Loaders/Backhoes_2014_750	0,362599	0,305	1,8331	4,24344	0,005	0,154	0,141	511,3367	0,151	0,067689655
Tractors/Loaders/Backhoes	2015	16	25	Tractors/Loaders/Backhoes_2015_25	1,555682	1,307	5,79091	5,32019	0,005	0,477	0,439	558,7085	0,167	0,074862069
Tractors/Loaders/Backhoes	2015	26	50	Tractors/Loaders/Backhoes_2015_50	1,555682	1,307	5,79091	5,32019	0,005	0,477	0,439	558,7085	0,167	0,074862069
Tractors/Loaders/Backhoes	2015	51	120	Tractors/Loaders/Backhoes_2015_120	0,677539	0,569	3,83198	5,4221	0,005	0,424	0,39	517,3652	0,154	0,069034483
Tractors/Loaders/Backhoes	2015	121	175	Tractors/Loaders/Backhoes_2015_175	0,501434	0,421	3,2559	4,83599	0,005	0,244	0,225	508,6819	0,152	0,068137931
Tractors/Loaders/Backhoes	2015	176	250	Tractors/Loaders/Backhoes_2015_250	0,387795	0,326	1,37366	4,7831	0,005	0,155	0,143	509,6269	0,152	0,068137931
Tractors/Loaders/Backhoes	2015	251	500	Tractors/Loaders/Backhoes_2015_500	0,371246	0,312	1,88403	4,34833	0,005	0,149	0,137	511,8685	0,153	0,068586207
Tractors/Loaders/Backhoes	2015	501	750	Tractors/Loaders/Backhoes_2015_750	0,36596	0,308	1,823	4,1848	0,005	0,152	0,14	506,1469	0,151	0,067689655
Tractors/Loaders/Backhoes	2016	16	25	Tractors/Loaders/Backhoes_2016_25	1,488115	1,25	5,74113	5,21373	0,005	0,455	0,418	553,3996	0,167	0,074862069
Tractors/Loaders/Backhoes	2016	26	50	Tractors/Loaders/Backhoes_2016_50	1,488115	1,25	5,74113	5,21373	0,005	0,455	0,418	553,3996	0,167	0,074862069
Tractors/Loaders/Backhoes	2016	51	120	Tractors/Loaders/Backhoes_2016_120	0,640315	0,538	3,81146	5,14235	0,005	0,396	0,364	511,3456	0,154	0,069034483
Tractors/Loaders/Backhoes	2016	121	175	Tractors/Loaders/Backhoes_2016_175	0,46319	0,389	3,23229	4,37945	0,005	0,222	0,204	502,6294	0,152	0,068137931
Tractors/Loaders/Backhoes	2016	176	250	Tractors/Loaders/Backhoes_2016_250	0,369743	0,311	1,34719	4,42611	0,005	0,145	0,133	504,4014	0,152	0,068137931
Tractors/Loaders/Backhoes	2016	251	500	Tractors/Loaders/Backhoes_2016_500	0,337794	0,284	1,78642	3,7866	0,005	0,131	0,121	505,2698	0,152	0,068137931
Tractors/Loaders/Backhoes	2016	501	750	Tractors/Loaders/Backhoes_2016_750	0,357237	0,3	1,67424	4,0216	0,005	0,144	0,133	500,955	0,151	0,067689655
Tractors/Loaders/Backhoes	2017	16	25	Tractors/Loaders/Backhoes_2017_25	1,421071	1,194	5,68921	5,10958	0,005	0,433	0,398	544,9286	0,167	0,074862069
Tractors/Loaders/Backhoes	2017	26	50	Tractors/Loaders/Backhoes_2017_50	1,421071	1,194	5,68921	5,10958	0,005	0,433	0,398	544,9286	0,167	0,074862069
Tractors/Loaders/Backhoes	2017	51	120	Tractors/Loaders/Backhoes_2017_120	0,595595	0,5	3,7818	4,8087	0,005	0,362	0,333	502,7952	0,154	0,069034483
Tractors/Loaders/Backhoes	2017	121	175	Tractors/Loaders/Backhoes_2017_175	0,420865	0,354	3,19961	3,87876	0,005	0,197	0,181	493,912	0,151	0,067689655
Tractors/Loaders/Backhoes	2017	176	250	Tractors/Loaders/Backhoes_2017_250	0,346619	0,291	1,30369	4,04062	0,005	0,132	0,121	496,8449	0,152	0,068137931
Tractors/Loaders/Backhoes	2017	251	500	Tractors/Loaders/Backhoes_2017_500	0,323689	0,272	1,73851	3,48988	0,005	0,122	0,112	497,1129	0,152	0,068137931
Tractors/Loaders/Backhoes	2017	501	750	Tractors/Loaders/Backhoes_2017_750	0,35268	0,296	1,64567	3,86196	0,005	0,139	0,128	492,9529	0,151	0,067689655
Tractors/Loaders/Backhoes	2018	16	25	Tractors/Loaders/Backhoes_2018_25	1,180685	0,992	5,31043	4,76441	0,005	0,363	0,334	536,1115	0,167	0,074862069
Tractors/Loaders/Backhoes	2018	26	50	Tractors/Loaders/Backhoes_2018_50	1,180685	0,992	5,31043	4,76441	0,005	0,363	0,334	536,1115	0,167	0,074862069
Tractors/Loaders/Backhoes	2018	51	120	Tractors/Loaders/Backhoes_2018_120	0,5003	0,42	3,69155	4,15444	0,005	0,294	0,271	494,1237	0,154	0,069034483
Tractors/Loaders/Backhoes	2018	121	175	Tractors/Loaders/Backhoes_2018_175	0,353485	0,297	3,13727	3,16806	0,005	0,16	0,147	485,7754	0,151	0,067689655
Tractors/Loaders/Backhoes	2018	176	250	Tractors/Loaders/Backhoes_2018_250	0,308076	0,259	1,24197	3,45965	0,005	0,112	0,103	489,4562	0,152	0,068137931
Tractors/Loaders/Backhoes	2018	251	500	Tractors/Loaders/Backhoes_2018_500	0,264454	0,222	1,44545	2,66877	0,005	0,092	0,085	486,2939	0,151	0,067689655
Tractors/Loaders/Backhoes	2018	501	750	Tractors/Loaders/Backhoes_2018_750	0,322751	0,271	1,60068	3,40235	0,005	0,124	0,114	485,0099	0,151	0,067689655
Tractors/Loaders/Backhoes	2019	16	25	Tractors/Loaders/Backhoes_2019_25	1,095082	0,92	5,20327	4,60928	0,005	0,33	0,304	527,6843	0,167	0,074862069
Tractors/Loaders/Backhoes	2019	26	50	Tractors/Loaders/Backhoes_2019_50	1,095082	0,92	5,20327	4,60928	0,005	0,33	0,304	527,6843	0,167	0,074862069
Tractors/Loaders/Backhoes	2019	51	120	Tractors/Loaders/Backhoes_2019_120	0,437701	0,368	3,63777	3,69257	0,005	0,247	0,227	485,8548	0,154	0,069034483
Tractors/Loaders/Backhoes	2019	121	175	Tractors/Loaders/Backhoes_2019_175	0,321856	0,27	3,12158	2,78412	0,005	0,14	0,129	477,9151	0,151	0,067689655
Tractors/Loaders/Backhoes	2019	176	250	Tractors/Loaders/Backhoes_2019_250	0,291458	0,245	1,22027	3,14683	0,005	0,102	0,094	481,4206	0,152	0,068137931
Tractors/Loaders/Backhoes	2019	251	500	Tractors/Loaders/Backhoes_2019_500	0,245176	0,206	1,38918	2,34458	0,005	0,082	0,075	479,0826	0,152	0,068137931
Tractors/Loaders/Backhoes	2019	501	750	Tractors/Loaders/Backhoes_2019_750	0,311873	0,262	1,6025	3,12046	0,005	0,117	0,107	478,9216	0,152	0,068137931
Tractors/Loaders/Backhoes	2020	16	25	Tractors/Loaders/Backhoes_2020_25	0,987255	0,83	5,03491	4,39784	0,005	0,288	0,265	515,874	0,167	0,074862069
Tractors/Loaders/Backhoes	2020	26	50	Tractors/Loaders/Backhoes_2020_50	0,987255	0,83	5,03491	4,39784	0,005	0,288	0,265	515,874	0,167	0,074862069

Tractors/Loaders/Backhoes	2020	51	120	Tractors/Loaders/Backhoes_2020_120	0,393883	0,331	3,60147	3,32571	0,005	0,21	0,193	475,1543	0,154	0,069034483
Tractors/Loaders/Backhoes	2020	121	175	Tractors/Loaders/Backhoes_2020_175	0,29217	0,246	3,10518	2,41467	0,005	0,122	0,112	467,5132	0,151	0,067689655
Tractors/Loaders/Backhoes	2020	176	250	Tractors/Loaders/Backhoes_2020_250	0,268036	0,225	1,19592	2,73794	0,005	0,09	0,083	470,4998	0,152	0,068137931
Tractors/Loaders/Backhoes	2020	251	500	Tractors/Loaders/Backhoes_2020_500	0,230511	0,194	1,35815	2,07976	0,005	0,073	0,067	468,2447	0,151	0,067689655
Tractors/Loaders/Backhoes	2020	501	750	Tractors/Loaders/Backhoes_2020_750	0,318709	0,268	1,60984	3,11926	0,005	0,117	0,108	468,6602	0,152	0,068137931
Tractors/Loaders/Backhoes	2021	16	25	Tractors/Loaders/Backhoes_2021_25	0,899672	0,756	4,90172	4,22643	0,005	0,254	0,234	515,1213	0,167	0,074862069
Tractors/Loaders/Backhoes	2021	26	50	Tractors/Loaders/Backhoes_2021_50	0,899672	0,756	4,90172	4,22643	0,005	0,254	0,234	515,1213	0,167	0,074862069
Tractors/Loaders/Backhoes	2021	51	120	Tractors/Loaders/Backhoes_2021_120	0,35209	0,296	3,57072	2,995	0,005	0,177	0,162	475,3621	0,154	0,069034483
Tractors/Loaders/Backhoes	2021	121	175	Tractors/Loaders/Backhoes_2021_175	0,263016	0,221	3,0907	2,06221	0,005	0,104	0,096	467,5285	0,151	0,067689655
Tractors/Loaders/Backhoes	2021	176	250	Tractors/Loaders/Backhoes_2021_250	0,249239	0,209	1,18606	2,36922	0,005	0,08	0,074	470,5716	0,152	0,068137931
Tractors/Loaders/Backhoes	2021	251	500	Tractors/Loaders/Backhoes_2021_500	0,213479	0,179	1,34147	1,776	0,005	0,064	0,059	469,3025	0,152	0,068137931
Tractors/Loaders/Backhoes	2021	501	750	Tractors/Loaders/Backhoes_2021_750	0,294477	0,247	1,43254	2,75417	0,005	0,104	0,096	466,4564	0,151	0,067689655
Tractors/Loaders/Backhoes	2022	16	25	Tractors/Loaders/Backhoes_2022_25	0,818675	0,688	4,75954	4,03024	0,005	0,218	0,2	514,4613	0,166	0,074413793
Tractors/Loaders/Backhoes	2022	26	50	Tractors/Loaders/Backhoes_2022_50	0,818675	0,688	4,75954	4,03024	0,005	0,218	0,2	514,4613	0,166	0,074413793
Tractors/Loaders/Backhoes	2022	51	120	Tractors/Loaders/Backhoes_2022_120	0,309669	0,26	3,53551	2,64718	0,005	0,142	0,131	475,8975	0,154	0,069034483
Tractors/Loaders/Backhoes	2022	121	175	Tractors/Loaders/Backhoes_2022_175	0,237945	0,2	3,07944	1,75274	0,005	0,089	0,082	467,8004	0,151	0,067689655
Tractors/Loaders/Backhoes	2022	176	250	Tractors/Loaders/Backhoes_2022_250	0,222521	0,187	1,16248	1,94251	0,005	0,067	0,062	470,1236	0,152	0,068137931
Tractors/Loaders/Backhoes	2022	251	500	Tractors/Loaders/Backhoes_2022_500	0,190771	0,16	1,28026	1,43694	0,005	0,053	0,049	469,2562	0,152	0,068137931
Tractors/Loaders/Backhoes	2022	501	750	Tractors/Loaders/Backhoes_2022_750	0,276438	0,232	1,35272	2,4532	0,005	0,094	0,087	466,6327	0,151	0,067689655
Tractors/Loaders/Backhoes	2023	16	25	Tractors/Loaders/Backhoes_2023_25	0,738634	0,621	4,62935	3,85698	0,005	0,185	0,17	513,7962	0,166	0,074413793
Tractors/Loaders/Backhoes	2023	26	50	Tractors/Loaders/Backhoes_2023_50	0,738634	0,621	4,62935	3,85698	0,005	0,185	0,17	513,7962	0,166	0,074413793
Tractors/Loaders/Backhoes	2023	51	120	Tractors/Loaders/Backhoes_2023_120	0,284572	0,239	3,52504	2,42607	0,005	0,12	0,11	476,4307	0,154	0,069034483
Tractors/Loaders/Backhoes	2023	121	175	Tractors/Loaders/Backhoes_2023_175	0,219196	0,184	3,0777	1,52095	0,005	0,077	0,07	468,821	0,152	0,068137931
Tractors/Loaders/Backhoes	2023	176	250	Tractors/Loaders/Backhoes_2023_250	0,201205	0,169	1,14809	1,58768	0,005	0,058	0,053	469,7518	0,152	0,068137931
Tractors/Loaders/Backhoes	2023	251	500	Tractors/Loaders/Backhoes_2023_500	0,180818	0,152	1,27923	1,24708	0,005	0,047	0,043	469,4652	0,152	0,068137931
Tractors/Loaders/Backhoes	2023	501	750	Tractors/Loaders/Backhoes_2023_750	0,278685	0,234	1,36081	2,41861	0,005	0,095	0,087	466,6756	0,151	0,067689655
Tractors/Loaders/Backhoes	2024	16	25	Tractors/Loaders/Backhoes_2024_25	0,701609	0,59	4,60899	3,76811	0,005	0,166	0,153	513,8517	0,166	0,074413793
Tractors/Loaders/Backhoes	2024	26	50	Tractors/Loaders/Backhoes_2024_50	0,701609	0,59	4,60899	3,76811	0,005	0,166	0,153	513,8517	0,166	0,074413793
Tractors/Loaders/Backhoes	2024	51	120	Tractors/Loaders/Backhoes_2024_120	0,270597	0,227	3,5318	2,28795	0,005	0,105	0,097	476,7313	0,154	0,069034483
Tractors/Loaders/Backhoes	2024	121	175	Tractors/Loaders/Backhoes_2024_175	0,209421	0,176	3,08913	1,37643	0,005	0,068	0,063	469,4029	0,152	0,068137931
Tractors/Loaders/Backhoes	2024	176	250	Tractors/Loaders/Backhoes_2024_250	0,199431	0,168	1,15125	1,49113	0,005	0,054	0,05	469,9143	0,152	0,068137931
Tractors/Loaders/Backhoes	2024	251	500	Tractors/Loaders/Backhoes_2024_500	0,178929	0,15	1,277	1,16321	0,005	0,044	0,041	470,0841	0,152	0,068137931
Tractors/Loaders/Backhoes	2024	501	750	Tractors/Loaders/Backhoes_2024_750	0,262816	0,221	1,31051	2,21548	0,005	0,085	0,079	466,6381	0,151	0,067689655
Tractors/Loaders/Backhoes	2025	16	25	Tractors/Loaders/Backhoes_2025_25	0,654585	0,55	4,55974	3,66186	0,005	0,145	0,133	513,8025	0,166	0,074413793
Tractors/Loaders/Backhoes	2025	26	50	Tractors/Loaders/Backhoes_2025_50	0,654585	0,55	4,55974	3,66186	0,005	0,145	0,133	513,8025	0,166	0,074413793
Tractors/Loaders/Backhoes	2025	51	120	Tractors/Loaders/Backhoes_2025_120	0,248412	0,209	3,52242	2,10918	0,005	0,085	0,079	477,188	0,154	0,069034483
Tractors/Loaders/Backhoes	2025	121	175	Tractors/Loaders/Backhoes_2025_175	0,192617	0,162	3,08323	1,18039	0,005	0,058	0,054	469,3289	0,152	0,068137931
Tractors/Loaders/Backhoes	2025	176	250	Tractors/Loaders/Backhoes_2025_250	0,183368	0,154	1,14554	1,23458	0,005	0,047	0,044	470,5976	0,152	0,068137931
Tractors/Loaders/Backhoes	2025	251	500	Tractors/Loaders/Backhoes_2025_500	0,171862	0,144	1,23405	1,04575	0,005	0,039	0,036	470,9102	0,152	0,068137931
Tractors/Loaders/Backhoes	2025	501	750	Tractors/Loaders/Backhoes_2025_750	0,222943	0,187	1,26139	1,64868	0,005	0,067	0,062	466,4517	0,151	0,067689655
Tractors/Loaders/Backhoes	2030	16	25	Tractors/Loaders/Backhoes_2030_25	1,765	0,685	2,339	4,332	0,007	0,161	0,161	568,299	0,061	0,027344828
Tractors/Loaders/Backhoes	2030	26	50	Tractors/Loaders/Backhoes_2030_50	2,657	0,539	4,966	3,299	0,007	0,033	0,033	568,299	0,048	0,021517241
Tractors/Loaders/Backhoes	2030	51	120	Tractors/Loaders/Backhoes_2030_120	2,285	0,272	3,705	1,624	0,006	0,03	0,03	568,299	0,024	0,010758621
Tractors/Loaders/Backhoes	2030	121	175	Tractors/Loaders/Backhoes_2030_175	3,178	0,193	3,273	0,485	0,006	0,02	0,02	568,299	0,017	0,00762069
Tractors/Loaders/Backhoes	2030	176	250	Tractors/Loaders/Backhoes_2030_250	5,112	0,183	1,115	0,418	0,006	0,014	0,014	568,299	0,016	0,007172414
Tractors/Loaders/Backhoes	2030	251	500	Tractors/Loaders/Backhoes_2030_500	10,236	0,182	1,066	0,403	0,006	0,014	0,014	568,299	0,016	0,007172414
Tractors/Loaders/Backhoes	2030	501	750	Tractors/Loaders/Backhoes_2030_750	15,363	0,182	1,066	0,407	0,006	0,014	0,014	568,299	0,016	0,007172414
Tractors/Loaders/Backhoes	2035	16	25	Tractors/Loaders/Backhoes_2035_25	1,765	0,685	2,339	4,332	0,007	0,161	0,161	568,299	0,061	0,027344828
Tractors/Loaders/Backhoes	2035	26	50	Tractors/Loaders/Backhoes_2035_50	2,538	0,515	4,949	3,244	0,007	0,022	0,022	568,299	0,046	0,02062069
Tractors/Loaders/Backhoes	2035	51	120	Tractors/Loaders/Backhoes_2035_120	2,17	0,258	3,703	1,521	0,006	0,02	0,02	568,299	0,023	0,010310345
Tractors/Loaders/Backhoes	2035	121	175	Tractors/Loaders/Backhoes_2035_175	2,956	0,179	3,275	0,348	0,006	0,015	0,015	568,299	0,016	0,007172414
Tractors/Loaders/Backhoes	2035	176	250	Tractors/Loaders/Backhoes_2035_250	4,945	0,177	1,115	0,331	0,006	0,012	0,012	568,299	0,016	0,007172414
Tractors/Loaders/Backhoes	2035	251	500	Tractors/Loaders/Backhoes_2035_500	9,922	0,177	1,066	0,326	0,006	0,012	0,012	568,299	0,015	0,006724138
Tractors/Loaders/Backhoes	2035	501	750	Tractors/Loaders/Backhoes_2035_750	14,886	0,177	1,066	0,327	0,006	0,012	0,012	568,299	0,015	0,006724138
Tractors/Loaders/Backhoes	2040	16	25	Tractors/Loaders/Backhoes_2040_25	1,765	0,685	2,339	4,332	0,007	0,161	0,161	568,299	0,061	0,027344828
Tractors/Loaders/Backhoes	2040	26	50	Tractors/Loaders/Backhoes_2040_50	2,506	0,508	4,946	3,22	0,007	0,018	0,018	568,299	0,045	0,020172414
Tractors/Loaders/Backhoes	2040	51	120	Tractors/Loaders/Backhoes_2040_120	2,135	0,254	3,703	1,485	0,006	0,016	0,016	568,299	0,022	0,009862069
Tractors/Loaders/Backhoes	2040	121	175	Tractors/Loaders/Backhoes_2040_175	2,891	0,175	3,276	0,305	0,006	0,012	0,012	568,299	0,015	0,006724138
Tractors/Loaders/Backhoes	2040	176	250	Tractors/Loaders/Backhoes_2040_250	4,877	0,174	1,116	0,297	0,006	0,011	0,011	568,3	0,015	0,006724138
Tractors/Loaders/Backhoes	2040	251	500	Tractors/Loaders/Backhoes_2040_500	9,794	0,174	1,066	0,297	0,006	0,011	0,011	568,299	0,015	0,006724138
Tractors/Loaders/Backhoes	2040	501	750	Tractors/Loaders/Backhoes_2040_750	14,69	0,174	1,066	0,297	0,006	0,011	0,011	568,299	0,015	0,006724138
Trenchers	1990	6	15	Trenchers_1990_15	3,844	1,804	4,999	9,999	1,049	0,975	0,975	568,299	0,162	0,07262069
Trenchers	1990	16	25	Trenchers_1990_25	18,341	2,213	4,999	6,919	0,855	0,741	0,741	568,3	0,199	0,089206897
Trenchers	1990	26	50	Trenchers_1990_50	37,589	4,535	9,232	7,849	0,871	1,215	1,215	568,3	0,409	0,183344828
Trenchers	1990	51	120	Trenchers_1990_120	37,519	2,296	5,621	14,752	0,791	1,284	1,284	568,299	0,207	0,092793103
Trenchers	1990	121	175	Trenchers_1990_175	63,364	1,748	5,014	14,125	0,758	0,96	0,96	568,299	0,157	0,07037931
Trenchers	1990	176	250	Trenchers_1990_250	98,152	1,748	5,014	14,125	0,758	0,96	0,96	568,299	0,157	0,07037931
Trenchers	1990	251	500	Trenchers_1990_500	121,775	1,553	10,572	13,45	0,662	0,827	0,827	568,299	0,14	0,062758621
Trenchers	1990	501	750	Trenchers_1990_750	229,57	1,553	10,572	13,45	1,018	0,843	0,843	568,299	0,14	0,062758621
Trenchers	2000	6	15	Trenchers_2000_15	2,824	1,325	4,257	7,675	0,079	0,61	0,61	568,299	0,119	0,053344828
Trenchers	2000	16	25	Trenchers_2000_25	15,815	1,908	4,438	6,326	0,065	0,555	0,555	568,299	0,172	0,077103448
Trenchers	2000	26	50	Trenchers_2000_50	34,945	4,216	8,713	7,029	0,066	0,89	0,89	568,299	0,38	0,170344828
Trenchers	2000	51	120	Trenchers_2000_120	30,939	1,893	4,777	10,98	0,06	0,882	0,882	568,299	0,17	0,076206897

Trenchers	2000	121	175	Trenchers_2000_175	46,959	1,296	3,969	10,057	0,057	0,541	0,541	568,299	0,116	0,052
Trenchers	2000	176	250	Trenchers_2000_250	64,645	1,151	3,402	9,8	0,057	0,474	0,474	568,299	0,103	0,046172414
Trenchers	2000	251	500	Trenchers_2000_500	81,678	1,042	6,221	9,354	0,05	0,416	0,416	568,299	0,094	0,042137931
Trenchers	2000	501	750	Trenchers_2000_750	153,98	1,042	6,221	9,354	0,052	0,416	0,416	568,299	0,094	0,042137931
Trenchers	2005	6	15	Trenchers_2005_15	1,582	0,742	3,469	4,981	0,079	0,35	0,35	568,299	0,066	0,029586207
Trenchers	2005	16	25	Trenchers_2005_25	7,043	0,849	2,519	5,321	0,065	0,333	0,333	568,3	0,076	0,034068966
Trenchers	2005	26	50	Trenchers_2005_50	32,497	3,921	8,33	6,674	0,066	0,849	0,849	568,299	0,353	0,158241379
Trenchers	2005	51	120	Trenchers_2005_120	27,751	1,698	4,526	9,727	0,06	0,839	0,839	568,299	0,153	0,068586207
Trenchers	2005	121	175	Trenchers_2005_175	40,799	1,126	3,695	8,861	0,057	0,487	0,487	568,299	0,101	0,045275862
Trenchers	2005	176	250	Trenchers_2005_250	51,63	0,92	2,668	8,545	0,057	0,379	0,379	568,299	0,083	0,037206897
Trenchers	2005	251	500	Trenchers_2005_500	63,694	0,812	4,395	7,903	0,05	0,332	0,332	568,299	0,073	0,032724138
Trenchers	2005	501	750	Trenchers_2005_750	121,568	0,822	4,387	8,023	0,052	0,333	0,333	568,299	0,074	0,033172414
Trenchers	2010	6	15	Trenchers_2010_15	1,531711	1,287	5,11336	5,52761	0,005	0,509	0,468	586,297	0,171	0,076655172
Trenchers	2010	16	25	Trenchers_2010_25	1,531711	1,287	5,11336	5,52761	0,005	0,509	0,468	586,297	0,171	0,076655172
Trenchers	2010	26	50	Trenchers_2010_50	1,531711	1,287	5,11336	5,52761	0,005	0,509	0,468	586,297	0,171	0,076655172
Trenchers	2010	51	120	Trenchers_2010_120	1,099287	0,924	4,07421	7,99924	0,005	0,62	0,571	529,306	0,154	0,069034483
Trenchers	2010	121	175	Trenchers_2010_175	0,922781	0,775	3,7406	8,65095	0,005	0,441	0,406	519,6876	0,151	0,067689655
Trenchers	2010	176	250	Trenchers_2010_250	0,705197	0,593	2,36576	7,86432	0,005	0,314	0,288	527,3537	0,154	0,069034483
Trenchers	2010	251	500	Trenchers_2010_500	0,380701	0,32	2,10547	4,85363	0,005	0,176	0,162	523,7828	0,152	0,068137931
Trenchers	2010	501	750	Trenchers_2010_750	0,194919	0,164	1,33412	3,20501	0,005	0,113	0,104	525,788	0,153	0,068586207
Trenchers	2011	6	15	Trenchers_2011_15	1,520162	1,277	5,14932	5,52336	0,005	0,507	0,467	585,033	0,171	0,076655172
Trenchers	2011	16	25	Trenchers_2011_25	1,520162	1,277	5,14932	5,52336	0,005	0,507	0,467	585,033	0,171	0,076655172
Trenchers	2011	26	50	Trenchers_2011_50	1,520162	1,277	5,14932	5,52336	0,005	0,507	0,467	585,033	0,171	0,076655172
Trenchers	2011	51	120	Trenchers_2011_120	1,045215	0,878	4,02646	7,67483	0,005	0,598	0,55	527,7187	0,154	0,069034483
Trenchers	2011	121	175	Trenchers_2011_175	0,916044	0,77	3,73004	8,56359	0,005	0,438	0,403	518,4008	0,151	0,067689655
Trenchers	2011	176	250	Trenchers_2011_250	0,655301	0,551	2,19702	7,41222	0,005	0,29	0,267	525,9543	0,153	0,068586207
Trenchers	2011	251	500	Trenchers_2011_500	0,372561	0,313	2,04569	4,66474	0,005	0,171	0,158	522,8418	0,153	0,068586207
Trenchers	2011	501	750	Trenchers_2011_750	0,180473	0,152	1,33856	2,67369	0,005	0,097	0,089	525,691	0,153	0,068586207
Trenchers	2012	6	15	Trenchers_2012_15	1,545009	1,298	5,24421	5,53504	0,005	0,512	0,471	583,5639	0,171	0,076655172
Trenchers	2012	16	25	Trenchers_2012_25	1,545009	1,298	5,24421	5,53504	0,005	0,512	0,471	583,5639	0,171	0,076655172
Trenchers	2012	26	50	Trenchers_2012_50	1,545009	1,298	5,24421	5,53504	0,005	0,512	0,471	583,5639	0,171	0,076655172
Trenchers	2012	51	120	Trenchers_2012_120	1,052636	0,885	4,05076	7,69459	0,005	0,604	0,556	526,3562	0,154	0,069034483
Trenchers	2012	121	175	Trenchers_2012_175	0,907539	0,763	3,7162	8,45762	0,005	0,436	0,401	517,1147	0,151	0,067689655
Trenchers	2012	176	250	Trenchers_2012_250	0,662356	0,557	2,20863	7,44867	0,005	0,293	0,27	524,572	0,153	0,068586207
Trenchers	2012	251	500	Trenchers_2012_500	0,369046	0,31	2,03349	4,58546	0,005	0,168	0,155	521,6264	0,153	0,068586207
Trenchers	2012	501	750	Trenchers_2012_750	0,135931	0,114	0,95532	2,04792	0,005	0,069	0,064	524,8533	0,154	0,069034483
Trenchers	2013	6	15	Trenchers_2013_15	1,53809	1,292	5,2883	5,51013	0,005	0,509	0,469	580,7693	0,171	0,076655172
Trenchers	2013	16	25	Trenchers_2013_25	1,53809	1,292	5,2883	5,51013	0,005	0,509	0,469	580,7693	0,171	0,076655172
Trenchers	2013	26	50	Trenchers_2013_50	1,53809	1,292	5,2883	5,51013	0,005	0,509	0,469	580,7693	0,171	0,076655172
Trenchers	2013	51	120	Trenchers_2013_120	1,010936	0,849	4,02389	7,45031	0,005	0,582	0,536	523,4236	0,154	0,069034483
Trenchers	2013	121	175	Trenchers_2013_175	0,916392	0,77	3,73732	8,49431	0,005	0,441	0,406	514,53	0,151	0,067689655
Trenchers	2013	176	250	Trenchers_2013_250	0,626949	0,527	2,13383	7,03951	0,005	0,276	0,254	520,4335	0,153	0,068586207
Trenchers	2013	251	500	Trenchers_2013_500	0,376293	0,316	2,04997	4,60225	0,005	0,17	0,156	519,043	0,153	0,068586207
Trenchers	2013	501	750	Trenchers_2013_750	0,144323	0,121	0,96183	2,05561	0,005	0,07	0,065	522,2778	0,154	0,069034483
Trenchers	2014	6	15	Trenchers_2014_15	1,508934	1,268	5,29329	5,45539	0,005	0,501	0,46	577,7275	0,171	0,076655172
Trenchers	2014	16	25	Trenchers_2014_25	1,508934	1,268	5,29329	5,45539	0,005	0,501	0,46	577,7275	0,171	0,076655172
Trenchers	2014	26	50	Trenchers_2014_50	1,508934	1,268	5,29329	5,45539	0,005	0,501	0,46	577,7275	0,171	0,076655172
Trenchers	2014	51	120	Trenchers_2014_120	0,973633	0,818	3,99876	7,2172	0,005	0,563	0,518	520,7658	0,154	0,069034483
Trenchers	2014	121	175	Trenchers_2014_175	0,824366	0,693	3,66799	7,69921	0,005	0,395	0,364	512,1475	0,151	0,067689655
Trenchers	2014	176	250	Trenchers_2014_250	0,591196	0,497	2,07009	6,48427	0,005	0,258	0,237	517,7188	0,153	0,068586207
Trenchers	2014	251	500	Trenchers_2014_500	0,364023	0,306	2,03515	4,37019	0,005	0,161	0,148	513,7439	0,152	0,068137931
Trenchers	2014	501	750	Trenchers_2014_750	0,140019	0,118	0,96403	1,825	0,005	0,061	0,056	519,6576	0,154	0,069034483
Trenchers	2015	6	15	Trenchers_2015_15	1,498018	1,259	5,32346	5,40567	0,005	0,493	0,454	571,6674	0,171	0,076655172
Trenchers	2015	16	25	Trenchers_2015_25	1,498018	1,259	5,32346	5,40567	0,005	0,493	0,454	571,6674	0,171	0,076655172
Trenchers	2015	26	50	Trenchers_2015_50	1,498018	1,259	5,32346	5,40567	0,005	0,493	0,454	571,6674	0,171	0,076655172
Trenchers	2015	51	120	Trenchers_2015_120	0,972367	0,817	4,01434	7,17857	0,005	0,562	0,517	515,3955	0,154	0,069034483
Trenchers	2015	121	175	Trenchers_2015_175	0,829448	0,697	3,68389	7,67382	0,005	0,396	0,364	506,9434	0,151	0,067689655
Trenchers	2015	176	250	Trenchers_2015_250	0,597101	0,502	2,0797	6,50988	0,005	0,26	0,239	512,4325	0,153	0,068586207
Trenchers	2015	251	500	Trenchers_2015_500	0,370644	0,311	2,05093	4,38344	0,005	0,163	0,15	508,3296	0,152	0,068137931
Trenchers	2015	501	750	Trenchers_2015_750	0,135272	0,114	0,96532	1,62336	0,005	0,053	0,049	514,4002	0,154	0,069034483
Trenchers	2016	6	15	Trenchers_2016_15	1,450442	1,219	5,28497	5,29818	0,005	0,475	0,437	565,9942	0,171	0,076655172
Trenchers	2016	16	25	Trenchers_2016_25	1,450442	1,219	5,28497	5,29818	0,005	0,475	0,437	565,9942	0,171	0,076655172
Trenchers	2016	26	50	Trenchers_2016_50	1,450442	1,219	5,28497	5,29818	0,005	0,475	0,437	565,9942	0,171	0,076655172
Trenchers	2016	51	120	Trenchers_2016_120	0,937737	0,788	3,98822	6,90219	0,005	0,541	0,498	509,9027	0,154	0,069034483
Trenchers	2016	121	175	Trenchers_2016_175	0,693219	0,582	3,50717	6,50303	0,005	0,328	0,302	501,7809	0,151	0,067689655
Trenchers	2016	176	250	Trenchers_2016_250	0,58008	0,487	2,03007	6,31168	0,005	0,251	0,231	507,1448	0,153	0,068586207
Trenchers	2016	251	500	Trenchers_2016_500	0,351818	0,296	1,96649	4,09912	0,005	0,15	0,138	504,4103	0,152	0,068137931
Trenchers	2016	501	750	Trenchers_2016_750	0,142468	0,12	0,97148	1,63008	0,005	0,054	0,05	509,1433	0,154	0,069034483
Trenchers	2017	6	15	Trenchers_2017_15	1,367315	1,149	5,19682	5,16614	0,005	0,449	0,413	557,4601	0,171	0,076655172
Trenchers	2017	16	25	Trenchers_2017_25	1,367315	1,149	5,19682	5,16614	0,005	0,449	0,413	557,4601	0,171	0,076655172
Trenchers	2017	26	50	Trenchers_2017_50	1,367315	1,149	5,19682	5,16614	0,005	0,449	0,413	557,4601	0,171	0,076655172
Trenchers	2017	51	120	Trenchers_2017_120	0,906302	0,762	3,96827	6,67876	0,005	0,523	0,481	501,9916	0,154	0,069034483
Trenchers	2017	121	175	Trenchers_2017_175	0,638299	0,536	3,43391	5,92725	0,005	0,3	0,276	493,7642	0,151	0,067689655

Trenchers	2017	176	250	Trenchers_2017_250	0,577948	0,486	2,03655	6,19428	0,005	0,25	0,23	499,2281	0,153	0,068586207
Trenchers	2017	251	500	Trenchers_2017_500	0,315778	0,265	1,96603	3,44157	0,005	0,129	0,119	497,0197	0,152	0,068137931
Trenchers	2017	501	750	Trenchers_2017_750	0,135465	0,114	0,97168	1,42958	0,005	0,046	0,042	501,1831	0,154	0,069034483
Trenchers	2018	6	15	Trenchers_2018_15	1,236195	1,039	5,01831	4,95997	0,005	0,409	0,377	548,3607	0,171	0,076655172
Trenchers	2018	16	25	Trenchers_2018_25	1,236195	1,039	5,01831	4,95997	0,005	0,409	0,377	548,3607	0,171	0,076655172
Trenchers	2018	26	50	Trenchers_2018_50	1,236195	1,039	5,01831	4,95997	0,005	0,409	0,377	548,3607	0,171	0,076655172
Trenchers	2018	51	120	Trenchers_2018_120	0,78315	0,658	3,85487	5,91527	0,005	0,45	0,414	493,715	0,154	0,069034483
Trenchers	2018	121	175	Trenchers_2018_175	0,559787	0,47	3,33134	5,12742	0,005	0,261	0,24	485,9254	0,151	0,067689655
Trenchers	2018	176	250	Trenchers_2018_250	0,498602	0,419	1,84856	5,29554	0,005	0,212	0,195	491,5649	0,153	0,068586207
Trenchers	2018	251	500	Trenchers_2018_500	0,30464	0,256	1,97444	3,21114	0,005	0,121	0,112	489,6281	0,152	0,068137931
Trenchers	2018	501	750	Trenchers_2018_750	0,111849	0,094	0,96632	1,02523	0,005	0,029	0,026	494,6426	0,154	0,069034483
Trenchers	2019	6	15	Trenchers_2019_15	1,136688	0,955	4,89183	4,78464	0,005	0,377	0,347	539,1037	0,171	0,076655172
Trenchers	2019	16	25	Trenchers_2019_25	1,136688	0,955	4,89183	4,78464	0,005	0,377	0,347	539,1037	0,171	0,076655172
Trenchers	2019	26	50	Trenchers_2019_50	1,136688	0,955	4,89183	4,78464	0,005	0,377	0,347	539,1037	0,171	0,076655172
Trenchers	2019	51	120	Trenchers_2019_120	0,751452	0,631	3,83677	5,69508	0,005	0,431	0,396	485,3635	0,154	0,069034483
Trenchers	2019	121	175	Trenchers_2019_175	0,547248	0,46	3,34151	4,95976	0,005	0,255	0,234	478,1294	0,151	0,067689655
Trenchers	2019	176	250	Trenchers_2019_250	0,481784	0,405	1,81019	5,04653	0,005	0,203	0,187	484,1167	0,153	0,068586207
Trenchers	2019	251	500	Trenchers_2019_500	0,302803	0,254	1,98689	3,12824	0,005	0,118	0,109	482,1648	0,153	0,068586207
Trenchers	2019	501	750	Trenchers_2019_750	0,09296	0,078	0,95644	0,70662	0,005	0,015	0,014	484,5422	0,153	0,068586207
Trenchers	2020	6	15	Trenchers_2020_15	1,076913	0,905	4,8331	4,67651	0,005	0,356	0,328	527,0962	0,17	0,076206897
Trenchers	2020	16	25	Trenchers_2020_25	1,076913	0,905	4,8331	4,67651	0,005	0,356	0,328	527,0962	0,17	0,076206897
Trenchers	2020	26	50	Trenchers_2020_50	1,076913	0,905	4,8331	4,67651	0,005	0,356	0,328	527,0962	0,17	0,076206897
Trenchers	2020	51	120	Trenchers_2020_120	0,726229	0,61	3,83272	5,51952	0,005	0,413	0,38	475,1265	0,154	0,069034483
Trenchers	2020	121	175	Trenchers_2020_175	0,500709	0,421	3,32968	4,46042	0,005	0,228	0,21	467,7348	0,151	0,067689655
Trenchers	2020	176	250	Trenchers_2020_250	0,466499	0,392	1,77405	4,8091	0,005	0,195	0,179	473,5951	0,153	0,068586207
Trenchers	2020	251	500	Trenchers_2020_500	0,276702	0,233	1,85932	2,775	0,005	0,105	0,097	470,6367	0,152	0,068137931
Trenchers	2020	501	750	Trenchers_2020_750	0,083454	0,07	0,95004	0,56006	0,005	0,009	0,008	472,6556	0,153	0,068586207
Trenchers	2021	6	15	Trenchers_2021_15	0,962829	0,809	4,66576	4,45891	0,005	0,313	0,288	527,0165	0,17	0,076206897
Trenchers	2021	16	25	Trenchers_2021_25	0,962829	0,809	4,66576	4,45891	0,005	0,313	0,288	527,0165	0,17	0,076206897
Trenchers	2021	26	50	Trenchers_2021_50	0,962829	0,809	4,66576	4,45891	0,005	0,313	0,288	527,0165	0,17	0,076206897
Trenchers	2021	51	120	Trenchers_2021_120	0,661739	0,556	3,78912	5,10594	0,005	0,371	0,341	475,287	0,154	0,069034483
Trenchers	2021	121	175	Trenchers_2021_175	0,483838	0,407	3,30363	4,27237	0,005	0,219	0,201	467,7343	0,151	0,067689655
Trenchers	2021	176	250	Trenchers_2021_250	0,42408	0,356	1,66826	4,36036	0,005	0,172	0,158	473,8538	0,153	0,068586207
Trenchers	2021	251	500	Trenchers_2021_500	0,263326	0,221	1,86493	2,49105	0,005	0,1	0,092	470,701	0,152	0,068137931
Trenchers	2021	501	750	Trenchers_2021_750	0,078358	0,066	0,94677	0,47513	0,005	0,009	0,008	472,5289	0,153	0,068586207
Trenchers	2022	6	15	Trenchers_2022_15	0,859634	0,722	4,51833	4,26873	0,005	0,275	0,253	527,0258	0,17	0,076206897
Trenchers	2022	16	25	Trenchers_2022_25	0,859634	0,722	4,51833	4,26873	0,005	0,275	0,253	527,0258	0,17	0,076206897
Trenchers	2022	26	50	Trenchers_2022_50	0,859634	0,722	4,51833	4,26873	0,005	0,275	0,253	527,0258	0,17	0,076206897
Trenchers	2022	51	120	Trenchers_2022_120	0,629528	0,529	3,77843	4,91345	0,005	0,348	0,32	475,3262	0,154	0,069034483
Trenchers	2022	121	175	Trenchers_2022_175	0,470645	0,395	3,31289	4,10333	0,005	0,211	0,195	467,7337	0,151	0,067689655
Trenchers	2022	176	250	Trenchers_2022_250	0,398562	0,335	1,66329	3,85292	0,005	0,16	0,148	473,8512	0,153	0,068586207
Trenchers	2022	251	500	Trenchers_2022_500	0,252168	0,212	1,87233	2,21226	0,005	0,094	0,086	470,5845	0,152	0,068137931
Trenchers	2022	501	750	Trenchers_2022_750	0,067683	0,057	0,94489	0,30138	0,005	0,009	0,008	474,2887	0,153	0,068586207
Trenchers	2023	6	15	Trenchers_2023_15	0,763609	0,642	4,30164	3,95873	0,005	0,22	0,202	527,0954	0,17	0,076206897
Trenchers	2023	16	25	Trenchers_2023_25	0,763609	0,642	4,30164	3,95873	0,005	0,22	0,202	527,0954	0,17	0,076206897
Trenchers	2023	26	50	Trenchers_2023_50	0,763609	0,642	4,30164	3,95873	0,005	0,22	0,202	527,0954	0,17	0,076206897
Trenchers	2023	51	120	Trenchers_2023_120	0,599816	0,504	3,76842	4,70045	0,005	0,326	0,3	475,6903	0,154	0,069034483
Trenchers	2023	121	175	Trenchers_2023_175	0,427489	0,359	3,29061	3,65725	0,005	0,185	0,171	467,7332	0,151	0,067689655
Trenchers	2023	176	250	Trenchers_2023_250	0,390278	0,328	1,6386	3,7365	0,005	0,155	0,143	473,8485	0,153	0,068586207
Trenchers	2023	251	500	Trenchers_2023_500	0,236268	0,199	1,72273	2,00504	0,005	0,085	0,078	471,6125	0,153	0,068586207
Trenchers	2023	501	750	Trenchers_2023_750	0,071688	0,06	0,95111	0,30278	0,005	0,009	0,008	474,4705	0,153	0,068586207
Trenchers	2024	6	15	Trenchers_2024_15	0,714783	0,601	4,23326	3,83415	0,005	0,197	0,181	527,0216	0,17	0,076206897
Trenchers	2024	16	25	Trenchers_2024_25	0,714783	0,601	4,23326	3,83415	0,005	0,197	0,181	527,0216	0,17	0,076206897
Trenchers	2024	26	50	Trenchers_2024_50	0,714783	0,601	4,23326	3,83415	0,005	0,197	0,181	527,0216	0,17	0,076206897
Trenchers	2024	51	120	Trenchers_2024_120	0,588274	0,494	3,76854	4,59319	0,005	0,318	0,292	475,6324	0,154	0,069034483
Trenchers	2024	121	175	Trenchers_2024_175	0,432612	0,364	3,31073	3,66715	0,005	0,187	0,172	467,7326	0,151	0,067689655
Trenchers	2024	176	250	Trenchers_2024_250	0,370794	0,312	1,59847	3,48285	0,005	0,145	0,134	473,8455	0,153	0,068586207
Trenchers	2024	251	500	Trenchers_2024_500	0,228039	0,192	1,66789	1,85871	0,005	0,08	0,074	469,9942	0,152	0,068137931
Trenchers	2024	501	750	Trenchers_2024_750	0,076605	0,064	0,95838	0,30435	0,005	0,009	0,008	474,4782	0,153	0,068586207
Trenchers	2025	6	15	Trenchers_2025_15	0,645012	0,542	4,11956	3,65681	0,005	0,163	0,15	527,1603	0,17	0,076206897
Trenchers	2025	16	25	Trenchers_2025_25	0,645012	0,542	4,11956	3,65681	0,005	0,163	0,15	527,1603	0,17	0,076206897
Trenchers	2025	26	50	Trenchers_2025_50	0,645012	0,542	4,11956	3,65681	0,005	0,163	0,15	527,1603	0,17	0,076206897
Trenchers	2025	51	120	Trenchers_2025_120	0,5433	0,457	3,73437	4,279	0,005	0,285	0,262	475,9014	0,154	0,069034483
Trenchers	2025	121	175	Trenchers_2025_175	0,426125	0,358	3,30907	3,54907	0,005	0,179	0,165	467,732	0,151	0,067689655
Trenchers	2025	176	250	Trenchers_2025_250	0,365033	0,307	1,60076	3,31521	0,005	0,144	0,132	473,9168	0,153	0,068586207
Trenchers	2025	251	500	Trenchers_2025_500	0,227307	0,191	1,67595	1,82613	0,005	0,079	0,072	470,4394	0,152	0,068137931
Trenchers	2025	501	750	Trenchers_2025_750	0,079299	0,067	0,96233	0,30526	0,005	0,009	0,008	474,4863	0,153	0,068586207
Trenchers	2030	6	15	Trenchers_2030_15	1,409	0,661	3,469	4,142	0,008	0,161	0,161	568,299	0,059	0,026448276
Trenchers	2030	16	25	Trenchers_2030_25	5,681	0,685	2,339	4,332	0,007	0,161	0,161	568,299	0,061	0,027344828
Trenchers	2030	26	50	Trenchers_2030_50	7,055	0,851	5,208	3,835	0,007	0,144	0,144	568,299	0,076	0,034068966
Trenchers	2030	51	120	Trenchers_2030_120	6,697	0,409	3,743	2,559	0,006	0,132	0,132	568,299	0,036	0,016137931
Trenchers	2030	121	175	Trenchers_2030_175	10,904	0,3	3,273	1,529	0,006	0,08	0,08	568,3	0,027	0,012103448
Trenchers	2030	176	250	Trenchers_2030_250	14,406	0,256	1,188	1,348	0,006	0,049	0,049	568,3	0,023	0,010310345

Trenchers	2030	251	500	Trenchers_2030_500	19,534	0,249	1,209	1,231	0,005	0,046	0,046	568,299	0,022	0,009862069
Trenchers	2030	501	750	Trenchers_2030_750	36,902	0,249	1,209	1,254	0,005	0,047	0,047	568,299	0,022	0,009862069
Trenchers	2035	6	15	Trenchers_2035_15	1,409	0,661	3,469	4,142	0,008	0,161	0,161	568,299	0,059	0,026448276
Trenchers	2035	16	25	Trenchers_2035_25	5,681	0,685	2,339	4,332	0,007	0,161	0,161	568,299	0,061	0,027344828
Trenchers	2035	26	50	Trenchers_2035_50	5,645	0,681	5,055	3,548	0,007	0,084	0,084	568,299	0,061	0,027344828
Trenchers	2035	51	120	Trenchers_2035_120	5,437	0,332	3,713	2,049	0,006	0,076	0,076	568,3	0,03	0,013448276
Trenchers	2035	121	175	Trenchers_2035_175	8,756	0,241	3,264	0,966	0,006	0,048	0,048	568,299	0,021	0,009413793
Trenchers	2035	176	250	Trenchers_2035_250	12,171	0,216	1,149	0,847	0,006	0,031	0,031	568,299	0,019	0,008517241
Trenchers	2035	251	500	Trenchers_2035_500	16,707	0,213	1,126	0,79	0,005	0,029	0,029	568,299	0,019	0,008517241
Trenchers	2035	501	750	Trenchers_2035_750	31,529	0,213	1,126	0,801	0,005	0,029	0,029	568,3	0,019	0,008517241
Trenchers	2040	6	15	Trenchers_2040_15	1,409	0,661	3,469	4,142	0,008	0,161	0,161	568,299	0,059	0,026448276
Trenchers	2040	16	25	Trenchers_2040_25	5,681	0,685	2,339	4,332	0,007	0,161	0,161	568,299	0,061	0,027344828
Trenchers	2040	26	50	Trenchers_2040_50	4,961	0,598	4,98	3,374	0,007	0,052	0,052	568,299	0,054	0,024206897
Trenchers	2040	51	120	Trenchers_2040_120	4,791	0,293	3,699	1,767	0,006	0,047	0,047	568,299	0,026	0,011655172
Trenchers	2040	121	175	Trenchers_2040_175	7,533	0,207	3,26	0,639	0,006	0,03	0,03	568,3	0,018	0,008068966
Trenchers	2040	176	250	Trenchers_2040_250	10,853	0,193	1,126	0,573	0,006	0,02	0,02	568,3	0,017	0,00762069
Trenchers	2040	251	500	Trenchers_2040_500	15,011	0,191	1,081	0,542	0,005	0,02	0,02	568,3	0,017	0,00762069
Trenchers	2040	501	750	Trenchers_2040_750	28,323	0,191	1,081	0,549	0,005	0,02	0,02	568,299	0,017	0,00762069
Welders	1990	6	15	Welders_1990_15	4,525	1,804	4,999	9,999	1,018	0,974	0,974	568,299	0,162	0,07262069
Welders	1990	16	25	Welders_1990_25	10,092	2,213	4,999	6,919	0,83	0,74	0,74	568,299	0,199	0,089206897
Welders	1990	26	50	Welders_1990_50	40,899	3,899	8,078	7,611	0,846	1,085	1,085	568,3	0,351	0,157344828
Welders	1990	51	120	Welders_1990_120	33,632	2,107	5,312	13,999	0,768	1,146	1,146	568,3	0,19	0,085172414
Welders	1990	121	175	Welders_1990_175	57,219	1,442	4,703	12,598	0,736	0,761	0,761	568,299	0,13	0,058275862
Welders	1990	176	250	Welders_1990_250	69,387	1,442	4,703	12,598	0,736	0,761	0,761	568,299	0,13	0,058275862
Welders	1990	251	500	Welders_1990_500	88,323	1,304	8,704	12,141	0,642	0,672	0,672	568,3	0,117	0,052448276
Welders	2000	6	15	Welders_2000_15	4,323	1,723	4,875	9,08	0,079	0,747	0,747	568,299	0,155	0,069482759
Welders	2000	16	25	Welders_2000_25	9,556	2,095	4,783	6,405	0,065	0,569	0,569	568,299	0,189	0,084724138
Welders	2000	26	50	Welders_2000_50	38,432	3,664	7,708	6,797	0,066	0,803	0,803	568,299	0,33	0,147931034
Welders	2000	51	120	Welders_2000_120	27,201	1,704	4,433	10,046	0,06	0,791	0,791	568,3	0,153	0,068586207
Welders	2000	121	175	Welders_2000_175	45,269	1,14	3,61	9,126	0,057	0,468	0,468	568,299	0,102	0,045724138
Welders	2000	176	250	Welders_2000_250	45,901	0,954	2,869	8,783	0,057	0,384	0,384	568,299	0,086	0,038551724
Welders	2000	251	500	Welders_2000_500	59,514	0,878	4,719	8,466	0,05	0,344	0,344	568,299	0,079	0,035413793
Welders	2005	6	15	Welders_2005_15	3,497	1,394	4,38	7,817	0,079	0,621	0,621	568,299	0,125	0,056034483
Welders	2005	16	25	Welders_2005_25	7,401	1,622	3,922	6,014	0,065	0,483	0,483	568,299	0,146	0,065448276
Welders	2005	26	50	Welders_2005_50	34,243	3,264	7,144	6,342	0,066	0,746	0,746	568,299	0,294	0,131793103
Welders	2005	51	120	Welders_2005_120	23,288	1,459	4,096	8,459	0,06	0,733	0,733	568,299	0,131	0,058724138
Welders	2005	121	175	Welders_2005_175	37,837	0,953	3,26	7,736	0,057	0,405	0,405	568,299	0,086	0,038551724
Welders	2005	176	250	Welders_2005_250	32,839	0,682	1,941	7,302	0,057	0,268	0,268	568,299	0,061	0,027344828
Welders	2005	251	500	Welders_2005_500	41,097	0,606	2,566	6,755	0,05	0,241	0,241	568,299	0,054	0,024206897
Welders	2010	6	15	Welders_2010_15	2,82	1,124	4,027	6,554	0,008	0,473	0,473	568,3	0,101	0,045275862
Welders	2010	16	25	Welders_2010_25	5,78	1,267	3,309	5,477	0,007	0,384	0,384	568,299	0,114	0,051103448
Welders	2010	26	50	Welders_2010_50	27,885	2,658	6,571	5,944	0,007	0,623	0,623	568,299	0,239	0,107137931
Welders	2010	51	120	Welders_2010_120	18,341	1,149	3,928	6,999	0,006	0,61	0,61	568,299	0,103	0,046172414
Welders	2010	121	175	Welders_2010_175	30,26	0,762	3,185	6,255	0,006	0,338	0,338	568,299	0,068	0,030482759
Welders	2010	176	250	Welders_2010_250	23,908	0,496	1,433	5,857	0,006	0,189	0,189	568,299	0,044	0,019724138
Welders	2010	251	500	Welders_2010_500	30,15	0,445	1,621	5,26	0,005	0,174	0,174	568,299	0,04	0,017931034
Welders	2011	6	15	Welders_2011_15	2,677	1,067	3,952	6,283	0,008	0,441	0,441	568,299	0,096	0,043034483
Welders	2011	16	25	Welders_2011_25	5,436	1,192	3,179	5,36	0,007	0,361	0,361	568,3	0,107	0,047965517
Welders	2011	26	50	Welders_2011_50	26,104	2,488	6,392	5,85	0,007	0,593	0,593	568,299	0,224	0,100413793
Welders	2011	51	120	Welders_2011_120	17,199	1,077	3,891	6,632	0,006	0,584	0,584	568,3	0,097	0,043482759
Welders	2011	121	175	Welders_2011_175	28,559	0,719	3,173	5,91	0,006	0,325	0,325	568,299	0,064	0,028689655
Welders	2011	176	250	Welders_2011_250	22,03	0,457	1,34	5,462	0,006	0,17	0,17	568,299	0,041	0,01837931
Welders	2011	251	500	Welders_2011_500	27,869	0,411	1,473	4,886	0,005	0,157	0,157	568,299	0,037	0,016586207
Welders	2012	6	15	Welders_2012_15	2,527	1,007	3,874	5,999	0,008	0,407	0,407	568,299	0,09	0,040344828
Welders	2012	16	25	Welders_2012_25	5,076	1,113	3,043	5,239	0,007	0,337	0,337	568,299	0,1	0,044827586
Welders	2012	26	50	Welders_2012_50	24,122	2,299	6,185	5,749	0,007	0,56	0,56	568,299	0,207	0,092793103
Welders	2012	51	120	Welders_2012_120	15,992	1,001	3,852	6,232	0,006	0,549	0,549	568,299	0,09	0,040344828
Welders	2012	121	175	Welders_2012_175	26,736	0,673	3,161	5,543	0,006	0,303	0,303	568,299	0,06	0,026896552
Welders	2012	176	250	Welders_2012_250	20,583	0,427	1,281	5,087	0,006	0,154	0,154	568,299	0,038	0,017034483
Welders	2012	251	500	Welders_2012_500	26,151	0,386	1,369	4,532	0,005	0,144	0,144	568,299	0,034	0,015241379
Welders	2013	6	15	Welders_2013_15	2,378	0,948	3,796	5,716	0,008	0,373	0,373	568,299	0,085	0,038103448
Welders	2013	16	25	Welders_2013_25	4,718	1,034	2,907	5,117	0,007	0,314	0,314	568,299	0,093	0,041689655
Welders	2013	26	50	Welders_2013_50	22,037	2,101	5,967	5,526	0,007	0,517	0,517	568,299	0,189	0,084724138
Welders	2013	51	120	Welders_2013_120	14,766	0,925	3,813	5,836	0,006	0,507	0,507	568,3	0,083	0,037206897

Welders	2013	121	175	Welders_2013_175	24,884	0,627	3,151	5,195	0,006	0,279	0,279	568,299	0,056	0,025103448
Welders	2013	176	250	Welders_2013_250	19,36	0,402	1,241	4,723	0,006	0,141	0,141	568,299	0,036	0,016137931
Welders	2013	251	500	Welders_2013_500	24,728	0,365	1,291	4,191	0,005	0,131	0,131	568,299	0,032	0,014344828
Welders	2014	6	15	Welders_2014_15	2,237	0,891	3,723	5,445	0,008	0,341	0,341	568,3	0,08	0,035862069
Welders	2014	16	25	Welders_2014_25	4,381	0,96	2,78	5	0,007	0,291	0,291	568,299	0,086	0,038551724
Welders	2014	26	50	Welders_2014_50	19,935	1,9	5,749	5,308	0,007	0,473	0,473	568,3	0,171	0,076655172
Welders	2014	51	120	Welders_2014_120	13,552	0,849	3,774	5,481	0,006	0,464	0,464	568,299	0,076	0,034068966
Welders	2014	121	175	Welders_2014_175	23,067	0,581	3,141	4,862	0,006	0,255	0,255	568,299	0,052	0,023310345
Welders	2014	176	250	Welders_2014_250	18,135	0,376	1,207	4,297	0,006	0,128	0,128	568,299	0,034	0,015241379
Welders	2014	251	500	Welders_2014_500	23,294	0,343	1,227	3,788	0,005	0,119	0,119	568,299	0,031	0,013896552
Welders	2015	6	15	Welders_2015_15	2,109	0,84	3,658	5,196	0,008	0,311	0,311	568,299	0,075	0,03362069
Welders	2015	16	25	Welders_2015_25	4,078	0,894	2,666	4,89	0,007	0,27	0,27	568,299	0,08	0,035862069
Welders	2015	26	50	Welders_2015_50	17,994	1,715	5,562	5,113	0,007	0,43	0,43	568,3	0,154	0,069034483
Welders	2015	51	120	Welders_2015_120	12,337	0,772	3,738	5,077	0,006	0,419	0,419	568,299	0,069	0,030931034
Welders	2015	121	175	Welders_2015_175	21,139	0,532	3,133	4,408	0,006	0,23	0,23	568,299	0,048	0,021517241
Welders	2015	176	250	Welders_2015_250	16,976	0,352	1,178	3,88	0,006	0,116	0,116	568,299	0,031	0,013896552
Welders	2015	251	500	Welders_2015_500	21,953	0,324	1,176	3,398	0,005	0,108	0,108	568,299	0,029	0,013
Welders	2016	6	15	Welders_2016_15	2,03	0,809	3,622	5,023	0,008	0,289	0,289	568,299	0,073	0,032724138
Welders	2016	16	25	Welders_2016_25	3,903	0,855	2,604	4,803	0,007	0,255	0,255	568,299	0,077	0,034517241
Welders	2016	26	50	Welders_2016_50	16,155	1,54	5,395	4,936	0,007	0,389	0,389	568,299	0,138	0,061862069
Welders	2016	51	120	Welders_2016_120	11,165	0,699	3,705	4,692	0,006	0,375	0,375	568,3	0,063	0,028241379
Welders	2016	121	175	Welders_2016_175	19,285	0,486	3,128	3,973	0,006	0,206	0,206	568,299	0,043	0,019275862
Welders	2016	176	250	Welders_2016_250	15,901	0,33	1,153	3,481	0,006	0,104	0,104	568,299	0,029	0,013
Welders	2016	251	500	Welders_2016_500	20,731	0,306	1,134	3,032	0,005	0,097	0,097	568,299	0,027	0,012103448
Welders	2017	6	15	Welders_2017_15	1,973	0,786	3,599	4,887	0,008	0,272	0,272	568,299	0,07	0,03137931
Welders	2017	16	25	Welders_2017_25	3,785	0,83	2,564	4,729	0,007	0,243	0,243	568,299	0,074	0,033172414
Welders	2017	26	50	Welders_2017_50	14,392	1,372	5,239	4,768	0,007	0,35	0,35	568,299	0,123	0,055137931
Welders	2017	51	120	Welders_2017_120	10,06	0,63	3,675	4,328	0,006	0,332	0,332	568,299	0,056	0,025103448
Welders	2017	121	175	Welders_2017_175	17,561	0,442	3,124	3,562	0,006	0,183	0,183	568,299	0,039	0,017482759
Welders	2017	176	250	Welders_2017_250	14,942	0,31	1,133	3,105	0,006	0,094	0,094	568,299	0,028	0,012551724
Welders	2017	251	500	Welders_2017_500	19,705	0,29	1,102	2,713	0,005	0,088	0,088	568,299	0,026	0,011655172
Welders	2018	6	15	Welders_2018_15	1,923	0,766	3,58	4,762	0,008	0,256	0,256	568,3	0,069	0,030931034
Welders	2018	16	25	Welders_2018_25	3,684	0,807	2,531	4,661	0,007	0,232	0,232	568,299	0,072	0,032275862
Welders	2018	26	50	Welders_2018_50	12,698	1,21	5,092	4,607	0,007	0,311	0,311	568,299	0,109	0,048862069
Welders	2018	51	120	Welders_2018_120	9,016	0,564	3,648	3,98	0,006	0,29	0,29	568,299	0,05	0,022413793
Welders	2018	121	175	Welders_2018_175	15,966	0,402	3,123	3,176	0,006	0,162	0,162	568,299	0,036	0,016137931
Welders	2018	176	250	Welders_2018_250	14,068	0,292	1,118	2,751	0,006	0,084	0,084	568,299	0,026	0,011655172
Welders	2018	251	500	Welders_2018_500	18,804	0,277	1,08	2,43	0,005	0,08	0,08	568,299	0,025	0,011206897
Welders	2019	6	15	Welders_2019_15	1,877	0,748	3,562	4,647	0,008	0,241	0,241	568,299	0,067	0,030034483
Welders	2019	16	25	Welders_2019_25	3,592	0,787	2,501	4,596	0,007	0,222	0,222	568,299	0,071	0,031827586
Welders	2019	26	50	Welders_2019_50	11,071	1,055	4,95	4,449	0,007	0,273	0,273	568,299	0,095	0,042586207
Welders	2019	51	120	Welders_2019_120	8,032	0,503	3,623	3,648	0,006	0,25	0,25	568,299	0,045	0,020172414
Welders	2019	121	175	Welders_2019_175	14,693	0,37	3,122	2,832	0,006	0,143	0,143	568,3	0,033	0,014793103
Welders	2019	176	250	Welders_2019_250	13,284	0,276	1,104	2,432	0,006	0,075	0,075	568,299	0,024	0,010758621
Welders	2019	251	500	Welders_2019_500	17,937	0,264	1,065	2,163	0,005	0,072	0,072	568,3	0,023	0,010310345
Welders	2020	6	15	Welders_2020_15	1,835	0,731	3,546	4,542	0,008	0,227	0,227	568,299	0,066	0,029586207
Welders	2020	16	25	Welders_2020_25	3,507	0,769	2,473	4,538	0,007	0,212	0,212	568,299	0,069	0,030931034
Welders	2020	26	50	Welders_2020_50	9,83	0,937	4,84	4,304	0,007	0,238	0,238	568,299	0,084	0,037655172
Welders	2020	51	120	Welders_2020_120	7,278	0,455	3,605	3,351	0,006	0,216	0,216	568,299	0,041	0,01837931
Welders	2020	121	175	Welders_2020_175	13,663	0,344	3,122	2,523	0,006	0,127	0,127	568,299	0,031	0,013896552
Welders	2020	176	250	Welders_2020_250	12,577	0,261	1,093	2,143	0,006	0,066	0,066	568,299	0,023	0,010310345
Welders	2020	251	500	Welders_2020_500	17,094	0,252	1,055	1,91	0,005	0,064	0,064	568,299	0,022	0,009862069
Welders	2021	6	15	Welders_2021_15	1,8	0,717	3,531	4,462	0,008	0,214	0,214	568,299	0,064	0,028689655
Welders	2021	16	25	Welders_2021_25	3,431	0,752	2,446	4,497	0,007	0,201	0,201	568,299	0,067	0,030034483
Welders	2021	26	50	Welders_2021_50	8,704	0,829	4,708	4,133	0,007	0,203	0,203	568,299	0,074	0,033172414
Welders	2021	51	120	Welders_2021_120	6,572	0,411	3,579	3,042	0,006	0,184	0,184	568,299	0,037	0,016586207
Welders	2021	121	175	Welders_2021_175	12,512	0,315	3,112	2,189	0,006	0,11	0,11	568,299	0,028	0,012551724
Welders	2021	176	250	Welders_2021_250	11,711	0,243	1,081	1,836	0,006	0,057	0,057	568,299	0,021	0,009413793
Welders	2021	251	500	Welders_2021_500	15,998	0,236	1,044	1,642	0,005	0,055	0,055	568,299	0,021	0,009413793
Welders	2022	6	15	Welders_2022_15	1,774	0,707	3,519	4,408	0,008	0,203	0,203	568,3	0,063	0,028241379

Welders	2022	16	25	Welders_2022_25	3,374	0,739	2,426	4,47	0,007	0,193	0,193	568,299	0,066	0,029586207
Welders	2022	26	50	Welders_2022_50	7,959	0,758	4,645	4,007	0,007	0,175	0,175	568,299	0,068	0,030482759
Welders	2022	51	120	Welders_2022_120	6,112	0,382	3,57	2,808	0,006	0,16	0,16	568,299	0,034	0,015241379
Welders	2022	121	175	Welders_2022_175	11,714	0,295	3,113	1,935	0,006	0,097	0,097	568,3	0,026	0,011655172
Welders	2022	176	250	Welders_2022_250	11,128	0,231	1,074	1,598	0,006	0,05	0,05	568,299	0,02	0,008965517
Welders	2022	251	500	Welders_2022_500	15,267	0,225	1,038	1,454	0,005	0,049	0,049	568,3	0,02	0,008965517
Welders	2023	6	15	Welders_2023_15	1,751	0,698	3,508	4,359	0,008	0,194	0,194	568,3	0,063	0,028241379
Welders	2023	16	25	Welders_2023_25	3,322	0,728	2,407	4,447	0,007	0,186	0,186	568,299	0,065	0,029137931
Welders	2023	26	50	Welders_2023_50	7,318	0,697	4,596	3,891	0,007	0,151	0,151	568,299	0,062	0,027793103
Welders	2023	51	120	Welders_2023_120	5,713	0,357	3,564	2,599	0,006	0,139	0,139	568,299	0,032	0,014344828
Welders	2023	121	175	Welders_2023_175	11,013	0,277	3,115	1,726	0,006	0,085	0,085	568,299	0,025	0,011206897
Welders	2023	176	250	Welders_2023_250	10,606	0,22	1,071	1,404	0,006	0,044	0,044	568,299	0,019	0,008517241
Welders	2023	251	500	Welders_2023_500	14,602	0,215	1,034	1,289	0,005	0,042	0,042	568,299	0,019	0,008517241
Welders	2024	6	15	Welders_2024_15	1,731	0,69	3,499	4,316	0,008	0,188	0,188	568,299	0,062	0,027793103
Welders	2024	16	25	Welders_2024_25	3,276	0,718	2,39	4,426	0,007	0,181	0,181	568,299	0,064	0,028689655
Welders	2024	26	50	Welders_2024_50	6,78	0,646	4,557	3,782	0,007	0,13	0,13	568,299	0,058	0,026
Welders	2024	51	120	Welders_2024_120	5,366	0,336	3,56	2,43	0,006	0,12	0,12	568,299	0,03	0,013448276
Welders	2024	121	175	Welders_2024_175	10,369	0,261	3,118	1,541	0,006	0,074	0,074	568,299	0,023	0,010310345
Welders	2024	176	250	Welders_2024_250	10,107	0,21	1,068	1,234	0,006	0,038	0,038	568,299	0,018	0,008068966
Welders	2024	251	500	Welders_2024_500	13,957	0,206	1,032	1,135	0,005	0,037	0,037	568,299	0,018	0,008068966
Welders	2025	6	15	Welders_2025_15	1,713	0,683	3,491	4,278	0,008	0,183	0,183	568,3	0,061	0,027344828
Welders	2025	16	25	Welders_2025_25	3,237	0,709	2,376	4,407	0,007	0,177	0,177	568,299	0,064	0,028689655
Welders	2025	26	50	Welders_2025_50	6,315	0,602	4,524	3,676	0,007	0,112	0,112	568,299	0,054	0,024206897
Welders	2025	51	120	Welders_2025_120	5,055	0,316	3,557	2,283	0,006	0,102	0,102	568,299	0,028	0,012551724
Welders	2025	121	175	Welders_2025_175	9,743	0,245	3,121	1,365	0,006	0,063	0,063	568,299	0,022	0,009862069
Welders	2025	176	250	Welders_2025_250	9,621	0,199	1,065	1,075	0,006	0,032	0,032	568,299	0,018	0,008068966
Welders	2025	251	500	Welders_2025_500	13,325	0,196	1,029	0,99	0,005	0,031	0,031	568,299	0,017	0,00762069
Welders	2030	6	15	Welders_2030_15	1,665	0,663	3,47	4,164	0,008	0,166	0,166	568,299	0,059	0,026448276
Welders	2030	16	25	Welders_2030_25	3,133	0,687	2,34	4,347	0,007	0,165	0,165	568,299	0,061	0,027344828
Welders	2030	26	50	Welders_2030_50	4,719	0,449	4,387	3,273	0,007	0,045	0,045	568,299	0,04	0,017931034
Welders	2030	51	120	Welders_2030_120	3,827	0,239	3,535	1,707	0,006	0,04	0,04	568,299	0,021	0,009413793
Welders	2030	121	175	Welders_2030_175	7,011	0,176	3,121	0,628	0,006	0,027	0,027	568,299	0,015	0,006724138
Welders	2030	176	250	Welders_2030_250	7,829	0,162	1,063	0,525	0,006	0,017	0,017	568,299	0,014	0,006275862
Welders	2030	251	500	Welders_2030_500	10,967	0,161	1,027	0,495	0,005	0,017	0,017	568,299	0,014	0,006275862
Welders	2035	6	15	Welders_2035_15	1,659	0,661	3,469	4,143	0,008	0,162	0,162	568,299	0,059	0,026448276
Welders	2035	16	25	Welders_2035_25	3,126	0,685	2,339	4,332	0,007	0,162	0,162	568,299	0,061	0,027344828
Welders	2035	26	50	Welders_2035_50	4,262	0,406	4,349	3,147	0,007	0,022	0,022	568,299	0,036	0,016137931
Welders	2035	51	120	Welders_2035_120	3,418	0,214	3,528	1,509	0,006	0,019	0,019	568,299	0,019	0,008517241
Welders	2035	121	175	Welders_2035_175	6,087	0,153	3,121	0,387	0,006	0,015	0,015	568,299	0,013	0,005827586
Welders	2035	176	250	Welders_2035_250	7,189	0,149	1,063	0,343	0,006	0,012	0,012	568,299	0,013	0,005827586
Welders	2035	251	500	Welders_2035_500	10,118	0,149	1,027	0,339	0,005	0,012	0,012	568,299	0,013	0,005827586
Welders	2040	6	15	Welders_2040_15	1,659	0,661	3,469	4,142	0,008	0,161	0,161	568,299	0,059	0,026448276
Welders	2040	16	25	Welders_2040_25	3,126	0,685	2,339	4,332	0,007	0,161	0,161	568,299	0,061	0,027344828
Welders	2040	26	50	Welders_2040_50	4,218	0,402	4,336	3,093	0,007	0,015	0,015	568,3	0,036	0,016137931
Welders	2040	51	120	Welders_2040_120	3,322	0,208	3,524	1,447	0,006	0,014	0,014	568,299	0,018	0,008068966
Welders	2040	121	175	Welders_2040_175	5,753	0,145	3,118	0,303	0,006	0,011	0,011	568,299	0,013	0,005827586
Welders	2040	176	250	Welders_2040_250	6,911	0,143	1,062	0,287	0,006	0,01	0,01	568,3	0,012	0,00537931
Welders	2040	251	500	Welders_2040_500	9,728	0,143	1,026	0,287	0,005	0,01	0,01	568,299	0,012	0,00537931

N_2O calculated based on CH_4/N_2O proportions values from:
https://www.theclimateregistry.org/wp-content/uploads/2018/06/The-Climate-Registry-2018-Default-Emission-Factor-Document.pdf
Table 13.7 U.S. Default Factors for Calculating CH_4 and N_2O Emissions from Non-Highway Vehicles
Construction/Mining Equipment

CH_4 (g/gallon)	N_2O (g/gallon)
0,58	0,26

WPWMA Landfill
GHG Emissions - Electricity Usage
Net Increase in 2050 from 2018 Baseline

Current baseline 2018 with escalation factor x 1.88 = **3 531 870 kWh**

Future Compost Electric Equipment

Equipment / Process Item	Model	Annual Ho	Hours/Yea	Days/Wee	Weeks/Ye	HP	kW	Annual Load
Shredder	Komptech 6200 Stat	5	1316	5	52	375	281	370078
Trommel _Pre-Screen	Vermeer 521	5	1316	5	52	120	90	118425
Sortline	Customized - Electri	5	1316	5	52	40	30	39475
Air Lift Separator	Komptech Hurrikan	5	1316	5	52	75	56	74016
Screening Plant Conveyors	Zipline Conveyor	5	1316	5	52	30	23	29606
Screening Plant Conveyors	Zipline Conveyor	2	520	5	52	30	23	11700
Screening Plant Conveyors	Zipline Conveyor	2	520	5	52	30	23	11700
Radial Stacker	Thor Stacker	4	962	5	52	50	38	36075
Trommel Screen_Finish Screen	Vermeer 521	4	955	5	52	120	90	85950
ASP Blowers	Daniels Model BI	19	6916	7	52	120	90	622440
ASP Blowers	Daniels Model BI	19	6916	7	52	120	90	622440
ASP Blowers	Daniels Model BI	19	6916	7	52	120	90	622440
ASP Blowers	Daniels Model BI	19	6916	7	52	120	90	622440
Building Blowers	Cincinnati	24	8736	7	52	60	45	393120
Building Blowers	Cincinnati	24	8736	7	52	60	45	393120
							KWH	**4053025**
							MWh	**4053,025**

Projected Future Escalation factor x 1.88

KWH	**10 692 900,00**
MWh	**10692,9**

PG&E GHG Intensity

CO2	203,983	lb/MWh
CH4	0,033	lb/MWh
N2O	0,004	lb/MWh

*Based on GHG intensity factors in CalEEMod.2020.4.0 for Pacific Gas and Electric

Summary of Electricity Emissions, Annual

MT/yr			
Total CO2	**CH4**	**N2O**	**CO2e**
989,363	0,160	0,019	998,986

Jacobs

WPWMA Landfill

Summary of Operational Emissions for Compatible Manufacturing

Plan Concept 1 and Plan Concept 2 - Full Buildout Year 2050

Summary of Compatible Manufacturing Emissions, Annual

	tons/yr							MT/yr					
Category	**ROG**	**NOx**	**CO**	**SO_X**	**PM_{10}**	**$PM_{2.5}$**	**dpm**	**Bio-CO2**	**NBio-CO2**	**Total CO2**	**CH4**	**N2O**	**CO2e**
Area	1,335	5,00E-05	5,48E-03	0,00E+00	2,00E-05	2,00E-05	0,00E+00	0,00E+00	0,011	0,011	0,000	0,000	0,011
Energy	0,021	0,192	0,161	0,001	0,015	0,015	0,000	0,000	933,981	933,981	0,037	0,011	938,064
Mobile	0,113	1,188	1,401	0,010	0,988	0,268	0,003	0,000	891,250	891,250	0,020	0,000	891,744
Waste	-	-	-	-	-	-	-	18,878	0,000	18,878	1,116	0,000	46,770
Water	-	-	-	-	-	-	-	19,289	95,707	114,996	1,986	0,048	178,841
Total	1,469	1,380	1,568	0,011	1,003	0,282	0,003	38,167	1 921	1 959	3,158	0,058	2 055

*Compatible manufacturing was modeled in CalEEMod, as 300,000 sq ft of manufacturing buildings and 300,000 sq ft of parking lot area.

Summary of Compatible Manufacturing Emissions, Daily

	lb/day						
Category	**ROG**	**NOx**	**CO**	**SO_X**	**PM_{10}**	**$PM_{2.5}$**	**dpm**
Area	7,317	5,50E-04	6,09E-02	0,00E+00	2,20E-04	2,20E-04	0,00E+00
Energy	0,116	1,053	0,884	0,006	0,080	0,080	0,000
Mobile	0,946	8,116	10,669	0,071	7,154	1,930	0,022
Total	8,4	9,2	11,6	0,1	7,2	2,0	0,0

*Compatible manufacturing was modeled in CalEEMod, as 300,000 sq ft of manufacturing buildings and 300,000 sq ft of parking lot area.

Based on summer daily CalEEMod results.

WPWMA EIR
Summary of Construction Emissions
Plan Concept 1

Summary of Construction Emissions by Year

	Maximum Daily Emissions (lb/day) - across all construction phases									
Year	TOG	ROG	CO	NO_X	SO_X	PM_{10}	$PM_{2.5}$	CO_2	CH_4	dpm
2024	19,784	3,6	72,7	8,9	0,2	5,6	7,6	14 952,512	4,835	0,252
2025	6,395	1,2	50,7	5,3	0,1	5,9	8,0	9 697,393	3,133	0,164
2028	9,301	2,0	76,2	8,7	0,2	3,1	4,2	15 872,857	5,137	0,268
2029	57,451	3,2	128,1	15,1	0,2	3,5	4,2	23 372,301	6,368	0,380
2033	55,136	1,7	42,8	5,3	0,1	1,1	1,3	10 823,029	0,444	0,152
C Mfg 1		2,304	8,250	4,649	0,021	0,536	0,226	1 971,771	0,068	0,044
C Mfg 2		2,304	8,250	4,649	0,021	0,536	0,226	1 971,771	0,068	0,044
C Mfg 3		2,304	8,250	4,649	0,021	0,536	0,226	1 971,771	0,068	0,044
C Mfg 4		2,304	8,250	4,649	0,021	0,536	0,226	1 971,771	0,068	0,044
C Mfg 5		2,304	8,250	4,649	0,021	0,536	0,226	1 971,771	0,068	0,044

*Compatible manufacturing is assumed to be constructed over 5 years, so emissions will occur equally for a 5-year period.

Off-Road and On-Road Emissions by Year

	Maximum Daily Emissions (lb/day) - across all construction phases																			
	Off-Road Emissions (Exhaust and Fugitive)										On-Road Emissions (Exhaust and Fugitive)									
Year	TOG	ROG	CO	NO_X	SO_X	PM_{10}	$PM_{2.5}$	CO_2	CH_4	dpm	TOG	ROG	CO	NO_X	SO_X	PM_{10}	$PM_{2.5}$	CO_2	CH_4	dpm
2024	19,784	3,596	72,662	8,922	0,158	5,596	7,630	14 952,512	4,835	0,252	0,000	0,000	0,000	0,000	0,000	0,000	0,000	0,000	0,000	0,000
2025	6,395	1,227	50,691	5,318	0,102	5,863	8,033	9 697,393	3,133	0,164	0,000	0,000	0,000	0,000	0,000	0,000	0,000	0,000	0,000	0,000
2028	9,301	2,012	76,152	8,719	0,168	3,118	4,203	15 872,857	5,137	0,268	0,000	0,000	0,000	0,000	0,000	0,000	0,000	0,000	0,000	0,000
2029	57,451	3,178	128,144	15,077	0,248	3,509	4,194	23 372,301	6,368	0,380	0,000	0,000	0,000	0,000	0,000	0,000	0,000	0,000	0,000	0,000
2033	55,136	1,667	42,848	5,257	0,099	1,135	1,323	10 823,029	0,444	0,152	0,000	0,000	0,000	0,000	0,000	0,000	0,000	0,000	0,000	0,000

WPWMA EIR

Summary of Construction Emissions

Plan Concept 1

Off-Road Emissions by Element		Maximum Daily Emissions (lb/day) - across all construction phases											
		Exhaust Emissions									Fugitive Emissions (Uncontrolled)		
Element	**Year**	**TOG**	**ROG**	**CO**	**NO_X**	**SO_X**	**PM_{10}**	**$PM_{2.5}$**	**CO_2**	**CH_4**	**PM_{10}**	**$PM_{2.5}$**	**ROG**
Public Area	2024	13,731	0,762	29,822	3,712	0,063	0,102	0,102	6 009,754	1,943	2,850	3,935	1,179
Public Area - SW Pond	2024	2,368	0,461	17,084	1,996	0,038	0,061	0,061	3 638,437	1,177	0,831	1,148	0,000
Western Entrance	2024	1,317	0,211	8,671	1,218	0,018	0,028	0,028	1 665,884	0,538	0,831	1,148	0,524
Shared Site Utilities	2024	2,368	0,461	17,084	1,996	0,038	0,061	0,061	3 638,437	1,177	0,831	1,148	0,000
Compost Facility	2025	3,453	0,762	29,822	3,300	0,063	0,102	0,102	6 008,286	1,943	2,850	3,935	0,000
Compost Facility - SW Pond	2025	2,943	0,466	20,869	2,017	0,039	0,062	0,062	3 689,107	1,190	2,850	3,935	0,000
Landfill Construction	2028	9,301	2,012	76,152	8,719	0,168	0,268	0,268	15 872,857	5,137	2,850	3,935	0,000
Landfill Lining & Partial Closure	2029	41,338	2,483	107,169	10,760	0,214	0,331	0,331	20 221,026	5,473	1,900	2,623	0,000
Recovered Materials Storage	2029	12,809	0,293	13,124	3,712	0,022	0,030	0,030	2 002,154	0,538	0,831	1,148	0,262
HHW Storage	2029	3,303	0,140	7,851	0,605	0,012	0,019	0,019	1 149,120	0,357	0,398	0,043	0,000
Primary Maintenance Facility	2033	13,239	0,211	8,671	1,218	0,021	0,028	0,028	1 994,695	0,087	0,831	1,148	0,524
Stockpile Relocation	2033	41,897	0,932	34,176	4,039	0,078	0,124	0,124	8 828,335	0,357	0,152	0,023	0,000

On-Road Emissions by Element		Maximum Daily Emissions (lb/day) - across all construction phases											
		Exhaust Emissions										Fugitive Emissions	
Element	**Year**	**TOG**	**ROG**	**CO**	**NO_X**	**SO_X**	**PM_{10}**	**$PM_{2.5}$**	**CO_2**	**CH_4**	**N_2O**	**PM_{10}**	**$PM_{2.5}$**
Public Area	2024	0,000	0,000	0,000	0,000	0,000	0,000	0,000	0,000	0,000	0,000	0,000	0,000
Public Area - SW Pond	2024	0,000	0,000	0,000	0,000	0,000	0,000	0,000	0,000	0,000	0,000	0,000	0,000
Western Entrance	2024	0,000	0,000	0,000	0,000	0,000	0,000	0,000	0,000	0,000	0,000	0,000	0,000
Shared Site Utilities	2024	0,000	0,000	0,000	0,000	0,000	0,000	0,000	0,000	0,000	0,000	0,000	0,000
Compost Facility	2025	0,000	0,000	0,000	0,000	0,000	0,000	0,000	0,000	0,000	0,000	0,000	0,000
Compost Facility - SW Pond	2025	0,000	0,000	0,000	0,000	0,000	0,000	0,000	0,000	0,000	0,000	0,000	0,000
Landfill Construction	2028	0,000	0,000	0,000	0,000	0,000	0,000	0,000	0,000	0,000	0,000	0,000	0,000
Landfill Lining & Partial Closure	2029	0,000	0,000	0,000	0,000	0,000	0,000	0,000	0,000	0,000	0,000	0,000	0,000
Recovered Materials Storage	2029	0,000	0,000	0,000	0,000	0,000	0,000	0,000	0,000	0,000	0,000	0,000	0,000
HHW Storage	2029	0,000	0,000	0,000	0,000	0,000	0,000	0,000	0,000	0,000	0,000	0,000	0,000
Primary Maintenance Facility	2033	0,000	0,000	0,000	0,000	0,000	0,000	0,000	0,000	0,000	0,000	0,000	0,000
Stockpile Relocation	2033	0,000	0,000	0,000	0,000	0,000	0,000	0,000	0,000	0,000	0,000	0,000	0,000

WPWMA EIR
Summary of Construction Emissions
Plan Concept 2

Summary of Construction Emissions by Year

	Maximum Daily Emissions (lb/day) - across all construction phases									
Year	TOG	ROG	CO	NO_X	SO_X	PM_{10}	$PM_{2.5}$	CO_2	CH_4	dpm
2024	18,0	3,5	114,5	13,1	0,2	12,5	15,8	23 286,495	7,529	0,393
2026	20,2	3,5	89,3	10,4	0,2	19,9	27,4	18 256,078	5,906	0,308
2031	9,3	2,0	76,2	8,7	0,2	8,8	12,1	15 872,857	5,137	0,268
2032	157,3	3,9	145,2	17,7	0,3	11,0	12,0	31 356,526	1,196	0,441
C Mfg 1		2,304	8,250	4,649	0,021	0,536	0,226	1 971,771	0,068	0,044
C Mfg 2		2,304	8,250	4,649	0,021	0,536	0,226	1 971,771	0,068	0,044
C Mfg 3		2,304	8,250	4,649	0,021	0,536	0,226	1 971,771	0,068	0,044
C Mfg 4		2,304	8,250	4,649	0,021	0,536	0,226	1 971,771	0,068	0,044
C Mfg 5		2,304	8,250	4,649	0,021	0,536	0,226	1 971,771	0,068	0,044

*Compatible manufacturing is assumed to be constructed over 5 years, so emissions will occur equally for a 5-year period.

Off-Road and On-Road Emissions by Year

	Maximum Daily Emissions (lb/day) - across all construction phases																			
	Off-Road Emissions (Exhaust and Fugitive)										On-Road Emissions (Exhaust and Fugitive)									
Year	TOG	ROG	CO	NO_X	SO_X	PM_{10}	$PM_{2.5}$	CO_2	CH_4	dpm	TOG	ROG	CO	NO_X	SO_X	PM_{10}	$PM_{2.5}$	CO_2	CH_4	dpm
2024	18,019	3,474	114,484	13,088	0,246	12,479	15,798	23 286,495	7,529	0,393	0,000	0,000	0,000	0,000	0,000	0,000	0,000	0,000	0,000	0,000
2026	20,212	3,493	89,261	10,437	0,193	19,901	27,360	18 256,078	5,906	0,308	0,000	0,000	0,000	0,000	0,000	0,000	0,000	0,000	0,000	0,000
2031	9,301	2,012	76,152	8,719	0,168	8,818	12,073	15 872,857	5,137	0,268	0,000	0,000	0,000	0,000	0,000	0,000	0,000	0,000	0,000	0,000
2032	157,347	3,905	145,228	17,686	0,304	11,021	12,012	31 356,526	1,196	0,441	0,000	0,000	0,000	0,000	0,000	0,000	0,000	0,000	0,000	0,000

WPWMA EIR

Summary of Construction Emissions

Plan Concept 2

Off-Road Emissions by Element

		Maximum Daily Emissions (lb/day) - across all construction phases											
		Exhaust Emissions									Fugitive Emissions (Uncontrolled)		
Element	**Year**	**TOG**	**ROG**	**CO**	**NO_X**	**SO_X**	**PM_{10}**	**$PM_{2.5}$**	**CO_2**	**CH_4**	**PM_{10}**	**$PM_{2.5}$**	**ROG**
Main Entrance	2024	3,513	0,211	8,671	1,218	0,018	0,028	0,028	1 665,884	0,538	2,494	3,443	0,524
New SW Ponds	2024	3,167	0,466	20,869	2,017	0,039	0,062	0,062	3 688,013	1,190	0,815	0,123	0,000
Unlined Area Excavation (1 of 3)	2024	6,816	1,341	50,768	5,813	0,112	0,179	0,179	10 587,101	3,425	8,549	11,804	0,000
Stockpile Relocation	2024	4,523	0,932	34,176	4,039	0,078	0,124	0,124	7 345,497	2,377	0,228	0,034	0,000
Public Area	2026	12,809	0,762	29,822	3,712	0,063	0,102	0,102	6 008,286	1,943	8,549	11,804	1,179
Public Area - SW Pond	2026	1,202	0,211	8,671	0,913	0,018	0,028	0,028	1 665,887	0,538	2,494	3,443	0,000
Unlined Area Excavation (3 of 3)	2026	6,201	1,341	50,768	5,813	0,112	0,179	0,179	10 581,904	3,425	8,549	11,804	0,000
Landfill Construction	2031	9,301	2,012	76,152	8,719	0,168	0,268	0,268	15 872,857	5,137	8,549	11,804	0,000
Landfill Lining & Partial Closure	2032	118,673	2,483	107,169	10,760	0,226	0,331	0,331	23 519,023	0,856	5,700	7,870	0,000
Admin Building	2032	9,314	0,144	7,851	1,218	0,014	0,019	0,019	1 322,797	0,064	1,193	0,129	0,262
Recovered Materials Storage	2032	13,239	0,293	13,124	3,712	0,024	0,030	0,030	2 152,658	0,096	2,494	3,443	0,262
Shared Site Utilities	2032	16,121	0,461	17,084	1,996	0,040	0,061	0,061	4 362,047	0,178	1,193	0,129	0,000

On-Road Emissions by Element

		Maximum Daily Emissions (lb/day) - across all construction phases											
		Exhaust Emissions										Fugitive Emissions	
Element	**Year**	**TOG**	**ROG**	**CO**	**NO_X**	**SO_X**	**PM_{10}**	**$PM_{2.5}$**	**CO_2**	**CH_4**	**N_2O**	**PM_{10}**	**$PM_{2.5}$**
Main Entrance	2024	0,000	0,000	0,000	0,000	0,000	0,000	0,000	0,000	0,000	0,000	0,000	0,000
New SW Ponds	2024	0,000	0,000	0,000	0,000	0,000	0,000	0,000	0,000	0,000	0,000	0,000	0,000
Unlined Area Excavation (1 of 3)	2024	0,000	0,000	0,000	0,000	0,000	0,000	0,000	0,000	0,000	0,000	0,000	0,000
Stockpile Relocation	2024	0,000	0,000	0,000	0,000	0,000	0,000	0,000	0,000	0,000	0,000	0,000	0,000
Public Area	2026	0,000	0,000	0,000	0,000	0,000	0,000	0,000	0,000	0,000	0,000	0,000	0,000
Public Area - SW Pond	2026	0,000	0,000	0,000	0,000	0,000	0,000	0,000	0,000	0,000	0,000	0,000	0,000
Unlined Area Excavation (3 of 3)	2026	0,000	0,000	0,000	0,000	0,000	0,000	0,000	0,000	0,000	0,000	0,000	0,000
Landfill Construction	2031	0,000	0,000	0,000	0,000	0,000	0,000	0,000	0,000	0,000	0,000	0,000	0,000
Landfill Lining & Partial Closure	2032	0,000	0,000	0,000	0,000	0,000	0,000	0,000	0,000	0,000	0,000	0,000	0,000
Admin Building	2032	0,000	0,000	0,000	0,000	0,000	0,000	0,000	0,000	0,000	0,000	0,000	0,000
Recovered Materials Storage	2032	0,000	0,000	0,000	0,000	0,000	0,000	0,000	0,000	0,000	0,000	0,000	0,000
Shared Site Utilities	2032	0,000	0,000	0,000	0,000	0,000	0,000	0,000	0,000	0,000	0,000	0,000	0,000

WPWMA EIR

Summary of Annual GHG Construction Emissions

Plan Concept 1

Summary of Construction Emissions by Year

				Annual (MT/yr)
Year	**CO_2**	**CH_4**	**N_2O**	**CO_2e**
2024	350	0,08	0,00	353
2025	432	0,14	0,00	436
2028	1 358	0,44	0,00	1 371
2029	1 946	0,51	0,00	1 961
2033	1 181	0,05	0,00	1 182
C Mfg (1 year)*	326	0,01	0	327
Max Annual	**1 946**	**0,51**	**0**	**1 961**

*Compatible manufacturing is assumed to be constructed over 5 years, so emissions will occur equally for a 5-year period.

WPWMA EIR

Summary of Annual GHG Construction Emissions

Plan Concept 2

Summary of Construction Emissions by Year

				Annual (MT/yr)
Year	**CO_2**	**CH_4**	**N_2O**	**CO_2e**
2024	1 500	0,48	0,00	1 514
2026	932	0,27	0,00	939
2031	1 358	0,44	0,00	1 371
2032	2 267	0,09	0,00	2 269
C Mfg (1 year)*	326	0,01	0	327
Max Annual	**2 267**	**0,48**	**0**	**2 269**

*Compatible manufacturing is assumed to be constructed over 5 years, so emissions will occur equally for a 5-year period.

WPWMA EIR
Summary of Construction Phase Information
Plan Concept 1

Number of Equipment

		Number of Equipment Used in Construction Phase									
Element	**Year**	**Demolition**	**Site Preparation**	**Grading**	**Building Construction**	**Paving - Asphalt**	**Paving - Concrete**	**Site Preparation - Pond**	**Excavation**	**Lining and Partial Closure**	**Stockpile Movement**
Public Area	2024	0	7	8	7	8	5	N/A	N/A	N/A	N/A
Public Area - SW Pond	2024	N/A	N/A	N/A	N/A	N/A	N/A	3	4	N/A	N/A
Western Entrance	2024	0	3	3	0	5	7	0	0	N/A	N/A
Shared Site Utilities	2024	0	3	3	0	0	0	0	4	N/A	N/A
Compost Facility	2025	0	7	8	5	0	6	N/A	N/A	N/A	N/A
Compost Facility - SW Pond	2025	N/A	N/A	N/A	N/A	N/A	N/A	7	4	N/A	N/A
Landfill Construction	2028	0	7	8	0	0	0	0	24	N/A	N/A
Landfill Lining & Partial Closure	2029	0	0	0	0	0	0	0	4	44	N/A
Recovered Materials Storage	2029	0	3	3	7	7	5	0	0	N/A	N/A
HHW Storage	2029	0	2	4	5	0	0	0	0	N/A	N/A
Primary Maintenance Facility	2033	0	3	3	5	5	7	0	0	N/A	N/A
Stockpile Relocation	2033	0	0	0	0	0	0	0	0	N/A	5

Daily Equipment-Hours

		Number of Equipment-Hours per Day									
Element	**Year**	**Demolition**	**Site Preparation**	**Grading**	**Building Construction**	**Paving - Asphalt**	**Paving - Concrete**	**Site Preparation - Pond**	**Excavation**	**Lining and Partial Closure**	**Stockpile Movement**
Public Area	2024	0	56	64	50	52	35	N/A	N/A	N/A	N/A
Public Area - SW Pond	2024	N/A	N/A	N/A	N/A	N/A	N/A	23	26	N/A	N/A
Western Entrance	2024	0	23	19	0	35	45	0	0	N/A	N/A
Shared Site Utilities	2024	0	23	19	0	0	0	0	26	N/A	N/A
Compost Facility	2025	0	56	64	32	0	48	N/A	N/A	N/A	N/A
Compost Facility - SW Pond	2025	N/A	N/A	N/A	N/A	N/A	N/A	56	26	N/A	N/A
Landfill Construction	2028	0	56	64	0	0	0	0	120	N/A	N/A
Landfill Lining & Partial Closure	2029	0	0	0	0	0	0	0	26	216	N/A
Recovered Materials Storage	2029	0	23	19	50	45	35	0	0	N/A	N/A
HHW Storage	2029	0	16	21	32	0	0	0	0	N/A	N/A
Primary Maintenance Facility	2033	0	23	19	32	35	45	0	0	N/A	N/A
Stockpile Relocation	2033	0	0	0	0	0	0	0	0	N/A	40

Annual Days Equipment Used

		Number of Days Equipment Used (equivalent to Duration of Construction Phase)									
Element	**Year**	**Demolition**	**Site Preparation**	**Grading**	**Building Construction**	**Paving - Asphalt**	**Paving - Concrete**	**Site Preparation - Pond**	**Excavation**	**Lining and Partial Closure**	**Stockpile Movement**
Public Area	2024	0	10	30	220	20	10	N/A	N/A	N/A	N/A
Public Area - SW Pond	2024	N/A	N/A	N/A	N/A	N/A	N/A	3	1	N/A	N/A
Western Entrance	2024	0	3	6	0	10	10	0	0	N/A	N/A
Shared Site Utilities	2024	0	3	6	0	0	0	0	2	N/A	N/A
Compost Facility	2025	0	30	75	200	0	55	N/A	N/A	N/A	N/A
Compost Facility - SW Pond	2025	N/A	N/A	N/A	N/A	N/A	N/A	10	3	N/A	N/A
Landfill Construction	2028	0	10	30	0	0	0	0	175	N/A	N/A
Landfill Lining & Partial Closure	2029	0	0	0	0	0	0	0	13	175	N/A
Recovered Materials Storage	2029	0	3	6	220	10	10	0	0	N/A	N/A
HHW Storage	2029	0	2	4	200	0	0	0	0	N/A	N/A
Primary Maintenance Facility	2033	0	3	6	200	10	10	0	0	N/A	N/A
Stockpile Relocation	2033	0	0	0	0	0	0	0	0	N/A	260

WPWMA EIR
Summary of Construction Phase Information
Plan Concept 2

Number of Equipment

		Number of Equipment Used in Construction Phase									
Element	**Year**	**Demolition**	**Site Preparation**	**Grading**	**Building Construction**	**Paving - Asphalt**	**Paving - Concrete**	**Site Preparation - Pond**	**Excavation**	**Lining and Partial Closure**	**Stockpile Movement**
Main Entrance	2024	4	3	3	0	5	7	0	0	N/A	N/A
New SW Ponds	2024	0	0	0	0	0	0	7	4	N/A	N/A
Unlined Area Excavation (1 of 3)	2024	0	7	0	0	0	0	0	16	N/A	N/A
Stockpile Relocation	2024	0	0	0	0	0	0	0	0	N/A	5
Public Area	2026	6	7	8	7	8	5	N/A	N/A	N/A	N/A
Public Area - SW Pond	2026	N/A	N/A	N/A	N/A	N/A	N/A	3	4	N/A	N/A
Unlined Area Excavation (3 of 3)	2026	0	7	0	0	0	0	0	16	N/A	N/A
Landfill Construction	2031	0	7	8	0	0	0	0	24	N/A	N/A
Landfill Lining & Partial Closure	2032	0	0	0	0	0	0	0	4	44	N/A
Admin Building	2032	0	2	4	5	7	7	0	0	N/A	N/A
Recovered Materials Storage	2032	0	3	3	7	7	5	0	0	N/A	N/A
Shared Site Utilities	2032	0	2	4	0	0	0	0	4	N/A	N/A

Daily Equipment-Hours

		Number of Equipment-Hours per Day									
Element	**Year**	**Demolition**	**Site Preparation**	**Grading**	**Building Construction**	**Paving - Asphalt**	**Paving - Concrete**	**Site Preparation - Pond**	**Excavation**	**Lining and Partial Closure**	**Stockpile Movement**
Main Entrance	2024	21	23	19	0	35	45	0	0	N/A	N/A
New SW Ponds	2024	0	0	0	0	0	0	56	26	N/A	N/A
Unlined Area Excavation (1 of 3)	2024	0	56	0	0	0	0	0	80	N/A	N/A
Stockpile Relocation	2024	0	0	0	0	0	0	0	0	N/A	40
Public Area	2026	48	56	64	50	52	35	N/A	N/A	N/A	N/A
Public Area - SW Pond	2026	N/A	N/A	N/A	N/A	N/A	N/A	23	26	N/A	N/A
Unlined Area Excavation (3 of 3)	2026	0	56	0	0	0	0	0	80	N/A	N/A
Landfill Construction	2031	0	56	64	0	0	0	0	120	N/A	N/A
Landfill Lining & Partial Closure	2032	0	0	0	0	0	0	0	26	216	N/A
Admin Building	2032	0	16	21	32	45	45	0	0	N/A	N/A
Recovered Materials Storage	2032	0	23	19	50	45	35	0	0	N/A	N/A
Shared Site Utilities	2032	0	16	21	0	0	0	0	26	N/A	N/A

Annual Days Equipment Used

		Number of Days Equipment Used (equivalent to Duration of Construction Phase)									
Element	**Year**	**Demolition**	**Site Preparation**	**Grading**	**Building Construction**	**Paving - Asphalt**	**Paving - Concrete**	**Site Preparation - Pond**	**Excavation**	**Lining and Partial Closure**	**Stockpile Movement**
Main Entrance	2024	20	3	6	0	10	10	0	0	N/A	N/A
New SW Ponds	2024	0	0	0	0	0	0	10	10	N/A	N/A
Unlined Area Excavation (1 of 3)	2024	0	10	0	0	0	0	0	116	N/A	N/A
Stockpile Relocation	2024	0	0	0	0	0	0	0	0	N/A	260
Public Area	2026	20	10	30	220	20	10	N/A	N/A	N/A	N/A
Public Area - SW Pond	2026	N/A	N/A	N/A	N/A	N/A	N/A	3	1	N/A	N/A
Unlined Area Excavation (3 of 3)	2026	0	10	0	0	0	0	0	116	N/A	N/A
Landfill Construction	2031	0	10	30	0	0	0	0	175	N/A	N/A
Landfill Lining & Partial Closure	2032	0	0	0	0	0	0	0	13	175	N/A
Admin Building	2032	0	2	4	200	10	10	0	0	N/A	N/A
Recovered Materials Storage	2032	0	3	6	220	10	10	0	0	N/A	N/A
Shared Site Utilities	2032	0	2	4	0	0	0	0	1	N/A	N/A

WPWMA Construction Project Schedule

Last Updated 20.02.2020

- = Critical Element Initial Build
- = Necessary Supporting Element
- = Existing Feature to be Removed
- = Replacement
- = Candidate Peak Year

Plan Concept 1 (CEQA Schedule)

Project El	2021												2022												2023												2024											
	J	F	M	A	M	J	J	A	S	O	N	D	J	F	M	A	M	J	J	A	S	O	N	D	J	F	M	A	M	J	J	A	S	O	N	D	J	F	M	A	M	J	J	A	S	O	N	D
Public Area																																					1	1	1	1	1	1	1	1	1	1	1	1
C&D Facility																																																
Composting																																																
Landfill - Module Construction																									0	0	0	0	0	0	0	0	0	0	0	0												
Landfill - Unlined Area Excavation/Backfill																																																
Landfill - Stockpile Relocation																																																
Landfill - Module Closure																																																
Admin																																																
Main Entrance																																																
Western Entrance																																					1	1	1	1	1	1	1	1	1	1	1	1
Overpass																																																
Recovered Materials Storage																																																
Primary Maintenance Facility																																																
Satellite Maintenance and Staff Facility																																																
Stormwater Pond																																					1	1	1	1	1	1	1	1	1	1	1	1
Main Site HHW Facility																																																
Compost Pond Removal																																																
Site Utilities																																					1	1	1	1	1	1	1	1	1	1	1	1
MRF Upgrade to TS																																																
Compatible/Programmatic Facilities																																																
Flare																																																

Project El	2025												2026												2027												2028											
	J	F	M	A	M	J	J	A	S	O	N	D	J	F	M	A	M	J	J	A	S	O	N	D	J	F	M	A	M	J	J	A	S	O	N	D	J	F	M	A	M	J	J	A	S	O	N	D
Public Area																																																
C&D Facility																																																
Composting	1	1	1	1	1	1	1	1	1	1	1	1													1	1	1	1	1	1	1	1	1	1	1	1												
Landfill - Module Construction																																					1	1	1	1	1	1	1	1	1	1	1	1
Landfill - Unlined Area Excavation/Backfill																																																
Landfill - Stockpile Relocation																																																
Landfill - Module Closure																																																
Admin																									1	1	1	1	1	1	1	1	1	1	1	1												
Main Entrance																																																
Western Entrance																																																
Overpass																																																
Recovered Materials Storage																																																
Primary Maintenance Facility																																																
Satellite Maintenance and Staff Facility													1	1	1	1	1	1	1	1	1	1	1	1																								
Stormwater Pond																																																
Main Site HHW Facility																																																
Compost Pond Removal																																																
Site Utilities																																																
MRF Upgrade to TS																																																
Compatible/Programmatic Facilities																																																
Flare																																																

Plan Concept 2 (CEQA Schedule)

Project El	2021												2022												2023												2024											
	J	F	M	A	M	J	J	A	S	O	N	D	J	F	M	A	M	J	J	A	S	O	N	D	J	F	M	A	M	J	J	A	S	O	N	D	J	F	M	A	M	J	J	A	S	O	N	D
Public Area																																																
C&D Facility																																																
Composting																																																
Landfill - Module Construction																									0	0	0	0	0	0	0	0	0	0	0	0												
Landfill - Unlined Area Excavation/Backfill																																					1	1	1	1	1	1	1	1	1	1	1	1
Landfill - Stockpile Relocation																																					1	1	1	1	1	1	1	1	1	1	1	1
Landfill - Module Closure																																																
Admin																																																
Main Entrance																																					1	1	1	1	1	1	1	1	1	1	1	1
Western Entrance																																																
Overpass																																																
Recovered Materials Storage																																																
Primary Maintenance Facility																																																
Satellite Maintenance and Staff Facility																																																
Stormwater Pond																																					1	1	1	1	1	1	1	1	1	1	1	1
Main Site HHW Facility																																																
Compost Pond Removal																																																
Site Utilities																																																
MRF Upgrade to TS																																																
Compatible/Programmatic Facilities																																																
Flare																																																

Project El	2025												2026												2027												2028											
	J	F	M	A	M	J	J	A	S	O	N	D	J	F	M	A	M	J	J	A	S	O	N	D	J	F	M	A	M	J	J	A	S	O	N	D	J	F	M	A	M	J	J	A	S	O	N	D
Public Area													1	1	1	1	1	1	1	1	1	1	1	1																								
C&D Facility																									1	1	1	1	1	1	1	1	1	1	1	1												
Composting																																					1	1	1	1	1	1	1	1	1	1	1	1
Landfill - Module Construction																									1	1	1	1	1	1	1	1	1	1	1	1												
Landfill - Unlined Area Excavation/Backfill	1	1	1	1	1	1	1	1	1	1	1	1	1	1	1	1	1	1	1	1	1	1	1	1																								
Landfill - Stockpile Relocation																																																
Landfill - Module Closure																																																
Admin																																																
Main Entrance																																																
Western Entrance																																																
Overpass																																																
Recovered Materials Storage																																																
Primary Maintenance Facility																																																
Satellite Maintenance and Staff Facility																																																
Stormwater Pond													1	1	1	1	1	1	1	1	1	1	1	1	1	1	1	1	1	1	1	1	1	1	1	1												
Main Site HHW Facility																																																
Compost Pond Removal	1	1	1	1	1	1	1	1	1	1	1	1																																				
Site Utilities																																																
MRF Upgrade to TS																																																
Compatible/Programmatic Facilities																																																
Flare																																																

WPWMA Construction Project Schedule

Last Updated 20.02.2020

= Critical Element Initial Build

= Necessary Supporting Element

= Existing Feature to be Removed

= Replacement

= Candidate Peak Year

Plan Concept 1 (CEQA Schedule)

Project El	2029												2030											
	J	F	M	A	M	J	J	A	S	O	N	D	J	F	M	A	M	J	J	A	S	O	N	D
Public Area																								
C&D Facility													1	1	1	1	1	1	1	1	1	1	1	1
Composting																								
Landfill - Module Construction																								
Landfill - Unlined Area Excavation/Backfill																								
Landfill - Stockpile Relocation																								
Landfill - Module Closure	1	1	1	1	1	1	1	1	1	1	1	1												
Admin																								
Main Entrance																								
Western Entrance																								
Overpass																								
Recovered Materials Storage	1	1	1	1	1	1	1	1	1	1	1	1												
Primary Maintenance Facility																								
Satellite Maintenance and Staff Facility																								
Stormwater Pond													1	1	1	1	1	1	1	1	1	1	1	1
Main Site HHW Facility	1	1	1	1	1	1	1	1	1	1	1	1												
Compost Pond Removal																								
Site Utilities																								
MRF Upgrade to TS																								
Compatible/Programmatic Facilities																								
Flare																								

Project El	2031												2032											
	J	F	M	A	M	J	J	A	S	O	N	D	J	F	M	A	M	J	J	A	S	O	N	D
Public Area																								
C&D Facility																								
Composting													1	1	1	1	1	1	1	1	1	1	1	1
Landfill - Module Construction																								
Landfill - Unlined Area Excavation/Backfill																								
Landfill - Stockpile Relocation																								
Landfill - Module Closure																								
Admin																								
Main Entrance	1	1	1	1	1	1	1	1	1	1	1	1												
Western Entrance																								
Overpass																								
Recovered Materials Storage																								
Primary Maintenance Facility																								
Satellite Maintenance and Staff Facility																								
Stormwater Pond	1	1	1	1	1	1	1	1	1	1	1	1												
Main Site HHW Facility																								
Compost Pond Removal	1	1	1	1	1	1	1	1	1	1	1	1												
Site Utilities																								
MRF Upgrade to TS																								
Compatible/Programmatic Facilities																								
Flare																								

Project El	2033												2034											
	J	F	M	A	M	J	J	A	S	O	N	D	J	F	M	A	M	J	J	A	S	O	N	D
Public Area																								
C&D Facility																								
Composting	1	1	1	1	1	1	1	1	1	1	1	1												
Landfill - Module Construction																								
Landfill - Unlined Area Excavation/Backfill																								
Landfill - Stockpile Relocation	1	1	1	1	1	1	1	1	1	1	1	1												
Landfill - Module Closure																								
Admin																								
Main Entrance																								
Western Entrance													1	1	1	1	1	1	1	1	1	1	1	1
Overpass													1	1	1	1	1	1	1	1	1	1	1	1
Recovered Materials Storage																								
Primary Maintenance Facility	1	1	1	1	1	1	1	1	1	1	1	1												
Satellite Maintenance and Staff Facility																								
Stormwater Pond																								
Main Site HHW Facility																								
Compost Pond Removal																								
Site Utilities																								
MRF Upgrade to TS																								
Compatible/Programmatic Facilities																								
Flare																								

Project El	2035												2036											
	J	F	M	A	M	J	J	A	S	O	N	D	J	F	M	A	M	J	J	A	S	O	N	D
Public Area																								
C&D Facility																								
Composting																								
Landfill - Module Construction	1	1	1	1	1	1	1	1	1	1	1	1												
Landfill - Unlined Area Excavation/Backfill																								
Landfill - Stockpile Relocation																								
Landfill - Module Closure													1	1	1	1	1	1	1	1	1	1	1	1
Admin																								
Main Entrance																								
Western Entrance																								
Overpass																								
Recovered Materials Storage																								
Primary Maintenance Facility																								
Satellite Maintenance and Staff Facility																								
Stormwater Pond																								
Main Site HHW Facility																								
Compost Pond Removal																								
Site Utilities																								
MRF Upgrade to TS																								
Compatible/Programmatic Facilities																								
Flare																								

Plan Concept 2 (CEQA Schedule)

Project El	2029												2030											
	J	F	M	A	M	J	J	A	S	O	N	D	J	F	M	A	M	J	J	A	S	O	N	D
Public Area																								
C&D Facility																								
Composting																								
Landfill - Module Construction																								
Landfill - Unlined Area Excavation/Backfill																								
Landfill - Stockpile Relocation													1	1	1	1	1	1	1	1	1	1	1	1
Landfill - Module Closure																								
Admin																								
Main Entrance	1	1	1	1	1	1	1	1	1	1	1	1												
Western Entrance																								
Overpass																								
Recovered Materials Storage																								
Primary Maintenance Facility	1	1	1	1	1	1	1	1	1	1	1	1												
Satellite Maintenance and Staff Facility																								
Stormwater Pond													1	1	1	1	1	1	1	1	1	1	1	1
Main Site HHW Facility																								
Compost Pond Removal																								
Site Utilities																								
MRF Upgrade to TS																								
Compatible/Programmatic Facilities																								
Flare																								

Project El	2031												2032											
	J	F	M	A	M	J	J	A	S	O	N	D	J	F	M	A	M	J	J	A	S	O	N	D
Public Area																								
C&D Facility																								
Composting													1	1	1	1	1	1	1	1	1	1	1	1
Landfill - Module Construction	1	1	1	1	1	1	1	1	1	1	1	1												
Landfill - Unlined Area Excavation/Backfill																								
Landfill - Stockpile Relocation																								
Landfill - Module Closure													1	1	1	1	1	1	1	1	1	1	1	1
Admin													1	1	1	1	1	1	1	1	1	1	1	1
Main Entrance																								
Western Entrance																								
Overpass																								
Recovered Materials Storage													1	1	1	1	1	1	1	1	1	1	1	1
Primary Maintenance Facility																								
Satellite Maintenance and Staff Facility																								
Stormwater Pond																								
Main Site HHW Facility																								
Compost Pond Removal																								
Site Utilities													1	1	1	1	1	1	1	1	1	1	1	1
MRF Upgrade to TS																								
Compatible/Programmatic Facilities																								
Flare																								

Project El	2033												2034											
	J	F	M	A	M	J	J	A	S	O	N	D	J	F	M	A	M	J	J	A	S	O	N	D
Public Area																								
C&D Facility																								
Composting	1	1	1	1	1	1	1	1	1	1	1	1												
Landfill - Module Construction																								
Landfill - Unlined Area Excavation/Backfill																								
Landfill - Stockpile Relocation													1	1	1	1	1	1	1	1	1	1	1	1
Landfill - Module Closure																								
Admin																								
Main Entrance																								
Western Entrance																								
Overpass																								
Recovered Materials Storage																								
Primary Maintenance Facility																								
Satellite Maintenance and Staff Facility																								
Stormwater Pond																								
Main Site HHW Facility																								
Compost Pond Removal																								
Site Utilities																								
MRF Upgrade to TS																								
Compatible/Programmatic Facilities																								
Flare																								

Project El	2035												2036											
	J	F	M	A	M	J	J	A	S	O	N	D	J	F	M	A	M	J	J	A	S	O	N	D
Public Area																								
C&D Facility																								
Composting																								
Landfill - Module Construction													1	1	1	1	1	1	1	1	1	1	1	1
Landfill - Unlined Area Excavation/Backfill																								
Landfill - Stockpile Relocation																								
Landfill - Module Closure																								
Admin																								
Main Entrance																								
Western Entrance																								
Overpass																								
Recovered Materials Storage																								
Primary Maintenance Facility																								
Satellite Maintenance and Staff Facility																								
Stormwater Pond																								
Main Site HHW Facility																								
Compost Pond Removal																								
Site Utilities																								
MRF Upgrade to TS																								
Compatible/Programmatic Facilities																								
Flare																								

WPWMA Construction Project Schedule

Last Updated 20.02.2020

Colour	Meaning
(orange)	= Critical Element Initial Build
(green)	= Necessary Supporting Element
(blue-purple)	= Existing Feature to be Removed
(grey)	= Replacement
(yellow)	= Candidate Peak Year

Plan Concept 1 (CEQA Schedule)

Project El	2037												2038												2039												2040												2041												2042												2043												2044											
	J	F	M	A	M	J	J	A	S	O	N	D	J	F	M	A	M	J	J	A	S	O	N	D	J	F	M	A	M	J	J	A	S	O	N	D	J	F	M	A	M	J	J	A	S	O	N	D	J	F	M	A	M	J	J	A	S	O	N	D	J	F	M	A	M	J	J	A	S	O	N	D	J	F	M	A	M	J	J	A	S	O	N	D	J	F	M	A	M	J	J	A	S	O	N	D
Public Area																																																																																		1	1	1	1	1	1	1	1	1	1	1	1
C&D Facility																																																																																														
Composting	1	1	1	1	1	1	1	1	1	1	1	1																																																																1	1	1	1	1	1	1	1	1	1	1	1												
Landfill - Module Construction																																																													1	1	1	1	1	1	1	1	1	1	1	1																								
Landfill - Unlined Area Excavation/Backfill																																																																																														
Landfill - Stockpile Relocation																																																																																													
Landfill - Module Closure																																																																									1	1	1	1	1	1	1	1	1	1	1	1												
Admin																																																																																														
Main Entrance																																																	1	1	1	1	1	1	1	1	1	1	1	1																																				
Western Entrance																																																																																		1	1	1	1	1	1	1	1	1	1	1	1
Overpass																																																																																														
Recovered Materials Storage																																																																																														
Primary Maintenance Facility																																																																																														
Satellite Maintenance and Staff Facility																																																																																														
Stormwater Pond																																																																																															
Main Site HHW Facility																																																																																															
Compost Pond Removal																																																																																															
Site Utilities																																																																																															
MRF Upgrade to TS																																																																																															
Compatible/Programmatic Facilities																																																																																														
Flare																																																																																																

Plan Concept 2 (CEQA Schedule)

Project El	2037												2038												2039												2040												2041												2042												2043												2044											
	J	F	M	A	M	J	J	A	S	O	N	D	J	F	M	A	M	J	J	A	S	O	N	D	J	F	M	A	M	J	J	A	S	O	N	D	J	F	M	A	M	J	J	A	S	O	N	D	J	F	M	A	M	J	J	A	S	O	N	D	J	F	M	A	M	J	J	A	S	O	N	D	J	F	M	A	M	J	J	A	S	O	N	D	J	F	M	A	M	J	J	A	S	O	N	D
Public Area																																																																																																
C&D Facility	1	1	1	1	1	1	1	1	1	1	1	1																																																																																
Composting													1	1	1	1	1	1	1	1	1	1	1	1																																					1	1	1	1	1	1	1	1	1	1	1	1	1	1	1	1	1	1	1	1	1	1	1	1												
Landfill - Module Construction																																																																																			1	1	1	1	1	1	1	1	1	1	1	1
Landfill - Unlined Area Excavation/Backfill																																																																																															
Landfill - Stockpile Relocation																																																																																															
Landfill - Module Closure	1	1	1	1	1	1	1	1	1	1	1	1																																																																																		
Admin																																																																																															
Main Entrance																									1	1	1	1	1	1	1	1	1	1	1	1																																																												
Western Entrance																																																																																															
Overpass																																																																																														
Recovered Materials Storage																																																																																														
Primary Maintenance Facility																																																																																														
Satellite Maintenance and Staff Facility																																																																																														
Stormwater Pond																																																																																															
Main Site HHW Facility																																																																																															
Compost Pond Removal																																																																																															
Site Utilities																																																																																															
MRF Upgrade to TS																																																																																															
Compatible/Programmatic Facilities																																																																																														
Flare																																																																																															

WPWMA Construction Project Schedule

Last Updated 20.02.2020

- = Critical Element Initial Build
- = Necessary Supporting Element
- = Existing Feature to be Removed
- = Replacement
- = Candidate Peak Year

Plan Concept 1 (CEQA Schedule)

Project El	2045												2046												2047												2048												2049												2050											
	J	F	M	A	M	J	J	A	S	O	N	D	J	F	M	A	M	J	J	A	S	O	N	D	J	F	M	A	M	J	J	A	S	O	N	D	J	F	M	A	M	J	J	A	S	O	N	D	J	F	M	A	M	J	J	A	S	O	N	D	J	F	M	A	M	J	J	A	S	O	N	D
Public Area																																																	1	1	1	1	1	1	1	1	1	1	1	1												
C&D Facility																																																	1	1	1	1	1	1	1	1	1	1	1	1												
Composting																									1	1	1	1	1	1	1	1	1	1	1	1																																				
Landfill - Module Construction																																																																							
Landfill - Unlined Area Excavation/Backfill													1	1	1	1	1	1	1	1	1	1	1	1	1	1	1	1	1	1	1	1	1	1	1	1	1	1	1	1	1	1	1	1	1	1	1	1	1	1	1	1	1	1	1	1	1	1	1	1	1	1	1	1	1	1	1	1	1	1	1	1
Landfill - Stockpile Relocation																																																																							
Landfill - Module Closure																																																																							
Admin																																																																							
Main Entrance																																																																							
Western Entrance																																																	1	1	1	1	1	1	1	1	1	1	1	1												
Overpass																																																																							
Recovered Materials Storage																																																	1	1	1	1	1	1	1	1	1	1	1	1												
Primary Maintenance Facility																																																																							
Satellite Maintenance and Staff Facility													1	1	1	1	1	1	1	1	1	1	1	1																																																
Stormwater Pond																																																																							
Main Site HHW Facility																																																																							
Compost Pond Removal																																																																							
Site Utilities																																																																							
MRF Upgrade to TS																																																																							
Compatible/Programmatic Facilities																																																																							
Flare																																																																							

Plan Concept 2 (CEQA Schedule)

Project El	2045												2046												2047												2048												2049												2050											
	J	F	M	A	M	J	J	A	S	O	N	D	J	F	M	A	M	J	J	A	S	O	N	D	J	F	M	A	M	J	J	A	S	O	N	D	J	F	M	A	M	J	J	A	S	O	N	D	J	F	M	A	M	J	J	A	S	O	N	D	J	F	M	A	M	J	J	A	S	O	N	D
Public Area													1	1	1	1	1	1	1	1	1	1	1	1																																																
C&D Facility																									1	1	1	1	1	1	1	1	1	1	1	1																																				
Composting																																					1	1	1	1	1	1	1	1	1	1	1	1																								
Landfill - Module Construction																																																																							
Landfill - Unlined Area Excavation/Backfill																																																																							
Landfill - Stockpile Relocation																																																																							
Landfill - Module Closure	1	1	1	1	1	1	1	1	1	1	1	1																																																												
Admin																																																																							
Main Entrance																																																	1	1	1	1	1	1	1	1	1	1	1	1												
Western Entrance																									1	1	1	1	1	1	1	1	1	1	1	1																																				
Overpass																									1	1	1	1	1	1	1	1	1	1	1	1																																				
Recovered Materials Storage																																																																							
Primary Maintenance Facility																																																	1	1	1	1	1	1	1	1	1	1	1	1												
Satellite Maintenance and Staff Facility																																																	1	1	1	1	1	1	1	1	1	1	1	1												
Stormwater Pond																																																																							
Main Site HHW Facility																																																																							
Compost Pond Removal																																																																							
Site Utilities																																																																							
MRF Upgrade to TS																																																																							
Compatible/Programmatic Facilities																																																																							
Flare																																																																							

Construction Timing Assumptions

Last Updated	12.02.2020

Project Element	**Sub-Element**	**Plan Concept 1 Assumptions**	**Plan Concept 2 Assumptions**
Public Area		- Shift one year to 2024 for more reasonable start date. Public Area will be first to be built - Assume full Public Area built in one year, instead of staggered as in CER schedule	- Must be built after or at tail end of Unlined Area Excavation/Backfill since some of the Public Area will be built on top of old landfill - Assume full Public Area built in one year, instead of staggered as in CER schedule
	Public Area - Roadways		
	Public Area - Buyback (220' x 230')		
	Public Area - HHW (300' x 100')		
	Public Area - Reuse Store Area (155' x 140')		
	Public Area - Tipping Area		
C&D Facility		- Built 2-3 years after Compost per WPWMA - Ask WPWMA how soon we need C&D Area, currently slated for 2030	- Must be built after Unlined Area Excavation/Backfill since majority of C&D Area will be built on top of old landfill - Must be built before Compost because Compost is built over old C&D Area
	C&D - C&D Pad		
	C&D - Processing Line		
Composting		- Built 2 years after Public Area per WPWMA - Compost is built partially in separate events because full Compost Area is not needed given anticipated tonnage growth. Subsequent builds are timed to accommodate predicted tonnage in those years. - Facility dimensions sizing accounts for Compost Option 3 layout even though Option 4 was costed in CER	- Must be built after C&D Area because Compost will be built on top of old C&D Area - Compost is built partially in separate events because full Compost Area is not needed given anticipated tonnage growth. Subsequent builds are timed to accommodate predicted tonnage in those years. - Facility dimensions sizing accounts for Compost Option 3 layout even though Option 4 was costed in CER
	Compost - Green Waste Pad (210' x 225')		
	Compost - Wood Waste Pad (115' x 225')		
	Compost - Outdoor Receiving Area (90' x 200')	Assume receiving building will be built	Assume receiving building will be built
	Compost - Screening and Product Storage Pad (400' x 350')		
	Compost - Temporary Positive ASP System	Assume no more temp ASP system, WPWMA will need to figure out interim compost outside of this project. Temp ASP does not include pad construction, all pad is included in full buildout.	Assume no more temp ASP system, WPWMA will need to figure out interim compost outside of this project. Temp ASP does not include pad construction, all pad is included in full buildout.
	Compost - Active Composting System (205' x 880')		
	Compost - Biofilter (135' x 880')		
	Compost - ASP Curing System (185' x 880')		
	Compost - Dedicated Stormwater Ponds		
	Compost - Miscellaneous Equipment		
Landfill			
	Landfill Construction	- Module 6 will be built in 2023 (not part of Project) - Assume LF module built every 5-10 years, not to coincide with other major construction	- Module 6 will be built in 2023 (not part of Project) - Assume LF module built every 5-10 years, not to coincide with other major construction - Ask Josh/Brenda what year we will start constructing western landfill
	Unlined Area Excavation/Backfill	- Occur over 5 years at tail end of 2050 timeline per WPWMA - Excavation only, no backfill (will be filled with waste as part of landfill construction)	- Occur over 3 years at beginning of 2050 timeline - Let Air team know we need to account for excavation and backfill construction in PC2
	Stockpile Relocation	- One relocation	- Two relocations accomplished in 3 movements (first relocation will be moved in 50% increments, second relocation will be moved in full)
	Closure	- Per WPWMA (2/13/2020), partial closure likely happening year after module excavation. Module lining happens in 2nd year and same crew also does partial closure.	- Per WPWMA (2/13/2020), partial closure likely happening year after module excavation. Module lining happens in 2nd year and same crew also does partial closure.
Admin		- No specific timing for this	- No specific timing for this
	Admin Staff Bldg		
	Admin Staff Parking Lot		
Main Entrance		- No specific timing for this	- Initial retrofit prior to Public Area construction, full buildout after C&D and Compost
	Main Entrance - Roadways		
	Main Entrance - Scale/Building		
Western Entrance		- Built one year before Public Area to allow for construction traffic	- Built prior to construction of new landfill
	Western Entrance - Roadways		
	Western Entrance - Scale/Building		
Overpass		- Not immediately needed, operations can utilize public roadway until overpass gets built	- Built prior to construction of new landfill, assume PC2 has a conveyor and not an overpass
	Overpass		
Recovered Materials Storage		- No specific timing for this	- No specific timing for this
	Recyclables Storage Building		
Primary Maintenance Facility		- No specific timing for this	- No specific timing for this
	Primary Maintenance - Maintenance Area (250' x 300')		
Satellite Maintenance and Staff Facility		- Satellite Maint needed for western property	- Satellite Maint built after Western Entrance and Overpass/Conveyor
	Satellite Maintenance and Staff - Maintenance Area		
	Satellite Maintenance and Staff - Staff Bldg and Parking Area		
Stormwater Pond		- Construct SW ponds in same years as the Public, C&D areas and prior to first LF module	- Construct SW ponds in same years as the Public, C&D areas and prior to first LF module + WPWMA indicates they need one in Year 1 per 2/5/2020 meeting
	New Stormwater Ponds		
Main Site HHW Facility		- No specific timing for this	- No Main Site HHW in PC2
	HHW Building (65' x 75')		
Compost Pond Removal		- Remove compost pond at same time as main entrance construction since it's in same vicinity	- Must be removed prior to Public Area since this space will be utilized by Public Area - After removal, do we need to replace with interim compost pond before Compost Area is built?
	Compost Pond Removal		
Special Permits and Allow (Geotech only)		Assume this is part of operations (not a separate construction event)	Assume this is part of operations (not a separate construction event)
	Geotechnical Investigation		
Wetlands Mitigation		This is a cost, not construction	This is a cost, not construction
	Wetlands Mitigation		
Site Beautification		Assume this is part of operations (not a separate construction event)	Assume this is part of operations (not a separate construction event)
	Facility Beautification		
Site-wide Demolition		Assume this is part of individual elements	Assume this is part of individual elements
	Site-wide Demolition and Disposal		
Site Utilities		- Must be built with Public Area or before	- There is flexibility to construct this, as it is not likely needed until western property construction begins
	Shared Site Utilities		
MRF Upgrade to TS		- Will be kept outside of 2050 timeline	- Will be kept outside of 2050 timeline
	MRF Upgrade to TS		

WPWMA EIR
Construction Emissions - Proposed Project Exhaust Emissions
Plan Concept 1

Assumptions:

Construction Schedule:	4	weeks/month
	5	days/week
	8	hrs/day
Unit Conversion:	453,592	g/lb

= manual input
= max value (conditional formatting)

Additional travel other than equipment operation is minimal and not included in this analysis.
Since construction contractors would be large operators of diesel off-road equipment, all off-road diesel equipment would be compliant with CARB requirements at the time of construction.
After 2020, all off-road diesel construction equipment would meet Tier 4 Final emission standards.

Public Area

Construction Period: 01.01.2024 to
Number of workers: Duration (weeks):

Off Road Equipment Type	Area Size	Number (ea)	Daily Hours	Annual Days Equipment Used
Demolition				
Scraper - CAT 657				
Water Truck - 4000 gal, 3 axle, 58000 gvw				
Site Preparation (15 ac)	***15 ac***	***7***	***56***	***10***
Graders	15	0	0	0
Tractors/Loaders/Backhoes	15	4	8	10
Rubber Tired Dozers	15	3	8	10
Scrapers	15	0	0	0
Grading (15 ac)	***15 ac***	***8***	***64***	***30***
Rubber Tired Dozers	15	1	8	30
Concrete/Industrial Saws	15	0	0	0
Tractors/Loaders/Backhoes	15	2	8	30
Graders	15	1	8	30
Excavators	15	2	8	30
Scrapers	15	2	8	30
Building Construction (2 ac)	***2 ac***	***7***	***50***	***220***
Cranes	2	1	6	220
Forklifts	2	1	6	220
Tractors/Loaders/Backhoes	2	1	6	220
Welders	2	3	8	220
Generator Sets	2	1	8	220
Paving - Asphalt (9 ac)	***9 ac***	***8***	***52***	***20***
Pavers	9	1	8	20
Cement and Mortar Mixers	9	2	6	20
Rollers	9	2	6	20
Tractors/Loaders/Backhoes	9	1	8	20
Paving Equipment	9	2	6	20
Paving - Concrete (2 ac)	***2 ac***	***5***	***35***	***10***
Pavers	2	1	6	10
Cement and Mortar Mixers	2	1	6	10
Rollers	2	1	7	10
Tractors/Loaders/Backhoes	2	1	8	10
Paving Equipment	2	1	8	10
Site Preparation - Pond (2 ac)	***2 ac***	***3***	***23***	***3***
Graders	2	1	8	3
Tractors/Loaders/Backhoes	2	1	8	3
Rubber Tired Dozers	2	1	7	3
Scrapers	2	0	0	0
Excavation (9735 cy)	***9735 cy***	***4***	***26***	***1***
Scrapers	9735	1	8	1
Rubber Tired Dozers	9735	1	8	1
Off-Highway Trucks	9735	1	8	1
Other General Industrial Equipment	9735	1	2	1

Area Size Reference Table	Size	Unit
Site Preparation	15	ac
Grading	15	ac
Building Construction	2	ac
Paving - Asphalt	9	ac
Paving - Concrete	2	ac
Site Preparation - Pond	2	ac
Excavation	9735	cy

WPWMA EIR
Construction Emissions - Proposed Project Exhaust Emissions

Public Area

Emission Factors					Emissions Factor (g/bhp-hr)								
Equipment Type	HorsePower	Load Factor	Construction Year	Year+Equipment Type+HorsePower	CO	NOX	PM10	PM2.5	ROG	TOG	SO2	CO2	CH4
Demolition													
Site Preparation (15 ac)													
Graders													
Tractors/Loaders/Backhoes	97	0,37	2024	2024Tractors/Loaders/Backhoes120	3,70E+00	2,60E-01	8,00E-03	8,00E-03	6,00E-02	2,71E-01	5,00E-03	4,77E+02	1,54E-01
Rubber Tired Dozers	247	0,4	2024	2024Rubber Tired Dozers250	2,20E+00	2,60E-01	8,00E-03	8,00E-03	6,00E-02	4,75E-01	5,00E-03	4,75E+02	1,53E-01
Scrapers													
Grading (15 ac)													
Rubber Tired Dozers	247	0,4	2024	2024Rubber Tired Dozers250	2,20E+00	2,60E-01	8,00E-03	8,00E-03	6,00E-02	4,75E-01	5,00E-03	4,75E+02	1,53E-01
Concrete/Industrial Saws													
Tractors/Loaders/Backhoes	97	0,37	2024	2024Tractors/Loaders/Backhoes120	3,70E+00	2,60E-01	8,00E-03	8,00E-03	6,00E-02	2,71E-01	5,00E-03	4,77E+02	1,54E-01
Graders	187	0,41	2024	2024Graders250	2,20E+00	2,60E-01	8,00E-03	8,00E-03	6,00E-02	3,12E-01	5,00E-03	4,74E+02	1,53E-01
Excavators	158	0,38	2024	2024Excavators175	2,20E+00	2,60E-01	8,00E-03	8,00E-03	6,00E-02	2,03E-01	5,00E-03	4,72E+02	1,53E-01
Scrapers	367	0,48	2024	2024Scrapers500	2,20E+00	2,60E-01	8,00E-03	8,00E-03	6,00E-02	2,91E-01	5,00E-03	4,73E+02	1,53E-01
Building Construction (2 ac)													
Cranes	231	0,29	2024	2024Cranes250	2,20E+00	2,60E-01	8,00E-03	8,00E-03	6,00E-02	3,34E-01	5,00E-03	4,73E+02	1,53E-01
Forklifts	89	0,2	2024	2024Forklifts120	3,70E+00	2,60E-01	8,00E-03	8,00E-03	6,00E-02	3,57E-01	5,00E-03	4,72E+02	1,53E-01
Tractors/Loaders/Backhoes	97	0,37	2024	2024Tractors/Loaders/Backhoes120	3,70E+00	2,60E-01	8,00E-03	8,00E-03	6,00E-02	2,71E-01	5,00E-03	4,77E+02	1,54E-01
Welders	46	0,45	2024	2024Welders50	4,10E+00	2,75E+00	8,00E-03	8,00E-03	1,20E-01	6,78E+00	7,00E-03	5,68E+02	5,80E-02
Generator Sets	84	0,74	2024	2024Generator Sets120	3,70E+00	2,60E-01	8,00E-03	8,00E-03	6,00E-02	5,29E+00	6,00E-03	5,68E+02	2,30E-02
Paving - Asphalt (9 ac)													
Pavers	130	0,42	2024	2024Pavers175	2,20E+00	2,60E-01	8,00E-03	8,00E-03	6,00E-02	2,27E-01	5,00E-03	4,73E+02	1,53E-01
Cement and Mortar Mixers	9	0,56	2024	2024Cement and Mortar Mixers15	4,10E+00	2,75E+00	8,00E-03	8,00E-03	1,20E-01	1,08E+00	8,00E-03	5,68E+02	5,90E-02
Rollers	80	0,38	2024	2024Rollers120	3,70E+00	2,60E-01	8,00E-03	8,00E-03	6,00E-02	3,23E-01	5,00E-03	4,74E+02	1,53E-01
Tractors/Loaders/Backhoes	97	0,37	2024	2024Tractors/Loaders/Backhoes120	3,70E+00	2,60E-01	8,00E-03	8,00E-03	6,00E-02	2,71E-01	5,00E-03	4,77E+02	1,54E-01
Paving Equipment	132	0,36	2024	2024Paving Equipment175	2,20E+00	2,60E-01	8,00E-03	8,00E-03	6,00E-02	2,34E-01	5,00E-03	4,71E+02	1,52E-01
Paving - Concrete (2 ac)													
Pavers	130	0,42	2024	2024Pavers175	2,20E+00	2,60E-01	8,00E-03	8,00E-03	6,00E-02	2,27E-01	5,00E-03	4,73E+02	1,53E-01
Cement and Mortar Mixers	9	0,56	2024	2024Cement and Mortar Mixers15	4,10E+00	2,75E+00	8,00E-03	8,00E-03	1,20E-01	1,08E+00	8,00E-03	5,68E+02	5,90E-02
Rollers	80	0,38	2024	2024Rollers120	3,70E+00	2,60E-01	8,00E-03	8,00E-03	6,00E-02	3,23E-01	5,00E-03	4,74E+02	1,53E-01
Tractors/Loaders/Backhoes	97	0,37	2024	2024Tractors/Loaders/Backhoes120	3,70E+00	2,60E-01	8,00E-03	8,00E-03	6,00E-02	2,71E-01	5,00E-03	4,77E+02	1,54E-01
Paving Equipment	132	0,36	2024	2024Paving Equipment175	2,20E+00	2,60E-01	8,00E-03	8,00E-03	6,00E-02	2,34E-01	5,00E-03	4,71E+02	1,52E-01
Site Preparation - Pond (2 ac)													
Graders	187	0,41	2024	2024Graders250	2,20E+00	2,60E-01	8,00E-03	8,00E-03	6,00E-02	3,12E-01	5,00E-03	4,74E+02	1,53E-01
Tractors/Loaders/Backhoes	97	0,37	2024	2024Tractors/Loaders/Backhoes120	3,70E+00	2,60E-01	8,00E-03	8,00E-03	6,00E-02	2,71E-01	5,00E-03	4,77E+02	1,54E-01
Rubber Tired Dozers	247	0,4	2024	2024Rubber Tired Dozers250	2,20E+00	2,60E-01	8,00E-03	8,00E-03	6,00E-02	4,75E-01	5,00E-03	4,75E+02	1,53E-01
Scrapers													
Excavation (9735 cy)													
Scrapers	367	0,48	2024	2024Scrapers500	2,20E+00	2,60E-01	8,00E-03	8,00E-03	6,00E-02	2,91E-01	5,00E-03	4,73E+02	1,53E-01
Rubber Tired Dozers	247	0,4	2024	2024Rubber Tired Dozers250	2,20E+00	2,60E-01	8,00E-03	8,00E-03	6,00E-02	4,75E-01	5,00E-03	4,75E+02	1,53E-01
Off-Highway Trucks	402	0,38	2024	2024Off-Highway Trucks500	2,20E+00	2,60E-01	8,00E-03	8,00E-03	6,00E-02	2,20E-01	5,00E-03	4,75E+02	1,54E-01
Other General Industrial Equip	88	0,34	2024	2024Other General Industrial Equipmen	3,70E+00	2,60E-01	8,00E-03	8,00E-03	6,00E-02	3,42E-01	5,00E-03	4,70E+02	1,52E-01

WPWMA EIR
Construction Emissions - Proposed Project Exhaust Emissions

Public Area

	Hourly Emissions (lb/hr)									Daily Emissions (lb/day)									Annual Emissions (lb/yr)								
Equipment Type	**TOG**	**ROG**	**CO**	**NOX**	**SO2**	**PM10**	**PM2.5**	**CO2**	**CH4**	**TOG**	**ROG**	**CO**	**NOX**	**SO2**	**PM10**	**PM2.5**	**CO2**	**CH4**	**TOG**	**ROG**	**CO**	**NOX**	**SO2**	**PM10**	**PM2.5**	**CO2**	**CH4**
Demolition																											
Site Preparation (15 ac)																											
Graders																											
Tractors/Loaders/Backhoes	0,086	0,019	1,171	0,082	0,002	0,003	0,003	150,883	0,049	0,685	0,152	9,368	0,658	0,013	0,020	0,020	1 207,068	0,390	6,851	1,519	93,683	6,583	0,127	0,203	0,203	12 070,7	3,899
Rubber Tired Dozers	0,310	0,039	1,438	0,170	0,003	0,005	0,005	310,118	0,100	2,482	0,314	11,501	1,359	0,026	0,042	0,042	2 480,945	0,800	24,816	3,137	115,007	13,592	0,261	0,418	0,418	24 809,5	7,998
Scrapers																											
Grading (15 ac)																											
Rubber Tired Dozers	0,103	0,013	0,479	0,057	0,001	0,002	0,002	103,373	0,033	0,827	0,105	3,834	0,453	0,009	0,014	0,014	826,982	0,267	24,816	3,137	115,007	13,592	0,261	0,418	0,418	24 809,5	7,998
Concrete/Industrial Saws																											
Tractors/Loaders/Backhoes	0,043	0,009	0,586	0,041	0,001	0,001	0,001	75,442	0,024	0,343	0,076	4,684	0,329	0,006	0,010	0,010	603,534	0,195	10,277	2,279	140,524	9,875	0,190	0,304	0,304	18 106,0	5,849
Graders	0,053	0,010	0,372	0,044	0,001	0,001	0,001	80,064	0,026	0,422	0,081	2,975	0,352	0,007	0,011	0,011	640,508	0,207	12,660	2,434	89,247	10,547	0,203	0,325	0,325	19 215,2	6,207
Excavators	0,054	0,016	0,582	0,069	0,001	0,002	0,002	125,066	0,041	0,429	0,127	4,659	0,551	0,011	0,017	0,017	1 000,532	0,324	12,871	3,812	139,778	16,519	0,318	0,508	0,508	30 015,9	9,721
Scrapers	0,226	0,047	1,709	0,202	0,004	0,006	0,006	367,275	0,119	1,809	0,373	13,671	1,616	0,031	0,050	0,050	2 938,199	0,951	54,273	11,185	410,115	48,468	0,932	1,491	1,491	88 146,0	28,522
Building Construction (2 ac)																											
Cranes	0,049	0,009	0,325	0,038	0,001	0,001	0,001	69,851	0,023	0,296	0,053	1,949	0,230	0,004	0,007	0,007	419,106	0,136	65,144	11,697	428,885	50,686	0,975	1,560	1,560	92 203,3	29,827
Forklifts	0,014	0,002	0,145	0,010	0,000	0,000	0,000	18,504	0,006	0,084	0,014	0,871	0,061	0,001	0,002	0,002	111,023	0,036	18,497	3,108	191,659	13,468	0,259	0,414	0,414	24 425,1	7,925
Tractors/Loaders/Backhoes	0,021	0,005	0,293	0,021	0,000	0,001	0,001	37,721	0,012	0,128	0,028	1,757	0,123	0,002	0,004	0,004	226,325	0,073	28,262	6,267	386,441	27,155	0,522	0,836	0,836	49 791,6	16,084
Welders	0,928	0,016	0,561	0,376	0,001	0,001	0,001	77,804	0,008	7,426	0,131	4,491	3,012	0,008	0,009	0,009	622,434	0,064	1 633,686	28,915	987,922	662,631	1,687	1,928	1,928	136 935,4	13,975
Generator Sets	0,725	0,008	0,507	0,036	0,001	0,001	0,001	77,879	0,003	5,796	0,066	4,056	0,285	0,007	0,009	0,009	623,035	0,025	1 275,169	14,471	892,401	62,709	1,447	1,930	1,930	137 067,7	5,547
Paving - Asphalt (9 ac)																											
Pavers	0,027	0,007	0,265	0,031	0,001	0,001	0,001	56,895	0,018	0,219	0,058	2,119	0,250	0,005	0,008	0,008	455,163	0,147	4,370	1,156	42,371	5,007	0,096	0,154	0,154	9 103,3	2,947
Cement and Mortar Mixers	0,024	0,003	0,091	0,061	0,000	0,000	0,000	12,629	0,001	0,143	0,016	0,547	0,367	0,001	0,001	0,001	75,775	0,008	2,867	0,320	10,934	7,333	0,021	0,021	0,021	1 515,5	0,157
Rollers	0,043	0,008	0,496	0,035	0,001	0,001	0,001	63,536	0,021	0,260	0,048	2,976	0,209	0,004	0,006	0,006	381,219	0,123	5,202	0,965	59,514	4,182	0,080	0,129	0,129	7 624,4	2,461
Tractors/Loaders/Backhoes	0,021	0,005	0,293	0,021	0,000	0,001	0,001	37,721	0,012	0,171	0,038	2,342	0,165	0,003	0,005	0,005	301,767	0,097	3,426	0,760	46,841	3,292	0,063	0,101	0,101	6 035,3	1,950
Paving Equipment	0,049	0,013	0,461	0,054	0,001	0,002	0,002	98,617	0,032	0,294	0,075	2,766	0,327	0,006	0,010	0,010	591,699	0,191	5,882	1,509	55,315	6,537	0,126	0,201	0,201	11 834,0	3,822
Paving - Concrete (2 ac)																											
Pavers	0,027	0,007	0,265	0,031	0,001	0,001	0,001	56,895	0,018	0,164	0,043	1,589	0,188	0,004	0,006	0,006	341,372	0,111	1,639	0,433	15,889	1,878	0,036	0,058	0,058	3 413,7	1,105
Cement and Mortar Mixers	0,012	0,001	0,046	0,031	0,000	0,000	0,000	6,315	0,001	0,072	0,008	0,273	0,183	0,001	0,001	0,001	37,887	0,004	0,717	0,080	2,733	1,833	0,005	0,005	0,005	378,9	0,039
Rollers	0,022	0,004	0,248	0,017	0,000	0,001	0,001	31,768	0,010	0,152	0,028	1,736	0,122	0,002	0,004	0,004	222,378	0,072	1,517	0,281	17,358	1,220	0,023	0,038	0,038	2 223,8	0,718
Tractors/Loaders/Backhoes	0,021	0,005	0,293	0,021	0,000	0,001	0,001	37,721	0,012	0,171	0,038	2,342	0,165	0,003	0,005	0,005	301,767	0,097	1,713	0,380	23,421	1,646	0,032	0,051	0,051	3 017,7	0,975
Paving Equipment	0,025	0,006	0,230	0,027	0,001	0,001	0,001	49,308	0,016	0,196	0,050	1,844	0,218	0,004	0,007	0,007	394,466	0,127	1,961	0,503	18,438	2,179	0,042	0,067	0,067	3 944,7	1,274
Site Preparation - Pond (2 ac)																											
Graders	0,053	0,010	0,372	0,044	0,001	0,001	0,001	80,064	0,026	0,422	0,081	2,975	0,352	0,007	0,011	0,011	640,508	0,207	1,266	0,243	8,925	1,055	0,020	0,032	0,032	1 921,5	0,621
Tractors/Loaders/Backhoes	0,021	0,005	0,293	0,021	0,000	0,001	0,001	37,721	0,012	0,171	0,038	2,342	0,165	0,003	0,005	0,005	301,767	0,097	0,514	0,114	7,026	0,494	0,009	0,015	0,015	905,3	0,292
Rubber Tired Dozers	0,103	0,013	0,479	0,057	0,001	0,002	0,002	103,373	0,033	0,724	0,091	3,354	0,396	0,008	0,012	0,012	723,609	0,233	2,171	0,274	10,063	1,189	0,023	0,037	0,037	2 170,8	0,700
Scrapers																											
Excavation (9735 cy)																											
Scrapers	0,113	0,023	0,854	0,101	0,002	0,003	0,003	183,637	0,059	0,905	0,186	6,835	0,808	0,016	0,025	0,025	1 469,099	0,475	0,905	0,186	6,835	0,808	0,016	0,025	0,025	1 469,1	0,475
Rubber Tired Dozers	0,103	0,013	0,479	0,057	0,001	0,002	0,002	103,373	0,033	0,827	0,105	3,834	0,453	0,009	0,014	0,014	826,982	0,267	0,827	0,105	3,834	0,453	0,009	0,014	0,014	827,0	0,267
Off-Highway Trucks	0,074	0,020	0,741	0,088	0,002	0,003	0,003	160,044	0,052	0,591	0,162	5,927	0,700	0,013	0,022	0,022	1 280,352	0,415	0,591	0,162	5,927	0,700	0,013	0,022	0,022	1 280,4	0,415
Other General Industrial Equip	0,023	0,004	0,244	0,017	0,000	0,001	0,001	31,002	0,010	0,045	0,008	0,488	0,034	0,001	0,001	0,001	62,005	0,020	0,045	0,008	0,488	0,034	0,001	0,001	0,001	62,0	0,020
Total per Phase																											
Site Preparation	0,396	0,058	2,609	0,252	0,005	0,008	0,008	461,002	0,149	3,167	0,466	20,869	2,017	0,039	0,062	0,062	3 688,013	1,190	31,667	4,656	208,690	20,175	0,388	0,621	0,621	36 880,1	11,897
Grading	0,479	0,095	3,728	0,413	0,008	0,013	0,013	751,219	0,243	3,830	0,762	29,822	3,300	0,063	0,102	0,102	6 009,754	1,943	114,896	22,846	894,672	99,001	1,904	3,046	3,046	180 292,6	58,296
Building Construction	1,738	0,041	1,831	0,481	0,003	0,004	0,004	281,759	0,052	13,731	0,293	13,124	3,712	0,022	0,030	0,030	2 001,923	0,333	3 020,757	64,458	2 887,309	816,650	4,890	6,667	6,667	440 423,1	73,360
Paving - Asphalt	0,165	0,035	1,606	0,202	0,003	0,005	0,005	269,398	0,084	1,087	0,235	10,749	1,318	0,019	0,030	0,030	1 805,622	0,567	21,747	4,709	214,976	26,352	0,387	0,607	0,607	36 112,4	11,336
Paving - Concrete	0,107	0,024	1,082	0,127	0,002	0,003	0,003	182,007	0,057	0,755	0,168	7,784	0,876	0,014	0,022	0,022	1 297,870	0,411	7,546	1,677	77,840	8,756	0,138	0,218	0,218	12 978,7	4,111
Site Preparation - Pond	0,178	0,028	1,144	0,121	0,002	0,004	0,004	221,157	0,071	1,317	0,211	8,671	0,913	0,018	0,028	0,028	1 665,884	0,538	3,951	0,632	26,014	2,738	0,053	0,084	0,084	4 997,7	1,613
Excavation	0,313	0,061	2,319	0,262	0,005	0,008	0,008	478,056	0,155	2,368	0,461	17,084	1,996	0,038	0,061	0,061	3 638,437	1,177	2,368	0,461	17,084	1,996	0,038	0,061	0,061	3 638,4	1,177
Total																			**3 202,933**	**99,439**	**4 326,585**	**975,667**	**7,798**	**11,304**	**11,304**	**715 323,1**	**161,791**

WPWMA EIR
Construction Emissions - Proposed Project Exhaust Emissions
Plan Concept 1

Western Entrance

Construction Period:	01.01.2024	to		
Number of workers:		Duration (weeks):		

Off Road Equipment Type	Area Size	Number (ea)	Daily Hours	Annual Days Equipment Used
Demolition				
Scraper - CAT 657				
Water Truck - 4000 gal, 3 axle, 58000 gvw				
Site Preparation (2 ac)	***2 ac***	***3***	***23***	***3***
Graders	2	1	8	3
Tractors/Loaders/Backhoes	2	1	8	3
Rubber Tired Dozers	2	1	7	3
Scrapers	2	0	0	0
Grading (2 ac)	***2 ac***	***3***	***19***	***6***
Rubber Tired Dozers	2	1	6	6
Concrete/Industrial Saws	2	0	0	0
Tractors/Loaders/Backhoes	2	1	7	6
Graders	2	1	6	6
Excavators	2	0	0	0
Scrapers	2	0	0	0
Building Construction (0 ac)	***0 ac***	***0***	***0***	***0***
Cranes	0	0	0	0
Forklifts	0	0	0	0
Tractors/Loaders/Backhoes	0	0	0	0
Welders	0	0	0	0
Generator Sets	0	0	0	0
Paving - Asphalt (2 ac)	***2 ac***	***5***	***35***	***10***
Pavers	2	1	6	10
Cement and Mortar Mixers	2	1	6	10
Rollers	2	1	7	10
Tractors/Loaders/Backhoes	2	1	8	10
Paving Equipment	2	1	8	10
Paving - Concrete (1 ac)	***1 ac***	***7***	***45***	***10***
Pavers	1	1	7	10
Cement and Mortar Mixers	1	4	6	10
Rollers	1	1	7	10
Tractors/Loaders/Backhoes	1	1	7	10
Paving Equipment	1	0	0	0
Site Preparation - Pond (0 ac)	***0 ac***	***0***	***0***	***0***
Graders	0	0	0	0
Tractors/Loaders/Backhoes	0	0	0	0
Rubber Tired Dozers	0	0	0	0
Scrapers	0	0	0	0
Excavation (0 cy)	***0 cy***	***0***	***0***	***0***
Scrapers	0	0	0	0
Rubber Tired Dozers	0	0	0	0
Off-Highway Trucks	0	0	0	0
Other General Industrial Equipment	0	0	0	0

Area Size Reference Table	Size	Unit
Site Preparation	2	ac
Grading	2	ac
Building Construction	0	ac
Paving - Asphalt	2	ac
Paving - Concrete	1	ac
Site Preparation - Pond	0	ac
Excavation	0	cy

WPWMA EIR
Construction Emissions - Proposed Project Exhaust Emissions

Western Entrance

Emission Factors					Emissions Factor (g/bhp-hr)								
Equipment Type	HorsePower	Load Factor	Construction Year	Year+Equipment Type+HorsePower	CO	NOX	PM10	PM2.5	ROG	TOG	SO2	CO2	CH4
Demolition													
Site Preparation (2 ac)													
Graders	187	0,41	2024	2024Graders250	2,20E+00	2,60E-01	8,00E-03	8,00E-03	6,00E-02	3,12E-01	5,00E-03	4,74E+02	1,53E-01
Tractors/Loaders/Backhoes	97	0,37	2024	2024Tractors/Loaders/Backhoes120	3,70E+00	2,60E-01	8,00E-03	8,00E-03	6,00E-02	2,71E-01	5,00E-03	4,77E+02	1,54E-01
Rubber Tired Dozers	247	0,4	2024	2024Rubber Tired Dozers250	2,20E+00	2,60E-01	8,00E-03	8,00E-03	6,00E-02	4,75E-01	5,00E-03	4,75E+02	1,53E-01
Scrapers													
Grading (2 ac)													
Rubber Tired Dozers	247	0,4	2024	2024Rubber Tired Dozers250	2,20E+00	2,60E-01	8,00E-03	8,00E-03	6,00E-02	4,75E-01	5,00E-03	4,75E+02	1,53E-01
Concrete/Industrial Saws													
Tractors/Loaders/Backhoes	97	0,37	2024	2024Tractors/Loaders/Backhoes120	3,70E+00	2,60E-01	8,00E-03	8,00E-03	6,00E-02	2,71E-01	5,00E-03	4,77E+02	1,54E-01
Graders	187	0,41	2024	2024Graders250	2,20E+00	2,60E-01	8,00E-03	8,00E-03	6,00E-02	3,12E-01	5,00E-03	4,74E+02	1,53E-01
Excavators													
Scrapers													
Building Construction (0 ac)													
Cranes													
Forklifts													
Tractors/Loaders/Backhoes													
Welders													
Generator Sets													
Paving - Asphalt (2 ac)													
Pavers	130	0,42	2024	2024Pavers175	2,20E+00	2,60E-01	8,00E-03	8,00E-03	6,00E-02	2,27E-01	5,00E-03	4,73E+02	1,53E-01
Cement and Mortar Mixers	9	0,56	2024	2024Cement and Mortar Mixers15	4,10E+00	2,75E+00	8,00E-03	8,00E-03	1,20E-01	1,08E+00	8,00E-03	5,68E+02	5,90E-02
Rollers	80	0,38	2024	2024Rollers120	3,70E+00	2,60E-01	8,00E-03	8,00E-03	6,00E-02	3,23E-01	5,00E-03	4,74E+02	1,53E-01
Tractors/Loaders/Backhoes	97	0,37	2024	2024Tractors/Loaders/Backhoes120	3,70E+00	2,60E-01	8,00E-03	8,00E-03	6,00E-02	2,71E-01	5,00E-03	4,77E+02	1,54E-01
Paving Equipment	132	0,36	2024	2024Paving Equipment175	2,20E+00	2,60E-01	8,00E-03	8,00E-03	6,00E-02	2,34E-01	5,00E-03	4,71E+02	1,52E-01
Paving - Concrete (1 ac)													
Pavers	130	0,42	2024	2024Pavers175	2,20E+00	2,60E-01	8,00E-03	8,00E-03	6,00E-02	2,27E-01	5,00E-03	4,73E+02	1,53E-01
Cement and Mortar Mixers	9	0,56	2024	2024Cement and Mortar Mixers15	4,10E+00	2,75E+00	8,00E-03	8,00E-03	1,20E-01	1,08E+00	8,00E-03	5,68E+02	5,90E-02
Rollers	80	0,38	2024	2024Rollers120	3,70E+00	2,60E-01	8,00E-03	8,00E-03	6,00E-02	3,23E-01	5,00E-03	4,74E+02	1,53E-01
Tractors/Loaders/Backhoes	97	0,37	2024	2024Tractors/Loaders/Backhoes120	3,70E+00	2,60E-01	8,00E-03	8,00E-03	6,00E-02	2,71E-01	5,00E-03	4,77E+02	1,54E-01
Paving Equipment													
Site Preparation - Pond (0 ac)													
Graders													
Tractors/Loaders/Backhoes													
Rubber Tired Dozers													
Scrapers													
Excavation (0 cy)													
Scrapers													
Rubber Tired Dozers													
Off-Highway Trucks													
Other General Industrial Equip													

WPWMA EIR
Construction Emissions - Proposed Project Exhaust Emissions

Western Entrance

	Hourly Emissions (lb/hr)									Daily Emissions (lb/day)									Annual Emissions (lb/yr)								
Equipment Type	**TOG**	**ROG**	**CO**	**NOX**	**SO2**	**PM10**	**PM2.5**	**CO2**	**CH4**	**TOG**	**ROG**	**CO**	**NOX**	**SO2**	**PM10**	**PM2.5**	**CO2**	**CH4**	**TOG**	**ROG**	**CO**	**NOX**	**SO2**	**PM10**	**PM2.5**	**CO2**	**CH4**
Demolition																											
Site Preparation (2 ac)																											
Graders	0,053	0,010	0,372	0,044	0,001	0,001	0,001	80,064	0,026	0,422	0,081	2,975	0,352	0,007	0,011	0,011	640,508	0,207	1,266	0,243	8,925	1,055	0,020	0,032	0,032	1 921,5	0,621
Tractors/Loaders/Backhoes	0,021	0,005	0,293	0,021	0,000	0,001	0,001	37,721	0,012	0,171	0,038	2,342	0,165	0,003	0,005	0,005	301,767	0,097	0,514	0,114	7,026	0,494	0,009	0,015	0,015	905,3	0,292
Rubber Tired Dozers	0,103	0,013	0,479	0,057	0,001	0,002	0,002	103,373	0,033	0,724	0,091	3,354	0,396	0,008	0,012	0,012	723,609	0,233	2,171	0,274	10,063	1,189	0,023	0,037	0,037	2 170,8	0,700
Scrapers																											
Grading (2 ac)																											
Rubber Tired Dozers	0,103	0,013	0,479	0,057	0,001	0,002	0,002	103,373	0,033	0,620	0,078	2,875	0,340	0,007	0,010	0,010	620,236	0,200	3,722	0,470	17,251	2,039	0,039	0,063	0,063	3 721,4	1,200
Concrete/Industrial Saws																											
Tractors/Loaders/Backhoes	0,021	0,005	0,293	0,021	0,000	0,001	0,001	37,721	0,012	0,150	0,033	2,049	0,144	0,003	0,004	0,004	264,046	0,085	0,899	0,199	12,296	0,864	0,017	0,027	0,027	1 584,3	0,512
Graders	0,053	0,010	0,372	0,044	0,001	0,001	0,001	80,064	0,026	0,316	0,061	2,231	0,264	0,005	0,008	0,008	480,381	0,155	1,899	0,365	13,387	1,582	0,030	0,049	0,049	2 882,3	0,931
Excavators																											
Scrapers																											
Building Construction (0 ac)																											
Cranes																											
Forklifts																											
Tractors/Loaders/Backhoes																											
Welders																											
Generator Sets																											
Paving - Asphalt (2 ac)																											
Pavers	0,027	0,007	0,265	0,031	0,001	0,001	0,001	56,895	0,018	0,164	0,043	1,589	0,188	0,004	0,006	0,006	341,372	0,111	1,639	0,433	15,889	1,878	0,036	0,058	0,058	3 413,7	1,105
Cement and Mortar Mixers	0,012	0,001	0,046	0,031	0,000	0,000	0,000	6,315	0,001	0,072	0,008	0,273	0,183	0,001	0,001	0,001	37,887	0,004	0,717	0,080	2,733	1,833	0,005	0,005	0,005	378,9	0,039
Rollers	0,022	0,004	0,248	0,017	0,000	0,001	0,001	31,768	0,010	0,152	0,028	1,736	0,122	0,002	0,004	0,004	222,378	0,072	1,517	0,281	17,358	1,220	0,023	0,038	0,038	2 223,8	0,718
Tractors/Loaders/Backhoes	0,021	0,005	0,293	0,021	0,000	0,001	0,001	37,721	0,012	0,171	0,038	2,342	0,165	0,003	0,005	0,005	301,767	0,097	1,713	0,380	23,421	1,646	0,032	0,051	0,051	3 017,7	0,975
Paving Equipment	0,025	0,006	0,230	0,027	0,001	0,001	0,001	49,308	0,016	0,196	0,050	1,844	0,218	0,004	0,007	0,007	394,466	0,127	1,961	0,503	18,438	2,179	0,042	0,067	0,067	3 944,7	1,274
Paving - Concrete (1 ac)																											
Pavers	0,027	0,007	0,265	0,031	0,001	0,001	0,001	56,895	0,018	0,191	0,051	1,854	0,219	0,004	0,007	0,007	398,267	0,129	1,912	0,506	18,537	2,191	0,042	0,067	0,067	3 982,7	1,289
Cement and Mortar Mixers	0,048	0,005	0,182	0,122	0,000	0,000	0,000	25,258	0,003	0,287	0,032	1,093	0,733	0,002	0,002	0,002	151,549	0,016	2,867	0,320	10,934	7,333	0,021	0,021	0,021	1 515,5	0,157
Rollers	0,022	0,004	0,248	0,017	0,000	0,001	0,001	31,768	0,010	0,152	0,028	1,736	0,122	0,002	0,004	0,004	222,378	0,072	1,517	0,281	17,358	1,220	0,023	0,038	0,038	2 223,8	0,718
Tractors/Loaders/Backhoes	0,021	0,005	0,293	0,021	0,000	0,001	0,001	37,721	0,012	0,150	0,033	2,049	0,144	0,003	0,004	0,004	264,046	0,085	1,499	0,332	20,493	1,440	0,028	0,044	0,044	2 640,5	0,853
Paving Equipment																											
Site Preparation - Pond (0 ac)																											
Graders																											
Tractors/Loaders/Backhoes																											
Rubber Tired Dozers																											
Scrapers																											
Excavation (0 cy)																											
Scrapers																											
Rubber Tired Dozers																											
Off-Highway Trucks																											
Other General Industrial Equip																											

Total per Phase																											
Site Preparation	0,178	0,028	1,144	0,121	0,002	0,004	0,004	221,157	0,071	1,317	0,211	8,671	0,913	0,018	0,028	0,028	1 665,884	0,538	3,951	0,632	26,014	2,738	0,053	0,084	0,084	4 997,7	1,613
Grading	0,178	0,028	1,144	0,121	0,002	0,004	0,004	221,157	0,071	1,087	0,172	7,156	0,747	0,014	0,023	0,023	1 364,663	0,440	6,521	1,035	42,934	4,485	0,086	0,138	0,138	8 188,0	2,643
Building Construction	0,000	0,000	0,000	0,000	0,000	0,000	0,000	0,000	0,000	0,000	0,000	0,000	0,000	0,000	0,000	0,000	0,000	0,000	0,000	0,000	0,000	0,000	0,000	0,000	0,000	0,0	0,000
Paving - Asphalt	0,107	0,024	1,082	0,127	0,002	0,003	0,003	182,007	0,057	0,755	0,168	7,784	0,876	0,014	0,022	0,022	1 297,870	0,411	7,546	1,677	77,840	8,756	0,138	0,218	0,218	12 978,7	4,111
Paving - Concrete	0,118	0,021	0,988	0,192	0,002	0,002	0,002	151,643	0,043	0,779	0,144	6,732	1,218	0,011	0,017	0,017	1 036,240	0,302	7,795	1,439	67,322	12,184	0,115	0,171	0,171	10 362,4	3,017
Site Preparation - Pond	0,000	0,000	0,000	0,000	0,000	0,000	0,000	0,000	0,000	0,000	0,000	0,000	0,000	0,000	0,000	0,000	0,000	0,000	0,000	0,000	0,000	0,000	0,000	0,000	0,000	0,0	0,000
Excavation	0,000	0,000	0,000	0,000	0,000	0,000	0,000	0,000	0,000	0,000	0,000	0,000	0,000	0,000	0,000	0,000	0,000	0,000	0,000	0,000	0,000	0,000	0,000	0,000	0,000	0,0	0,000
Total																			**25,813**	**4,784**	**214,110**	**28,163**	**0,392**	**0,611**	**0,611**	**36 526,7**	**11,384**

WPWMA EIR
Construction Emissions - Proposed Project Exhaust Emissions
Plan Concept 1

Shared Site Utilities

Construction Period:	01.01.2024	to		
Number of workers:		Duration (weeks):		

Off Road Equipment Type	Area Size	Number (ea)	Daily Hours	Annual Days Equipment Used
Demolition				
Scraper - CAT 657				
Water Truck - 4000 gal, 3 axle, 58000 gvw				
Site Preparation (2 ac)	***2 ac***	***3***	***23***	***3***
Graders	2	1	8	3
Tractors/Loaders/Backhoes	2	1	8	3
Rubber Tired Dozers	2	1	7	3
Scrapers	2	0	0	0
Grading (2 ac)	***2 ac***	***3***	***19***	***6***
Rubber Tired Dozers	2	1	6	6
Concrete/Industrial Saws	2	0	0	0
Tractors/Loaders/Backhoes	2	1	7	6
Graders	2	1	6	6
Excavators	2	0	0	0
Scrapers	2	0	0	0
Building Construction (0 ac)	***0 ac***	***0***	***0***	***0***
Cranes	0	0	0	0
Forklifts	0	0	0	0
Tractors/Loaders/Backhoes	0	0	0	0
Welders	0	0	0	0
Generator Sets	0	0	0	0
Paving - Asphalt (0 ac)	***0 ac***	***0***	***0***	***0***
Pavers	0	0	0	0
Cement and Mortar Mixers	0	0	0	0
Rollers	0	0	0	0
Tractors/Loaders/Backhoes	0	0	0	0
Paving Equipment	0	0	0	0
Paving - Concrete (0 ac)	***0 ac***	***0***	***0***	***0***
Pavers	0	0	0	0
Cement and Mortar Mixers	0	0	0	0
Rollers	0	0	0	0
Tractors/Loaders/Backhoes	0	0	0	0
Paving Equipment	0	0	0	0
Site Preparation - Pond (0 ac)	***0 ac***	***0***	***0***	***0***
Graders	0	0	0	0
Tractors/Loaders/Backhoes	0	0	0	0
Rubber Tired Dozers	0	0	0	0
Scrapers	0	0	0	0
Excavation (16000 cy)	***16000 cy***	***4***	***26***	***2***
Scrapers	16000	1	8	2
Rubber Tired Dozers	16000	1	8	2
Off-Highway Trucks	16000	1	8	2
Other General Industrial Equipment	16000	1	2	2

Area Size Reference Table	Size	Unit
Site Preparation	2	ac
Grading	2	ac
Building Construction	0	ac
Paving - Asphalt	0	ac
Paving - Concrete	0	ac
Site Preparation - Pond	0	ac
Excavation	16 000	cy

WPWMA EIR
Construction Emissions - Proposed Project Exhaust Emissions

Shared Site Utilities

Emission Factors					Emissions Factor (g/bhp-hr)								
Equipment Type	HorsePower	Load Factor	Construction Year	Year+Equipment Type+HorsePower	CO	NOX	PM10	PM2.5	ROG	TOG	SO2	CO2	CH4
Demolition													
Site Preparation (2 ac)													
Graders	187	0,41	2024	2024Graders250	2,20E+00	2,60E-01	8,00E-03	8,00E-03	6,00E-02	3,12E-01	5,00E-03	4,74E+02	1,53E-01
Tractors/Loaders/Backhoes	97	0,37	2024	2024Tractors/Loaders/Backhoes120	3,70E+00	2,60E-01	8,00E-03	8,00E-03	6,00E-02	2,71E-01	5,00E-03	4,77E+02	1,54E-01
Rubber Tired Dozers	247	0,4	2024	2024Rubber Tired Dozers250	2,20E+00	2,60E-01	8,00E-03	8,00E-03	6,00E-02	4,75E-01	5,00E-03	4,75E+02	1,53E-01
Scrapers													
Grading (2 ac)													
Rubber Tired Dozers	247	0,4	2024	2024Rubber Tired Dozers250	2,20E+00	2,60E-01	8,00E-03	8,00E-03	6,00E-02	4,75E-01	5,00E-03	4,75E+02	1,53E-01
Concrete/Industrial Saws													
Tractors/Loaders/Backhoes	97	0,37	2024	2024Tractors/Loaders/Backhoes120	3,70E+00	2,60E-01	8,00E-03	8,00E-03	6,00E-02	2,71E-01	5,00E-03	4,77E+02	1,54E-01
Graders	187	0,41	2024	2024Graders250	2,20E+00	2,60E-01	8,00E-03	8,00E-03	6,00E-02	3,12E-01	5,00E-03	4,74E+02	1,53E-01
Excavators													
Scrapers													
Building Construction (0 ac)													
Cranes													
Forklifts													
Tractors/Loaders/Backhoes													
Welders													
Generator Sets													
Paving - Asphalt (0 ac)													
Pavers													
Cement and Mortar Mixers													
Rollers													
Tractors/Loaders/Backhoes													
Paving Equipment													
Paving - Concrete (0 ac)													
Pavers													
Cement and Mortar Mixers													
Rollers													
Tractors/Loaders/Backhoes													
Paving Equipment													
Site Preparation - Pond (0 ac)													
Graders													
Tractors/Loaders/Backhoes													
Rubber Tired Dozers													
Scrapers													
Excavation (16000 cy)													
Scrapers	367	0,48	2024	2024Scrapers500	2,20E+00	2,60E-01	8,00E-03	8,00E-03	6,00E-02	2,91E-01	5,00E-03	4,73E+02	1,53E-01
Rubber Tired Dozers	247	0,4	2024	2024Rubber Tired Dozers250	2,20E+00	2,60E-01	8,00E-03	8,00E-03	6,00E-02	4,75E-01	5,00E-03	4,75E+02	1,53E-01
Off-Highway Trucks	402	0,38	2024	2024Off-Highway Trucks500	2,20E+00	2,60E-01	8,00E-03	8,00E-03	6,00E-02	2,20E-01	5,00E-03	4,75E+02	1,54E-01
Other General Industrial Equip	88	0,34	2024	2024Other General Industrial Equipmen	3,70E+00	2,60E-01	8,00E-03	8,00E-03	6,00E-02	3,42E-01	5,00E-03	4,70E+02	1,52E-01

WPWMA EIR
Construction Emissions - Proposed Project Exhaust Emissions

Shared Site Utilities

	Hourly Emissions (lb/hr)									Daily Emissions (lb/day)									Annual Emissions (lb/yr)								
Equipment Type	**TOG**	**ROG**	**CO**	**NOX**	**SO2**	**PM10**	**PM2.5**	**CO2**	**CH4**	**TOG**	**ROG**	**CO**	**NOX**	**SO2**	**PM10**	**PM2.5**	**CO2**	**CH4**	**TOG**	**ROG**	**CO**	**NOX**	**SO2**	**PM10**	**PM2.5**	**CO2**	**CH4**
Demolition																											
Site Preparation (2 ac)																											
Graders	0,053	0,010	0,372	0,044	0,001	0,001	0,001	80,064	0,026	0,422	0,081	2,975	0,352	0,007	0,011	0,011	640,508	0,207	1,266	0,243	8,925	1,055	0,020	0,032	0,032	1 921,5	0,621
Tractors/Loaders/Backhoes	0,021	0,005	0,293	0,021	0,000	0,001	0,001	37,721	0,012	0,171	0,038	2,342	0,165	0,003	0,005	0,005	301,767	0,097	0,514	0,114	7,026	0,494	0,009	0,015	0,015	905,3	0,292
Rubber Tired Dozers	0,103	0,013	0,479	0,057	0,001	0,002	0,002	103,373	0,033	0,724	0,091	3,354	0,396	0,008	0,012	0,012	723,609	0,233	2,171	0,274	10,063	1,189	0,023	0,037	0,037	2 170,8	0,700
Scrapers																											
Grading (2 ac)																											
Rubber Tired Dozers	0,103	0,013	0,479	0,057	0,001	0,002	0,002	103,373	0,033	0,620	0,078	2,875	0,340	0,007	0,010	0,010	620,236	0,200	3,722	0,470	17,251	2,039	0,039	0,063	0,063	3 721,4	1,200
Concrete/Industrial Saws																											
Tractors/Loaders/Backhoes	0,021	0,005	0,293	0,021	0,000	0,001	0,001	37,721	0,012	0,150	0,033	2,049	0,144	0,003	0,004	0,004	264,046	0,085	0,899	0,199	12,296	0,864	0,017	0,027	0,027	1 584,3	0,512
Graders	0,053	0,010	0,372	0,044	0,001	0,001	0,001	80,064	0,026	0,316	0,061	2,231	0,264	0,005	0,008	0,008	480,381	0,155	1,899	0,365	13,387	1,582	0,030	0,049	0,049	2 882,3	0,931
Excavators																											
Scrapers																											
Building Construction (0 ac)																											
Cranes																											
Forklifts																											
Tractors/Loaders/Backhoes																											
Welders																											
Generator Sets																											
Paving - Asphalt (0 ac)																											
Pavers																											
Cement and Mortar Mixers																											
Rollers																											
Tractors/Loaders/Backhoes																											
Paving Equipment																											
Paving - Concrete (0 ac)																											
Pavers																											
Cement and Mortar Mixers																											
Rollers																											
Tractors/Loaders/Backhoes																											
Paving Equipment																											
Site Preparation - Pond (0 ac)																											
Graders																											
Tractors/Loaders/Backhoes																											
Rubber Tired Dozers																											
Scrapers																											
Excavation (16000 cy)																											
Scrapers	0,113	0,023	0,854	0,101	0,002	0,003	0,003	183,637	0,059	0,905	0,186	6,835	0,808	0,016	0,025	0,025	1 469,099	0,475	1,809	0,373	13,671	1,616	0,031	0,050	0,050	2 938,2	0,951
Rubber Tired Dozers	0,103	0,013	0,479	0,057	0,001	0,002	0,002	103,373	0,033	0,827	0,105	3,834	0,453	0,009	0,014	0,014	826,982	0,267	1,654	0,209	7,667	0,906	0,017	0,028	0,028	1 654,0	0,533
Off-Highway Trucks	0,074	0,020	0,741	0,088	0,002	0,003	0,003	160,044	0,052	0,591	0,162	5,927	0,700	0,013	0,022	0,022	1 280,352	0,415	1,183	0,323	11,855	1,401	0,027	0,043	0,043	2 560,7	0,830
Other General Industrial Equip	0,023	0,004	0,244	0,017	0,000	0,001	0,001	31,002	0,010	0,045	0,008	0,488	0,034	0,001	0,001	0,001	62,005	0,020	0,090	0,016	0,976	0,069	0,001	0,002	0,002	124,0	0,040
Total per Phase																											
Site Preparation	0,178	0,028	1,144	0,121	0,002	0,004	0,004	221,157	0,071	1,317	0,211	8,671	0,913	0,018	0,028	0,028	1 665,884	0,538	3,951	0,632	26,014	2,738	0,053	0,084	0,084	4 997,7	1,613
Grading	0,178	0,028	1,144	0,121	0,002	0,004	0,004	221,157	0,071	1,087	0,172	7,156	0,747	0,014	0,023	0,023	1 364,663	0,440	6,521	1,035	42,934	4,485	0,086	0,138	0,138	8 188,0	2,643
Building Construction	0,000	0,000	0,000	0,000	0,000	0,000	0,000	0,000	0,000	0,000	0,000	0,000	0,000	0,000	0,000	0,000	0,000	0,000	0,000	0,000	0,000	0,000	0,000	0,000	0,000	0,0	0,000
Paving - Asphalt	0,000	0,000	0,000	0,000	0,000	0,000	0,000	0,000	0,000	0,000	0,000	0,000	0,000	0,000	0,000	0,000	0,000	0,000	0,000	0,000	0,000	0,000	0,000	0,000	0,000	0,0	0,000
Paving - Concrete	0,000	0,000	0,000	0,000	0,000	0,000	0,000	0,000	0,000	0,000	0,000	0,000	0,000	0,000	0,000	0,000	0,000	0,000	0,000	0,000	0,000	0,000	0,000	0,000	0,000	0,0	0,000
Site Preparation - Pond	0,000	0,000	0,000	0,000	0,000	0,000	0,000	0,000	0,000	0,000	0,000	0,000	0,000	0,000	0,000	0,000	0,000	0,000	0,000	0,000	0,000	0,000	0,000	0,000	0,000	0,0	0,000
Excavation	0,313	0,061	2,319	0,262	0,005	0,008	0,008	478,056	0,155	2,368	0,461	17,084	1,996	0,038	0,061	0,061	3 638,437	1,177	4,737	0,921	34,169	3,991	0,077	0,123	0,123	7 276,9	2,354
Total																			**15,208**	**2,588**	**103,117**	**11,214**	**0,216**	**0,345**	**0,345**	**20 462,5**	**6,609**

WPWMA EIR
Construction Emissions - Proposed Project Exhaust Emissions
Plan Concept 1

Compost Facility

Construction Period:	01.01.2025	to		
Number of workers:		Duration (weeks):		

Off Road Equipment Type	Area Size	Number (ea)	Daily Hours	Annual Days Equipment Used
Demolition				
Scraper - CAT 657				
Water Truck - 4000 gal, 3 axle, 58000 gvw				
Site Preparation (35 ac)	***35 ac***	***7***	***56***	***30***
Graders	35	0	0	0
Tractors/Loaders/Backhoes	35	4	8	30
Rubber Tired Dozers	35	3	8	30
Scrapers	35	0	0	0
Grading (35 ac)	***35 ac***	***8***	***64***	***75***
Rubber Tired Dozers	35	1	8	75
Concrete/Industrial Saws	35	0	0	0
Tractors/Loaders/Backhoes	35	2	8	75
Graders	35	1	8	75
Excavators	35	2	8	75
Scrapers	35	2	8	75
Building Construction (1 ac)	***1 ac***	***5***	***32***	***200***
Cranes	1	1	4	200
Forklifts	1	2	6	200
Tractors/Loaders/Backhoes	1	2	8	200
Welders	1	0	0	0
Generator Sets	1	0	0	0
Paving - Asphalt (0 ac)	***0 ac***	***0***	***0***	***0***
Pavers	0	0	0	0
Cement and Mortar Mixers	0	0	0	0
Rollers	0	0	0	0
Tractors/Loaders/Backhoes	0	0	0	0
Paving Equipment	0	0	0	0
Paving - Concrete (35 ac)	***35 ac***	***6***	***48***	***55***
Pavers	35	2	8	55
Cement and Mortar Mixers	35	0	0	0
Rollers	35	2	8	55
Tractors/Loaders/Backhoes	35	0	0	0
Paving Equipment	35	2	8	55
Site Preparation - Pond (5 ac)	***5 ac***	***7***	***56***	***10***
Graders	5	0	0	0
Tractors/Loaders/Backhoes	5	4	8	10
Rubber Tired Dozers	5	3	8	10
Scrapers	5	0	0	0
Excavation (31241 cy)	***31241 cy***	***4***	***26***	***3***
Scrapers	31241	1	8	3
Rubber Tired Dozers	31241	1	8	3
Off-Highway Trucks	31241	1	8	3
Other General Industrial Equipment	31241	1	2	3

Area Size Reference Table	Size	Unit
Site Preparation	35	ac
Grading	35	ac
Building Construction	1	ac
Paving - Asphalt	0	ac
Paving - Concrete	35	ac
Site Preparation - Pond	5	ac
Excavation	31 241	cy

WPWMA EIR
Construction Emissions - Proposed Project Exhaust Emissions

Compost Facility

Emission Factors					Emissions Factor (g/bhp-hr)								
Equipment Type	HorsePower	Load Factor	Construction Year	Year+Equipment Type+HorsePower	CO	NOX	PM10	PM2.5	ROG	TOG	SO2	CO2	CH4
Demolition													
Site Preparation (35 ac)													
Graders													
Tractors/Loaders/Backhoes	97	0,37	2025	2025Tractors/Loaders/Backhoes120	3,70E+00	2,60E-01	8,00E-03	8,00E-03	6,00E-02	2,48E-01	5,00E-03	4,77E+02	1,54E-01
Rubber Tired Dozers	247	0,4	2025	2025Rubber Tired Dozers250	2,20E+00	2,60E-01	8,00E-03	8,00E-03	6,00E-02	4,43E-01	5,00E-03	4,75E+02	1,53E-01
Scrapers													
Grading (35 ac)													
Rubber Tired Dozers	247	0,4	2025	2025Rubber Tired Dozers250	2,20E+00	2,60E-01	8,00E-03	8,00E-03	6,00E-02	4,43E-01	5,00E-03	4,75E+02	1,53E-01
Concrete/Industrial Saws													
Tractors/Loaders/Backhoes	97	0,37	2025	2025Tractors/Loaders/Backhoes120	3,70E+00	2,60E-01	8,00E-03	8,00E-03	6,00E-02	2,48E-01	5,00E-03	4,77E+02	1,54E-01
Graders	187	0,41	2025	2025Graders250	2,20E+00	2,60E-01	8,00E-03	8,00E-03	6,00E-02	2,74E-01	5,00E-03	4,73E+02	1,53E-01
Excavators	158	0,38	2025	2025Excavators175	2,20E+00	2,60E-01	8,00E-03	8,00E-03	6,00E-02	1,88E-01	5,00E-03	4,72E+02	1,53E-01
Scrapers	367	0,48	2025	2025Scrapers500	2,20E+00	2,60E-01	8,00E-03	8,00E-03	6,00E-02	2,57E-01	5,00E-03	4,73E+02	1,53E-01
Building Construction (1 ac)													
Cranes	231	0,29	2025	2025Cranes250	2,20E+00	2,60E-01	8,00E-03	8,00E-03	6,00E-02	3,15E-01	5,00E-03	4,73E+02	1,53E-01
Forklifts	89	0,2	2025	2025Forklifts120	3,70E+00	2,60E-01	8,00E-03	8,00E-03	6,00E-02	3,29E-01	5,00E-03	4,72E+02	1,53E-01
Tractors/Loaders/Backhoes	97	0,37	2025	2025Tractors/Loaders/Backhoes120	3,70E+00	2,60E-01	8,00E-03	8,00E-03	6,00E-02	2,48E-01	5,00E-03	4,77E+02	1,54E-01
Welders													
Generator Sets													
Paving - Asphalt (0 ac)													
Pavers													
Cement and Mortar Mixers													
Rollers													
Tractors/Loaders/Backhoes													
Paving Equipment													
Paving - Concrete (35 ac)													
Pavers	130	0,42	2025	2025Pavers175	2,20E+00	2,60E-01	8,00E-03	8,00E-03	6,00E-02	2,15E-01	5,00E-03	4,72E+02	1,53E-01
Cement and Mortar Mixers													
Rollers	80	0,38	2025	2025Rollers120	3,70E+00	2,60E-01	8,00E-03	8,00E-03	6,00E-02	3,04E-01	5,00E-03	4,74E+02	1,53E-01
Tractors/Loaders/Backhoes													
Paving Equipment	132	0,36	2025	2025Paving Equipment175	2,20E+00	2,60E-01	8,00E-03	8,00E-03	6,00E-02	2,08E-01	5,00E-03	4,70E+02	1,52E-01
Site Preparation - Pond (5 ac)													
Graders													
Tractors/Loaders/Backhoes	97	0,37	2025	2025Tractors/Loaders/Backhoes120	3,70E+00	2,60E-01	8,00E-03	8,00E-03	6,00E-02	2,48E-01	5,00E-03	4,77E+02	1,54E-01
Rubber Tired Dozers	247	0,4	2025	2025Rubber Tired Dozers250	2,20E+00	2,60E-01	8,00E-03	8,00E-03	6,00E-02	4,43E-01	5,00E-03	4,75E+02	1,53E-01
Scrapers													
Excavation (31241 cy)													
Scrapers	367	0,48	2025	2025Scrapers500	2,20E+00	2,60E-01	8,00E-03	8,00E-03	6,00E-02	2,57E-01	5,00E-03	4,73E+02	1,53E-01
Rubber Tired Dozers	247	0,4	2025	2025Rubber Tired Dozers250	2,20E+00	2,60E-01	8,00E-03	8,00E-03	6,00E-02	4,43E-01	5,00E-03	4,75E+02	1,53E-01
Off-Highway Trucks	402	0,38	2025	2025Off-Highway Trucks500	2,20E+00	2,60E-01	8,00E-03	8,00E-03	6,00E-02	2,11E-01	5,00E-03	4,75E+02	1,54E-01
Other General Industrial Equip	88	0,34	2025	2025Other General Industrial Equipmen	3,70E+00	2,60E-01	8,00E-03	8,00E-03	6,00E-02	3,06E-01	5,00E-03	4,70E+02	1,52E-01

WPWMA EIR
Construction Emissions - Proposed Project Exhaust Emissions

Compost Facility

	Hourly Emissions (lb/hr)									Daily Emissions (lb/day)									Annual Emissions (lb/yr)								
Equipment Type	**TOG**	**ROG**	**CO**	**NOX**	**SO2**	**PM10**	**PM2.5**	**CO2**	**CH4**	**TOG**	**ROG**	**CO**	**NOX**	**SO2**	**PM10**	**PM2.5**	**CO2**	**CH4**	**TOG**	**ROG**	**CO**	**NOX**	**SO2**	**PM10**	**PM2.5**	**CO2**	**CH4**
Demolition																											
Site Preparation (35 ac)																											
Graders																											
Tractors/Loaders/Backhoes	0,079	0,019	1,171	0,082	0,002	0,003	0,003	151,028	0,049	0,629	0,152	9,368	0,658	0,013	0,020	0,020	1 208,224	0,390	18,869	4,558	281,048	19,749	0,380	0,608	0,608	36 246,7	11,698
Rubber Tired Dozers	0,289	0,039	1,438	0,170	0,003	0,005	0,005	310,110	0,100	2,314	0,314	11,501	1,359	0,026	0,042	0,042	2 480,882	0,800	69,413	9,410	345,022	40,775	0,784	1,255	1,255	74 426,5	23,995
Scrapers																											
Grading (35 ac)																											
Rubber Tired Dozers	0,096	0,013	0,479	0,057	0,001	0,002	0,002	103,370	0,033	0,771	0,105	3,834	0,453	0,009	0,014	0,014	826,961	0,267	57,844	7,841	287,518	33,979	0,653	1,046	1,046	62 022,1	19,996
Concrete/Industrial Saws																											
Tractors/Loaders/Backhoes	0,039	0,009	0,586	0,041	0,001	0,001	0,001	75,514	0,024	0,314	0,076	4,684	0,329	0,006	0,010	0,010	604,112	0,195	23,586	5,697	351,310	24,687	0,475	0,760	0,760	45 308,4	14,622
Graders	0,046	0,010	0,372	0,044	0,001	0,001	0,001	80,030	0,026	0,370	0,081	2,975	0,352	0,007	0,011	0,011	640,240	0,207	27,767	6,085	223,118	26,368	0,507	0,811	0,811	48 018,0	15,517
Excavators	0,050	0,016	0,582	0,069	0,001	0,002	0,002	125,085	0,041	0,398	0,127	4,659	0,551	0,011	0,017	0,017	1 000,677	0,324	29,832	9,530	349,445	41,298	0,794	1,271	1,271	75 050,8	24,302
Scrapers	0,200	0,047	1,709	0,202	0,004	0,006	0,006	367,037	0,119	1,599	0,373	13,671	1,616	0,031	0,050	0,050	2 936,297	0,951	119,925	27,962	1 025,288	121,170	2,330	3,728	3,728	220 222,2	71,304
Building Construction (1 ac)																											
Cranes	0,047	0,009	0,325	0,038	0,001	0,001	0,001	69,853	0,023	0,186	0,035	1,300	0,154	0,003	0,005	0,005	279,413	0,090	37,227	7,089	259,931	30,719	0,591	0,945	0,945	55 882,7	18,077
Forklifts	0,026	0,005	0,290	0,020	0,000	0,001	0,001	37,008	0,012	0,155	0,028	1,742	0,122	0,002	0,004	0,004	222,046	0,072	31,022	5,651	348,472	24,487	0,471	0,753	0,753	44 409,3	14,410
Tractors/Loaders/Backhoes	0,039	0,009	0,586	0,041	0,001	0,001	0,001	75,514	0,024	0,314	0,076	4,684	0,329	0,006	0,010	0,010	604,112	0,195	62,897	15,192	936,828	65,831	1,266	2,026	2,026	120 822,4	38,992
Welders																											
Generator Sets																											
Paving - Asphalt (0 ac)																											
Pavers																											
Cement and Mortar Mixers																											
Rollers																											
Tractors/Loaders/Backhoes																											
Paving Equipment																											
Paving - Concrete (35 ac)																											
Pavers	0,052	0,014	0,530	0,063	0,001	0,002	0,002	113,748	0,037	0,414	0,116	4,237	0,501	0,010	0,015	0,015	909,987	0,295	22,753	6,356	233,041	27,541	0,530	0,847	0,847	50 049,3	16,207
Cement and Mortar Mixers																											
Rollers	0,041	0,008	0,496	0,035	0,001	0,001	0,001	63,516	0,021	0,326	0,064	3,968	0,279	0,005	0,009	0,009	508,124	0,164	17,929	3,539	218,219	15,334	0,295	0,472	0,472	27 946,8	9,024
Tractors/Loaders/Backhoes																											
Paving Equipment	0,044	0,013	0,461	0,054	0,001	0,002	0,002	98,579	0,032	0,349	0,101	3,688	0,436	0,008	0,013	0,013	788,635	0,255	19,219	5,532	202,823	23,970	0,461	0,738	0,738	43 374,9	14,013
Site Preparation - Pond (5 ac)																											
Graders																											
Tractors/Loaders/Backhoes	0,079	0,019	1,171	0,082	0,002	0,003	0,003	151,028	0,049	0,629	0,152	9,368	0,658	0,013	0,020	0,020	1 208,224	0,390	6,290	1,519	93,683	6,583	0,127	0,203	0,203	12 082,2	3,899
Rubber Tired Dozers	0,289	0,039	1,438	0,170	0,003	0,005	0,005	310,110	0,100	2,314	0,314	11,501	1,359	0,026	0,042	0,042	2 480,882	0,800	23,138	3,137	115,007	13,592	0,261	0,418	0,418	24 808,8	7,998
Scrapers																											
Excavation (31241 cy)																											
Scrapers	0,100	0,023	0,854	0,101	0,002	0,003	0,003	183,519	0,059	0,800	0,186	6,835	0,808	0,016	0,025	0,025	1 468,148	0,475	2,399	0,559	20,506	2,423	0,047	0,075	0,075	4 404,4	1,426
Rubber Tired Dozers	0,096	0,013	0,479	0,057	0,001	0,002	0,002	103,370	0,033	0,771	0,105	3,834	0,453	0,009	0,014	0,014	826,961	0,267	2,314	0,314	11,501	1,359	0,026	0,042	0,042	2 480,9	0,800
Off-Highway Trucks	0,071	0,020	0,741	0,088	0,002	0,003	0,003	159,960	0,052	0,568	0,162	5,927	0,700	0,013	0,022	0,022	1 279,676	0,415	1,705	0,485	17,782	2,101	0,040	0,065	0,065	3 839,0	1,245
Other General Industrial Equip	0,020	0,004	0,244	0,017	0,000	0,001	0,001	31,002	0,010	0,040	0,008	0,488	0,034	0,001	0,001	0,001	62,005	0,020	0,121	0,024	1,464	0,103	0,002	0,003	0,003	186,0	0,060
Total per Phase																											
Site Preparation	0,368	0,058	2,609	0,252	0,005	0,008	0,008	461,138	0,149	2,943	0,466	20,869	2,017	0,039	0,062	0,062	3 689,107	1,190	88,282	13,967	626,070	60,525	1,164	1,862	1,862	110 673,2	35,692
Grading	0,432	0,095	3,728	0,413	0,008	0,013	0,013	751,036	0,243	3,453	0,762	29,822	3,300	0,063	0,102	0,102	6 008,286	1,943	258,954	57,116	2 236,680	247,503	4,760	7,615	7,615	450 621,5	145,741
Building Construction	0,112	0,023	1,201	0,100	0,002	0,003	0,003	182,375	0,059	0,656	0,140	7,726	0,605	0,012	0,019	0,019	1 105,572	0,357	131,146	27,932	1 545,230	121,037	2,328	3,724	3,724	221 114,4	71,479
Paving - Asphalt	0,000	0,000	0,000	0,000	0,000	0,000	0,000	0,000	0,000	0,000	0,000	0,000	0,000	0,000	0,000	0,000	0,000	0,000	0,000	0,000	0,000	0,000	0,000	0,000	0,000	0,0	0,000
Paving - Concrete	0,136	0,035	1,487	0,152	0,003	0,005	0,005	275,843	0,089	1,089	0,280	11,892	1,215	0,023	0,037	0,037	2 206,747	0,714	59,901	15,426	654,083	66,845	1,285	2,057	2,057	121 371,1	39,244
Site Preparation - Pond	0,368	0,058	2,609	0,252	0,005	0,008	0,008	461,138	0,149	2,943	0,466	20,869	2,017	0,039	0,062	0,062	3 689,107	1,190	29,427	4,656	208,690	20,175	0,388	0,621	0,621	36 891,1	11,897
Excavation	0,288	0,061	2,319	0,262	0,005	0,008	0,008	477,850	0,155	2,180	0,461	17,084	1,996	0,038	0,061	0,061	3 636,790	1,177	6,539	1,382	51,253	5,987	0,115	0,184	0,184	10 910,4	3,531
Total																			**574,248**	**120,478**	**5 322,006**	**522,072**	**10,040**	**16,064**	**16,064**	**951 581,6**	**307,584**

WPWMA EIR
Construction Emissions - Proposed Project Exhaust Emissions
Plan Concept 1

Landfill Construction

Construction Period:	01.01.2028	to		
Number of workers:		Duration (weeks):		

Off Road Equipment Type	Area Size	Number (ea)	Daily Hours	Annual Days Equipment Used
Demolition				
Scraper - CAT 657				
Water Truck - 4000 gal, 3 axle, 58000 gvw				
Site Preparation (18,11 ac)	***18 ac***	***7***	***56***	***10***
Graders	18	0	0	0
Tractors/Loaders/Backhoes	18	4	8	10
Rubber Tired Dozers	18	3	8	10
Scrapers	18	0	0	0
Grading (18,11 ac)	***18 ac***	***8***	***64***	***30***
Rubber Tired Dozers	18	1	8	30
Concrete/Industrial Saws	18	0	0	0
Tractors/Loaders/Backhoes	18	2	8	30
Graders	18	1	8	30
Excavators	18	2	8	30
Scrapers	18	2	8	30
Building Construction (0 ac)	***0 ac***	***0***	***0***	***0***
Cranes	0	0	0	0
Forklifts	0	0	0	0
Tractors/Loaders/Backhoes	0	0	0	0
Welders	0	0	0	0
Generator Sets	0	0	0	0
Paving - Asphalt (0 ac)	***0 ac***	***0***	***0***	***0***
Pavers	0	0	0	0
Cement and Mortar Mixers	0	0	0	0
Rollers	0	0	0	0
Tractors/Loaders/Backhoes	0	0	0	0
Paving Equipment	0	0	0	0
Paving - Concrete (0 ac)	***0 ac***	***0***	***0***	***0***
Pavers	0	0	0	0
Cement and Mortar Mixers	0	0	0	0
Rollers	0	0	0	0
Tractors/Loaders/Backhoes	0	0	0	0
Paving Equipment	0	0	0	0
Site Preparation - Pond (0 ac)	***0 ac***	***0***	***0***	***0***
Graders	0	0	0	0
Tractors/Loaders/Backhoes	0	0	0	0
Rubber Tired Dozers	0	0	0	0
Scrapers	0	0	0	0
Excavation (1835000 cy)	***1835000 cy***	***24***	***120***	***175***
Scrapers	1835000	6	8	175
Rubber Tired Dozers	1835000	3	8	175
Off-Highway Trucks	1835000	3	8	175
Other General Industrial Equipment	1835000	12	2	175

Area Size Reference Table	Size	Unit
Site Preparation	18	ac
Grading	18	ac
Building Construction	0	ac
Paving - Asphalt	0	ac
Paving - Concrete	0	ac
Site Preparation - Pond	0	ac
Excavation	1 835 000	cy

WPWMA EIR
Construction Emissions - Proposed Project Exhaust Emissions

Landfill Construction

Emission Factors					Emissions Factor (g/bhp-hr)								
Equipment Type	HorsePower	Load Factor	Construction Year	Year+Equipment Type+HorsePower	CO	NOX	PM10	PM2.5	ROG	TOG	SO2	CO2	CH4
Demolition													
Site Preparation (18,11 ac)													
Graders													
Tractors/Loaders/Backhoes	97	0,37	2028	2025Tractors/Loaders/Backhoes120	3,70E+00	2,60E-01	8,00E-03	8,00E-03	6,00E-02	2,48E-01	5,00E-03	4,77E+02	1,54E-01
Rubber Tired Dozers	247	0,4	2028	2025Rubber Tired Dozers250	2,20E+00	2,60E-01	8,00E-03	8,00E-03	6,00E-02	4,43E-01	5,00E-03	4,75E+02	1,53E-01
Scrapers													
Grading (18,11 ac)													
Rubber Tired Dozers	247	0,4	2028	2025Rubber Tired Dozers250	2,20E+00	2,60E-01	8,00E-03	8,00E-03	6,00E-02	4,43E-01	5,00E-03	4,75E+02	1,53E-01
Concrete/Industrial Saws													
Tractors/Loaders/Backhoes	97	0,37	2028	2025Tractors/Loaders/Backhoes120	3,70E+00	2,60E-01	8,00E-03	8,00E-03	6,00E-02	2,48E-01	5,00E-03	4,77E+02	1,54E-01
Graders	187	0,41	2028	2025Graders250	2,20E+00	2,60E-01	8,00E-03	8,00E-03	6,00E-02	2,74E-01	5,00E-03	4,73E+02	1,53E-01
Excavators	158	0,38	2028	2025Excavators175	2,20E+00	2,60E-01	8,00E-03	8,00E-03	6,00E-02	1,88E-01	5,00E-03	4,72E+02	1,53E-01
Scrapers	367	0,48	2028	2025Scrapers500	2,20E+00	2,60E-01	8,00E-03	8,00E-03	6,00E-02	2,57E-01	5,00E-03	4,73E+02	1,53E-01
Building Construction (0 ac)													
Cranes													
Forklifts													
Tractors/Loaders/Backhoes													
Welders													
Generator Sets													
Paving - Asphalt (0 ac)													
Pavers													
Cement and Mortar Mixers													
Rollers													
Tractors/Loaders/Backhoes													
Paving Equipment													
Paving - Concrete (0 ac)													
Pavers													
Cement and Mortar Mixers													
Rollers													
Tractors/Loaders/Backhoes													
Paving Equipment													
Site Preparation - Pond (0 ac)													
Graders													
Tractors/Loaders/Backhoes													
Rubber Tired Dozers													
Scrapers													
Excavation (1835000 cy)													
Scrapers	367	0,48	2028	2025Scrapers500	2,20E+00	2,60E-01	8,00E-03	8,00E-03	6,00E-02	2,57E-01	5,00E-03	4,73E+02	1,53E-01
Rubber Tired Dozers	247	0,4	2028	2025Rubber Tired Dozers250	2,20E+00	2,60E-01	8,00E-03	8,00E-03	6,00E-02	4,43E-01	5,00E-03	4,75E+02	1,53E-01
Off-Highway Trucks	402	0,38	2028	2025Off-Highway Trucks500	2,20E+00	2,60E-01	8,00E-03	8,00E-03	6,00E-02	2,11E-01	5,00E-03	4,75E+02	1,54E-01
Other General Industrial Equip	88	0,34	2028	2025Other General Industrial Equipmen	3,70E+00	2,60E-01	8,00E-03	8,00E-03	6,00E-02	3,06E-01	5,00E-03	4,70E+02	1,52E-01

WPWMA EIR
Construction Emissions - Proposed Project Exhaust Emissions

Landfill Construction

	Hourly Emissions (lb/hr)									Daily Emissions (lb/day)									Annual Emissions (lb/yr)								
Equipment Type	**TOG**	**ROG**	**CO**	**NOX**	**SO2**	**PM10**	**PM2.5**	**CO2**	**CH4**	**TOG**	**ROG**	**CO**	**NOX**	**SO2**	**PM10**	**PM2.5**	**CO2**	**CH4**	**TOG**	**ROG**	**CO**	**NOX**	**SO2**	**PM10**	**PM2.5**	**CO2**	**CH4**
Demolition																											
Site Preparation (18,11 ac)																											
Graders																											
Tractors/Loaders/Backhoes	0,079	0,019	1,171	0,082	0,002	0,003	0,003	151,028	0,049	0,629	0,152	9,368	0,658	0,013	0,020	0,020	1 208,224	0,390	6,290	1,519	93,683	6,583	0,127	0,203	0,203	12 082,2	3,899
Rubber Tired Dozers	0,289	0,039	1,438	0,170	0,003	0,005	0,005	310,110	0,100	2,314	0,314	11,501	1,359	0,026	0,042	0,042	2 480,882	0,800	23,138	3,137	115,007	13,592	0,261	0,418	0,418	24 808,8	7,998
Scrapers																											
Grading (18,11 ac)																											
Rubber Tired Dozers	0,096	0,013	0,479	0,057	0,001	0,002	0,002	103,370	0,033	0,771	0,105	3,834	0,453	0,009	0,014	0,014	826,961	0,267	23,138	3,137	115,007	13,592	0,261	0,418	0,418	24 808,8	7,998
Concrete/Industrial Saws																											
Tractors/Loaders/Backhoes	0,039	0,009	0,586	0,041	0,001	0,001	0,001	75,514	0,024	0,314	0,076	4,684	0,329	0,006	0,010	0,010	604,112	0,195	9,435	2,279	140,524	9,875	0,190	0,304	0,304	18 123,4	5,849
Graders	0,046	0,010	0,372	0,044	0,001	0,001	0,001	80,030	0,026	0,370	0,081	2,975	0,352	0,007	0,011	0,011	640,240	0,207	11,107	2,434	89,247	10,547	0,203	0,325	0,325	19 207,2	6,207
Excavators	0,050	0,016	0,582	0,069	0,001	0,002	0,002	125,085	0,041	0,398	0,127	4,659	0,551	0,011	0,017	0,017	1 000,677	0,324	11,933	3,812	139,778	16,519	0,318	0,508	0,508	30 020,3	9,721
Scrapers	0,200	0,047	1,709	0,202	0,004	0,006	0,006	367,037	0,119	1,599	0,373	13,671	1,616	0,031	0,050	0,050	2 936,297	0,951	47,970	11,185	410,115	48,468	0,932	1,491	1,491	88 088,9	28,522
Building Construction (0 ac)																											
Cranes																											
Forklifts																											
Tractors/Loaders/Backhoes																											
Welders																											
Generator Sets																											
Paving - Asphalt (0 ac)																											
Pavers																											
Cement and Mortar Mixers																											
Rollers																											
Tractors/Loaders/Backhoes																											
Paving Equipment																											
Paving - Concrete (0 ac)																											
Pavers																											
Cement and Mortar Mixers																											
Rollers																											
Tractors/Loaders/Backhoes																											
Paving Equipment																											
Site Preparation - Pond (0 ac)																											
Graders																											
Tractors/Loaders/Backhoes																											
Rubber Tired Dozers																											
Scrapers																											
Excavation (1835000 cy)																											
Scrapers	0,600	0,140	5,126	0,606	0,012	0,019	0,019	1 101,111	0,357	4,797	1,118	41,012	4,847	0,093	0,149	0,149	8 808,890	2,852	839,476	195,737	7 177,015	848,193	16,311	26,098	26,098	1 541 555,7	499,129
Rubber Tired Dozers	0,289	0,039	1,438	0,170	0,003	0,005	0,005	310,110	0,100	2,314	0,314	11,501	1,359	0,026	0,042	0,042	2 480,882	0,800	404,909	54,890	2 012,628	237,856	4,574	7,319	7,319	434 154,4	139,969
Off-Highway Trucks	0,213	0,061	2,223	0,263	0,005	0,008	0,008	479,879	0,156	1,705	0,485	17,782	2,101	0,040	0,065	0,065	3 839,029	1,245	298,389	84,868	3 111,833	367,762	7,072	11,316	11,316	671 830,1	217,828
Other General Industrial Equip	0,243	0,047	2,929	0,206	0,004	0,006	0,006	372,028	0,120	0,485	0,095	5,857	0,412	0,008	0,013	0,013	744,055	0,241	84,885	16,623	1 025,055	72,031	1,385	2,216	2,216	130 209,6	42,110
Total per Phase																											
Site Preparation	0,368	0,058	2,609	0,252	0,005	0,008	0,008	461,138	0,149	2,943	0,466	20,869	2,017	0,039	0,062	0,062	3 689,107	1,190	29,427	4,656	208,690	20,175	0,388	0,621	0,621	36 891,1	11,897
Grading	0,432	0,095	3,728	0,413	0,008	0,013	0,013	751,036	0,243	3,453	0,762	29,822	3,300	0,063	0,102	0,102	6 008,286	1,943	103,582	22,846	894,672	99,001	1,904	3,046	3,046	180 248,6	58,296
Building Construction	0,000	0,000	0,000	0,000	0,000	0,000	0,000	0,000	0,000	0,000	0,000	0,000	0,000	0,000	0,000	0,000	0,000	0,000	0,000	0,000	0,000	0,000	0,000	0,000	0,000	0,0	0,000
Paving - Asphalt	0,000	0,000	0,000	0,000	0,000	0,000	0,000	0,000	0,000	0,000	0,000	0,000	0,000	0,000	0,000	0,000	0,000	0,000	0,000	0,000	0,000	0,000	0,000	0,000	0,000	0,0	0,000
Paving - Concrete	0,000	0,000	0,000	0,000	0,000	0,000	0,000	0,000	0,000	0,000	0,000	0,000	0,000	0,000	0,000	0,000	0,000	0,000	0,000	0,000	0,000	0,000	0,000	0,000	0,000	0,0	0,000
Site Preparation - Pond	0,000	0,000	0,000	0,000	0,000	0,000	0,000	0,000	0,000	0,000	0,000	0,000	0,000	0,000	0,000	0,000	0,000	0,000	0,000	0,000	0,000	0,000	0,000	0,000	0,000	0,0	0,000
Excavation	1,345	0,287	11,715	1,244	0,024	0,038	0,038	2 263,128	0,732	9,301	2,012	76,152	8,719	0,168	0,268	0,268	########	5,137	1 627,659	352,117	13 326,531	1 525,842	29,343	46,949	46,949	2 777 749,9	899,037
Total																			**1 760,668**	**379,619**	**14 429,893**	**1 645,018**	**31,635**	**50,616**	**50,616**	**2 994 889,6**	**969,230**

WPWMA EIR
Construction Emissions - Proposed Project Exhaust Emissions
Plan Concept 1

Landfill Lining & Partial Closure

Construction Period:	01.01.2029	to		
Number of workers:		Duration (weeks):		

Off Road Equipment Type	Area Size	Number (ea)	Daily Hours	Annual Days Equipment Used
Demolition				
Scraper - CAT 657				
Water Truck - 4000 gal, 3 axle, 58000 gvw				
Site Preparation (0 ac)	***0 ac***	***0***	***0***	***0***
Graders	0	0	0	0
Tractors/Loaders/Backhoes	0	0	0	0
Rubber Tired Dozers	0	0	0	0
Scrapers	0	0	0	0
Grading (0 ac)	***0 ac***	***0***	***0***	***0***
Rubber Tired Dozers	0	0	0	0
Concrete/Industrial Saws	0	0	0	0
Tractors/Loaders/Backhoes	0	0	0	0
Graders	0	0	0	0
Excavators	0	0	0	0
Scrapers	0	0	0	0
Building Construction (0 ac)	***0 ac***	***0***	***0***	***0***
Cranes	0	0	0	0
Forklifts	0	0	0	0
Tractors/Loaders/Backhoes	0	0	0	0
Welders	0	0	0	0
Generator Sets	0	0	0	0
Paving - Asphalt (0 ac)	***0 ac***	***0***	***0***	***0***
Pavers	0	0	0	0
Cement and Mortar Mixers	0	0	0	0
Rollers	0	0	0	0
Tractors/Loaders/Backhoes	0	0	0	0
Paving Equipment	0	0	0	0
Paving - Concrete (0 ac)	***0 ac***	***0***	***0***	***0***
Pavers	0	0	0	0
Cement and Mortar Mixers	0	0	0	0
Rollers	0	0	0	0
Tractors/Loaders/Backhoes	0	0	0	0
Paving Equipment	0	0	0	0
Site Preparation - Pond (0 ac)	***0 ac***	***0***	***0***	***0***
Graders	0	0	0	0
Tractors/Loaders/Backhoes	0	0	0	0
Rubber Tired Dozers	0	0	0	0
Scrapers	0	0	0	0
Excavation (131750,25 cy)	***131750 cy***	***4***	***26***	***13***
Scrapers	131750	1	8	13
Rubber Tired Dozers	131750	1	8	13
Off-Highway Trucks	131750	1	8	13
Other General Industrial Equipment	131750	1	2	13
Lining & Partial Closure (18,11 ac)	***18 ac***	***44***	***216***	***175***
Scrapers	18	2	8	175
Scrapers	18	1	8	175
Off-Highway Trucks	18	2	8	175
Rubber Tired Dozers	18	1	8	175
Rubber Tired Dozers	18	1	8	175
Rollers	18	1	4	175
Graders	18	1	8	175
Bore/Drill Rigs	18	1	8	175
Tractors/Loaders/Backhoes	18	2	6	175
Off-Highway Trucks	18	2	8	175
Off-Highway Trucks	18	1	8	175
Excavators	18	1	8	175
Forklifts	18	2	4	175
Other General Industrial Equipment	18	20	2	175
Generator Sets	18	6	8	175

Area Size Reference Table	Size	Unit
Site Preparation	0	ac
Grading	0	ac
Building Construction	0	ac
Paving - Asphalt	0	ac
Paving - Concrete	0	ac
Site Preparation - Pond	0	ac
Excavation	131 750	cy
Lining & Partial Closure	18	ac

WPWMA EIR
Construction Emissions - Proposed Project Exhaust Emissions

Landfill Lining & Partial Closure

Emission Factors					Emissions Factor (g/bhp-hr)								
Equipment Type	HorsePower	Load Factor	Construction Year	Year+Equipment Type+HorsePower	CO	NOX	PM10	PM2.5	ROG	TOG	SO2	CO2	CH4
Demolition													
Site Preparation (0 ac)													
Graders													
Tractors/Loaders/Backhoes													
Rubber Tired Dozers													
Scrapers													
Grading (0 ac)													
Rubber Tired Dozers													
Concrete/Industrial Saws													
Tractors/Loaders/Backhoes													
Graders													
Excavators													
Scrapers													
Building Construction (0 ac)													
Cranes													
Forklifts													
Tractors/Loaders/Backhoes													
Welders													
Generator Sets													
Paving - Asphalt (0 ac)													
Pavers													
Cement and Mortar Mixers													
Rollers													
Tractors/Loaders/Backhoes													
Paving Equipment													
Paving - Concrete (0 ac)													
Pavers													
Cement and Mortar Mixers													
Rollers													
Tractors/Loaders/Backhoes													
Paving Equipment													
Site Preparation - Pond (0 ac)													
Graders													
Tractors/Loaders/Backhoes													
Rubber Tired Dozers													
Scrapers													
Excavation (131750,25 cy)													
Scrapers	367	0,48	2029	2025Scrapers500	2,20E+00	2,60E-01	8,00E-03	8,00E-03	6,00E-02	2,57E-01	5,00E-03	4,73E+02	1,53E-01
Rubber Tired Dozers	247	0,4	2029	2025Rubber Tired Dozers250	2,20E+00	2,60E-01	8,00E-03	8,00E-03	6,00E-02	4,43E-01	5,00E-03	4,75E+02	1,53E-01
Off-Highway Trucks	402	0,38	2029	2025Off-Highway Trucks500	2,20E+00	2,60E-01	8,00E-03	8,00E-03	6,00E-02	2,11E-01	5,00E-03	4,75E+02	1,54E-01
Other General Industrial Equip	88	0,34	2029	2025Other General Industrial Equipmen	3,70E+00	2,60E-01	8,00E-03	8,00E-03	6,00E-02	3,06E-01	5,00E-03	4,70E+02	1,52E-01
Lining & Partial Closure (18,11 ac)													
Scrapers	367	0,48	2029	2025Scrapers500	2,20E+00	2,60E-01	8,00E-03	8,00E-03	6,00E-02	2,57E-01	5,00E-03	4,73E+02	1,53E-01
Scrapers	367	0,48	2029	2025Scrapers500	2,20E+00	2,60E-01	8,00E-03	8,00E-03	6,00E-02	2,57E-01	5,00E-03	4,73E+02	1,53E-01
Off-Highway Trucks	402	0,38	2029	2025Off-Highway Trucks500	2,20E+00	2,60E-01	8,00E-03	8,00E-03	6,00E-02	2,11E-01	5,00E-03	4,75E+02	1,54E-01
Rubber Tired Dozers	247	0,4	2029	2025Rubber Tired Dozers250	2,20E+00	2,60E-01	8,00E-03	8,00E-03	6,00E-02	4,43E-01	5,00E-03	4,75E+02	1,53E-01
Rubber Tired Dozers	247	0,4	2029	2025Rubber Tired Dozers250	2,20E+00	2,60E-01	8,00E-03	8,00E-03	6,00E-02	4,43E-01	5,00E-03	4,75E+02	1,53E-01
Rollers	80	0,38	2029	2025Rollers120	3,70E+00	2,60E-01	8,00E-03	8,00E-03	6,00E-02	3,04E-01	5,00E-03	4,74E+02	1,53E-01
Graders	187	0,41	2029	2025Graders250	2,20E+00	2,60E-01	8,00E-03	8,00E-03	6,00E-02	2,74E-01	5,00E-03	4,73E+02	1,53E-01
Bore/Drill Rigs	221	0,5	2029	2025Bore/Drill Rigs250	2,20E+00	2,60E-01	8,00E-03	8,00E-03	6,00E-02	1,28E-01	5,00E-03	4,71E+02	1,52E-01
Tractors/Loaders/Backhoes	97	0,37	2029	2025Tractors/Loaders/Backhoes120	3,70E+00	2,60E-01	8,00E-03	8,00E-03	6,00E-02	2,48E-01	5,00E-03	4,77E+02	1,54E-01
Off-Highway Trucks	402	0,38	2029	2025Off-Highway Trucks500	2,20E+00	2,60E-01	8,00E-03	8,00E-03	6,00E-02	2,11E-01	5,00E-03	4,75E+02	1,54E-01
Off-Highway Trucks	402	0,38	2029	2025Off-Highway Trucks500	2,20E+00	2,60E-01	8,00E-03	8,00E-03	6,00E-02	2,11E-01	5,00E-03	4,75E+02	1,54E-01
Excavators	158	0,38	2029	2025Excavators175	2,20E+00	2,60E-01	8,00E-03	8,00E-03	6,00E-02	1,88E-01	5,00E-03	4,72E+02	1,53E-01
Forklifts	89	0,2	2029	2025Forklifts120	3,70E+00	2,60E-01	8,00E-03	8,00E-03	6,00E-02	3,29E-01	5,00E-03	4,72E+02	1,53E-01
Other General Industrial Equip	88	0,34	2029	2025Other General Industrial Equipmen	3,70E+00	2,60E-01	8,00E-03	8,00E-03	6,00E-02	3,06E-01	5,00E-03	4,70E+02	1,52E-01
Generator Sets	84	0,74	2029	2025Generator Sets120	3,70E+00	2,60E-01	8,00E-03	8,00E-03	6,00E-02	4,94E+00	6,00E-03	5,68E+02	2,10E-02

WPWMA EIR
Construction Emissions - Proposed Project Exhaust Emissions

Landfill Lining & Partial Closure

	Hourly Emissions (lb/hr)									Daily Emissions (lb/day)									Annual Emissions (lb/yr)								
Equipment Type	**TOG**	**ROG**	**CO**	**NOX**	**SO2**	**PM10**	**PM2.5**	**CO2**	**CH4**	**TOG**	**ROG**	**CO**	**NOX**	**SO2**	**PM10**	**PM2.5**	**CO2**	**CH4**	**TOG**	**ROG**	**CO**	**NOX**	**SO2**	**PM10**	**PM2.5**	**CO2**	**CH4**
Demolition																											
Site Preparation (0 ac)																											
Graders																											
Tractors/Loaders/Backhoes																											
Rubber Tired Dozers																											
Scrapers																											
Grading (0 ac)																											
Rubber Tired Dozers																											
Concrete/Industrial Saws																											
Tractors/Loaders/Backhoes																											
Graders																											
Excavators																											
Scrapers																											
Building Construction (0 ac)																											
Cranes																											
Forklifts																											
Tractors/Loaders/Backhoes																											
Welders																											
Generator Sets																											
Paving - Asphalt (0 ac)																											
Pavers																											
Cement and Mortar Mixers																											
Rollers																											
Tractors/Loaders/Backhoes																											
Paving Equipment																											
Paving - Concrete (0 ac)																											
Pavers																											
Cement and Mortar Mixers																											
Rollers																											
Tractors/Loaders/Backhoes																											
Paving Equipment																											
Site Preparation - Pond (0 ac)																											
Graders																											
Tractors/Loaders/Backhoes																											
Rubber Tired Dozers																											
Scrapers																											
Excavation (131750,25 cy)																											
Scrapers	0,100	0,023	0,854	0,101	0,002	0,003	0,003	183,519	0,059	0,800	0,186	6,835	0,808	0,016	0,025	0,025	1 468,148	0,475	10,394	2,423	88,858	10,501	0,202	0,323	0,323	19 085,9	6,180
Rubber Tired Dozers	0,096	0,013	0,479	0,057	0,001	0,002	0,002	103,370	0,033	0,771	0,105	3,834	0,453	0,009	0,014	0,014	826,961	0,267	10,026	1,359	49,837	5,890	0,113	0,181	0,181	10 750,5	3,466
Off-Highway Trucks	0,071	0,020	0,741	0,088	0,002	0,003	0,003	159,960	0,052	0,568	0,162	5,927	0,700	0,013	0,022	0,022	1 279,676	0,415	7,389	2,101	77,055	9,106	0,175	0,280	0,280	16 635,8	5,394
Other General Industrial Equip	0,020	0,004	0,244	0,017	0,000	0,001	0,001	31,002	0,010	0,040	0,008	0,488	0,034	0,001	0,001	0,001	62,005	0,020	0,525	0,103	6,346	0,446	0,009	0,014	0,014	806,1	0,261
Lining & Partial Closure (18,11 ac)																											
Scrapers	0,200	0,047	1,709	0,202	0,004	0,006	0,006	367,037	0,119	1,599	0,373	13,671	1,616	0,031	0,050	0,050	2 936,297	0,951	279,825	65,246	2 392,338	282,731	5,437	8,699	8,699	513 851,9	166,376
Scrapers	0,100	0,023	0,854	0,101	0,002	0,003	0,003	183,519	0,059	0,800	0,186	6,835	0,808	0,016	0,025	0,025	1 468,148	0,475	139,913	32,623	1 196,169	141,365	2,719	4,350	4,350	256 926,0	83,188
Off-Highway Trucks	0,142	0,040	1,482	0,175	0,003	0,005	0,005	319,919	0,104	1,137	0,323	11,855	1,401	0,027	0,043	0,043	2 559,353	0,830	198,926	56,579	2 074,555	245,175	4,715	7,544	7,544	447 886,7	145,219
Rubber Tired Dozers	0,096	0,013	0,479	0,057	0,001	0,002	0,002	103,370	0,033	0,771	0,105	3,834	0,453	0,009	0,014	0,014	826,961	0,267	134,970	18,297	670,876	79,285	1,525	2,440	2,440	144 718,1	46,656
Rubber Tired Dozers	0,096	0,013	0,479	0,057	0,001	0,002	0,002	103,370	0,033	0,771	0,105	3,834	0,453	0,009	0,014	0,014	826,961	0,267	134,970	18,297	670,876	79,285	1,525	2,440	2,440	144 718,1	46,656
Rollers	0,020	0,004	0,248	0,017	0,000	0,001	0,001	31,758	0,010	0,081	0,016	0,992	0,070	0,001	0,002	0,002	127,031	0,041	14,261	2,815	173,583	12,198	0,235	0,375	0,375	22 230,4	7,178
Graders	0,046	0,010	0,372	0,044	0,001	0,001	0,001	80,030	0,026	0,370	0,081	2,975	0,352	0,007	0,011	0,011	640,240	0,207	64,789	14,198	520,608	61,526	1,183	1,893	1,893	112 042,0	36,206
Bore/Drill Rigs	0,031	0,015	0,536	0,063	0,001	0,002	0,002	114,656	0,037	0,249	0,117	4,288	0,507	0,010	0,016	0,016	917,251	0,296	43,591	20,463	750,322	88,674	1,705	2,728	2,728	160 518,9	51,840
Tractors/Loaders/Backhoes	0,039	0,009	0,586	0,041	0,001	0,001	0,001	75,514	0,024	0,236	0,057	3,513	0,247	0,005	0,008	0,008	453,084	0,146	41,276	9,970	614,793	43,202	0,831	1,329	1,329	79 289,7	25,589
Off-Highway Trucks	0,142	0,040	1,482	0,175	0,003	0,005	0,005	319,919	0,104	1,137	0,323	11,855	1,401	0,027	0,043	0,043	2 559,353	0,830	198,926	56,579	2 074,555	245,175	4,715	7,544	7,544	447 886,7	145,219
Off-Highway Trucks	0,071	0,020	0,741	0,088	0,002	0,003	0,003	159,960	0,052	0,568	0,162	5,927	0,700	0,013	0,022	0,022	1 279,676	0,415	99,463	28,289	1 037,278	122,587	2,357	3,772	3,772	223 943,4	72,609
Excavators	0,025	0,008	0,291	0,034	0,001	0,001	0,001	62,542	0,020	0,199	0,064	2,330	0,275	0,005	0,008	0,008	500,338	0,162	34,804	11,119	407,686	48,181	0,927	1,482	1,482	87 559,2	28,353
Forklifts	0,026	0,005	0,290	0,020	0,000	0,001	0,001	37,008	0,012	0,103	0,019	1,162	0,082	0,002	0,003	0,003	148,031	0,048	18,096	3,296	203,275	14,284	0,275	0,440	0,440	25 905,4	8,406
Other General Industrial Equip	0,404	0,079	4,881	0,343	0,007	0,011	0,011	620,046	0,201	0,808	0,158	9,762	0,686	0,013	0,021	0,021	1 240,092	0,401	141,474	27,704	1 708,425	120,052	2,309	3,694	3,694	217 016,1	70,184
Generator Sets	4,063	0,049	3,042	0,214	0,005	0,007	0,007	467,276	0,017	32,508	0,395	24,338	1,710	0,039	0,053	0,053	3 738,210	0,138	5 688,891	69,068	4 259,186	299,294	6,907	9,209	9,209	654 186,8	24,174
Total per Phase																											
Site Preparation	0,000	0,000	0,000	0,000	0,000	0,000	0,000	0,000	0,000	0,000	0,000	0,000	0,000	0,000	0,000	0,000	0,000	0,000	0,000	0,000	0,000	0,000	0,000	0,000	0,000	0,0	0,000
Grading	0,000	0,000	0,000	0,000	0,000	0,000	0,000	0,000	0,000	0,000	0,000	0,000	0,000	0,000	0,000	0,000	0,000	0,000	0,000	0,000	0,000	0,000	0,000	0,000	0,000	0,0	0,000
Building Construction	0,000	0,000	0,000	0,000	0,000	0,000	0,000	0,000	0,000	0,000	0,000	0,000	0,000	0,000	0,000	0,000	0,000	0,000	0,000	0,000	0,000	0,000	0,000	0,000	0,000	0,0	0,000
Paving - Asphalt	0,000	0,000	0,000	0,000	0,000	0,000	0,000	0,000	0,000	0,000	0,000	0,000	0,000	0,000	0,000	0,000	0,000	0,000	0,000	0,000	0,000	0,000	0,000	0,000	0,000	0,0	0,000
Paving - Concrete	0,000	0,000	0,000	0,000	0,000	0,000	0,000	0,000	0,000	0,000	0,000	0,000	0,000	0,000	0,000	0,000	0,000	0,000	0,000	0,000	0,000	0,000	0,000	0,000	0,000	0,0	0,000
Site Preparation - Pond	0,000	0,000	0,000	0,000	0,000	0,000	0,000	0,000	0,000	0,000	0,000	0,000	0,000	0,000	0,000	0,000	0,000	0,000	0,000	0,000	0,000	0,000	0,000	0,000	0,000	0,0	0,000
Excavation	0,288	0,061	2,319	0,262	0,005	0,008	0,008	477,850	0,155	2,180	0,461	17,084	1,996	0,038	0,061	0,061	3 636,790	1,177	28,334	5,987	222,095	25,944	0,499	0,798	0,798	47 278,3	15,300
Lining & Partial Closure	5,503	0,376	17,473	1,631	0,032	0,050	0,050	3 045,924	0,852	41,338	2,483	107,169	10,760	0,214	0,331	0,331	########	5,473	7 234,176	434,542	18 754,527	1 883,015	37,363	57,939	57,939	3 538 679,6	957,853
Total																			**7 262,510**	**440,529**	**18 976,622**	**1 908,959**	**37,862**	**58,737**	**58,737**	**3 585 957,9**	**973,153**

WPWMA EIR
Construction Emissions - Proposed Project Exhaust Emissions
Plan Concept 1

Recovered Materials Storage

Construction Period:	01.01.2029	to	
Number of workers:		Duration (weeks):	

Off Road Equipment Type	Area Size	Number (ea)	Daily Hours	Annual Days Equipment Used
Demolition				
Scraper - CAT 657				
Water Truck - 4000 gal, 3 axle, 58000 gvw				
Site Preparation (2 ac)	***2 ac***	***3***	***23***	***3***
Graders	2	1	8	3
Tractors/Loaders/Backhoes	2	1	8	3
Rubber Tired Dozers	2	1	7	3
Scrapers	2	0	0	0
Grading (2 ac)	***2 ac***	***3***	***19***	***6***
Rubber Tired Dozers	2	1	6	6
Concrete/Industrial Saws	2	0	0	0
Tractors/Loaders/Backhoes	2	1	7	6
Graders	2	1	6	6
Excavators	2	0	0	0
Scrapers	2	0	0	0
Building Construction (2 ac)	***2 ac***	***7***	***50***	***220***
Cranes	2	1	6	220
Forklifts	2	1	6	220
Tractors/Loaders/Backhoes	2	1	6	220
Welders	2	3	8	220
Generator Sets	2	1	8	220
Paving - Asphalt (1 ac)	***1 ac***	***7***	***45***	***10***
Pavers	1	1	7	10
Cement and Mortar Mixers	1	4	6	10
Rollers	1	1	7	10
Tractors/Loaders/Backhoes	1	1	7	10
Paving Equipment	1	0	0	0
Paving - Concrete (2 ac)	***2 ac***	***5***	***35***	***10***
Pavers	2	1	6	10
Cement and Mortar Mixers	2	1	6	10
Rollers	2	1	7	10
Tractors/Loaders/Backhoes	2	1	8	10
Paving Equipment	2	1	8	10
Site Preparation - Pond (0 ac)	***0 ac***	***0***	***0***	***0***
Graders	0	0	0	0
Tractors/Loaders/Backhoes	0	0	0	0
Rubber Tired Dozers	0	0	0	0
Scrapers	0	0	0	0
Excavation (0 cy)	***0 cy***	***0***	***0***	***0***
Scrapers	0	0	0	0
Rubber Tired Dozers	0	0	0	0
Off-Highway Trucks	0	0	0	0
Other General Industrial Equipment	0	0	0	0

Area Size Reference Table	Size	Unit
Site Preparation	2	ac
Grading	2	ac
Building Construction	2	ac
Paving - Asphalt	1	ac
Paving - Concrete	2	ac
Site Preparation - Pond	0	ac
Excavation	0	cy

WPWMA EIR
Construction Emissions - Proposed Project Exhaust Emissions

Recovered Materials Storage

Emission Factors					Emissions Factor (g/bhp-hr)								
Equipment Type	HorsePower	Load Factor	Construction Year	Year+Equipment Type+HorsePower	CO	NOX	PM10	PM2.5	ROG	TOG	SO2	CO2	CH4
Demolition													
Site Preparation (2 ac)													
Graders	187	0,41	2029	2025Graders250	2,20E+00	2,60E-01	8,00E-03	8,00E-03	6,00E-02	2,74E-01	5,00E-03	4,73E+02	1,53E-01
Tractors/Loaders/Backhoes	97	0,37	2029	2025Tractors/Loaders/Backhoes120	3,70E+00	2,60E-01	8,00E-03	8,00E-03	6,00E-02	2,48E-01	5,00E-03	4,77E+02	1,54E-01
Rubber Tired Dozers	247	0,4	2029	2025Rubber Tired Dozers250	2,20E+00	2,60E-01	8,00E-03	8,00E-03	6,00E-02	4,43E-01	5,00E-03	4,75E+02	1,53E-01
Scrapers													
Grading (2 ac)													
Rubber Tired Dozers	247	0,4	2029	2025Rubber Tired Dozers250	2,20E+00	2,60E-01	8,00E-03	8,00E-03	6,00E-02	4,43E-01	5,00E-03	4,75E+02	1,53E-01
Concrete/Industrial Saws													
Tractors/Loaders/Backhoes	97	0,37	2029	2025Tractors/Loaders/Backhoes120	3,70E+00	2,60E-01	8,00E-03	8,00E-03	6,00E-02	2,48E-01	5,00E-03	4,77E+02	1,54E-01
Graders	187	0,41	2029	2025Graders250	2,20E+00	2,60E-01	8,00E-03	8,00E-03	6,00E-02	2,74E-01	5,00E-03	4,73E+02	1,53E-01
Excavators													
Scrapers													
Building Construction (2 ac)													
Cranes	231	0,29	2029	2025Cranes250	2,20E+00	2,60E-01	8,00E-03	8,00E-03	6,00E-02	3,15E-01	5,00E-03	4,73E+02	1,53E-01
Forklifts	89	0,2	2029	2025Forklifts120	3,70E+00	2,60E-01	8,00E-03	8,00E-03	6,00E-02	3,29E-01	5,00E-03	4,72E+02	1,53E-01
Tractors/Loaders/Backhoes	97	0,37	2029	2025Tractors/Loaders/Backhoes120	3,70E+00	2,60E-01	8,00E-03	8,00E-03	6,00E-02	2,48E-01	5,00E-03	4,77E+02	1,54E-01
Welders	46	0,45	2029	2025Welders50	4,10E+00	2,75E+00	8,00E-03	8,00E-03	1,20E-01	6,32E+00	7,00E-03	5,68E+02	5,40E-02
Generator Sets	84	0,74	2029	2025Generator Sets120	3,70E+00	2,60E-01	8,00E-03	8,00E-03	6,00E-02	4,94E+00	6,00E-03	5,68E+02	2,10E-02
Paving - Asphalt (1 ac)													
Pavers	130	0,42	2029	2025Pavers175	2,20E+00	2,60E-01	8,00E-03	8,00E-03	6,00E-02	2,15E-01	5,00E-03	4,72E+02	1,53E-01
Cement and Mortar Mixers	9	0,56	2029	2025Cement and Mortar Mixers15	4,10E+00	2,75E+00	8,00E-03	8,00E-03	1,20E-01	1,08E+00	8,00E-03	5,68E+02	5,90E-02
Rollers	80	0,38	2029	2025Rollers120	3,70E+00	2,60E-01	8,00E-03	8,00E-03	6,00E-02	3,04E-01	5,00E-03	4,74E+02	1,53E-01
Tractors/Loaders/Backhoes	97	0,37	2029	2025Tractors/Loaders/Backhoes120	3,70E+00	2,60E-01	8,00E-03	8,00E-03	6,00E-02	2,48E-01	5,00E-03	4,77E+02	1,54E-01
Paving Equipment													
Paving - Concrete (2 ac)													
Pavers	130	0,42	2029	2025Pavers175	2,20E+00	2,60E-01	8,00E-03	8,00E-03	6,00E-02	2,15E-01	5,00E-03	4,72E+02	1,53E-01
Cement and Mortar Mixers	9	0,56	2029	2025Cement and Mortar Mixers15	4,10E+00	2,75E+00	8,00E-03	8,00E-03	1,20E-01	1,08E+00	8,00E-03	5,68E+02	5,90E-02
Rollers	80	0,38	2029	2025Rollers120	3,70E+00	2,60E-01	8,00E-03	8,00E-03	6,00E-02	3,04E-01	5,00E-03	4,74E+02	1,53E-01
Tractors/Loaders/Backhoes	97	0,37	2029	2025Tractors/Loaders/Backhoes120	3,70E+00	2,60E-01	8,00E-03	8,00E-03	6,00E-02	2,48E-01	5,00E-03	4,77E+02	1,54E-01
Paving Equipment	132	0,36	2029	2025Paving Equipment175	2,20E+00	2,60E-01	8,00E-03	8,00E-03	6,00E-02	2,08E-01	5,00E-03	4,70E+02	1,52E-01
Site Preparation - Pond (0 ac)													
Graders													
Tractors/Loaders/Backhoes													
Rubber Tired Dozers													
Scrapers													
Excavation (0 cy)													
Scrapers													
Rubber Tired Dozers													
Off-Highway Trucks													
Other General Industrial Equip													

WPWMA EIR
Construction Emissions - Proposed Project Exhaust Emissions

Recovered Materials Storage

	Hourly Emissions (lb/hr)									Daily Emissions (lb/day)									Annual Emissions (lb/yr)								
Equipment Type	**TOG**	**ROG**	**CO**	**NOX**	**SO2**	**PM10**	**PM2.5**	**CO2**	**CH4**	**TOG**	**ROG**	**CO**	**NOX**	**SO2**	**PM10**	**PM2.5**	**CO2**	**CH4**	**TOG**	**ROG**	**CO**	**NOX**	**SO2**	**PM10**	**PM2.5**	**CO2**	**CH4**
Demolition																											
Site Preparation (2 ac)																											
Graders	0,046	0,010	0,372	0,044	0,001	0,001	0,001	80,030	0,026	0,370	0,081	2,975	0,352	0,007	0,011	0,011	640,240	0,207	1,111	0,243	8,925	1,055	0,020	0,032	0,032	1 920,7	0,621
Tractors/Loaders/Backhoes	0,020	0,005	0,293	0,021	0,000	0,001	0,001	37,757	0,012	0,157	0,038	2,342	0,165	0,003	0,005	0,005	302,056	0,097	0,472	0,114	7,026	0,494	0,009	0,015	0,015	906,2	0,292
Rubber Tired Dozers	0,096	0,013	0,479	0,057	0,001	0,002	0,002	103,370	0,033	0,675	0,091	3,354	0,396	0,008	0,012	0,012	723,591	0,233	2,025	0,274	10,063	1,189	0,023	0,037	0,037	2 170,8	0,700
Scrapers																											
Grading (2 ac)																											
Rubber Tired Dozers	0,096	0,013	0,479	0,057	0,001	0,002	0,002	103,370	0,033	0,578	0,078	2,875	0,340	0,007	0,010	0,010	620,221	0,200	3,471	0,470	17,251	2,039	0,039	0,063	0,063	3 721,3	1,200
Concrete/Industrial Saws																											
Tractors/Loaders/Backhoes	0,020	0,005	0,293	0,021	0,000	0,001	0,001	37,757	0,012	0,138	0,033	2,049	0,144	0,003	0,004	0,004	264,299	0,085	0,826	0,199	12,296	0,864	0,017	0,027	0,027	1 585,8	0,512
Graders	0,046	0,010	0,372	0,044	0,001	0,001	0,001	80,030	0,026	0,278	0,061	2,231	0,264	0,005	0,008	0,008	480,180	0,155	1,666	0,365	13,387	1,582	0,030	0,049	0,049	2 881,1	0,931
Excavators																											
Scrapers																											
Building Construction (2 ac)																											
Cranes	0,047	0,009	0,325	0,038	0,001	0,001	0,001	69,853	0,023	0,279	0,053	1,949	0,230	0,004	0,007	0,007	419,120	0,136	61,424	11,697	428,885	50,686	0,975	1,560	1,560	92 206,4	29,827
Forklifts	0,013	0,002	0,145	0,010	0,000	0,000	0,000	18,504	0,006	0,078	0,014	0,871	0,061	0,001	0,002	0,002	111,023	0,036	17,062	3,108	191,659	13,468	0,259	0,414	0,414	24 425,1	7,925
Tractors/Loaders/Backhoes	0,020	0,005	0,293	0,021	0,000	0,001	0,001	37,757	0,012	0,118	0,028	1,757	0,123	0,002	0,004	0,004	226,542	0,073	25,945	6,267	386,441	27,155	0,522	0,836	0,836	49 839,3	16,084
Welders	0,865	0,016	0,561	0,376	0,001	0,001	0,001	77,804	0,007	6,917	0,131	4,491	3,012	0,008	0,009	0,009	622,434	0,059	1 521,641	28,915	987,922	662,631	1,687	1,928	1,928	136 935,4	13,012
Generator Sets	0,677	0,008	0,507	0,036	0,001	0,001	0,001	77,879	0,003	5,418	0,066	4,056	0,285	0,007	0,009	0,009	623,035	0,023	1 191,958	14,471	892,401	62,709	1,447	1,930	1,930	137 067,7	5,065
Paving - Asphalt (1 ac)																											
Pavers	0,026	0,007	0,265	0,031	0,001	0,001	0,001	56,874	0,018	0,181	0,051	1,854	0,219	0,004	0,007	0,007	398,119	0,129	1,810	0,506	18,537	2,191	0,042	0,067	0,067	3 981,2	1,289
Cement and Mortar Mixers	0,048	0,005	0,182	0,122	0,000	0,000	0,000	25,258	0,003	0,287	0,032	1,093	0,733	0,002	0,002	0,002	151,549	0,016	2,867	0,320	10,934	7,333	0,021	0,021	0,021	1 515,5	0,157
Rollers	0,020	0,004	0,248	0,017	0,000	0,001	0,001	31,758	0,010	0,143	0,028	1,736	0,122	0,002	0,004	0,004	222,304	0,072	1,426	0,281	17,358	1,220	0,023	0,038	0,038	2 223,0	0,718
Tractors/Loaders/Backhoes	0,020	0,005	0,293	0,021	0,000	0,001	0,001	37,757	0,012	0,138	0,033	2,049	0,144	0,003	0,004	0,004	264,299	0,085	1,376	0,332	20,493	1,440	0,028	0,044	0,044	2 643,0	0,853
Paving Equipment																											
Paving - Concrete (2 ac)																											
Pavers	0,026	0,007	0,265	0,031	0,001	0,001	0,001	56,874	0,018	0,155	0,043	1,589	0,188	0,004	0,006	0,006	341,245	0,111	1,551	0,433	15,889	1,878	0,036	0,058	0,058	3 412,5	1,105
Cement and Mortar Mixers	0,012	0,001	0,046	0,031	0,000	0,000	0,000	6,315	0,001	0,072	0,008	0,273	0,183	0,001	0,001	0,001	37,887	0,004	0,717	0,080	2,733	1,833	0,005	0,005	0,005	378,9	0,039
Rollers	0,020	0,004	0,248	0,017	0,000	0,001	0,001	31,758	0,010	0,143	0,028	1,736	0,122	0,002	0,004	0,004	222,304	0,072	1,426	0,281	17,358	1,220	0,023	0,038	0,038	2 223,0	0,718
Tractors/Loaders/Backhoes	0,020	0,005	0,293	0,021	0,000	0,001	0,001	37,757	0,012	0,157	0,038	2,342	0,165	0,003	0,005	0,005	302,056	0,097	1,572	0,380	23,421	1,646	0,032	0,051	0,051	3 020,6	0,975
Paving Equipment	0,022	0,006	0,230	0,027	0,001	0,001	0,001	49,290	0,016	0,175	0,050	1,844	0,218	0,004	0,007	0,007	394,318	0,127	1,747	0,503	18,438	2,179	0,042	0,067	0,067	3 943,2	1,274
Site Preparation - Pond (0 ac)																											
Graders																											
Tractors/Loaders/Backhoes																											
Rubber Tired Dozers																											
Scrapers																											
Excavation (0 cy)																											
Scrapers																											
Rubber Tired Dozers																											
Off-Highway Trucks																											
Other General Industrial Equip																											
Total per Phase																											
Site Preparation	0,162	0,028	1,144	0,121	0,002	0,004	0,004	221,157	0,071	1,202	0,211	8,671	0,913	0,018	0,028	0,028	1 665,887	0,538	3,607	0,632	26,014	2,738	0,053	0,084	0,084	4 997,7	1,613
Grading	0,162	0,028	1,144	0,121	0,002	0,004	0,004	221,157	0,071	0,994	0,172	7,156	0,747	0,014	0,023	0,023	1 364,700	0,440	5,962	1,035	42,934	4,485	0,086	0,138	0,138	8 188,2	2,643
Building Construction	1,621	0,041	1,831	0,481	0,003	0,004	0,004	281,798	0,051	12,809	0,293	13,124	3,712	0,022	0,030	0,030	2 002,154	0,327	2 818,031	64,458	2 887,309	816,650	4,890	6,667	6,667	440 473,9	71,913
Paving - Asphalt	0,114	0,021	0,988	0,192	0,002	0,002	0,002	151,647	0,043	0,748	0,144	6,732	1,218	0,011	0,017	0,017	1 036,272	0,302	7,479	1,439	67,322	12,184	0,115	0,171	0,171	10 362,7	3,017
Paving - Concrete	0,100	0,024	1,082	0,127	0,002	0,003	0,003	181,993	0,057	0,701	0,168	7,784	0,876	0,014	0,022	0,022	1 297,811	0,411	7,014	1,677	77,840	8,756	0,138	0,218	0,218	12 978,1	4,111
Site Preparation - Pond	0,000	0,000	0,000	0,000	0,000	0,000	0,000	0,000	0,000	0,000	0,000	0,000	0,000	0,000	0,000	0,000	0,000	0,000	0,000	0,000	0,000	0,000	0,000	0,000	0,000	0,0	0,000
Excavation	0,000	0,000	0,000	0,000	0,000	0,000	0,000	0,000	0,000	0,000	0,000	0,000	0,000	0,000	0,000	0,000	0,000	0,000	0,000	0,000	0,000	0,000	0,000	0,000	0,000	0,0	0,000
Total																			**2 842,092**	**69,241**	**3 101,420**	**844,812**	**5,282**	**7,278**	**7,278**	**477 000,6**	**83,297**

WPWMA EIR
Construction Emissions - Proposed Project Exhaust Emissions
Plan Concept 1

HHW Storage

Construction Period:	01.01.2029	to		
Number of workers:		Duration (weeks):		

Off Road Equipment Type	Area Size	Number (ea)	Daily Hours	Annual Days Equipment Used
Demolition				
Scraper - CAT 657				
Water Truck - 4000 gal, 3 axle, 58000 gvw				
Site Preparation (1 ac)	***1 ac***	***2***	***16***	***2***
Graders	1	1	8	2
Tractors/Loaders/Backhoes	1	1	8	2
Rubber Tired Dozers	1	0	0	0
Scrapers	1	0	0	0
Grading (1 ac)	***1 ac***	***4***	***21***	***4***
Rubber Tired Dozers	1	1	1	4
Concrete/Industrial Saws	1	1	8	4
Tractors/Loaders/Backhoes	1	2	6	4
Graders	1	0	0	0
Excavators	1	0	0	0
Scrapers	1	0	0	0
Building Construction (1 ac)	***1 ac***	***5***	***32***	***200***
Cranes	1	1	4	200
Forklifts	1	2	6	200
Tractors/Loaders/Backhoes	1	2	8	200
Welders	1	0	0	0
Generator Sets	1	0	0	0
Paving - Asphalt (0 ac)	***0 ac***	***0***	***0***	***0***
Pavers	0	0	0	0
Cement and Mortar Mixers	0	0	0	0
Rollers	0	0	0	0
Tractors/Loaders/Backhoes	0	0	0	0
Paving Equipment	0	0	0	0
Paving - Concrete (0 ac)	***0 ac***	***0***	***0***	***0***
Pavers	0	0	0	0
Cement and Mortar Mixers	0	0	0	0
Rollers	0	0	0	0
Tractors/Loaders/Backhoes	0	0	0	0
Paving Equipment	0	0	0	0
Site Preparation - Pond (0 ac)	***0 ac***	***0***	***0***	***0***
Graders	0	0	0	0
Tractors/Loaders/Backhoes	0	0	0	0
Rubber Tired Dozers	0	0	0	0
Scrapers	0	0	0	0
Excavation (0 cy)	***0 cy***	***0***	***0***	***0***
Scrapers	0	0	0	0
Rubber Tired Dozers	0	0	0	0
Off-Highway Trucks	0	0	0	0
Other General Industrial Equipment	0	0	0	0

Area Size Reference Table	Size	Unit
Site Preparation	1	ac
Grading	1	ac
Building Construction	1	ac
Paving - Asphalt	0	ac
Paving - Concrete	0	ac
Site Preparation - Pond	0	ac
Excavation	0	cy

WPWMA EIR
Construction Emissions - Proposed Project Exhaust Emissions

HHW Storage

Emission Factors					Emissions Factor (g/bhp-hr)								
Equipment Type	HorsePower	Load Factor	Construction Year	Year+Equipment Type+HorsePower	CO	NOX	PM10	PM2.5	ROG	TOG	SO2	CO2	CH4
Demolition													
Site Preparation (1 ac)													
Graders	187	0,41	2029	2025Graders250	2,20E+00	2,60E-01	8,00E-03	8,00E-03	6,00E-02	2,74E-01	5,00E-03	4,73E+02	1,53E-01
Tractors/Loaders/Backhoes	97	0,37	2029	2025Tractors/Loaders/Backhoes120	3,70E+00	2,60E-01	8,00E-03	8,00E-03	6,00E-02	2,48E-01	5,00E-03	4,77E+02	1,54E-01
Rubber Tired Dozers													
Scrapers													
Grading (1 ac)													
Rubber Tired Dozers	247	0,4	2029	2025Rubber Tired Dozers250	2,20E+00	2,60E-01	8,00E-03	8,00E-03	6,00E-02	4,43E-01	5,00E-03	4,75E+02	1,53E-01
Concrete/Industrial Saws	81	0,73	2029	2025Concrete/Industrial Saws120	3,70E+00	2,60E-01	8,00E-03	8,00E-03	6,00E-02	2,85E+00	6,00E-03	5,68E+02	2,50E-02
Tractors/Loaders/Backhoes	97	0,37	2029	2025Tractors/Loaders/Backhoes120	3,70E+00	2,60E-01	8,00E-03	8,00E-03	6,00E-02	2,48E-01	5,00E-03	4,77E+02	1,54E-01
Graders													
Excavators													
Scrapers													
Building Construction (1 ac)													
Cranes	231	0,29	2029	2025Cranes250	2,20E+00	2,60E-01	8,00E-03	8,00E-03	6,00E-02	3,15E-01	5,00E-03	4,73E+02	1,53E-01
Forklifts	89	0,2	2029	2025Forklifts120	3,70E+00	2,60E-01	8,00E-03	8,00E-03	6,00E-02	3,29E-01	5,00E-03	4,72E+02	1,53E-01
Tractors/Loaders/Backhoes	97	0,37	2029	2025Tractors/Loaders/Backhoes120	3,70E+00	2,60E-01	8,00E-03	8,00E-03	6,00E-02	2,48E-01	5,00E-03	4,77E+02	1,54E-01
Welders													
Generator Sets													
Paving - Asphalt (0 ac)													
Pavers													
Cement and Mortar Mixers													
Rollers													
Tractors/Loaders/Backhoes													
Paving Equipment													
Paving - Concrete (0 ac)													
Pavers													
Cement and Mortar Mixers													
Rollers													
Tractors/Loaders/Backhoes													
Paving Equipment													
Site Preparation - Pond (0 ac)													
Graders													
Tractors/Loaders/Backhoes													
Rubber Tired Dozers													
Scrapers													
Excavation (0 cy)													
Scrapers													
Rubber Tired Dozers													
Off-Highway Trucks													
Other General Industrial Equip													

WPWMA EIR
Construction Emissions - Proposed Project Exhaust Emissions

HHW Storage

	Hourly Emissions (lb/hr)									Daily Emissions (lb/day)									Annual Emissions (lb/yr)								
Equipment Type	**TOG**	**ROG**	**CO**	**NOX**	**SO2**	**PM10**	**PM2.5**	**CO2**	**CH4**	**TOG**	**ROG**	**CO**	**NOX**	**SO2**	**PM10**	**PM2.5**	**CO2**	**CH4**	**TOG**	**ROG**	**CO**	**NOX**	**SO2**	**PM10**	**PM2.5**	**CO2**	**CH4**
Demolition																											
Site Preparation (1 ac)																											
Graders	0,046	0,010	0,372	0,044	0,001	0,001	0,001	80,030	0,026	0,370	0,081	2,975	0,352	0,007	0,011	0,011	640,240	0,207	0,740	0,162	5,950	0,703	0,014	0,022	0,022	1 280,5	0,414
Tractors/Loaders/Backhoes	0,020	0,005	0,293	0,021	0,000	0,001	0,001	37,757	0,012	0,157	0,038	2,342	0,165	0,003	0,005	0,005	302,056	0,097	0,314	0,076	4,684	0,329	0,006	0,010	0,010	604,1	0,195
Rubber Tired Dozers																											
Scrapers																											
Grading (1 ac)																											
Rubber Tired Dozers	0,096	0,013	0,479	0,057	0,001	0,002	0,002	103,370	0,033	0,096	0,013	0,479	0,057	0,001	0,002	0,002	103,370	0,033	0,386	0,052	1,917	0,227	0,004	0,007	0,007	413,5	0,133
Concrete/Industrial Saws	0,371	0,008	0,482	0,034	0,001	0,001	0,001	74,083	0,003	2,971	0,063	3,859	0,271	0,006	0,008	0,008	592,666	0,026	11,885	0,250	15,435	1,085	0,025	0,033	0,033	2 370,7	0,104
Tractors/Loaders/Backhoes	0,039	0,009	0,586	0,041	0,001	0,001	0,001	75,514	0,024	0,236	0,057	3,513	0,247	0,005	0,008	0,008	453,084	0,146	0,943	0,228	14,052	0,987	0,019	0,030	0,030	1 812,3	0,585
Graders																											
Excavators																											
Scrapers																											
Building Construction (1 ac)																											
Cranes	0,047	0,009	0,325	0,038	0,001	0,001	0,001	69,853	0,023	0,186	0,035	1,300	0,154	0,003	0,005	0,005	279,413	0,090	37,227	7,089	259,931	30,719	0,591	0,945	0,945	55 882,7	18,077
Forklifts	0,026	0,005	0,290	0,020	0,000	0,001	0,001	37,008	0,012	0,155	0,028	1,742	0,122	0,002	0,004	0,004	222,046	0,072	31,022	5,651	348,472	24,487	0,471	0,753	0,753	44 409,3	14,410
Tractors/Loaders/Backhoes	0,039	0,009	0,586	0,041	0,001	0,001	0,001	75,514	0,024	0,314	0,076	4,684	0,329	0,006	0,010	0,010	604,112	0,195	62,897	15,192	936,828	65,831	1,266	2,026	2,026	120 822,4	38,992
Welders																											
Generator Sets																											
Paving - Asphalt (0 ac)																											
Pavers																											
Cement and Mortar Mixers																											
Rollers																											
Tractors/Loaders/Backhoes																											
Paving Equipment																											
Paving - Concrete (0 ac)																											
Pavers																											
Cement and Mortar Mixers																											
Rollers																											
Tractors/Loaders/Backhoes																											
Paving Equipment																											
Site Preparation - Pond (0 ac)																											
Graders																											
Tractors/Loaders/Backhoes																											
Rubber Tired Dozers																											
Scrapers																											
Excavation (0 cy)																											
Scrapers																											
Rubber Tired Dozers																											
Off-Highway Trucks																											
Other General Industrial Equip																											

Total per Phase																											
Site Preparation	0,066	0,015	0,665	0,065	0,001	0,002	0,002	117,787	0,038	0,527	0,119	5,317	0,516	0,010	0,016	0,016	942,296	0,304	1,055	0,238	10,634	1,032	0,020	0,032	0,032	1 884,6	0,609
Grading	0,507	0,030	1,547	0,132	0,003	0,004	0,004	252,967	0,061	3,303	0,133	7,851	0,575	0,012	0,018	0,018	1 149,120	0,206	13,214	0,530	31,404	2,299	0,048	0,071	0,071	4 596,5	0,822
Building Construction	0,112	0,023	1,201	0,100	0,002	0,003	0,003	182,375	0,059	0,656	0,140	7,726	0,605	0,012	0,019	0,019	1 105,572	0,357	131,146	27,932	1 545,230	121,037	2,328	3,724	3,724	221 114,4	71,479
Paving - Asphalt	0,000	0,000	0,000	0,000	0,000	0,000	0,000	0,000	0,000	0,000	0,000	0,000	0,000	0,000	0,000	0,000	0,000	0,000	0,000	0,000	0,000	0,000	0,000	0,000	0,000	0,0	0,000
Paving - Concrete	0,000	0,000	0,000	0,000	0,000	0,000	0,000	0,000	0,000	0,000	0,000	0,000	0,000	0,000	0,000	0,000	0,000	0,000	0,000	0,000	0,000	0,000	0,000	0,000	0,000	0,0	0,000
Site Preparation - Pond	0,000	0,000	0,000	0,000	0,000	0,000	0,000	0,000	0,000	0,000	0,000	0,000	0,000	0,000	0,000	0,000	0,000	0,000	0,000	0,000	0,000	0,000	0,000	0,000	0,000	0,0	0,000
Excavation	0,000	0,000	0,000	0,000	0,000	0,000	0,000	0,000	0,000	0,000	0,000	0,000	0,000	0,000	0,000	0,000	0,000	0,000	0,000	0,000	0,000	0,000	0,000	0,000	0,000	0,0	0,000
Total																			**145,414**	**28,700**	**1 587,268**	**124,368**	**2,396**	**3,827**	**3,827**	**227 595,5**	**72,910**

WPWMA EIR
Construction Emissions - Proposed Project Exhaust Emissions
Plan Concept 1

Primary Maintenance Facility

Construction Period:	01.01.2033	to		
Number of workers:		Duration (weeks):		

Off Road Equipment Type	Area Size	Number (ea)	Daily Hours	Annual Days Equipment Used
Demolition				
Scraper - CAT 657				
Water Truck - 4000 gal, 3 axle, 58000 gvw				
Site Preparation (2 ac)	***2 ac***	***3***	***23***	***3***
Graders	2	1	8	3
Tractors/Loaders/Backhoes	2	1	8	3
Rubber Tired Dozers	2	1	7	3
Scrapers	2	0	0	0
Grading (2 ac)	***2 ac***	***3***	***19***	***6***
Rubber Tired Dozers	2	1	6	6
Concrete/Industrial Saws	2	0	0	0
Tractors/Loaders/Backhoes	2	1	7	6
Graders	2	1	6	6
Excavators	2	0	0	0
Scrapers	2	0	0	0
Building Construction (1 ac)	***1 ac***	***5***	***32***	***200***
Cranes	1	1	4	200
Forklifts	1	2	6	200
Tractors/Loaders/Backhoes	1	2	8	200
Welders	1	0	0	0
Generator Sets	1	0	0	0
Paving - Asphalt (2 ac)	***2 ac***	***5***	***35***	***10***
Pavers	2	1	6	10
Cement and Mortar Mixers	2	1	6	10
Rollers	2	1	7	10
Tractors/Loaders/Backhoes	2	1	8	10
Paving Equipment	2	1	8	10
Paving - Concrete (1 ac)	***1 ac***	***7***	***45***	***10***
Pavers	1	1	7	10
Cement and Mortar Mixers	1	4	6	10
Rollers	1	1	7	10
Tractors/Loaders/Backhoes	1	1	7	10
Paving Equipment	1	0	0	0
Site Preparation - Pond (0 ac)	***0 ac***	***0***	***0***	***0***
Graders	0	0	0	0
Tractors/Loaders/Backhoes	0	0	0	0
Rubber Tired Dozers	0	0	0	0
Scrapers	0	0	0	0
Excavation (0 cy)	***0 cy***	***0***	***0***	***0***
Scrapers	0	0	0	0
Rubber Tired Dozers	0	0	0	0
Off-Highway Trucks	0	0	0	0
Other General Industrial Equipment	0	0	0	0

Area Size Reference Table	Size	Unit
Site Preparation	2	ac
Grading	2	ac
Building Construction	1	ac
Paving - Asphalt	2	ac
Paving - Concrete	1	ac
Site Preparation - Pond	0	ac
Excavation	0	cy

WPWMA EIR
Construction Emissions - Proposed Project Exhaust Emissions

Primary Maintenance Facility

Emission Factors					Emissions Factor (g/bhp-hr)								
Equipment Type	HorsePower	Load Factor	Construction Year	Year+Equipment Type+HorsePower	CO	NOX	PM10	PM2.5	ROG	TOG	SO2	CO2	CH4
Demolition													
Site Preparation (2 ac)													
Graders	187	0,41	2033	2030Graders250	2,20E+00	2,60E-01	8,00E-03	8,00E-03	6,00E-02	3,11E+00	6,00E-03	5,68E+02	1,90E-02
Tractors/Loaders/Backhoes	97	0,37	2033	2030Tractors/Loaders/Backhoes120	3,70E+00	2,60E-01	8,00E-03	8,00E-03	6,00E-02	2,29E+00	6,00E-03	5,68E+02	2,40E-02
Rubber Tired Dozers	247	0,4	2033	2030Rubber Tired Dozers250	2,20E+00	2,60E-01	8,00E-03	8,00E-03	6,00E-02	1,56E+00	6,00E-03	5,68E+02	3,00E-02
Scrapers													
Grading (2 ac)													
Rubber Tired Dozers	247	0,4	2033	2030Rubber Tired Dozers250	2,20E+00	2,60E-01	8,00E-03	8,00E-03	6,00E-02	1,56E+00	6,00E-03	5,68E+02	3,00E-02
Concrete/Industrial Saws													
Tractors/Loaders/Backhoes	97	0,37	2033	2030Tractors/Loaders/Backhoes120	3,70E+00	2,60E-01	8,00E-03	8,00E-03	6,00E-02	2,29E+00	6,00E-03	5,68E+02	2,40E-02
Graders	187	0,41	2033	2030Graders250	2,20E+00	2,60E-01	8,00E-03	8,00E-03	6,00E-02	3,11E+00	6,00E-03	5,68E+02	1,90E-02
Excavators													
Scrapers													
Building Construction (1 ac)													
Cranes	231	0,29	2033	2030Cranes250	2,20E+00	2,60E-01	8,00E-03	8,00E-03	6,00E-02	2,84E+00	6,00E-03	5,68E+02	2,00E-02
Forklifts	89	0,2	2033	2030Forklifts120	3,70E+00	2,60E-01	8,00E-03	8,00E-03	6,00E-02	1,48E+00	6,00E-03	5,68E+02	2,50E-02
Tractors/Loaders/Backhoes	97	0,37	2033	2030Tractors/Loaders/Backhoes120	3,70E+00	2,60E-01	8,00E-03	8,00E-03	6,00E-02	2,29E+00	6,00E-03	5,68E+02	2,40E-02
Welders													
Generator Sets													
Paving - Asphalt (2 ac)													
Pavers	130	0,42	2033	2030Pavers175	2,20E+00	2,60E-01	8,00E-03	8,00E-03	6,00E-02	5,58E+00	6,00E-03	5,68E+02	2,70E-02
Cement and Mortar Mixers	9	0,56	2033	2030Cement and Mortar Mixers15	4,10E+00	2,75E+00	8,00E-03	8,00E-03	1,20E-01	1,08E+00	8,00E-03	5,68E+02	5,90E-02
Rollers	80	0,38	2033	2030Rollers120	3,70E+00	2,60E-01	8,00E-03	8,00E-03	6,00E-02	6,53E+00	6,00E-03	5,68E+02	2,70E-02
Tractors/Loaders/Backhoes	97	0,37	2033	2030Tractors/Loaders/Backhoes120	3,70E+00	2,60E-01	8,00E-03	8,00E-03	6,00E-02	2,29E+00	6,00E-03	5,68E+02	2,40E-02
Paving Equipment	132	0,36	2033	2030Paving Equipment175	2,20E+00	2,60E-01	8,00E-03	8,00E-03	6,00E-02	5,53E+00	6,00E-03	5,68E+02	2,60E-02
Paving - Concrete (1 ac)													
Pavers	130	0,42	2033	2030Pavers175	2,20E+00	2,60E-01	8,00E-03	8,00E-03	6,00E-02	5,58E+00	6,00E-03	5,68E+02	2,70E-02
Cement and Mortar Mixers	9	0,56	2033	2030Cement and Mortar Mixers15	4,10E+00	2,75E+00	8,00E-03	8,00E-03	1,20E-01	1,08E+00	8,00E-03	5,68E+02	5,90E-02
Rollers	80	0,38	2033	2030Rollers120	3,70E+00	2,60E-01	8,00E-03	8,00E-03	6,00E-02	6,53E+00	6,00E-03	5,68E+02	2,70E-02
Tractors/Loaders/Backhoes	97	0,37	2033	2030Tractors/Loaders/Backhoes120	3,70E+00	2,60E-01	8,00E-03	8,00E-03	6,00E-02	2,29E+00	6,00E-03	5,68E+02	2,40E-02
Paving Equipment													
Site Preparation - Pond (0 ac)													
Graders													
Tractors/Loaders/Backhoes													
Rubber Tired Dozers													
Scrapers													
Excavation (0 cy)													
Scrapers													
Rubber Tired Dozers													
Off-Highway Trucks													
Other General Industrial Equip													

WPWMA EIR
Construction Emissions - Proposed Project Exhaust Emissions

Primary Maintenance Facility

	Hourly Emissions (lb/hr)									Daily Emissions (lb/day)									Annual Emissions (lb/yr)								
Equipment Type	**TOG**	**ROG**	**CO**	**NOX**	**SO2**	**PM10**	**PM2.5**	**CO2**	**CH4**	**TOG**	**ROG**	**CO**	**NOX**	**SO2**	**PM10**	**PM2.5**	**CO2**	**CH4**	**TOG**	**ROG**	**CO**	**NOX**	**SO2**	**PM10**	**PM2.5**	**CO2**	**CH4**
Demolition																											
Site Preparation (2 ac)																											
Graders	0,526	0,010	0,372	0,044	0,001	0,001	0,001	96,059	0,003	4,211	0,081	2,975	0,352	0,008	0,011	0,011	768,470	0,026	12,633	0,243	8,925	1,055	0,024	0,032	0,032	2 305,4	0,077
Tractors/Loaders/Backhoes	0,181	0,005	0,293	0,021	0,000	0,001	0,001	44,966	0,002	1,446	0,038	2,342	0,165	0,004	0,005	0,005	359,729	0,015	4,339	0,114	7,026	0,494	0,011	0,015	0,015	1 079,2	0,046
Rubber Tired Dozers	0,339	0,013	0,479	0,057	0,001	0,002	0,002	123,785	0,007	2,372	0,091	3,354	0,396	0,009	0,012	0,012	866,496	0,046	7,117	0,274	10,063	1,189	0,027	0,037	0,037	2 599,5	0,137
Scrapers																											
Grading (2 ac)																											
Rubber Tired Dozers	0,339	0,013	0,479	0,057	0,001	0,002	0,002	123,785	0,007	2,034	0,078	2,875	0,340	0,008	0,010	0,010	742,711	0,039	12,201	0,470	17,251	2,039	0,047	0,063	0,063	4 456,3	0,235
Concrete/Industrial Saws																											
Tractors/Loaders/Backhoes	0,181	0,005	0,293	0,021	0,000	0,001	0,001	44,966	0,002	1,266	0,033	2,049	0,144	0,003	0,004	0,004	314,763	0,013	7,594	0,199	12,296	0,864	0,020	0,027	0,027	1 888,6	0,080
Graders	0,526	0,010	0,372	0,044	0,001	0,001	0,001	96,059	0,003	3,158	0,061	2,231	0,264	0,006	0,008	0,008	576,353	0,019	18,949	0,365	13,387	1,582	0,037	0,049	0,049	3 458,1	0,116
Excavators																											
Scrapers																											
Building Construction (1 ac)																											
Cranes	0,419	0,009	0,325	0,038	0,001	0,001	0,001	83,931	0,003	1,675	0,035	1,300	0,154	0,004	0,005	0,005	335,723	0,012	334,956	7,089	259,931	30,719	0,709	0,945	0,945	67 144,7	2,363
Forklifts	0,116	0,005	0,290	0,020	0,000	0,001	0,001	44,603	0,002	0,697	0,028	1,742	0,122	0,003	0,004	0,004	267,616	0,012	139,389	5,651	348,472	24,487	0,565	0,753	0,753	53 523,3	2,355
Tractors/Loaders/Backhoes	0,362	0,009	0,586	0,041	0,001	0,001	0,001	89,932	0,004	2,893	0,076	4,684	0,329	0,008	0,010	0,010	719,457	0,030	578,554	15,192	936,828	65,831	1,519	2,026	2,026	143 891,4	6,077
Welders																											
Generator Sets																											
Paving - Asphalt (2 ac)																											
Pavers	0,671	0,007	0,265	0,031	0,001	0,001	0,001	68,408	0,003	4,028	0,043	1,589	0,188	0,004	0,006	0,006	410,445	0,020	40,279	0,433	15,889	1,878	0,043	0,058	0,058	4 104,5	0,195
Cement and Mortar Mixers	0,012	0,001	0,046	0,031	0,000	0,000	0,000	6,315	0,001	0,072	0,008	0,273	0,183	0,001	0,001	0,001	37,887	0,004	0,717	0,080	2,733	1,833	0,005	0,005	0,005	378,9	0,039
Rollers	0,438	0,004	0,248	0,017	0,000	0,001	0,001	38,088	0,002	3,063	0,028	1,736	0,122	0,003	0,004	0,004	266,614	0,013	30,626	0,281	17,358	1,220	0,028	0,038	0,038	2 666,1	0,127
Tractors/Loaders/Backhoes	0,181	0,005	0,293	0,021	0,000	0,001	0,001	44,966	0,002	1,446	0,038	2,342	0,165	0,004	0,005	0,005	359,729	0,015	14,464	0,380	23,421	1,646	0,038	0,051	0,051	3 597,3	0,152
Paving Equipment	0,579	0,006	0,230	0,027	0,001	0,001	0,001	59,537	0,003	4,631	0,050	1,844	0,218	0,005	0,007	0,007	476,297	0,022	46,306	0,503	18,438	2,179	0,050	0,067	0,067	4 763,0	0,218
Paving - Concrete (1 ac)																											
Pavers	0,671	0,007	0,265	0,031	0,001	0,001	0,001	68,408	0,003	4,699	0,051	1,854	0,219	0,005	0,007	0,007	478,853	0,023	46,992	0,506	18,537	2,191	0,051	0,067	0,067	4 788,5	0,228
Cement and Mortar Mixers	0,048	0,005	0,182	0,122	0,000	0,000	0,000	25,258	0,003	0,287	0,032	1,093	0,733	0,002	0,002	0,002	151,549	0,016	2,867	0,320	10,934	7,333	0,021	0,021	0,021	1 515,5	0,157
Rollers	0,438	0,004	0,248	0,017	0,000	0,001	0,001	38,088	0,002	3,063	0,028	1,736	0,122	0,003	0,004	0,004	266,614	0,013	30,626	0,281	17,358	1,220	0,028	0,038	0,038	2 666,1	0,127
Tractors/Loaders/Backhoes	0,181	0,005	0,293	0,021	0,000	0,001	0,001	44,966	0,002	1,266	0,033	2,049	0,144	0,003	0,004	0,004	314,763	0,013	12,656	0,332	20,493	1,440	0,033	0,044	0,044	3 147,6	0,133
Paving Equipment																											
Site Preparation - Pond (0 ac)																											
Graders																											
Tractors/Loaders/Backhoes																											
Rubber Tired Dozers																											
Scrapers																											
Excavation (0 cy)																											
Scrapers																											
Rubber Tired Dozers																											
Off-Highway Trucks																											
Other General Industrial Equip																											

Total per Phase																											
Site Preparation	1,046	0,028	1,144	0,121	0,003	0,004	0,004	264,810	0,012	8,030	0,211	8,671	0,913	0,021	0,028	0,028	1 994,695	0,087	24,089	0,632	26,014	2,738	0,063	0,084	0,084	5 984,1	0,260
Grading	1,046	0,028	1,144	0,121	0,003	0,004	0,004	264,810	0,012	6,457	0,172	7,156	0,747	0,017	0,023	0,023	1 633,826	0,072	38,744	1,035	42,934	4,485	0,103	0,138	0,138	9 803,0	0,431
Building Construction	0,896	0,023	1,201	0,100	0,002	0,003	0,003	218,466	0,009	5,264	0,140	7,726	0,605	0,014	0,019	0,019	1 322,797	0,054	1 052,899	27,932	1 545,230	121,037	2,793	3,724	3,724	264 559,4	10,794
Paving - Asphalt	1,880	0,024	1,082	0,127	0,002	0,003	0,003	217,313	0,010	13,239	0,168	7,784	0,876	0,017	0,022	0,022	1 550,972	0,073	132,391	1,677	77,840	8,756	0,165	0,218	0,218	15 509,7	0,731
Paving - Concrete	1,337	0,021	0,988	0,192	0,002	0,002	0,002	176,720	0,010	9,314	0,144	6,732	1,218	0,013	0,017	0,017	1 211,779	0,064	93,141	1,439	67,322	12,184	0,133	0,171	0,171	12 117,8	0,644
Site Preparation - Pond	0,000	0,000	0,000	0,000	0,000	0,000	0,000	0,000	0,000	0,000	0,000	0,000	0,000	0,000	0,000	0,000	0,000	0,000	0,000	0,000	0,000	0,000	0,000	0,000	0,000	0,0	0,000
Excavation	0,000	0,000	0,000	0,000	0,000	0,000	0,000	0,000	0,000	0,000	0,000	0,000	0,000	0,000	0,000	0,000	0,000	0,000	0,000	0,000	0,000	0,000	0,000	0,000	0,000	0,0	0,000
Total																			**1 341,263**	**32,715**	**1 759,340**	**149,200**	**3,258**	**4,335**	**4,335**	**307 973,9**	**12,860**

WPWMA EIR
Construction Emissions - Proposed Project Exhaust Emissions
Plan Concept 1

Stockpile Relocation

Construction Period:	01.01.2033	to		
Number of workers:		Duration (weeks):		

Off Road Equipment Type	Area Size	Number (ea)	Daily Hours	Annual Days Equipment Used
Demolition				
Scraper - CAT 657				
Water Truck - 4000 gal, 3 axle, 58000 gvw				
Site Preparation (0 ac)	***0 ac***	***0***	***0***	***0***
Graders	0	0	0	0
Tractors/Loaders/Backhoes	0	0	0	0
Rubber Tired Dozers	0	0	0	0
Scrapers	0	0	0	0
Grading (0 ac)	***0 ac***	***0***	***0***	***0***
Rubber Tired Dozers	0	0	0	0
Concrete/Industrial Saws	0	0	0	0
Tractors/Loaders/Backhoes	0	0	0	0
Graders	0	0	0	0
Excavators	0	0	0	0
Scrapers	0	0	0	0
Building Construction (0 ac)	***0 ac***	***0***	***0***	***0***
Cranes	0	0	0	0
Forklifts	0	0	0	0
Tractors/Loaders/Backhoes	0	0	0	0
Welders	0	0	0	0
Generator Sets	0	0	0	0
Paving - Asphalt (0 ac)	***0 ac***	***0***	***0***	***0***
Pavers	0	0	0	0
Cement and Mortar Mixers	0	0	0	0
Rollers	0	0	0	0
Tractors/Loaders/Backhoes	0	0	0	0
Paving Equipment	0	0	0	0
Paving - Concrete (0 ac)	***0 ac***	***0***	***0***	***0***
Pavers	0	0	0	0
Cement and Mortar Mixers	0	0	0	0
Rollers	0	0	0	0
Tractors/Loaders/Backhoes	0	0	0	0
Paving Equipment	0	0	0	0
Site Preparation - Pond (0 ac)	***0 ac***	***0***	***0***	***0***
Graders	0	0	0	0
Tractors/Loaders/Backhoes	0	0	0	0
Rubber Tired Dozers	0	0	0	0
Scrapers	0	0	0	0
Excavation (0 cy)	***0 cy***	***0***	***0***	***0***
Scrapers	0	0	0	0
Rubber Tired Dozers	0	0	0	0
Off-Highway Trucks	0	0	0	0
Other General Industrial Equipment	0	0	0	0
Stockpile Movement (1400000 cy)	***1400000 cy***	***5***	***40***	***260***
Scrapers	1400000	5	8	260

Area Size Reference Table	Size	Unit
Site Preparation	0	ac
Grading	0	ac
Building Construction	0	ac
Paving - Asphalt	0	ac
Paving - Concrete	0	ac
Site Preparation - Pond	0	ac
Excavation	0	cy
Stockpile Movement	1 400 000	cy

WPWMA EIR
Construction Emissions - Proposed Project Exhaust Emissions

Stockpile Relocation

Emission Factors					Emissions Factor (g/bhp-hr)								
Equipment Type	HorsePower	Load Factor	Construction Year	Year+Equipment Type+HorsePower	CO	NOX	PM10	PM2.5	ROG	TOG	SO2	CO2	CH4
Demolition													
Site Preparation (0 ac)													
Graders													
Tractors/Loaders/Backhoes													
Rubber Tired Dozers													
Scrapers													
Grading (0 ac)													
Rubber Tired Dozers													
Concrete/Industrial Saws													
Tractors/Loaders/Backhoes													
Graders													
Excavators													
Scrapers													
Building Construction (0 ac)													
Cranes													
Forklifts													
Tractors/Loaders/Backhoes													
Welders													
Generator Sets													
Paving - Asphalt (0 ac)													
Pavers													
Cement and Mortar Mixers													
Rollers													
Tractors/Loaders/Backhoes													
Paving Equipment													
Paving - Concrete (0 ac)													
Pavers													
Cement and Mortar Mixers													
Rollers													
Tractors/Loaders/Backhoes													
Paving Equipment													
Site Preparation - Pond (0 ac)													
Graders													
Tractors/Loaders/Backhoes													
Rubber Tired Dozers													
Scrapers													
Excavation (0 cy)													
Scrapers													
Rubber Tired Dozers													
Off-Highway Trucks													
Other General Industrial Equip													
Stockpile Movement (1400000 cy)													
Scrapers	367	0,48	2033	2030Scrapers500	2,20E+00	2,60E-01	8,00E-03	8,00E-03	6,00E-02	2,70E+00	5,00E-03	5,68E+02	2,30E-02

WPWMA EIR
Construction Emissions - Proposed Project Exhaust Emissions

Stockpile Relocation

	Hourly Emissions (lb/hr)									Daily Emissions (lb/day)									Annual Emissions (lb/yr)								
Equipment Type	**TOG**	**ROG**	**CO**	**NOX**	**SO2**	**PM10**	**PM2.5**	**CO2**	**CH4**	**TOG**	**ROG**	**CO**	**NOX**	**SO2**	**PM10**	**PM2.5**	**CO2**	**CH4**	**TOG**	**ROG**	**CO**	**NOX**	**SO2**	**PM10**	**PM2.5**	**CO2**	**CH4**
Demolition																											
Site Preparation (0 ac)																											
Graders																											
Tractors/Loaders/Backhoes																											
Rubber Tired Dozers																											
Scrapers																											
Grading (0 ac)																											
Rubber Tired Dozers																											
Concrete/Industrial Saws																											
Tractors/Loaders/Backhoes																											
Graders																											
Excavators																											
Scrapers																											
Building Construction (0 ac)																											
Cranes																											
Forklifts																											
Tractors/Loaders/Backhoes																											
Welders																											
Generator Sets																											
Paving - Asphalt (0 ac)																											
Pavers																											
Cement and Mortar Mixers																											
Rollers																											
Tractors/Loaders/Backhoes																											
Paving Equipment																											
Paving - Concrete (0 ac)																											
Pavers																											
Cement and Mortar Mixers																											
Rollers																											
Tractors/Loaders/Backhoes																											
Paving Equipment																											
Site Preparation - Pond (0 ac)																											
Graders																											
Tractors/Loaders/Backhoes																											
Rubber Tired Dozers																											
Scrapers																											
Excavation (0 cy)																											
Scrapers																											
Rubber Tired Dozers																											
Off-Highway Trucks																											
Other General Industrial Equip																											
Stockpile Movement (1400000 cy)																											
Scrapers	5,237	0,117	4,272	0,505	0,010	0,016	0,016	1 103,542	0,045	41,897	0,932	34,176	4,039	0,078	0,124	0,124	8 828,335	0,357	10 893,218	242,341	8 885,829	1 050,143	20,195	32,312	32,312	2 295 367	92,897

Total per Phase																											
Site Preparation	0,000	0,000	0,000	0,000	0,000	0,000	0,000	0,000	0,000	0,000	0,000	0,000	0,000	0,000	0,000	0,000	0,000	0,000	0,000	0,000	0,000	0,000	0,000	0,000	0,000	0	0,000
Grading	0,000	0,000	0,000	0,000	0,000	0,000	0,000	0,000	0,000	0,000	0,000	0,000	0,000	0,000	0,000	0,000	0,000	0,000	0,000	0,000	0,000	0,000	0,000	0,000	0,000	0	0,000
Building Construction	0,000	0,000	0,000	0,000	0,000	0,000	0,000	0,000	0,000	0,000	0,000	0,000	0,000	0,000	0,000	0,000	0,000	0,000	0,000	0,000	0,000	0,000	0,000	0,000	0,000	0	0,000
Paving - Asphalt	0,000	0,000	0,000	0,000	0,000	0,000	0,000	0,000	0,000	0,000	0,000	0,000	0,000	0,000	0,000	0,000	0,000	0,000	0,000	0,000	0,000	0,000	0,000	0,000	0,000	0	0,000
Paving - Concrete	0,000	0,000	0,000	0,000	0,000	0,000	0,000	0,000	0,000	0,000	0,000	0,000	0,000	0,000	0,000	0,000	0,000	0,000	0,000	0,000	0,000	0,000	0,000	0,000	0,000	0	0,000
Site Preparation - Pond	0,000	0,000	0,000	0,000	0,000	0,000	0,000	0,000	0,000	0,000	0,000	0,000	0,000	0,000	0,000	0,000	0,000	0,000	0,000	0,000	0,000	0,000	0,000	0,000	0,000	0	0,000
Excavation	0,000	0,000	0,000	0,000	0,000	0,000	0,000	0,000	0,000	0,000	0,000	0,000	0,000	0,000	0,000	0,000	0,000	0,000	0,000	0,000	0,000	0,000	0,000	0,000	0,000	0	0,000
Stockpile Movement	5,237	0,117	4,272	0,505	0,010	0,016	0,016	1 103,542	0,045	41,897	0,932	34,176	4,039	0,078	0,124	0,124	8 828,335	0,357	10 893,218	242,341	8 885,829	1 050,143	20,195	32,312	32,312	2 295 367	92,897
Total																			**10 893,218**	**242,341**	**8 885,829**	**1 050,143**	**20,195**	**32,312**	**32,312**	**2 295 367**	**92,897**

WPWMA EIR

Construction Emissions - Proposed Project Exhaust Emissions

	Maximum Daily Emissions (lb/day) - across all construction phases								
Year	TOG	ROG	CO	NOX	SO2	PM10	PM2.5	CO2	CH4
2024	19,784	1,893	72,662	8,922	0,158	0,252	0,252	14 952,512	4,835
2025	6,395	1,227	50,691	5,318	0,102	0,164	0,164	9 697,393	3,133
2028	9,301	2,012	76,152	8,719	0,168	0,268	0,268	15 872,857	5,137
2029	57,451	2,916	128,144	15,077	0,248	0,380	0,380	23 372,301	6,368
2033	55,136	1,143	42,848	5,257	0,099	0,152	0,152	10 823,029	0,444

Total Annual GHG (lb/yr)							
Element	Year	CO2	CH4		Year	CO2	CH4
Public Area	2024	706 686,973	159,001		2024	772 312,302	179,8
Public Area - SW Pond	2024	8 636,089	2,790		2025	951 581,589	307,6
Western Entrance	2024	36 526,733	11,384		2028	2 994 889,564	969,2
Shared Site Utilities	2024	20 462,507	6,609		2029	4 290 553,945	1 129,4
Compost Facility	2025	903 780,151	292,156		2033	2 603 340,994	105,8
Compost Facility - SW Pond	2025	47 801,438	15,428				
Landfill Construction	2028	2 994 889,564	969,230				
Landfill Lining & Partial Closure	2029	3 585 957,897	973,153				
Recovered Materials Storage	2029	477 000,585	83,297				
HHW Storage	2029	227 595,464	72,910				
Primary Maintenance Facility	2033	307 973,926	12,860				
Stockpile Relocation	2033	2 295 367,068	92,897				

Maximum Daily Emissions (lb/day) - across all construction phases										
Element	Year	TOG	ROG	CO	NOX	SO2	PM10	PM2.5	CO2	CH4
Public Area	2024	13,731	0,762	29,822	3,712	0,063	0,102	0,102	6 009,754	1,943
Public Area - SW Pond	2024	2,368	0,461	17,084	1,996	0,038	0,061	0,061	3 638,437	1,177
Western Entrance	2024	1,317	0,211	8,671	1,218	0,018	0,028	0,028	1 665,884	0,538
Shared Site Utilities	2024	2,368	0,461	17,084	1,996	0,038	0,061	0,061	3 638,437	1,177
Compost Facility	2025	3,453	0,762	29,822	3,300	0,063	0,102	0,102	6 008,286	1,943
Compost Facility - SW Pond	2025	2,943	0,466	20,869	2,017	0,039	0,062	0,062	3 689,107	1,190
Landfill Construction	2028	9,301	2,012	76,152	8,719	0,168	0,268	0,268	15 872,857	5,137
Landfill Lining & Partial Closure	2029	41,338	2,483	107,169	10,760	0,214	0,331	0,331	20 221,026	5,473
Recovered Materials Storage	2029	12,809	0,293	13,124	3,712	0,022	0,030	0,030	2 002,154	0,538
HHW Storage	2029	3,303	0,140	7,851	0,605	0,012	0,019	0,019	1 149,120	0,357
Primary Maintenance Facility	2033	13,239	0,211	8,671	1,218	0,021	0,028	0,028	1 994,695	0,087
Stockpile Relocation	2033	41,897	0,932	34,176	4,039	0,078	0,124	0,124	8 828,335	0,357

Note: Assumes element and associated stormwater pond are built concurrently (excavation is associated with pond construction), as opposed to sequentially.

WPWMA EIR
Construction Emissions - Proposed Project Exhaust Emissions
Plan Concept 2

Assumptions:

Construction Schedule:	4	weeks/month
	5	days/week
	8	hrs/day
Unit Conversion:	453,592	g/lb

= manual input
= max value (conditional formatting)

Additional travel other than equipment operation is minimal and not included in this analysis.
Since construction contractors would be large operators of diesel off-road equipment, all off-road diesel equipment would be compliant with CARB requirements at the time of construction.
After 2020, all off-road diesel construction equipment would meet Tier 4 Final emission standards.

Main Entrance

Construction Period:	01.01.2024	to	
Number of workers:		Duration (weeks):	

Off Road Equipment Type	Area Size	Number (ea)	Daily Hours	Annual Days Equipment Used
Demolition	***1 ac***	***4***	***21***	***20***
Excavators	1	0	0	0
Rubber Tired Dozers	1	1	1	20
Concrete/Industrial Saws	1	1	8	20
Tractors/Loaders/Backhoes	1	2	6	20
Site Preparation (2 ac)	***2 ac***	***3***	***23***	***3***
Graders	2	1	8	3
Tractors/Loaders/Backhoes	2	1	8	3
Rubber Tired Dozers	2	1	7	3
Scrapers	2	0	0	0
Grading (2 ac)	***2 ac***	***3***	***19***	***6***
Rubber Tired Dozers	2	1	6	6
Concrete/Industrial Saws	2	0	0	0
Tractors/Loaders/Backhoes	2	1	7	6
Graders	2	1	6	6
Excavators	2	0	0	0
Scrapers	2	0	0	0
Building Construction (0 ac)	***0 ac***	***0***	***0***	***0***
Cranes	0	0	0	0
Forklifts	0	0	0	0
Tractors/Loaders/Backhoes	0	0	0	0
Welders	0	0	0	0
Generator Sets	0	0	0	0
Paving - Asphalt (2 ac)	***2 ac***	***5***	***35***	***10***
Pavers	2	1	6	10
Cement and Mortar Mixers	2	1	6	10
Rollers	2	1	7	10
Tractors/Loaders/Backhoes	2	1	8	10
Paving Equipment	2	1	8	10
Paving - Concrete (1 ac)	***1 ac***	***7***	***45***	***10***
Pavers	1	1	7	10
Cement and Mortar Mixers	1	4	6	10
Rollers	1	1	7	10
Tractors/Loaders/Backhoes	1	1	7	10
Paving Equipment	1	0	0	0
Site Preparation - Pond (0 ac)	***0 ac***	***0***	***0***	***0***
Graders	0	0	0	0
Tractors/Loaders/Backhoes	0	0	0	0
Rubber Tired Dozers	0	0	0	0
Scrapers	0	0	0	0
Excavation (0 cy)	***0 cy***	***0***	***0***	***0***
Scrapers	0	0	0	0
Rubber Tired Dozers	0	0	0	0
Off-Highway Trucks	0	0	0	0
Other General Industrial Equipment	0	0	0	0

Area Size Reference Table	Size	Unit
Demolition	1	ac
Site Preparation	2	ac
Grading	2	ac
Building Construction	0	ac
Paving - Asphalt	2	ac
Paving - Concrete	1	ac
Site Preparation - Pond	0	ac
Excavation	0	cy

WPWMA EIR
Construction Emissions - Proposed Project Exhaust Emissions

Main Entrance

Emission Factors					Emissions Factor (g/bhp-hr)								
Equipment Type	**HorsePower**	**Load Factor**	**Construction Year**	**Year+Equipment Type+HorsePower**	**CO**	**NOX**	**PM10**	**PM2.5**	**ROG**	**TOG**	**SO2**	**CO2**	**CH4**
Demolition													
Excavators													
Rubber Tired Dozers	247	0,4	2024	2024Rubber Tired Dozers250	2,20E+00	2,60E-01	8,00E-03	8,00E-03	6,00E-02	4,75E-01	5,00E-03	4,75E+02	1,53E-01
Concrete/Industrial Saws	81	0,73	2024	2024Concrete/Industrial Saws120	3,70E+00	2,60E-01	8,00E-03	8,00E-03	6,00E-02	3,02E+00	6,00E-03	5,68E+02	2,70E-02
Tractors/Loaders/Backhoes	97	0,37	2024	2024Tractors/Loaders/Backhoes120	3,70E+00	2,60E-01	8,00E-03	8,00E-03	6,00E-02	2,71E-01	5,00E-03	4,77E+02	1,54E-01
Site Preparation (2 ac)													
Graders	187	0,41	2024	2024Graders250	2,20E+00	2,60E-01	8,00E-03	8,00E-03	6,00E-02	3,12E-01	5,00E-03	4,74E+02	1,53E-01
Tractors/Loaders/Backhoes	97	0,37	2024	2024Tractors/Loaders/Backhoes120	3,70E+00	2,60E-01	8,00E-03	8,00E-03	6,00E-02	2,71E-01	5,00E-03	4,77E+02	1,54E-01
Rubber Tired Dozers	247	0,4	2024	2024Rubber Tired Dozers250	2,20E+00	2,60E-01	8,00E-03	8,00E-03	6,00E-02	4,75E-01	5,00E-03	4,75E+02	1,53E-01
Scrapers													
Grading (2 ac)													
Rubber Tired Dozers	247	0,4	2024	2024Rubber Tired Dozers250	2,20E+00	2,60E-01	8,00E-03	8,00E-03	6,00E-02	4,75E-01	5,00E-03	4,75E+02	1,53E-01
Concrete/Industrial Saws													
Tractors/Loaders/Backhoes	97	0,37	2024	2024Tractors/Loaders/Backhoes120	3,70E+00	2,60E-01	8,00E-03	8,00E-03	6,00E-02	2,71E-01	5,00E-03	4,77E+02	1,54E-01
Graders	187	0,41	2024	2024Graders250	2,20E+00	2,60E-01	8,00E-03	8,00E-03	6,00E-02	3,12E-01	5,00E-03	4,74E+02	1,53E-01
Excavators													
Scrapers													
Building Construction (0 ac)													
Cranes													
Forklifts													
Tractors/Loaders/Backhoes													
Welders													
Generator Sets													
Paving - Asphalt (2 ac)													
Pavers	130	0,42	2024	2024Pavers175	2,20E+00	2,60E-01	8,00E-03	8,00E-03	6,00E-02	2,27E-01	5,00E-03	4,73E+02	1,53E-01
Cement and Mortar Mixers	9	0,56	2024	2024Cement and Mortar Mixers15	4,10E+00	2,75E+00	8,00E-03	8,00E-03	1,20E-01	1,08E+00	8,00E-03	5,68E+02	5,90E-02
Rollers	80	0,38	2024	2024Rollers120	3,70E+00	2,60E-01	8,00E-03	8,00E-03	6,00E-02	3,23E-01	5,00E-03	4,74E+02	1,53E-01
Tractors/Loaders/Backhoes	97	0,37	2024	2024Tractors/Loaders/Backhoes120	3,70E+00	2,60E-01	8,00E-03	8,00E-03	6,00E-02	2,71E-01	5,00E-03	4,77E+02	1,54E-01
Paving Equipment	132	0,36	2024	2024Paving Equipment175	2,20E+00	2,60E-01	8,00E-03	8,00E-03	6,00E-02	2,34E-01	5,00E-03	4,71E+02	1,52E-01
Paving - Concrete (1 ac)													
Pavers	130	0,42	2024	2024Pavers175	2,20E+00	2,60E-01	8,00E-03	8,00E-03	6,00E-02	2,27E-01	5,00E-03	4,73E+02	1,53E-01
Cement and Mortar Mixers	9	0,56	2024	2024Cement and Mortar Mixers15	4,10E+00	2,75E+00	8,00E-03	8,00E-03	1,20E-01	1,08E+00	8,00E-03	5,68E+02	5,90E-02
Rollers	80	0,38	2024	2024Rollers120	3,70E+00	2,60E-01	8,00E-03	8,00E-03	6,00E-02	3,23E-01	5,00E-03	4,74E+02	1,53E-01
Tractors/Loaders/Backhoes	97	0,37	2024	2024Tractors/Loaders/Backhoes120	3,70E+00	2,60E-01	8,00E-03	8,00E-03	6,00E-02	2,71E-01	5,00E-03	4,77E+02	1,54E-01
Paving Equipment													
Site Preparation - Pond (0 ac)													
Graders													
Tractors/Loaders/Backhoes													
Rubber Tired Dozers													
Scrapers													
Excavation (0 cy)													
Scrapers													
Rubber Tired Dozers													
Off-Highway Trucks													
Other General Industrial Equipr													

WPWMA EIR
Construction Emissions - Proposed Project Exhaust Emissions

Main Entrance

	Hourly Emissions (lb/hr)									Daily Emissions (lb/day)									Annual Emissions (lb/yr)								
Equipment Type	**TOG**	**ROG**	**CO**	**NOX**	**SO2**	**PM10**	**PM2.5**	**CO2**	**CH4**	**TOG**	**ROG**	**CO**	**NOX**	**SO2**	**PM10**	**PM2.5**	**CO2**	**CH4**	**TOG**	**ROG**	**CO**	**NOX**	**SO2**	**PM10**	**PM2.5**	**CO2**	**CH4**
Demolition																											
Excavators																											
Rubber Tired Dozers	0,103	0,013	0,479	0,057	0,001	0,002	0,002	103,373	0,033	0,103	0,013	0,479	0,057	0,001	0,002	0,002	103,373	0,033	2,068	0,261	9,584	1,133	0,022	0,035	0,035	2 067,454	0,667
Concrete/Industrial Saws	0,394	0,008	0,482	0,034	0,001	0,001	0,001	74,083	0,004	3,153	0,063	3,859	0,271	0,006	0,008	0,008	592,665	0,028	63,052	1,251	77,173	5,423	0,125	0,167	0,167	11 853,302	0,563
Tractors/Loaders/Backhoes	0,043	0,009	0,586	0,041	0,001	0,001	0,001	75,442	0,024	0,257	0,057	3,513	0,247	0,005	0,008	0,008	452,650	0,146	5,139	1,139	70,262	4,937	0,095	0,152	0,152	9 053,010	2,924
Site Preparation (2 ac)																											
Graders	0,053	0,010	0,372	0,044	0,001	0,001	0,001	80,064	0,026	0,422	0,081	2,975	0,352	0,007	0,011	0,011	640,508	0,207	1,266	0,243	8,925	1,055	0,020	0,032	0,032	1 921,524	0,621
Tractors/Loaders/Backhoes	0,021	0,005	0,293	0,021	0,000	0,001	0,001	37,721	0,012	0,171	0,038	2,342	0,165	0,003	0,005	0,005	301,767	0,097	0,514	0,114	7,026	0,494	0,009	0,015	0,015	905,301	0,292
Rubber Tired Dozers	0,103	0,013	0,479	0,057	0,001	0,002	0,002	103,373	0,033	0,724	0,091	3,354	0,396	0,008	0,012	0,012	723,609	0,233	2,171	0,274	10,063	1,189	0,023	0,037	0,037	2 170,827	0,700
Scrapers																											
Grading (2 ac)																											
Rubber Tired Dozers	0,103	0,013	0,479	0,057	0,001	0,002	0,002	103,373	0,033	0,620	0,078	2,875	0,340	0,007	0,010	0,010	620,236	0,200	3,722	0,470	17,251	2,039	0,039	0,063	0,063	3 721,418	1,200
Concrete/Industrial Saws																											
Tractors/Loaders/Backhoes	0,021	0,005	0,293	0,021	0,000	0,001	0,001	37,721	0,012	0,150	0,033	2,049	0,144	0,003	0,004	0,004	264,046	0,085	0,899	0,199	12,296	0,864	0,017	0,027	0,027	1 584,277	0,512
Graders	0,053	0,010	0,372	0,044	0,001	0,001	0,001	80,064	0,026	0,316	0,061	2,231	0,264	0,005	0,008	0,008	480,381	0,155	1,899	0,365	13,387	1,582	0,030	0,049	0,049	2 882,286	0,931
Excavators																											
Scrapers																											
Building Construction (0 ac)																											
Cranes																											
Forklifts																											
Tractors/Loaders/Backhoes																											
Welders																											
Generator Sets																											
Paving - Asphalt (2 ac)																											
Pavers	0,027	0,007	0,265	0,031	0,001	0,001	0,001	56,895	0,018	0,164	0,043	1,589	0,188	0,004	0,006	0,006	341,372	0,111	1,639	0,433	15,889	1,878	0,036	0,058	0,058	3 413,719	1,105
Cement and Mortar Mixers	0,012	0,001	0,046	0,031	0,000	0,000	0,000	6,315	0,001	0,072	0,008	0,273	0,183	0,001	0,001	0,001	37,887	0,004	0,717	0,080	2,733	1,833	0,005	0,005	0,005	378,873	0,039
Rollers	0,022	0,004	0,248	0,017	0,000	0,001	0,001	31,768	0,010	0,152	0,028	1,736	0,122	0,002	0,004	0,004	222,378	0,072	1,517	0,281	17,358	1,220	0,023	0,038	0,038	2 223,777	0,718
Tractors/Loaders/Backhoes	0,021	0,005	0,293	0,021	0,000	0,001	0,001	37,721	0,012	0,171	0,038	2,342	0,165	0,003	0,005	0,005	301,767	0,097	1,713	0,380	23,421	1,646	0,032	0,051	0,051	3 017,670	0,975
Paving Equipment	0,025	0,006	0,230	0,027	0,001	0,001	0,001	49,308	0,016	0,196	0,050	1,844	0,218	0,004	0,007	0,007	394,466	0,127	1,961	0,503	18,438	2,179	0,042	0,067	0,067	3 944,660	1,274
Paving - Concrete (1 ac)																											
Pavers	0,027	0,007	0,265	0,031	0,001	0,001	0,001	56,895	0,018	0,191	0,051	1,854	0,219	0,004	0,007	0,007	398,267	0,129	1,912	0,506	18,537	2,191	0,042	0,067	0,067	3 982,673	1,289
Cement and Mortar Mixers	0,048	0,005	0,182	0,122	0,000	0,000	0,000	25,258	0,003	0,287	0,032	1,093	0,733	0,002	0,002	0,002	151,549	0,016	2,867	0,320	10,934	7,333	0,021	0,021	0,021	1 515,491	0,157
Rollers	0,022	0,004	0,248	0,017	0,000	0,001	0,001	31,768	0,010	0,152	0,028	1,736	0,122	0,002	0,004	0,004	222,378	0,072	1,517	0,281	17,358	1,220	0,023	0,038	0,038	2 223,777	0,718
Tractors/Loaders/Backhoes	0,021	0,005	0,293	0,021	0,000	0,001	0,001	37,721	0,012	0,150	0,033	2,049	0,144	0,003	0,004	0,004	264,046	0,085	1,499	0,332	20,493	1,440	0,028	0,044	0,044	2 640,461	0,853
Paving Equipment																											
Site Preparation - Pond (0 ac)																											
Graders																											
Tractors/Loaders/Backhoes																											
Rubber Tired Dozers																											
Scrapers																											
Excavation (0 cy)																											
Scrapers																											
Rubber Tired Dozers																											
Off-Highway Trucks																											
Other General Industrial Equipr																											

Total per Phase																											
Demolition	0,540	0,030	1,547	0,132	0,003	0,004	0,004	252,898	0,061	3,513	0,133	7,851	0,575	0,012	0,018	0,018	1 148,688	0,208	70,259	2,652	157,019	11,493	0,242	0,354	0,354	22 973,766	4,154
Site Preparation	0,178	0,028	1,144	0,121	0,002	0,004	0,004	221,157	0,071	1,317	0,211	8,671	0,913	0,018	0,028	0,028	1 665,884	0,538	3,951	0,632	26,014	2,738	0,053	0,084	0,084	4 997,652	1,613
Grading	0,178	0,028	1,144	0,121	0,002	0,004	0,004	221,157	0,071	1,087	0,172	7,156	0,747	0,014	0,023	0,023	1 364,663	0,440	6,521	1,035	42,934	4,485	0,086	0,138	0,138	8 187,981	2,643
Building Construction	0,000	0,000	0,000	0,000	0,000	0,000	0,000	0,000	0,000	0,000	0,000	0,000	0,000	0,000	0,000	0,000	0,000	0,000	0,000	0,000	0,000	0,000	0,000	0,000	0,000	0,000	0,000
Paving - Asphalt	0,107	0,024	1,082	0,127	0,002	0,003	0,003	182,007	0,057	0,755	0,168	7,784	0,876	0,014	0,022	0,022	1 297,870	0,411	7,546	1,677	77,840	8,756	0,138	0,218	0,218	12 978,699	4,111
Paving - Concrete	0,118	0,021	0,988	0,192	0,002	0,002	0,002	151,643	0,043	0,779	0,144	6,732	1,218	0,011	0,017	0,017	1 036,240	0,302	7,795	1,439	67,322	12,184	0,115	0,171	0,171	10 362,401	3,017
Site Preparation - Pond	0,000	0,000	0,000	0,000	0,000	0,000	0,000	0,000	0,000	0,000	0,000	0,000	0,000	0,000	0,000	0,000	0,000	0,000	0,000	0,000	0,000	0,000	0,000	0,000	0,000	0,000	0,000
Excavation	0,000	0,000	0,000	0,000	0,000	0,000	0,000	0,000	0,000	0,000	0,000	0,000	0,000	0,000	0,000	0,000	0,000	0,000	0,000	0,000	0,000	0,000	0,000	0,000	0,000	0,000	0,000
Total																			**96,072**	**7,436**	**371,129**	**39,655**	**0,634**	**0,965**	**0,965**	**59 500**	**15,538**

WPWMA EIR
Construction Emissions - Proposed Project Exhaust Emissions
Plan Concept 2

New SW Ponds

Construction Period:	01.01.2024	to	
Number of workers:		Duration (weeks):	

Off Road Equipment Type	Area Size	Number (ea)	Daily Hours	Annual Days Equipment Used
Demolition				
Scraper - CAT 657				
Water Truck - 4000 gal, 3 axle, 58000 gvw				
Site Preparation (0 ac)	***0 ac***	***0***	***0***	***0***
Graders	0	0	0	0
Tractors/Loaders/Backhoes	0	0	0	0
Rubber Tired Dozers	0	0	0	0
Scrapers	0	0	0	0
Grading (0 ac)	***0 ac***	***0***	***0***	***0***
Rubber Tired Dozers	0	0	0	0
Concrete/Industrial Saws	0	0	0	0
Tractors/Loaders/Backhoes	0	0	0	0
Graders	0	0	0	0
Excavators	0	0	0	0
Scrapers	0	0	0	0
Building Construction (0 ac)	***0 ac***	***0***	***0***	***0***
Cranes	0	0	0	0
Forklifts	0	0	0	0
Tractors/Loaders/Backhoes	0	0	0	0
Welders	0	0	0	0
Generator Sets	0	0	0	0
Paving - Asphalt (0 ac)	***0 ac***	***0***	***0***	***0***
Pavers	0	0	0	0
Cement and Mortar Mixers	0	0	0	0
Rollers	0	0	0	0
Tractors/Loaders/Backhoes	0	0	0	0
Paving Equipment	0	0	0	0
Paving - Concrete (0 ac)	***0 ac***	***0***	***0***	***0***
Pavers	0	0	0	0
Cement and Mortar Mixers	0	0	0	0
Rollers	0	0	0	0
Tractors/Loaders/Backhoes	0	0	0	0
Paving Equipment	0	0	0	0
Site Preparation - Pond (9 ac)	***9 ac***	***7***	***56***	***10***
Graders	9	0	0	0
Tractors/Loaders/Backhoes	9	4	8	10
Rubber Tired Dozers	9	3	8	10
Scrapers	9	0	0	0
Excavation (96342 cy)	***96342 cy***	***4***	***26***	***10***
Scrapers	96342	1	8	10
Rubber Tired Dozers	96342	1	8	10
Off-Highway Trucks	96342	1	8	10
Other General Industrial Equipment	96342	1	2	10

Area Size Reference Table	Size	Unit
Site Preparation	0	ac
Grading	0	ac
Building Construction	0	ac
Paving - Asphalt	0	ac
Paving - Concrete	0	ac
Site Preparation - Pond	9	ac
Excavation	96 342	cy

WPWMA EIR
Construction Emissions - Proposed Project Exhaust Emissions

New SW Ponds

Emission Factors					Emissions Factor (g/bhp-hr)								
Equipment Type	HorsePower	Load Factor	Construction Year	Year+Equipment Type+HorsePower	CO	NOX	PM10	PM2.5	ROG	TOG	SO2	CO2	CH4
Demolition													
Site Preparation (0 ac)													
Graders													
Tractors/Loaders/Backhoes													
Rubber Tired Dozers													
Scrapers													
Grading (0 ac)													
Rubber Tired Dozers													
Concrete/Industrial Saws													
Tractors/Loaders/Backhoes													
Graders													
Excavators													
Scrapers													
Building Construction (0 ac)													
Cranes													
Forklifts													
Tractors/Loaders/Backhoes													
Welders													
Generator Sets													
Paving - Asphalt (0 ac)													
Pavers													
Cement and Mortar Mixers													
Rollers													
Tractors/Loaders/Backhoes													
Paving Equipment													
Paving - Concrete (0 ac)													
Pavers													
Cement and Mortar Mixers													
Rollers													
Tractors/Loaders/Backhoes													
Paving Equipment													
Site Preparation - Pond (9 ac)													
Graders													
Tractors/Loaders/Backhoes	97	0,37	2024	2024Tractors/Loaders/Backhoes120	3,70E+00	2,60E-01	8,00E-03	8,00E-03	6,00E-02	2,71E-01	5,00E-03	4,77E+02	1,54E-01
Rubber Tired Dozers	247	0,4	2024	2024Rubber Tired Dozers250	2,20E+00	2,60E-01	8,00E-03	8,00E-03	6,00E-02	4,75E-01	5,00E-03	4,75E+02	1,53E-01
Scrapers													
Excavation (96342 cy)													
Scrapers	367	0,48	2024	2024Scrapers500	2,20E+00	2,60E-01	8,00E-03	8,00E-03	6,00E-02	2,91E-01	5,00E-03	4,73E+02	1,53E-01
Rubber Tired Dozers	247	0,4	2024	2024Rubber Tired Dozers250	2,20E+00	2,60E-01	8,00E-03	8,00E-03	6,00E-02	4,75E-01	5,00E-03	4,75E+02	1,53E-01
Off-Highway Trucks	402	0,38	2024	2024Off-Highway Trucks500	2,20E+00	2,60E-01	8,00E-03	8,00E-03	6,00E-02	2,20E-01	5,00E-03	4,75E+02	1,54E-01
Other General Industrial Equipn	88	0,34	2024	2024Other General Industrial Equipment1	3,70E+00	2,60E-01	8,00E-03	8,00E-03	6,00E-02	3,42E-01	5,00E-03	4,70E+02	1,52E-01

WPWMA EIR
Construction Emissions - Proposed Project Exhaust Emissions

New SW Ponds

	Hourly Emissions (lb/hr)									Daily Emissions (lb/day)									Annual Emissions (lb/yr)								
Equipment Type	**TOG**	**ROG**	**CO**	**NOX**	**SO2**	**PM10**	**PM2.5**	**CO2**	**CH4**	**TOG**	**ROG**	**CO**	**NOX**	**SO2**	**PM10**	**PM2.5**	**CO2**	**CH4**	**TOG**	**ROG**	**CO**	**NOX**	**SO2**	**PM10**	**PM2.5**	**CO2**	**CH4**
Demolition																											
Site Preparation (0 ac)																											
Graders																											
Tractors/Loaders/Backhoes																											
Rubber Tired Dozers																											
Scrapers																											
Grading (0 ac)																											
Rubber Tired Dozers																											
Concrete/Industrial Saws																											
Tractors/Loaders/Backhoes																											
Graders																											
Excavators																											
Scrapers																											
Building Construction (0 ac)																											
Cranes																											
Forklifts																											
Tractors/Loaders/Backhoes																											
Welders																											
Generator Sets																											
Paving - Asphalt (0 ac)																											
Pavers																											
Cement and Mortar Mixers																											
Rollers																											
Tractors/Loaders/Backhoes																											
Paving Equipment																											
Paving - Concrete (0 ac)																											
Pavers																											
Cement and Mortar Mixers																											
Rollers																											
Tractors/Loaders/Backhoes																											
Paving Equipment																											
Site Preparation - Pond (9 ac)																											
Graders																											
Tractors/Loaders/Backhoes	0,086	0,019	1,171	0,082	0,002	0,003	0,003	150,883	0,049	0,685	0,152	9,368	0,658	0,013	0,020	0,020	1 207,068	0,390	6,851	1,519	93,683	6,583	0,127	0,203	0,203	12 070,679	3,899
Rubber Tired Dozers	0,310	0,039	1,438	0,170	0,003	0,005	0,005	310,118	0,100	2,482	0,314	11,501	1,359	0,026	0,042	0,042	2 480,945	0,800	24,816	3,137	115,007	13,592	0,261	0,418	0,418	24 809,452	7,998
Scrapers																											
Excavation (96342 cy)																											
Scrapers	0,113	0,023	0,854	0,101	0,002	0,003	0,003	183,637	0,059	0,905	0,186	6,835	0,808	0,016	0,025	0,025	1 469,099	0,475	9,045	1,864	68,353	8,078	0,155	0,249	0,249	14 690,993	4,754
Rubber Tired Dozers	0,103	0,013	0,479	0,057	0,001	0,002	0,002	103,373	0,033	0,827	0,105	3,834	0,453	0,009	0,014	0,014	826,982	0,267	8,272	1,046	38,336	4,531	0,087	0,139	0,139	8 269,817	2,666
Off-Highway Trucks	0,074	0,020	0,741	0,088	0,002	0,003	0,003	160,044	0,052	0,591	0,162	5,927	0,700	0,013	0,022	0,022	1 280,352	0,415	5,915	1,617	59,273	7,005	0,135	0,216	0,216	12 803,516	4,149
Other General Industrial Equipr	0,023	0,004	0,244	0,017	0,000	0,001	0,001	31,002	0,010	0,045	0,008	0,488	0,034	0,001	0,001	0,001	62,005	0,020	0,451	0,079	4,881	0,343	0,007	0,011	0,011	620,046	0,201

Total per Phase																											
Site Preparation	0,000	0,000	0,000	0,000	0,000	0,000	0,000	0,000	0,000	0,000	0,000	0,000	0,000	0,000	0,000	0,000	0,000	0,000	0,000	0,000	0,000	0,000	0,000	0,000	0,000	0,000	0,000
Grading	0,000	0,000	0,000	0,000	0,000	0,000	0,000	0,000	0,000	0,000	0,000	0,000	0,000	0,000	0,000	0,000	0,000	0,000	0,000	0,000	0,000	0,000	0,000	0,000	0,000	0,000	0,000
Building Construction	0,000	0,000	0,000	0,000	0,000	0,000	0,000	0,000	0,000	0,000	0,000	0,000	0,000	0,000	0,000	0,000	0,000	0,000	0,000	0,000	0,000	0,000	0,000	0,000	0,000	0,000	0,000
Paving - Asphalt	0,000	0,000	0,000	0,000	0,000	0,000	0,000	0,000	0,000	0,000	0,000	0,000	0,000	0,000	0,000	0,000	0,000	0,000	0,000	0,000	0,000	0,000	0,000	0,000	0,000	0,000	0,000
Paving - Concrete	0,000	0,000	0,000	0,000	0,000	0,000	0,000	0,000	0,000	0,000	0,000	0,000	0,000	0,000	0,000	0,000	0,000	0,000	0,000	0,000	0,000	0,000	0,000	0,000	0,000	0,000	0,000
Site Preparation - Pond	0,396	0,058	2,609	0,252	0,005	0,008	0,008	461,002	0,149	3,167	0,466	20,869	2,017	0,039	0,062	0,062	3 688,013	1,190	31,667	4,656	208,690	20,175	0,388	0,621	0,621	36 880,132	11,897
Excavation	0,313	0,061	2,319	0,262	0,005	0,008	0,008	478,056	0,155	2,368	0,461	17,084	1,996	0,038	0,061	0,061	3 638,437	1,177	23,683	4,605	170,843	19,957	0,384	0,614	0,614	36 384,372	11,769
Total																			**55,350**	**9,261**	**379,533**	**40,132**	**0,772**	**1,235**	**1,235**	**73 264,504**	**23,667**

WPWMA EIR
Construction Emissions - Proposed Project Exhaust Emissions
Plan Concept 2

Unlined Area Excavation (1 of 3)

Construction Period:	01.01.2024	to	
Number of workers:		Duration (weeks):	

Off Road Equipment Type	Area Size	Number (ea)	Daily Hours	Annual Days Equipment Used
Demolition				
Scraper - CAT 657				
Water Truck - 4000 gal, 3 axle, 58000 gvw				
Site Preparation (21 ac)	***21 ac***	***7***	***56***	***10***
Graders	21	0	0	0
Tractors/Loaders/Backhoes	21	4	8	10
Rubber Tired Dozers	21	3	8	10
Scrapers	21	0	0	0
Grading (0 ac)	***0 ac***	***0***	***0***	***0***
Rubber Tired Dozers	0	0	0	0
Concrete/Industrial Saws	0	0	0	0
Tractors/Loaders/Backhoes	0	0	0	0
Graders	0	0	0	0
Excavators	0	0	0	0
Scrapers	0	0	0	0
Building Construction (0 ac)	***0 ac***	***0***	***0***	***0***
Cranes	0	0	0	0
Forklifts	0	0	0	0
Tractors/Loaders/Backhoes	0	0	0	0
Welders	0	0	0	0
Generator Sets	0	0	0	0
Paving - Asphalt (0 ac)	***0 ac***	***0***	***0***	***0***
Pavers	0	0	0	0
Cement and Mortar Mixers	0	0	0	0
Rollers	0	0	0	0
Tractors/Loaders/Backhoes	0	0	0	0
Paving Equipment	0	0	0	0
Paving - Concrete (0 ac)	***0 ac***	***0***	***0***	***0***
Pavers	0	0	0	0
Cement and Mortar Mixers	0	0	0	0
Rollers	0	0	0	0
Tractors/Loaders/Backhoes	0	0	0	0
Paving Equipment	0	0	0	0
Site Preparation - Pond (0 ac)	***0 ac***	***0***	***0***	***0***
Graders	0	0	0	0
Tractors/Loaders/Backhoes	0	0	0	0
Rubber Tired Dozers	0	0	0	0
Scrapers	0	0	0	0
Excavation (1215334 cy)	***1215334 cy***	***16***	***80***	***116***
Scrapers	1215334	4	8	116
Rubber Tired Dozers	1215334	2	8	116
Off-Highway Trucks	1215334	2	8	116
Other General Industrial Equipment	1215334	8	2	116

Area Size Reference Table	Size	Unit
Site Preparation	21	ac
Grading	0	ac
Building Construction	0	ac
Paving - Asphalt	0	ac
Paving - Concrete	0	ac
Site Preparation - Pond	0	ac
Excavation	1 215 334	cy

WPWMA EIR
Construction Emissions - Proposed Project Exhaust Emissions

Unlined Area Excavation (1 of 3)

Emission Factors					Emissions Factor (g/bhp-hr)								
Equipment Type	HorsePower	Load Factor	Construction Year	Year+Equipment Type+HorsePower	CO	NOX	PM10	PM2.5	ROG	TOG	SO2	CO2	CH4
Demolition													
Site Preparation (21 ac)													
Graders													
Tractors/Loaders/Backhoes	97	0,37	2024	2024Tractors/Loaders/Backhoes120	3,70E+00	2,60E-01	8,00E-03	8,00E-03	6,00E-02	2,71E-01	5,00E-03	4,77E+02	1,54E-01
Rubber Tired Dozers	247	0,4	2024	2024Rubber Tired Dozers250	2,20E+00	2,60E-01	8,00E-03	8,00E-03	6,00E-02	4,75E-01	5,00E-03	4,75E+02	1,53E-01
Scrapers													
Grading (0 ac)													
Rubber Tired Dozers													
Concrete/Industrial Saws													
Tractors/Loaders/Backhoes													
Graders													
Excavators													
Scrapers													
Building Construction (0 ac)													
Cranes													
Forklifts													
Tractors/Loaders/Backhoes													
Welders													
Generator Sets													
Paving - Asphalt (0 ac)													
Pavers													
Cement and Mortar Mixers													
Rollers													
Tractors/Loaders/Backhoes													
Paving Equipment													
Paving - Concrete (0 ac)													
Pavers													
Cement and Mortar Mixers													
Rollers													
Tractors/Loaders/Backhoes													
Paving Equipment													
Site Preparation - Pond (0 ac)													
Graders													
Tractors/Loaders/Backhoes													
Rubber Tired Dozers													
Scrapers													
Excavation (1215334 cy)													
Scrapers	367	0,48	2024	2024Scrapers500	2,20E+00	2,60E-01	8,00E-03	8,00E-03	6,00E-02	2,91E-01	5,00E-03	4,73E+02	1,53E-01
Rubber Tired Dozers	247	0,4	2024	2024Rubber Tired Dozers250	2,20E+00	2,60E-01	8,00E-03	8,00E-03	6,00E-02	4,75E-01	5,00E-03	4,75E+02	1,53E-01
Off-Highway Trucks	402	0,38	2024	2024Off-Highway Trucks500	2,20E+00	2,60E-01	8,00E-03	8,00E-03	6,00E-02	2,20E-01	5,00E-03	4,75E+02	1,54E-01
Other General Industrial Equipn	88	0,34	2024	2024Other General Industrial Equipment1	3,70E+00	2,60E-01	8,00E-03	8,00E-03	6,00E-02	3,42E-01	5,00E-03	4,70E+02	1,52E-01

WPWMA EIR
Construction Emissions - Proposed Project Exhaust Emissions

Unlined Area Excavation (1 of 3)

	Hourly Emissions (lb/hr)									Daily Emissions (lb/day)									Annual Emissions (lb/yr)								
Equipment Type	**TOG**	**ROG**	**CO**	**NOX**	**SO2**	**PM10**	**PM2.5**	**CO2**	**CH4**	**TOG**	**ROG**	**CO**	**NOX**	**SO2**	**PM10**	**PM2.5**	**CO2**	**CH4**	**TOG**	**ROG**	**CO**	**NOX**	**SO2**	**PM10**	**PM2.5**	**CO2**	**CH4**
Demolition																											
Site Preparation (21 ac)																											
Graders																											
Tractors/Loaders/Backhoes	0,086	0,019	1,171	0,082	0,002	0,003	0,003	150,883	0,049	0,685	0,152	9,368	0,658	0,013	0,020	0,020	1 207,068	0,390	6,851	1,519	93,683	6,583	0,127	0,203	0,203	12 070,679	3,899
Rubber Tired Dozers	0,310	0,039	1,438	0,170	0,003	0,005	0,005	310,118	0,100	2,482	0,314	11,501	1,359	0,026	0,042	0,042	2 480,945	0,800	24,816	3,137	115,007	13,592	0,261	0,418	0,418	24 809,452	7,998
Scrapers																											
Grading (0 ac)																											
Rubber Tired Dozers																											
Concrete/Industrial Saws																											
Tractors/Loaders/Backhoes																											
Graders																											
Excavators																											
Scrapers																											
Building Construction (0 ac)																											
Cranes																											
Forklifts																											
Tractors/Loaders/Backhoes																											
Welders																											
Generator Sets																											
Paving - Asphalt (0 ac)																											
Pavers																											
Cement and Mortar Mixers																											
Rollers																											
Tractors/Loaders/Backhoes																											
Paving Equipment																											
Paving - Concrete (0 ac)																											
Pavers																											
Cement and Mortar Mixers																											
Rollers																											
Tractors/Loaders/Backhoes																											
Paving Equipment																											
Site Preparation - Pond (0 ac)																											
Graders																											
Tractors/Loaders/Backhoes																											
Rubber Tired Dozers																											
Scrapers																											
Excavation (1215334 cy)																											
Scrapers	0,452	0,093	3,418	0,404	0,008	0,012	0,012	734,550	0,238	3,618	0,746	27,341	3,231	0,062	0,099	0,099	5 876,397	1,901	419,708	86,497	3 171,557	374,820	7,208	11,533	11,533	681 662,092	220,567
Rubber Tired Dozers	0,207	0,026	0,958	0,113	0,002	0,003	0,003	206,745	0,067	1,654	0,209	7,667	0,906	0,017	0,028	0,028	1 653,963	0,533	191,907	24,256	889,390	105,110	2,021	3,234	3,234	191 859,763	61,853
Off-Highway Trucks	0,148	0,040	1,482	0,175	0,003	0,005	0,005	320,088	0,104	1,183	0,323	11,855	1,401	0,027	0,043	0,043	2 560,703	0,830	137,228	37,504	1 375,134	162,516	3,125	5,000	5,000	297 041,562	96,259
Other General Industrial Equipr	0,180	0,032	1,952	0,137	0,003	0,004	0,004	248,018	0,080	0,361	0,063	3,905	0,274	0,005	0,008	0,008	496,037	0,160	41,839	7,346	452,977	31,831	0,612	0,979	0,979	57 540,264	18,609

Total per Phase																											
Site Preparation	0,396	0,058	2,609	0,252	0,005	0,008	0,008	461,002	0,149	3,167	0,466	20,869	2,017	0,039	0,062	0,062	3 688,013	1,190	31,667	4,656	208,690	20,175	0,388	0,621	0,621	36 880,132	11,897
Grading	0,000	0,000	0,000	0,000	0,000	0,000	0,000	0,000	0,000	0,000	0,000	0,000	0,000	0,000	0,000	0,000	0,000	0,000	0,000	0,000	0,000	0,000	0,000	0,000	0,000	0,000	0,000
Building Construction	0,000	0,000	0,000	0,000	0,000	0,000	0,000	0,000	0,000	0,000	0,000	0,000	0,000	0,000	0,000	0,000	0,000	0,000	0,000	0,000	0,000	0,000	0,000	0,000	0,000	0,000	0,000
Paving - Asphalt	0,000	0,000	0,000	0,000	0,000	0,000	0,000	0,000	0,000	0,000	0,000	0,000	0,000	0,000	0,000	0,000	0,000	0,000	0,000	0,000	0,000	0,000	0,000	0,000	0,000	0,000	0,000
Paving - Concrete	0,000	0,000	0,000	0,000	0,000	0,000	0,000	0,000	0,000	0,000	0,000	0,000	0,000	0,000	0,000	0,000	0,000	0,000	0,000	0,000	0,000	0,000	0,000	0,000	0,000	0,000	0,000
Site Preparation - Pond	0,000	0,000	0,000	0,000	0,000	0,000	0,000	0,000	0,000	0,000	0,000	0,000	0,000	0,000	0,000	0,000	0,000	0,000	0,000	0,000	0,000	0,000	0,000	0,000	0,000	0,000	0,000
Excavation	0,987	0,191	7,810	0,829	0,016	0,026	0,026	1 509,401	0,488	6,816	1,341	50,768	5,813	0,112	0,179	0,179	10 587,101	3,425	790,681	155,602	5 889,058	674,277	12,967	20,747	20,747	1 228 103,681	397,289
Total																			**822,348**	**160,258**	**6 097,748**	**694,452**	**13,355**	**21,368**	**21,368**	**1 264 984**	**409,186**

WPWMA EIR
Construction Emissions - Proposed Project Exhaust Emissions
Plan Concept 2

Stockpile Relocation

Construction Period:	01.01.2024	to	
Number of workers:		Duration (weeks):	

Off Road Equipment Type	Area Size	Number (ea)	Daily Hours	Annual Days Equipment Used
Demolition				
Scraper - CAT 657				
Water Truck - 4000 gal, 3 axle, 58000 gvw				
Site Preparation (0 ac)	***0 ac***	***0***	***0***	***0***
Graders	0	0	0	0
Tractors/Loaders/Backhoes	0	0	0	0
Rubber Tired Dozers	0	0	0	0
Scrapers	0	0	0	0
Grading (0 ac)	***0 ac***	***0***	***0***	***0***
Rubber Tired Dozers	0	0	0	0
Concrete/Industrial Saws	0	0	0	0
Tractors/Loaders/Backhoes	0	0	0	0
Graders	0	0	0	0
Excavators	0	0	0	0
Scrapers	0	0	0	0
Building Construction (0 ac)	***0 ac***	***0***	***0***	***0***
Cranes	0	0	0	0
Forklifts	0	0	0	0
Tractors/Loaders/Backhoes	0	0	0	0
Welders	0	0	0	0
Generator Sets	0	0	0	0
Paving - Asphalt (0 ac)	***0 ac***	***0***	***0***	***0***
Pavers	0	0	0	0
Cement and Mortar Mixers	0	0	0	0
Rollers	0	0	0	0
Tractors/Loaders/Backhoes	0	0	0	0
Paving Equipment	0	0	0	0
Paving - Concrete (0 ac)	***0 ac***	***0***	***0***	***0***
Pavers	0	0	0	0
Cement and Mortar Mixers	0	0	0	0
Rollers	0	0	0	0
Tractors/Loaders/Backhoes	0	0	0	0
Paving Equipment	0	0	0	0
Site Preparation - Pond (0 ac)	***0 ac***	***0***	***0***	***0***
Graders	0	0	0	0
Tractors/Loaders/Backhoes	0	0	0	0
Rubber Tired Dozers	0	0	0	0
Scrapers	0	0	0	0
Excavation (0 cy)	***0 cy***	***0***	***0***	***0***
Scrapers	0	0	0	0
Rubber Tired Dozers	0	0	0	0
Off-Highway Trucks	0	0	0	0
Other General Industrial Equipment	0	0	0	0
Stockpile Movement (700000 cy)	***700000 cy***	***5***	***40***	***260***
Scrapers	700000	5	8	260

Area Size Reference Table	Size	Unit
Site Preparation	0	ac
Grading	0	ac
Building Construction	0	ac
Paving - Asphalt	0	ac
Paving - Concrete	0	ac
Site Preparation - Pond	0	ac
Excavation	0	cy
Stockpile Movement	700 000	cy

WPWMA EIR
Construction Emissions - Proposed Project Exhaust Emissions

Stockpile Relocation

Emission Factors					Emissions Factor (g/bhp-hr)								
Equipment Type	**HorsePower**	**Load Factor**	**Construction Year**	**Year+Equipment Type+HorsePower**	**CO**	**NOX**	**PM10**	**PM2.5**	**ROG**	**TOG**	**SO2**	**CO2**	**CH4**
Demolition													
Site Preparation (0 ac)													
Graders													
Tractors/Loaders/Backhoes													
Rubber Tired Dozers													
Scrapers													
Grading (0 ac)													
Rubber Tired Dozers													
Concrete/Industrial Saws													
Tractors/Loaders/Backhoes													
Graders													
Excavators													
Scrapers													
Building Construction (0 ac)													
Cranes													
Forklifts													
Tractors/Loaders/Backhoes													
Welders													
Generator Sets													
Paving - Asphalt (0 ac)													
Pavers													
Cement and Mortar Mixers													
Rollers													
Tractors/Loaders/Backhoes													
Paving Equipment													
Paving - Concrete (0 ac)													
Pavers													
Cement and Mortar Mixers													
Rollers													
Tractors/Loaders/Backhoes													
Paving Equipment													
Site Preparation - Pond (0 ac)													
Graders													
Tractors/Loaders/Backhoes													
Rubber Tired Dozers													
Scrapers													
Excavation (0 cy)													
Scrapers													
Rubber Tired Dozers													
Off-Highway Trucks													
Other General Industrial Equipr													
Stockpile Movement (700000 cy)													
Scrapers	367	0,48	2024	2024Scrapers500	2,20E+00	2,60E-01	8,00E-03	8,00E-03	6,00E-02	2,91E-01	5,00E-03	4,73E+02	1,53E-01

WPWMA EIR
Construction Emissions - Proposed Project Exhaust Emissions

Stockpile Relocation

	Hourly Emissions (lb/hr)									Daily Emissions (lb/day)									Annual Emissions (lb/yr)								
Equipment Type	**TOG**	**ROG**	**CO**	**NOX**	**SO2**	**PM10**	**PM2.5**	**CO2**	**CH4**	**TOG**	**ROG**	**CO**	**NOX**	**SO2**	**PM10**	**PM2.5**	**CO2**	**CH4**	**TOG**	**ROG**	**CO**	**NOX**	**SO2**	**PM10**	**PM2.5**	**CO2**	**CH4**
Demolition																											
Site Preparation (0 ac)																											
Graders																											
Tractors/Loaders/Backhoes																											
Rubber Tired Dozers																											
Scrapers																											
Grading (0 ac)																											
Rubber Tired Dozers																											
Concrete/Industrial Saws																											
Tractors/Loaders/Backhoes																											
Graders																											
Excavators																											
Scrapers																											
Building Construction (0 ac)																											
Cranes																											
Forklifts																											
Tractors/Loaders/Backhoes																											
Welders																											
Generator Sets																											
Paving - Asphalt (0 ac)																											
Pavers																											
Cement and Mortar Mixers																											
Rollers																											
Tractors/Loaders/Backhoes																											
Paving Equipment																											
Paving - Concrete (0 ac)																											
Pavers																											
Cement and Mortar Mixers																											
Rollers																											
Tractors/Loaders/Backhoes																											
Paving Equipment																											
Site Preparation - Pond (0 ac)																											
Graders																											
Tractors/Loaders/Backhoes																											
Rubber Tired Dozers																											
Scrapers																											
Excavation (0 cy)																											
Scrapers																											
Rubber Tired Dozers																											
Off-Highway Trucks																											
Other General Industrial Equip																											
Stockpile Movement (700000 cy)																											
Scrapers	0,565	0,117	4,272	0,505	0,010	0,016	0,016	918,187	0,297	4,523	0,932	34,176	4,039	0,078	0,124	0,124	7 345,497	2,377	1 175,906	242,341	8 885,829	1 050,143	20,195	32,312	32,312	1 909 829,137	617,969

Total per Phase																											
Site Preparation	0,000	0,000	0,000	0,000	0,000	0,000	0,000	0,000	0,000	0,000	0,000	0,000	0,000	0,000	0,000	0,000	0,000	0,000	0,000	0,000	0,000	0,000	0,000	0,000	0,000	0,000	0,000
Grading	0,000	0,000	0,000	0,000	0,000	0,000	0,000	0,000	0,000	0,000	0,000	0,000	0,000	0,000	0,000	0,000	0,000	0,000	0,000	0,000	0,000	0,000	0,000	0,000	0,000	0,000	0,000
Building Construction	0,000	0,000	0,000	0,000	0,000	0,000	0,000	0,000	0,000	0,000	0,000	0,000	0,000	0,000	0,000	0,000	0,000	0,000	0,000	0,000	0,000	0,000	0,000	0,000	0,000	0,000	0,000
Paving - Asphalt	0,000	0,000	0,000	0,000	0,000	0,000	0,000	0,000	0,000	0,000	0,000	0,000	0,000	0,000	0,000	0,000	0,000	0,000	0,000	0,000	0,000	0,000	0,000	0,000	0,000	0,000	0,000
Paving - Concrete	0,000	0,000	0,000	0,000	0,000	0,000	0,000	0,000	0,000	0,000	0,000	0,000	0,000	0,000	0,000	0,000	0,000	0,000	0,000	0,000	0,000	0,000	0,000	0,000	0,000	0,000	0,000
Site Preparation - Pond	0,000	0,000	0,000	0,000	0,000	0,000	0,000	0,000	0,000	0,000	0,000	0,000	0,000	0,000	0,000	0,000	0,000	0,000	0,000	0,000	0,000	0,000	0,000	0,000	0,000	0,000	0,000
Excavation	0,000	0,000	0,000	0,000	0,000	0,000	0,000	0,000	0,000	0,000	0,000	0,000	0,000	0,000	0,000	0,000	0,000	0,000	0,000	0,000	0,000	0,000	0,000	0,000	0,000	0,000	0,000
Stockpile Movement	0,565	0,117	4,272	0,505	0,010	0,016	0,016	918,187	0,297	4,523	0,932	34,176	4,039	0,078	0,124	0,124	7 345,497	2,377	1 175,906	242,341	8 885,829	1 050,143	20,195	32,312	32,312	1 909 829,137	617,969
Total																			**1 175,906**	**242,341**	**8 885,829**	**1 050,143**	**20,195**	**32,312**	**32,312**	**1 909 829**	**617,969**

WPWMA EIR
Construction Emissions - Proposed Project Exhaust Emissions
Plan Concept 2

Public Area

Construction Period:	01.01.2026	to	
Number of workers:		Duration (weeks):	

Off Road Equipment Type	Area Size	Number (ea)	Daily Hours	Annual Days Equipment Used
Demolition	***8 ac***	***6***	***48***	***20***
Excavators	8	3	8	20
Rubber Tired Dozers	8	2	8	20
Concrete/Industrial Saws	8	1	8	20
Tractors/Loaders/Backhoes	8	0	0	0
Site Preparation (15 ac)	***15 ac***	***7***	***56***	***10***
Graders	15	0	0	0
Tractors/Loaders/Backhoes	15	4	8	10
Rubber Tired Dozers	15	3	8	10
Scrapers	15	0	0	0
Grading (15 ac)	***15 ac***	***8***	***64***	***30***
Rubber Tired Dozers	15	1	8	30
Concrete/Industrial Saws	15	0	0	0
Tractors/Loaders/Backhoes	15	2	8	30
Graders	15	1	8	30
Excavators	15	2	8	30
Scrapers	15	2	8	30
Building Construction (2 ac)	***2 ac***	***7***	***50***	***220***
Cranes	2	1	6	220
Forklifts	2	1	6	220
Tractors/Loaders/Backhoes	2	1	6	220
Welders	2	3	8	220
Generator Sets	2	1	8	220
Paving - Asphalt (9 ac)	***9 ac***	***8***	***52***	***20***
Pavers	9	1	8	20
Cement and Mortar Mixers	9	2	6	20
Rollers	9	2	6	20
Tractors/Loaders/Backhoes	9	1	8	20
Paving Equipment	9	2	6	20
Paving - Concrete (2 ac)	***2 ac***	***5***	***35***	***10***
Pavers	2	1	6	10
Cement and Mortar Mixers	2	1	6	10
Rollers	2	1	7	10
Tractors/Loaders/Backhoes	2	1	8	10
Paving Equipment	2	1	8	10
Site Preparation - Pond (2 ac)	***2 ac***	***3***	***23***	***3***
Graders	2	1	8	3
Tractors/Loaders/Backhoes	2	1	8	3
Rubber Tired Dozers	2	1	7	3
Scrapers	2	0	0	0
Excavation (10162 cy)	***10162 cy***	***4***	***26***	***1***
Scrapers	10162	1	8	1
Rubber Tired Dozers	10162	1	8	1
Off-Highway Trucks	10162	1	8	1
Other General Industrial Equipment	10162	1	2	1

Area Size Reference Table	Size	Unit
Demolition	8	ac
Site Preparation	15	ac
Grading	15	ac
Building Construction	2	ac
Paving - Asphalt	9	ac
Paving - Concrete	2	ac
Site Preparation - Pond	2	ac
Excavation	10 162	cy

WPWMA EIR
Construction Emissions - Proposed Project Exhaust Emissions

Public Area

Emission Factors					Emissions Factor (g/bhp-hr)								
Equipment Type	**HorsePower**	**Load Factor**	**Construction Year**	**Year+Equipment Type+HorsePower**	**CO**	**NOX**	**PM10**	**PM2.5**	**ROG**	**TOG**	**SO2**	**CO2**	**CH4**
Demolition													
Excavators	158	0,38	2026	2025Excavators175	2,20E+00	2,60E-01	8,00E-03	8,00E-03	6,00E-02	1,88E-01	5,00E-03	4,72E+02	1,53E-01
Rubber Tired Dozers	247	0,4	2026	2025Rubber Tired Dozers250	2,20E+00	2,60E-01	8,00E-03	8,00E-03	6,00E-02	4,43E-01	5,00E-03	4,75E+02	1,53E-01
Concrete/Industrial Saws	81	0,73	2026	2025Concrete/Industrial Saws120	3,70E+00	2,60E-01	8,00E-03	8,00E-03	6,00E-02	2,85E+00	6,00E-03	5,68E+02	2,50E-02
Tractors/Loaders/Backhoes													
Site Preparation (15 ac)													
Graders													
Tractors/Loaders/Backhoes	97	0,37	2026	2025Tractors/Loaders/Backhoes120	3,70E+00	2,60E-01	8,00E-03	8,00E-03	6,00E-02	2,48E-01	5,00E-03	4,77E+02	1,54E-01
Rubber Tired Dozers	247	0,4	2026	2025Rubber Tired Dozers250	2,20E+00	2,60E-01	8,00E-03	8,00E-03	6,00E-02	4,43E-01	5,00E-03	4,75E+02	1,53E-01
Scrapers													
Grading (15 ac)													
Rubber Tired Dozers	247	0,4	2026	2025Rubber Tired Dozers250	2,20E+00	2,60E-01	8,00E-03	8,00E-03	6,00E-02	4,43E-01	5,00E-03	4,75E+02	1,53E-01
Concrete/Industrial Saws													
Tractors/Loaders/Backhoes	97	0,37	2026	2025Tractors/Loaders/Backhoes120	3,70E+00	2,60E-01	8,00E-03	8,00E-03	6,00E-02	2,48E-01	5,00E-03	4,77E+02	1,54E-01
Graders	187	0,41	2026	2025Graders250	2,20E+00	2,60E-01	8,00E-03	8,00E-03	6,00E-02	2,74E-01	5,00E-03	4,73E+02	1,53E-01
Excavators	158	0,38	2026	2025Excavators175	2,20E+00	2,60E-01	8,00E-03	8,00E-03	6,00E-02	1,88E-01	5,00E-03	4,72E+02	1,53E-01
Scrapers	367	0,48	2026	2025Scrapers500	2,20E+00	2,60E-01	8,00E-03	8,00E-03	6,00E-02	2,57E-01	5,00E-03	4,73E+02	1,53E-01
Building Construction (2 ac)													
Cranes	231	0,29	2026	2025Cranes250	2,20E+00	2,60E-01	8,00E-03	8,00E-03	6,00E-02	3,15E-01	5,00E-03	4,73E+02	1,53E-01
Forklifts	89	0,2	2026	2025Forklifts120	3,70E+00	2,60E-01	8,00E-03	8,00E-03	6,00E-02	3,29E-01	5,00E-03	4,72E+02	1,53E-01
Tractors/Loaders/Backhoes	97	0,37	2026	2025Tractors/Loaders/Backhoes120	3,70E+00	2,60E-01	8,00E-03	8,00E-03	6,00E-02	2,48E-01	5,00E-03	4,77E+02	1,54E-01
Welders	46	0,45	2026	2025Welders50	4,10E+00	2,75E+00	8,00E-03	8,00E-03	1,20E-01	6,32E+00	7,00E-03	5,68E+02	5,40E-02
Generator Sets	84	0,74	2026	2025Generator Sets120	3,70E+00	2,60E-01	8,00E-03	8,00E-03	6,00E-02	4,94E+00	6,00E-03	5,68E+02	2,10E-02
Paving - Asphalt (9 ac)													
Pavers	130	0,42	2026	2025Pavers175	2,20E+00	2,60E-01	8,00E-03	8,00E-03	6,00E-02	2,15E-01	5,00E-03	4,72E+02	1,53E-01
Cement and Mortar Mixers	9	0,56	2026	2025Cement and Mortar Mixers15	4,10E+00	2,75E+00	8,00E-03	8,00E-03	1,20E-01	1,08E+00	8,00E-03	5,68E+02	5,90E-02
Rollers	80	0,38	2026	2025Rollers120	3,70E+00	2,60E-01	8,00E-03	8,00E-03	6,00E-02	3,04E-01	5,00E-03	4,74E+02	1,53E-01
Tractors/Loaders/Backhoes	97	0,37	2026	2025Tractors/Loaders/Backhoes120	3,70E+00	2,60E-01	8,00E-03	8,00E-03	6,00E-02	2,48E-01	5,00E-03	4,77E+02	1,54E-01
Paving Equipment	132	0,36	2026	2025Paving Equipment175	2,20E+00	2,60E-01	8,00E-03	8,00E-03	6,00E-02	2,08E-01	5,00E-03	4,70E+02	1,52E-01
Paving - Concrete (2 ac)													
Pavers	130	0,42	2026	2025Pavers175	2,20E+00	2,60E-01	8,00E-03	8,00E-03	6,00E-02	2,15E-01	5,00E-03	4,72E+02	1,53E-01
Cement and Mortar Mixers	9	0,56	2026	2025Cement and Mortar Mixers15	4,10E+00	2,75E+00	8,00E-03	8,00E-03	1,20E-01	1,08E+00	8,00E-03	5,68E+02	5,90E-02
Rollers	80	0,38	2026	2025Rollers120	3,70E+00	2,60E-01	8,00E-03	8,00E-03	6,00E-02	3,04E-01	5,00E-03	4,74E+02	1,53E-01
Tractors/Loaders/Backhoes	97	0,37	2026	2025Tractors/Loaders/Backhoes120	3,70E+00	2,60E-01	8,00E-03	8,00E-03	6,00E-02	2,48E-01	5,00E-03	4,77E+02	1,54E-01
Paving Equipment	132	0,36	2026	2025Paving Equipment175	2,20E+00	2,60E-01	8,00E-03	8,00E-03	6,00E-02	2,08E-01	5,00E-03	4,70E+02	1,52E-01
Site Preparation - Pond (2 ac)													
Graders	187	0,41	2026	2025Graders250	2,20E+00	2,60E-01	8,00E-03	8,00E-03	6,00E-02	2,74E-01	5,00E-03	4,73E+02	1,53E-01
Tractors/Loaders/Backhoes	97	0,37	2026	2025Tractors/Loaders/Backhoes120	3,70E+00	2,60E-01	8,00E-03	8,00E-03	6,00E-02	2,48E-01	5,00E-03	4,77E+02	1,54E-01
Rubber Tired Dozers	247	0,4	2026	2025Rubber Tired Dozers250	2,20E+00	2,60E-01	8,00E-03	8,00E-03	6,00E-02	4,43E-01	5,00E-03	4,75E+02	1,53E-01
Scrapers													
Excavation (10162 cy)													
Scrapers	367	0,48	2026	2025Scrapers500	2,20E+00	2,60E-01	8,00E-03	8,00E-03	6,00E-02	2,57E-01	5,00E-03	4,73E+02	1,53E-01
Rubber Tired Dozers	247	0,4	2026	2025Rubber Tired Dozers250	2,20E+00	2,60E-01	8,00E-03	8,00E-03	6,00E-02	4,43E-01	5,00E-03	4,75E+02	1,53E-01
Off-Highway Trucks	402	0,38	2026	2025Off-Highway Trucks500	2,20E+00	2,60E-01	8,00E-03	8,00E-03	6,00E-02	2,11E-01	5,00E-03	4,75E+02	1,54E-01
Other General Industrial Equipn	88	0,34	2026	2025Other General Industrial Equipment1	3,70E+00	2,60E-01	8,00E-03	8,00E-03	6,00E-02	3,06E-01	5,00E-03	4,70E+02	1,52E-01

WPWMA EIR
Construction Emissions - Proposed Project Exhaust Emissions

Public Area

	Hourly Emissions (lb/hr)									Daily Emissions (lb/day)									Annual Emissions (lb/yr)								
Equipment Type	**TOG**	**ROG**	**CO**	**NOX**	**SO2**	**PM10**	**PM2.5**	**CO2**	**CH4**	**TOG**	**ROG**	**CO**	**NOX**	**SO2**	**PM10**	**PM2.5**	**CO2**	**CH4**	**TOG**	**ROG**	**CO**	**NOX**	**SO2**	**PM10**	**PM2.5**	**CO2**	**CH4**
Demolition																											
Excavators	0,075	0,024	0,874	0,103	0,002	0,003	0,003	187,627	0,061	0,597	0,191	6,989	0,826	0,016	0,025	0,025	1 501,015	0,486	11,933	3,812	139,778	16,519	0,318	0,508	0,508	30 020,301	9,721
Rubber Tired Dozers	0,193	0,026	0,958	0,113	0,002	0,003	0,003	206,740	0,067	1,543	0,209	7,667	0,906	0,017	0,028	0,028	1 653,922	0,533	30,850	4,182	153,343	18,122	0,349	0,558	0,558	33 078,433	10,664
Concrete/Industrial Saws	0,371	0,008	0,482	0,034	0,001	0,001	0,001	74,083	0,003	2,971	0,063	3,859	0,271	0,006	0,008	0,008	592,666	0,026	59,423	1,251	77,173	5,423	0,125	0,167	0,167	11 853,323	0,521
Tractors/Loaders/Backhoes																											
Site Preparation (15 ac)																											
Graders																											
Tractors/Loaders/Backhoes	0,079	0,019	1,171	0,082	0,002	0,003	0,003	151,028	0,049	0,629	0,152	9,368	0,658	0,013	0,020	0,020	1 208,224	0,390	6,290	1,519	93,683	6,583	0,127	0,203	0,203	12 082,243	3,899
Rubber Tired Dozers	0,289	0,039	1,438	0,170	0,003	0,005	0,005	310,110	0,100	2,314	0,314	11,501	1,359	0,026	0,042	0,042	2 480,882	0,800	23,138	3,137	115,007	13,592	0,261	0,418	0,418	24 808,825	7,998
Scrapers																											
Grading (15 ac)																											
Rubber Tired Dozers	0,096	0,013	0,479	0,057	0,001	0,002	0,002	103,370	0,033	0,771	0,105	3,834	0,453	0,009	0,014	0,014	826,961	0,267	23,138	3,137	115,007	13,592	0,261	0,418	0,418	24 808,825	7,998
Concrete/Industrial Saws																											
Tractors/Loaders/Backhoes	0,039	0,009	0,586	0,041	0,001	0,001	0,001	75,514	0,024	0,314	0,076	4,684	0,329	0,006	0,010	0,010	604,112	0,195	9,435	2,279	140,524	9,875	0,190	0,304	0,304	18 123,364	5,849
Graders	0,046	0,010	0,372	0,044	0,001	0,001	0,001	80,030	0,026	0,370	0,081	2,975	0,352	0,007	0,011	0,011	640,240	0,207	11,107	2,434	89,247	10,547	0,203	0,325	0,325	19 207,204	6,207
Excavators	0,050	0,016	0,582	0,069	0,001	0,002	0,002	125,085	0,041	0,398	0,127	4,659	0,551	0,011	0,017	0,017	1 000,677	0,324	11,933	3,812	139,778	16,519	0,318	0,508	0,508	30 020,301	9,721
Scrapers	0,200	0,047	1,709	0,202	0,004	0,006	0,006	367,037	0,119	1,599	0,373	13,671	1,616	0,031	0,050	0,050	2 936,297	0,951	47,970	11,185	410,115	48,468	0,932	1,491	1,491	88 088,898	28,522
Building Construction (2 ac)																											
Cranes	0,047	0,009	0,325	0,038	0,001	0,001	0,001	69,853	0,023	0,279	0,053	1,949	0,230	0,004	0,007	0,007	419,120	0,136	61,424	11,697	428,885	50,686	0,975	1,560	1,560	92 206,411	29,827
Forklifts	0,013	0,002	0,145	0,010	0,000	0,000	0,000	18,504	0,006	0,078	0,014	0,871	0,061	0,001	0,002	0,002	111,023	0,036	17,062	3,108	191,659	13,468	0,259	0,414	0,414	24 425,108	7,925
Tractors/Loaders/Backhoes	0,020	0,005	0,293	0,021	0,000	0,001	0,001	37,757	0,012	0,118	0,028	1,757	0,123	0,002	0,004	0,004	226,542	0,073	25,945	6,267	386,441	27,155	0,522	0,836	0,836	49 839,252	16,084
Welders	0,865	0,016	0,561	0,376	0,001	0,001	0,001	77,804	0,007	6,917	0,131	4,491	3,012	0,008	0,009	0,009	622,434	0,059	1 521,641	28,915	987,922	662,631	1,687	1,928	1,928	136 935,412	13,012
Generator Sets	0,677	0,008	0,507	0,036	0,001	0,001	0,001	77,879	0,003	5,418	0,066	4,056	0,285	0,007	0,009	0,009	623,035	0,023	1 191,958	14,471	892,401	62,709	1,447	1,930	1,930	137 067,717	5,065
Paving - Asphalt (9 ac)																											
Pavers	0,026	0,007	0,265	0,031	0,001	0,001	0,001	56,874	0,018	0,207	0,058	2,119	0,250	0,005	0,008	0,008	454,994	0,147	4,137	1,156	42,371	5,007	0,096	0,154	0,154	9 099,872	2,947
Cement and Mortar Mixers	0,024	0,003	0,091	0,061	0,000	0,000	0,000	12,629	0,001	0,143	0,016	0,547	0,367	0,001	0,001	0,001	75,775	0,008	2,867	0,320	10,934	7,333	0,021	0,021	0,021	1 515,491	0,157
Rollers	0,041	0,008	0,496	0,035	0,001	0,001	0,001	63,516	0,021	0,244	0,048	2,976	0,209	0,004	0,006	0,006	381,093	0,123	4,890	0,965	59,514	4,182	0,080	0,129	0,129	7 621,865	2,461
Tractors/Loaders/Backhoes	0,020	0,005	0,293	0,021	0,000	0,001	0,001	37,757	0,012	0,157	0,038	2,342	0,165	0,003	0,005	0,005	302,056	0,097	3,145	0,760	46,841	3,292	0,063	0,101	0,101	6 041,121	1,950
Paving Equipment	0,044	0,013	0,461	0,054	0,001	0,002	0,002	98,579	0,032	0,262	0,075	2,766	0,327	0,006	0,010	0,010	591,477	0,191	5,241	1,509	55,315	6,537	0,126	0,201	0,201	11 829,531	3,822
Paving - Concrete (2 ac)																											
Pavers	0,026	0,007	0,265	0,031	0,001	0,001	0,001	56,874	0,018	0,155	0,043	1,589	0,188	0,004	0,006	0,006	341,245	0,111	1,551	0,433	15,889	1,878	0,036	0,058	0,058	3 412,452	1,105
Cement and Mortar Mixers	0,012	0,001	0,046	0,031	0,000	0,000	0,000	6,315	0,001	0,072	0,008	0,273	0,183	0,001	0,001	0,001	37,887	0,004	0,717	0,080	2,733	1,833	0,005	0,005	0,005	378,873	0,039
Rollers	0,020	0,004	0,248	0,017	0,000	0,001	0,001	31,758	0,010	0,143	0,028	1,736	0,122	0,002	0,004	0,004	222,304	0,072	1,426	0,281	17,358	1,220	0,023	0,038	0,038	2 223,044	0,718
Tractors/Loaders/Backhoes	0,020	0,005	0,293	0,021	0,000	0,001	0,001	37,757	0,012	0,157	0,038	2,342	0,165	0,003	0,005	0,005	302,056	0,097	1,572	0,380	23,421	1,646	0,032	0,051	0,051	3 020,561	0,975
Paving Equipment	0,022	0,006	0,230	0,027	0,001	0,001	0,001	49,290	0,016	0,175	0,050	1,844	0,218	0,004	0,007	0,007	394,318	0,127	1,747	0,503	18,438	2,179	0,042	0,067	0,067	3 943,177	1,274
Site Preparation - Pond (2 ac)																											
Graders	0,046	0,010	0,372	0,044	0,001	0,001	0,001	80,030	0,026	0,370	0,081	2,975	0,352	0,007	0,011	0,011	640,240	0,207	1,111	0,243	8,925	1,055	0,020	0,032	0,032	1 920,720	0,621
Tractors/Loaders/Backhoes	0,020	0,005	0,293	0,021	0,000	0,001	0,001	37,757	0,012	0,157	0,038	2,342	0,165	0,003	0,005	0,005	302,056	0,097	0,472	0,114	7,026	0,494	0,009	0,015	0,015	906,168	0,292
Rubber Tired Dozers	0,096	0,013	0,479	0,057	0,001	0,002	0,002	103,370	0,033	0,675	0,091	3,354	0,396	0,008	0,012	0,012	723,591	0,233	2,025	0,274	10,063	1,189	0,023	0,037	0,037	2 170,772	0,700
Scrapers																											
Excavation (10162 cy)																											
Scrapers	0,100	0,023	0,854	0,101	0,002	0,003	0,003	183,519	0,059	0,800	0,186	6,835	0,808	0,016	0,025	0,025	1 468,148	0,475	0,800	0,186	6,835	0,808	0,016	0,025	0,025	1 468,148	0,475
Rubber Tired Dozers	0,096	0,013	0,479	0,057	0,001	0,002	0,002	103,370	0,033	0,771	0,105	3,834	0,453	0,009	0,014	0,014	826,961	0,267	0,771	0,105	3,834	0,453	0,009	0,014	0,014	826,961	0,267
Off-Highway Trucks	0,071	0,020	0,741	0,088	0,002	0,003	0,003	159,960	0,052	0,568	0,162	5,927	0,700	0,013	0,022	0,022	1 279,676	0,415	0,568	0,162	5,927	0,700	0,013	0,022	0,022	1 279,676	0,415
Other General Industrial Equipr	0,020	0,004	0,244	0,017	0,000	0,001	0,001	31,002	0,010	0,040	0,008	0,488	0,034	0,001	0,001	0,001	62,005	0,020	0,040	0,008	0,488	0,034	0,001	0,001	0,001	62,005	0,020

Total per Phase																											
Demolition	0,639	0,058	2,314	0,250	0,005	0,008	0,008	468,450	0,131	5,110	0,462	18,515	2,003	0,040	0,062	0,062	3 747,603	1,045	102,206	9,246	370,294	40,065	0,791	1,233	1,233	74 952,057	20,907
Site Preparation	0,368	0,058	2,609	0,252	0,005	0,008	0,008	461,138	0,149	2,943	0,466	20,869	2,017	0,039	0,062	0,062	3 689,107	1,190	29,427	4,656	208,690	20,175	0,388	0,621	0,621	36 891,068	11,897
Grading	0,432	0,095	3,728	0,413	0,008	0,013	0,013	751,036	0,243	3,453	0,762	29,822	3,300	0,063	0,102	0,102	6 008,286	1,943	103,582	22,846	894,672	99,001	1,904	3,046	3,046	180 248,592	58,296
Building Construction	1,621	0,041	1,831	0,481	0,003	0,004	0,004	281,798	0,051	12,809	0,293	13,124	3,712	0,022	0,030	0,030	2 002,154	0,327	2 818,031	64,458	2 887,309	816,650	4,890	6,667	6,667	440 473,900	71,913
Paving - Asphalt	0,154	0,035	1,606	0,202	0,003	0,005	0,005	269,355	0,084	1,014	0,235	10,749	1,318	0,019	0,030	0,030	1 805,394	0,567	20,280	4,709	214,976	26,352	0,387	0,607	0,607	36 107,879	11,336
Paving - Concrete	0,100	0,024	1,082	0,127	0,002	0,003	0,003	181,993	0,057	0,701	0,168	7,784	0,876	0,014	0,022	0,022	1 297,811	0,411	7,014	1,677	77,840	8,756	0,138	0,218	0,218	12 978,106	4,111
Site Preparation - Pond	0,162	0,028	1,144	0,121	0,002	0,004	0,004	221,157	0,071	1,202	0,211	8,671	0,913	0,018	0,028	0,028	1 665,887	0,538	3,607	0,632	26,014	2,738	0,053	0,084	0,084	4 997,661	1,613
Excavation	0,288	0,061	2,319	0,262	0,005	0,008	0,008	477,850	0,155	2,180	0,461	17,084	1,996	0,038	0,061	0,061	3 636,790	1,177	2,180	0,461	17,084	1,996	0,038	0,061	0,061	3 636,790	1,177
Total																			**3 086,325**	**108,684**	**4 696,879**	**1 015,731**	**8,590**	**12,537**	**12,537**	**790 286**	**181,251**

WPWMA EIR
Construction Emissions - Proposed Project Exhaust Emissions
Plan Concept 2

Unlined Area Excavation (3 of 3)

Construction Period:	01.01.2026	to	
Number of workers:		Duration (weeks):	

Off Road Equipment Type	Area Size	Number (ea)	Daily Hours	Annual Days Equipment Used
Demolition				
Scraper - CAT 657				
Water Truck - 4000 gal, 3 axle, 58000 gvw				
Site Preparation (21 ac)	***21 ac***	***7***	***56***	***10***
Graders	21	0	0	0
Tractors/Loaders/Backhoes	21	4	8	10
Rubber Tired Dozers	21	3	8	10
Scrapers	21	0	0	0
Grading (0 ac)	***0 ac***	***0***	***0***	***0***
Rubber Tired Dozers	0	0	0	0
Concrete/Industrial Saws	0	0	0	0
Tractors/Loaders/Backhoes	0	0	0	0
Graders	0	0	0	0
Excavators	0	0	0	0
Scrapers	0	0	0	0
Building Construction (0 ac)	***0 ac***	***0***	***0***	***0***
Cranes	0	0	0	0
Forklifts	0	0	0	0
Tractors/Loaders/Backhoes	0	0	0	0
Welders	0	0	0	0
Generator Sets	0	0	0	0
Paving - Asphalt (0 ac)	***0 ac***	***0***	***0***	***0***
Pavers	0	0	0	0
Cement and Mortar Mixers	0	0	0	0
Rollers	0	0	0	0
Tractors/Loaders/Backhoes	0	0	0	0
Paving Equipment	0	0	0	0
Paving - Concrete (0 ac)	***0 ac***	***0***	***0***	***0***
Pavers	0	0	0	0
Cement and Mortar Mixers	0	0	0	0
Rollers	0	0	0	0
Tractors/Loaders/Backhoes	0	0	0	0
Paving Equipment	0	0	0	0
Site Preparation - Pond (0 ac)	***0 ac***	***0***	***0***	***0***
Graders	0	0	0	0
Tractors/Loaders/Backhoes	0	0	0	0
Rubber Tired Dozers	0	0	0	0
Scrapers	0	0	0	0
Excavation (1215334 cy)	***1215334 cy***	***16***	***80***	***116***
Scrapers	1215334	4	8	116
Rubber Tired Dozers	1215334	2	8	116
Off-Highway Trucks	1215334	2	8	116
Other General Industrial Equipment	1215334	8	2	116

Area Size Reference Table	Size	Unit
Site Preparation	21	ac
Grading	0	ac
Building Construction	0	ac
Paving - Asphalt	0	ac
Paving - Concrete	0	ac
Site Preparation - Pond	0	ac
Excavation	1 215 334	cy

WPWMA EIR
Construction Emissions - Proposed Project Exhaust Emissions

Unlined Area Excavation (3 of 3)

Emission Factors					Emissions Factor (g/bhp-hr)								
Equipment Type	**HorsePower**	**Load Factor**	**Construction Year**	**Year+Equipment Type+HorsePower**	**CO**	**NOX**	**PM10**	**PM2.5**	**ROG**	**TOG**	**SO2**	**CO2**	**CH4**
Demolition													
Site Preparation (21 ac)													
Graders													
Tractors/Loaders/Backhoes	97	0,37	2026	2025Tractors/Loaders/Backhoes120	3,70E+00	2,60E-01	8,00E-03	8,00E-03	6,00E-02	2,48E-01	5,00E-03	4,77E+02	1,54E-01
Rubber Tired Dozers	247	0,4	2026	2025Rubber Tired Dozers250	2,20E+00	2,60E-01	8,00E-03	8,00E-03	6,00E-02	4,43E-01	5,00E-03	4,75E+02	1,53E-01
Scrapers													
Grading (0 ac)													
Rubber Tired Dozers													
Concrete/Industrial Saws													
Tractors/Loaders/Backhoes													
Graders													
Excavators													
Scrapers													
Building Construction (0 ac)													
Cranes													
Forklifts													
Tractors/Loaders/Backhoes													
Welders													
Generator Sets													
Paving - Asphalt (0 ac)													
Pavers													
Cement and Mortar Mixers													
Rollers													
Tractors/Loaders/Backhoes													
Paving Equipment													
Paving - Concrete (0 ac)													
Pavers													
Cement and Mortar Mixers													
Rollers													
Tractors/Loaders/Backhoes													
Paving Equipment													
Site Preparation - Pond (0 ac)													
Graders													
Tractors/Loaders/Backhoes													
Rubber Tired Dozers													
Scrapers													
Excavation (1215334 cy)													
Scrapers	367	0,48	2026	2025Scrapers500	2,20E+00	2,60E-01	8,00E-03	8,00E-03	6,00E-02	2,57E-01	5,00E-03	4,73E+02	1,53E-01
Rubber Tired Dozers	247	0,4	2026	2025Rubber Tired Dozers250	2,20E+00	2,60E-01	8,00E-03	8,00E-03	6,00E-02	4,43E-01	5,00E-03	4,75E+02	1,53E-01
Off-Highway Trucks	402	0,38	2026	2025Off-Highway Trucks500	2,20E+00	2,60E-01	8,00E-03	8,00E-03	6,00E-02	2,11E-01	5,00E-03	4,75E+02	1,54E-01
Other General Industrial Equipn	88	0,34	2026	2025Other General Industrial Equipment3	3,70E+00	2,60E-01	8,00E-03	8,00E-03	6,00E-02	3,06E-01	5,00E-03	4,70E+02	1,52E-01

WPWMA EIR
Construction Emissions - Proposed Project Exhaust Emissions

Unlined Area Excavation (3 of 3)

	Hourly Emissions (lb/hr)									Daily Emissions (lb/day)									Annual Emissions (lb/yr)								
Equipment Type	**TOG**	**ROG**	**CO**	**NOX**	**SO2**	**PM10**	**PM2.5**	**CO2**	**CH4**	**TOG**	**ROG**	**CO**	**NOX**	**SO2**	**PM10**	**PM2.5**	**CO2**	**CH4**	**TOG**	**ROG**	**CO**	**NOX**	**SO2**	**PM10**	**PM2.5**	**CO2**	**CH4**
Demolition																											
Site Preparation (21 ac)																											
Graders																											
Tractors/Loaders/Backhoes	0,079	0,019	1,171	0,082	0,002	0,003	0,003	151,028	0,049	0,629	0,152	9,368	0,658	0,013	0,020	0,020	1 208,224	0,390	6,290	1,519	93,683	6,583	0,127	0,203	0,203	12 082,243	3,899
Rubber Tired Dozers	0,289	0,039	1,438	0,170	0,003	0,005	0,005	310,110	0,100	2,314	0,314	11,501	1,359	0,026	0,042	0,042	2 480,882	0,800	23,138	3,137	115,007	13,592	0,261	0,418	0,418	24 808,825	7,998
Scrapers																											
Grading (0 ac)																											
Rubber Tired Dozers																											
Concrete/Industrial Saws																											
Tractors/Loaders/Backhoes																											
Graders																											
Excavators																											
Scrapers																											
Building Construction (0 ac)																											
Cranes																											
Forklifts																											
Tractors/Loaders/Backhoes																											
Welders																											
Generator Sets																											
Paving - Asphalt (0 ac)																											
Pavers																											
Cement and Mortar Mixers																											
Rollers																											
Tractors/Loaders/Backhoes																											
Paving Equipment																											
Paving - Concrete (0 ac)																											
Pavers																											
Cement and Mortar Mixers																											
Rollers																											
Tractors/Loaders/Backhoes																											
Paving Equipment																											
Site Preparation - Pond (0 ac)																											
Graders																											
Tractors/Loaders/Backhoes																											
Rubber Tired Dozers																											
Scrapers																											
Excavation (1215334 cy)																											
Scrapers	0,400	0,093	3,418	0,404	0,008	0,012	0,012	734,074	0,238	3,198	0,746	27,341	3,231	0,062	0,099	0,099	5 872,593	1,901	370,968	86,497	3 171,557	374,820	7,208	11,533	11,533	681 220,813	220,567
Rubber Tired Dozers	0,193	0,026	0,958	0,113	0,002	0,003	0,003	206,740	0,067	1,543	0,209	7,667	0,906	0,017	0,028	0,028	1 653,922	0,533	178,931	24,256	889,390	105,110	2,021	3,234	3,234	191 854,912	61,853
Off-Highway Trucks	0,142	0,040	1,482	0,175	0,003	0,005	0,005	319,919	0,104	1,137	0,323	11,855	1,401	0,027	0,043	0,043	2 559,353	0,830	131,860	37,504	1 375,134	162,516	3,125	5,000	5,000	296 884,921	96,259
Other General Industrial Equipr	0,162	0,032	1,952	0,137	0,003	0,004	0,004	248,018	0,080	0,323	0,063	3,905	0,274	0,005	0,008	0,008	496,037	0,160	37,511	7,346	452,977	31,831	0,612	0,979	0,979	57 540,264	18,609

Total per Phase																											
Site Preparation	0,368	0,058	2,609	0,252	0,005	0,008	0,008	461,138	0,149	2,943	0,466	20,869	2,017	0,039	0,062	0,062	3 689,107	1,190	29,427	4,656	208,690	20,175	0,388	0,621	0,621	36 891,068	11,897
Grading	0,000	0,000	0,000	0,000	0,000	0,000	0,000	0,000	0,000	0,000	0,000	0,000	0,000	0,000	0,000	0,000	0,000	0,000	0,000	0,000	0,000	0,000	0,000	0,000	0,000	0,000	0,000
Building Construction	0,000	0,000	0,000	0,000	0,000	0,000	0,000	0,000	0,000	0,000	0,000	0,000	0,000	0,000	0,000	0,000	0,000	0,000	0,000	0,000	0,000	0,000	0,000	0,000	0,000	0,000	0,000
Paving - Asphalt	0,000	0,000	0,000	0,000	0,000	0,000	0,000	0,000	0,000	0,000	0,000	0,000	0,000	0,000	0,000	0,000	0,000	0,000	0,000	0,000	0,000	0,000	0,000	0,000	0,000	0,000	0,000
Paving - Concrete	0,000	0,000	0,000	0,000	0,000	0,000	0,000	0,000	0,000	0,000	0,000	0,000	0,000	0,000	0,000	0,000	0,000	0,000	0,000	0,000	0,000	0,000	0,000	0,000	0,000	0,000	0,000
Site Preparation - Pond	0,000	0,000	0,000	0,000	0,000	0,000	0,000	0,000	0,000	0,000	0,000	0,000	0,000	0,000	0,000	0,000	0,000	0,000	0,000	0,000	0,000	0,000	0,000	0,000	0,000	0,000	0,000
Excavation	0,896	0,191	7,810	0,829	0,016	0,026	0,026	1 508,752	0,488	6,201	1,341	50,768	5,813	0,112	0,179	0,179	10 581,904	3,425	719,270	155,602	5 889,058	674,277	12,967	20,747	20,747	1 227 500,910	397,289
Total																			**748,697**	**160,258**	**6 097,748**	**694,452**	**13,355**	**21,368**	**21,368**	**1 264 391,978**	**409,186**

WPWMA EIR
Construction Emissions - Proposed Project Exhaust Emissions
Plan Concept 2

Landfill Construction

Construction Period:	01.01.2031	to	
Number of workers:		Duration (weeks):	

Off Road Equipment Type	Area Size	Number (ea)	Daily Hours	Annual Days Equipment Used
Demolition				
Scraper - CAT 657				
Water Truck - 4000 gal, 3 axle, 58000 gvw				
Site Preparation (18.11 ac)	***18 ac***	***7***	***56***	***10***
Graders	18	0	0	0
Tractors/Loaders/Backhoes	18	4	8	10
Rubber Tired Dozers	18	3	8	10
Scrapers	18	0	0	0
Grading (18.11 ac)	***18 ac***	***8***	***64***	***30***
Rubber Tired Dozers	18	1	8	30
Concrete/Industrial Saws	18	0	0	0
Tractors/Loaders/Backhoes	18	2	8	30
Graders	18	1	8	30
Excavators	18	2	8	30
Scrapers	18	2	8	30
Building Construction (0 ac)	***0 ac***	***0***	***0***	***0***
Cranes	0	0	0	0
Forklifts	0	0	0	0
Tractors/Loaders/Backhoes	0	0	0	0
Welders	0	0	0	0
Generator Sets	0	0	0	0
Paving - Asphalt (0 ac)	***0 ac***	***0***	***0***	***0***
Pavers	0	0	0	0
Cement and Mortar Mixers	0	0	0	0
Rollers	0	0	0	0
Tractors/Loaders/Backhoes	0	0	0	0
Paving Equipment	0	0	0	0
Paving - Concrete (0 ac)	***0 ac***	***0***	***0***	***0***
Pavers	0	0	0	0
Cement and Mortar Mixers	0	0	0	0
Rollers	0	0	0	0
Tractors/Loaders/Backhoes	0	0	0	0
Paving Equipment	0	0	0	0
Site Preparation - Pond (0 ac)	***0 ac***	***0***	***0***	***0***
Graders	0	0	0	0
Tractors/Loaders/Backhoes	0	0	0	0
Rubber Tired Dozers	0	0	0	0
Scrapers	0	0	0	0
Excavation (1835000 cy)	***1835000 cy***	***24***	***120***	***175***
Scrapers	1835000	6	8	175
Rubber Tired Dozers	1835000	3	8	175
Off-Highway Trucks	1835000	3	8	175
Other General Industrial Equipment	1835000	12	2	175

Area Size Reference Table	Size	Unit
Site Preparation	18	ac
Grading	18	ac
Building Construction	0	ac
Paving - Asphalt	0	ac
Paving - Concrete	0	ac
Site Preparation - Pond	0	ac
Excavation	1 835 000	cy

WPWMA EIR
Construction Emissions - Proposed Project Exhaust Emissions

Landfill Construction

Emission Factors					Emissions Factor (g/bhp-hr)								
Equipment Type	**HorsePower**	**Load Factor**	**Construction Year**	**Year+Equipment Type+HorsePower**	**CO**	**NOX**	**PM10**	**PM2.5**	**ROG**	**TOG**	**SO2**	**CO2**	**CH4**
Demolition													
Site Preparation (18.11 ac)													
Graders													
Tractors/Loaders/Backhoes	97	0,37	2026	2025Tractors/Loaders/Backhoes120	3,70E+00	2,60E-01	8,00E-03	8,00E-03	6,00E-02	2,48E-01	5,00E-03	4,77E+02	1,54E-01
Rubber Tired Dozers	247	0,4	2026	2025Rubber Tired Dozers250	2,20E+00	2,60E-01	8,00E-03	8,00E-03	6,00E-02	4,43E-01	5,00E-03	4,75E+02	1,53E-01
Scrapers													
Grading (18.11 ac)													
Rubber Tired Dozers	247	0,4	2026	2025Rubber Tired Dozers250	2,20E+00	2,60E-01	8,00E-03	8,00E-03	6,00E-02	4,43E-01	5,00E-03	4,75E+02	1,53E-01
Concrete/Industrial Saws													
Tractors/Loaders/Backhoes	97	0,37	2026	2025Tractors/Loaders/Backhoes120	3,70E+00	2,60E-01	8,00E-03	8,00E-03	6,00E-02	2,48E-01	5,00E-03	4,77E+02	1,54E-01
Graders	187	0,41	2026	2025Graders250	2,20E+00	2,60E-01	8,00E-03	8,00E-03	6,00E-02	2,74E-01	5,00E-03	4,73E+02	1,53E-01
Excavators	158	0,38	2026	2025Excavators175	2,20E+00	2,60E-01	8,00E-03	8,00E-03	6,00E-02	1,88E-01	5,00E-03	4,72E+02	1,53E-01
Scrapers	367	0,48	2026	2025Scrapers500	2,20E+00	2,60E-01	8,00E-03	8,00E-03	6,00E-02	2,57E-01	5,00E-03	4,73E+02	1,53E-01
Building Construction (0 ac)													
Cranes													
Forklifts													
Tractors/Loaders/Backhoes													
Welders													
Generator Sets													
Paving - Asphalt (0 ac)													
Pavers													
Cement and Mortar Mixers													
Rollers													
Tractors/Loaders/Backhoes													
Paving Equipment													
Paving - Concrete (0 ac)													
Pavers													
Cement and Mortar Mixers													
Rollers													
Tractors/Loaders/Backhoes													
Paving Equipment													
Site Preparation - Pond (0 ac)													
Graders													
Tractors/Loaders/Backhoes													
Rubber Tired Dozers													
Scrapers													
Excavation (1835000 cy)													
Scrapers	367	0,48	2026	2025Scrapers500	2,20E+00	2,60E-01	8,00E-03	8,00E-03	6,00E-02	2,57E-01	5,00E-03	4,73E+02	1,53E-01
Rubber Tired Dozers	247	0,4	2026	2025Rubber Tired Dozers250	2,20E+00	2,60E-01	8,00E-03	8,00E-03	6,00E-02	4,43E-01	5,00E-03	4,75E+02	1,53E-01
Off-Highway Trucks	402	0,38	2026	2025Off-Highway Trucks500	2,20E+00	2,60E-01	8,00E-03	8,00E-03	6,00E-02	2,11E-01	5,00E-03	4,75E+02	1,54E-01
Other General Industrial Equipn	88	0,34	2026	2025Other General Industrial Equipment3	3,70E+00	2,60E-01	8,00E-03	8,00E-03	6,00E-02	3,06E-01	5,00E-03	4,70E+02	1,52E-01

WPWMA EIR
Construction Emissions - Proposed Project Exhaust Emissions

Landfill Construction

	Hourly Emissions (lb/hr)									Daily Emissions (lb/day)									Annual Emissions (lb/yr)								
Equipment Type	**TOG**	**ROG**	**CO**	**NOX**	**SO2**	**PM10**	**PM2.5**	**CO2**	**CH4**	**TOG**	**ROG**	**CO**	**NOX**	**SO2**	**PM10**	**PM2.5**	**CO2**	**CH4**	**TOG**	**ROG**	**CO**	**NOX**	**SO2**	**PM10**	**PM2.5**	**CO2**	**CH4**
Demolition																											
Site Preparation (18.11 ac)																											
Graders																											
Tractors/Loaders/Backhoes	0,079	0,019	1,171	0,082	0,002	0,003	0,003	151,028	0,049	0,629	0,152	9,368	0,658	0,013	0,020	0,020	1 208,224	0,390	6,290	1,519	93,683	6,583	0,127	0,203	0,203	12 082,243	3,899
Rubber Tired Dozers	0,289	0,039	1,438	0,170	0,003	0,005	0,005	310,110	0,100	2,314	0,314	11,501	1,359	0,026	0,042	0,042	2 480,882	0,800	23,138	3,137	115,007	13,592	0,261	0,418	0,418	24 808,825	7,998
Scrapers																											
Grading (18.11 ac)																											
Rubber Tired Dozers	0,096	0,013	0,479	0,057	0,001	0,002	0,002	103,370	0,033	0,771	0,105	3,834	0,453	0,009	0,014	0,014	826,961	0,267	23,138	3,137	115,007	13,592	0,261	0,418	0,418	24 808,825	7,998
Concrete/Industrial Saws																											
Tractors/Loaders/Backhoes	0,039	0,009	0,586	0,041	0,001	0,001	0,001	75,514	0,024	0,314	0,076	4,684	0,329	0,006	0,010	0,010	604,112	0,195	9,435	2,279	140,524	9,875	0,190	0,304	0,304	18 123,364	5,849
Graders	0,046	0,010	0,372	0,044	0,001	0,001	0,001	80,030	0,026	0,370	0,081	2,975	0,352	0,007	0,011	0,011	640,240	0,207	11,107	2,434	89,247	10,547	0,203	0,325	0,325	19 207,204	6,207
Excavators	0,050	0,016	0,582	0,069	0,001	0,002	0,002	125,085	0,041	0,398	0,127	4,659	0,551	0,011	0,017	0,017	1 000,677	0,324	11,933	3,812	139,778	16,519	0,318	0,508	0,508	30 020,301	9,721
Scrapers	0,200	0,047	1,709	0,202	0,004	0,006	0,006	367,037	0,119	1,599	0,373	13,671	1,616	0,031	0,050	0,050	2 936,297	0,951	47,970	11,185	410,115	48,468	0,932	1,491	1,491	88 088,898	28,522
Building Construction (0 ac)																											
Cranes																											
Forklifts																											
Tractors/Loaders/Backhoes																											
Welders																											
Generator Sets																											
Paving - Asphalt (0 ac)																											
Pavers																											
Cement and Mortar Mixers																											
Rollers																											
Tractors/Loaders/Backhoes																											
Paving Equipment																											
Paving - Concrete (0 ac)																											
Pavers																											
Cement and Mortar Mixers																											
Rollers																											
Tractors/Loaders/Backhoes																											
Paving Equipment																											
Site Preparation - Pond (0 ac)																											
Graders																											
Tractors/Loaders/Backhoes																											
Rubber Tired Dozers																											
Scrapers																											
Excavation (1835000 cy)																											
Scrapers	0,600	0,140	5,126	0,606	0,012	0,019	0,019	1 101,111	0,357	4,797	1,118	41,012	4,847	0,093	0,149	0,149	8 808,890	2,852	839,476	195,737	7 177,015	848,193	16,311	26,098	26,098	1 541 555,719	499,129
Rubber Tired Dozers	0,289	0,039	1,438	0,170	0,003	0,005	0,005	310,110	0,100	2,314	0,314	11,501	1,359	0,026	0,042	0,042	2 480,882	0,800	404,909	54,890	2 012,628	237,856	4,574	7,319	7,319	434 154,434	139,969
Off-Highway Trucks	0,213	0,061	2,223	0,263	0,005	0,008	0,008	479,879	0,156	1,705	0,485	17,782	2,101	0,040	0,065	0,065	3 839,029	1,245	298,389	84,868	3 111,833	367,762	7,072	11,316	11,316	671 830,102	217,828
Other General Industrial Equipt	0,243	0,047	2,929	0,206	0,004	0,006	0,006	372,028	0,120	0,485	0,095	5,857	0,412	0,008	0,013	0,013	744,055	0,241	84,885	16,623	1 025,055	72,031	1,385	2,216	2,216	130 209,648	42,110

Total per Phase																											
Site Preparation	0,368	0,058	2,609	0,252	0,005	0,008	0,008	461,138	0,149	2,943	0,466	20,869	2,017	0,039	0,062	0,062	3 689,107	1,190	29,427	4,656	208,690	20,175	0,388	0,621	0,621	36 891,068	11,897
Grading	0,432	0,095	3,728	0,413	0,008	0,013	0,013	751,036	0,243	3,453	0,762	29,822	3,300	0,063	0,102	0,102	6 008,286	1,943	103,582	22,846	894,672	99,001	1,904	3,046	3,046	180 248,592	58,296
Building Construction	0,000	0,000	0,000	0,000	0,000	0,000	0,000	0,000	0,000	0,000	0,000	0,000	0,000	0,000	0,000	0,000	0,000	0,000	0,000	0,000	0,000	0,000	0,000	0,000	0,000	0,000	0,000
Paving - Asphalt	0,000	0,000	0,000	0,000	0,000	0,000	0,000	0,000	0,000	0,000	0,000	0,000	0,000	0,000	0,000	0,000	0,000	0,000	0,000	0,000	0,000	0,000	0,000	0,000	0,000	0,000	0,000
Paving - Concrete	0,000	0,000	0,000	0,000	0,000	0,000	0,000	0,000	0,000	0,000	0,000	0,000	0,000	0,000	0,000	0,000	0,000	0,000	0,000	0,000	0,000	0,000	0,000	0,000	0,000	0,000	0,000
Site Preparation - Pond	0,000	0,000	0,000	0,000	0,000	0,000	0,000	0,000	0,000	0,000	0,000	0,000	0,000	0,000	0,000	0,000	0,000	0,000	0,000	0,000	0,000	0,000	0,000	0,000	0,000	0,000	0,000
Excavation	1,345	0,287	11,715	1,244	0,024	0,038	0,038	2 263,128	0,732	9,301	2,012	76,152	8,719	0,168	0,268	0,268	15 872,857	5,137	1 627,659	352,117	13 326,531	1 525,842	29,343	46,949	46,949	2 777 749,904	899,037
Total																			**1 760,668**	**379,619**	**14 429,893**	**1 645,018**	**31,635**	**50,616**	**50,616**	**2 994 889,564**	**969,230**

WPWMA EIR
Construction Emissions - Proposed Project Exhaust Emissions
Plan Concept 2

Landfill Lining & Partial Closure

Construction Period:	01.01.2032	to	
Number of workers:		Duration (weeks):	

Off Road Equipment Type	Area Size	Number (ea)	Daily Hours	Annual Days Equipment Used
Demolition				
Scraper - CAT 657				
Water Truck - 4000 gal, 3 axle, 58000 gvw				
Site Preparation (0 ac)	***0 ac***	***0***	***0***	***0***
Graders	0	0	0	0
Tractors/Loaders/Backhoes	0	0	0	0
Rubber Tired Dozers	0	0	0	0
Scrapers	0	0	0	0
Grading (0 ac)	***0 ac***	***0***	***0***	***0***
Rubber Tired Dozers	0	0	0	0
Concrete/Industrial Saws	0	0	0	0
Tractors/Loaders/Backhoes	0	0	0	0
Graders	0	0	0	0
Excavators	0	0	0	0
Scrapers	0	0	0	0
Building Construction (0 ac)	***0 ac***	***0***	***0***	***0***
Cranes	0	0	0	0
Forklifts	0	0	0	0
Tractors/Loaders/Backhoes	0	0	0	0
Welders	0	0	0	0
Generator Sets	0	0	0	0
Paving - Asphalt (0 ac)	***0 ac***	***0***	***0***	***0***
Pavers	0	0	0	0
Cement and Mortar Mixers	0	0	0	0
Rollers	0	0	0	0
Tractors/Loaders/Backhoes	0	0	0	0
Paving Equipment	0	0	0	0
Paving - Concrete (0 ac)	***0 ac***	***0***	***0***	***0***
Pavers	0	0	0	0
Cement and Mortar Mixers	0	0	0	0
Rollers	0	0	0	0
Tractors/Loaders/Backhoes	0	0	0	0
Paving Equipment	0	0	0	0
Site Preparation - Pond (0 ac)	***0 ac***	***0***	***0***	***0***
Graders	0	0	0	0
Tractors/Loaders/Backhoes	0	0	0	0
Rubber Tired Dozers	0	0	0	0
Scrapers	0	0	0	0
Excavation (131750.25 cy)	***131750 cy***	***4***	***26***	***13***
Scrapers	131750	1	8	13
Rubber Tired Dozers	131750	1	8	13
Off-Highway Trucks	131750	1	8	13
Other General Industrial Equipment	131750	1	2	13
Lining & Partial Closure (18.11 ac)	***18 ac***	***44***	***216***	***175***
Scrapers	18	2	8	175
Scrapers	18	1	8	175
Off-Highway Trucks	18	2	8	175
Rubber Tired Dozers	18	1	8	175
Rubber Tired Dozers	18	1	8	175
Rollers	18	1	4	175
Graders	18	1	8	175
Bore/Drill Rigs	18	1	8	175
Tractors/Loaders/Backhoes	18	2	6	175
Off-Highway Trucks	18	2	8	175
Off-Highway Trucks	18	1	8	175
Excavators	18	1	8	175
Forklifts	18	2	4	175
Other General Industrial Equipment	18	20	2	175
Generator Sets	18	6	8	175

Area Size Reference Table	Size	Unit
Site Preparation	0	ac
Grading	0	ac
Building Construction	0	ac
Paving - Asphalt	0	ac
Paving - Concrete	0	ac
Site Preparation - Pond	0	ac
Excavation	131 750	cy
Lining & Partial Closure	18	ac

WPWMA EIR
Construction Emissions - Proposed Project Exhaust Emissions

Landfill Lining & Partial Closure

Emission Factors					Emissions Factor (g/bhp-hr)								
Equipment Type	**HorsePower**	**Load Factor**	**Construction Year**	**Year+Equipment Type+HorsePower**	**CO**	**NOX**	**PM10**	**PM2.5**	**ROG**	**TOG**	**SO2**	**CO2**	**CH4**
Demolition													
Site Preparation (0 ac)													
Graders													
Tractors/Loaders/Backhoes													
Rubber Tired Dozers													
Scrapers													
Grading (0 ac)													
Rubber Tired Dozers													
Concrete/Industrial Saws													
Tractors/Loaders/Backhoes													
Graders													
Excavators													
Scrapers													
Building Construction (0 ac)													
Cranes													
Forklifts													
Tractors/Loaders/Backhoes													
Welders													
Generator Sets													
Paving - Asphalt (0 ac)													
Pavers													
Cement and Mortar Mixers													
Rollers													
Tractors/Loaders/Backhoes													
Paving Equipment													
Paving - Concrete (0 ac)													
Pavers													
Cement and Mortar Mixers													
Rollers													
Tractors/Loaders/Backhoes													
Paving Equipment													
Site Preparation - Pond (0 ac)													
Graders													
Tractors/Loaders/Backhoes													
Rubber Tired Dozers													
Scrapers													
Excavation (131750.25 cy)													
Scrapers	367	0,48	2032	2030Scrapers500	2,20E+00	2,60E-01	8,00E-03	8,00E-03	6,00E-02	2,70E+00	5,00E-03	5,68E+02	2,30E-02
Rubber Tired Dozers	247	0,4	2032	2030Rubber Tired Dozers250	2,20E+00	2,60E-01	8,00E-03	8,00E-03	6,00E-02	1,56E+00	6,00E-03	5,68E+02	3,00E-02
Off-Highway Trucks	402	0,38	2032	2030Off-Highway Trucks500	2,20E+00	2,60E-01	8,00E-03	8,00E-03	6,00E-02	1,52E+00	5,00E-03	5,68E+02	1,90E-02
Other General Industrial Equipn	88	0,34	2032	2030Other General Industrial Equipment1	3,70E+00	2,60E-01	8,00E-03	8,00E-03	6,00E-02	7,09E+00	6,00E-03	5,68E+02	2,70E-02
Lining & Partial Closure (18.11 ac)													
Scrapers	367	0,48	2032	2030Scrapers500	2,20E+00	2,60E-01	8,00E-03	8,00E-03	6,00E-02	2,70E+00	5,00E-03	5,68E+02	2,30E-02
Scrapers	367	0,48	2032	2030Scrapers500	2,20E+00	2,60E-01	8,00E-03	8,00E-03	6,00E-02	2,70E+00	5,00E-03	5,68E+02	2,30E-02
Off-Highway Trucks	402	0,38	2032	2030Off-Highway Trucks500	2,20E+00	2,60E-01	8,00E-03	8,00E-03	6,00E-02	1,52E+00	5,00E-03	5,68E+02	1,90E-02
Rubber Tired Dozers	247	0,4	2032	2030Rubber Tired Dozers250	2,20E+00	2,60E-01	8,00E-03	8,00E-03	6,00E-02	1,56E+00	6,00E-03	5,68E+02	3,00E-02
Rubber Tired Dozers	247	0,4	2032	2030Rubber Tired Dozers250	2,20E+00	2,60E-01	8,00E-03	8,00E-03	6,00E-02	1,56E+00	6,00E-03	5,68E+02	3,00E-02
Rollers	80	0,38	2032	2030Rollers120	3,70E+00	2,60E-01	8,00E-03	8,00E-03	6,00E-02	6,53E+00	6,00E-03	5,68E+02	2,70E-02
Graders	187	0,41	2032	2030Graders250	2,20E+00	2,60E-01	8,00E-03	8,00E-03	6,00E-02	3,11E+00	6,00E-03	5,68E+02	1,90E-02
Bore/Drill Rigs	221	0,5	2032	2030Bore/Drill Rigs250	2,20E+00	2,60E-01	8,00E-03	8,00E-03	6,00E-02	6,36E+00	6,00E-03	5,68E+02	1,10E-02
Tractors/Loaders/Backhoes	97	0,37	2032	2030Tractors/Loaders/Backhoes120	3,70E+00	2,60E-01	8,00E-03	8,00E-03	6,00E-02	2,29E+00	6,00E-03	5,68E+02	2,40E-02
Off-Highway Trucks	402	0,38	2032	2030Off-Highway Trucks500	2,20E+00	2,60E-01	8,00E-03	8,00E-03	6,00E-02	1,52E+00	5,00E-03	5,68E+02	1,90E-02
Off-Highway Trucks	402	0,38	2032	2030Off-Highway Trucks500	2,20E+00	2,60E-01	8,00E-03	8,00E-03	6,00E-02	1,52E+00	5,00E-03	5,68E+02	1,90E-02
Excavators	158	0,38	2032	2030Excavators175	2,20E+00	2,60E-01	8,00E-03	8,00E-03	6,00E-02	3,91E+00	6,00E-03	5,68E+02	1,90E-02
Forklifts	89	0,2	2032	2030Forklifts120	3,70E+00	2,60E-01	8,00E-03	8,00E-03	6,00E-02	1,48E+00	6,00E-03	5,68E+02	2,50E-02
Other General Industrial Equipn	88	0,34	2032	2030Other General Industrial Equipment1	3,70E+00	2,60E-01	8,00E-03	8,00E-03	6,00E-02	7,09E+00	6,00E-03	5,68E+02	2,70E-02
Generator Sets	84	0,74	2032	2030Generator Sets120	3,70E+00	2,60E-01	8,00E-03	8,00E-03	6,00E-02	3,62E+00	6,00E-03	5,68E+02	1,60E-02

WPWMA EIR
Construction Emissions - Proposed Project Exhaust Emissions

Landfill Lining & Partial Closure

	Hourly Emissions (lb/hr)									Daily Emissions (lb/day)									Annual Emissions (lb/yr)								
Equipment Type	**TOG**	**ROG**	**CO**	**NOX**	**SO2**	**PM10**	**PM2.5**	**CO2**	**CH4**	**TOG**	**ROG**	**CO**	**NOX**	**SO2**	**PM10**	**PM2.5**	**CO2**	**CH4**	**TOG**	**ROG**	**CO**	**NOX**	**SO2**	**PM10**	**PM2.5**	**CO2**	**CH4**
Demolition																											
Site Preparation (0 ac)																											
Graders																											
Tractors/Loaders/Backhoes																											
Rubber Tired Dozers																											
Scrapers																											
Grading (0 ac)																											
Rubber Tired Dozers																											
Concrete/Industrial Saws																											
Tractors/Loaders/Backhoes																											
Graders																											
Excavators																											
Scrapers																											
Building Construction (0 ac)																											
Cranes																											
Forklifts																											
Tractors/Loaders/Backhoes																											
Welders																											
Generator Sets																											
Paving - Asphalt (0 ac)																											
Pavers																											
Cement and Mortar Mixers																											
Rollers																											
Tractors/Loaders/Backhoes																											
Paving Equipment																											
Paving - Concrete (0 ac)																											
Pavers																											
Cement and Mortar Mixers																											
Rollers																											
Tractors/Loaders/Backhoes																											
Paving Equipment																											
Site Preparation - Pond (0 ac)																											
Graders																											
Tractors/Loaders/Backhoes																											
Rubber Tired Dozers																											
Scrapers																											
Excavation (131750.25 cy)																											
Scrapers	1,047	0,023	0,854	0,101	0,002	0,003	0,003	220,708	0,009	8,379	0,186	6,835	0,808	0,016	0,025	0,025	1 765,667	0,071	108,932	2,423	88,858	10,501	0,202	0,323	0,323	22 953,671	0,929
Rubber Tired Dozers	0,339	0,013	0,479	0,057	0,001	0,002	0,002	123,785	0,007	2,711	0,105	3,834	0,453	0,010	0,014	0,014	990,281	0,052	35,248	1,359	49,837	5,890	0,136	0,181	0,181	12 873,653	0,680
Off-Highway Trucks	0,512	0,020	0,741	0,088	0,002	0,003	0,003	191,391	0,006	4,095	0,162	5,927	0,700	0,013	0,022	0,022	1 531,127	0,051	53,238	2,101	77,055	9,106	0,175	0,280	0,280	19 904,648	0,665
Other General Industrial Equip	0,468	0,004	0,244	0,017	0,000	0,001	0,001	37,486	0,002	0,935	0,008	0,488	0,034	0,001	0,001	0,001	74,973	0,004	12,161	0,103	6,346	0,446	0,010	0,014	0,014	974,645	0,046
Lining & Partial Closure (18.11 ac)																											
Scrapers	2,095	0,047	1,709	0,202	0,004	0,006	0,006	441,417	0,018	16,759	0,373	13,671	1,616	0,031	0,050	0,050	3 531,334	0,143	2 932,790	65,246	2 392,338	282,731	5,437	8,699	8,699	617 983,441	25,011
Scrapers	1,047	0,023	0,854	0,101	0,002	0,003	0,003	220,708	0,009	8,379	0,186	6,835	0,808	0,016	0,025	0,025	1 765,667	0,071	1 466,395	32,623	1 196,169	141,365	2,719	4,350	4,350	308 991,721	12,505
Off-Highway Trucks	1,024	0,040	1,482	0,175	0,003	0,005	0,005	382,782	0,013	8,190	0,323	11,855	1,401	0,027	0,043	0,043	3 062,253	0,102	1 433,329	56,579	2 074,555	245,175	4,715	7,544	7,544	535 894,360	17,917
Rubber Tired Dozers	0,339	0,013	0,479	0,057	0,001	0,002	0,002	123,785	0,007	2,711	0,105	3,834	0,453	0,010	0,014	0,014	990,281	0,052	474,492	18,297	670,876	79,285	1,830	2,440	2,440	173 299,171	9,148
Rubber Tired Dozers	0,339	0,013	0,479	0,057	0,001	0,002	0,002	123,785	0,007	2,711	0,105	3,834	0,453	0,010	0,014	0,014	990,281	0,052	474,492	18,297	670,876	79,285	1,830	2,440	2,440	173 299,171	9,148
Rollers	0,438	0,004	0,248	0,017	0,000	0,001	0,001	38,088	0,002	1,750	0,016	0,992	0,070	0,002	0,002	0,002	152,351	0,007	306,257	2,815	173,583	12,198	0,281	0,375	0,375	26 661,411	1,267
Graders	0,526	0,010	0,372	0,044	0,001	0,001	0,001	96,059	0,003	4,211	0,081	2,975	0,352	0,008	0,011	0,011	768,470	0,026	736,897	14,198	520,608	61,526	1,420	1,893	1,893	134 482,262	4,496
Bore/Drill Rigs	1,550	0,015	0,536	0,063	0,001	0,002	0,002	138,444	0,003	12,401	0,117	4,288	0,507	0,012	0,016	0,016	1 107,551	0,021	2 170,135	20,463	750,322	88,674	2,046	2,728	2,728	193 821,442	3,752
Tractors/Loaders/Backhoes	0,362	0,009	0,586	0,041	0,001	0,001	0,001	89,932	0,004	2,170	0,057	3,513	0,247	0,006	0,008	0,008	539,593	0,023	379,676	9,970	614,793	43,202	0,997	1,329	1,329	94 428,754	3,988
Off-Highway Trucks	1,024	0,040	1,482	0,175	0,003	0,005	0,005	382,782	0,013	8,190	0,323	11,855	1,401	0,027	0,043	0,043	3 062,253	0,102	1 433,329	56,579	2 074,555	245,175	4,715	7,544	7,544	535 894,360	17,917
Off-Highway Trucks	0,512	0,020	0,741	0,088	0,002	0,003	0,003	191,391	0,006	4,095	0,162	5,927	0,700	0,013	0,022	0,022	1 531,127	0,051	716,664	28,289	1 037,278	122,587	2,357	3,772	3,772	267 947,180	8,958
Excavators	0,518	0,008	0,291	0,034	0,001	0,001	0,001	75,223	0,003	4,145	0,064	2,330	0,275	0,006	0,008	0,008	601,786	0,020	725,311	11,119	407,686	48,181	1,112	1,482	1,482	105 312,573	3,521
Forklifts	0,116	0,005	0,290	0,020	0,000	0,001	0,001	44,603	0,002	0,465	0,019	1,162	0,082	0,002	0,003	0,003	178,411	0,008	81,310	3,296	203,275	14,284	0,330	0,440	0,440	31 221,915	1,373
Other General Industrial Equip	9,355	0,079	4,881	0,343	0,008	0,011	0,011	749,727	0,036	18,710	0,158	9,762	0,686	0,016	0,021	0,021	1 499,454	0,071	3 274,174	27,704	1 708,425	120,052	2,770	3,694	3,694	262 404,413	12,467
Generator Sets	2,973	0,049	3,042	0,214	0,005	0,007	0,007	467,276	0,013	23,786	0,395	24,338	1,710	0,039	0,053	0,053	3 738,210	0,105	4 162,491	69,068	4 259,186	299,294	6,907	9,209	9,209	654 186,831	18,418

Total per Phase																											
Site Preparation	0,000	0,000	0,000	0,000	0,000	0,000	0,000	0,000	0,000	0,000	0,000	0,000	0,000	0,000	0,000	0,000	0,000	0,000	0,000	0,000	0,000	0,000	0,000	0,000	0,000	0,000	0,000
Grading	0,000	0,000	0,000	0,000	0,000	0,000	0,000	0,000	0,000	0,000	0,000	0,000	0,000	0,000	0,000	0,000	0,000	0,000	0,000	0,000	0,000	0,000	0,000	0,000	0,000	0,000	0,000
Building Construction	0,000	0,000	0,000	0,000	0,000	0,000	0,000	0,000	0,000	0,000	0,000	0,000	0,000	0,000	0,000	0,000	0,000	0,000	0,000	0,000	0,000	0,000	0,000	0,000	0,000	0,000	0,000
Paving - Asphalt	0,000	0,000	0,000	0,000	0,000	0,000	0,000	0,000	0,000	0,000	0,000	0,000	0,000	0,000	0,000	0,000	0,000	0,000	0,000	0,000	0,000	0,000	0,000	0,000	0,000	0,000	0,000
Paving - Concrete	0,000	0,000	0,000	0,000	0,000	0,000	0,000	0,000	0,000	0,000	0,000	0,000	0,000	0,000	0,000	0,000	0,000	0,000	0,000	0,000	0,000	0,000	0,000	0,000	0,000	0,000	0,000
Site Preparation - Pond	0,000	0,000	0,000	0,000	0,000	0,000	0,000	0,000	0,000	0,000	0,000	0,000	0,000	0,000	0,000	0,000	0,000	0,000	0,000	0,000	0,000	0,000	0,000	0,000	0,000	0,000	0,000
Excavation	2,366	0,061	2,319	0,262	0,005	0,008	0,008	573,371	0,024	16,121	0,461	17,084	1,996	0,040	0,061	0,061	4 362,047	0,178	209,579	5,987	222,095	25,944	0,523	0,798	0,798	56 706,616	2,320
Lining & Partial Closure	22,217	0,376	17,473	1,631	0,035	0,050	0,050	3 566,001	0,137	118,673	2,483	107,169	10,760	0,226	0,331	0,331	23 519,023	0,856	20 767,743	434,542	18 754,527	1 883,015	39,466	57,939	57,939	4 115 829,006	149,886
Total																			**20 977,323**	**440,529**	**18 976,622**	**1 908,959**	**39,989**	**58,737**	**58,737**	**4 172 536**	**152,206**

WPWMA EIR
Construction Emissions - Proposed Project Exhaust Emissions
Plan Concept 2

Admin Building

Construction Period:	01.01.2032	to	
Number of workers:		Duration (weeks):	

Off Road Equipment Type	Area Size	Number (ea)	Daily Hours	Annual Days Equipment Used
Demolition				
Scraper - CAT 657				
Water Truck - 4000 gal, 3 axle, 58000 gvw				
Site Preparation (1 ac)	***1 ac***	***2***	***16***	***2***
Graders	1	1	8	2
Tractors/Loaders/Backhoes	1	1	8	2
Rubber Tired Dozers	1	0	0	0
Scrapers	1	0	0	0
Grading (1 ac)	***1 ac***	***4***	***21***	***4***
Rubber Tired Dozers	1	1	1	4
Concrete/Industrial Saws	1	1	8	4
Tractors/Loaders/Backhoes	1	2	6	4
Graders	1	0	0	0
Excavators	1	0	0	0
Scrapers	1	0	0	0
Building Construction (1 ac)	***1 ac***	***5***	***32***	***200***
Cranes	1	1	4	200
Forklifts	1	2	6	200
Tractors/Loaders/Backhoes	1	2	8	200
Welders	1	0	0	0
Generator Sets	1	0	0	0
Paving - Asphalt (1 ac)	***1 ac***	***7***	***45***	***10***
Pavers	1	1	7	10
Cement and Mortar Mixers	1	4	6	10
Rollers	1	1	7	10
Tractors/Loaders/Backhoes	1	1	7	10
Paving Equipment	1	0	0	0
Paving - Concrete (1 ac)	***1 ac***	***7***	***45***	***10***
Pavers	1	1	7	10
Cement and Mortar Mixers	1	4	6	10
Rollers	1	1	7	10
Tractors/Loaders/Backhoes	1	1	7	10
Paving Equipment	1	0	0	0
Site Preparation - Pond (0 ac)	***0 ac***	***0***	***0***	***0***
Graders	0	0	0	0
Tractors/Loaders/Backhoes	0	0	0	0
Rubber Tired Dozers	0	0	0	0
Scrapers	0	0	0	0
Excavation (0 cy)	***0 cy***	***0***	***0***	***0***
Scrapers	0	0	0	0
Rubber Tired Dozers	0	0	0	0
Off-Highway Trucks	0	0	0	0
Other General Industrial Equipment	0	0	0	0

Area Size Reference Table	Size	Unit
Site Preparation	1	ac
Grading	1	ac
Building Construction	1	ac
Paving - Asphalt	1	ac
Paving - Concrete	1	ac
Site Preparation - Pond	0	ac
Excavation	0	cy

WPWMA EIR
Construction Emissions - Proposed Project Exhaust Emissions

Admin Building

Emission Factors					Emissions Factor (g/bhp-hr)								
Equipment Type	**HorsePower**	**Load Factor**	**Construction Year**	**Year+Equipment Type+HorsePower**	**CO**	**NOX**	**PM10**	**PM2.5**	**ROG**	**TOG**	**SO2**	**CO2**	**CH4**
Demolition													
Site Preparation (1 ac)													
Graders	187	0,41	2032	2030Graders250	2,20E+00	2,60E-01	8,00E-03	8,00E-03	6,00E-02	3,11E+00	6,00E-03	5,68E+02	1,90E-02
Tractors/Loaders/Backhoes	97	0,37	2032	2030Tractors/Loaders/Backhoes120	3,70E+00	2,60E-01	8,00E-03	8,00E-03	6,00E-02	2,29E+00	6,00E-03	5,68E+02	2,40E-02
Rubber Tired Dozers													
Scrapers													
Grading (1 ac)													
Rubber Tired Dozers	247	0,4	2032	2030Rubber Tired Dozers250	2,20E+00	2,60E-01	8,00E-03	8,00E-03	6,00E-02	1,56E+00	6,00E-03	5,68E+02	3,00E-02
Concrete/Industrial Saws	81	0,73	2032	2030Concrete/Industrial Saws120	3,70E+00	2,60E-01	8,00E-03	8,00E-03	6,00E-02	2,23E+00	6,00E-03	5,68E+02	1,90E-02
Tractors/Loaders/Backhoes	97	0,37	2032	2030Tractors/Loaders/Backhoes120	3,70E+00	2,60E-01	8,00E-03	8,00E-03	6,00E-02	2,29E+00	6,00E-03	5,68E+02	2,40E-02
Graders													
Excavators													
Scrapers													
Building Construction (1 ac)													
Cranes	231	0,29	2032	2030Cranes250	2,20E+00	2,60E-01	8,00E-03	8,00E-03	6,00E-02	2,84E+00	6,00E-03	5,68E+02	2,00E-02
Forklifts	89	0,2	2032	2030Forklifts120	3,70E+00	2,60E-01	8,00E-03	8,00E-03	6,00E-02	1,48E+00	6,00E-03	5,68E+02	2,50E-02
Tractors/Loaders/Backhoes	97	0,37	2032	2030Tractors/Loaders/Backhoes120	3,70E+00	2,60E-01	8,00E-03	8,00E-03	6,00E-02	2,29E+00	6,00E-03	5,68E+02	2,40E-02
Welders													
Generator Sets													
Paving - Asphalt (1 ac)													
Pavers	130	0,42	2032	2030Pavers175	2,20E+00	2,60E-01	8,00E-03	8,00E-03	6,00E-02	5,58E+00	6,00E-03	5,68E+02	2,70E-02
Cement and Mortar Mixers	9	0,56	2032	2030Cement and Mortar Mixers15	4,10E+00	2,75E+00	8,00E-03	8,00E-03	1,20E-01	1,08E+00	8,00E-03	5,68E+02	5,90E-02
Rollers	80	0,38	2032	2030Rollers120	3,70E+00	2,60E-01	8,00E-03	8,00E-03	6,00E-02	6,53E+00	6,00E-03	5,68E+02	2,70E-02
Tractors/Loaders/Backhoes	97	0,37	2032	2030Tractors/Loaders/Backhoes120	3,70E+00	2,60E-01	8,00E-03	8,00E-03	6,00E-02	2,29E+00	6,00E-03	5,68E+02	2,40E-02
Paving Equipment													
Paving - Concrete (1 ac)													
Pavers	130	0,42	2032	2030Pavers175	2,20E+00	2,60E-01	8,00E-03	8,00E-03	6,00E-02	5,58E+00	6,00E-03	5,68E+02	2,70E-02
Cement and Mortar Mixers	9	0,56	2032	2030Cement and Mortar Mixers15	4,10E+00	2,75E+00	8,00E-03	8,00E-03	1,20E-01	1,08E+00	8,00E-03	5,68E+02	5,90E-02
Rollers	80	0,38	2032	2030Rollers120	3,70E+00	2,60E-01	8,00E-03	8,00E-03	6,00E-02	6,53E+00	6,00E-03	5,68E+02	2,70E-02
Tractors/Loaders/Backhoes	97	0,37	2032	2030Tractors/Loaders/Backhoes120	3,70E+00	2,60E-01	8,00E-03	8,00E-03	6,00E-02	2,29E+00	6,00E-03	5,68E+02	2,40E-02
Paving Equipment													
Site Preparation - Pond (0 ac)													
Graders													
Tractors/Loaders/Backhoes													
Rubber Tired Dozers													
Scrapers													
Excavation (0 cy)													
Scrapers													
Rubber Tired Dozers													
Off-Highway Trucks													
Other General Industrial Equipr													

WPWMA EIR
Construction Emissions - Proposed Project Exhaust Emissions

Admin Building

	Hourly Emissions (lb/hr)									Daily Emissions (lb/day)									Annual Emissions (lb/yr)								
Equipment Type	**TOG**	**ROG**	**CO**	**NOX**	**SO2**	**PM10**	**PM2.5**	**CO2**	**CH4**	**TOG**	**ROG**	**CO**	**NOX**	**SO2**	**PM10**	**PM2.5**	**CO2**	**CH4**	**TOG**	**ROG**	**CO**	**NOX**	**SO2**	**PM10**	**PM2.5**	**CO2**	**CH4**
Demolition																											
Site Preparation (1 ac)																											
Graders	0,526	0,010	0,372	0,044	0,001	0,001	0,001	96,059	0,003	4,211	0,081	2,975	0,352	0,008	0,011	0,011	768,470	0,026	8,422	0,162	5,950	0,703	0,016	0,022	0,022	1 536,940	0,051
Tractors/Loaders/Backhoes	0,181	0,005	0,293	0,021	0,000	0,001	0,001	44,966	0,002	1,446	0,038	2,342	0,165	0,004	0,005	0,005	359,729	0,015	2,893	0,076	4,684	0,329	0,008	0,010	0,010	719,457	0,030
Rubber Tired Dozers																											
Scrapers																											
Grading (1 ac)																											
Rubber Tired Dozers	0,339	0,013	0,479	0,057	0,001	0,002	0,002	123,785	0,007	0,339	0,013	0,479	0,057	0,001	0,002	0,002	123,785	0,007	1,356	0,052	1,917	0,227	0,005	0,007	0,007	495,140	0,026
Concrete/Industrial Saws	0,290	0,008	0,482	0,034	0,001	0,001	0,001	74,083	0,002	2,321	0,063	3,859	0,271	0,006	0,008	0,008	592,665	0,020	9,286	0,250	15,435	1,085	0,025	0,033	0,033	2 370,660	0,079
Tractors/Loaders/Backhoes	0,362	0,009	0,586	0,041	0,001	0,001	0,001	89,932	0,004	2,170	0,057	3,513	0,247	0,006	0,008	0,008	539,593	0,023	8,678	0,228	14,052	0,987	0,023	0,030	0,030	2 158,372	0,091
Graders																											
Excavators																											
Scrapers																											
Building Construction (1 ac)																											
Cranes	0,419	0,009	0,325	0,038	0,001	0,001	0,001	83,931	0,003	1,675	0,035	1,300	0,154	0,004	0,005	0,005	335,723	0,012	334,956	7,089	259,931	30,719	0,709	0,945	0,945	67 144,659	2,363
Forklifts	0,116	0,005	0,290	0,020	0,000	0,001	0,001	44,603	0,002	0,697	0,028	1,742	0,122	0,003	0,004	0,004	267,616	0,012	139,389	5,651	348,472	24,487	0,565	0,753	0,753	53 523,284	2,355
Tractors/Loaders/Backhoes	0,362	0,009	0,586	0,041	0,001	0,001	0,001	89,932	0,004	2,893	0,076	4,684	0,329	0,008	0,010	0,010	719,457	0,030	578,554	15,192	936,828	65,831	1,519	2,026	2,026	143 891,434	6,077
Welders																											
Generator Sets																											
Paving - Asphalt (1 ac)																											
Pavers	0,671	0,007	0,265	0,031	0,001	0,001	0,001	68,408	0,003	4,699	0,051	1,854	0,219	0,005	0,007	0,007	478,853	0,023	46,992	0,506	18,537	2,191	0,051	0,067	0,067	4 788,530	0,228
Cement and Mortar Mixers	0,048	0,005	0,182	0,122	0,000	0,000	0,000	25,258	0,003	0,287	0,032	1,093	0,733	0,002	0,002	0,002	151,549	0,016	2,867	0,320	10,934	7,333	0,021	0,021	0,021	1 515,491	0,157
Rollers	0,438	0,004	0,248	0,017	0,000	0,001	0,001	38,088	0,002	3,063	0,028	1,736	0,122	0,003	0,004	0,004	266,614	0,013	30,626	0,281	17,358	1,220	0,028	0,038	0,038	2 666,141	0,127
Tractors/Loaders/Backhoes	0,181	0,005	0,293	0,021	0,000	0,001	0,001	44,966	0,002	1,266	0,033	2,049	0,144	0,003	0,004	0,004	314,763	0,013	12,656	0,332	20,493	1,440	0,033	0,044	0,044	3 147,625	0,133
Paving Equipment																											
Paving - Concrete (1 ac)																											
Pavers	0,671	0,007	0,265	0,031	0,001	0,001	0,001	68,408	0,003	4,699	0,051	1,854	0,219	0,005	0,007	0,007	478,853	0,023	46,992	0,506	18,537	2,191	0,051	0,067	0,067	4 788,530	0,228
Cement and Mortar Mixers	0,048	0,005	0,182	0,122	0,000	0,000	0,000	25,258	0,003	0,287	0,032	1,093	0,733	0,002	0,002	0,002	151,549	0,016	2,867	0,320	10,934	7,333	0,021	0,021	0,021	1 515,491	0,157
Rollers	0,438	0,004	0,248	0,017	0,000	0,001	0,001	38,088	0,002	3,063	0,028	1,736	0,122	0,003	0,004	0,004	266,614	0,013	30,626	0,281	17,358	1,220	0,028	0,038	0,038	2 666,141	0,127
Tractors/Loaders/Backhoes	0,181	0,005	0,293	0,021	0,000	0,001	0,001	44,966	0,002	1,266	0,033	2,049	0,144	0,003	0,004	0,004	314,763	0,013	12,656	0,332	20,493	1,440	0,033	0,044	0,044	3 147,625	0,133
Paving Equipment																											
Site Preparation - Pond (0 ac)																											
Graders																											
Tractors/Loaders/Backhoes																											
Rubber Tired Dozers																											
Scrapers																											
Excavation (0 cy)																											
Scrapers																											
Rubber Tired Dozers																											
Off-Highway Trucks																											
Other General Industrial Equipt																											

Total per Phase																											
Site Preparation	0,707	0,015	0,665	0,065	0,001	0,002	0,002	141,025	0,005	5,657	0,119	5,317	0,516	0,012	0,016	0,016	1 128,199	0,041	11,314	0,238	10,634	1,032	0,024	0,032	0,032	2 256,397	0,082
Grading	0,991	0,030	1,547	0,132	0,003	0,004	0,004	287,800	0,013	4,830	0,133	7,851	0,575	0,013	0,018	0,018	1 256,043	0,049	19,320	0,530	31,404	2,299	0,053	0,071	0,071	5 024,173	0,197
Building Construction	0,896	0,023	1,201	0,100	0,002	0,003	0,003	218,466	0,009	5,264	0,140	7,726	0,605	0,014	0,019	0,019	1 322,797	0,054	1 052,899	27,932	1 545,230	121,037	2,793	3,724	3,724	264 559,377	10,794
Paving - Asphalt	1,337	0,021	0,988	0,192	0,002	0,002	0,002	176,720	0,010	9,314	0,144	6,732	1,218	0,013	0,017	0,017	1 211,779	0,064	93,141	1,439	67,322	12,184	0,133	0,171	0,171	12 117,787	0,644
Paving - Concrete	1,337	0,021	0,988	0,192	0,002	0,002	0,002	176,720	0,010	9,314	0,144	6,732	1,218	0,013	0,017	0,017	1 211,779	0,064	93,141	1,439	67,322	12,184	0,133	0,171	0,171	12 117,787	0,644
Site Preparation - Pond	0,000	0,000	0,000	0,000	0,000	0,000	0,000	0,000	0,000	0,000	0,000	0,000	0,000	0,000	0,000	0,000	0,000	0,000	0,000	0,000	0,000	0,000	0,000	0,000	0,000	0,000	0,000
Excavation	0,000	0,000	0,000	0,000	0,000	0,000	0,000	0,000	0,000	0,000	0,000	0,000	0,000	0,000	0,000	0,000	0,000	0,000	0,000	0,000	0,000	0,000	0,000	0,000	0,000	0,000	0,000
Total																			**1 269,814**	**31,579**	**1 721,912**	**148,736**	**3,137**	**4,168**	**4,168**	**296 075,520**	**12,361**

WPWMA EIR
Construction Emissions - Proposed Project Exhaust Emissions
Plan Concept 2

Recovered Materials Storage

Construction Period:	01.01.2032	to	
Number of workers:		Duration (weeks):	

Off Road Equipment Type	Area Size	Number (ea)	Daily Hours	Annual Days Equipment Used
Demolition				
Scraper - CAT 657				
Water Truck - 4000 gal, 3 axle, 58000 gvw				
Site Preparation (2 ac)	***2 ac***	***3***	***23***	***3***
Graders	2	1	8	3
Tractors/Loaders/Backhoes	2	1	8	3
Rubber Tired Dozers	2	1	7	3
Scrapers	2	0	0	0
Grading (2 ac)	***2 ac***	***3***	***19***	***6***
Rubber Tired Dozers	2	1	6	6
Concrete/Industrial Saws	2	0	0	0
Tractors/Loaders/Backhoes	2	1	7	6
Graders	2	1	6	6
Excavators	2	0	0	0
Scrapers	2	0	0	0
Building Construction (2 ac)	***2 ac***	***7***	***50***	***220***
Cranes	2	1	6	220
Forklifts	2	1	6	220
Tractors/Loaders/Backhoes	2	1	6	220
Welders	2	3	8	220
Generator Sets	2	1	8	220
Paving - Asphalt (1 ac)	***1 ac***	***7***	***45***	***10***
Pavers	1	1	7	10
Cement and Mortar Mixers	1	4	6	10
Rollers	1	1	7	10
Tractors/Loaders/Backhoes	1	1	7	10
Paving Equipment	1	0	0	0
Paving - Concrete (2 ac)	***2 ac***	***5***	***35***	***10***
Pavers	2	1	6	10
Cement and Mortar Mixers	2	1	6	10
Rollers	2	1	7	10
Tractors/Loaders/Backhoes	2	1	8	10
Paving Equipment	2	1	8	10
Site Preparation - Pond (0 ac)	***0 ac***	***0***	***0***	***0***
Graders	0	0	0	0
Tractors/Loaders/Backhoes	0	0	0	0
Rubber Tired Dozers	0	0	0	0
Scrapers	0	0	0	0
Excavation (0 cy)	***0 cy***	***0***	***0***	***0***
Scrapers	0	0	0	0
Rubber Tired Dozers	0	0	0	0
Off-Highway Trucks	0	0	0	0
Other General Industrial Equipment	0	0	0	0

Area Size Reference Table	Size	Unit
Site Preparation	2	ac
Grading	2	ac
Building Construction	2	ac
Paving - Asphalt	1	ac
Paving - Concrete	2	ac
Site Preparation - Pond	0	ac
Excavation	0	cy

WPWMA EIR
Construction Emissions - Proposed Project Exhaust Emissions

Recovered Materials Storage

Emission Factors					Emissions Factor (g/bhp-hr)								
Equipment Type	**HorsePower**	**Load Factor**	**Construction Year**	**Year+Equipment Type+HorsePower**	**CO**	**NOX**	**PM10**	**PM2.5**	**ROG**	**TOG**	**SO2**	**CO2**	**CH4**
Demolition													
Site Preparation (2 ac)													
Graders	187	0,41	2032	2030Graders250	2,20E+00	2,60E-01	8,00E-03	8,00E-03	6,00E-02	3,11E+00	6,00E-03	5,68E+02	1,90E-02
Tractors/Loaders/Backhoes	97	0,37	2032	2030Tractors/Loaders/Backhoes120	3,70E+00	2,60E-01	8,00E-03	8,00E-03	6,00E-02	2,29E+00	6,00E-03	5,68E+02	2,40E-02
Rubber Tired Dozers	247	0,4	2032	2030Rubber Tired Dozers250	2,20E+00	2,60E-01	8,00E-03	8,00E-03	6,00E-02	1,56E+00	6,00E-03	5,68E+02	3,00E-02
Scrapers													
Grading (2 ac)													
Rubber Tired Dozers	247	0,4	2032	2030Rubber Tired Dozers250	2,20E+00	2,60E-01	8,00E-03	8,00E-03	6,00E-02	1,56E+00	6,00E-03	5,68E+02	3,00E-02
Concrete/Industrial Saws													
Tractors/Loaders/Backhoes	97	0,37	2032	2030Tractors/Loaders/Backhoes120	3,70E+00	2,60E-01	8,00E-03	8,00E-03	6,00E-02	2,29E+00	6,00E-03	5,68E+02	2,40E-02
Graders	187	0,41	2032	2030Graders250	2,20E+00	2,60E-01	8,00E-03	8,00E-03	6,00E-02	3,11E+00	6,00E-03	5,68E+02	1,90E-02
Excavators													
Scrapers													
Building Construction (2 ac)													
Cranes	231	0,29	2032	2030Cranes250	2,20E+00	2,60E-01	8,00E-03	8,00E-03	6,00E-02	2,84E+00	6,00E-03	5,68E+02	2,00E-02
Forklifts	89	0,2	2032	2030Forklifts120	3,70E+00	2,60E-01	8,00E-03	8,00E-03	6,00E-02	1,48E+00	6,00E-03	5,68E+02	2,50E-02
Tractors/Loaders/Backhoes	97	0,37	2032	2030Tractors/Loaders/Backhoes120	3,70E+00	2,60E-01	8,00E-03	8,00E-03	6,00E-02	2,29E+00	6,00E-03	5,68E+02	2,40E-02
Welders	46	0,45	2032	2030Welders50	4,10E+00	2,75E+00	8,00E-03	8,00E-03	1,20E-01	4,72E+00	7,00E-03	5,68E+02	4,00E-02
Generator Sets	84	0,74	2032	2030Generator Sets120	3,70E+00	2,60E-01	8,00E-03	8,00E-03	6,00E-02	3,62E+00	6,00E-03	5,68E+02	1,60E-02
Paving - Asphalt (1 ac)													
Pavers	130	0,42	2032	2030Pavers175	2,20E+00	2,60E-01	8,00E-03	8,00E-03	6,00E-02	5,58E+00	6,00E-03	5,68E+02	2,70E-02
Cement and Mortar Mixers	9	0,56	2032	2030Cement and Mortar Mixers15	4,10E+00	2,75E+00	8,00E-03	8,00E-03	1,20E-01	1,08E+00	8,00E-03	5,68E+02	5,90E-02
Rollers	80	0,38	2032	2030Rollers120	3,70E+00	2,60E-01	8,00E-03	8,00E-03	6,00E-02	6,53E+00	6,00E-03	5,68E+02	2,70E-02
Tractors/Loaders/Backhoes	97	0,37	2032	2030Tractors/Loaders/Backhoes120	3,70E+00	2,60E-01	8,00E-03	8,00E-03	6,00E-02	2,29E+00	6,00E-03	5,68E+02	2,40E-02
Paving Equipment													
Paving - Concrete (2 ac)													
Pavers	130	0,42	2032	2030Pavers175	2,20E+00	2,60E-01	8,00E-03	8,00E-03	6,00E-02	5,58E+00	6,00E-03	5,68E+02	2,70E-02
Cement and Mortar Mixers	9	0,56	2032	2030Cement and Mortar Mixers15	4,10E+00	2,75E+00	8,00E-03	8,00E-03	1,20E-01	1,08E+00	8,00E-03	5,68E+02	5,90E-02
Rollers	80	0,38	2032	2030Rollers120	3,70E+00	2,60E-01	8,00E-03	8,00E-03	6,00E-02	6,53E+00	6,00E-03	5,68E+02	2,70E-02
Tractors/Loaders/Backhoes	97	0,37	2032	2030Tractors/Loaders/Backhoes120	3,70E+00	2,60E-01	8,00E-03	8,00E-03	6,00E-02	2,29E+00	6,00E-03	5,68E+02	2,40E-02
Paving Equipment	132	0,36	2032	2030Paving Equipment175	2,20E+00	2,60E-01	8,00E-03	8,00E-03	6,00E-02	5,53E+00	6,00E-03	5,68E+02	2,60E-02
Site Preparation - Pond (0 ac)													
Graders													
Tractors/Loaders/Backhoes													
Rubber Tired Dozers													
Scrapers													
Excavation (0 cy)													
Scrapers													
Rubber Tired Dozers													
Off-Highway Trucks													
Other General Industrial Equipn													

WPWMA EIR
Construction Emissions - Proposed Project Exhaust Emissions

Recovered Materials Storage

	Hourly Emissions (lb/hr)									Daily Emissions (lb/day)									Annual Emissions (lb/yr)								
Equipment Type	**TOG**	**ROG**	**CO**	**NOX**	**SO2**	**PM10**	**PM2.5**	**CO2**	**CH4**	**TOG**	**ROG**	**CO**	**NOX**	**SO2**	**PM10**	**PM2.5**	**CO2**	**CH4**	**TOG**	**ROG**	**CO**	**NOX**	**SO2**	**PM10**	**PM2.5**	**CO2**	**CH4**
Demolition																											
Site Preparation (2 ac)																											
Graders	0,526	0,010	0,372	0,044	0,001	0,001	0,001	96,059	0,003	4,211	0,081	2,975	0,352	0,008	0,011	0,011	768,470	0,026	12,633	0,243	8,925	1,055	0,024	0,032	0,032	2 305,410	0,077
Tractors/Loaders/Backhoes	0,181	0,005	0,293	0,021	0,000	0,001	0,001	44,966	0,002	1,446	0,038	2,342	0,165	0,004	0,005	0,005	359,729	0,015	4,339	0,114	7,026	0,494	0,011	0,015	0,015	1 079,186	0,046
Rubber Tired Dozers	0,339	0,013	0,479	0,057	0,001	0,002	0,002	123,785	0,007	2,372	0,091	3,354	0,396	0,009	0,012	0,012	866,496	0,046	7,117	0,274	10,063	1,189	0,027	0,037	0,037	2 599,488	0,137
Scrapers																											
Grading (2 ac)																											
Rubber Tired Dozers	0,339	0,013	0,479	0,057	0,001	0,002	0,002	123,785	0,007	2,034	0,078	2,875	0,340	0,008	0,010	0,010	742,711	0,039	12,201	0,470	17,251	2,039	0,047	0,063	0,063	4 456,264	0,235
Concrete/Industrial Saws																											
Tractors/Loaders/Backhoes	0,181	0,005	0,293	0,021	0,000	0,001	0,001	44,966	0,002	1,266	0,033	2,049	0,144	0,003	0,004	0,004	314,763	0,013	7,594	0,199	12,296	0,864	0,020	0,027	0,027	1 888,575	0,080
Graders	0,526	0,010	0,372	0,044	0,001	0,001	0,001	96,059	0,003	3,158	0,061	2,231	0,264	0,006	0,008	0,008	576,353	0,019	18,949	0,365	13,387	1,582	0,037	0,049	0,049	3 458,115	0,116
Excavators																											
Scrapers																											
Building Construction (2 ac)																											
Cranes	0,419	0,009	0,325	0,038	0,001	0,001	0,001	83,931	0,003	2,512	0,053	1,949	0,230	0,005	0,007	0,007	503,585	0,018	552,677	11,697	428,885	50,686	1,170	1,560	1,560	110 788,687	3,899
Forklifts	0,058	0,002	0,145	0,010	0,000	0,000	0,000	22,301	0,001	0,348	0,014	0,871	0,061	0,001	0,002	0,002	133,808	0,006	76,664	3,108	191,659	13,468	0,311	0,414	0,414	29 437,806	1,295
Tractors/Loaders/Backhoes	0,181	0,005	0,293	0,021	0,000	0,001	0,001	44,966	0,002	1,085	0,028	1,757	0,123	0,003	0,004	0,004	269,796	0,011	238,654	6,267	386,441	27,155	0,627	0,836	0,836	59 355,217	2,507
Welders	0,646	0,016	0,561	0,376	0,001	0,001	0,001	77,804	0,005	5,169	0,131	4,491	3,012	0,008	0,009	0,009	622,434	0,044	1 137,074	28,915	987,922	662,631	1,687	1,928	1,928	136 935,412	9,638
Generator Sets	0,496	0,008	0,507	0,036	0,001	0,001	0,001	77,879	0,002	3,964	0,066	4,056	0,285	0,007	0,009	0,009	623,035	0,018	872,141	14,471	892,401	62,709	1,447	1,930	1,930	137 067,717	3,859
Paving - Asphalt (1 ac)																											
Pavers	0,671	0,007	0,265	0,031	0,001	0,001	0,001	68,408	0,003	4,699	0,051	1,854	0,219	0,005	0,007	0,007	478,853	0,023	46,992	0,506	18,537	2,191	0,051	0,067	0,067	4 788,530	0,228
Cement and Mortar Mixers	0,048	0,005	0,182	0,122	0,000	0,000	0,000	25,258	0,003	0,287	0,032	1,093	0,733	0,002	0,002	0,002	151,549	0,016	2,867	0,320	10,934	7,333	0,021	0,021	0,021	1 515,491	0,157
Rollers	0,438	0,004	0,248	0,017	0,000	0,001	0,001	38,088	0,002	3,063	0,028	1,736	0,122	0,003	0,004	0,004	266,614	0,013	30,626	0,281	17,358	1,220	0,028	0,038	0,038	2 666,141	0,127
Tractors/Loaders/Backhoes	0,181	0,005	0,293	0,021	0,000	0,001	0,001	44,966	0,002	1,266	0,033	2,049	0,144	0,003	0,004	0,004	314,763	0,013	12,656	0,332	20,493	1,440	0,033	0,044	0,044	3 147,625	0,133
Paving Equipment																											
Paving - Concrete (2 ac)																											
Pavers	0,671	0,007	0,265	0,031	0,001	0,001	0,001	68,408	0,003	4,028	0,043	1,589	0,188	0,004	0,006	0,006	410,445	0,020	40,279	0,433	15,889	1,878	0,043	0,058	0,058	4 104,454	0,195
Cement and Mortar Mixers	0,012	0,001	0,046	0,031	0,000	0,000	0,000	6,315	0,001	0,072	0,008	0,273	0,183	0,001	0,001	0,001	37,887	0,004	0,717	0,080	2,733	1,833	0,005	0,005	0,005	378,873	0,039
Rollers	0,438	0,004	0,248	0,017	0,000	0,001	0,001	38,088	0,002	3,063	0,028	1,736	0,122	0,003	0,004	0,004	266,614	0,013	30,626	0,281	17,358	1,220	0,028	0,038	0,038	2 666,141	0,127
Tractors/Loaders/Backhoes	0,181	0,005	0,293	0,021	0,000	0,001	0,001	44,966	0,002	1,446	0,038	2,342	0,165	0,004	0,005	0,005	359,729	0,015	14,464	0,380	23,421	1,646	0,038	0,051	0,051	3 597,286	0,152
Paving Equipment	0,579	0,006	0,230	0,027	0,001	0,001	0,001	59,537	0,003	4,631	0,050	1,844	0,218	0,005	0,007	0,007	476,297	0,022	46,306	0,503	18,438	2,179	0,050	0,067	0,067	4 762,971	0,218
Site Preparation - Pond (0 ac)																											
Graders																											
Tractors/Loaders/Backhoes																											
Rubber Tired Dozers																											
Scrapers																											
Excavation (0 cy)																											
Scrapers																											
Rubber Tired Dozers																											
Off-Highway Trucks																											
Other General Industrial Equipt																											

Total per Phase																											
Site Preparation	1,046	0,028	1,144	0,121	0,003	0,004	0,004	264,810	0,012	8,030	0,211	8,671	0,913	0,021	0,028	0,028	1 994,695	0,087	24,089	0,632	26,014	2,738	0,063	0,084	0,084	5 984,084	0,260
Grading	1,046	0,028	1,144	0,121	0,003	0,004	0,004	264,810	0,012	6,457	0,172	7,156	0,747	0,017	0,023	0,023	1 633,826	0,072	38,744	1,035	42,934	4,485	0,103	0,138	0,138	9 802,955	0,431
Building Construction	1,799	0,041	1,831	0,481	0,003	0,004	0,004	306,882	0,014	13,078	0,293	13,124	3,712	0,024	0,030	0,030	2 152,658	0,096	2 877,210	64,458	2 887,309	816,650	5,241	6,667	6,667	473 584,839	21,198
Paving - Asphalt	1,337	0,021	0,988	0,192	0,002	0,002	0,002	176,720	0,010	9,314	0,144	6,732	1,218	0,013	0,017	0,017	1 211,779	0,064	93,141	1,439	67,322	12,184	0,133	0,171	0,171	12 117,787	0,644
Paving - Concrete	1,880	0,024	1,082	0,127	0,002	0,003	0,003	217,313	0,010	13,239	0,168	7,784	0,876	0,017	0,022	0,022	1 550,972	0,073	132,391	1,677	77,840	8,756	0,165	0,218	0,218	15 509,725	0,731
Site Preparation - Pond	0,000	0,000	0,000	0,000	0,000	0,000	0,000	0,000	0,000	0,000	0,000	0,000	0,000	0,000	0,000	0,000	0,000	0,000	0,000	0,000	0,000	0,000	0,000	0,000	0,000	0,000	0,000
Excavation	0,000	0,000	0,000	0,000	0,000	0,000	0,000	0,000	0,000	0,000	0,000	0,000	0,000	0,000	0,000	0,000	0,000	0,000	0,000	0,000	0,000	0,000	0,000	0,000	0,000	0,000	0,000
Total																			**3 165,574**	**69,241**	**3 101,420**	**844,812**	**5,706**	**7,278**	**7,278**	**516 999,388**	**23,264**

WPWMA EIR
Construction Emissions - Proposed Project Exhaust Emissions
Plan Concept 2

Shared Site Utilities

Construction Period:	01.01.2032	to	
Number of workers:		Duration (weeks):	

Off Road Equipment Type	Area Size	Number (ea)	Daily Hours	Annual Days Equipment Used
Demolition				
Scraper - CAT 657				
Water Truck - 4000 gal, 3 axle, 58000 gvw				
Site Preparation (1 ac)	***1 ac***	***2***	***16***	***2***
Graders	1	1	8	2
Tractors/Loaders/Backhoes	1	1	8	2
Rubber Tired Dozers	1	0	0	0
Scrapers	1	0	0	0
Grading (1 ac)	***1 ac***	***4***	***21***	***4***
Rubber Tired Dozers	1	1	1	4
Concrete/Industrial Saws	1	1	8	4
Tractors/Loaders/Backhoes	1	2	6	4
Graders	1	0	0	0
Excavators	1	0	0	0
Scrapers	1	0	0	0
Building Construction (0 ac)	***0 ac***	***0***	***0***	***0***
Cranes	0	0	0	0
Forklifts	0	0	0	0
Tractors/Loaders/Backhoes	0	0	0	0
Welders	0	0	0	0
Generator Sets	0	0	0	0
Paving - Asphalt (0 ac)	***0 ac***	***0***	***0***	***0***
Pavers	0	0	0	0
Cement and Mortar Mixers	0	0	0	0
Rollers	0	0	0	0
Tractors/Loaders/Backhoes	0	0	0	0
Paving Equipment	0	0	0	0
Paving - Concrete (0 ac)	***0 ac***	***0***	***0***	***0***
Pavers	0	0	0	0
Cement and Mortar Mixers	0	0	0	0
Rollers	0	0	0	0
Tractors/Loaders/Backhoes	0	0	0	0
Paving Equipment	0	0	0	0
Site Preparation - Pond (0 ac)	***0 ac***	***0***	***0***	***0***
Graders	0	0	0	0
Tractors/Loaders/Backhoes	0	0	0	0
Rubber Tired Dozers	0	0	0	0
Scrapers	0	0	0	0
Excavation (7851.85185185185 cy)	***7852 cy***	***4***	***26***	***1***
Scrapers	7852	1	8	1
Rubber Tired Dozers	7852	1	8	1
Off-Highway Trucks	7852	1	8	1
Other General Industrial Equipment	7852	1	2	1

Area Size Reference Table	Size	Unit
Site Preparation	1	ac
Grading	1	ac
Building Construction	0	ac
Paving - Asphalt	0	ac
Paving - Concrete	0	ac
Site Preparation - Pond	0	ac
Excavation	7 852	cy

WPWMA EIR
Construction Emissions - Proposed Project Exhaust Emissions

Shared Site Utilities

Emission Factors					Emissions Factor (g/bhp-hr)								
Equipment Type	**HorsePower**	**Load Factor**	**Construction Year**	**Year+Equipment Type+HorsePower**	**CO**	**NOX**	**PM10**	**PM2.5**	**ROG**	**TOG**	**SO2**	**CO2**	**CH4**
Demolition													
Site Preparation (1 ac)													
Graders	187	0,41	2032	2030Graders250	2,20E+00	2,60E-01	8,00E-03	8,00E-03	6,00E-02	3,11E+00	6,00E-03	5,68E+02	1,90E-02
Tractors/Loaders/Backhoes	97	0,37	2032	2030Tractors/Loaders/Backhoes120	3,70E+00	2,60E-01	8,00E-03	8,00E-03	6,00E-02	2,29E+00	6,00E-03	5,68E+02	2,40E-02
Rubber Tired Dozers													
Scrapers													
Grading (1 ac)													
Rubber Tired Dozers	247	0,4	2032	2030Rubber Tired Dozers250	2,20E+00	2,60E-01	8,00E-03	8,00E-03	6,00E-02	1,56E+00	6,00E-03	5,68E+02	3,00E-02
Concrete/Industrial Saws	81	0,73	2032	2030Concrete/Industrial Saws120	3,70E+00	2,60E-01	8,00E-03	8,00E-03	6,00E-02	2,23E+00	6,00E-03	5,68E+02	1,90E-02
Tractors/Loaders/Backhoes	97	0,37	2032	2030Tractors/Loaders/Backhoes120	3,70E+00	2,60E-01	8,00E-03	8,00E-03	6,00E-02	2,29E+00	6,00E-03	5,68E+02	2,40E-02
Graders													
Excavators													
Scrapers													
Building Construction (0 ac)													
Cranes													
Forklifts													
Tractors/Loaders/Backhoes													
Welders													
Generator Sets													
Paving - Asphalt (0 ac)													
Pavers													
Cement and Mortar Mixers													
Rollers													
Tractors/Loaders/Backhoes													
Paving Equipment													
Paving - Concrete (0 ac)													
Pavers													
Cement and Mortar Mixers													
Rollers													
Tractors/Loaders/Backhoes													
Paving Equipment													
Site Preparation - Pond (0 ac)													
Graders													
Tractors/Loaders/Backhoes													
Rubber Tired Dozers													
Scrapers													
Excavation (7851.85185185185 cy)													
Scrapers	367	0,48	2032	2030Scrapers500	2,20E+00	2,60E-01	8,00E-03	8,00E-03	6,00E-02	2,70E+00	5,00E-03	5,68E+02	2,30E-02
Rubber Tired Dozers	247	0,4	2032	2030Rubber Tired Dozers250	2,20E+00	2,60E-01	8,00E-03	8,00E-03	6,00E-02	1,56E+00	6,00E-03	5,68E+02	3,00E-02
Off-Highway Trucks	402	0,38	2032	2030Off-Highway Trucks500	2,20E+00	2,60E-01	8,00E-03	8,00E-03	6,00E-02	1,52E+00	5,00E-03	5,68E+02	1,90E-02
Other General Industrial Equipn	88	0,34	2032	2030Other General Industrial Equipment1	3,70E+00	2,60E-01	8,00E-03	8,00E-03	6,00E-02	7,09E+00	6,00E-03	5,68E+02	2,70E-02

WPWMA EIR
Construction Emissions - Proposed Project Exhaust Emissions

Shared Site Utilities

	Hourly Emissions (lb/hr)									Daily Emissions (lb/day)									Annual Emissions (lb/yr)								
Equipment Type	**TOG**	**ROG**	**CO**	**NOX**	**SO2**	**PM10**	**PM2.5**	**CO2**	**CH4**	**TOG**	**ROG**	**CO**	**NOX**	**SO2**	**PM10**	**PM2.5**	**CO2**	**CH4**	**TOG**	**ROG**	**CO**	**NOX**	**SO2**	**PM10**	**PM2.5**	**CO2**	**CH4**
Demolition																											
Site Preparation (1 ac)																											
Graders	0,526	0,010	0,372	0,044	0,001	0,001	0,001	96,059	0,003	4,211	0,081	2,975	0,352	0,008	0,011	0,011	768,470	0,026	8,422	0,162	5,950	0,703	0,016	0,022	0,022	1 536,940	0,051
Tractors/Loaders/Backhoes	0,181	0,005	0,293	0,021	0,000	0,001	0,001	44,966	0,002	1,446	0,038	2,342	0,165	0,004	0,005	0,005	359,729	0,015	2,893	0,076	4,684	0,329	0,008	0,010	0,010	719,457	0,030
Rubber Tired Dozers																											
Scrapers																											
Grading (1 ac)																											
Rubber Tired Dozers	0,339	0,013	0,479	0,057	0,001	0,002	0,002	123,785	0,007	0,339	0,013	0,479	0,057	0,001	0,002	0,002	123,785	0,007	1,356	0,052	1,917	0,227	0,005	0,007	0,007	495,140	0,026
Concrete/Industrial Saws	0,290	0,008	0,482	0,034	0,001	0,001	0,001	74,083	0,002	2,321	0,063	3,859	0,271	0,006	0,008	0,008	592,665	0,020	9,286	0,250	15,435	1,085	0,025	0,033	0,033	2 370,660	0,079
Tractors/Loaders/Backhoes	0,362	0,009	0,586	0,041	0,001	0,001	0,001	89,932	0,004	2,170	0,057	3,513	0,247	0,006	0,008	0,008	539,593	0,023	8,678	0,228	14,052	0,987	0,023	0,030	0,030	2 158,372	0,091
Graders																											
Excavators																											
Scrapers																											
Building Construction (0 ac)																											
Cranes																											
Forklifts																											
Tractors/Loaders/Backhoes																											
Welders																											
Generator Sets																											
Paving - Asphalt (0 ac)																											
Pavers																											
Cement and Mortar Mixers																											
Rollers																											
Tractors/Loaders/Backhoes																											
Paving Equipment																											
Paving - Concrete (0 ac)																											
Pavers																											
Cement and Mortar Mixers																											
Rollers																											
Tractors/Loaders/Backhoes																											
Paving Equipment																											
Site Preparation - Pond (0 ac)																											
Graders																											
Tractors/Loaders/Backhoes																											
Rubber Tired Dozers																											
Scrapers																											
Excavation (7851.85185185185 cy)																											
Scrapers	1,047	0,023	0,854	0,101	0,002	0,003	0,003	220,708	0,009	8,379	0,186	6,835	0,808	0,016	0,025	0,025	1 765,667	0,071	8,379	0,186	6,835	0,808	0,016	0,025	0,025	1 765,667	0,071
Rubber Tired Dozers	0,339	0,013	0,479	0,057	0,001	0,002	0,002	123,785	0,007	2,711	0,105	3,834	0,453	0,010	0,014	0,014	990,281	0,052	2,711	0,105	3,834	0,453	0,010	0,014	0,014	990,281	0,052
Off-Highway Trucks	0,512	0,020	0,741	0,088	0,002	0,003	0,003	191,391	0,006	4,095	0,162	5,927	0,700	0,013	0,022	0,022	1 531,127	0,051	4,095	0,162	5,927	0,700	0,013	0,022	0,022	1 531,127	0,051
Other General Industrial Equip	0,468	0,004	0,244	0,017	0,000	0,001	0,001	37,486	0,002	0,935	0,008	0,488	0,034	0,001	0,001	0,001	74,973	0,004	0,935	0,008	0,488	0,034	0,001	0,001	0,001	74,973	0,004

Total per Phase																											
Site Preparation	0,707	0,015	0,665	0,065	0,001	0,002	0,002	141,025	0,005	5,657	0,119	5,317	0,516	0,012	0,016	0,016	1 128,199	0,041	11,314	0,238	10,634	1,032	0,024	0,032	0,032	2 256,397	0,082
Grading	0,991	0,030	1,547	0,132	0,003	0,004	0,004	287,800	0,013	4,830	0,133	7,851	0,575	0,013	0,018	0,018	1 256,043	0,049	19,320	0,530	31,404	2,299	0,053	0,071	0,071	5 024,173	0,197
Building Construction	0,000	0,000	0,000	0,000	0,000	0,000	0,000	0,000	0,000	0,000	0,000	0,000	0,000	0,000	0,000	0,000	0,000	0,000	0,000	0,000	0,000	0,000	0,000	0,000	0,000	0,000	0,000
Paving - Asphalt	0,000	0,000	0,000	0,000	0,000	0,000	0,000	0,000	0,000	0,000	0,000	0,000	0,000	0,000	0,000	0,000	0,000	0,000	0,000	0,000	0,000	0,000	0,000	0,000	0,000	0,000	0,000
Paving - Concrete	0,000	0,000	0,000	0,000	0,000	0,000	0,000	0,000	0,000	0,000	0,000	0,000	0,000	0,000	0,000	0,000	0,000	0,000	0,000	0,000	0,000	0,000	0,000	0,000	0,000	0,000	0,000
Site Preparation - Pond	0,000	0,000	0,000	0,000	0,000	0,000	0,000	0,000	0,000	0,000	0,000	0,000	0,000	0,000	0,000	0,000	0,000	0,000	0,000	0,000	0,000	0,000	0,000	0,000	0,000	0,000	0,000
Excavation	2,366	0,061	2,319	0,262	0,005	0,008	0,008	573,371	0,024	16,121	0,461	17,084	1,996	0,040	0,061	0,061	4 362,047	0,178	16,121	0,461	17,084	1,996	0,040	0,061	0,061	4 362,047	0,178
Total																			**46,756**	**1,229**	**59,122**	**5,327**	**0,117**	**0,164**	**0,164**	**11 642,617**	**0,457**

WPWMA EIR

Construction Emissions - Proposed Project Exhaust Emissions

		Maximum Daily Emissions (lb/day) - across all construction phases								
Element	**Year**	**TOG**	**ROG**	**CO**	**NOX**	**SO2**	**PM10**	**PM2.5**	**CO2**	**CH4**
Main Entrance	2024	3,513	0,211	8,671	1,218	0,018	0,028	0,028	1 665,884	0,538
New SW Ponds	2024	3,167	0,466	20,869	2,017	0,039	0,062	0,062	3 688,013	1,190
Unlined Area Excavation (1 of 3)	2024	6,816	1,341	50,768	5,813	0,112	0,179	0,179	10 587,101	3,425
Stockpile Relocation	2024	4,523	0,932	34,176	4,039	0,078	0,124	0,124	7 345,497	2,377
Public Area	2026	12,809	0,762	29,822	3,712	0,063	0,102	0,102	6 008,286	1,943
Public Area - SW Pond	2026	1,202	0,211	8,671	0,913	0,018	0,028	0,028	1 665,887	0,538
Unlined Area Excavation (3 of 3)	2026	6,201	1,341	50,768	5,813	0,112	0,179	0,179	10 581,904	3,425
Landfill Construction	2031	9,301	2,012	76,152	8,719	0,168	0,268	0,268	15 872,857	5,137
Landfill Lining & Partial Closure	2032	118,673	2,483	107,169	10,760	0,226	0,331	0,331	23 519,023	0,856
Admin Building	2032	9,314	0,144	7,851	1,218	0,014	0,019	0,019	1 322,797	0,064
Recovered Materials Storage	2032	13,239	0,293	13,124	3,712	0,024	0,030	0,030	2 152,658	0,096
Shared Site Utilities	2032	16,121	0,461	17,084	1,996	0,040	0,061	0,061	4 362,047	0,178

Note: Assumes element and associated stormwater pond are built concurrently (excavation is associated with pond construction), as opposed to sequentially.

	Maximum Daily Emissions (lb/day) - across all construction phases								
Year	**TOG**	**ROG**	**CO**	**NOX**	**SO2**	**PM10**	**PM2.5**	**CO2**	**CH4**
2024	18,019	2,950	114,484	13,088	0,246	0,393	0,393	23 286,495	7,529
2026	20,212	2,314	89,261	10,437	0,193	0,308	0,308	18 256,078	5,906
2031	9,301	2,012	76,152	8,719	0,168	0,268	0,268	15 872,857	5,137
2032	157,347	3,381	145,228	17,686	0,304	0,441	0,441	31 356,526	1,196

Total Annual GHG (lb/yr)							
Element	**Year**	**CO2**	**CH4**		**Year**	**CO2**	**CH4**
Main Entrance	2024	59 500,499	15,538		2024	3 307 577,953	########
New SW Ponds	2024	73 264,504	23,667		2026	2 054 678,031	590,437
Unlined Area Excavation (1 of 3)	2024	1 264 983,812	409,186		2031	2 994 889,564	969,230
Stockpile Relocation	2024	1 909 829,137	617,969		2032	4 997 253,148	188,288
Public Area	2026	785 288,393	179,638				
Public Area - SW Pond	2026	4 997,661	1,613				
Unlined Area Excavation (3 of 3)	2026	1 264 391,978	409,186				
Landfill Construction	2031	2 994 889,564	969,230				
Landfill Lining & Partial Closure	2032	4 172 535,622	152,206				
Admin Building	2032	296 075,520	12,361				
Recovered Materials Storage	2032	516 999,388	23,264				
Shared Site Utilities	2032	11 642,617	0,457				

WPWMA EIR
Construction Onroad Emissions
Plan Concept 1

= manual input

Worker Commute Vehicle Miles Traveled (VMT)

		Number of Equipment per Phase									
Element	**Year**	**Demolition**	**Site Preparation**	**Grading**	**Building Construction**	**Paving - Asphalt**	**Paving - Concrete**	**Site Preparation - Pond**	**Excavation**	**Lining and Partial Closure**	**Stockpile Movement**
Public Area	2024	0	7	8	7	8	5	N/A	N/A	N/A	N/A
Public Area - SW Pond	2024	N/A	N/A	N/A	N/A	N/A	N/A	3	4	N/A	N/A
Western Entrance	2024	0	3	3	0	5	7	0	0	N/A	N/A
Shared Site Utilities	2024	0	3	3	0	0	0	0	4	N/A	N/A
Compost Facility	2025	0	7	8	5	0	6	N/A	N/A	N/A	N/A
Compost Facility - SW Pond	2025	N/A	N/A	N/A	N/A	N/A	N/A	7	4	N/A	N/A
Landfill Construction[3]	2028	0	7	8	0	0	0	0	24	N/A	N/A
Landfill Lining & Partial Closure[4]	2029	0	0	0	0	0	0	0	4	44	N/A
Recovered Materials Storage	2029	0	3	3	7	7	5	0	0	N/A	N/A
HHW Storage	2029	0	2	4	5	0	0	0	0	N/A	N/A
Primary Maintenance Facility	2033	0	3	3	5	5	7	0	0	N/A	N/A
Stockpile Relocation	2033	0	0	0	0	0	0	0	0	N/A	5

1,25 = Number of Construction Workers per Construction Equipment

21,6 = Placer County APCD Urban Roundtrip H-W Distance (miles)

Worker Commute Vehicle Miles Traveled (VMT)

		Number of Construction Workers (also equivalent to Worker Commute Roundtrips) per Day[1]										Construction Worker Commute Vehicle Miles Traveled (VMT) per Day[2]									
Element	**Year**	**Demolition**	**Site Preparation**	**Grading**	**Building Construction[1]**	**Paving - Asphalt**	**Paving - Concrete**	**Site Preparation - Pond**	**Excavation**	**Lining and Partial Closure**	**Stockpile Movement**	**Demolition**	**Site Preparation**	**Grading**	**Building Construction**	**Paving - Asphalt**	**Paving - Concrete**	**Site Preparation - Pond**	**Excavation**	**Lining and Partial Closure**	**Stockpile Movement**
Public Area	2024	0	9	10	23	10	6	0	0	0	0	0	194	216	497	216	130	0	0	0	0
Public Area - SW Pond	2024	0	0	0	0	0	0	4	5	0	0	0	0	0	0	0	0	86	108	0	0
Western Entrance	2024	0	4	4	0	6	9	0	0	0	0	0	86	86	0	130	194	0	0	0	0
Shared Site Utilities	2024	0	4	4	0	0	0	0	5	0	0	0	86	86	0	0	0	0	108	0	0
Compost Facility	2025	0	9	10	17	0	8	0	0	0	0	0	194	216	367	0	173	0	0	0	0
Compost Facility - SW Pond	2025	0	0	0	0	0	0	9	5	0	0	0	0	0	0	0	0	194	108	0	0
Landfill Construction[3]	2028	0	9	10	0	0	0	0	20	0	0	0	194	216	0	0	0	0	432	0	0
Landfill Lining & Partial Closure[4]	2029	0	0	0	0	0	0	0	5	35	0	0	0	0	0	0	0	0	108	756	0
Recovered Materials Storage	2029	0	4	4	29	9	6	0	0	0	0	0	86	86	626	194	130	0	0	0	0
HHW Storage	2029	0	3	5	2	0	0	0	0	0	0	0	65	108	43	0	0	0	0	0	0
Primary Maintenance Facility	2033	0	4	4	5	6	9	0	0	0	0	0	86	86	108	130	194	0	0	0	0
Stockpile Relocation	2033	0	0	0	0	0	0	0	0	0	6	0	0	0	0	0	0	0	0	0	130

Notes:
[1] Number of Construction Workers is based on CalEEMod Appendix A assumption of 1.25 workers per equipment and 1 roundtrip per worker per day. Except for Building Construction, which is based on CalEEMod Appendix A assumption of 0.42 Daily Worker Trip Rate per 1,000 sq ft of building.
[2] VMT per day based on CalEEMod Appendix D urban roundtrip distance for Placer County APCD H-W (Home - Work).
[3] Landfill Construction Excavation construction workers based on information provided by WPWMA (20 workers per module).
[4] Landfill Lining & Partial Closure construction workers based on information provided by WPWMA (35 workers per lining/partial closure event).

Vendor/Material Hauling Vehicle Miles Traveled (VMT)

		Imported Material (cy)										Duration of Construction Phase (days)									
Element	**Year**	**Demolition**	**Site Preparation**	**Grading**	**Building Construction**	**Paving - Asphalt**	**Paving - Concrete**	**Site Preparation - Pond**	**Excavation**	**Lining and Partial Closure**	**Stockpile Movement**	**Demolition**	**Site Preparation**	**Grading**	**Building Construction**	**Paving - Asphalt**	**Paving - Concrete**	**Site Preparation - Pond**	**Excavation**	**Lining and Partial Closure**	**Stockpile Movement**
Public Area	2024	N/A	0	0	see next table	9 883	1 503	N/A	N/A	N/A	N/A	0	10	30	220	20	10	N/A	N/A	N/A	N/A
Public Area - SW Pond	2024	N/A	N/A	N/A	see next table	N/A	N/A	0	0	N/A	N/A	N/A	N/A	N/A	N/A	N/A	N/A	3	1	N/A	N/A
Western Entrance	2024	N/A	0	0	see next table	1 500	250	0	0	N/A	N/A	0	3	6	0	10	10	0	0	N/A	N/A
Shared Site Utilities	2024	N/A	0	0	see next table	0	0	0	0	N/A	N/A	0	3	6	0	0	0	0	2	N/A	N/A
Compost Facility	2025	N/A	0	0	see next table	0	42 272	N/A	N/A	N/A	N/A	0	30	75	200	0	55	N/A	N/A	N/A	N/A
Compost Facility - SW Pond	2025	N/A	N/A	N/A	see next table	N/A	N/A	0	0	N/A	N/A	N/A	N/A	N/A	N/A	N/A	N/A	10	3	N/A	N/A
Landfill Construction3	2028	N/A	0	0	see next table	0	0	0	0	N/A	N/A	0	10	30	0	0	0	0	175	N/A	N/A
Landfill Lining & Partial Closure4	2029	N/A	0	0	see next table	0	0	0	0	N/A	N/A	0	0	0	0	0	0	0	13	175	N/A
Recovered Materials Storage	2029	N/A	0	0	see next table	163	1 944	0	0	N/A	N/A	0	3	6	220	10	10	0	0	N/A	N/A
HHW Storage	2029	N/A	0	0	see next table	0	0	0	0	N/A	N/A	0	2	4	200	0	0	0	0	N/A	N/A
Primary Maintenance Facility	2033	N/A	0	0	see next table	1 750	333	0	0	N/A	N/A	0	3	6	200	10	10	0	0	N/A	N/A
Stockpile Relocation	2033	N/A	0	0	see next table	0	0	0	0	N/A	N/A	0	0	0	0	0	0	0	0	N/A	260

16 = Load Capacity per Haul Truck (cy)

14,6 = Placer County APCD Urban Roundtrip C-C Distance (miles)

Vendor/Material Hauling Vehicle Miles Traveled (VMT)

		Number of Vendor/Haul Vehicle Roundtrips per Day[1]										Vendor/Haul Vehicle Miles Traveled (VMT) per Day[2]									
Element	**Year**	**Demolition**	**Site Preparation**	**Grading**	**Building Construction[3]**	**Paving - Asphalt**	**Paving - Concrete**	**Site Preparation - Pond**	**Excavation**	**Lining and Partial Closure**	**Stockpile Movement**	**Demolition**	**Site Preparation**	**Grading**	**Building Construction**	**Paving - Asphalt**	**Paving - Concrete**	**Site Preparation - Pond**	**Excavation**	**Lining and Partial Closure**	**Stockpile Movement**
Public Area	2024	0	0	0	9	31	9	0	0	0	0	0	0	0	129	453	131	0	0	0	0
Public Area - SW Pond	2024	0	0	0	0	0	0	0	0	0	0	0	0	0	0	0	0	0	0	0	0
Western Entrance	2024	0	0	0	0	9	2	0	0	0	0	0	0	0	0	131	29	0	0	0	0
Shared Site Utilities	2024	0	0	0	0	0	0	0	0	0	0	0	0	0	0	0	0	0	0	0	0
Compost Facility	2025	0	0	0	7	0	48	0	0	0	0	0	0	0	97	0	701	0	0	0	0
Compost Facility - SW Pond	2025	0	0	0	0	0	0	0	0	0	0	0	0	0	0	0	0	0	0	0	0
Landfill Construction3	2028	0	0	0	0	0	0	0	0	0	0	0	0	0	0	0	0	0	0	0	0
Landfill Lining & Partial Closure4	2029	0	0	0	0	0	0	0	0	0	0	0	0	0	0	0	0	0	0	0	0
Recovered Materials Storage	2029	0	0	0	11	1	12	0	0	0	0	0	0	0	168	15	175	0	0	0	0
HHW Storage	2029	0	0	0	1	0	0	0	0	0	0	0	0	0	12	0	0	0	0	0	0
Primary Maintenance Facility	2033	0	0	0	2	11	2	0	0	0	0	0	0	0	29	161	29	0	0	0	0
Stockpile Relocation	2033	0	0	0	0	0	0	0	0	0	0	0	0	0	0	0	0	0	0	0	0

Notes:
[1] Haul truck load capacity of 16 cy per CalEEMod Appendix A.
[2] VMT per day based on CalEEMod Appendix D urban roundtrip distance for Placer County APCD C-C (Commercial - Customer).
[3] Building Construction Number of Vendor/Haul Vehicle Roundtrips is based on CalEEMod Appendix A assumption of 0.1639 Daily Vendor Trip Rate per 1,000 sq ft of building.

WPWMA EIR
Construction Onroad Emissions
Plan Concept 1

Building Construction Workers & Vendor Trips

Element	Year	Building Size (sq ft)	Construction Worker Roundtrips per Day	Vendor Roundtrips per Day[2]
Public Area	2024	54 100	23	9
Public Area - SW Pond	2024		0	0
Western Entrance	2024		0	0
Shared Site Utilities	2024		0	0
Compost Facility	2025	40 600	17	7
Compost Facility - SW Pond	2025		0	0
Landfill Construction3	2028		0	0
Landfill Lining & Partial Closure4	2029		0	0
Recovered Materials Storage	2029	70 000	29	11
HHW Storage	2029	4 875	2	1
Primary Maintenance Facility	2033	12 000	5	2
Stockpile Relocation	2033		0	0

Note:
[1] Construction Worker Roundtrips based on CalEEMod Appendix A assumption of 0.42 daily worker trips per day per 1,000 sq ft of building.
[2] Vendor Roundtrips based on CalEEMod Appendix A assumption of 0.1639 vendor trips per day per 1,000 sq ft of building.

Worker Commute Vehicle Mix

Vehicle Type	Percent[1]
Light Duty Auto (LDA), Gasoline	50%
Light-Duty Truck Type 1 (LDT1), Gasoline	25%
Light-Duty Truck Type 2 (LDT2), Gasoline	25%

Note:
[1] Assumed worker commute vehicle mix per CalEEMod Appendix A.

Vendor/Haul Vehicle Mix

Vehicle Type	Percent[1]
Medium Heavy-Duty Truck (MHDT), Diesel	0%
Heavy Heavy-Duty Truck (HHDT), Diesel	100%

Note:
[1] Assumed vendor/haul vehicle mix per CalEEMod Appendix A.

Derivation of Paved Road Fugitive Emission Factors

Parameter	PM_{10}	$PM_{2.5}$
Average Weight [a]	2,4	2,4
k [b]	1	0,25
sL [a]	0,1	0,1
Emission Factor (g/mile) [c]	**0,300**	**0,075**

Notes:
[a] Average Weight and sL taken as the default value from CalEEMod.
[b] k taken from Table 13.2.1-1 of Section 13.2.1 of *AP-42* (USEPA, 2011).

[c] Emission factor calculated using Equation 1 from Section 13.2.1 of *AP-42* (USEPA, 2011), which is generally consistent with Section 5.3 of Appendix A of the *CalEEMod User's Guide* (Breeze Software, 2017):

$$\text{Emission Factor (g/mile)} = k \text{ (g/mile)} \times [sL \text{ (g/m}^2)]^{0.91} \times [\text{Average Weight (tons)}]^{1.02}$$

Derivation of Unpaved Road Fugitive Emission Factors

Parameter	PM_{10}	$PM_{2.5}$
Mean Vehicle Weight [a]	16,5	16,5
Silt Content [b]	8,5	8,5
k [c]	1,50	0,15
a [c]	0,9	0,9
b [c]	0,45	0,45
P [d]	74	74
Emission Factor (g/mile) [e]	**856,528**	**85,653**

Notes:
[a] Mean vehicle weight assumes that heavy- and light-duty trucks weigh an average of 16.5 tons.
[b] Silt content taken from Table 13.2.2-1 of Section 13.2.2 of *AP-42* (USEPA, 2006) for a Construction Site, Scraper Route; this value is consistent with the CalEEMod defaults.
[c] k, a, and b taken from Table 13.2.2-2 of Section 13.2.2 of *AP-42* (USEPA, 2006) for industrial roads.

[d] P (days of precipitation) taken as the CalEEMod default for the Placer-Sacramento County climate region. Taken from Table 1.1 of Appendix D of the *CalEEMod User's Guide* (Breeze Software, 2017).
[e] Emission factor calculated using Equations 1a and 2 from Section 13.2.2 of *AP-42* (USEPA, 2006):

$$\text{Emission Factor (g/mile)} = \{k \text{ (lbs/mile)} \times [\text{Silt Content (\%)} / 12]^{a} \times [\text{Mean Vehicle Weight (tons)} / 3]^{b}\} \times [(365\text{-}P) / 365] \times 453.6 \text{ (g/lb)}$$

WPWMA EIR
Construction Onroad Emissions
Plan Concept 1

Vehicle Exhaust Emission Factors

		Exhaust Emission Factors (g/mile) [a]													
Vehicle Class	**Calendar Year**	**TOG**	**ROG**	**CO**	**NO_x**	**SO_x**	**PM_{10}**	**$PM_{2.5}$**	**CO_2**	**CH_4**	**N_2O**	RUNEX PM10	PMBW PM10	PMTW PM10	RUNEX PM2.5	PMBW PM2.5	PMTW PM2.5
Light Duty Auto (LDA), Gasoline	2024	7,64E-03	5,23E-03	5,32E-01	2,58E-02	2,15E-03	4,58E-02	1,88E-02	2,14E+02	1,80E-03	3,78E-03	1,09E-03	3,68E-02	8,00E-03	1,00E-03	1,58E-02	2,00E-03
Light Duty Auto (LDA), Gasoline	2025	6,75E-03	4,62E-03	5,06E-01	2,36E-02	2,08E-03	4,58E-02	1,87E-02	2,08E+02	1,62E-03	3,59E-03	1,05E-03	3,68E-02	8,00E-03	9,69E-04	1,58E-02	2,00E-03
Light Duty Auto (LDA), Gasoline	2026	6,01E-03	4,12E-03	4,84E-01	2,19E-02	2,03E-03	4,58E-02	1,87E-02	2,02E+02	1,47E-03	3,43E-03	1,01E-03	3,68E-02	8,00E-03	9,28E-04	1,58E-02	2,00E-03
Light Duty Auto (LDA), Gasoline	2028	4,89E-03	3,35E-03	4,51E-01	1,95E-02	1,93E-03	4,56E-02	1,86E-02	1,93E+02	1,24E-03	3,21E-03	8,92E-04	3,68E-02	8,00E-03	8,20E-04	1,58E-02	2,00E-03
Light Duty Auto (LDA), Gasoline	2029	4,46E-03	3,06E-03	4,38E-01	1,86E-02	1,89E-03	4,56E-02	1,85E-02	1,89E+02	1,15E-03	3,13E-03	8,32E-04	3,68E-02	8,00E-03	7,65E-04	1,58E-02	2,00E-03
Light Duty Auto (LDA), Gasoline	2031	3,78E-03	2,59E-03	4,18E-01	1,74E-02	1,82E-03	4,55E-02	1,84E-02	1,82E+02	1,01E-03	3,03E-03	7,26E-04	3,68E-02	8,00E-03	6,68E-04	1,58E-02	2,00E-03
Light Duty Auto (LDA), Gasoline	2032	3,50E-03	2,40E-03	4,10E-01	1,69E-02	1,80E-03	4,54E-02	1,84E-02	1,79E+02	9,50E-04	2,99E-03	6,80E-04	3,68E-02	8,00E-03	6,25E-04	1,58E-02	2,00E-03
Light Duty Auto (LDA), Gasoline	2033	3,27E-03	2,24E-03	4,04E-01	1,66E-02	1,78E-03	4,54E-02	1,83E-02	1,77E+02	9,00E-04	2,96E-03	6,38E-04	3,68E-02	8,00E-03	5,87E-04	1,58E-02	2,00E-03
Light-Duty Truck Type 1 (LDT1), Gasoline	2024	1,35E-02	9,26E-03	6,94E-01	4,31E-02	2,51E-03	4,60E-02	1,89E-02	2,50E+02	2,77E-03	5,12E-03	1,27E-03	3,68E-02	8,00E-03	1,17E-03	1,58E-02	2,00E-03
Light-Duty Truck Type 1 (LDT1), Gasoline	2025	1,16E-02	7,95E-03	6,41E-01	3,80E-02	2,44E-03	4,60E-02	1,89E-02	2,43E+02	2,43E-03	4,72E-03	1,20E-03	3,68E-02	8,00E-03	1,11E-03	1,58E-02	2,00E-03
Light-Duty Truck Type 1 (LDT1), Gasoline	2026	1,00E-02	6,88E-03	5,97E-01	3,40E-02	2,38E-03	4,59E-02	1,88E-02	2,37E+02	2,16E-03	4,40E-03	1,14E-03	3,68E-02	8,00E-03	1,05E-03	1,58E-02	2,00E-03
Light-Duty Truck Type 1 (LDT1), Gasoline	2028	7,65E-03	5,24E-03	5,29E-01	2,79E-02	2,27E-03	4,57E-02	1,87E-02	2,26E+02	1,72E-03	3,91E-03	9,96E-04	3,68E-02	8,00E-03	9,16E-04	1,58E-02	2,00E-03
Light-Duty Truck Type 1 (LDT1), Gasoline	2029	6,71E-03	4,60E-03	5,02E-01	2,56E-02	2,22E-03	4,57E-02	1,86E-02	2,22E+02	1,55E-03	3,73E-03	9,27E-04	3,68E-02	8,00E-03	8,52E-04	1,58E-02	2,00E-03
Light-Duty Truck Type 1 (LDT1), Gasoline	2031	5,23E-03	3,58E-03	4,60E-01	2,18E-02	2,15E-03	4,56E-02	1,85E-02	2,14E+02	1,28E-03	3,44E-03	8,05E-04	3,68E-02	8,00E-03	7,40E-04	1,58E-02	2,00E-03
Light-Duty Truck Type 1 (LDT1), Gasoline	2032	4,67E-03	3,20E-03	4,44E-01	2,05E-02	2,11E-03	4,55E-02	1,84E-02	2,11E+02	1,17E-03	3,33E-03	7,53E-04	3,68E-02	8,00E-03	6,92E-04	1,58E-02	2,00E-03
Light-Duty Truck Type 1 (LDT1), Gasoline	2033	4,19E-03	2,87E-03	4,31E-01	1,94E-02	2,09E-03	4,55E-02	1,84E-02	2,08E+02	1,08E-03	3,25E-03	7,07E-04	3,68E-02	8,00E-03	6,50E-04	1,58E-02	2,00E-03
Light-Duty Truck Type 2 (LDT2), Gasoline	2024	1,06E-02	7,28E-03	6,35E-01	3,87E-02	2,68E-03	4,59E-02	1,88E-02	2,68E+02	2,44E-03	4,83E-03	1,10E-03	3,68E-02	8,00E-03	1,01E-03	1,58E-02	2,00E-03
Light-Duty Truck Type 2 (LDT2), Gasoline	2025	9,51E-03	6,52E-03	6,03E-01	3,46E-02	2,59E-03	4,58E-02	1,87E-02	2,59E+02	2,23E-03	4,49E-03	1,07E-03	3,68E-02	8,00E-03	9,85E-04	1,58E-02	2,00E-03
Light-Duty Truck Type 2 (LDT2), Gasoline	2026	8,56E-03	5,87E-03	5,77E-01	3,13E-02	2,51E-03	4,58E-02	1,87E-02	2,51E+02	2,04E-03	4,20E-03	1,03E-03	3,68E-02	8,00E-03	9,50E-04	1,58E-02	2,00E-03
Light-Duty Truck Type 2 (LDT2), Gasoline	2028	7,02E-03	4,81E-03	5,34E-01	2,62E-02	2,36E-03	4,57E-02	1,86E-02	2,36E+02	1,74E-03	3,76E-03	9,29E-04	3,68E-02	8,00E-03	8,54E-04	1,58E-02	2,00E-03
Light-Duty Truck Type 2 (LDT2), Gasoline	2029	6,39E-03	4,38E-03	5,17E-01	2,42E-02	2,30E-03	4,56E-02	1,86E-02	2,30E+02	1,61E-03	3,60E-03	8,74E-04	3,68E-02	8,00E-03	8,03E-04	1,58E-02	2,00E-03
Light-Duty Truck Type 2 (LDT2), Gasoline	2031	5,38E-03	3,69E-03	4,90E-01	2,12E-02	2,19E-03	4,55E-02	1,85E-02	2,19E+02	1,40E-03	3,34E-03	7,70E-04	3,68E-02	8,00E-03	7,08E-04	1,58E-02	2,00E-03
Light-Duty Truck Type 2 (LDT2), Gasoline	2032	4,97E-03	3,41E-03	4,80E-01	2,01E-02	2,15E-03	4,55E-02	1,84E-02	2,15E+02	1,32E-03	3,25E-03	7,23E-04	3,68E-02	8,00E-03	6,65E-04	1,58E-02	2,00E-03
Light-Duty Truck Type 2 (LDT2), Gasoline	2033	4,62E-03	3,16E-03	4,71E-01	1,92E-02	2,11E-03	4,54E-02	1,84E-02	2,11E+02	1,24E-03	3,17E-03	6,80E-04	3,68E-02	8,00E-03	6,25E-04	1,58E-02	2,00E-03
Medium Heavy-Duty Truck (MHDT), Diesel	2024	6,54E-03	5,75E-03	5,62E-02	8,30E-01	7,34E-03	1,47E-01	6,29E-02	7,69E+02	2,67E-04	1,23E-01	4,21E-03	1,30E-01	1,20E-02	4,03E-03	5,59E-02	3,00E-03
Medium Heavy-Duty Truck (MHDT), Diesel	2025	6,49E-03	5,70E-03	5,64E-02	8,31E-01	7,19E-03	1,47E-01	6,29E-02	7,54E+02	2,65E-04	1,21E-01	4,23E-03	1,30E-01	1,20E-02	4,05E-03	5,59E-02	3,00E-03
Medium Heavy-Duty Truck (MHDT), Diesel	2026	6,45E-03	5,66E-03	5,65E-02	8,32E-01	7,07E-03	1,47E-01	6,29E-02	7,41E+02	2,63E-04	1,19E-01	4,24E-03	1,30E-01	1,20E-02	4,06E-03	5,59E-02	3,00E-03
Medium Heavy-Duty Truck (MHDT), Diesel	2028	6,38E-03	5,61E-03	5,67E-02	8,34E-01	6,82E-03	1,47E-01	6,29E-02	7,15E+02	2,60E-04	1,14E-01	4,27E-03	1,30E-01	1,20E-02	4,09E-03	5,59E-02	3,00E-03
Medium Heavy-Duty Truck (MHDT), Diesel	2029	6,36E-03	5,59E-03	5,69E-02	8,36E-01	6,71E-03	1,47E-01	6,30E-02	7,04E+02	2,59E-04	1,13E-01	4,29E-03	1,30E-01	1,20E-02	4,11E-03	5,59E-02	3,00E-03
Medium Heavy-Duty Truck (MHDT), Diesel	2031	6,32E-03	5,56E-03	5,71E-02	8,41E-01	6,54E-03	1,47E-01	6,30E-02	6,86E+02	2,58E-04	1,10E-01	4,33E-03	1,30E-01	1,20E-02	4,14E-03	5,59E-02	3,00E-03
Medium Heavy-Duty Truck (MHDT), Diesel	2032	6,31E-03	5,54E-03	5,72E-02	8,43E-01	6,47E-03	1,47E-01	6,30E-02	6,78E+02	2,57E-04	1,08E-01	4,35E-03	1,30E-01	1,20E-02	4,16E-03	5,59E-02	3,00E-03
Medium Heavy-Duty Truck (MHDT), Diesel	2033	6,30E-03	5,54E-03	5,73E-02	8,45E-01	6,41E-03	1,47E-01	6,30E-02	6,72E+02	2,57E-04	1,07E-01	4,37E-03	1,30E-01	1,20E-02	4,18E-03	5,59E-02	3,00E-03
Heavy Heavy-Duty Truck (HHDT), Diesel	2024	1,70E-02	1,49E-02	1,54E-01	1,94E+00	1,14E-02	1,09E-01	4,62E-02	1,19E+03	6,92E-04	1,99E-01	1,13E-02	6,17E-02	3,60E-02	1,08E-02	2,65E-02	9,00E-03
Heavy Heavy-Duty Truck (HHDT), Diesel	2025	1,68E-02	1,48E-02	1,53E-01	1,90E+00	1,11E-02	1,09E-01	4,62E-02	1,16E+03	6,85E-04	1,95E-01	1,12E-02	6,17E-02	3,60E-02	1,07E-02	2,65E-02	9,00E-03
Heavy Heavy-Duty Truck (HHDT), Diesel	2026	1,66E-02	1,46E-02	1,53E-01	1,86E+00	1,08E-02	1,09E-01	4,60E-02	1,14E+03	6,78E-04	1,91E-01	1,11E-02	6,17E-02	3,60E-02	1,06E-02	2,65E-02	9,00E-03
Heavy Heavy-Duty Truck (HHDT), Diesel	2028	1,62E-02	1,42E-02	1,51E-01	1,79E+00	1,03E-02	1,09E-01	4,58E-02	1,08E+03	6,62E-04	1,82E-01	1,08E-02	6,17E-02	3,60E-02	1,03E-02	2,65E-02	9,00E-03
Heavy Heavy-Duty Truck (HHDT), Diesel	2029	1,60E-02	1,41E-02	1,50E-01	1,76E+00	1,01E-02	1,08E-01	4,56E-02	1,06E+03	6,53E-04	1,77E-01	1,06E-02	6,17E-02	3,60E-02	1,02E-02	2,65E-02	9,00E-03
Heavy Heavy-Duty Truck (HHDT), Diesel	2031	1,56E-02	1,37E-02	1,48E-01	1,70E+00	9,66E-03	1,08E-01	4,54E-02	1,01E+03	6,36E-04	1,69E-01	1,03E-02	6,17E-02	3,60E-02	9,90E-03	2,65E-02	9,00E-03
Heavy Heavy-Duty Truck (HHDT), Diesel	2032	1,54E-02	1,35E-02	1,48E-01	1,68E+00	9,50E-03	1,08E-01	4,53E-02	9,95E+02	6,29E-04	1,66E-01	1,02E-02	6,17E-02	3,60E-02	9,79E-03	2,65E-02	9,00E-03
Heavy Heavy-Duty Truck (HHDT), Diesel	2033	1,53E-02	1,34E-02	1,47E-01	1,66E+00	9,35E-03	1,08E-01	4,52E-02	9,80E+02	6,22E-04	1,63E-01	1,01E-02	6,17E-02	3,60E-02	9,70E-03	2,65E-02	9,00E-03

Notes:

[a] Exhaust Emission Factors in grams per mile (g/mile) were from EMFAC2017 for Placer County. A speed of 40 miles per hour (mph) was assumed for onroad vehicles, which is consistent with the CalEEMod default. An average temperature of 64 degrees Fahrenheit (°F) and humidity of 54% were used per Table B-1 of CT-EMFAC: A Computer Model to Estimate Transportation Project Emissions (UC-Davis, 2007).

On-Road Vehicle Emission Factors

				Exhaust Emission Factors (g/mile) [c]											Fugitive Emission Factors (g/mile) [d]	
Vehicle Type [a]	**Calendar Year**	**Frequency on Unpaved Road (%) [b]**	**Frequency on Paved Road (%) [b]**	**TOG**	**ROG**	**CO**	**NO_x**	**SO_x**	**PM_{10}**	**$PM_{2.5}$**	**CO_2**	**CH_4**	**N_2O**	**PM_{10}**	**$PM_{2.5}$**
Worker Commute	2024	10%	90%	0,010	0,007	0,598	0,033	0,002	0,046	0,019	236,7	0,002	0,004	85,9	8,6
Worker Commute	2025	10%	90%	0,009	0,006	0,564	0,030	0,002	0,046	0,019	229,5	0,002	0,004	85,9	8,6
Worker Commute	2026	10%	90%	0,008	0,005	0,535	0,027	0,002	0,046	0,019	223,0	0,002	0,004	85,9	8,6
Worker Commute	2028	10%	90%	0,006	0,004	0,491	0,023	0,002	0,046	0,019	211,9	0,001	0,004	85,9	8,6
Worker Commute	2029	10%	90%	0,006	0,004	0,474	0,022	0,002	0,046	0,019	207,2	0,001	0,003	85,9	8,6
Worker Commute	2031	10%	90%	0,005	0,003	0,447	0,019	0,002	0,046	0,018	199,4	0,001	0,003	85,9	8,6
Worker Commute	2032	10%	90%	0,004	0,003	0,436	0,019	0,002	0,045	0,018	196,2	0,001	0,003	85,9	8,6
Worker Commute	2033	10%	90%	0,004	0,003	0,427	0,018	0,002	0,045	0,018	193,4	0,001	0,003	85,9	8,6
Vendor/Material Hauling	2024	10%	90%	0,017	0,015	0,154	1,937	0,011	0,109	0,046	1190,1	0,001	0,199	85,9	8,6
Vendor/Material Hauling	2025	10%	90%	0,017	0,015	0,153	1,900	0,011	0,109	0,046	1163,4	0,001	0,195	85,9	8,6
Vendor/Material Hauling	2026	10%	90%	0,017	0,015	0,153	1,859	0,011	0,109	0,046	1136,5	0,001	0,191	85,9	8,6
Vendor/Material Hauling	2028	10%	90%	0,016	0,014	0,151	1,789	0,010	0,109	0,046	1081,6	0,001	0,182	85,9	8,6
Vendor/Material Hauling	2029	10%	90%	0,016	0,014	0,150	1,757	0,010	0,108	0,046	1056,5	0,001	0,177	85,9	8,6
Vendor/Material Hauling	2031	10%	90%	0,016	0,014	0,148	1,701	0,010	0,108	0,045	1013,0	0,001	0,169	85,9	8,6
Vendor/Material Hauling	2032	10%	90%	0,015	0,014	0,148	1,680	0,009	0,108	0,045	995,4	0,001	0,166	85,9	8,6
Vendor/Material Hauling	2033	10%	90%	0,015	0,013	0,147	1,661	0,009	0,108	0,045	980,2	0,001	0,163	85,9	8,6

Notes:

[a] Vehicle mixes are presented in the Worker Commute Vehicle Mix and Vendor/Haul Vehicle Mix tables.

[b] On-road vehicles are assumed to be on paved roads 10% of the time and on unpaved roads 90% of the time.

[c] Exhaust Emission Factors in grams per mile (g/mile) were from EMFAC2017 for Placer County. A speed of 40 miles per hour (mph) was assumed for onroad vehicles, which is consistent with the CalEEMod default. An average temperature of 64 degrees Fahrenheit (°F) and humidity of 54% were used per Table B-1 of *CT-EMFAC: A Computer Model to Estimate Transportation Project Emissions* (UC-Davis, 2007). See Vehicle Exhaust Emission Factors table for the emission factors.

[d] Fugitive Emission Factors in grams per mile (g/mile) were calculated using *AP-42* methodology, as detailed in the Derivation of Paved Road Fugitive Emission Factors and Derivation of Unpaved Road Fugitive Emission Factors tables.

WPWMA EIR
Construction Onroad Emissions
Plan Concept 1

On-Road Vehicle Emissions

					Exhaust Emissions (lbs/day) [1]										Fugitive Emissions (lbs/day) [1]		Total Emissions (lbs/day)										Annual (lb/yr)
Element	**Year**	**Phase**	**Vehicle Type**	**VMT Per Day**	**TOG**	**ROG**	**CO**	**NO_X**	**SO_X**	**PM_{10}**	**$PM_{2.5}$**	**CO_2**	**CH_4**	**N_2O**	**PM_{10}**	**$PM_{2.5}$**	**TOG**	**ROG**	**CO**	**NO_X**	**SO_X**	**PM_{10}**	**$PM_{2.5}$**	**CO_2**	**CH_4**	**N_2O**	**dpm**
Public Area	2024	Demolition	Worker Commute	0	0,000	0,000	0,000	0,000	0,000	0,000	0,000	0,000	0,000	0,000	0,000	0,000	0,000	0,000	0,000	0,000	0,000	0,000	0,000	0,000	0,000	0,000	0,000
Public Area - SW Pond	2024	Demolition	Worker Commute	0	0,000	0,000	0,000	0,000	0,000	0,000	0,000	0,000	0,000	0,000	0,000	0,000	0,000	0,000	0,000	0,000	0,000	0,000	0,000	0,000	0,000	0,000	0,000
Western Entrance	2024	Demolition	Worker Commute	0	0,000	0,000	0,000	0,000	0,000	0,000	0,000	0,000	0,000	0,000	0,000	0,000	0,000	0,000	0,000	0,000	0,000	0,000	0,000	0,000	0,000	0,000	0,000
Shared Site Utilities	2024	Demolition	Worker Commute	0	0,000	0,000	0,000	0,000	0,000	0,000	0,000	0,000	0,000	0,000	0,000	0,000	0,000	0,000	0,000	0,000	0,000	0,000	0,000	0,000	0,000	0,000	0,000
Compost Facility	2025	Demolition	Worker Commute	0	0,000	0,000	0,000	0,000	0,000	0,000	0,000	0,000	0,000	0,000	0,000	0,000	0,000	0,000	0,000	0,000	0,000	0,000	0,000	0,000	0,000	0,000	0,000
Compost Facility - SW Pond	2025	Demolition	Worker Commute	0	0,000	0,000	0,000	0,000	0,000	0,000	0,000	0,000	0,000	0,000	0,000	0,000	0,000	0,000	0,000	0,000	0,000	0,000	0,000	0,000	0,000	0,000	0,000
Landfill Construction3	2028	Demolition	Worker Commute	0	0,000	0,000	0,000	0,000	0,000	0,000	0,000	0,000	0,000	0,000	0,000	0,000	0,000	0,000	0,000	0,000	0,000	0,000	0,000	0,000	0,000	0,000	0,000
Landfill Lining & Partial Closure4	2029	Demolition	Worker Commute	0	0,000	0,000	0,000	0,000	0,000	0,000	0,000	0,000	0,000	0,000	0,000	0,000	0,000	0,000	0,000	0,000	0,000	0,000	0,000	0,000	0,000	0,000	0,000
Recovered Materials Storage	2029	Demolition	Worker Commute	0	0,000	0,000	0,000	0,000	0,000	0,000	0,000	0,000	0,000	0,000	0,000	0,000	0,000	0,000	0,000	0,000	0,000	0,000	0,000	0,000	0,000	0,000	0,000
HHW Storage	2029	Demolition	Worker Commute	0	0,000	0,000	0,000	0,000	0,000	0,000	0,000	0,000	0,000	0,000	0,000	0,000	0,000	0,000	0,000	0,000	0,000	0,000	0,000	0,000	0,000	0,000	0,000
Primary Maintenance Facility	2033	Demolition	Worker Commute	0	0,000	0,000	0,000	0,000	0,000	0,000	0,000	0,000	0,000	0,000	0,000	0,000	0,000	0,000	0,000	0,000	0,000	0,000	0,000	0,000	0,000	0,000	0,000
Stockpile Relocation	2033	Demolition	Worker Commute	0	0,000	0,000	0,000	0,000	0,000	0,000	0,000	0,000	0,000	0,000	0,000	0,000	0,000	0,000	0,000	0,000	0,000	0,000	0,000	0,000	0,000	0,000	0,000
Public Area	2024	Site Preparation	Worker Commute	0	0,000	0,000	0,000	0,000	0,000	0,000	0,000	0,000	0,000	0,000	0,000	0,000	0,000	0,000	0,000	0,000	0,000	0,000	0,000	0,000	0,000	0,000	0,000
Public Area - SW Pond	2024	Site Preparation	Worker Commute	0	0,000	0,000	0,000	0,000	0,000	0,000	0,000	0,000	0,000	0,000	0,000	0,000	0,000	0,000	0,000	0,000	0,000	0,000	0,000	0,000	0,000	0,000	0,000
Western Entrance	2024	Site Preparation	Worker Commute	0	0,000	0,000	0,000	0,000	0,000	0,000	0,000	0,000	0,000	0,000	0,000	0,000	0,000	0,000	0,000	0,000	0,000	0,000	0,000	0,000	0,000	0,000	0,000
Shared Site Utilities	2024	Site Preparation	Worker Commute	0	0,000	0,000	0,000	0,000	0,000	0,000	0,000	0,000	0,000	0,000	0,000	0,000	0,000	0,000	0,000	0,000	0,000	0,000	0,000	0,000	0,000	0,000	0,000
Compost Facility	2025	Site Preparation	Worker Commute	0	0,000	0,000	0,000	0,000	0,000	0,000	0,000	0,000	0,000	0,000	0,000	0,000	0,000	0,000	0,000	0,000	0,000	0,000	0,000	0,000	0,000	0,000	0,000
Compost Facility - SW Pond	2025	Site Preparation	Worker Commute	0	0,000	0,000	0,000	0,000	0,000	0,000	0,000	0,000	0,000	0,000	0,000	0,000	0,000	0,000	0,000	0,000	0,000	0,000	0,000	0,000	0,000	0,000	0,000
Landfill Construction3	2028	Site Preparation	Worker Commute	0	0,000	0,000	0,000	0,000	0,000	0,000	0,000	0,000	0,000	0,000	0,000	0,000	0,000	0,000	0,000	0,000	0,000	0,000	0,000	0,000	0,000	0,000	0,000
Landfill Lining & Partial Closure4	2029	Site Preparation	Worker Commute	0	0,000	0,000	0,000	0,000	0,000	0,000	0,000	0,000	0,000	0,000	0,000	0,000	0,000	0,000	0,000	0,000	0,000	0,000	0,000	0,000	0,000	0,000	0,000
Recovered Materials Storage	2029	Site Preparation	Worker Commute	0	0,000	0,000	0,000	0,000	0,000	0,000	0,000	0,000	0,000	0,000	0,000	0,000	0,000	0,000	0,000	0,000	0,000	0,000	0,000	0,000	0,000	0,000	0,000
HHW Storage	2029	Site Preparation	Worker Commute	0	0,000	0,000	0,000	0,000	0,000	0,000	0,000	0,000	0,000	0,000	0,000	0,000	0,000	0,000	0,000	0,000	0,000	0,000	0,000	0,000	0,000	0,000	0,000
Primary Maintenance Facility	2033	Site Preparation	Worker Commute	0	0,000	0,000	0,000	0,000	0,000	0,000	0,000	0,000	0,000	0,000	0,000	0,000	0,000	0,000	0,000	0,000	0,000	0,000	0,000	0,000	0,000	0,000	0,000
Stockpile Relocation	2033	Site Preparation	Worker Commute	0	0,000	0,000	0,000	0,000	0,000	0,000	0,000	0,000	0,000	0,000	0,000	0,000	0,000	0,000	0,000	0,000	0,000	0,000	0,000	0,000	0,000	0,000	0,000
Public Area	2024	Grading	Worker Commute	0	0,000	0,000	0,000	0,000	0,000	0,000	0,000	0,000	0,000	0,000	0,000	0,000	0,000	0,000	0,000	0,000	0,000	0,000	0,000	0,000	0,000	0,000	0,000
Public Area - SW Pond	2024	Grading	Worker Commute	0	0,000	0,000	0,000	0,000	0,000	0,000	0,000	0,000	0,000	0,000	0,000	0,000	0,000	0,000	0,000	0,000	0,000	0,000	0,000	0,000	0,000	0,000	0,000
Western Entrance	2024	Grading	Worker Commute	0	0,000	0,000	0,000	0,000	0,000	0,000	0,000	0,000	0,000	0,000	0,000	0,000	0,000	0,000	0,000	0,000	0,000	0,000	0,000	0,000	0,000	0,000	0,000
Shared Site Utilities	2024	Grading	Worker Commute	0	0,000	0,000	0,000	0,000	0,000	0,000	0,000	0,000	0,000	0,000	0,000	0,000	0,000	0,000	0,000	0,000	0,000	0,000	0,000	0,000	0,000	0,000	0,000
Compost Facility	2025	Grading	Worker Commute	0	0,000	0,000	0,000	0,000	0,000	0,000	0,000	0,000	0,000	0,000	0,000	0,000	0,000	0,000	0,000	0,000	0,000	0,000	0,000	0,000	0,000	0,000	0,000
Compost Facility - SW Pond	2025	Grading	Worker Commute	0	0,000	0,000	0,000	0,000	0,000	0,000	0,000	0,000	0,000	0,000	0,000	0,000	0,000	0,000	0,000	0,000	0,000	0,000	0,000	0,000	0,000	0,000	0,000
Landfill Construction3	2028	Grading	Worker Commute	0	0,000	0,000	0,000	0,000	0,000	0,000	0,000	0,000	0,000	0,000	0,000	0,000	0,000	0,000	0,000	0,000	0,000	0,000	0,000	0,000	0,000	0,000	0,000
Landfill Lining & Partial Closure4	2029	Grading	Worker Commute	0	0,000	0,000	0,000	0,000	0,000	0,000	0,000	0,000	0,000	0,000	0,000	0,000	0,000	0,000	0,000	0,000	0,000	0,000	0,000	0,000	0,000	0,000	0,000
Recovered Materials Storage	2029	Grading	Worker Commute	0	0,000	0,000	0,000	0,000	0,000	0,000	0,000	0,000	0,000	0,000	0,000	0,000	0,000	0,000	0,000	0,000	0,000	0,000	0,000	0,000	0,000	0,000	0,000
HHW Storage	2029	Grading	Worker Commute	0	0,000	0,000	0,000	0,000	0,000	0,000	0,000	0,000	0,000	0,000	0,000	0,000	0,000	0,000	0,000	0,000	0,000	0,000	0,000	0,000	0,000	0,000	0,000
Primary Maintenance Facility	2033	Grading	Worker Commute	0	0,000	0,000	0,000	0,000	0,000	0,000	0,000	0,000	0,000	0,000	0,000	0,000	0,000	0,000	0,000	0,000	0,000	0,000	0,000	0,000	0,000	0,000	0,000
Stockpile Relocation	2033	Grading	Worker Commute	0	0,000	0,000	0,000	0,000	0,000	0,000	0,000	0,000	0,000	0,000	0,000	0,000	0,000	0,000	0,000	0,000	0,000	0,000	0,000	0,000	0,000	0,000	0,000
Public Area	2024	Building Construction	Worker Commute	0	0,000	0,000	0,000	0,000	0,000	0,000	0,000	0,000	0,000	0,000	0,000	0,000	0,000	0,000	0,000	0,000	0,000	0,000	0,000	0,000	0,000	0,000	0,000
Public Area - SW Pond	2024	Building Construction	Worker Commute	0	0,000	0,000	0,000	0,000	0,000	0,000	0,000	0,000	0,000	0,000	0,000	0,000	0,000	0,000	0,000	0,000	0,000	0,000	0,000	0,000	0,000	0,000	0,000
Western Entrance	2024	Building Construction	Worker Commute	0	0,000	0,000	0,000	0,000	0,000	0,000	0,000	0,000	0,000	0,000	0,000	0,000	0,000	0,000	0,000	0,000	0,000	0,000	0,000	0,000	0,000	0,000	0,000
Shared Site Utilities	2024	Building Construction	Worker Commute	0	0,000	0,000	0,000	0,000	0,000	0,000	0,000	0,000	0,000	0,000	0,000	0,000	0,000	0,000	0,000	0,000	0,000	0,000	0,000	0,000	0,000	0,000	0,000
Compost Facility	2025	Building Construction	Worker Commute	0	0,000	0,000	0,000	0,000	0,000	0,000	0,000	0,000	0,000	0,000	0,000	0,000	0,000	0,000	0,000	0,000	0,000	0,000	0,000	0,000	0,000	0,000	0,000
Compost Facility - SW Pond	2025	Building Construction	Worker Commute	0	0,000	0,000	0,000	0,000	0,000	0,000	0,000	0,000	0,000	0,000	0,000	0,000	0,000	0,000	0,000	0,000	0,000	0,000	0,000	0,000	0,000	0,000	0,000
Landfill Construction3	2028	Building Construction	Worker Commute	0	0,000	0,000	0,000	0,000	0,000	0,000	0,000	0,000	0,000	0,000	0,000	0,000	0,000	0,000	0,000	0,000	0,000	0,000	0,000	0,000	0,000	0,000	0,000
Landfill Lining & Partial Closure4	2029	Building Construction	Worker Commute	0	0,000	0,000	0,000	0,000	0,000	0,000	0,000	0,000	0,000	0,000	0,000	0,000	0,000	0,000	0,000	0,000	0,000	0,000	0,000	0,000	0,000	0,000	0,000
Recovered Materials Storage	2029	Building Construction	Worker Commute	0	0,000	0,000	0,000	0,000	0,000	0,000	0,000	0,000	0,000	0,000	0,000	0,000	0,000	0,000	0,000	0,000	0,000	0,000	0,000	0,000	0,000	0,000	0,000
HHW Storage	2029	Building Construction	Worker Commute	0	0,000	0,000	0,000	0,000	0,000	0,000	0,000	0,000	0,000	0,000	0,000	0,000	0,000	0,000	0,000	0,000	0,000	0,000	0,000	0,000	0,000	0,000	0,000
Primary Maintenance Facility	2033	Building Construction	Worker Commute	0	0,000	0,000	0,000	0,000	0,000	0,000	0,000	0,000	0,000	0,000	0,000	0,000	0,000	0,000	0,000	0,000	0,000	0,000	0,000	0,000	0,000	0,000	0,000
Stockpile Relocation	2033	Building Construction	Worker Commute	0	0,000	0,000	0,000	0,000	0,000	0,000	0,000	0,000	0,000	0,000	0,000	0,000	0,000	0,000	0,000	0,000	0,000	0,000	0,000	0,000	0,000	0,000	0,000
Public Area	2024	Paving - Asphalt	Worker Commute	0	0,000	0,000	0,000	0,000	0,000	0,000	0,000	0,000	0,000	0,000	0,000	0,000	0,000	0,000	0,000	0,000	0,000	0,000	0,000	0,000	0,000	0,000	0,000
Public Area - SW Pond	2024	Paving - Asphalt	Worker Commute	0	0,000	0,000	0,000	0,000	0,000	0,000	0,000	0,000	0,000	0,000	0,000	0,000	0,000	0,000	0,000	0,000	0,000	0,000	0,000	0,000	0,000	0,000	0,000
Western Entrance	2024	Paving - Asphalt	Worker Commute	0	0,000	0,000	0,000	0,000	0,000	0,000	0,000	0,000	0,000	0,000	0,000	0,000	0,000	0,000	0,000	0,000	0,000	0,000	0,000	0,000	0,000	0,000	0,000
Shared Site Utilities	2024	Paving - Asphalt	Worker Commute	0	0,000	0,000	0,000	0,000	0,000	0,000	0,000	0,000	0,000	0,000	0,000	0,000	0,000	0,000	0,000	0,000	0,000	0,000	0,000	0,000	0,000	0,000	0,000
Compost Facility	2025	Paving - Asphalt	Worker Commute	0	0,000	0,000	0,000	0,000	0,000	0,000	0,000	0,000	0,000	0,000	0,000	0,000	0,000	0,000	0,000	0,000	0,000	0,000	0,000	0,000	0,000	0,000	0,000
Compost Facility - SW Pond	2025	Paving - Asphalt	Worker Commute	0	0,000	0,000	0,000	0,000	0,000	0,000	0,000	0,000	0,000	0,000	0,000	0,000	0,000	0,000	0,000	0,000	0,000	0,000	0,000	0,000	0,000	0,000	0,000
Landfill Construction3	2028	Paving - Asphalt	Worker Commute	0	0,000	0,000	0,000	0,000	0,000	0,000	0,000	0,000	0,000	0,000	0,000	0,000	0,000	0,000	0,000	0,000	0,000	0,000	0,000	0,000	0,000	0,000	0,000
Landfill Lining & Partial Closure4	2029	Paving - Asphalt	Worker Commute	0	0,000	0,000	0,000	0,000	0,000	0,000	0,000	0,000	0,000	0,000	0,000	0,000	0,000	0,000	0,000	0,000	0,000	0,000	0,000	0,000	0,000	0,000	0,000
Recovered Materials Storage	2029	Paving - Asphalt	Worker Commute	0	0,000	0,000	0,000	0,000	0,000	0,000	0,000	0,000	0,000	0,000	0,000	0,000	0,000	0,000	0,000	0,000	0,000	0,000	0,000	0,000	0,000	0,000	0,000
HHW Storage	2029	Paving - Asphalt	Worker Commute	0	0,000	0,000	0,000	0,000	0,000	0,000	0,000	0,000	0,000	0,000	0,000	0,000	0,000	0,000	0,000	0,000	0,000	0,000	0,000	0,000	0,000	0,000	0,000
Primary Maintenance Facility	2033	Paving - Asphalt	Worker Commute	0	0,000	0,000	0,000	0,000	0,000	0,000	0,000	0,000	0,000	0,000	0,000	0,000	0,000	0,000	0,000	0,000	0,000	0,000	0,000	0,000	0,000	0,000	0,000
Stockpile Relocation	2033	Paving - Asphalt	Worker Commute	0	0,000	0,000	0,000	0,000	0,000	0,000	0,000	0,000	0,000	0,000	0,000	0,000	0,000	0,000	0,000	0,000	0,000	0,000	0,000	0,000	0,000	0,000	0,000
Public Area	2024	Paving - Concrete	Worker Commute	0	0,000	0,000	0,000	0,000	0,000	0,000	0,000	0,000	0,000	0,000	0,000	0,000	0,000	0,000	0,000	0,000	0,000	0,000	0,000	0,000	0,000	0,000	0,000
Public Area - SW Pond	2024	Paving - Concrete	Worker Commute	0	0,000	0,000	0,000	0,000	0,000	0,000	0,000	0,000	0,000	0,000	0,000	0,000	0,000	0,000	0,000	0,000	0,000	0,000	0,000	0,000	0,000	0,000	0,000
Western Entrance	2024	Paving - Concrete	Worker Commute	0	0,000	0,000	0,000	0,000	0,000	0,000	0,000	0,000	0,000	0,000	0,000	0,000	0,000	0,000	0,000	0,000	0,000	0,000	0,000	0,000	0,000	0,000	0,000
Shared Site Utilities	2024	Paving - Concrete	Worker Commute	0	0,000	0,000	0,000	0,000	0,000	0,000	0,000	0,000	0,000	0,000	0,000	0,000	0,000	0,000	0,000	0,000	0,000	0,000	0,000	0,000	0,000	0,000	0,000
Compost Facility	2025	Paving - Concrete	Worker Commute	0	0,000	0,000	0,000	0,000	0,000	0,000	0,000	0,000	0,000	0,000	0,000	0,000	0,000	0,000	0,000	0,000	0,000	0,000	0,000	0,000	0,000	0,000	0,000
Compost Facility - SW Pond	2025	Paving - Concrete	Worker Commute	0	0,000	0,000	0,000	0,000	0,000	0,000	0,000	0,000	0,000	0,000	0,000	0,000	0,000	0,000	0,000	0,000	0,000	0,000	0,000	0,000	0,000	0,000	0,000
Landfill Construction3	2028	Paving - Concrete	Worker Commute	0	0,000	0,000	0,000	0,000	0,000	0,000	0,000	0,000	0,000	0,000	0,000	0,000	0,000	0,000	0,000	0,000	0,000	0,000	0,000	0,000	0,000	0,000	0,000
Landfill Lining & Partial Closure4	2029	Paving - Concrete	Worker Commute	0	0,000	0,000	0,000	0,000	0,000	0,000	0,000	0,000	0,000	0,000	0,000	0,000	0,000	0,000	0,000	0,000	0,000	0,000	0,000	0,000	0,000	0,000	0,000
Recovered Materials Storage	2029	Paving - Concrete	Worker Commute	0	0,000	0,000	0,000	0,000	0,000	0,000	0,000	0,000	0,000	0,000	0,000	0,000	0,000	0,000	0,000	0,000	0,000	0,000	0,000	0,000	0,000	0,000	0,000
HHW Storage	2029	Paving - Concrete	Worker Commute	0	0,000	0,000	0,000	0,000	0,000	0,000	0,000	0,000	0,000	0,000	0,000	0,000	0,000	0,000	0,000	0,000	0,000	0,000	0,000	0,000	0,000	0,000	0,000
Primary Maintenance Facility	2033	Paving - Concrete	Worker Commute	0	0,000	0,000	0,000	0,000	0,000	0,000	0,000	0,000	0,000	0,000	0,000	0,000	0,000	0,000	0,000	0,000	0,000	0,000	0,000	0,000	0,000	0,000	0,000
Stockpile Relocation	2033	Paving - Concrete	Worker Commute	0	0,000	0,000	0,000	0,000	0,000	0,000	0,000	0,000	0,000	0,000	0,000	0,000	0,000	0,000	0,000	0,000	0,000	0,000	0,000	0,000	0,000	0,000	0,000
Public Area	2024	Site Preparation - Pond	Worker Commute	0	0,000	0,000	0,000	0,000	0,000	0,000	0,000	0,000	0,000	0,000	0,000	0,000	0,000	0,000	0,000	0,000	0,000	0,000	0,000	0,000	0,000	0,000	0,000
Public Area - SW Pond	2024	Site Preparation - Pond	Worker Commute	0	0,000	0,000	0,000	0,000	0,000	0,000	0,000	0,000	0,000	0,000	0,000	0,000	0,000	0,000	0,000	0,000	0,000	0,000	0,000	0,000	0,000	0,000	0,000
Western Entrance	2024	Site Preparation - Pond	Worker Commute	0	0,000	0,000	0,000	0,000	0,000	0,000	0,000	0,000	0,000	0,000	0,000	0,000	0,000	0,000	0,000	0,000	0,000	0,000	0,000	0,000	0,000	0,000	0,000
Shared Site Utilities	2024	Site Preparation - Pond	Worker Commute	0	0,000	0,000	0,000	0,000	0,000	0,000	0,000	0,000	0,000	0,000	0,000	0,000	0,000	0,000	0,000	0,000	0,000	0,000	0,000	0,000	0,000	0,000	0,000
Compost Facility	2025	Site Preparation - Pond	Worker Commute	0	0,000	0,000	0,000	0,000	0,000	0,000	0,000	0,000	0,000	0,000	0,000	0,000	0,000	0,000	0,000	0,000	0,000	0,000	0,000	0,000	0,000	0,000	0,000
Compost Facility - SW Pond	2025	Site Preparation - Pond	Worker Commute	0	0,000	0,000	0,000	0,000	0,000	0,000	0,000	0,000	0,000	0,000	0,000	0,000	0,000	0,000	0,000	0,000	0,000	0,000	0,000	0,000	0,000	0,000	0,000
Landfill Construction3	2028	Site Preparation - Pond	Worker Commute	0	0,000	0,000	0,000	0,000	0,000	0,000	0,000	0,000	0,000	0,000	0,000	0,000	0,000	0,000	0,000	0,000	0,000	0,000	0,000	0,000	0,000	0,000	0,000
Landfill Lining & Partial Closure4	2029	Site Preparation - Pond	Worker Commute	0	0,000	0,000	0,000	0,000	0,000	0,000	0,000	0,000	0,000	0,000	0,000	0,000	0,000	0,000	0,000	0,000	0,000	0,000	0,000	0,000	0,000	0,000	0,000
Recovered Materials Storage	2029	Site Preparation - Pond	Worker Commute	0	0,000	0,000	0,000	0,000	0,000	0,000	0,000	0,000	0,000	0,000	0,000	0,000	0,000	0,000	0,000	0,000	0,000	0,000	0,000	0,000	0,000	0,000	0,000
HHW Storage	2029	Site Preparation - Pond	Worker Commute	0	0,000	0,000	0,000	0,000	0,000	0,000	0,000	0,000	0,000	0,000	0,000	0,000	0,000	0,000	0,000	0,000	0,000	0,000	0,000	0,000	0,000	0,000	0,000
Primary Maintenance Facility	2033	Site Preparation - Pond	Worker Commute	0	0,000	0,000	0,000	0,000	0,000	0,000	0,000	0,000	0,000	0,000	0,000	0,000	0,000	0,000	0,000	0,000	0,000	0,000	0,000	0,000	0,000	0,000	0,000
Stockpile Relocation	2033	Site Preparation - Pond	Worker Commute	0	0,000	0,000	0,000	0,000	0,000	0,000	0,000	0,000	0,000	0,000	0,000	0,000	0,000	0,000	0,000	0,000	0,000	0,000	0,000	0,000	0,000	0,000	0,000
Public Area	2024	Excavation	Worker Commute	0	0,000	0,000	0,000	0,000	0,000	0,000	0,000	0,000	0,000	0,000	0,000	0,000	0,000	0,000	0,000	0,000	0,000	0,000	0,000	0,000	0,000	0,000	0,000
Public Area - SW Pond	2024	Excavation	Worker Commute	0	0,000	0,000	0,000	0,000	0,000	0,000	0,000	0,000	0,000	0,000	0,000	0,000	0,000	0,000	0,000	0,000	0,000	0,000	0,000	0,000	0,000	0,000	0,000
Western Entrance	2024	Excavation	Worker Commute	0	0,000	0,000	0,000	0,000	0,000	0,000	0,000	0,000	0,000	0,000	0,000	0,000	0,000	0,000	0,000	0,000	0,000	0,000	0,000	0,000	0,000	0,000	0,000
Shared Site Utilities	2024	Excavation	Worker Commute	0	0,000	0,000	0,000	0,000	0,000	0,000	0,000	0,000	0,000	0,000	0,000	0,000	0,000	0,000	0,000	0,000	0,000	0,000	0,000	0,000	0,000	0,000	0,000
Compost Facility	2025	Excavation	Worker Commute	0	0,000	0,000	0,000	0,000	0,000	0,000	0,000	0,000	0,000	0,000	0,000	0,000	0,000	0,000	0,000	0,000	0,000	0,000	0,000	0,000	0,000	0,000	0,000
Compost Facility - SW Pond	2025	Excavation	Worker Commute	0	0,000	0,000	0,000	0,000	0,000	0,000	0,000	0,000	0,000	0,000	0,000	0,000	0,000	0,000	0,000	0,000	0,000	0,000	0,000	0,000	0,000	0,000	0,000
Landfill Construction3	2028	Excavation	Worker Commute	0	0,000	0,000	0,000	0,000	0,000	0,000	0,000	0,000	0,000	0,000	0,000	0,000	0,000	0,000	0,000	0,000	0,000	0,000	0,000	0,000	0,000	0,000	0,000
Landfill Lining & Partial Closure4	2029	Excavation	Worker Commute	0	0,000	0,000	0,000	0,000	0,000	0,000	0,000	0,000	0,000	0,000	0,000	0,000	0,000	0,000	0,000	0,000	0,000	0,000	0,000	0,000	0,000	0,000	0,000

WPWMA EIR
Construction Onroad Emissions
Plan Concept 1

Recovered Materials Storage	2029	Excavation	Worker Commute	0	0,000	0,000	0,000	0,000	0,000	0,000	0,000	0,000	0,000	0,000	0,000	0,000	0,000	0,000	0,000	0,000	0,000	0,000	0,000	0,000	0,000	0,000	0,000
HHW Storage	2029	Excavation	Worker Commute	0	0,000	0,000	0,000	0,000	0,000	0,000	0,000	0,000	0,000	0,000	0,000	0,000	0,000	0,000	0,000	0,000	0,000	0,000	0,000	0,000	0,000	0,000	0,000
Primary Maintenance Facility	2033	Excavation	Worker Commute	0	0,000	0,000	0,000	0,000	0,000	0,000	0,000	0,000	0,000	0,000	0,000	0,000	0,000	0,000	0,000	0,000	0,000	0,000	0,000	0,000	0,000	0,000	0,000
Stockpile Relocation	2033	Excavation	Worker Commute	0	0,000	0,000	0,000	0,000	0,000	0,000	0,000	0,000	0,000	0,000	0,000	0,000	0,000	0,000	0,000	0,000	0,000	0,000	0,000	0,000	0,000	0,000	0,000
Public Area	2024	Lining and Partial Closure	Worker Commute	0	0,000	0,000	0,000	0,000	0,000	0,000	0,000	0,000	0,000	0,000	0,000	0,000	0,000	0,000	0,000	0,000	0,000	0,000	0,000	0,000	0,000	0,000	0,000
Public Area - SW Pond	2024	Lining and Partial Closure	Worker Commute	0	0,000	0,000	0,000	0,000	0,000	0,000	0,000	0,000	0,000	0,000	0,000	0,000	0,000	0,000	0,000	0,000	0,000	0,000	0,000	0,000	0,000	0,000	0,000
Western Entrance	2024	Lining and Partial Closure	Worker Commute	0	0,000	0,000	0,000	0,000	0,000	0,000	0,000	0,000	0,000	0,000	0,000	0,000	0,000	0,000	0,000	0,000	0,000	0,000	0,000	0,000	0,000	0,000	0,000
Shared Site Utilities	2024	Lining and Partial Closure	Worker Commute	0	0,000	0,000	0,000	0,000	0,000	0,000	0,000	0,000	0,000	0,000	0,000	0,000	0,000	0,000	0,000	0,000	0,000	0,000	0,000	0,000	0,000	0,000	0,000
Compost Facility	2025	Lining and Partial Closure	Worker Commute	0	0,000	0,000	0,000	0,000	0,000	0,000	0,000	0,000	0,000	0,000	0,000	0,000	0,000	0,000	0,000	0,000	0,000	0,000	0,000	0,000	0,000	0,000	0,000
Compost Facility - SW Pond	2025	Lining and Partial Closure	Worker Commute	0	0,000	0,000	0,000	0,000	0,000	0,000	0,000	0,000	0,000	0,000	0,000	0,000	0,000	0,000	0,000	0,000	0,000	0,000	0,000	0,000	0,000	0,000	0,000
Landfill Construction3	2028	Lining and Partial Closure	Worker Commute	0	0,000	0,000	0,000	0,000	0,000	0,000	0,000	0,000	0,000	0,000	0,000	0,000	0,000	0,000	0,000	0,000	0,000	0,000	0,000	0,000	0,000	0,000	0,000
Landfill Lining & Partial Closure4	2029	Lining and Partial Closure	Worker Commute	0	0,000	0,000	0,000	0,000	0,000	0,000	0,000	0,000	0,000	0,000	0,000	0,000	0,000	0,000	0,000	0,000	0,000	0,000	0,000	0,000	0,000	0,000	0,000
Recovered Materials Storage	2029	Lining and Partial Closure	Worker Commute	0	0,000	0,000	0,000	0,000	0,000	0,000	0,000	0,000	0,000	0,000	0,000	0,000	0,000	0,000	0,000	0,000	0,000	0,000	0,000	0,000	0,000	0,000	0,000
HHW Storage	2029	Lining and Partial Closure	Worker Commute	0	0,000	0,000	0,000	0,000	0,000	0,000	0,000	0,000	0,000	0,000	0,000	0,000	0,000	0,000	0,000	0,000	0,000	0,000	0,000	0,000	0,000	0,000	0,000
Primary Maintenance Facility	2033	Lining and Partial Closure	Worker Commute	0	0,000	0,000	0,000	0,000	0,000	0,000	0,000	0,000	0,000	0,000	0,000	0,000	0,000	0,000	0,000	0,000	0,000	0,000	0,000	0,000	0,000	0,000	0,000
Stockpile Relocation	2033	Lining and Partial Closure	Worker Commute	0	0,000	0,000	0,000	0,000	0,000	0,000	0,000	0,000	0,000	0,000	0,000	0,000	0,000	0,000	0,000	0,000	0,000	0,000	0,000	0,000	0,000	0,000	0,000
Public Area	2024	Stockpile Movement	Worker Commute	0	0,000	0,000	0,000	0,000	0,000	0,000	0,000	0,000	0,000	0,000	0,000	0,000	0,000	0,000	0,000	0,000	0,000	0,000	0,000	0,000	0,000	0,000	0,000
Public Area - SW Pond	2024	Stockpile Movement	Worker Commute	0	0,000	0,000	0,000	0,000	0,000	0,000	0,000	0,000	0,000	0,000	0,000	0,000	0,000	0,000	0,000	0,000	0,000	0,000	0,000	0,000	0,000	0,000	0,000
Western Entrance	2024	Stockpile Movement	Worker Commute	0	0,000	0,000	0,000	0,000	0,000	0,000	0,000	0,000	0,000	0,000	0,000	0,000	0,000	0,000	0,000	0,000	0,000	0,000	0,000	0,000	0,000	0,000	0,000
Shared Site Utilities	2024	Stockpile Movement	Worker Commute	0	0,000	0,000	0,000	0,000	0,000	0,000	0,000	0,000	0,000	0,000	0,000	0,000	0,000	0,000	0,000	0,000	0,000	0,000	0,000	0,000	0,000	0,000	0,000
Compost Facility	2025	Stockpile Movement	Worker Commute	0	0,000	0,000	0,000	0,000	0,000	0,000	0,000	0,000	0,000	0,000	0,000	0,000	0,000	0,000	0,000	0,000	0,000	0,000	0,000	0,000	0,000	0,000	0,000
Compost Facility - SW Pond	2025	Stockpile Movement	Worker Commute	0	0,000	0,000	0,000	0,000	0,000	0,000	0,000	0,000	0,000	0,000	0,000	0,000	0,000	0,000	0,000	0,000	0,000	0,000	0,000	0,000	0,000	0,000	0,000
Landfill Construction3	2028	Stockpile Movement	Worker Commute	0	0,000	0,000	0,000	0,000	0,000	0,000	0,000	0,000	0,000	0,000	0,000	0,000	0,000	0,000	0,000	0,000	0,000	0,000	0,000	0,000	0,000	0,000	0,000
Landfill Lining & Partial Closure4	2029	Stockpile Movement	Worker Commute	0	0,000	0,000	0,000	0,000	0,000	0,000	0,000	0,000	0,000	0,000	0,000	0,000	0,000	0,000	0,000	0,000	0,000	0,000	0,000	0,000	0,000	0,000	0,000
Recovered Materials Storage	2029	Stockpile Movement	Worker Commute	0	0,000	0,000	0,000	0,000	0,000	0,000	0,000	0,000	0,000	0,000	0,000	0,000	0,000	0,000	0,000	0,000	0,000	0,000	0,000	0,000	0,000	0,000	0,000
HHW Storage	2029	Stockpile Movement	Worker Commute	0	0,000	0,000	0,000	0,000	0,000	0,000	0,000	0,000	0,000	0,000	0,000	0,000	0,000	0,000	0,000	0,000	0,000	0,000	0,000	0,000	0,000	0,000	0,000
Primary Maintenance Facility	2033	Stockpile Movement	Worker Commute	0	0,000	0,000	0,000	0,000	0,000	0,000	0,000	0,000	0,000	0,000	0,000	0,000	0,000	0,000	0,000	0,000	0,000	0,000	0,000	0,000	0,000	0,000	0,000
Stockpile Relocation	2033	Stockpile Movement	Worker Commute	0	0,000	0,000	0,000	0,000	0,000	0,000	0,000	0,000	0,000	0,000	0,000	0,000	0,000	0,000	0,000	0,000	0,000	0,000	0,000	0,000	0,000	0,000	0,000
Public Area	2024	Demolition	Vendor/Material Hauling	0	0,000	0,000	0,000	0,000	0,000	0,000	0,000	0,000	0,000	0,000	0,000	0,000	0,000	0,000	0,000	0,000	0,000	0,000	0,000	0,000	0,000	0,000	0,000
Public Area - SW Pond	2024	Demolition	Vendor/Material Hauling	0	0,000	0,000	0,000	0,000	0,000	0,000	0,000	0,000	0,000	0,000	0,000	0,000	0,000	0,000	0,000	0,000	0,000	0,000	0,000	0,000	0,000	0,000	0,000
Western Entrance	2024	Demolition	Vendor/Material Hauling	0	0,000	0,000	0,000	0,000	0,000	0,000	0,000	0,000	0,000	0,000	0,000	0,000	0,000	0,000	0,000	0,000	0,000	0,000	0,000	0,000	0,000	0,000	0,000
Shared Site Utilities	2024	Demolition	Vendor/Material Hauling	0	0,000	0,000	0,000	0,000	0,000	0,000	0,000	0,000	0,000	0,000	0,000	0,000	0,000	0,000	0,000	0,000	0,000	0,000	0,000	0,000	0,000	0,000	0,000
Compost Facility	2025	Demolition	Vendor/Material Hauling	0	0,000	0,000	0,000	0,000	0,000	0,000	0,000	0,000	0,000	0,000	0,000	0,000	0,000	0,000	0,000	0,000	0,000	0,000	0,000	0,000	0,000	0,000	0,000
Compost Facility - SW Pond	2025	Demolition	Vendor/Material Hauling	0	0,000	0,000	0,000	0,000	0,000	0,000	0,000	0,000	0,000	0,000	0,000	0,000	0,000	0,000	0,000	0,000	0,000	0,000	0,000	0,000	0,000	0,000	0,000
Landfill Construction3	2028	Demolition	Vendor/Material Hauling	0	0,000	0,000	0,000	0,000	0,000	0,000	0,000	0,000	0,000	0,000	0,000	0,000	0,000	0,000	0,000	0,000	0,000	0,000	0,000	0,000	0,000	0,000	0,000
Landfill Lining & Partial Closure4	2029	Demolition	Vendor/Material Hauling	0	0,000	0,000	0,000	0,000	0,000	0,000	0,000	0,000	0,000	0,000	0,000	0,000	0,000	0,000	0,000	0,000	0,000	0,000	0,000	0,000	0,000	0,000	0,000
Recovered Materials Storage	2029	Demolition	Vendor/Material Hauling	0	0,000	0,000	0,000	0,000	0,000	0,000	0,000	0,000	0,000	0,000	0,000	0,000	0,000	0,000	0,000	0,000	0,000	0,000	0,000	0,000	0,000	0,000	0,000
HHW Storage	2029	Demolition	Vendor/Material Hauling	0	0,000	0,000	0,000	0,000	0,000	0,000	0,000	0,000	0,000	0,000	0,000	0,000	0,000	0,000	0,000	0,000	0,000	0,000	0,000	0,000	0,000	0,000	0,000
Primary Maintenance Facility	2033	Demolition	Vendor/Material Hauling	0	0,000	0,000	0,000	0,000	0,000	0,000	0,000	0,000	0,000	0,000	0,000	0,000	0,000	0,000	0,000	0,000	0,000	0,000	0,000	0,000	0,000	0,000	0,000
Stockpile Relocation	2033	Demolition	Vendor/Material Hauling	0	0,000	0,000	0,000	0,000	0,000	0,000	0,000	0,000	0,000	0,000	0,000	0,000	0,000	0,000	0,000	0,000	0,000	0,000	0,000	0,000	0,000	0,000	0,000
Public Area	2024	Site Preparation	Vendor/Material Hauling	0	0,000	0,000	0,000	0,000	0,000	0,000	0,000	0,000	0,000	0,000	0,000	0,000	0,000	0,000	0,000	0,000	0,000	0,000	0,000	0,000	0,000	0,000	0,000
Public Area - SW Pond	2024	Site Preparation	Vendor/Material Hauling	0	0,000	0,000	0,000	0,000	0,000	0,000	0,000	0,000	0,000	0,000	0,000	0,000	0,000	0,000	0,000	0,000	0,000	0,000	0,000	0,000	0,000	0,000	0,000
Western Entrance	2024	Site Preparation	Vendor/Material Hauling	0	0,000	0,000	0,000	0,000	0,000	0,000	0,000	0,000	0,000	0,000	0,000	0,000	0,000	0,000	0,000	0,000	0,000	0,000	0,000	0,000	0,000	0,000	0,000
Shared Site Utilities	2024	Site Preparation	Vendor/Material Hauling	0	0,000	0,000	0,000	0,000	0,000	0,000	0,000	0,000	0,000	0,000	0,000	0,000	0,000	0,000	0,000	0,000	0,000	0,000	0,000	0,000	0,000	0,000	0,000
Compost Facility	2025	Site Preparation	Vendor/Material Hauling	0	0,000	0,000	0,000	0,000	0,000	0,000	0,000	0,000	0,000	0,000	0,000	0,000	0,000	0,000	0,000	0,000	0,000	0,000	0,000	0,000	0,000	0,000	0,000
Compost Facility - SW Pond	2025	Site Preparation	Vendor/Material Hauling	0	0,000	0,000	0,000	0,000	0,000	0,000	0,000	0,000	0,000	0,000	0,000	0,000	0,000	0,000	0,000	0,000	0,000	0,000	0,000	0,000	0,000	0,000	0,000
Landfill Construction3	2028	Site Preparation	Vendor/Material Hauling	0	0,000	0,000	0,000	0,000	0,000	0,000	0,000	0,000	0,000	0,000	0,000	0,000	0,000	0,000	0,000	0,000	0,000	0,000	0,000	0,000	0,000	0,000	0,000
Landfill Lining & Partial Closure4	2029	Site Preparation	Vendor/Material Hauling	0	0,000	0,000	0,000	0,000	0,000	0,000	0,000	0,000	0,000	0,000	0,000	0,000	0,000	0,000	0,000	0,000	0,000	0,000	0,000	0,000	0,000	0,000	0,000
Recovered Materials Storage	2029	Site Preparation	Vendor/Material Hauling	0	0,000	0,000	0,000	0,000	0,000	0,000	0,000	0,000	0,000	0,000	0,000	0,000	0,000	0,000	0,000	0,000	0,000	0,000	0,000	0,000	0,000	0,000	0,000
HHW Storage	2029	Site Preparation	Vendor/Material Hauling	0	0,000	0,000	0,000	0,000	0,000	0,000	0,000	0,000	0,000	0,000	0,000	0,000	0,000	0,000	0,000	0,000	0,000	0,000	0,000	0,000	0,000	0,000	0,000
Primary Maintenance Facility	2033	Site Preparation	Vendor/Material Hauling	0	0,000	0,000	0,000	0,000	0,000	0,000	0,000	0,000	0,000	0,000	0,000	0,000	0,000	0,000	0,000	0,000	0,000	0,000	0,000	0,000	0,000	0,000	0,000
Stockpile Relocation	2033	Site Preparation	Vendor/Material Hauling	0	0,000	0,000	0,000	0,000	0,000	0,000	0,000	0,000	0,000	0,000	0,000	0,000	0,000	0,000	0,000	0,000	0,000	0,000	0,000	0,000	0,000	0,000	0,000
Public Area	2024	Grading	Vendor/Material Hauling	0	0,000	0,000	0,000	0,000	0,000	0,000	0,000	0,000	0,000	0,000	0,000	0,000	0,000	0,000	0,000	0,000	0,000	0,000	0,000	0,000	0,000	0,000	0,000
Public Area - SW Pond	2024	Grading	Vendor/Material Hauling	0	0,000	0,000	0,000	0,000	0,000	0,000	0,000	0,000	0,000	0,000	0,000	0,000	0,000	0,000	0,000	0,000	0,000	0,000	0,000	0,000	0,000	0,000	0,000
Western Entrance	2024	Grading	Vendor/Material Hauling	0	0,000	0,000	0,000	0,000	0,000	0,000	0,000	0,000	0,000	0,000	0,000	0,000	0,000	0,000	0,000	0,000	0,000	0,000	0,000	0,000	0,000	0,000	0,000
Shared Site Utilities	2024	Grading	Vendor/Material Hauling	0	0,000	0,000	0,000	0,000	0,000	0,000	0,000	0,000	0,000	0,000	0,000	0,000	0,000	0,000	0,000	0,000	0,000	0,000	0,000	0,000	0,000	0,000	0,000
Compost Facility	2025	Grading	Vendor/Material Hauling	0	0,000	0,000	0,000	0,000	0,000	0,000	0,000	0,000	0,000	0,000	0,000	0,000	0,000	0,000	0,000	0,000	0,000	0,000	0,000	0,000	0,000	0,000	0,000
Compost Facility - SW Pond	2025	Grading	Vendor/Material Hauling	0	0,000	0,000	0,000	0,000	0,000	0,000	0,000	0,000	0,000	0,000	0,000	0,000	0,000	0,000	0,000	0,000	0,000	0,000	0,000	0,000	0,000	0,000	0,000
Landfill Construction3	2028	Grading	Vendor/Material Hauling	0	0,000	0,000	0,000	0,000	0,000	0,000	0,000	0,000	0,000	0,000	0,000	0,000	0,000	0,000	0,000	0,000	0,000	0,000	0,000	0,000	0,000	0,000	0,000
Landfill Lining & Partial Closure4	2029	Grading	Vendor/Material Hauling	0	0,000	0,000	0,000	0,000	0,000	0,000	0,000	0,000	0,000	0,000	0,000	0,000	0,000	0,000	0,000	0,000	0,000	0,000	0,000	0,000	0,000	0,000	0,000
Recovered Materials Storage	2029	Grading	Vendor/Material Hauling	0	0,000	0,000	0,000	0,000	0,000	0,000	0,000	0,000	0,000	0,000	0,000	0,000	0,000	0,000	0,000	0,000	0,000	0,000	0,000	0,000	0,000	0,000	0,000
HHW Storage	2029	Grading	Vendor/Material Hauling	0	0,000	0,000	0,000	0,000	0,000	0,000	0,000	0,000	0,000	0,000	0,000	0,000	0,000	0,000	0,000	0,000	0,000	0,000	0,000	0,000	0,000	0,000	0,000
Primary Maintenance Facility	2033	Grading	Vendor/Material Hauling	0	0,000	0,000	0,000	0,000	0,000	0,000	0,000	0,000	0,000	0,000	0,000	0,000	0,000	0,000	0,000	0,000	0,000	0,000	0,000	0,000	0,000	0,000	0,000
Stockpile Relocation	2033	Grading	Vendor/Material Hauling	0	0,000	0,000	0,000	0,000	0,000	0,000	0,000	0,000	0,000	0,000	0,000	0,000	0,000	0,000	0,000	0,000	0,000	0,000	0,000	0,000	0,000	0,000	0,000
Public Area	2024	Building Construction	Vendor/Material Hauling	0	0,000	0,000	0,000	0,000	0,000	0,000	0,000	0,000	0,000	0,000	0,000	0,000	0,000	0,000	0,000	0,000	0,000	0,000	0,000	0,000	0,000	0,000	0,000
Public Area - SW Pond	2024	Building Construction	Vendor/Material Hauling	0	0,000	0,000	0,000	0,000	0,000	0,000	0,000	0,000	0,000	0,000	0,000	0,000	0,000	0,000	0,000	0,000	0,000	0,000	0,000	0,000	0,000	0,000	0,000
Western Entrance	2024	Building Construction	Vendor/Material Hauling	0	0,000	0,000	0,000	0,000	0,000	0,000	0,000	0,000	0,000	0,000	0,000	0,000	0,000	0,000	0,000	0,000	0,000	0,000	0,000	0,000	0,000	0,000	0,000
Shared Site Utilities	2024	Building Construction	Vendor/Material Hauling	0	0,000	0,000	0,000	0,000	0,000	0,000	0,000	0,000	0,000	0,000	0,000	0,000	0,000	0,000	0,000	0,000	0,000	0,000	0,000	0,000	0,000	0,000	0,000
Compost Facility	2025	Building Construction	Vendor/Material Hauling	0	0,000	0,000	0,000	0,000	0,000	0,000	0,000	0,000	0,000	0,000	0,000	0,000	0,000	0,000	0,000	0,000	0,000	0,000	0,000	0,000	0,000	0,000	0,000
Compost Facility - SW Pond	2025	Building Construction	Vendor/Material Hauling	0	0,000	0,000	0,000	0,000	0,000	0,000	0,000	0,000	0,000	0,000	0,000	0,000	0,000	0,000	0,000	0,000	0,000	0,000	0,000	0,000	0,000	0,000	0,000
Landfill Construction3	2028	Building Construction	Vendor/Material Hauling	0	0,000	0,000	0,000	0,000	0,000	0,000	0,000	0,000	0,000	0,000	0,000	0,000	0,000	0,000	0,000	0,000	0,000	0,000	0,000	0,000	0,000	0,000	0,000
Landfill Lining & Partial Closure4	2029	Building Construction	Vendor/Material Hauling	0	0,000	0,000	0,000	0,000	0,000	0,000	0,000	0,000	0,000	0,000	0,000	0,000	0,000	0,000	0,000	0,000	0,000	0,000	0,000	0,000	0,000	0,000	0,000
Recovered Materials Storage	2029	Building Construction	Vendor/Material Hauling	0	0,000	0,000	0,000	0,000	0,000	0,000	0,000	0,000	0,000	0,000	0,000	0,000	0,000	0,000	0,000	0,000	0,000	0,000	0,000	0,000	0,000	0,000	0,000
HHW Storage	2029	Building Construction	Vendor/Material Hauling	0	0,000	0,000	0,000	0,000	0,000	0,000	0,000	0,000	0,000	0,000	0,000	0,000	0,000	0,000	0,000	0,000	0,000	0,000	0,000	0,000	0,000	0,000	0,000
Primary Maintenance Facility	2033	Building Construction	Vendor/Material Hauling	0	0,000	0,000	0,000	0,000	0,000	0,000	0,000	0,000	0,000	0,000	0,000	0,000	0,000	0,000	0,000	0,000	0,000	0,000	0,000	0,000	0,000	0,000	0,000
Stockpile Relocation	2033	Building Construction	Vendor/Material Hauling	0	0,000	0,000	0,000	0,000	0,000	0,000	0,000	0,000	0,000	0,000	0,000	0,000	0,000	0,000	0,000	0,000	0,000	0,000	0,000	0,000	0,000	0,000	0,000
Public Area	2024	Paving - Asphalt	Vendor/Material Hauling	0	0,000	0,000	0,000	0,000	0,000	0,000	0,000	0,000	0,000	0,000	0,000	0,000	0,000	0,000	0,000	0,000	0,000	0,000	0,000	0,000	0,000	0,000	0,000
Public Area - SW Pond	2024	Paving - Asphalt	Vendor/Material Hauling	0	0,000	0,000	0,000	0,000	0,000	0,000	0,000	0,000	0,000	0,000	0,000	0,000	0,000	0,000	0,000	0,000	0,000	0,000	0,000	0,000	0,000	0,000	0,000
Western Entrance	2024	Paving - Asphalt	Vendor/Material Hauling	0	0,000	0,000	0,000	0,000	0,000	0,000	0,000	0,000	0,000	0,000	0,000	0,000	0,000	0,000	0,000	0,000	0,000	0,000	0,000	0,000	0,000	0,000	0,000
Shared Site Utilities	2024	Paving - Asphalt	Vendor/Material Hauling	0	0,000	0,000	0,000	0,000	0,000	0,000	0,000	0,000	0,000	0,000	0,000	0,000	0,000	0,000	0,000	0,000	0,000	0,000	0,000	0,000	0,000	0,000	0,000
Compost Facility	2025	Paving - Asphalt	Vendor/Material Hauling	0	0,000	0,000	0,000	0,000	0,000	0,000	0,000	0,000	0,000	0,000	0,000	0,000	0,000	0,000	0,000	0,000	0,000	0,000	0,000	0,000	0,000	0,000	0,000
Compost Facility - SW Pond	2025	Paving - Asphalt	Vendor/Material Hauling	0	0,000	0,000	0,000	0,000	0,000	0,000	0,000	0,000	0,000	0,000	0,000	0,000	0,000	0,000	0,000	0,000	0,000	0,000	0,000	0,000	0,000	0,000	0,000
Landfill Construction3	2028	Paving - Asphalt	Vendor/Material Hauling	0	0,000	0,000	0,000	0,000	0,000	0,000	0,000	0,000	0,000	0,000	0,000	0,000	0,000	0,000	0,000	0,000	0,000	0,000	0,000	0,000	0,000	0,000	0,000
Landfill Lining & Partial Closure4	2029	Paving - Asphalt	Vendor/Material Hauling	0	0,000	0,000	0,000	0,000	0,000	0,000	0,000	0,000	0,000	0,000	0,000	0,000	0,000	0,000	0,000	0,000	0,000	0,000	0,000	0,000	0,000	0,000	0,000
Recovered Materials Storage	2029	Paving - Asphalt	Vendor/Material Hauling	0	0,000	0,000	0,000	0,000	0,000	0,000	0,000	0,000	0,000	0,000	0,000	0,000	0,000	0,000	0,000	0,000	0,000	0,000	0,000	0,000	0,000	0,000	0,000
HHW Storage	2029	Paving - Asphalt	Vendor/Material Hauling	0	0,000	0,000	0,000	0,000	0,000	0,000	0,000	0,000	0,000	0,000	0,000	0,000	0,000	0,000	0,000	0,000	0,000	0,000	0,000	0,000	0,000	0,000	0,000
Primary Maintenance Facility	2033	Paving - Asphalt	Vendor/Material Hauling	0	0,000	0,000	0,000	0,000	0,000	0,000	0,000	0,000	0,000	0,000	0,000	0,000	0,000	0,000	0,000	0,000	0,000	0,000	0,000	0,000	0,000	0,000	0,000
Stockpile Relocation	2033	Paving - Asphalt	Vendor/Material Hauling	0	0,000	0,000	0,000	0,000	0,000	0,000	0,000	0,000	0,000	0,000	0,000	0,000	0,000	0,000	0,000	0,000	0,000	0,000	0,000	0,000	0,000	0,000	0,000
Public Area	2024	Paving - Concrete	Vendor/Material Hauling	0	0,000	0,000	0,000	0,000	0,000	0,000	0,000	0,000	0,000	0,000	0,000	0,000	0,000	0,000	0,000	0,000	0,000	0,000	0,000	0,000	0,000	0,000	0,000
Public Area - SW Pond	2024	Paving - Concrete	Vendor/Material Hauling	0	0,000	0,000	0,000	0,000	0,000	0,000	0,000	0,000	0,000	0,000	0,000	0,000	0,000	0,000	0,000	0,000	0,000	0,000	0,000	0,000	0,000	0,000	0,000
Western Entrance	2024	Paving - Concrete	Vendor/Material Hauling	0	0,000	0,000	0,000	0,000	0,000	0,000	0,000	0,000	0,000	0,000	0,000	0,000	0,000	0,000	0,000	0,000	0,000	0,000	0,000	0,000	0,000	0,000	0,000
Shared Site Utilities	2024	Paving - Concrete	Vendor/Material Hauling	0	0,000	0,000	0,000	0,000	0,000	0,000	0,000	0,000	0,000	0,000	0,000	0,000	0,000	0,000	0,000	0,000	0,000	0,000	0,000	0,000	0,000	0,000	0,000
Compost Facility	2025	Paving - Concrete	Vendor/Material Hauling	0	0,000	0,000	0,000	0,000	0,000	0,000	0,000	0,000	0,000	0,000	0,000	0,000	0,000	0,000	0,000	0,000	0,000	0,000	0,000	0,000	0,000	0,000	0,000
Compost Facility - SW Pond	2025	Paving - Concrete	Vendor/Material Hauling	0	0,000	0,000	0,000	0,000	0,000	0,000	0,000	0,000	0,000	0,000	0,000	0,000	0,000	0,000	0,000	0,000	0,000	0,000	0,000	0,000	0,000	0,000	0,000
Landfill Construction3	2028	Paving - Concrete	Vendor/Material Hauling	0	0,000	0,000	0,000	0,000	0,000	0,000	0,000	0,000	0,000	0,000	0,000	0,000	0,000	0,000	0,000	0,000	0,000	0,000	0,000	0,000	0,000	0,000	0,000
Landfill Lining & Partial Closure4	2029	Paving - Concrete	Vendor/Material Hauling	0	0,000	0,000	0,000	0,000	0,000	0,000	0,000	0,000	0,000	0,000	0,000	0,000	0,000	0,000	0,000	0,000	0,000	0,000	0,000	0,000	0,000	0,000	0,000
Recovered Materials Storage	2029	Paving - Concrete	Vendor/Material Hauling	0	0,000	0,000	0,000	0,000	0,000	0,000	0,000	0,000	0,000	0,000	0,000	0,000	0,000	0,000	0,000	0,000	0,000	0,000	0,000	0,000	0,000	0,000	0,000
HHW Storage	2029	Paving - Concrete	Vendor/Material Hauling	0	0,000	0,000	0,000	0,000	0,000	0,000	0,000	0,000	0,000	0,000	0,000	0,000	0,000	0,000	0,000	0,000	0,000	0,000	0,000	0,000	0,000	0,000	0,000
Primary Maintenance Facility	2033	Paving - Concrete	Vendor/Material Hauling	0	0,000	0,000	0,000	0,000	0,000	0,000	0,000	0,000	0,000	0,000	0,000	0,000	0,000	0,000	0,000	0,000	0,000	0,000	0,000	0,000	0,000	0,000	0,000
Stockpile Relocation	2033	Paving - Concrete	Vendor/Material Hauling	0	0,000	0,000	0,000	0,000	0,000	0,000	0,000	0,000	0,000	0,000	0,000	0,000	0,000	0,000	0,000	0,000	0,000	0,000	0,000	0,000	0,000	0,000	0,000
Public Area	2024	Site Preparation - Pond	Vendor/Material Hauling	0	0,000	0,000	0,000	0,000	0,000	0,000	0,000	0,000	0,000	0,000	0,000	0,000	0,000	0,000	0,000	0,000	0,000	0,000	0,000	0,000	0,000	0,000	0,000
Public Area - SW Pond	2024	Site Preparation - Pond	Vendor/Material Hauling	0	0,000	0,000	0,000	0,000	0,000	0,000	0,000	0,000	0,000	0,000	0,000	0,000	0,000	0,000	0,000	0,000	0,000	0,000	0,000	0,000	0,000	0,000	0,000
Western Entrance	2024	Site Preparation - Pond	Vendor/Material Hauling	0	0,000	0,000	0,000	0,000	0,000	0,000	0,000	0,000	0,000	0,000	0,000	0,000	0,000	0,000	0,000	0,000	0,000	0,000	0,000	0,000	0,000	0,000	0,000
Shared Site Utilities	2024	Site Preparation - Pond	Vendor/Material Hauling	0	0,000	0,000	0,000	0,000	0,000	0,000	0,000	0,000	0,000	0,000	0,000	0,000	0,000	0,000	0,000	0,000	0,000	0,000	0,000	0,000	0,000	0,000	0,000
Compost Facility	2025	Site Preparation - Pond	Vendor/Material Hauling	0	0,000	0,000	0,000	0,000	0,000	0,000	0,000	0,000	0,000	0,000	0,000	0,000	0,000	0,000	0,000	0,000	0,000	0,000	0,000	0,000	0,000	0,000	0,000
Compost Facility - SW Pond	2025	Site Preparation - Pond	Vendor/Material Hauling	0	0,000	0,000	0,000	0,000	0,000	0,000	0,000	0,000	0,000	0,000	0,000	0,000	0,000	0,000	0,000	0,000	0,000	0,000	0,000	0,000	0,000	0,000	0,000
Landfill Construction3	2028	Site Preparation - Pond	Vendor/Material Hauling	0	0,000	0,000	0,000	0,000	0,000	0,000	0,000	0,000	0,000	0,000	0,000	0,000	0,000	0,000	0,000	0,000	0,000	0,000	0,000	0,000	0,000	0,000	0,000
Landfill Lining & Partial Closure4	2029	Site Preparation - Pond	Vendor/Material Hauling	0	0,000	0,000	0,000	0,000	0,000	0,000	0,000	0,000	0,000	0,000	0,000	0,000	0,000	0,000	0,000	0,000	0,000	0,000	0,000	0,000	0,000	0,000	0,000

WPWMA EIR
Construction Onroad Emissions
Plan Concept 1

Recovered Materials Storage	2029	Site Preparation - Pond	Vendor/Material Hauling	0	0,000	0,000	0,000	0,000	0,000	0,000	0,000	0,000	0,000	0,000	0,000	0,000	0,000	0,000	0,000	0,000	0,000	0,000	0,000	0,000	0,000	0,000	0,000	0,000	0,000
HHW Storage	2029	Site Preparation - Pond	Vendor/Material Hauling	0	0,000	0,000	0,000	0,000	0,000	0,000	0,000	0,000	0,000	0,000	0,000	0,000	0,000	0,000	0,000	0,000	0,000	0,000	0,000	0,000	0,000	0,000	0,000	0,000	0,000
Primary Maintenance Facility	2033	Site Preparation - Pond	Vendor/Material Hauling	0	0,000	0,000	0,000	0,000	0,000	0,000	0,000	0,000	0,000	0,000	0,000	0,000	0,000	0,000	0,000	0,000	0,000	0,000	0,000	0,000	0,000	0,000	0,000	0,000	0,000
Stockpile Relocation	2033	Site Preparation - Pond	Vendor/Material Hauling	0	0,000	0,000	0,000	0,000	0,000	0,000	0,000	0,000	0,000	0,000	0,000	0,000	0,000	0,000	0,000	0,000	0,000	0,000	0,000	0,000	0,000	0,000	0,000	0,000	0,000
Public Area	2024	Excavation	Vendor/Material Hauling	0	0,000	0,000	0,000	0,000	0,000	0,000	0,000	0,000	0,000	0,000	0,000	0,000	0,000	0,000	0,000	0,000	0,000	0,000	0,000	0,000	0,000	0,000	0,000	0,000	0,000
Public Area - SW Pond	2024	Excavation	Vendor/Material Hauling	0	0,000	0,000	0,000	0,000	0,000	0,000	0,000	0,000	0,000	0,000	0,000	0,000	0,000	0,000	0,000	0,000	0,000	0,000	0,000	0,000	0,000	0,000	0,000	0,000	0,000
Western Entrance	2024	Excavation	Vendor/Material Hauling	0	0,000	0,000	0,000	0,000	0,000	0,000	0,000	0,000	0,000	0,000	0,000	0,000	0,000	0,000	0,000	0,000	0,000	0,000	0,000	0,000	0,000	0,000	0,000	0,000	0,000
Shared Site Utilities	2024	Excavation	Vendor/Material Hauling	0	0,000	0,000	0,000	0,000	0,000	0,000	0,000	0,000	0,000	0,000	0,000	0,000	0,000	0,000	0,000	0,000	0,000	0,000	0,000	0,000	0,000	0,000	0,000	0,000	0,000
Compost Facility	2025	Excavation	Vendor/Material Hauling	0	0,000	0,000	0,000	0,000	0,000	0,000	0,000	0,000	0,000	0,000	0,000	0,000	0,000	0,000	0,000	0,000	0,000	0,000	0,000	0,000	0,000	0,000	0,000	0,000	0,000
Compost Facility - SW Pond	2025	Excavation	Vendor/Material Hauling	0	0,000	0,000	0,000	0,000	0,000	0,000	0,000	0,000	0,000	0,000	0,000	0,000	0,000	0,000	0,000	0,000	0,000	0,000	0,000	0,000	0,000	0,000	0,000	0,000	0,000
Landfill Construction3	2028	Excavation	Vendor/Material Hauling	0	0,000	0,000	0,000	0,000	0,000	0,000	0,000	0,000	0,000	0,000	0,000	0,000	0,000	0,000	0,000	0,000	0,000	0,000	0,000	0,000	0,000	0,000	0,000	0,000	0,000
Landfill Lining & Partial Closure4	2029	Excavation	Vendor/Material Hauling	0	0,000	0,000	0,000	0,000	0,000	0,000	0,000	0,000	0,000	0,000	0,000	0,000	0,000	0,000	0,000	0,000	0,000	0,000	0,000	0,000	0,000	0,000	0,000	0,000	0,000
Recovered Materials Storage	2029	Excavation	Vendor/Material Hauling	0	0,000	0,000	0,000	0,000	0,000	0,000	0,000	0,000	0,000	0,000	0,000	0,000	0,000	0,000	0,000	0,000	0,000	0,000	0,000	0,000	0,000	0,000	0,000	0,000	0,000
HHW Storage	2029	Excavation	Vendor/Material Hauling	0	0,000	0,000	0,000	0,000	0,000	0,000	0,000	0,000	0,000	0,000	0,000	0,000	0,000	0,000	0,000	0,000	0,000	0,000	0,000	0,000	0,000	0,000	0,000	0,000	0,000
Primary Maintenance Facility	2033	Excavation	Vendor/Material Hauling	0	0,000	0,000	0,000	0,000	0,000	0,000	0,000	0,000	0,000	0,000	0,000	0,000	0,000	0,000	0,000	0,000	0,000	0,000	0,000	0,000	0,000	0,000	0,000	0,000	0,000
Stockpile Relocation	2033	Excavation	Vendor/Material Hauling	0	0,000	0,000	0,000	0,000	0,000	0,000	0,000	0,000	0,000	0,000	0,000	0,000	0,000	0,000	0,000	0,000	0,000	0,000	0,000	0,000	0,000	0,000	0,000	0,000	0,000
Public Area	2024	Lining and Partial Closure	Vendor/Material Hauling	0	0,000	0,000	0,000	0,000	0,000	0,000	0,000	0,000	0,000	0,000	0,000	0,000	0,000	0,000	0,000	0,000	0,000	0,000	0,000	0,000	0,000	0,000	0,000	0,000	0,000
Public Area - SW Pond	2024	Lining and Partial Closure	Vendor/Material Hauling	0	0,000	0,000	0,000	0,000	0,000	0,000	0,000	0,000	0,000	0,000	0,000	0,000	0,000	0,000	0,000	0,000	0,000	0,000	0,000	0,000	0,000	0,000	0,000	0,000	0,000
Western Entrance	2024	Lining and Partial Closure	Vendor/Material Hauling	0	0,000	0,000	0,000	0,000	0,000	0,000	0,000	0,000	0,000	0,000	0,000	0,000	0,000	0,000	0,000	0,000	0,000	0,000	0,000	0,000	0,000	0,000	0,000	0,000	0,000
Shared Site Utilities	2024	Lining and Partial Closure	Vendor/Material Hauling	0	0,000	0,000	0,000	0,000	0,000	0,000	0,000	0,000	0,000	0,000	0,000	0,000	0,000	0,000	0,000	0,000	0,000	0,000	0,000	0,000	0,000	0,000	0,000	0,000	0,000
Compost Facility	2025	Lining and Partial Closure	Vendor/Material Hauling	0	0,000	0,000	0,000	0,000	0,000	0,000	0,000	0,000	0,000	0,000	0,000	0,000	0,000	0,000	0,000	0,000	0,000	0,000	0,000	0,000	0,000	0,000	0,000	0,000	0,000
Compost Facility - SW Pond	2025	Lining and Partial Closure	Vendor/Material Hauling	0	0,000	0,000	0,000	0,000	0,000	0,000	0,000	0,000	0,000	0,000	0,000	0,000	0,000	0,000	0,000	0,000	0,000	0,000	0,000	0,000	0,000	0,000	0,000	0,000	0,000
Landfill Construction3	2028	Lining and Partial Closure	Vendor/Material Hauling	0	0,000	0,000	0,000	0,000	0,000	0,000	0,000	0,000	0,000	0,000	0,000	0,000	0,000	0,000	0,000	0,000	0,000	0,000	0,000	0,000	0,000	0,000	0,000	0,000	0,000
Landfill Lining & Partial Closure4	2029	Lining and Partial Closure	Vendor/Material Hauling	0	0,000	0,000	0,000	0,000	0,000	0,000	0,000	0,000	0,000	0,000	0,000	0,000	0,000	0,000	0,000	0,000	0,000	0,000	0,000	0,000	0,000	0,000	0,000	0,000	0,000
Recovered Materials Storage	2029	Lining and Partial Closure	Vendor/Material Hauling	0	0,000	0,000	0,000	0,000	0,000	0,000	0,000	0,000	0,000	0,000	0,000	0,000	0,000	0,000	0,000	0,000	0,000	0,000	0,000	0,000	0,000	0,000	0,000	0,000	0,000
HHW Storage	2029	Lining and Partial Closure	Vendor/Material Hauling	0	0,000	0,000	0,000	0,000	0,000	0,000	0,000	0,000	0,000	0,000	0,000	0,000	0,000	0,000	0,000	0,000	0,000	0,000	0,000	0,000	0,000	0,000	0,000	0,000	0,000
Primary Maintenance Facility	2033	Lining and Partial Closure	Vendor/Material Hauling	0	0,000	0,000	0,000	0,000	0,000	0,000	0,000	0,000	0,000	0,000	0,000	0,000	0,000	0,000	0,000	0,000	0,000	0,000	0,000	0,000	0,000	0,000	0,000	0,000	0,000
Stockpile Relocation	2033	Lining and Partial Closure	Vendor/Material Hauling	0	0,000	0,000	0,000	0,000	0,000	0,000	0,000	0,000	0,000	0,000	0,000	0,000	0,000	0,000	0,000	0,000	0,000	0,000	0,000	0,000	0,000	0,000	0,000	0,000	0,000
Public Area	2024	Stockpile Movement	Vendor/Material Hauling	0	0,000	0,000	0,000	0,000	0,000	0,000	0,000	0,000	0,000	0,000	0,000	0,000	0,000	0,000	0,000	0,000	0,000	0,000	0,000	0,000	0,000	0,000	0,000	0,000	0,000
Public Area - SW Pond	2024	Stockpile Movement	Vendor/Material Hauling	0	0,000	0,000	0,000	0,000	0,000	0,000	0,000	0,000	0,000	0,000	0,000	0,000	0,000	0,000	0,000	0,000	0,000	0,000	0,000	0,000	0,000	0,000	0,000	0,000	0,000
Western Entrance	2024	Stockpile Movement	Vendor/Material Hauling	0	0,000	0,000	0,000	0,000	0,000	0,000	0,000	0,000	0,000	0,000	0,000	0,000	0,000	0,000	0,000	0,000	0,000	0,000	0,000	0,000	0,000	0,000	0,000	0,000	0,000
Shared Site Utilities	2024	Stockpile Movement	Vendor/Material Hauling	0	0,000	0,000	0,000	0,000	0,000	0,000	0,000	0,000	0,000	0,000	0,000	0,000	0,000	0,000	0,000	0,000	0,000	0,000	0,000	0,000	0,000	0,000	0,000	0,000	0,000
Compost Facility	2025	Stockpile Movement	Vendor/Material Hauling	0	0,000	0,000	0,000	0,000	0,000	0,000	0,000	0,000	0,000	0,000	0,000	0,000	0,000	0,000	0,000	0,000	0,000	0,000	0,000	0,000	0,000	0,000	0,000	0,000	0,000
Compost Facility - SW Pond	2025	Stockpile Movement	Vendor/Material Hauling	0	0,000	0,000	0,000	0,000	0,000	0,000	0,000	0,000	0,000	0,000	0,000	0,000	0,000	0,000	0,000	0,000	0,000	0,000	0,000	0,000	0,000	0,000	0,000	0,000	0,000
Landfill Construction3	2028	Stockpile Movement	Vendor/Material Hauling	0	0,000	0,000	0,000	0,000	0,000	0,000	0,000	0,000	0,000	0,000	0,000	0,000	0,000	0,000	0,000	0,000	0,000	0,000	0,000	0,000	0,000	0,000	0,000	0,000	0,000
Landfill Lining & Partial Closure4	2029	Stockpile Movement	Vendor/Material Hauling	0	0,000	0,000	0,000	0,000	0,000	0,000	0,000	0,000	0,000	0,000	0,000	0,000	0,000	0,000	0,000	0,000	0,000	0,000	0,000	0,000	0,000	0,000	0,000	0,000	0,000
Recovered Materials Storage	2029	Stockpile Movement	Vendor/Material Hauling	0	0,000	0,000	0,000	0,000	0,000	0,000	0,000	0,000	0,000	0,000	0,000	0,000	0,000	0,000	0,000	0,000	0,000	0,000	0,000	0,000	0,000	0,000	0,000	0,000	0,000
HHW Storage	2029	Stockpile Movement	Vendor/Material Hauling	0	0,000	0,000	0,000	0,000	0,000	0,000	0,000	0,000	0,000	0,000	0,000	0,000	0,000	0,000	0,000	0,000	0,000	0,000	0,000	0,000	0,000	0,000	0,000	0,000	0,000
Primary Maintenance Facility	2033	Stockpile Movement	Vendor/Material Hauling	0	0,000	0,000	0,000	0,000	0,000	0,000	0,000	0,000	0,000	0,000	0,000	0,000	0,000	0,000	0,000	0,000	0,000	0,000	0,000	0,000	0,000	0,000	0,000	0,000	0,000
Stockpile Relocation	2033	Stockpile Movement	Vendor/Material Hauling	0	0,000	0,000	0,000	0,000	0,000	0,000	0,000	0,000	0,000	0,000	0,000	0,000	0,000	0,000	0,000	0,000	0,000	0,000	0,000	0,000	0,000	0,000	0,000	0,000	0,000

Notes:

[1] The following conversion factors were used to estimate emissions:

1 lb = 453,6 g

WPWMA EIR
Construction Onroad Emissions
Plan Concept 1

Maximum On-Road Vehicle Daily Emissions across all construction phases

				Maximum Daily Emissions (lb/day) - across all construction phases												Maximum Daily Emissions (lb/day) - across all construction phases									
				Exhaust Emissions (lbs/day)										Fugitive Emissions (lbs/day)		Total Emissions (lbs/day)									
Element	**Year**		**Vehicle Type**	**TOG**	**ROG**	**CO**	**NO_X**	**SO_X**	**PM_{10}**	**$PM_{2.5}$**	**CO_2**	**CH_4**	**N_2O**	**PM_{10}**	**$PM_{2.5}$**	**TOG**	**ROG**	**CO**	**NO_X**	**SO_X**	**PM_{10}**	**$PM_{2.5}$**	**CO_2**	**CH_4**	**N_2O**
Public Area	2024		Worker Commute	0,000	0,000	0,000	0,000	0,000	0,000	0,000	0,000	0,000	0,000	0,000	0,000	0,000	0,000	0,000	0,000	0,000	0,000	0,000	0,000	0,000	0,000
Public Area - SW Pond	2024		Worker Commute	0,000	0,000	0,000	0,000	0,000	0,000	0,000	0,000	0,000	0,000	0,000	0,000	0,000	0,000	0,000	0,000	0,000	0,000	0,000	0,000	0,000	0,000
Western Entrance	2024		Worker Commute	0,000	0,000	0,000	0,000	0,000	0,000	0,000	0,000	0,000	0,000	0,000	0,000	0,000	0,000	0,000	0,000	0,000	0,000	0,000	0,000	0,000	0,000
Shared Site Utilities	2024		Worker Commute	0,000	0,000	0,000	0,000	0,000	0,000	0,000	0,000	0,000	0,000	0,000	0,000	0,000	0,000	0,000	0,000	0,000	0,000	0,000	0,000	0,000	0,000
Compost Facility	2025		Worker Commute	0,000	0,000	0,000	0,000	0,000	0,000	0,000	0,000	0,000	0,000	0,000	0,000	0,000	0,000	0,000	0,000	0,000	0,000	0,000	0,000	0,000	0,000
Compost Facility - SW Pond	2025		Worker Commute	0,000	0,000	0,000	0,000	0,000	0,000	0,000	0,000	0,000	0,000	0,000	0,000	0,000	0,000	0,000	0,000	0,000	0,000	0,000	0,000	0,000	0,000
Landfill Construction3	2028		Worker Commute	0,000	0,000	0,000	0,000	0,000	0,000	0,000	0,000	0,000	0,000	0,000	0,000	0,000	0,000	0,000	0,000	0,000	0,000	0,000	0,000	0,000	0,000
Landfill Lining & Partial Closure4	2029		Worker Commute	0,000	0,000	0,000	0,000	0,000	0,000	0,000	0,000	0,000	0,000	0,000	0,000	0,000	0,000	0,000	0,000	0,000	0,000	0,000	0,000	0,000	0,000
Recovered Materials Storage	2029		Worker Commute	0,000	0,000	0,000	0,000	0,000	0,000	0,000	0,000	0,000	0,000	0,000	0,000	0,000	0,000	0,000	0,000	0,000	0,000	0,000	0,000	0,000	0,000
HHW Storage	2029		Worker Commute	0,000	0,000	0,000	0,000	0,000	0,000	0,000	0,000	0,000	0,000	0,000	0,000	0,000	0,000	0,000	0,000	0,000	0,000	0,000	0,000	0,000	0,000
Primary Maintenance Facility	2033		Worker Commute	0,000	0,000	0,000	0,000	0,000	0,000	0,000	0,000	0,000	0,000	0,000	0,000	0,000	0,000	0,000	0,000	0,000	0,000	0,000	0,000	0,000	0,000
Stockpile Relocation	2033		Worker Commute	0,000	0,000	0,000	0,000	0,000	0,000	0,000	0,000	0,000	0,000	0,000	0,000	0,000	0,000	0,000	0,000	0,000	0,000	0,000	0,000	0,000	0,000
Public Area	2024		Vendor/Material Hauling	0,000	0,000	0,000	0,000	0,000	0,000	0,000	0,000	0,000	0,000	0,000	0,000	0,000	0,000	0,000	0,000	0,000	0,000	0,000	0,000	0,000	0,000
Public Area - SW Pond	2024		Vendor/Material Hauling	0,000	0,000	0,000	0,000	0,000	0,000	0,000	0,000	0,000	0,000	0,000	0,000	0,000	0,000	0,000	0,000	0,000	0,000	0,000	0,000	0,000	0,000
Western Entrance	2024		Vendor/Material Hauling	0,000	0,000	0,000	0,000	0,000	0,000	0,000	0,000	0,000	0,000	0,000	0,000	0,000	0,000	0,000	0,000	0,000	0,000	0,000	0,000	0,000	0,000
Shared Site Utilities	2024		Vendor/Material Hauling	0,000	0,000	0,000	0,000	0,000	0,000	0,000	0,000	0,000	0,000	0,000	0,000	0,000	0,000	0,000	0,000	0,000	0,000	0,000	0,000	0,000	0,000
Compost Facility	2025		Vendor/Material Hauling	0,000	0,000	0,000	0,000	0,000	0,000	0,000	0,000	0,000	0,000	0,000	0,000	0,000	0,000	0,000	0,000	0,000	0,000	0,000	0,000	0,000	0,000
Compost Facility - SW Pond	2025		Vendor/Material Hauling	0,000	0,000	0,000	0,000	0,000	0,000	0,000	0,000	0,000	0,000	0,000	0,000	0,000	0,000	0,000	0,000	0,000	0,000	0,000	0,000	0,000	0,000
Landfill Construction3	2028		Vendor/Material Hauling	0,000	0,000	0,000	0,000	0,000	0,000	0,000	0,000	0,000	0,000	0,000	0,000	0,000	0,000	0,000	0,000	0,000	0,000	0,000	0,000	0,000	0,000
Landfill Lining & Partial Closure4	2029		Vendor/Material Hauling	0,000	0,000	0,000	0,000	0,000	0,000	0,000	0,000	0,000	0,000	0,000	0,000	0,000	0,000	0,000	0,000	0,000	0,000	0,000	0,000	0,000	0,000
Recovered Materials Storage	2029		Vendor/Material Hauling	0,000	0,000	0,000	0,000	0,000	0,000	0,000	0,000	0,000	0,000	0,000	0,000	0,000	0,000	0,000	0,000	0,000	0,000	0,000	0,000	0,000	0,000
HHW Storage	2029		Vendor/Material Hauling	0,000	0,000	0,000	0,000	0,000	0,000	0,000	0,000	0,000	0,000	0,000	0,000	0,000	0,000	0,000	0,000	0,000	0,000	0,000	0,000	0,000	0,000
Primary Maintenance Facility	2033		Vendor/Material Hauling	0,000	0,000	0,000	0,000	0,000	0,000	0,000	0,000	0,000	0,000	0,000	0,000	0,000	0,000	0,000	0,000	0,000	0,000	0,000	0,000	0,000	0,000
Stockpile Relocation	2033		Vendor/Material Hauling	0,000	0,000	0,000	0,000	0,000	0,000	0,000	0,000	0,000	0,000	0,000	0,000	0,000	0,000	0,000	0,000	0,000	0,000	0,000	0,000	0,000	0,000

Note: Assumes element and associated stormwater pond are built concurrently (excavation is associated with pond construction), as opposed to sequentially.

Total Maximum On-Road Vehicle Daily Emissions across all construction phases (worker commute + vendor/material hauling)

			Maximum Daily Emissions (lb/day) - across all construction phases												Maximum Daily Emissions (lb/day) - across all construction phases									
			Exhaust Emissions (lbs/day)										Fugitive Emissions		Total Emissions (lbs/day)									
Element	**Year**		**TOG**	**ROG**	**CO**	**NO_X**	**SO_X**	**PM_{10}**	**$PM_{2.5}$**	**CO_2**	**CH_4**	**N_2O**	**PM_{10}**	**$PM_{2.5}$**	**TOG**	**ROG**	**CO**	**NO_X**	**SO_X**	**PM_{10}**	**$PM_{2.5}$**	**CO_2**	**CH_4**	**N_2O**
Public Area	2024		0,000	0,000	0,000	0,000	0,000	0,000	0,000	0,000	0,000	0,000	0,000	0,000	0,000	0,000	0,000	0,000	0,000	0,000	0,000	0,000	0,000	0,000
Public Area - SW Pond	2024		0,000	0,000	0,000	0,000	0,000	0,000	0,000	0,000	0,000	0,000	0,000	0,000	0,000	0,000	0,000	0,000	0,000	0,000	0,000	0,000	0,000	0,000
Western Entrance	2024		0,000	0,000	0,000	0,000	0,000	0,000	0,000	0,000	0,000	0,000	0,000	0,000	0,000	0,000	0,000	0,000	0,000	0,000	0,000	0,000	0,000	0,000
Shared Site Utilities	2024		0,000	0,000	0,000	0,000	0,000	0,000	0,000	0,000	0,000	0,000	0,000	0,000	0,000	0,000	0,000	0,000	0,000	0,000	0,000	0,000	0,000	0,000
Compost Facility	2025		0,000	0,000	0,000	0,000	0,000	0,000	0,000	0,000	0,000	0,000	0,000	0,000	0,000	0,000	0,000	0,000	0,000	0,000	0,000	0,000	0,000	0,000
Compost Facility - SW Pond	2025		0,000	0,000	0,000	0,000	0,000	0,000	0,000	0,000	0,000	0,000	0,000	0,000	0,000	0,000	0,000	0,000	0,000	0,000	0,000	0,000	0,000	0,000
Landfill Construction3	2028		0,000	0,000	0,000	0,000	0,000	0,000	0,000	0,000	0,000	0,000	0,000	0,000	0,000	0,000	0,000	0,000	0,000	0,000	0,000	0,000	0,000	0,000
Landfill Lining & Partial Closure4	2029		0,000	0,000	0,000	0,000	0,000	0,000	0,000	0,000	0,000	0,000	0,000	0,000	0,000	0,000	0,000	0,000	0,000	0,000	0,000	0,000	0,000	0,000
Recovered Materials Storage	2029		0,000	0,000	0,000	0,000	0,000	0,000	0,000	0,000	0,000	0,000	0,000	0,000	0,000	0,000	0,000	0,000	0,000	0,000	0,000	0,000	0,000	0,000
HHW Storage	2029		0,000	0,000	0,000	0,000	0,000	0,000	0,000	0,000	0,000	0,000	0,000	0,000	0,000	0,000	0,000	0,000	0,000	0,000	0,000	0,000	0,000	0,000
Primary Maintenance Facility	2033		0,000	0,000	0,000	0,000	0,000	0,000	0,000	0,000	0,000	0,000	0,000	0,000	0,000	0,000	0,000	0,000	0,000	0,000	0,000	0,000	0,000	0,000
Stockpile Relocation	2033		0,000	0,000	0,000	0,000	0,000	0,000	0,000	0,000	0,000	0,000	0,000	0,000	0,000	0,000	0,000	0,000	0,000	0,000	0,000	0,000	0,000	0,000

Maximum Daily On-Road Vehicle Emissions per Construction Year

		Maximum Daily Emissions (lb/day) - across all construction phases												Maximum Daily Emissions (lb/day) - across all construction phases									
		Exhaust Emissions (lbs/day)										Fugitive Emissions		Total Emissions (lbs/day)									
Year		**TOG**	**ROG**	**CO**	**NO_X**	**SO_X**	**PM_{10}**	**$PM_{2.5}$**	**CO_2**	**CH_4**	**N_2O**	**PM_{10}**	**$PM_{2.5}$**	**TOG**	**ROG**	**CO**	**NO_X**	**SO_X**	**PM_{10}**	**$PM_{2.5}$**	**CO_2**	**CH_4**	**N_2O**
2024		0,000	0,000	0,000	0,000	0,000	0,000	0,000	0,000	0,000	0,000	0,000	0,000	0,000	0,000	0,000	0,000	0,000	0,000	0,000	0,000	0,000	0,000
2025		0,000	0,000	0,000	0,000	0,000	0,000	0,000	0,000	0,000	0,000	0,000	0,000	0,000	0,000	0,000	0,000	0,000	0,000	0,000	0,000	0,000	0,000
2028		0,000	0,000	0,000	0,000	0,000	0,000	0,000	0,000	0,000	0,000	0,000	0,000	0,000	0,000	0,000	0,000	0,000	0,000	0,000	0,000	0,000	0,000
2029		0,000	0,000	0,000	0,000	0,000	0,000	0,000	0,000	0,000	0,000	0,000	0,000	0,000	0,000	0,000	0,000	0,000	0,000	0,000	0,000	0,000	0,000
2033		0,000	0,000	0,000	0,000	0,000	0,000	0,000	0,000	0,000	0,000	0,000	0,000	0,000	0,000	0,000	0,000	0,000	0,000	0,000	0,000	0,000	0,000

Total Annual GHG (lb/yr)

Year	CO2	CH4	N_2O
2024	0	0,00	0,00
2025	0	0,00	0,00
2028	0	0,00	0,00
2029	0	0,00	0,00
2033	0	0,00	0,00

WPWMA EIR
Construction Onroad Emissions
Plan Concept 2

= manual input

Worker Commute Vehicle Miles Traveled (VMT)

		Number of Equipment per Phase									
Element	**Year**	**Demolition**	**Site Preparation**	**Grading**	**Building Construction**	**Paving - Asphalt**	**Paving - Concrete**	**Site Preparation - Pond**	**Excavation**	**Lining and Partial Closure**	**Stockpile Movement**
Main Entrance	2024	4	3	3	0	5	7	0	0	N/A	N/A
New SW Ponds	2024	0	0	0	0	0	0	7	4	N/A	N/A
Unlined Area Excavation (1 of 3)	2024	0	7	0	0	0	0	0	16	N/A	N/A
Stockpile Relocation	2024	0	0	0	0	0	0	0	0	N/A	5
Public Area	2026	6	7	8	7	8	5	N/A	N/A	N/A	N/A
Public Area - SW Pond	2026	N/A	N/A	N/A	N/A	N/A	N/A	3	4	N/A	N/A
Unlined Area Excavation (3 of 3)	2026	0	7	0	0	0	0	0	16	N/A	N/A
Landfill Construction[3]	2031	0	7	8	0	0	0	0	24	N/A	N/A
Landfill Lining & Partial Closure[4]	2032	0	0	0	0	0	0	0	4	44	N/A
Admin Building	2032	0	2	4	5	7	7	0	0	N/A	N/A
Recovered Materials Storage	2032	0	3	3	7	7	5	0	0	N/A	N/A
Shared Site Utilities	2032	0	2	4	0	0	0	0	4	N/A	N/A

1,25 = Number of Construction Workers per Construction Equipment

21,6 = Placer County APCD Urban Roundtrip H-W Distance (miles)

Worker Commute Vehicle Miles Traveled (VMT)

		Number of Construction Workers (also equivalent to Worker Commute Roundtrips) per Day[1]										Construction Worker Commute Vehicle Miles Traveled (VMT) per Day[2]									
Element	**Year**	**Demolition**	**Site Preparation**	**Grading**	**Building Construction[1]**	**Paving - Asphalt**	**Paving - Concrete**	**Site Preparation - Pond**	**Excavation**	**Lining and Partial Closure**	**Stockpile Movement**	**Demolition**	**Site Preparation**	**Grading**	**Building Construction**	**Paving - Asphalt**	**Paving - Concrete**	**Site Preparation - Pond**	**Excavation**	**Lining and Partial Closure**	**Stockpile Movement**
Main Entrance	2024	5	4	4	0	6	9	0	0	0	0	108	86	86	0	130	194	0	0	0	0
New SW Ponds	2024	0	0	0	0	0	0	9	5	0	0	0	0	0	0	0	0	194	108	0	0
Unlined Area Excavation (1 of 3)	2024	0	9	0	0	0	0	0	20	0	0	0	194	0	0	0	0	0	432	0	0
Stockpile Relocation	2024	0	0	0	0	0	0	0	0	0	6	0	0	0	0	0	0	0	0	0	130
Public Area	2026	8	9	10	23	10	6	0	0	0	0	173	194	216	491	216	130	0	0	0	0
Public Area - SW Pond	2026	0	0	0	0	0	0	4	5	0	0	0	0	0	0	0	0	86	108	0	0
Unlined Area Excavation (3 of 3)	2026	0	9	0	0	0	0	0	20	0	0	0	194	0	0	0	0	0	432	0	0
Landfill Construction[3]	2031	0	9	10	0	0	0	0	20	0	0	0	194	216	0	0	0	0	432	0	0
Landfill Lining & Partial Closure[4]	2032	0	0	0	0	0	0	0	5	35	0	0	0	0	0	0	0	0	108	756	0
Admin Building	2032	0	3	5	4	9	9	0	0	0	0	0	65	108	91	194	194	0	0	0	0
Recovered Materials Storage	2032	0	4	4	29	9	6	0	0	0	0	0	86	86	635	194	130	0	0	0	0
Shared Site Utilities	2032	0	3	5	0	0	0	0	5	0	0	0	65	108	0	0	0	0	108	0	0

Notes:
[1] Number of Construction Workers is based on CalEEMod Appendix A assumption of 1.25 workers per equipment and 1 roundtrip per worker per day. Except for Building Construction, which is based on CalEEMod Appendix A assumption of 0.42 Daily Worker Trip Rate per 1,000 sq ft of building.
[2] VMT per day based on CalEEMod Appendix D urban roundtrip distance for Placer County APCD H-W (Home - Work).
[3] Landfill Construction Excavation construction workers based on information provided by WPWMA (20 workers per module).
[4] Landfill Lining & Partial Closure construction workers based on information provided by WPWMA (35 workers per lining/partial closure event).

Vendor/Material Hauling Vehicle Miles Traveled (VMT)

		Imported Material (cy)										Duration of Construction Phase (days)									
Element	**Year**	**Demolition**	**Site Preparation**	**Grading**	**Building Construction**	**Paving - Asphalt**	**Paving - Concrete**	**Site Preparation - Pond**	**Excavation**	**Lining and Partial Closure**	**Stockpile Movement**	**Demolition**	**Site Preparation**	**Grading**	**Building Construction**	**Paving - Asphalt**	**Paving - Concrete**	**Site Preparation - Pond**	**Excavation**	**Lining and Partial Closure**	**Stockpile Movement**
Main Entrance	2024	N/A	0	0	see next table	1 500	375	0	0	N/A	N/A	20	3	6	0	10	10	0	0	N/A	N/A
New SW Ponds	2024	N/A	0	0	see next table	0	0	0	0	N/A	N/A	0	0	0	0	0	0	10	10	N/A	N/A
Unlined Area Excavation (1 of 3)	2024	N/A	0	0	see next table	0	0	0	0	N/A	N/A	0	10	0	0	0	0	0	116	N/A	N/A
Stockpile Relocation	2024	N/A	0	0	see next table	0	0	0	0	N/A	N/A	0	0	0	0	0	0	0	0	N/A	260
Public Area	2026	N/A	0	0	see next table	9 883	1 503	N/A	N/A	N/A	N/A	20	10	30	220	20	10	N/A	N/A	N/A	N/A
Public Area - SW Pond	2026	N/A	N/A	N/A	see next table	N/A	N/A	0	0	N/A	N/A	N/A	N/A	N/A	N/A	N/A	N/A	3	1	N/A	N/A
Unlined Area Excavation (3 of 3)	2026	N/A	0	0	see next table	0	0	0	0	N/A	N/A	0	10	0	0	0	0	0	116	N/A	N/A
Landfill Construction3	2031	N/A	0	0	see next table	0	0	0	0	N/A	N/A	0	10	30	0	0	0	0	175	N/A	N/A
Landfill Lining & Partial Closure4	2032	N/A	0	0	see next table	0	0	0	0	N/A	N/A	0	0	0	0	0	0	0	13	175	N/A
Admin Building	2032	N/A	0	0	see next table	694	278	0	0	N/A	N/A	0	2	4	200	10	10	0	0	N/A	N/A
Recovered Materials Storage	2032	N/A	0	0	see next table	163	1 944	0	0	N/A	N/A	0	3	6	220	10	10	0	0	N/A	N/A
Shared Site Utilities	2032	N/A	0	0	see next table	0	0	0	0	N/A	N/A	0	2	4	0	0	0	0	1	N/A	N/A

16 = Load Capacity per Haul Truck (cy)

14,6 = Placer County APCD Urban Roundtrip C-C Distance (miles)

Vendor/Material Hauling Vehicle Miles Traveled (VMT)

		Number of Vendor/Haul Vehicle Roundtrips per Day[1]										Vendor/Haul Vehicle Miles Traveled (VMT) per Day[2]									
Element	**Year**	**Demolition**	**Site Preparation**	**Grading**	**Building Construction[3]**	**Paving - Asphalt**	**Paving - Concrete**	**Site Preparation - Pond**	**Excavation**	**Lining and Partial Closure**	**Stockpile Movement**	**Demolition**	**Site Preparation**	**Grading**	**Building Construction**	**Paving - Asphalt**	**Paving - Concrete**	**Site Preparation - Pond**	**Excavation**	**Lining and Partial Closure**	**Stockpile Movement**
Main Entrance	2024	0	0	0	0	9	2	0	0	0	0	0	0	0	0	131	29	0	0	0	0
New SW Ponds	2024	0	0	0	0	0	0	0	0	0	0	0	0	0	0	0	0	0	0	0	0
Unlined Area Excavation (1 of 3)	2024	0	0	0	0	0	0	0	0	0	0	0	0	0	0	0	0	0	0	0	0
Stockpile Relocation	2024	0	0	0	0	0	0	0	0	0	0	0	0	0	0	0	0	0	0	0	0
Public Area	2026	0	0	0	9	31	9	0	0	0	0	0	0	0	129	453	131	0	0	0	0
Public Area - SW Pond	2026	0	0	0	0	0	0	0	0	0	0	0	0	0	0	0	0	0	0	0	0
Unlined Area Excavation (3 of 3)	2026	0	0	0	0	0	0	0	0	0	0	0	0	0	0	0	0	0	0	0	0
Landfill Construction3	2031	0	0	0	0	0	0	0	0	0	0	0	0	0	0	0	0	0	0	0	0
Landfill Lining & Partial Closure4	2032	0	0	0	0	0	0	0	0	0	0	0	0	0	0	0	0	0	0	0	0
Admin Building	2032	0	0	0	2	4	2	0	0	0	0	0	0	0	24	58	29	0	0	0	0
Recovered Materials Storage	2032	0	0	0	11	1	12	0	0	0	0	0	0	0	168	15	175	0	0	0	0
Shared Site Utilities	2032	0	0	0	0	0	0	0	0	0	0	0	0	0	0	0	0	0	0	0	0

Notes:
[1] Haul truck load capacity of 16 cy per CalEEMod Appendix A.
[2] VMT per day based on CalEEMod Appendix D urban roundtrip distance for Placer County APCD C-C (Commercial - Customer).
[3] Building Construction Number of Vendor/Haul Vehicle Roundtrips is based on CalEEMod Appendix A assumption of 0.1639 Daily Vendor Trip Rate per 1,000 sq ft of building.

WPWMA EIR
Construction Onroad Emissions
Plan Concept 2
Building Construction Workers & Vendor Trips

Element	Year	Building Size (sq ft)	Construction Worker Roundtrips per Day	Vendor Roundtrips per Day[2]
Main Entrance	2024	0	0	0
New SW Ponds	2024		0	0
Unlined Area Excavation (1 of 3)	2024		0	0
Stockpile Relocation	2024		0	0
Public Area	2026	54 100	23	9
Public Area - SW Pond	2026		0	0
Unlined Area Excavation (3 of 3)	2026		0	0
Landfill Construction3	2031		0	0
Landfill Lining & Partial Closure4	2032		0	0
Admin Building	2032	10 000	4	2
Recovered Materials Storage	2032	70 000	29	11
Shared Site Utilities	2032		0	0

Note:
[1] Construction Worker Roundtrips based on CalEEMod Appendix A assumption of 0.42 daily worker trips per day per 1,000 sq ft of building.
[2] Vendor Roundtrips based on CalEEMod Appendix A assumption of 0.1639 vendor trips per day per 1,000 sq ft of building.

Worker Commute Vehicle Mix

Vehicle Type	Percent[1]
Light Duty Auto (LDA), Gasoline	50%
Light-Duty Truck Type 1 (LDT1), Gasoline	25%
Light-Duty Truck Type 2 (LDT2), Gasoline	25%

Note:
[1] Assumed worker commute vehicle mix per CalEEMod Appendix A.

Vendor/Haul Vehicle Mix

Vehicle Type	Percent[1]
Medium Heavy-Duty Truck (MHDT), Diesel	0%
Heavy Heavy-Duty Truck (HHDT), Diesel	100%

Note:
[1] Assumed vendor/haul vehicle mix per CalEEMod Appendix A.

Derivation of Paved Road Fugitive Emission Factors

Parameter	PM_{10}	$PM_{2.5}$
Average Weight [a]	2,4	2,4
k [b]	1	0,25
sL [a]	0,1	0,1
Emission Factor (g/mile) [c]	**0,300**	**0,075**

Notes:
[a] Average Weight and sL taken as the default value from CalEEMod.
[b] k taken from Table 13.2.1-1 of Section 13.2.1 of *AP-42* (USEPA, 2011).

[c] Emission factor calculated using Equation 1 from Section 13.2.1 of *AP-42* (USEPA, 2011), which is generally consistent with Section 5.3 of Appendix A of the *CalEEMod User's Guide* (Breeze Software, 2017):

Emission Factor (g/mile) = k (g/mile) x [sL (g/m^2)]$^{0.91}$ x [Average Weight (tons)]$^{1.02}$

Derivation of Unpaved Road Fugitive Emission Factors

Parameter	PM_{10}	$PM_{2.5}$
Mean Vehicle Weight [a]	16,5	16,5
Silt Content [b]	8,5	8,5
k [c]	1,50	0,15
a [c]	0,9	0,9
b [c]	0,45	0,45
P [d]	74	74
Emission Factor (g/mile) [e]	**856,528**	**85,653**

Notes:
[a] Mean vehicle weight assumes that heavy- and light-duty trucks weigh an average of 16.5 tons.
[b] Silt content taken from Table 13.2.2-1 of Section 13.2.2 of *AP-42* (USEPA, 2006) for a Construction Site, Scraper Route; this value is consistent with the CalEEMod defaults.

[c] k, a, and b taken from Table 13.2.2-2 of Section 13.2.2 of *AP-42* (USEPA, 2006) for industrial roads.

[d] P (days of precipitation) taken as the CalEEMod default for the Placer-Sacramento County climate region. Taken from Table 1.1 of Appendix D of the *CalEEMod User's Guide* (Breeze Software, 2017).
[e] Emission factor calculated using Equations 1a and 2 from Section 13.2.2 of *AP-42* (USEPA, 2006):
Emission Factor (g/mile) = {k (lbs/mile) x [Silt Content (%) / 12]^{a} x [Mean Vehicle Weight (tons) / 3]^{b}} x [(365-P) / 365] x 453.6 (g/lb)

WPWMA EIR
Construction Onroad Emissions
Plan Concept 2
Vehicle Exhaust Emission Factors

Vehicle Class	Calendar Year	Exhaust Emission Factors (g/mile) [a] TOG	ROG	CO	NO_x	SO_x	PM_{10}	$PM_{2.5}$	CO_2	CH_4	N_2O
Light Duty Auto (LDA), Gasoline	2024	7,64E-03	5,23E-03	5,32E-01	2,58E-02	2,15E-03	4,58E-02	1,88E-02	2,14E+02	1,80E-03	3,78E-03
Light Duty Auto (LDA), Gasoline	2025	6,75E-03	4,62E-03	5,06E-01	2,36E-02	2,08E-03	4,58E-02	1,87E-02	2,08E+02	1,62E-03	3,59E-03
Light Duty Auto (LDA), Gasoline	2026	6,01E-03	4,12E-03	4,84E-01	2,19E-02	2,03E-03	4,58E-02	1,87E-02	2,02E+02	1,47E-03	3,43E-03
Light Duty Auto (LDA), Gasoline	2028	4,89E-03	3,35E-03	4,51E-01	1,95E-02	1,93E-03	4,56E-02	1,86E-02	1,93E+02	1,24E-03	3,21E-03
Light Duty Auto (LDA), Gasoline	2029	4,46E-03	3,06E-03	4,38E-01	1,86E-02	1,89E-03	4,56E-02	1,85E-02	1,89E+02	1,15E-03	3,13E-03
Light Duty Auto (LDA), Gasoline	2031	3,78E-03	2,59E-03	4,18E-01	1,74E-02	1,82E-03	4,55E-02	1,84E-02	1,82E+02	1,01E-03	3,03E-03
Light Duty Auto (LDA), Gasoline	2032	3,50E-03	2,40E-03	4,10E-01	1,69E-02	1,80E-03	4,54E-02	1,84E-02	1,79E+02	9,50E-04	2,99E-03
Light Duty Auto (LDA), Gasoline	2033	3,27E-03	2,24E-03	4,04E-01	1,66E-02	1,78E-03	4,54E-02	1,83E-02	1,77E+02	9,00E-04	2,96E-03
Light-Duty Truck Type 1 (LDT1), Gasoline	2024	1,35E-02	9,26E-03	6,94E-01	4,31E-02	2,51E-03	4,60E-02	1,89E-02	2,50E+02	2,77E-03	5,12E-03
Light-Duty Truck Type 1 (LDT1), Gasoline	2025	1,16E-02	7,95E-03	6,41E-01	3,80E-02	2,44E-03	4,60E-02	1,89E-02	2,43E+02	2,43E-03	4,72E-03
Light-Duty Truck Type 1 (LDT1), Gasoline	2026	1,00E-02	6,88E-03	5,97E-01	3,40E-02	2,38E-03	4,59E-02	1,88E-02	2,37E+02	2,16E-03	4,40E-03
Light-Duty Truck Type 1 (LDT1), Gasoline	2028	7,65E-03	5,24E-03	5,29E-01	2,79E-02	2,27E-03	4,57E-02	1,87E-02	2,26E+02	1,72E-03	3,91E-03
Light-Duty Truck Type 1 (LDT1), Gasoline	2029	6,71E-03	4,60E-03	5,02E-01	2,56E-02	2,22E-03	4,57E-02	1,86E-02	2,22E+02	1,55E-03	3,73E-03
Light-Duty Truck Type 1 (LDT1), Gasoline	2031	5,23E-03	3,58E-03	4,60E-01	2,18E-02	2,15E-03	4,56E-02	1,85E-02	2,14E+02	1,28E-03	3,44E-03
Light-Duty Truck Type 1 (LDT1), Gasoline	2032	4,67E-03	3,20E-03	4,44E-01	2,05E-02	2,11E-03	4,55E-02	1,84E-02	2,11E+02	1,17E-03	3,33E-03
Light-Duty Truck Type 1 (LDT1), Gasoline	2033	4,19E-03	2,87E-03	4,31E-01	1,94E-02	2,09E-03	4,55E-02	1,84E-02	2,08E+02	1,08E-03	3,25E-03
Light-Duty Truck Type 2 (LDT2), Gasoline	2024	1,06E-02	7,28E-03	6,35E-01	3,87E-02	2,68E-03	4,59E-02	1,88E-02	2,68E+02	2,44E-03	4,83E-03
Light-Duty Truck Type 2 (LDT2), Gasoline	2025	9,51E-03	6,52E-03	6,03E-01	3,46E-02	2,59E-03	4,58E-02	1,87E-02	2,59E+02	2,23E-03	4,49E-03
Light-Duty Truck Type 2 (LDT2), Gasoline	2026	8,56E-03	5,87E-03	5,77E-01	3,13E-02	2,51E-03	4,58E-02	1,87E-02	2,51E+02	2,04E-03	4,20E-03
Light-Duty Truck Type 2 (LDT2), Gasoline	2028	7,02E-03	4,81E-03	5,34E-01	2,62E-02	2,36E-03	4,57E-02	1,86E-02	2,36E+02	1,74E-03	3,76E-03
Light-Duty Truck Type 2 (LDT2), Gasoline	2029	6,39E-03	4,38E-03	5,17E-01	2,42E-02	2,30E-03	4,56E-02	1,86E-02	2,30E+02	1,61E-03	3,60E-03
Light-Duty Truck Type 2 (LDT2), Gasoline	2031	5,38E-03	3,69E-03	4,90E-01	2,12E-02	2,19E-03	4,55E-02	1,85E-02	2,19E+02	1,40E-03	3,34E-03
Light-Duty Truck Type 2 (LDT2), Gasoline	2032	4,97E-03	3,41E-03	4,80E-01	2,01E-02	2,15E-03	4,55E-02	1,84E-02	2,15E+02	1,32E-03	3,25E-03
Light-Duty Truck Type 2 (LDT2), Gasoline	2033	4,62E-03	3,16E-03	4,71E-01	1,92E-02	2,11E-03	4,54E-02	1,84E-02	2,11E+02	1,24E-03	3,17E-03
Medium Heavy-Duty Truck (MHDT), Diesel	2024	6,54E-03	5,75E-03	5,62E-02	8,30E-01	7,34E-03	1,47E-01	6,29E-02	7,69E+02	2,67E-04	1,23E-01
Medium Heavy-Duty Truck (MHDT), Diesel	2025	6,49E-03	5,70E-03	5,64E-02	8,31E-01	7,19E-03	1,47E-01	6,29E-02	7,54E+02	2,65E-04	1,21E-01
Medium Heavy-Duty Truck (MHDT), Diesel	2026	6,45E-03	5,66E-03	5,65E-02	8,32E-01	7,07E-03	1,47E-01	6,29E-02	7,41E+02	2,63E-04	1,19E-01
Medium Heavy-Duty Truck (MHDT), Diesel	2028	6,38E-03	5,61E-03	5,67E-02	8,34E-01	6,82E-03	1,47E-01	6,29E-02	7,15E+02	2,60E-04	1,14E-01
Medium Heavy-Duty Truck (MHDT), Diesel	2029	6,36E-03	5,59E-03	5,69E-02	8,36E-01	6,71E-03	1,47E-01	6,30E-02	7,04E+02	2,59E-04	1,13E-01
Medium Heavy-Duty Truck (MHDT), Diesel	2031	6,32E-03	5,56E-03	5,71E-02	8,41E-01	6,54E-03	1,47E-01	6,30E-02	6,86E+02	2,58E-04	1,10E-01
Medium Heavy-Duty Truck (MHDT), Diesel	2032	6,31E-03	5,54E-03	5,72E-02	8,43E-01	6,47E-03	1,47E-01	6,30E-02	6,78E+02	2,57E-04	1,08E-01
Medium Heavy-Duty Truck (MHDT), Diesel	2033	6,30E-03	5,54E-03	5,73E-02	8,45E-01	6,41E-03	1,47E-01	6,30E-02	6,72E+02	2,57E-04	1,07E-01
Heavy Heavy-Duty Truck (HHDT), Diesel	2024	1,70E-02	1,49E-02	1,54E-01	1,94E+00	1,14E-02	1,09E-01	4,62E-02	1,19E+03	6,92E-04	1,99E-01
Heavy Heavy-Duty Truck (HHDT), Diesel	2025	1,68E-02	1,48E-02	1,53E-01	1,90E+00	1,11E-02	1,09E-01	4,62E-02	1,16E+03	6,85E-04	1,95E-01
Heavy Heavy-Duty Truck (HHDT), Diesel	2026	1,66E-02	1,46E-02	1,53E-01	1,86E+00	1,08E-02	1,09E-01	4,60E-02	1,14E+03	6,78E-04	1,91E-01
Heavy Heavy-Duty Truck (HHDT), Diesel	2028	1,62E-02	1,42E-02	1,51E-01	1,79E+00	1,03E-02	1,09E-01	4,58E-02	1,08E+03	6,62E-04	1,82E-01
Heavy Heavy-Duty Truck (HHDT), Diesel	2029	1,60E-02	1,41E-02	1,50E-01	1,76E+00	1,01E-02	1,08E-01	4,56E-02	1,06E+03	6,53E-04	1,77E-01
Heavy Heavy-Duty Truck (HHDT), Diesel	2031	1,56E-02	1,37E-02	1,48E-01	1,70E+00	9,66E-03	1,08E-01	4,54E-02	1,01E+03	6,36E-04	1,69E-01
Heavy Heavy-Duty Truck (HHDT), Diesel	2032	1,54E-02	1,35E-02	1,48E-01	1,68E+00	9,50E-03	1,08E-01	4,53E-02	9,95E+02	6,29E-04	1,66E-01
Heavy Heavy-Duty Truck (HHDT), Diesel	2033	1,53E-02	1,34E-02	1,47E-01	1,66E+00	9,35E-03	1,08E-01	4,52E-02	9,80E+02	6,22E-04	1,63E-01

Notes:

[a] Exhaust Emission Factors in grams per mile (g/mile) were from EMFAC2017 for Placer County. A speed of 40 miles per hour (mph) was assumed for onroad vehicles, which is consistent with the CalEEMod default. An average temperature of 64 degrees Fahrenheit (°F) and humidity of 54% were used per Table B-1 of CT-EMFAC: A Computer Model to Estimate Transportation Project Emissions (UC-Davis, 2007).

RUNEX PM10	PMBW PM10	PMTW PM10	RUNEX PM2.5	PMBW PM2.5	PMTW PM2.5
1,09E-03	3,68E-02	8,00E-03	1,00E-03	1,58E-02	2,00E-03
1,05E-03	3,68E-02	8,00E-03	9,69E-04	1,58E-02	2,00E-03
1,01E-03	3,68E-02	8,00E-03	9,28E-04	1,58E-02	2,00E-03
8,92E-04	3,68E-02	8,00E-03	8,20E-04	1,58E-02	2,00E-03
8,32E-04	3,68E-02	8,00E-03	7,65E-04	1,58E-02	2,00E-03
7,26E-04	3,68E-02	8,00E-03	6,68E-04	1,58E-02	2,00E-03
6,80E-04	3,68E-02	8,00E-03	6,25E-04	1,58E-02	2,00E-03
6,38E-04	3,68E-02	8,00E-03	5,87E-04	1,58E-02	2,00E-03
1,27E-03	3,68E-02	8,00E-03	1,17E-03	1,58E-02	2,00E-03
1,20E-03	3,68E-02	8,00E-03	1,11E-03	1,58E-02	2,00E-03
1,14E-03	3,68E-02	8,00E-03	1,05E-03	1,58E-02	2,00E-03
9,96E-04	3,68E-02	8,00E-03	9,16E-04	1,58E-02	2,00E-03
9,27E-04	3,68E-02	8,00E-03	8,52E-04	1,58E-02	2,00E-03
8,05E-04	3,68E-02	8,00E-03	7,40E-04	1,58E-02	2,00E-03
7,53E-04	3,68E-02	8,00E-03	6,92E-04	1,58E-02	2,00E-03
7,07E-04	3,68E-02	8,00E-03	6,50E-04	1,58E-02	2,00E-03
1,10E-03	3,68E-02	8,00E-03	1,01E-03	1,58E-02	2,00E-03
1,07E-03	3,68E-02	8,00E-03	9,85E-04	1,58E-02	2,00E-03
1,03E-03	3,68E-02	8,00E-03	9,50E-04	1,58E-02	2,00E-03
9,29E-04	3,68E-02	8,00E-03	8,54E-04	1,58E-02	2,00E-03
8,74E-04	3,68E-02	8,00E-03	8,03E-04	1,58E-02	2,00E-03
7,70E-04	3,68E-02	8,00E-03	7,08E-04	1,58E-02	2,00E-03
7,23E-04	3,68E-02	8,00E-03	6,65E-04	1,58E-02	2,00E-03
6,80E-04	3,68E-02	8,00E-03	6,25E-04	1,58E-02	2,00E-03
4,21E-03	1,30E-01	1,20E-02	4,03E-03	5,59E-02	3,00E-03
4,23E-03	1,30E-01	1,20E-02	4,05E-03	5,59E-02	3,00E-03
4,24E-03	1,30E-01	1,20E-02	4,06E-03	5,59E-02	3,00E-03
4,27E-03	1,30E-01	1,20E-02	4,09E-03	5,59E-02	3,00E-03
4,29E-03	1,30E-01	1,20E-02	4,11E-03	5,59E-02	3,00E-03
4,33E-03	1,30E-01	1,20E-02	4,14E-03	5,59E-02	3,00E-03
4,35E-03	1,30E-01	1,20E-02	4,16E-03	5,59E-02	3,00E-03
4,37E-03	1,30E-01	1,20E-02	4,18E-03	5,59E-02	3,00E-03
1,13E-02	6,17E-02	3,60E-02	1,08E-02	2,65E-02	9,00E-03
1,12E-02	6,17E-02	3,60E-02	1,07E-02	2,65E-02	9,00E-03
1,11E-02	6,17E-02	3,60E-02	1,06E-02	2,65E-02	9,00E-03
1,08E-02	6,17E-02	3,60E-02	1,03E-02	2,65E-02	9,00E-03
1,06E-02	6,17E-02	3,60E-02	1,02E-02	2,65E-02	9,00E-03
1,03E-02	6,17E-02	3,60E-02	9,90E-03	2,65E-02	9,00E-03
1,02E-02	6,17E-02	3,60E-02	9,79E-03	2,65E-02	9,00E-03
1,01E-02	6,17E-02	3,60E-02	9,70E-03	2,65E-02	9,00E-03

On-Road Vehicle Emission Factors

Vehicle Type [a]	Calendar Year	Frequency on Unpaved Road (%) [b]	Frequency on Paved Road (%) [b]	Exhaust Emission Factors (g/mile) [c] TOG	ROG	CO	NO_x	SO_x	PM_{10}	$PM_{2.5}$	CO_2	CH_4	N_2O	Fugitive Emission Factors (g/mile) [d] PM_{10}	$PM_{2.5}$
Worker Commute	2024	10%	90%	0,010	0,007	0,598	0,033	0,002	0,046	0,019	236,7	0,002	0,004	85,9	8,6
Worker Commute	2025	10%	90%	0,009	0,006	0,564	0,030	0,002	0,046	0,019	229,5	0,002	0,004	85,9	8,6
Worker Commute	2026	10%	90%	0,008	0,005	0,535	0,027	0,002	0,046	0,019	223,0	0,002	0,004	85,9	8,6
Worker Commute	2028	10%	90%	0,006	0,004	0,491	0,023	0,002	0,046	0,019	211,9	0,001	0,004	85,9	8,6
Worker Commute	2029	10%	90%	0,006	0,004	0,474	0,022	0,002	0,046	0,019	207,2	0,001	0,003	85,9	8,6
Worker Commute	2031	10%	90%	0,005	0,003	0,447	0,019	0,002	0,046	0,018	199,4	0,001	0,003	85,9	8,6
Worker Commute	2032	10%	90%	0,004	0,003	0,436	0,019	0,002	0,045	0,018	196,2	0,001	0,003	85,9	8,6
Worker Commute	2033	10%	90%	0,004	0,003	0,427	0,018	0,002	0,045	0,018	193,4	0,001	0,003	85,9	8,6
Vendor/Material Hauling	2024	10%	90%	0,017	0,015	0,154	1,937	0,011	0,109	0,046	1190,1	0,001	0,199	85,9	8,6
Vendor/Material Hauling	2025	10%	90%	0,017	0,015	0,153	1,900	0,011	0,109	0,046	1163,4	0,001	0,195	85,9	8,6
Vendor/Material Hauling	2026	10%	90%	0,017	0,015	0,153	1,859	0,011	0,109	0,046	1136,5	0,001	0,191	85,9	8,6
Vendor/Material Hauling	2028	10%	90%	0,016	0,014	0,151	1,789	0,010	0,109	0,046	1081,6	0,001	0,182	85,9	8,6
Vendor/Material Hauling	2029	10%	90%	0,016	0,014	0,150	1,757	0,010	0,108	0,046	1056,5	0,001	0,177	85,9	8,6
Vendor/Material Hauling	2031	10%	90%	0,016	0,014	0,148	1,701	0,010	0,108	0,045	1013,0	0,001	0,169	85,9	8,6
Vendor/Material Hauling	2032	10%	90%	0,015	0,014	0,148	1,680	0,009	0,108	0,045	995,4	0,001	0,166	85,9	8,6
Vendor/Material Hauling	2033	10%	90%	0,015	0,013	0,147	1,661	0,009	0,108	0,045	980,2	0,001	0,163	85,9	8,6

Notes:

[a] Vehicle mixes are presented in the Worker Commute Vehicle Mix and Vendor/Haul Vehicle Mix tables.

[b] On-road vehicles are assumed to be on paved roads 10% of the time and on unpaved roads 90% of the time.

[c] Exhaust Emission Factors in grams per mile (g/mile) were from EMFAC2017 for Placer County. A speed of 40 miles per hour (mph) was assumed for onroad vehicles, which is consistent with the CalEEMod default. An average temperature of 64 degrees Fahrenheit (°F) and humidity of 54% were used per Table B-1 of *CT-EMFAC: A Computer Model to Estimate Transportation Project Emissions* (UC-Davis, 2007). See Vehicle Exhaust Emission Factors table for the emission factors.

[d] Fugitive Emission Factors in grams per mile (g/mile) were calculated using *AP-42* methodology, as detailed in the Derivation of Paved Road Fugitive Emission Factors and Derivation of Unpaved Road Fugitive Emission Factors tables.

WPWMA EIR
Construction Onroad Emissions
Plan Concept 2

On-Road Vehicle Emissions

Element	Year	Phase	Vehicle Type	VMT Per Day	Exhaust Emissions (lbs/day) [1]										Fugitive Emissions (lbs/day) [1]		Total Emissions (lbs/day)										Annual (lb/yr)
					TOG	ROG	CO	NO_X	SO_X	PM_{10}	$PM_{2.5}$	CO_2	CH_4	N_2O	PM_{10}	$PM_{2.5}$	TOG	ROG	CO	NO_X	SO_X	PM_{10}	$PM_{2.5}$	CO_2	CH_4	N_2O	dpm
Main Entrance	2024	Demolition	Worker Commute	0	0.000	0.000	0.000	0.000	0.000	0.000	0.000	0.000	0.000	0.000	0.000	0.000	0.000	0.000	0.000	0.000	0.000	0.000	0.000	0.000	0.000	0.000	0.000
New SW Ponds	2024	Demolition	Worker Commute	0	0.000	0.000	0.000	0.000	0.000	0.000	0.000	0.000	0.000	0.000	0.000	0.000	0.000	0.000	0.000	0.000	0.000	0.000	0.000	0.000	0.000	0.000	0.000
Unlined Area Excavation (1 of 3)	2024	Demolition	Worker Commute	0	0.000	0.000	0.000	0.000	0.000	0.000	0.000	0.000	0.000	0.000	0.000	0.000	0.000	0.000	0.000	0.000	0.000	0.000	0.000	0.000	0.000	0.000	0.000
Stockpile Relocation	2024	Demolition	Worker Commute	0	0.000	0.000	0.000	0.000	0.000	0.000	0.000	0.000	0.000	0.000	0.000	0.000	0.000	0.000	0.000	0.000	0.000	0.000	0.000	0.000	0.000	0.000	0.000
Public Area	2026	Demolition	Worker Commute	0	0.000	0.000	0.000	0.000	0.000	0.000	0.000	0.000	0.000	0.000	0.000	0.000	0.000	0.000	0.000	0.000	0.000	0.000	0.000	0.000	0.000	0.000	0.000
Public Area - SW Pond	2026	Demolition	Worker Commute	0	0.000	0.000	0.000	0.000	0.000	0.000	0.000	0.000	0.000	0.000	0.000	0.000	0.000	0.000	0.000	0.000	0.000	0.000	0.000	0.000	0.000	0.000	0.000
Unlined Area Excavation (3 of 3)	2026	Demolition	Worker Commute	0	0.000	0.000	0.000	0.000	0.000	0.000	0.000	0.000	0.000	0.000	0.000	0.000	0.000	0.000	0.000	0.000	0.000	0.000	0.000	0.000	0.000	0.000	0.000
Landfill Construction3	2031	Demolition	Worker Commute	0	0.000	0.000	0.000	0.000	0.000	0.000	0.000	0.000	0.000	0.000	0.000	0.000	0.000	0.000	0.000	0.000	0.000	0.000	0.000	0.000	0.000	0.000	0.000
Landfill Lining & Partial Closure4	2032	Demolition	Worker Commute	0	0.000	0.000	0.000	0.000	0.000	0.000	0.000	0.000	0.000	0.000	0.000	0.000	0.000	0.000	0.000	0.000	0.000	0.000	0.000	0.000	0.000	0.000	0.000
Admin Building	2032	Demolition	Worker Commute	0	0.000	0.000	0.000	0.000	0.000	0.000	0.000	0.000	0.000	0.000	0.000	0.000	0.000	0.000	0.000	0.000	0.000	0.000	0.000	0.000	0.000	0.000	0.000
Recovered Materials Storage	2032	Demolition	Worker Commute	0	0.000	0.000	0.000	0.000	0.000	0.000	0.000	0.000	0.000	0.000	0.000	0.000	0.000	0.000	0.000	0.000	0.000	0.000	0.000	0.000	0.000	0.000	0.000
Shared Site Utilities	2032	Demolition	Worker Commute	0	0.000	0.000	0.000	0.000	0.000	0.000	0.000	0.000	0.000	0.000	0.000	0.000	0.000	0.000	0.000	0.000	0.000	0.000	0.000	0.000	0.000	0.000	0.000
Main Entrance	2024	Site Preparation	Worker Commute	0	0.000	0.000	0.000	0.000	0.000	0.000	0.000	0.000	0.000	0.000	0.000	0.000	0.000	0.000	0.000	0.000	0.000	0.000	0.000	0.000	0.000	0.000	0.000
New SW Ponds	2024	Site Preparation	Worker Commute	0	0.000	0.000	0.000	0.000	0.000	0.000	0.000	0.000	0.000	0.000	0.000	0.000	0.000	0.000	0.000	0.000	0.000	0.000	0.000	0.000	0.000	0.000	0.000
Unlined Area Excavation (1 of 3)	2024	Site Preparation	Worker Commute	0	0.000	0.000	0.000	0.000	0.000	0.000	0.000	0.000	0.000	0.000	0.000	0.000	0.000	0.000	0.000	0.000	0.000	0.000	0.000	0.000	0.000	0.000	0.000
Stockpile Relocation	2024	Site Preparation	Worker Commute	0	0.000	0.000	0.000	0.000	0.000	0.000	0.000	0.000	0.000	0.000	0.000	0.000	0.000	0.000	0.000	0.000	0.000	0.000	0.000	0.000	0.000	0.000	0.000
Public Area	2026	Site Preparation	Worker Commute	0	0.000	0.000	0.000	0.000	0.000	0.000	0.000	0.000	0.000	0.000	0.000	0.000	0.000	0.000	0.000	0.000	0.000	0.000	0.000	0.000	0.000	0.000	0.000
Public Area - SW Pond	2026	Site Preparation	Worker Commute	0	0.000	0.000	0.000	0.000	0.000	0.000	0.000	0.000	0.000	0.000	0.000	0.000	0.000	0.000	0.000	0.000	0.000	0.000	0.000	0.000	0.000	0.000	0.000
Unlined Area Excavation (3 of 3)	2026	Site Preparation	Worker Commute	0	0.000	0.000	0.000	0.000	0.000	0.000	0.000	0.000	0.000	0.000	0.000	0.000	0.000	0.000	0.000	0.000	0.000	0.000	0.000	0.000	0.000	0.000	0.000
Landfill Construction3	2031	Site Preparation	Worker Commute	0	0.000	0.000	0.000	0.000	0.000	0.000	0.000	0.000	0.000	0.000	0.000	0.000	0.000	0.000	0.000	0.000	0.000	0.000	0.000	0.000	0.000	0.000	0.000
Landfill Lining & Partial Closure4	2032	Site Preparation	Worker Commute	0	0.000	0.000	0.000	0.000	0.000	0.000	0.000	0.000	0.000	0.000	0.000	0.000	0.000	0.000	0.000	0.000	0.000	0.000	0.000	0.000	0.000	0.000	0.000
Admin Building	2032	Site Preparation	Worker Commute	0	0.000	0.000	0.000	0.000	0.000	0.000	0.000	0.000	0.000	0.000	0.000	0.000	0.000	0.000	0.000	0.000	0.000	0.000	0.000	0.000	0.000	0.000	0.000
Recovered Materials Storage	2032	Site Preparation	Worker Commute	0	0.000	0.000	0.000	0.000	0.000	0.000	0.000	0.000	0.000	0.000	0.000	0.000	0.000	0.000	0.000	0.000	0.000	0.000	0.000	0.000	0.000	0.000	0.000
Shared Site Utilities	2032	Site Preparation	Worker Commute	0	0.000	0.000	0.000	0.000	0.000	0.000	0.000	0.000	0.000	0.000	0.000	0.000	0.000	0.000	0.000	0.000	0.000	0.000	0.000	0.000	0.000	0.000	0.000
Main Entrance	2024	Grading	Worker Commute	0	0.000	0.000	0.000	0.000	0.000	0.000	0.000	0.000	0.000	0.000	0.000	0.000	0.000	0.000	0.000	0.000	0.000	0.000	0.000	0.000	0.000	0.000	0.000
New SW Ponds	2024	Grading	Worker Commute	0	0.000	0.000	0.000	0.000	0.000	0.000	0.000	0.000	0.000	0.000	0.000	0.000	0.000	0.000	0.000	0.000	0.000	0.000	0.000	0.000	0.000	0.000	0.000
Unlined Area Excavation (1 of 3)	2024	Grading	Worker Commute	0	0.000	0.000	0.000	0.000	0.000	0.000	0.000	0.000	0.000	0.000	0.000	0.000	0.000	0.000	0.000	0.000	0.000	0.000	0.000	0.000	0.000	0.000	0.000
Stockpile Relocation	2024	Grading	Worker Commute	0	0.000	0.000	0.000	0.000	0.000	0.000	0.000	0.000	0.000	0.000	0.000	0.000	0.000	0.000	0.000	0.000	0.000	0.000	0.000	0.000	0.000	0.000	0.000
Public Area	2026	Grading	Worker Commute	0	0.000	0.000	0.000	0.000	0.000	0.000	0.000	0.000	0.000	0.000	0.000	0.000	0.000	0.000	0.000	0.000	0.000	0.000	0.000	0.000	0.000	0.000	0.000
Public Area - SW Pond	2026	Grading	Worker Commute	0	0.000	0.000	0.000	0.000	0.000	0.000	0.000	0.000	0.000	0.000	0.000	0.000	0.000	0.000	0.000	0.000	0.000	0.000	0.000	0.000	0.000	0.000	0.000
Unlined Area Excavation (3 of 3)	2026	Grading	Worker Commute	0	0.000	0.000	0.000	0.000	0.000	0.000	0.000	0.000	0.000	0.000	0.000	0.000	0.000	0.000	0.000	0.000	0.000	0.000	0.000	0.000	0.000	0.000	0.000
Landfill Construction3	2031	Grading	Worker Commute	0	0.000	0.000	0.000	0.000	0.000	0.000	0.000	0.000	0.000	0.000	0.000	0.000	0.000	0.000	0.000	0.000	0.000	0.000	0.000	0.000	0.000	0.000	0.000
Landfill Lining & Partial Closure4	2032	Grading	Worker Commute	0	0.000	0.000	0.000	0.000	0.000	0.000	0.000	0.000	0.000	0.000	0.000	0.000	0.000	0.000	0.000	0.000	0.000	0.000	0.000	0.000	0.000	0.000	0.000
Admin Building	2032	Grading	Worker Commute	0	0.000	0.000	0.000	0.000	0.000	0.000	0.000	0.000	0.000	0.000	0.000	0.000	0.000	0.000	0.000	0.000	0.000	0.000	0.000	0.000	0.000	0.000	0.000
Recovered Materials Storage	2032	Grading	Worker Commute	0	0.000	0.000	0.000	0.000	0.000	0.000	0.000	0.000	0.000	0.000	0.000	0.000	0.000	0.000	0.000	0.000	0.000	0.000	0.000	0.000	0.000	0.000	0.000
Shared Site Utilities	2032	Grading	Worker Commute	0	0.000	0.000	0.000	0.000	0.000	0.000	0.000	0.000	0.000	0.000	0.000	0.000	0.000	0.000	0.000	0.000	0.000	0.000	0.000	0.000	0.000	0.000	0.000
Main Entrance	2024	Building Construction	Worker Commute	0	0.000	0.000	0.000	0.000	0.000	0.000	0.000	0.000	0.000	0.000	0.000	0.000	0.000	0.000	0.000	0.000	0.000	0.000	0.000	0.000	0.000	0.000	0.000
New SW Ponds	2024	Building Construction	Worker Commute	0	0.000	0.000	0.000	0.000	0.000	0.000	0.000	0.000	0.000	0.000	0.000	0.000	0.000	0.000	0.000	0.000	0.000	0.000	0.000	0.000	0.000	0.000	0.000
Unlined Area Excavation (1 of 3)	2024	Building Construction	Worker Commute	0	0.000	0.000	0.000	0.000	0.000	0.000	0.000	0.000	0.000	0.000	0.000	0.000	0.000	0.000	0.000	0.000	0.000	0.000	0.000	0.000	0.000	0.000	0.000
Stockpile Relocation	2024	Building Construction	Worker Commute	0	0.000	0.000	0.000	0.000	0.000	0.000	0.000	0.000	0.000	0.000	0.000	0.000	0.000	0.000	0.000	0.000	0.000	0.000	0.000	0.000	0.000	0.000	0.000
Public Area	2026	Building Construction	Worker Commute	0	0.000	0.000	0.000	0.000	0.000	0.000	0.000	0.000	0.000	0.000	0.000	0.000	0.000	0.000	0.000	0.000	0.000	0.000	0.000	0.000	0.000	0.000	0.000
Public Area - SW Pond	2026	Building Construction	Worker Commute	0	0.000	0.000	0.000	0.000	0.000	0.000	0.000	0.000	0.000	0.000	0.000	0.000	0.000	0.000	0.000	0.000	0.000	0.000	0.000	0.000	0.000	0.000	0.000
Unlined Area Excavation (3 of 3)	2026	Building Construction	Worker Commute	0	0.000	0.000	0.000	0.000	0.000	0.000	0.000	0.000	0.000	0.000	0.000	0.000	0.000	0.000	0.000	0.000	0.000	0.000	0.000	0.000	0.000	0.000	0.000
Landfill Construction3	2031	Building Construction	Worker Commute	0	0.000	0.000	0.000	0.000	0.000	0.000	0.000	0.000	0.000	0.000	0.000	0.000	0.000	0.000	0.000	0.000	0.000	0.000	0.000	0.000	0.000	0.000	0.000
Landfill Lining & Partial Closure4	2032	Building Construction	Worker Commute	0	0.000	0.000	0.000	0.000	0.000	0.000	0.000	0.000	0.000	0.000	0.000	0.000	0.000	0.000	0.000	0.000	0.000	0.000	0.000	0.000	0.000	0.000	0.000
Admin Building	2032	Building Construction	Worker Commute	0	0.000	0.000	0.000	0.000	0.000	0.000	0.000	0.000	0.000	0.000	0.000	0.000	0.000	0.000	0.000	0.000	0.000	0.000	0.000	0.000	0.000	0.000	0.000
Recovered Materials Storage	2032	Building Construction	Worker Commute	0	0.000	0.000	0.000	0.000	0.000	0.000	0.000	0.000	0.000	0.000	0.000	0.000	0.000	0.000	0.000	0.000	0.000	0.000	0.000	0.000	0.000	0.000	0.000
Shared Site Utilities	2032	Building Construction	Worker Commute	0	0.000	0.000	0.000	0.000	0.000	0.000	0.000	0.000	0.000	0.000	0.000	0.000	0.000	0.000	0.000	0.000	0.000	0.000	0.000	0.000	0.000	0.000	0.000
Main Entrance	2024	Paving - Asphalt	Worker Commute	0	0.000	0.000	0.000	0.000	0.000	0.000	0.000	0.000	0.000	0.000	0.000	0.000	0.000	0.000	0.000	0.000	0.000	0.000	0.000	0.000	0.000	0.000	0.000
New SW Ponds	2024	Paving - Asphalt	Worker Commute	0	0.000	0.000	0.000	0.000	0.000	0.000	0.000	0.000	0.000	0.000	0.000	0.000	0.000	0.000	0.000	0.000	0.000	0.000	0.000	0.000	0.000	0.000	0.000
Unlined Area Excavation (1 of 3)	2024	Paving - Asphalt	Worker Commute	0	0.000	0.000	0.000	0.000	0.000	0.000	0.000	0.000	0.000	0.000	0.000	0.000	0.000	0.000	0.000	0.000	0.000	0.000	0.000	0.000	0.000	0.000	0.000
Stockpile Relocation	2024	Paving - Asphalt	Worker Commute	0	0.000	0.000	0.000	0.000	0.000	0.000	0.000	0.000	0.000	0.000	0.000	0.000	0.000	0.000	0.000	0.000	0.000	0.000	0.000	0.000	0.000	0.000	0.000
Public Area	2026	Paving - Asphalt	Worker Commute	0	0.000	0.000	0.000	0.000	0.000	0.000	0.000	0.000	0.000	0.000	0.000	0.000	0.000	0.000	0.000	0.000	0.000	0.000	0.000	0.000	0.000	0.000	0.000
Public Area - SW Pond	2026	Paving - Asphalt	Worker Commute	0	0.000	0.000	0.000	0.000	0.000	0.000	0.000	0.000	0.000	0.000	0.000	0.000	0.000	0.000	0.000	0.000	0.000	0.000	0.000	0.000	0.000	0.000	0.000
Unlined Area Excavation (3 of 3)	2026	Paving - Asphalt	Worker Commute	0	0.000	0.000	0.000	0.000	0.000	0.000	0.000	0.000	0.000	0.000	0.000	0.000	0.000	0.000	0.000	0.000	0.000	0.000	0.000	0.000	0.000	0.000	0.000
Landfill Construction3	2031	Paving - Asphalt	Worker Commute	0	0.000	0.000	0.000	0.000	0.000	0.000	0.000	0.000	0.000	0.000	0.000	0.000	0.000	0.000	0.000	0.000	0.000	0.000	0.000	0.000	0.000	0.000	0.000
Landfill Lining & Partial Closure4	2032	Paving - Asphalt	Worker Commute	0	0.000	0.000	0.000	0.000	0.000	0.000	0.000	0.000	0.000	0.000	0.000	0.000	0.000	0.000	0.000	0.000	0.000	0.000	0.000	0.000	0.000	0.000	0.000
Admin Building	2032	Paving - Asphalt	Worker Commute	0	0.000	0.000	0.000	0.000	0.000	0.000	0.000	0.000	0.000	0.000	0.000	0.000	0.000	0.000	0.000	0.000	0.000	0.000	0.000	0.000	0.000	0.000	0.000
Recovered Materials Storage	2032	Paving - Asphalt	Worker Commute	0	0.000	0.000	0.000	0.000	0.000	0.000	0.000	0.000	0.000	0.000	0.000	0.000	0.000	0.000	0.000	0.000	0.000	0.000	0.000	0.000	0.000	0.000	0.000
Shared Site Utilities	2032	Paving - Asphalt	Worker Commute	0	0.000	0.000	0.000	0.000	0.000	0.000	0.000	0.000	0.000	0.000	0.000	0.000	0.000	0.000	0.000	0.000	0.000	0.000	0.000	0.000	0.000	0.000	0.000
Main Entrance	2024	Paving - Concrete	Worker Commute	0	0.000	0.000	0.000	0.000	0.000	0.000	0.000	0.000	0.000	0.000	0.000	0.000	0.000	0.000	0.000	0.000	0.000	0.000	0.000	0.000	0.000	0.000	0.000
New SW Ponds	2024	Paving - Concrete	Worker Commute	0	0.000	0.000	0.000	0.000	0.000	0.000	0.000	0.000	0.000	0.000	0.000	0.000	0.000	0.000	0.000	0.000	0.000	0.000	0.000	0.000	0.000	0.000	0.000
Unlined Area Excavation (1 of 3)	2024	Paving - Concrete	Worker Commute	0	0.000	0.000	0.000	0.000	0.000	0.000	0.000	0.000	0.000	0.000	0.000	0.000	0.000	0.000	0.000	0.000	0.000	0.000	0.000	0.000	0.000	0.000	0.000
Stockpile Relocation	2024	Paving - Concrete	Worker Commute	0	0.000	0.000	0.000	0.000	0.000	0.000	0.000	0.000	0.000	0.000	0.000	0.000	0.000	0.000	0.000	0.000	0.000	0.000	0.000	0.000	0.000	0.000	0.000
Public Area	2026	Paving - Concrete	Worker Commute	0	0.000	0.000	0.000	0.000	0.000	0.000	0.000	0.000	0.000	0.000	0.000	0.000	0.000	0.000	0.000	0.000	0.000	0.000	0.000	0.000	0.000	0.000	0.000
Public Area - SW Pond	2026	Paving - Concrete	Worker Commute	0	0.000	0.000	0.000	0.000	0.000	0.000	0.000	0.000	0.000	0.000	0.000	0.000	0.000	0.000	0.000	0.000	0.000	0.000	0.000	0.000	0.000	0.000	0.000
Unlined Area Excavation (3 of 3)	2026	Paving - Concrete	Worker Commute	0	0.000	0.000	0.000	0.000	0.000	0.000	0.000	0.000	0.000	0.000	0.000	0.000	0.000	0.000	0.000	0.000	0.000	0.000	0.000	0.000	0.000	0.000	0.000
Landfill Construction3	2031	Paving - Concrete	Worker Commute	0	0.000	0.000	0.000	0.000	0.000	0.000	0.000	0.000	0.000	0.000	0.000	0.000	0.000	0.000	0.000	0.000	0.000	0.000	0.000	0.000	0.000	0.000	0.000
Landfill Lining & Partial Closure4	2032	Paving - Concrete	Worker Commute	0	0.000	0.000	0.000	0.000	0.000	0.000	0.000	0.000	0.000	0.000	0.000	0.000	0.000	0.000	0.000	0.000	0.000	0.000	0.000	0.000	0.000	0.000	0.000
Admin Building	2032	Paving - Concrete	Worker Commute	0	0.000	0.000	0.000	0.000	0.000	0.000	0.000	0.000	0.000	0.000	0.000	0.000	0.000	0.000	0.000	0.000	0.000	0.000	0.000	0.000	0.000	0.000	0.000
Recovered Materials Storage	2032	Paving - Concrete	Worker Commute	0	0.000	0.000	0.000	0.000	0.000	0.000	0.000	0.000	0.000	0.000	0.000	0.000	0.000	0.000	0.000	0.000	0.000	0.000	0.000	0.000	0.000	0.000	0.000
Shared Site Utilities	2032	Paving - Concrete	Worker Commute	0	0.000	0.000	0.000	0.000	0.000	0.000	0.000	0.000	0.000	0.000	0.000	0.000	0.000	0.000	0.000	0.000	0.000	0.000	0.000	0.000	0.000	0.000	0.000
Main Entrance	2024	Site Preparation - Pond	Worker Commute	0	0.000	0.000	0.000	0.000	0.000	0.000	0.000	0.000	0.000	0.000	0.000	0.000	0.000	0.000	0.000	0.000	0.000	0.000	0.000	0.000	0.000	0.000	0.000
New SW Ponds	2024	Site Preparation - Pond	Worker Commute	0	0.000	0.000	0.000	0.000	0.000	0.000	0.000	0.000	0.000	0.000	0.000	0.000	0.000	0.000	0.000	0.000	0.000	0.000	0.000	0.000	0.000	0.000	0.000
Unlined Area Excavation (1 of 3)	2024	Site Preparation - Pond	Worker Commute	0	0.000	0.000	0.000	0.000	0.000	0.000	0.000	0.000	0.000	0.000	0.000	0.000	0.000	0.000	0.000	0.000	0.000	0.000	0.000	0.000	0.000	0.000	0.000
Stockpile Relocation	2024	Site Preparation - Pond	Worker Commute	0	0.000	0.000	0.000	0.000	0.000	0.000	0.000	0.000	0.000	0.000	0.000	0.000	0.000	0.000	0.000	0.000	0.000	0.000	0.000	0.000	0.000	0.000	0.000
Public Area	2026	Site Preparation - Pond	Worker Commute	0	0.000	0.000	0.000	0.000	0.000	0.000	0.000	0.000	0.000	0.000	0.000	0.000	0.000	0.000	0.000	0.000	0.000	0.000	0.000	0.000	0.000	0.000	0.000
Public Area - SW Pond	2026	Site Preparation - Pond	Worker Commute	0	0.000	0.000	0.000	0.000	0.000	0.000	0.000	0.000	0.000	0.000	0.000	0.000	0.000	0.000	0.000	0.000	0.000	0.000	0.000	0.000	0.000	0.000	0.000
Unlined Area Excavation (3 of 3)	2026	Site Preparation - Pond	Worker Commute	0	0.000	0.000	0.000	0.000	0.000	0.000	0.000	0.000	0.000	0.000	0.000	0.000	0.000	0.000	0.000	0.000	0.000	0.000	0.000	0.000	0.000	0.000	0.000
Landfill Construction3	2031	Site Preparation - Pond	Worker Commute	0	0.000	0.000	0.000	0.000	0.000	0.000	0.000	0.000	0.000	0.000	0.000	0.000	0.000	0.000	0.000	0.000	0.000	0.000	0.000	0.000	0.000	0.000	0.000
Landfill Lining & Partial Closure4	2032	Site Preparation - Pond	Worker Commute	0	0.000	0.000	0.000	0.000	0.000	0.000	0.000	0.000	0.000	0.000	0.000	0.000	0.000	0.000	0.000	0.000	0.000	0.000	0.000	0.000	0.000	0.000	0.000
Admin Building	2032	Site Preparation - Pond	Worker Commute	0	0.000	0.000	0.000	0.000	0.000	0.000	0.000	0.000	0.000	0.000	0.000	0.000	0.000	0.000	0.000	0.000	0.000	0.000	0.000	0.000	0.000	0.000	0.000
Recovered Materials Storage	2032	Site Preparation - Pond	Worker Commute	0	0.000	0.000	0.000	0.000	0.000	0.000	0.000	0.000	0.000	0.000	0.000	0.000	0.000	0.000	0.000	0.000	0.000	0.000	0.000	0.000	0.000	0.000	0.000
Shared Site Utilities	2032	Site Preparation - Pond	Worker Commute	0	0.000	0.000	0.000	0.000	0.000	0.000	0.000	0.000	0.000	0.000	0.000	0.000	0.000	0.000	0.000	0.000	0.000	0.000	0.000	0.000	0.000	0.000	0.000
Main Entrance	2024	Excavation	Worker Commute	0	0.000	0.000	0.000	0.000	0.000	0.000	0.000	0.000	0.000	0.000	0.000	0.000	0.000	0.000	0.000	0.000	0.000	0.000	0.000	0.000	0.000	0.000	0.000
New SW Ponds	2024	Excavation	Worker Commute	0	0.000	0.000	0.000	0.000	0.000	0.000	0.000	0.000	0.000	0.000	0.000	0.000	0.000	0.000	0.000	0.000	0.000	0.000	0.000	0.000	0.000	0.000	0.000
Unlined Area Excavation (1 of 3)	2024	Excavation	Worker Commute	0	0.000	0.000	0.000	0.000	0.000	0.000	0.000	0.000	0.000	0.000	0.000	0.000	0.000	0.000	0.000	0.000	0.000	0.000	0.000	0.000	0.000	0.000	0.000
Stockpile Relocation	2024	Excavation	Worker Commute	0	0.000	0.000	0.000	0.000	0.000	0.000	0.000	0.000	0.000	0.000	0.000	0.000	0.000	0.000	0.000	0.000	0.000	0.000	0.000	0.000	0.000	0.000	0.000
Public Area	2026	Excavation	Worker Commute	0	0.000	0.000	0.000	0.000	0.000	0.000	0.000	0.000	0.000	0.000	0.000	0.000	0.000	0.000	0.000	0.000	0.000	0.000	0.000	0.000	0.000	0.000	0.000

WPWMA EIR
Construction Onroad Emissions
Plan Concept 2

Public Area - SW Pond	2026	Excavation	Worker Commute	0	0,000	0,000	0,000	0,000	0,000	0,000	0,000	0,000	0,000	0,000	0,000	0,000	0,000	0,000	0,000	0,000	0,000	0,000	0,000	0,000	0,000	0,000	0,000
Unlined Area Excavation (3 of 3)	2026	Excavation	Worker Commute	0	0,000	0,000	0,000	0,000	0,000	0,000	0,000	0,000	0,000	0,000	0,000	0,000	0,000	0,000	0,000	0,000	0,000	0,000	0,000	0,000	0,000	0,000	0,000
Landfill Construction3	2031	Excavation	Worker Commute	0	0,000	0,000	0,000	0,000	0,000	0,000	0,000	0,000	0,000	0,000	0,000	0,000	0,000	0,000	0,000	0,000	0,000	0,000	0,000	0,000	0,000	0,000	0,000
Landfill Lining & Partial Closure4	2032	Excavation	Worker Commute	0	0,000	0,000	0,000	0,000	0,000	0,000	0,000	0,000	0,000	0,000	0,000	0,000	0,000	0,000	0,000	0,000	0,000	0,000	0,000	0,000	0,000	0,000	0,000
Admin Building	2032	Excavation	Worker Commute	0	0,000	0,000	0,000	0,000	0,000	0,000	0,000	0,000	0,000	0,000	0,000	0,000	0,000	0,000	0,000	0,000	0,000	0,000	0,000	0,000	0,000	0,000	0,000
Recovered Materials Storage	2032	Excavation	Worker Commute	0	0,000	0,000	0,000	0,000	0,000	0,000	0,000	0,000	0,000	0,000	0,000	0,000	0,000	0,000	0,000	0,000	0,000	0,000	0,000	0,000	0,000	0,000	0,000
Shared Site Utilities	2032	Excavation	Worker Commute	0	0,000	0,000	0,000	0,000	0,000	0,000	0,000	0,000	0,000	0,000	0,000	0,000	0,000	0,000	0,000	0,000	0,000	0,000	0,000	0,000	0,000	0,000	0,000
Main Entrance	2024	Lining and Partial Closure	Worker Commute	0	0,000	0,000	0,000	0,000	0,000	0,000	0,000	0,000	0,000	0,000	0,000	0,000	0,000	0,000	0,000	0,000	0,000	0,000	0,000	0,000	0,000	0,000	0,000
New SW Ponds	2024	Lining and Partial Closure	Worker Commute	0	0,000	0,000	0,000	0,000	0,000	0,000	0,000	0,000	0,000	0,000	0,000	0,000	0,000	0,000	0,000	0,000	0,000	0,000	0,000	0,000	0,000	0,000	0,000
Unlined Area Excavation (1 of 3)	2024	Lining and Partial Closure	Worker Commute	0	0,000	0,000	0,000	0,000	0,000	0,000	0,000	0,000	0,000	0,000	0,000	0,000	0,000	0,000	0,000	0,000	0,000	0,000	0,000	0,000	0,000	0,000	0,000
Stockpile Relocation	2024	Lining and Partial Closure	Worker Commute	0	0,000	0,000	0,000	0,000	0,000	0,000	0,000	0,000	0,000	0,000	0,000	0,000	0,000	0,000	0,000	0,000	0,000	0,000	0,000	0,000	0,000	0,000	0,000
Public Area	2026	Lining and Partial Closure	Worker Commute	0	0,000	0,000	0,000	0,000	0,000	0,000	0,000	0,000	0,000	0,000	0,000	0,000	0,000	0,000	0,000	0,000	0,000	0,000	0,000	0,000	0,000	0,000	0,000
Public Area - SW Pond	2026	Lining and Partial Closure	Worker Commute	0	0,000	0,000	0,000	0,000	0,000	0,000	0,000	0,000	0,000	0,000	0,000	0,000	0,000	0,000	0,000	0,000	0,000	0,000	0,000	0,000	0,000	0,000	0,000
Unlined Area Excavation (3 of 3)	2026	Lining and Partial Closure	Worker Commute	0	0,000	0,000	0,000	0,000	0,000	0,000	0,000	0,000	0,000	0,000	0,000	0,000	0,000	0,000	0,000	0,000	0,000	0,000	0,000	0,000	0,000	0,000	0,000
Landfill Construction3	2031	Lining and Partial Closure	Worker Commute	0	0,000	0,000	0,000	0,000	0,000	0,000	0,000	0,000	0,000	0,000	0,000	0,000	0,000	0,000	0,000	0,000	0,000	0,000	0,000	0,000	0,000	0,000	0,000
Landfill Lining & Partial Closure4	2032	Lining and Partial Closure	Worker Commute	0	0,000	0,000	0,000	0,000	0,000	0,000	0,000	0,000	0,000	0,000	0,000	0,000	0,000	0,000	0,000	0,000	0,000	0,000	0,000	0,000	0,000	0,000	0,000
Admin Building	2032	Lining and Partial Closure	Worker Commute	0	0,000	0,000	0,000	0,000	0,000	0,000	0,000	0,000	0,000	0,000	0,000	0,000	0,000	0,000	0,000	0,000	0,000	0,000	0,000	0,000	0,000	0,000	0,000
Recovered Materials Storage	2032	Lining and Partial Closure	Worker Commute	0	0,000	0,000	0,000	0,000	0,000	0,000	0,000	0,000	0,000	0,000	0,000	0,000	0,000	0,000	0,000	0,000	0,000	0,000	0,000	0,000	0,000	0,000	0,000
Shared Site Utilities	2032	Lining and Partial Closure	Worker Commute	0	0,000	0,000	0,000	0,000	0,000	0,000	0,000	0,000	0,000	0,000	0,000	0,000	0,000	0,000	0,000	0,000	0,000	0,000	0,000	0,000	0,000	0,000	0,000
Main Entrance	2024	Stockpile Movement	Worker Commute	0	0,000	0,000	0,000	0,000	0,000	0,000	0,000	0,000	0,000	0,000	0,000	0,000	0,000	0,000	0,000	0,000	0,000	0,000	0,000	0,000	0,000	0,000	0,000
New SW Ponds	2024	Stockpile Movement	Worker Commute	0	0,000	0,000	0,000	0,000	0,000	0,000	0,000	0,000	0,000	0,000	0,000	0,000	0,000	0,000	0,000	0,000	0,000	0,000	0,000	0,000	0,000	0,000	0,000
Unlined Area Excavation (1 of 3)	2024	Stockpile Movement	Worker Commute	0	0,000	0,000	0,000	0,000	0,000	0,000	0,000	0,000	0,000	0,000	0,000	0,000	0,000	0,000	0,000	0,000	0,000	0,000	0,000	0,000	0,000	0,000	0,000
Stockpile Relocation	2024	Stockpile Movement	Worker Commute	0	0,000	0,000	0,000	0,000	0,000	0,000	0,000	0,000	0,000	0,000	0,000	0,000	0,000	0,000	0,000	0,000	0,000	0,000	0,000	0,000	0,000	0,000	0,000
Public Area	2026	Stockpile Movement	Worker Commute	0	0,000	0,000	0,000	0,000	0,000	0,000	0,000	0,000	0,000	0,000	0,000	0,000	0,000	0,000	0,000	0,000	0,000	0,000	0,000	0,000	0,000	0,000	0,000
Public Area - SW Pond	2026	Stockpile Movement	Worker Commute	0	0,000	0,000	0,000	0,000	0,000	0,000	0,000	0,000	0,000	0,000	0,000	0,000	0,000	0,000	0,000	0,000	0,000	0,000	0,000	0,000	0,000	0,000	0,000
Unlined Area Excavation (3 of 3)	2026	Stockpile Movement	Worker Commute	0	0,000	0,000	0,000	0,000	0,000	0,000	0,000	0,000	0,000	0,000	0,000	0,000	0,000	0,000	0,000	0,000	0,000	0,000	0,000	0,000	0,000	0,000	0,000
Landfill Construction3	2031	Stockpile Movement	Worker Commute	0	0,000	0,000	0,000	0,000	0,000	0,000	0,000	0,000	0,000	0,000	0,000	0,000	0,000	0,000	0,000	0,000	0,000	0,000	0,000	0,000	0,000	0,000	0,000
Landfill Lining & Partial Closure4	2032	Stockpile Movement	Worker Commute	0	0,000	0,000	0,000	0,000	0,000	0,000	0,000	0,000	0,000	0,000	0,000	0,000	0,000	0,000	0,000	0,000	0,000	0,000	0,000	0,000	0,000	0,000	0,000
Admin Building	2032	Stockpile Movement	Worker Commute	0	0,000	0,000	0,000	0,000	0,000	0,000	0,000	0,000	0,000	0,000	0,000	0,000	0,000	0,000	0,000	0,000	0,000	0,000	0,000	0,000	0,000	0,000	0,000
Recovered Materials Storage	2032	Stockpile Movement	Worker Commute	0	0,000	0,000	0,000	0,000	0,000	0,000	0,000	0,000	0,000	0,000	0,000	0,000	0,000	0,000	0,000	0,000	0,000	0,000	0,000	0,000	0,000	0,000	0,000
Shared Site Utilities	2032	Stockpile Movement	Worker Commute	0	0,000	0,000	0,000	0,000	0,000	0,000	0,000	0,000	0,000	0,000	0,000	0,000	0,000	0,000	0,000	0,000	0,000	0,000	0,000	0,000	0,000	0,000	0,000
Main Entrance	2024	Demolition	Vendor/Material Hauling	0	0,000	0,000	0,000	0,000	0,000	0,000	0,000	0,000	0,000	0,000	0,000	0,000	0,000	0,000	0,000	0,000	0,000	0,000	0,000	0,000	0,000	0,000	0,000
New SW Ponds	2024	Demolition	Vendor/Material Hauling	0	0,000	0,000	0,000	0,000	0,000	0,000	0,000	0,000	0,000	0,000	0,000	0,000	0,000	0,000	0,000	0,000	0,000	0,000	0,000	0,000	0,000	0,000	0,000
Unlined Area Excavation (1 of 3)	2024	Demolition	Vendor/Material Hauling	0	0,000	0,000	0,000	0,000	0,000	0,000	0,000	0,000	0,000	0,000	0,000	0,000	0,000	0,000	0,000	0,000	0,000	0,000	0,000	0,000	0,000	0,000	0,000
Stockpile Relocation	2024	Demolition	Vendor/Material Hauling	0	0,000	0,000	0,000	0,000	0,000	0,000	0,000	0,000	0,000	0,000	0,000	0,000	0,000	0,000	0,000	0,000	0,000	0,000	0,000	0,000	0,000	0,000	0,000
Public Area	2026	Demolition	Vendor/Material Hauling	0	0,000	0,000	0,000	0,000	0,000	0,000	0,000	0,000	0,000	0,000	0,000	0,000	0,000	0,000	0,000	0,000	0,000	0,000	0,000	0,000	0,000	0,000	0,000
Public Area - SW Pond	2026	Demolition	Vendor/Material Hauling	0	0,000	0,000	0,000	0,000	0,000	0,000	0,000	0,000	0,000	0,000	0,000	0,000	0,000	0,000	0,000	0,000	0,000	0,000	0,000	0,000	0,000	0,000	0,000
Unlined Area Excavation (3 of 3)	2026	Demolition	Vendor/Material Hauling	0	0,000	0,000	0,000	0,000	0,000	0,000	0,000	0,000	0,000	0,000	0,000	0,000	0,000	0,000	0,000	0,000	0,000	0,000	0,000	0,000	0,000	0,000	0,000
Landfill Construction3	2031	Demolition	Vendor/Material Hauling	0	0,000	0,000	0,000	0,000	0,000	0,000	0,000	0,000	0,000	0,000	0,000	0,000	0,000	0,000	0,000	0,000	0,000	0,000	0,000	0,000	0,000	0,000	0,000
Landfill Lining & Partial Closure4	2032	Demolition	Vendor/Material Hauling	0	0,000	0,000	0,000	0,000	0,000	0,000	0,000	0,000	0,000	0,000	0,000	0,000	0,000	0,000	0,000	0,000	0,000	0,000	0,000	0,000	0,000	0,000	0,000
Admin Building	2032	Demolition	Vendor/Material Hauling	0	0,000	0,000	0,000	0,000	0,000	0,000	0,000	0,000	0,000	0,000	0,000	0,000	0,000	0,000	0,000	0,000	0,000	0,000	0,000	0,000	0,000	0,000	0,000
Recovered Materials Storage	2032	Demolition	Vendor/Material Hauling	0	0,000	0,000	0,000	0,000	0,000	0,000	0,000	0,000	0,000	0,000	0,000	0,000	0,000	0,000	0,000	0,000	0,000	0,000	0,000	0,000	0,000	0,000	0,000
Shared Site Utilities	2032	Demolition	Vendor/Material Hauling	0	0,000	0,000	0,000	0,000	0,000	0,000	0,000	0,000	0,000	0,000	0,000	0,000	0,000	0,000	0,000	0,000	0,000	0,000	0,000	0,000	0,000	0,000	0,000
Main Entrance	2024	Site Preparation	Vendor/Material Hauling	0	0,000	0,000	0,000	0,000	0,000	0,000	0,000	0,000	0,000	0,000	0,000	0,000	0,000	0,000	0,000	0,000	0,000	0,000	0,000	0,000	0,000	0,000	0,000
New SW Ponds	2024	Site Preparation	Vendor/Material Hauling	0	0,000	0,000	0,000	0,000	0,000	0,000	0,000	0,000	0,000	0,000	0,000	0,000	0,000	0,000	0,000	0,000	0,000	0,000	0,000	0,000	0,000	0,000	0,000
Unlined Area Excavation (1 of 3)	2024	Site Preparation	Vendor/Material Hauling	0	0,000	0,000	0,000	0,000	0,000	0,000	0,000	0,000	0,000	0,000	0,000	0,000	0,000	0,000	0,000	0,000	0,000	0,000	0,000	0,000	0,000	0,000	0,000
Stockpile Relocation	2024	Site Preparation	Vendor/Material Hauling	0	0,000	0,000	0,000	0,000	0,000	0,000	0,000	0,000	0,000	0,000	0,000	0,000	0,000	0,000	0,000	0,000	0,000	0,000	0,000	0,000	0,000	0,000	0,000
Public Area	2026	Site Preparation	Vendor/Material Hauling	0	0,000	0,000	0,000	0,000	0,000	0,000	0,000	0,000	0,000	0,000	0,000	0,000	0,000	0,000	0,000	0,000	0,000	0,000	0,000	0,000	0,000	0,000	0,000
Public Area - SW Pond	2026	Site Preparation	Vendor/Material Hauling	0	0,000	0,000	0,000	0,000	0,000	0,000	0,000	0,000	0,000	0,000	0,000	0,000	0,000	0,000	0,000	0,000	0,000	0,000	0,000	0,000	0,000	0,000	0,000
Unlined Area Excavation (3 of 3)	2026	Site Preparation	Vendor/Material Hauling	0	0,000	0,000	0,000	0,000	0,000	0,000	0,000	0,000	0,000	0,000	0,000	0,000	0,000	0,000	0,000	0,000	0,000	0,000	0,000	0,000	0,000	0,000	0,000
Landfill Construction3	2031	Site Preparation	Vendor/Material Hauling	0	0,000	0,000	0,000	0,000	0,000	0,000	0,000	0,000	0,000	0,000	0,000	0,000	0,000	0,000	0,000	0,000	0,000	0,000	0,000	0,000	0,000	0,000	0,000
Landfill Lining & Partial Closure4	2032	Site Preparation	Vendor/Material Hauling	0	0,000	0,000	0,000	0,000	0,000	0,000	0,000	0,000	0,000	0,000	0,000	0,000	0,000	0,000	0,000	0,000	0,000	0,000	0,000	0,000	0,000	0,000	0,000
Admin Building	2032	Site Preparation	Vendor/Material Hauling	0	0,000	0,000	0,000	0,000	0,000	0,000	0,000	0,000	0,000	0,000	0,000	0,000	0,000	0,000	0,000	0,000	0,000	0,000	0,000	0,000	0,000	0,000	0,000
Recovered Materials Storage	2032	Site Preparation	Vendor/Material Hauling	0	0,000	0,000	0,000	0,000	0,000	0,000	0,000	0,000	0,000	0,000	0,000	0,000	0,000	0,000	0,000	0,000	0,000	0,000	0,000	0,000	0,000	0,000	0,000
Shared Site Utilities	2032	Site Preparation	Vendor/Material Hauling	0	0,000	0,000	0,000	0,000	0,000	0,000	0,000	0,000	0,000	0,000	0,000	0,000	0,000	0,000	0,000	0,000	0,000	0,000	0,000	0,000	0,000	0,000	0,000
Main Entrance	2024	Grading	Vendor/Material Hauling	0	0,000	0,000	0,000	0,000	0,000	0,000	0,000	0,000	0,000	0,000	0,000	0,000	0,000	0,000	0,000	0,000	0,000	0,000	0,000	0,000	0,000	0,000	0,000
New SW Ponds	2024	Grading	Vendor/Material Hauling	0	0,000	0,000	0,000	0,000	0,000	0,000	0,000	0,000	0,000	0,000	0,000	0,000	0,000	0,000	0,000	0,000	0,000	0,000	0,000	0,000	0,000	0,000	0,000
Unlined Area Excavation (1 of 3)	2024	Grading	Vendor/Material Hauling	0	0,000	0,000	0,000	0,000	0,000	0,000	0,000	0,000	0,000	0,000	0,000	0,000	0,000	0,000	0,000	0,000	0,000	0,000	0,000	0,000	0,000	0,000	0,000
Stockpile Relocation	2024	Grading	Vendor/Material Hauling	0	0,000	0,000	0,000	0,000	0,000	0,000	0,000	0,000	0,000	0,000	0,000	0,000	0,000	0,000	0,000	0,000	0,000	0,000	0,000	0,000	0,000	0,000	0,000
Public Area	2026	Grading	Vendor/Material Hauling	0	0,000	0,000	0,000	0,000	0,000	0,000	0,000	0,000	0,000	0,000	0,000	0,000	0,000	0,000	0,000	0,000	0,000	0,000	0,000	0,000	0,000	0,000	0,000
Public Area - SW Pond	2026	Grading	Vendor/Material Hauling	0	0,000	0,000	0,000	0,000	0,000	0,000	0,000	0,000	0,000	0,000	0,000	0,000	0,000	0,000	0,000	0,000	0,000	0,000	0,000	0,000	0,000	0,000	0,000
Unlined Area Excavation (3 of 3)	2026	Grading	Vendor/Material Hauling	0	0,000	0,000	0,000	0,000	0,000	0,000	0,000	0,000	0,000	0,000	0,000	0,000	0,000	0,000	0,000	0,000	0,000	0,000	0,000	0,000	0,000	0,000	0,000
Landfill Construction3	2031	Grading	Vendor/Material Hauling	0	0,000	0,000	0,000	0,000	0,000	0,000	0,000	0,000	0,000	0,000	0,000	0,000	0,000	0,000	0,000	0,000	0,000	0,000	0,000	0,000	0,000	0,000	0,000
Landfill Lining & Partial Closure4	2032	Grading	Vendor/Material Hauling	0	0,000	0,000	0,000	0,000	0,000	0,000	0,000	0,000	0,000	0,000	0,000	0,000	0,000	0,000	0,000	0,000	0,000	0,000	0,000	0,000	0,000	0,000	0,000
Admin Building	2032	Grading	Vendor/Material Hauling	0	0,000	0,000	0,000	0,000	0,000	0,000	0,000	0,000	0,000	0,000	0,000	0,000	0,000	0,000	0,000	0,000	0,000	0,000	0,000	0,000	0,000	0,000	0,000
Recovered Materials Storage	2032	Grading	Vendor/Material Hauling	0	0,000	0,000	0,000	0,000	0,000	0,000	0,000	0,000	0,000	0,000	0,000	0,000	0,000	0,000	0,000	0,000	0,000	0,000	0,000	0,000	0,000	0,000	0,000
Shared Site Utilities	2032	Grading	Vendor/Material Hauling	0	0,000	0,000	0,000	0,000	0,000	0,000	0,000	0,000	0,000	0,000	0,000	0,000	0,000	0,000	0,000	0,000	0,000	0,000	0,000	0,000	0,000	0,000	0,000
Main Entrance	2024	Building Construction	Vendor/Material Hauling	0	0,000	0,000	0,000	0,000	0,000	0,000	0,000	0,000	0,000	0,000	0,000	0,000	0,000	0,000	0,000	0,000	0,000	0,000	0,000	0,000	0,000	0,000	0,000
New SW Ponds	2024	Building Construction	Vendor/Material Hauling	0	0,000	0,000	0,000	0,000	0,000	0,000	0,000	0,000	0,000	0,000	0,000	0,000	0,000	0,000	0,000	0,000	0,000	0,000	0,000	0,000	0,000	0,000	0,000
Unlined Area Excavation (1 of 3)	2024	Building Construction	Vendor/Material Hauling	0	0,000	0,000	0,000	0,000	0,000	0,000	0,000	0,000	0,000	0,000	0,000	0,000	0,000	0,000	0,000	0,000	0,000	0,000	0,000	0,000	0,000	0,000	0,000
Stockpile Relocation	2024	Building Construction	Vendor/Material Hauling	0	0,000	0,000	0,000	0,000	0,000	0,000	0,000	0,000	0,000	0,000	0,000	0,000	0,000	0,000	0,000	0,000	0,000	0,000	0,000	0,000	0,000	0,000	0,000
Public Area	2026	Building Construction	Vendor/Material Hauling	0	0,000	0,000	0,000	0,000	0,000	0,000	0,000	0,000	0,000	0,000	0,000	0,000	0,000	0,000	0,000	0,000	0,000	0,000	0,000	0,000	0,000	0,000	0,000
Public Area - SW Pond	2026	Building Construction	Vendor/Material Hauling	0	0,000	0,000	0,000	0,000	0,000	0,000	0,000	0,000	0,000	0,000	0,000	0,000	0,000	0,000	0,000	0,000	0,000	0,000	0,000	0,000	0,000	0,000	0,000
Unlined Area Excavation (3 of 3)	2026	Building Construction	Vendor/Material Hauling	0	0,000	0,000	0,000	0,000	0,000	0,000	0,000	0,000	0,000	0,000	0,000	0,000	0,000	0,000	0,000	0,000	0,000	0,000	0,000	0,000	0,000	0,000	0,000
Landfill Construction3	2031	Building Construction	Vendor/Material Hauling	0	0,000	0,000	0,000	0,000	0,000	0,000	0,000	0,000	0,000	0,000	0,000	0,000	0,000	0,000	0,000	0,000	0,000	0,000	0,000	0,000	0,000	0,000	0,000
Landfill Lining & Partial Closure4	2032	Building Construction	Vendor/Material Hauling	0	0,000	0,000	0,000	0,000	0,000	0,000	0,000	0,000	0,000	0,000	0,000	0,000	0,000	0,000	0,000	0,000	0,000	0,000	0,000	0,000	0,000	0,000	0,000
Admin Building	2032	Building Construction	Vendor/Material Hauling	0	0,000	0,000	0,000	0,000	0,000	0,000	0,000	0,000	0,000	0,000	0,000	0,000	0,000	0,000	0,000	0,000	0,000	0,000	0,000	0,000	0,000	0,000	0,000
Recovered Materials Storage	2032	Building Construction	Vendor/Material Hauling	0	0,000	0,000	0,000	0,000	0,000	0,000	0,000	0,000	0,000	0,000	0,000	0,000	0,000	0,000	0,000	0,000	0,000	0,000	0,000	0,000	0,000	0,000	0,000
Shared Site Utilities	2032	Building Construction	Vendor/Material Hauling	0	0,000	0,000	0,000	0,000	0,000	0,000	0,000	0,000	0,000	0,000	0,000	0,000	0,000	0,000	0,000	0,000	0,000	0,000	0,000	0,000	0,000	0,000	0,000
Main Entrance	2024	Paving - Asphalt	Vendor/Material Hauling	0	0,000	0,000	0,000	0,000	0,000	0,000	0,000	0,000	0,000	0,000	0,000	0,000	0,000	0,000	0,000	0,000	0,000	0,000	0,000	0,000	0,000	0,000	0,000
New SW Ponds	2024	Paving - Asphalt	Vendor/Material Hauling	0	0,000	0,000	0,000	0,000	0,000	0,000	0,000	0,000	0,000	0,000	0,000	0,000	0,000	0,000	0,000	0,000	0,000	0,000	0,000	0,000	0,000	0,000	0,000
Unlined Area Excavation (1 of 3)	2024	Paving - Asphalt	Vendor/Material Hauling	0	0,000	0,000	0,000	0,000	0,000	0,000	0,000	0,000	0,000	0,000	0,000	0,000	0,000	0,000	0,000	0,000	0,000	0,000	0,000	0,000	0,000	0,000	0,000
Stockpile Relocation	2024	Paving - Asphalt	Vendor/Material Hauling	0	0,000	0,000	0,000	0,000	0,000	0,000	0,000	0,000	0,000	0,000	0,000	0,000	0,000	0,000	0,000	0,000	0,000	0,000	0,000	0,000	0,000	0,000	0,000
Public Area	2026	Paving - Asphalt	Vendor/Material Hauling	0	0,000	0,000	0,000	0,000	0,000	0,000	0,000	0,000	0,000	0,000	0,000	0,000	0,000	0,000	0,000	0,000	0,000	0,000	0,000	0,000	0,000	0,000	0,000

WPWMA EIR
Construction Onroad Emissions
Plan Concept 2

Public Area - SW Pond	2026	Paving - Asphalt	Vendor/Material Hauling	0	0,000	0,000	0,000	0,000	0,000	0,000	0,000	0,000	0,000	0,000	0,000	0,000	0,000	0,000	0,000	0,000	0,000	0,000	0,000	0,000	0,000	0,000	0,000	0,000
Unlined Area Excavation (3 of 3)	2026	Paving - Asphalt	Vendor/Material Hauling	0	0,000	0,000	0,000	0,000	0,000	0,000	0,000	0,000	0,000	0,000	0,000	0,000	0,000	0,000	0,000	0,000	0,000	0,000	0,000	0,000	0,000	0,000	0,000	0,000
Landfill Construction3	2031	Paving - Asphalt	Vendor/Material Hauling	0	0,000	0,000	0,000	0,000	0,000	0,000	0,000	0,000	0,000	0,000	0,000	0,000	0,000	0,000	0,000	0,000	0,000	0,000	0,000	0,000	0,000	0,000	0,000	0,000
Landfill Lining & Partial Closure4	2032	Paving - Asphalt	Vendor/Material Hauling	0	0,000	0,000	0,000	0,000	0,000	0,000	0,000	0,000	0,000	0,000	0,000	0,000	0,000	0,000	0,000	0,000	0,000	0,000	0,000	0,000	0,000	0,000	0,000	0,000
Admin Building	2032	Paving - Asphalt	Vendor/Material Hauling	0	0,000	0,000	0,000	0,000	0,000	0,000	0,000	0,000	0,000	0,000	0,000	0,000	0,000	0,000	0,000	0,000	0,000	0,000	0,000	0,000	0,000	0,000	0,000	0,000
Recovered Materials Storage	2032	Paving - Asphalt	Vendor/Material Hauling	0	0,000	0,000	0,000	0,000	0,000	0,000	0,000	0,000	0,000	0,000	0,000	0,000	0,000	0,000	0,000	0,000	0,000	0,000	0,000	0,000	0,000	0,000	0,000	0,000
Shared Site Utilities	2032	Paving - Asphalt	Vendor/Material Hauling	0	0,000	0,000	0,000	0,000	0,000	0,000	0,000	0,000	0,000	0,000	0,000	0,000	0,000	0,000	0,000	0,000	0,000	0,000	0,000	0,000	0,000	0,000	0,000	0,000
Main Entrance	2024	Paving - Concrete	Vendor/Material Hauling	0	0,000	0,000	0,000	0,000	0,000	0,000	0,000	0,000	0,000	0,000	0,000	0,000	0,000	0,000	0,000	0,000	0,000	0,000	0,000	0,000	0,000	0,000	0,000	0,000
New SW Ponds	2024	Paving - Concrete	Vendor/Material Hauling	0	0,000	0,000	0,000	0,000	0,000	0,000	0,000	0,000	0,000	0,000	0,000	0,000	0,000	0,000	0,000	0,000	0,000	0,000	0,000	0,000	0,000	0,000	0,000	0,000
Unlined Area Excavation (1 of 3)	2024	Paving - Concrete	Vendor/Material Hauling	0	0,000	0,000	0,000	0,000	0,000	0,000	0,000	0,000	0,000	0,000	0,000	0,000	0,000	0,000	0,000	0,000	0,000	0,000	0,000	0,000	0,000	0,000	0,000	0,000
Stockpile Relocation	2024	Paving - Concrete	Vendor/Material Hauling	0	0,000	0,000	0,000	0,000	0,000	0,000	0,000	0,000	0,000	0,000	0,000	0,000	0,000	0,000	0,000	0,000	0,000	0,000	0,000	0,000	0,000	0,000	0,000	0,000
Public Area	2026	Paving - Concrete	Vendor/Material Hauling	0	0,000	0,000	0,000	0,000	0,000	0,000	0,000	0,000	0,000	0,000	0,000	0,000	0,000	0,000	0,000	0,000	0,000	0,000	0,000	0,000	0,000	0,000	0,000	0,000
Public Area - SW Pond	2026	Paving - Concrete	Vendor/Material Hauling	0	0,000	0,000	0,000	0,000	0,000	0,000	0,000	0,000	0,000	0,000	0,000	0,000	0,000	0,000	0,000	0,000	0,000	0,000	0,000	0,000	0,000	0,000	0,000	0,000
Unlined Area Excavation (3 of 3)	2026	Paving - Concrete	Vendor/Material Hauling	0	0,000	0,000	0,000	0,000	0,000	0,000	0,000	0,000	0,000	0,000	0,000	0,000	0,000	0,000	0,000	0,000	0,000	0,000	0,000	0,000	0,000	0,000	0,000	0,000
Landfill Construction3	2031	Paving - Concrete	Vendor/Material Hauling	0	0,000	0,000	0,000	0,000	0,000	0,000	0,000	0,000	0,000	0,000	0,000	0,000	0,000	0,000	0,000	0,000	0,000	0,000	0,000	0,000	0,000	0,000	0,000	0,000
Landfill Lining & Partial Closure4	2032	Paving - Concrete	Vendor/Material Hauling	0	0,000	0,000	0,000	0,000	0,000	0,000	0,000	0,000	0,000	0,000	0,000	0,000	0,000	0,000	0,000	0,000	0,000	0,000	0,000	0,000	0,000	0,000	0,000	0,000
Admin Building	2032	Paving - Concrete	Vendor/Material Hauling	0	0,000	0,000	0,000	0,000	0,000	0,000	0,000	0,000	0,000	0,000	0,000	0,000	0,000	0,000	0,000	0,000	0,000	0,000	0,000	0,000	0,000	0,000	0,000	0,000
Recovered Materials Storage	2032	Paving - Concrete	Vendor/Material Hauling	0	0,000	0,000	0,000	0,000	0,000	0,000	0,000	0,000	0,000	0,000	0,000	0,000	0,000	0,000	0,000	0,000	0,000	0,000	0,000	0,000	0,000	0,000	0,000	0,000
Shared Site Utilities	2032	Paving - Concrete	Vendor/Material Hauling	0	0,000	0,000	0,000	0,000	0,000	0,000	0,000	0,000	0,000	0,000	0,000	0,000	0,000	0,000	0,000	0,000	0,000	0,000	0,000	0,000	0,000	0,000	0,000	0,000
Main Entrance	2024	Site Preparation - Pond	Vendor/Material Hauling	0	0,000	0,000	0,000	0,000	0,000	0,000	0,000	0,000	0,000	0,000	0,000	0,000	0,000	0,000	0,000	0,000	0,000	0,000	0,000	0,000	0,000	0,000	0,000	0,000
New SW Ponds	2024	Site Preparation - Pond	Vendor/Material Hauling	0	0,000	0,000	0,000	0,000	0,000	0,000	0,000	0,000	0,000	0,000	0,000	0,000	0,000	0,000	0,000	0,000	0,000	0,000	0,000	0,000	0,000	0,000	0,000	0,000
Unlined Area Excavation (1 of 3)	2024	Site Preparation - Pond	Vendor/Material Hauling	0	0,000	0,000	0,000	0,000	0,000	0,000	0,000	0,000	0,000	0,000	0,000	0,000	0,000	0,000	0,000	0,000	0,000	0,000	0,000	0,000	0,000	0,000	0,000	0,000
Stockpile Relocation	2024	Site Preparation - Pond	Vendor/Material Hauling	0	0,000	0,000	0,000	0,000	0,000	0,000	0,000	0,000	0,000	0,000	0,000	0,000	0,000	0,000	0,000	0,000	0,000	0,000	0,000	0,000	0,000	0,000	0,000	0,000
Public Area	2026	Site Preparation - Pond	Vendor/Material Hauling	0	0,000	0,000	0,000	0,000	0,000	0,000	0,000	0,000	0,000	0,000	0,000	0,000	0,000	0,000	0,000	0,000	0,000	0,000	0,000	0,000	0,000	0,000	0,000	0,000
Public Area - SW Pond	2026	Site Preparation - Pond	Vendor/Material Hauling	0	0,000	0,000	0,000	0,000	0,000	0,000	0,000	0,000	0,000	0,000	0,000	0,000	0,000	0,000	0,000	0,000	0,000	0,000	0,000	0,000	0,000	0,000	0,000	0,000
Unlined Area Excavation (3 of 3)	2026	Site Preparation - Pond	Vendor/Material Hauling	0	0,000	0,000	0,000	0,000	0,000	0,000	0,000	0,000	0,000	0,000	0,000	0,000	0,000	0,000	0,000	0,000	0,000	0,000	0,000	0,000	0,000	0,000	0,000	0,000
Landfill Construction3	2031	Site Preparation - Pond	Vendor/Material Hauling	0	0,000	0,000	0,000	0,000	0,000	0,000	0,000	0,000	0,000	0,000	0,000	0,000	0,000	0,000	0,000	0,000	0,000	0,000	0,000	0,000	0,000	0,000	0,000	0,000
Landfill Lining & Partial Closure4	2032	Site Preparation - Pond	Vendor/Material Hauling	0	0,000	0,000	0,000	0,000	0,000	0,000	0,000	0,000	0,000	0,000	0,000	0,000	0,000	0,000	0,000	0,000	0,000	0,000	0,000	0,000	0,000	0,000	0,000	0,000
Admin Building	2032	Site Preparation - Pond	Vendor/Material Hauling	0	0,000	0,000	0,000	0,000	0,000	0,000	0,000	0,000	0,000	0,000	0,000	0,000	0,000	0,000	0,000	0,000	0,000	0,000	0,000	0,000	0,000	0,000	0,000	0,000
Recovered Materials Storage	2032	Site Preparation - Pond	Vendor/Material Hauling	0	0,000	0,000	0,000	0,000	0,000	0,000	0,000	0,000	0,000	0,000	0,000	0,000	0,000	0,000	0,000	0,000	0,000	0,000	0,000	0,000	0,000	0,000	0,000	0,000
Shared Site Utilities	2032	Site Preparation - Pond	Vendor/Material Hauling	0	0,000	0,000	0,000	0,000	0,000	0,000	0,000	0,000	0,000	0,000	0,000	0,000	0,000	0,000	0,000	0,000	0,000	0,000	0,000	0,000	0,000	0,000	0,000	0,000
Main Entrance	2024	Excavation	Vendor/Material Hauling	0	0,000	0,000	0,000	0,000	0,000	0,000	0,000	0,000	0,000	0,000	0,000	0,000	0,000	0,000	0,000	0,000	0,000	0,000	0,000	0,000	0,000	0,000	0,000	0,000
New SW Ponds	2024	Excavation	Vendor/Material Hauling	0	0,000	0,000	0,000	0,000	0,000	0,000	0,000	0,000	0,000	0,000	0,000	0,000	0,000	0,000	0,000	0,000	0,000	0,000	0,000	0,000	0,000	0,000	0,000	0,000
Unlined Area Excavation (1 of 3)	2024	Excavation	Vendor/Material Hauling	0	0,000	0,000	0,000	0,000	0,000	0,000	0,000	0,000	0,000	0,000	0,000	0,000	0,000	0,000	0,000	0,000	0,000	0,000	0,000	0,000	0,000	0,000	0,000	0,000
Stockpile Relocation	2024	Excavation	Vendor/Material Hauling	0	0,000	0,000	0,000	0,000	0,000	0,000	0,000	0,000	0,000	0,000	0,000	0,000	0,000	0,000	0,000	0,000	0,000	0,000	0,000	0,000	0,000	0,000	0,000	0,000
Public Area	2026	Excavation	Vendor/Material Hauling	0	0,000	0,000	0,000	0,000	0,000	0,000	0,000	0,000	0,000	0,000	0,000	0,000	0,000	0,000	0,000	0,000	0,000	0,000	0,000	0,000	0,000	0,000	0,000	0,000
Public Area - SW Pond	2026	Excavation	Vendor/Material Hauling	0	0,000	0,000	0,000	0,000	0,000	0,000	0,000	0,000	0,000	0,000	0,000	0,000	0,000	0,000	0,000	0,000	0,000	0,000	0,000	0,000	0,000	0,000	0,000	0,000
Unlined Area Excavation (3 of 3)	2026	Excavation	Vendor/Material Hauling	0	0,000	0,000	0,000	0,000	0,000	0,000	0,000	0,000	0,000	0,000	0,000	0,000	0,000	0,000	0,000	0,000	0,000	0,000	0,000	0,000	0,000	0,000	0,000	0,000
Landfill Construction3	2031	Excavation	Vendor/Material Hauling	0	0,000	0,000	0,000	0,000	0,000	0,000	0,000	0,000	0,000	0,000	0,000	0,000	0,000	0,000	0,000	0,000	0,000	0,000	0,000	0,000	0,000	0,000	0,000	0,000
Landfill Lining & Partial Closure4	2032	Excavation	Vendor/Material Hauling	0	0,000	0,000	0,000	0,000	0,000	0,000	0,000	0,000	0,000	0,000	0,000	0,000	0,000	0,000	0,000	0,000	0,000	0,000	0,000	0,000	0,000	0,000	0,000	0,000
Admin Building	2032	Excavation	Vendor/Material Hauling	0	0,000	0,000	0,000	0,000	0,000	0,000	0,000	0,000	0,000	0,000	0,000	0,000	0,000	0,000	0,000	0,000	0,000	0,000	0,000	0,000	0,000	0,000	0,000	0,000
Recovered Materials Storage	2032	Excavation	Vendor/Material Hauling	0	0,000	0,000	0,000	0,000	0,000	0,000	0,000	0,000	0,000	0,000	0,000	0,000	0,000	0,000	0,000	0,000	0,000	0,000	0,000	0,000	0,000	0,000	0,000	0,000
Shared Site Utilities	2032	Excavation	Vendor/Material Hauling	0	0,000	0,000	0,000	0,000	0,000	0,000	0,000	0,000	0,000	0,000	0,000	0,000	0,000	0,000	0,000	0,000	0,000	0,000	0,000	0,000	0,000	0,000	0,000	0,000
Main Entrance	2024	Lining and Partial Closure	Vendor/Material Hauling	0	0,000	0,000	0,000	0,000	0,000	0,000	0,000	0,000	0,000	0,000	0,000	0,000	0,000	0,000	0,000	0,000	0,000	0,000	0,000	0,000	0,000	0,000	0,000	0,000
New SW Ponds	2024	Lining and Partial Closure	Vendor/Material Hauling	0	0,000	0,000	0,000	0,000	0,000	0,000	0,000	0,000	0,000	0,000	0,000	0,000	0,000	0,000	0,000	0,000	0,000	0,000	0,000	0,000	0,000	0,000	0,000	0,000
Unlined Area Excavation (1 of 3)	2024	Lining and Partial Closure	Vendor/Material Hauling	0	0,000	0,000	0,000	0,000	0,000	0,000	0,000	0,000	0,000	0,000	0,000	0,000	0,000	0,000	0,000	0,000	0,000	0,000	0,000	0,000	0,000	0,000	0,000	0,000
Stockpile Relocation	2024	Lining and Partial Closure	Vendor/Material Hauling	0	0,000	0,000	0,000	0,000	0,000	0,000	0,000	0,000	0,000	0,000	0,000	0,000	0,000	0,000	0,000	0,000	0,000	0,000	0,000	0,000	0,000	0,000	0,000	0,000
Public Area	2026	Lining and Partial Closure	Vendor/Material Hauling	0	0,000	0,000	0,000	0,000	0,000	0,000	0,000	0,000	0,000	0,000	0,000	0,000	0,000	0,000	0,000	0,000	0,000	0,000	0,000	0,000	0,000	0,000	0,000	0,000
Public Area - SW Pond	2026	Lining and Partial Closure	Vendor/Material Hauling	0	0,000	0,000	0,000	0,000	0,000	0,000	0,000	0,000	0,000	0,000	0,000	0,000	0,000	0,000	0,000	0,000	0,000	0,000	0,000	0,000	0,000	0,000	0,000	0,000
Unlined Area Excavation (3 of 3)	2026	Lining and Partial Closure	Vendor/Material Hauling	0	0,000	0,000	0,000	0,000	0,000	0,000	0,000	0,000	0,000	0,000	0,000	0,000	0,000	0,000	0,000	0,000	0,000	0,000	0,000	0,000	0,000	0,000	0,000	0,000
Landfill Construction3	2031	Lining and Partial Closure	Vendor/Material Hauling	0	0,000	0,000	0,000	0,000	0,000	0,000	0,000	0,000	0,000	0,000	0,000	0,000	0,000	0,000	0,000	0,000	0,000	0,000	0,000	0,000	0,000	0,000	0,000	0,000
Landfill Lining & Partial Closure4	2032	Lining and Partial Closure	Vendor/Material Hauling	0	0,000	0,000	0,000	0,000	0,000	0,000	0,000	0,000	0,000	0,000	0,000	0,000	0,000	0,000	0,000	0,000	0,000	0,000	0,000	0,000	0,000	0,000	0,000	0,000
Admin Building	2032	Lining and Partial Closure	Vendor/Material Hauling	0	0,000	0,000	0,000	0,000	0,000	0,000	0,000	0,000	0,000	0,000	0,000	0,000	0,000	0,000	0,000	0,000	0,000	0,000	0,000	0,000	0,000	0,000	0,000	0,000
Recovered Materials Storage	2032	Lining and Partial Closure	Vendor/Material Hauling	0	0,000	0,000	0,000	0,000	0,000	0,000	0,000	0,000	0,000	0,000	0,000	0,000	0,000	0,000	0,000	0,000	0,000	0,000	0,000	0,000	0,000	0,000	0,000	0,000
Shared Site Utilities	2032	Lining and Partial Closure	Vendor/Material Hauling	0	0,000	0,000	0,000	0,000	0,000	0,000	0,000	0,000	0,000	0,000	0,000	0,000	0,000	0,000	0,000	0,000	0,000	0,000	0,000	0,000	0,000	0,000	0,000	0,000
Main Entrance	2024	Stockpile Movement	Vendor/Material Hauling	0	0,000	0,000	0,000	0,000	0,000	0,000	0,000	0,000	0,000	0,000	0,000	0,000	0,000	0,000	0,000	0,000	0,000	0,000	0,000	0,000	0,000	0,000	0,000	0,000
New SW Ponds	2024	Stockpile Movement	Vendor/Material Hauling	0	0,000	0,000	0,000	0,000	0,000	0,000	0,000	0,000	0,000	0,000	0,000	0,000	0,000	0,000	0,000	0,000	0,000	0,000	0,000	0,000	0,000	0,000	0,000	0,000
Unlined Area Excavation (1 of 3)	2024	Stockpile Movement	Vendor/Material Hauling	0	0,000	0,000	0,000	0,000	0,000	0,000	0,000	0,000	0,000	0,000	0,000	0,000	0,000	0,000	0,000	0,000	0,000	0,000	0,000	0,000	0,000	0,000	0,000	0,000
Stockpile Relocation	2024	Stockpile Movement	Vendor/Material Hauling	0	0,000	0,000	0,000	0,000	0,000	0,000	0,000	0,000	0,000	0,000	0,000	0,000	0,000	0,000	0,000	0,000	0,000	0,000	0,000	0,000	0,000	0,000	0,000	0,000
Public Area	2026	Stockpile Movement	Vendor/Material Hauling	0	0,000	0,000	0,000	0,000	0,000	0,000	0,000	0,000	0,000	0,000	0,000	0,000	0,000	0,000	0,000	0,000	0,000	0,000	0,000	0,000	0,000	0,000	0,000	0,000
Public Area - SW Pond	2026	Stockpile Movement	Vendor/Material Hauling	0	0,000	0,000	0,000	0,000	0,000	0,000	0,000	0,000	0,000	0,000	0,000	0,000	0,000	0,000	0,000	0,000	0,000	0,000	0,000	0,000	0,000	0,000	0,000	0,000
Unlined Area Excavation (3 of 3)	2026	Stockpile Movement	Vendor/Material Hauling	0	0,000	0,000	0,000	0,000	0,000	0,000	0,000	0,000	0,000	0,000	0,000	0,000	0,000	0,000	0,000	0,000	0,000	0,000	0,000	0,000	0,000	0,000	0,000	0,000
Landfill Construction3	2031	Stockpile Movement	Vendor/Material Hauling	0	0,000	0,000	0,000	0,000	0,000	0,000	0,000	0,000	0,000	0,000	0,000	0,000	0,000	0,000	0,000	0,000	0,000	0,000	0,000	0,000	0,000	0,000	0,000	0,000
Landfill Lining & Partial Closure4	2032	Stockpile Movement	Vendor/Material Hauling	0	0,000	0,000	0,000	0,000	0,000	0,000	0,000	0,000	0,000	0,000	0,000	0,000	0,000	0,000	0,000	0,000	0,000	0,000	0,000	0,000	0,000	0,000	0,000	0,000
Admin Building	2032	Stockpile Movement	Vendor/Material Hauling	0	0,000	0,000	0,000	0,000	0,000	0,000	0,000	0,000	0,000	0,000	0,000	0,000	0,000	0,000	0,000	0,000	0,000	0,000	0,000	0,000	0,000	0,000	0,000	0,000
Recovered Materials Storage	2032	Stockpile Movement	Vendor/Material Hauling	0	0,000	0,000	0,000	0,000	0,000	0,000	0,000	0,000	0,000	0,000	0,000	0,000	0,000	0,000	0,000	0,000	0,000	0,000	0,000	0,000	0,000	0,000	0,000	0,000
Shared Site Utilities	2032	Stockpile Movement	Vendor/Material Hauling	0	0,000	0,000	0,000	0,000	0,000	0,000	0,000	0,000	0,000	0,000	0,000	0,000	0,000	0,000	0,000	0,000	0,000	0,000	0,000	0,000	0,000	0,000	0,000	0,000

Notes:
[1] The following conversion factors were used to estimate emissions:
1 lb = 453,6 g

WPWMA EIR
Construction Onroad Emissions
Plan Concept 2

Maximum On-Road Vehicle Daily Emissions across all construction phases

Element	Year		Vehicle Type		Maximum Daily Emissions (lb/day) - across all construction phases: Exhaust Emissions (lbs/day) TOG	ROG	CO	NO_X	SO_X	PM_{10}	$PM_{2.5}$	CO_2	CH_4	N_2O	Fugitive Emissions PM_{10}	Fugitive Emissions $PM_{2.5}$	Maximum Daily Emissions (lb/day) - across all construction phases: Total Emissions (lbs/day) TOG	ROG	CO	NO_X	SO_X	PM_{10}	$PM_{2.5}$	CO_2	CH_4	N_2O
Main Entrance	2024		Worker Commute		0,000	0,000	0,000	0,000	0,000	0,000	0,000	0,000	0,000	0,000	0,000	0,000	0,000	0,000	0,000	0,000	0,000	0,000	0,000	0,000	0,000	0,000
New SW Ponds	2024		Worker Commute		0,000	0,000	0,000	0,000	0,000	0,000	0,000	0,000	0,000	0,000	0,000	0,000	0,000	0,000	0,000	0,000	0,000	0,000	0,000	0,000	0,000	0,000
Unlined Area Excavation (1 of 3)	2024		Worker Commute		0,000	0,000	0,000	0,000	0,000	0,000	0,000	0,000	0,000	0,000	0,000	0,000	0,000	0,000	0,000	0,000	0,000	0,000	0,000	0,000	0,000	0,000
Stockpile Relocation	2024		Worker Commute		0,000	0,000	0,000	0,000	0,000	0,000	0,000	0,000	0,000	0,000	0,000	0,000	0,000	0,000	0,000	0,000	0,000	0,000	0,000	0,000	0,000	0,000
Public Area	2026		Worker Commute		0,000	0,000	0,000	0,000	0,000	0,000	0,000	0,000	0,000	0,000	0,000	0,000	0,000	0,000	0,000	0,000	0,000	0,000	0,000	0,000	0,000	0,000
Public Area - SW Pond	2026		Worker Commute		0,000	0,000	0,000	0,000	0,000	0,000	0,000	0,000	0,000	0,000	0,000	0,000	0,000	0,000	0,000	0,000	0,000	0,000	0,000	0,000	0,000	0,000
Unlined Area Excavation (3 of 3)	2026		Worker Commute		0,000	0,000	0,000	0,000	0,000	0,000	0,000	0,000	0,000	0,000	0,000	0,000	0,000	0,000	0,000	0,000	0,000	0,000	0,000	0,000	0,000	0,000
Landfill Construction3	2031		Worker Commute		0,000	0,000	0,000	0,000	0,000	0,000	0,000	0,000	0,000	0,000	0,000	0,000	0,000	0,000	0,000	0,000	0,000	0,000	0,000	0,000	0,000	0,000
Landfill Lining & Partial Closure4	2032		Worker Commute		0,000	0,000	0,000	0,000	0,000	0,000	0,000	0,000	0,000	0,000	0,000	0,000	0,000	0,000	0,000	0,000	0,000	0,000	0,000	0,000	0,000	0,000
Admin Building	2032		Worker Commute		0,000	0,000	0,000	0,000	0,000	0,000	0,000	0,000	0,000	0,000	0,000	0,000	0,000	0,000	0,000	0,000	0,000	0,000	0,000	0,000	0,000	0,000
Recovered Materials Storage	2032		Worker Commute		0,000	0,000	0,000	0,000	0,000	0,000	0,000	0,000	0,000	0,000	0,000	0,000	0,000	0,000	0,000	0,000	0,000	0,000	0,000	0,000	0,000	0,000
Shared Site Utilities	2032		Worker Commute		0,000	0,000	0,000	0,000	0,000	0,000	0,000	0,000	0,000	0,000	0,000	0,000	0,000	0,000	0,000	0,000	0,000	0,000	0,000	0,000	0,000	0,000
Main Entrance	2024		Vendor/Material Hauling		0,000	0,000	0,000	0,000	0,000	0,000	0,000	0,000	0,000	0,000	0,000	0,000	0,000	0,000	0,000	0,000	0,000	0,000	0,000	0,000	0,000	0,000
New SW Ponds	2024		Vendor/Material Hauling		0,000	0,000	0,000	0,000	0,000	0,000	0,000	0,000	0,000	0,000	0,000	0,000	0,000	0,000	0,000	0,000	0,000	0,000	0,000	0,000	0,000	0,000
Unlined Area Excavation (1 of 3)	2024		Vendor/Material Hauling		0,000	0,000	0,000	0,000	0,000	0,000	0,000	0,000	0,000	0,000	0,000	0,000	0,000	0,000	0,000	0,000	0,000	0,000	0,000	0,000	0,000	0,000
Stockpile Relocation	2024		Vendor/Material Hauling		0,000	0,000	0,000	0,000	0,000	0,000	0,000	0,000	0,000	0,000	0,000	0,000	0,000	0,000	0,000	0,000	0,000	0,000	0,000	0,000	0,000	0,000
Public Area	2026		Vendor/Material Hauling		0,000	0,000	0,000	0,000	0,000	0,000	0,000	0,000	0,000	0,000	0,000	0,000	0,000	0,000	0,000	0,000	0,000	0,000	0,000	0,000	0,000	0,000
Public Area - SW Pond	2026		Vendor/Material Hauling		0,000	0,000	0,000	0,000	0,000	0,000	0,000	0,000	0,000	0,000	0,000	0,000	0,000	0,000	0,000	0,000	0,000	0,000	0,000	0,000	0,000	0,000
Unlined Area Excavation (3 of 3)	2026		Vendor/Material Hauling		0,000	0,000	0,000	0,000	0,000	0,000	0,000	0,000	0,000	0,000	0,000	0,000	0,000	0,000	0,000	0,000	0,000	0,000	0,000	0,000	0,000	0,000
Landfill Construction3	2031		Vendor/Material Hauling		0,000	0,000	0,000	0,000	0,000	0,000	0,000	0,000	0,000	0,000	0,000	0,000	0,000	0,000	0,000	0,000	0,000	0,000	0,000	0,000	0,000	0,000
Landfill Lining & Partial Closure4	2032		Vendor/Material Hauling		0,000	0,000	0,000	0,000	0,000	0,000	0,000	0,000	0,000	0,000	0,000	0,000	0,000	0,000	0,000	0,000	0,000	0,000	0,000	0,000	0,000	0,000
Admin Building	2032		Vendor/Material Hauling		0,000	0,000	0,000	0,000	0,000	0,000	0,000	0,000	0,000	0,000	0,000	0,000	0,000	0,000	0,000	0,000	0,000	0,000	0,000	0,000	0,000	0,000
Recovered Materials Storage	2032		Vendor/Material Hauling		0,000	0,000	0,000	0,000	0,000	0,000	0,000	0,000	0,000	0,000	0,000	0,000	0,000	0,000	0,000	0,000	0,000	0,000	0,000	0,000	0,000	0,000
Shared Site Utilities	2032		Vendor/Material Hauling		0,000	0,000	0,000	0,000	0,000	0,000	0,000	0,000	0,000	0,000	0,000	0,000	0,000	0,000	0,000	0,000	0,000	0,000	0,000	0,000	0,000	0,000

Note: Assumes element and associated stormwater pond are built concurrently, as opposed to sequentially.

Total Maximum On-Road Vehicle Daily Emissions across all construction phases (worker commute + vendor/material

Element	Year		Maximum Daily Emissions (lb/day) - across all construction phases: Exhaust Emissions (lbs/day) TOG	ROG	CO	NO_X	SO_X	PM_{10}	$PM_{2.5}$	CO_2	CH_4	N_2O	Fugitive Emissions PM_{10}	Fugitive Emissions $PM_{2.5}$	Maximum Daily Emissions (lb/day) - across all construction phases: Total Emissions (lbs/day) TOG	ROG	CO	NO_X	SO_X	PM_{10}	$PM_{2.5}$	CO_2	CH_4	N_2O
Main Entrance	2024		0,000	0,000	0,000	0,000	0,000	0,000	0,000	0,000	0,000	0,000	0,000	0,000	0,000	0,000	0,000	0,000	0,000	0,000	0,000	0,000	0,000	0,000
New SW Ponds	2024		0,000	0,000	0,000	0,000	0,000	0,000	0,000	0,000	0,000	0,000	0,000	0,000	0,000	0,000	0,000	0,000	0,000	0,000	0,000	0,000	0,000	0,000
Unlined Area Excavation (1 of 3)	2024		0,000	0,000	0,000	0,000	0,000	0,000	0,000	0,000	0,000	0,000	0,000	0,000	0,000	0,000	0,000	0,000	0,000	0,000	0,000	0,000	0,000	0,000
Stockpile Relocation	2024		0,000	0,000	0,000	0,000	0,000	0,000	0,000	0,000	0,000	0,000	0,000	0,000	0,000	0,000	0,000	0,000	0,000	0,000	0,000	0,000	0,000	0,000
Public Area	2026		0,000	0,000	0,000	0,000	0,000	0,000	0,000	0,000	0,000	0,000	0,000	0,000	0,000	0,000	0,000	0,000	0,000	0,000	0,000	0,000	0,000	0,000
Public Area - SW Pond	2026		0,000	0,000	0,000	0,000	0,000	0,000	0,000	0,000	0,000	0,000	0,000	0,000	0,000	0,000	0,000	0,000	0,000	0,000	0,000	0,000	0,000	0,000
Unlined Area Excavation (3 of 3)	2026		0,000	0,000	0,000	0,000	0,000	0,000	0,000	0,000	0,000	0,000	0,000	0,000	0,000	0,000	0,000	0,000	0,000	0,000	0,000	0,000	0,000	0,000
Landfill Construction3	2031		0,000	0,000	0,000	0,000	0,000	0,000	0,000	0,000	0,000	0,000	0,000	0,000	0,000	0,000	0,000	0,000	0,000	0,000	0,000	0,000	0,000	0,000
Landfill Lining & Partial Closure4	2032		0,000	0,000	0,000	0,000	0,000	0,000	0,000	0,000	0,000	0,000	0,000	0,000	0,000	0,000	0,000	0,000	0,000	0,000	0,000	0,000	0,000	0,000
Admin Building	2032		0,000	0,000	0,000	0,000	0,000	0,000	0,000	0,000	0,000	0,000	0,000	0,000	0,000	0,000	0,000	0,000	0,000	0,000	0,000	0,000	0,000	0,000
Recovered Materials Storage	2032		0,000	0,000	0,000	0,000	0,000	0,000	0,000	0,000	0,000	0,000	0,000	0,000	0,000	0,000	0,000	0,000	0,000	0,000	0,000	0,000	0,000	0,000
Shared Site Utilities	2032		0,000	0,000	0,000	0,000	0,000	0,000	0,000	0,000	0,000	0,000	0,000	0,000	0,000	0,000	0,000	0,000	0,000	0,000	0,000	0,000	0,000	0,000

Maximum Daily On-Road Vehicle Emissions per Construction Year

Year		Maximum Daily Emissions (lb/day) - across all construction phases: Exhaust Emissions (lbs/day) TOG	ROG	CO	NO_X	SO_X	PM_{10}	$PM_{2.5}$	CO_2	CH_4	N_2O	Fugitive Emissions PM_{10}	Fugitive Emissions $PM_{2.5}$	Maximum Daily Emissions (lb/day) - across all construction phases: Total Emissions (lbs/day) TOG	ROG	CO	NO_X	SO_X	PM_{10}	$PM_{2.5}$	CO_2	CH_4	N_2O
2024		0,000	0,000	0,000	0,000	0,000	0,000	0,000	0,000	0,000	0,000	0,000	0,000	0,000	0,000	0,000	0,000	0,000	0,000	0,000	0,000	0,000	0,000
2026		0,000	0,000	0,000	0,000	0,000	0,000	0,000	0,000	0,000	0,000	0,000	0,000	0,000	0,000	0,000	0,000	0,000	0,000	0,000	0,000	0,000	0,000
2031		0,000	0,000	0,000	0,000	0,000	0,000	0,000	0,000	0,000	0,000	0,000	0,000	0,000	0,000	0,000	0,000	0,000	0,000	0,000	0,000	0,000	0,000
2032		0,000	0,000	0,000	0,000	0,000	0,000	0,000	0,000	0,000	0,000	0,000	0,000	0,000	0,000	0,000	0,000	0,000	0,000	0,000	0,000	0,000	0,000

Total Annual GHG (lb/yr)

Year	CO2	CH4	N_2O
2024	0	0,00	0,00
2026	0	0,00	0,00
2031	0	0,00	0,00
2032	0	0,00	0,00

WPWMA EIR
Construction Emissions - Proposed Project Fugitive Emissions From Activities
Plan Concept 1

= manual input

Grading Assumptions

Equipment Type	Acres/8hr-day
Rubber Tired Dozers	0,5
Concrete/Industrial Saws	0
Crawler Tractors	0,5
Graders	0,5
Excavators	0
Scrapers	1

Variable	Value	Unit	
Mean Vehicle Speed, S	7,1	mph	AP-42 default is 7.1 mph
PM2.5 Scaling Factor, $F_{PM2.5}$	0,031		AP-42 default is 0.031
PM10 Scaling Factor, F_{PM10}	0,6		AP-42 default is 0.6
Blade Width	12	ft	CalEEMod default is 12 ft based on CAT 140 Motor Grader
Emission Factor PM15, EF_{PM15}	2,571	lb/VMT	$EF_{PM15} = 0.051 \times (S)^{2.0}$
Emission Factor TSP, EF_{TSP}	5,373	lb/VMT	$EF_{TSP} = 0.04 \times (S)^{2.5}$
Emission Factor PM10, EF_{PM10}	1,543	lb/VMT	$EF_{PM10} = EF_{PM15} \times F_{PM10}$
Emission Factor PM2.5, $EF_{PM2.5}$	0,167	lb/VMT	$EF_{PM2.5} = EF_{TSP} \times F_{PM2.5}$
			E = EF x VMT

	Number of Equipment in Grading Phase											
Equipment Type	Public Area	Public Area - SW Pond	Western Entrance	Shared Site Utilities	Compost Facility	Compost Facility - SW Pond	Landfill Construction	Landfill Lining & Partial Closure	Recovered Materials Storage	HHW Storage	Primary Maintenance Facility	Stockpile Relocation
Rubber Tired Dozers	1	N/A	1	1	1	N/A	1	2	1	1	1	0
Concrete/Industrial Saws	0	N/A	0	0	0	N/A	0	0	0	1	0	0
Tractors/Loaders/Backhoes	2	N/A	1	1	2	N/A	2	2	1	2	1	0
Graders	1	N/A	1	1	1	N/A	1	1	1	0	1	0
Excavators	2	N/A	0	0	2	N/A	2	1	0	0	0	0
Scrapers	2	N/A	0	0	2	N/A	2	3	0	0	0	0

Note: Landfill Lining & Partial Closure column shows number of equipment for Lining & Partial Closure phase, not Grading phase.

		Maximum Daily Emissions (lb/day) - across all construction phases					
		Uncontrolled Emissions			Controlled Emissions		
Element	Year	PM_{10}	$PM_{2.5}$	ROG	PM_{10}	$PM_{2.5}$	ROG
Public Area	2024	11,40	15,74	1,18	2,85	3,93	1,18
Public Area - SW Pond	2024	3,32	4,59	0,00	0,83	1,15	0,00
Western Entrance	2024	3,32	4,59	0,52	0,83	1,15	0,52
Shared Site Utilities	2024	3,32	4,59	0,00	0,83	1,15	0,00
Compost Facility	2025	11,40	15,74	0,00	2,85	3,93	0,00
Compost Facility - SW Pond	2025	11,40	15,74	0,00	2,85	3,93	0,00
Landfill Construction	2028	11,40	15,74	0,00	2,85	3,93	0,00
Landfill Lining & Partial Closure	2029	7,60	10,49	0,00	1,90	2,62	0,00
Recovered Materials Storage	2029	3,32	4,59	0,26	0,83	1,15	0,26
HHW Storage	2029	1,59	0,17	0,00	0,40	0,04	0,00
Primary Maintenance Facility	2033	3,32	4,59	0,52	0,83	1,15	0,52
Stockpile Relocation	2033	0,61	0,09	0,00	0,15	0,02	0,00

Note: Assumes element and associated stormwater pond are built concurrently, as opposed to sequentially.

	Maximum Daily Emissions (lb/day) - across all construction phases					
	Uncontrolled Emissions			Controlled Emissions		
Year	PM_{10}	$PM_{2.5}$	ROG	PM_{10}	$PM_{2.5}$	ROG
2024	21,37	29,51	1,70	5,34	7,38	1,70
2025	22,80	31,48	0,00	5,70	7,87	0,00
2028	11,40	15,74	0,00	2,85	3,93	0,00
2029	12,51	15,26	0,26	3,13	3,81	0,26
2033	3,93	4,68	0,52	0,98	1,17	0,52

WPWMA EIR
Construction Emissions - Proposed Project Fugitive Emissions From Activities
Plan Concept 1

Bulldozing Assumptions

Variable	Value	Unit	
C (TSP)	5,7		AP-42 constant for overburden
C (PM15)	1		AP-42 constant for overburden
Material Moisture Content, M	7,90%		AP-42 constant for overburden
Material Silt Content, s	6,90%		AP-42 constant for overburden
PM10 Scaling Factor, F_{PM10}	0,75		AP-42 constant for overburden
PM2.5 Scaling Factor, $F_{PM2.5}$	0,105		AP-42 constant for overburden
Emission Factor PM15, EF_{PM15}	0,633	lb/hr	$EF_{PM15} = (C_{PM15} \times s^{1.5}) / M^{1.4}$
Emission Factor TSP, EF_{TSP}	6,246	lb/hr	$EF_{TSP} = (C_{TSP} \times s^{1.2}) / M^{1.3}$
Emission Factor PM10, EF_{PM10}	0,475	lb/hr	$EF_{PM10} = EF_{PM15} \times F_{PM10}$
Emission Factor PM2.5, $EF_{PM2.5}$	0,656	lb/hr	$EF_{PM2.5} = EF_{TSP} \times F_{PM2.5}$
			E = EF x Hr

	Number of Equipment-Hours Per Day in Site Preparation Phase											
Equipment Type	Public Area	Public Area - SW Pond	Western Entrance	Shared Site Utilities	Compost Facility	Compost Facility - SW Pond	Landfill Construction	Landfill Lining & Partial Closure	Recovered Materials Storage	HHW Storage	Primary Maintenance Facility	Stockpile Relocation
Graders	0	8	8	8	0	0	0	8	8	8	8	0
Tractors/Loaders/Backhoes	32	8	8	8	32	32	32	12	8	8	8	0
Rubber Tired Dozers	24	7	7	7	24	24	24	16	7	0	7	0
Scrapers	0	0	0	0	0	0	0	24	0	0	0	0

Note: Landfill Lining & Partial Closure column shows equipment-hours for Lining & Partial Closure phase, not Site Preparation phase.

Truck Loading Assumptions

Variable	Value	Unit	
Particle size multiplier, $k_{PM2.5}$	0,053		AP-42 default is 0.053
Particle size multiplier, k_{PM10}	0,35		AP-42 default is 0.35
Wind speed, U	4,917	mph	Based on CalEEMod default of 2.2 m/s for Placer County - Sacramento
Material moisture content, M	12	%	AP-42 default is 12%
Density	1,264	tons/cy	Based on CalEEMod assumption of 1.264 tons per cubic yard
Emission Factor PM2.5, $EF_{PM2.5}$	1,35E-05	lb/ton	$EF_{PM2.5} = k \times (0.0032) \times [(U/5)^{1.3} / (M/2)^{1.4}]$
Emission Factor PM10, EF_{PM10}	8,92E-05	lb/ton	$EF_{PM10} = k \times (0.0032) \times [(U/5)^{1.3} / (M/2)^{1.4}]$
			E = EF x Throughput

Throughput	Public Area	Public Area - SW Pond	Western Entrance	Shared Site Utilities	Compost Facility	Compost Facility - SW Pond	Landfill Construction	Landfill Lining & Partial Closure	Recovered Materials Storage	HHW Storage	Primary Maintenance Facility	Stockpile Relocation
Excavation Volume (cy)	0	9 735	0	16 000	0	31 241	1 835 000	131 750	0	0	0	1 400 000
Excavation Days (days)	0	1	0	2	0	3	175	13	0	0	0	260

Asphalt Paving Assumptions

Variable	Value	Unit	
Emission Factor ROG, EF_{ROG}	2,62	lb/ac	CalEEMod uses SMAQMD default of 2.62 lb/ac
			E = EF x Area

Asphalt	Public Area	Public Area - SW Pond	Western Entrance	Shared Site Utilities	Compost Facility	Compost Facility - SW Pond	Landfill Construction	Landfill Lining & Partial Closure	Recovered Materials Storage	HHW Storage	Primary Maintenance Facility	Stockpile Relocation
Paved Asphalt Area (ac)	9	0	2	0	0	0	0	0	1	0	2	0
Paving Days (days)	20	0	10	0	0	0	0	0	10	0	10	0

General Assumptions

Construction Schedule	Operational Schedule	Unit
8	8	hr/day
5	5	days/week
4	(52 weeks / yr)	weeks/month

Control Measures

Measure	Control Efficiency	Applicable Source	Reference
Apply water every 3 hours to distrubed areas within construction site.	75,00%	Watering of fugitve dust activity	Sacramento Metropolitan Air Quality Management District (SMAQMD). 2015. CEQA Guide. June.
Total Control Efficiency	75,00%	Excavation / Grading	

WPWMA EIR
Construction Emissions - Proposed Project Fugitive Emissions From Activities
Plan Concept 1

Public Area

Schedule (days/yr)	Year
260	2024

		Fugitive Particulate Emissions						ROG Emissions			Controlled Emissions: Fugitive Particulate Emissions						Controlled Emissions: ROG Emissions		
		(lb/day)		(lb/hr)		(lb/yr)		(lb/day)	(lb/hr)	(lb/yr)	(lb/day)		(lb/hr)		(lb/yr)		(lb/day)	(lb/hr)	(lb/yr)
Activity	Max. Activity per day	PM_{10}	$PM_{2.5}$	PM_{10}	$PM_{2.5}$	PM_{10}	$PM_{2.5}$	ROG	ROG	ROG	PM_{10}	$PM_{2.5}$	PM_{10}	$PM_{2.5}$	PM_{10}	$PM_{2.5}$	ROG	ROG	ROG
Grading (acres/day)	4,0	4,24	0,46	0,53	0,06	1 102,92	119,09	0,00	0,00	0,00	1,06	0,11	0,13	0,01	275,73	29,77	0,00	0,00	0,00
Bulldozing (hr/day)	24	11,40	15,74	1,42	1,97	2 963,75	4 092,16	0,00	0,00	0,00	2,85	3,93	0,36	0,49	740,94	1 023,04	0,00	0,00	0,00
Truck Loading (cy/day)	0	0,00	0,00	0,00	0,00	0,00	0,00	0,00	0,00	0,00	0,00	0,00	0,00	0,00	0,00	0,00	0,00	0,00	0,00
Paving (acres/day)	0,5	N/A	N/A	N/A	N/A	N/A	N/A	1,18	0,15	306,54	N/A	N/A	N/A	N/A	N/A	N/A	N/A	N/A	N/A
Total [13]		**15,64**	**16,20**	**1,96**	**2,02**	**4 066,67**	**4 211,25**	**1,18**	**0,15**	**306,54**	**3,91**	**4,05**	**0,49**	**0,51**	**1 016,67**	**1 052,81**	**N/A**	**N/A**	**N/A**

Public Area - SW Pond

Schedule (days/yr)	Year
260	2024

		Fugitive Particulate Emissions						ROG Emissions			Controlled Emissions: Fugitive Particulate Emissions						Controlled Emissions: ROG Emissions		
		(lb/day)		(lb/hr)		(lb/yr)		(lb/day)	(lb/hr)	(lb/yr)	(lb/day)		(lb/hr)		(lb/yr)		(lb/day)	(lb/hr)	(lb/yr)
Activity	Max. Activity per day	PM_{10}	$PM_{2.5}$	PM_{10}	$PM_{2.5}$	PM_{10}	$PM_{2.5}$	ROG	ROG	ROG	PM_{10}	$PM_{2.5}$	PM_{10}	$PM_{2.5}$	PM_{10}	$PM_{2.5}$	ROG	ROG	ROG
Grading (acres/day)	0,0	0,00	0,00	0,00	0,00	0,00	0,00	0,00	0,00	0,00	0,00	0,00	0,00	0,00	0,00	0,00	0,00	0,00	0,00
Bulldozing (hr/day)	7	3,32	4,59	0,42	0,57	864,43	1 193,55	0,00	0,00	0,00	0,83	1,15	0,10	0,14	216,11	298,39	0,00	0,00	0,00
Truck Loading (cy/day)	9 735	1,10	0,17	0,14	0,02	285,43	43,22	0,00	0,00	0,00	0,27	0,04	0,03	0,01	71,36	10,81	0,00	0,00	0,00
Paving (acres/day)	0,0	N/A	N/A	N/A	N/A	N/A	N/A	0,00	0,00	0,00	N/A	N/A	N/A	N/A	N/A	N/A	N/A	N/A	N/A
Total [13]		**4,42**	**4,76**	**0,55**	**0,59**	**1 149,86**	**1 236,77**	**0,00**	**0,00**	**0,00**	**1,11**	**1,19**	**0,14**	**0,15**	**287,46**	**309,19**	**N/A**	**N/A**	**N/A**

Western Entrance

Schedule (days/yr)	Year
260	2024

		Fugitive Particulate Emissions						ROG Emissions			Controlled Emissions: Fugitive Particulate Emissions						Controlled Emissions: ROG Emissions		
		(lb/day)		(lb/hr)		(lb/yr)		(lb/day)	(lb/hr)	(lb/yr)	(lb/day)		(lb/hr)		(lb/yr)		(lb/day)	(lb/hr)	(lb/yr)
Activity	Max. Activity per day	PM_{10}	$PM_{2.5}$	PM_{10}	$PM_{2.5}$	PM_{10}	$PM_{2.5}$	ROG	ROG	ROG	PM_{10}	$PM_{2.5}$	PM_{10}	$PM_{2.5}$	PM_{10}	$PM_{2.5}$	ROG	ROG	ROG
Grading (acres/day)	1,5	1,59	0,17	0,20	0,02	413,60	44,66	0,00	0,00	0,00	0,40	0,04	0,05	0,01	103,40	11,16	0,00	0,00	0,00
Bulldozing (hr/day)	7	3,32	4,59	0,42	0,57	864,43	1 193,55	0,00	0,00	0,00	0,83	1,15	0,10	0,14	216,11	298,39	0,00	0,00	0,00
Truck Loading (cy/day)	0	0,00	0,00	0,00	0,00	0,00	0,00	0,00	0,00	0,00	0,00	0,00	0,00	0,00	0,00	0,00	0,00	0,00	0,00
Paving (acres/day)	0,2	N/A	N/A	N/A	N/A	N/A	N/A	0,52	0,07	136,24	N/A	N/A	N/A	N/A	N/A	N/A	N/A	N/A	N/A
Total [13]		**4,92**	**4,76**	**0,61**	**0,60**	**1 278,02**	**1 238,20**	**0,52**	**0,07**	**136,24**	**1,23**	**1,19**	**0,15**	**0,15**	**319,51**	**309,55**	**N/A**	**N/A**	**N/A**

Shared Site Utilities

Schedule (days/yr)	Year
260	2024

		Fugitive Particulate Emissions						ROG Emissions			Controlled Emissions: Fugitive Particulate Emissions						Controlled Emissions: ROG Emissions		
		(lb/day)		(lb/hr)		(lb/yr)		(lb/day)	(lb/hr)	(lb/yr)	(lb/day)		(lb/hr)		(lb/yr)		(lb/day)	(lb/hr)	(lb/yr)
Activity	Max. Activity per day	PM_{10}	$PM_{2.5}$	PM_{10}	$PM_{2.5}$	PM_{10}	$PM_{2.5}$	ROG	ROG	ROG	PM_{10}	$PM_{2.5}$	PM_{10}	$PM_{2.5}$	PM_{10}	$PM_{2.5}$	ROG	ROG	ROG
Grading (acres/day)	1,5	1,59	0,17	0,20	0,02	413,60	44,66	0,00	0,00	0,00	0,40	0,04	0,05	0,01	103,40	11,16	0,00	0,00	0,00
Bulldozing (hr/day)	7	3,32	4,59	0,42	0,57	864,43	1 193,55	0,00	0,00	0,00	0,83	1,15	0,10	0,14	216,11	298,39	0,00	0,00	0,00
Truck Loading (cy/day)	8 000	0,90	0,14	0,11	0,02	234,56	35,52	0,00	0,00	0,00	0,23	0,03	0,03	0,00	58,64	8,88	0,00	0,00	0,00
Paving (acres/day)	0,0	N/A	N/A	N/A	N/A	N/A	N/A	0,00	0,00	0,00	N/A	N/A	N/A	N/A	N/A	N/A	N/A	N/A	N/A
Total [13]		**5,82**	**4,90**	**0,73**	**0,61**	**1 512,58**	**1 273,72**	**0,00**	**0,00**	**0,00**	**1,45**	**1,22**	**0,18**	**0,15**	**378,15**	**318,43**	**N/A**	**N/A**	**N/A**

Compost Facility

Schedule (days/yr)	Year
260	2025

		Fugitive Particulate Emissions						ROG Emissions			Controlled Emissions: Fugitive Particulate Emissions						Controlled Emissions: ROG Emissions		
		(lb/day)		(lb/hr)		(lb/yr)		(lb/day)	(lb/hr)	(lb/yr)	(lb/day)		(lb/hr)		(lb/yr)		(lb/day)	(lb/hr)	(lb/yr)
Activity	Max. Activity per day	PM_{10}	$PM_{2.5}$	PM_{10}	$PM_{2.5}$	PM_{10}	$PM_{2.5}$	ROG	ROG	ROG	PM_{10}	$PM_{2.5}$	PM_{10}	$PM_{2.5}$	PM_{10}	$PM_{2.5}$	ROG	ROG	ROG
Grading (acres/day)	4,0	4,24	0,46	0,53	0,06	1 102,92	119,09	0,00	0,00	0,00	1,06	0,11	0,13	0,01	275,73	29,77	0,00	0,00	0,00
Bulldozing (hr/day)	24	11,40	15,74	1,42	1,97	2 963,75	4 092,16	0,00	0,00	0,00	2,85	3,93	0,36	0,49	740,94	1 023,04	0,00	0,00	0,00
Truck Loading (cy/day)	0	0,00	0,00	0,00	0,00	0,00	0,00	0,00	0,00	0,00	0,00	0,00	0,00	0,00	0,00	0,00	0,00	0,00	0,00
Paving (acres/day)	0,0	N/A	N/A	N/A	N/A	N/A	N/A	0,00	0,00	0,00	N/A	N/A	N/A	N/A	N/A	N/A	N/A	N/A	N/A
Total [13]		**15,64**	**16,20**	**1,96**	**2,02**	**4 066,67**	**4 211,25**	**0,00**	**0,00**	**0,00**	**3,91**	**4,05**	**0,49**	**0,51**	**1 016,67**	**1 052,81**	**N/A**	**N/A**	**N/A**

WPWMA EIR
Construction Emissions - Proposed Project Fugitive Emissions From Activities
Plan Concept 1

Compost Facility - SW Pond

Schedule (days/yr)	Year
260	2025

		Fugitive Particulate Emissions						ROG Emissions			Controlled Emissions: Fugitive Particulate Emissions						Controlled Emissions: ROG Emissions		
		(lb/day)		(lb/hr)		(lb/yr)		(lb/day)	(lb/hr)	(lb/yr)	(lb/day)		(lb/hr)		(lb/yr)		(lb/day)	(lb/hr)	(lb/yr)
Activity	Max. Activity per day	PM_{10}	$PM_{2.5}$	PM_{10}	$PM_{2.5}$	PM_{10}	$PM_{2.5}$	ROG	ROG	ROG	PM_{10}	$PM_{2.5}$	PM_{10}	$PM_{2.5}$	PM_{10}	$PM_{2.5}$	ROG	ROG	ROG
Grading (acres/day)	0,0	0,00	0,00	0,00	0,00	0,00	0,00	0,00	0,00	0,00	0,00	0,00	0,00	0,00	0,00	0,00	0,00	0,00	0,00
Bulldozing (hr/day)	24	11,40	15,74	1,42	1,97	2 963,75	4 092,16	0,00	0,00	0,00	2,85	3,93	0,36	0,49	740,94	1 023,04	0,00	0,00	0,00
Truck Loading (cy/day)	10 414	1,17	0,18	0,15	0,02	305,33	46,24	0,00	0,00	0,00	0,29	0,04	0,04	0,01	76,33	11,56	0,00	0,00	0,00
Paving (acres/day)	0,0	N/A	N/A	N/A	N/A	N/A	N/A	0,00	0,00	0,00	N/A	N/A	N/A	N/A	N/A	N/A	N/A	N/A	N/A
Total [13]		**12,57**	**15,92**	**1,57**	**1,99**	**3 269,08**	**4 138,39**	**0,00**	**0,00**	**0,00**	**3,14**	**3,98**	**0,39**	**0,50**	**817,27**	**1 034,60**	**N/A**	**N/A**	**N/A**

Landfill Construction

Schedule (days/yr)	Year
260	2028

		Fugitive Particulate Emissions						ROG Emissions			Controlled Emissions: Fugitive Particulate Emissions						Controlled Emissions: ROG Emissions		
		(lb/day)		(lb/hr)		(lb/yr)		(lb/day)	(lb/hr)	(lb/yr)	(lb/day)		(lb/hr)		(lb/yr)		(lb/day)	(lb/hr)	(lb/yr)
Activity	Max. Activity per day	PM_{10}	$PM_{2.5}$	PM_{10}	$PM_{2.5}$	PM_{10}	$PM_{2.5}$	ROG	ROG	ROG	PM_{10}	$PM_{2.5}$	PM_{10}	$PM_{2.5}$	PM_{10}	$PM_{2.5}$	ROG	ROG	ROG
Grading (acres/day)	4,0	4,24	0,46	0,53	0,06	1 102,92	119,09	0,00	0,00	0,00	1,06	0,11	0,13	0,01	275,73	29,77	0,00	0,00	0,00
Bulldozing (hr/day)	24	11,40	15,74	1,42	1,97	2 963,75	4 092,16	0,00	0,00	0,00	2,85	3,93	0,36	0,49	740,94	1 023,04	0,00	0,00	0,00
Truck Loading (cy/day)	10 486	1,18	0,18	0,15	0,02	307,44	46,56	0,00	0,00	0,00	0,30	0,04	0,04	0,01	76,86	11,64	0,00	0,00	0,00
Paving (acres/day)	0,0	N/A	N/A	N/A	N/A	N/A	N/A	0,00	0,00	0,00	N/A	N/A	N/A	N/A	N/A	N/A	N/A	N/A	N/A
Total [13]		**16,82**	**16,38**	**2,10**	**2,05**	**4 374,11**	**4 257,80**	**0,00**	**0,00**	**0,00**	**4,21**	**4,09**	**0,53**	**0,51**	**1 093,53**	**1 064,45**	**N/A**	**N/A**	**N/A**

Landfill Lining & Partial Closure

Schedule (days/yr)	Year
260	2029

		Fugitive Particulate Emissions						ROG Emissions			Controlled Emissions: Fugitive Particulate Emissions						Controlled Emissions: ROG Emissions		
		(lb/day)		(lb/hr)		(lb/yr)		(lb/day)	(lb/hr)	(lb/yr)	(lb/day)		(lb/hr)		(lb/yr)		(lb/day)	(lb/hr)	(lb/yr)
Activity	Max. Activity per day	PM_{10}	$PM_{2.5}$	PM_{10}	$PM_{2.5}$	PM_{10}	$PM_{2.5}$	ROG	ROG	ROG	PM_{10}	$PM_{2.5}$	PM_{10}	$PM_{2.5}$	PM_{10}	$PM_{2.5}$	ROG	ROG	ROG
Grading (acres/day)	5,5	5,83	0,63	0,73	0,08	1 516,52	163,75	0,00	0,00	0,00	1,46	0,16	0,18	0,02	379,13	40,94	0,00	0,00	0,00
Bulldozing (hr/day)	16	7,60	10,49	0,95	1,31	1 975,83	2 728,11	0,00	0,00	0,00	1,90	2,62	0,24	0,33	493,96	682,03	0,00	0,00	0,00
Truck Loading (cy/day)	10 135	1,14	0,17	0,14	0,02	297,15	45,00	0,00	0,00	0,00	0,29	0,04	0,04	0,01	74,29	11,25	0,00	0,00	0,00
Paving (acres/day)	0,0	N/A	N/A	N/A	N/A	N/A	N/A	0,00	0,00	0,00	N/A	N/A	N/A	N/A	N/A	N/A	N/A	N/A	N/A
Total [13]		**14,57**	**11,30**	**1,82**	**1,41**	**3 789,50**	**2 936,85**	**0,00**	**0,00**	**0,00**	**3,64**	**2,82**	**0,46**	**0,35**	**947,37**	**734,21**	**N/A**	**N/A**	**N/A**

Recovered Materials Storage

Schedule (days/yr)	Year
260	2029

		Fugitive Particulate Emissions						ROG Emissions			Controlled Emissions: Fugitive Particulate Emissions						Controlled Emissions: ROG Emissions		
		(lb/day)		(lb/hr)		(lb/yr)		(lb/day)	(lb/hr)	(lb/yr)	(lb/day)		(lb/hr)		(lb/yr)		(lb/day)	(lb/hr)	(lb/yr)
Activity	Max. Activity per day	PM_{10}	$PM_{2.5}$	PM_{10}	$PM_{2.5}$	PM_{10}	$PM_{2.5}$	ROG	ROG	ROG	PM_{10}	$PM_{2.5}$	PM_{10}	$PM_{2.5}$	PM_{10}	$PM_{2.5}$	ROG	ROG	ROG
Grading (acres/day)	1,5	1,59	0,17	0,20	0,02	413,60	44,66	0,00	0,00	0,00	0,40	0,04	0,05	0,01	103,40	11,16	0,00	0,00	0,00
Bulldozing (hr/day)	7	3,32	4,59	0,42	0,57	864,43	1 193,55	0,00	0,00	0,00	0,83	1,15	0,10	0,14	216,11	298,39	0,00	0,00	0,00
Truck Loading (cy/day)	0	0,00	0,00	0,00	0,00	0,00	0,00	0,00	0,00	0,00	0,00	0,00	0,00	0,00	0,00	0,00	0,00	0,00	0,00
Paving (acres/day)	0,1	N/A	N/A	N/A	N/A	N/A	N/A	0,26	0,03	68,12	N/A	N/A	N/A	N/A	N/A	N/A	N/A	N/A	N/A
Total [13]		**4,92**	**4,76**	**0,61**	**0,60**	**1 278,02**	**1 238,20**	**0,26**	**0,03**	**68,12**	**1,23**	**1,19**	**0,15**	**0,15**	**319,51**	**309,55**	**N/A**	**N/A**	**N/A**

HHW Storage

Schedule (days/yr)	Year
260	2029

		Fugitive Particulate Emissions						ROG Emissions			Controlled Emissions: Fugitive Particulate Emissions						Controlled Emissions: ROG Emissions		
		(lb/day)		(lb/hr)		(lb/yr)		(lb/day)	(lb/hr)	(lb/yr)	(lb/day)		(lb/hr)		(lb/yr)		(lb/day)	(lb/hr)	(lb/yr)
Activity	Max. Activity per day	PM_{10}	$PM_{2.5}$	PM_{10}	$PM_{2.5}$	PM_{10}	$PM_{2.5}$	ROG	ROG	ROG	PM_{10}	$PM_{2.5}$	PM_{10}	$PM_{2.5}$	PM_{10}	$PM_{2.5}$	ROG	ROG	ROG
Grading (acres/day)	1,5	1,59	0,17	0,20	0,02	413,60	44,66	0,00	0,00	0,00	0,40	0,04	0,05	0,01	103,40	11,16	0,00	0,00	0,00
Bulldozing (hr/day)	0	0,00	0,00	0,00	0,00	0,00	0,00	0,00	0,00	0,00	0,00	0,00	0,00	0,00	0,00	0,00	0,00	0,00	0,00
Truck Loading (cy/day)	0	0,00	0,00	0,00	0,00	0,00	0,00	0,00	0,00	0,00	0,00	0,00	0,00	0,00	0,00	0,00	0,00	0,00	0,00
Paving (acres/day)	0,0	N/A	N/A	N/A	N/A	N/A	N/A	0,00	0,00	0,00	N/A	N/A	N/A	N/A	N/A	N/A	N/A	N/A	N/A
Total [13]		**1,59**	**0,17**	**0,20**	**0,02**	**413,60**	**44,66**	**0,00**	**0,00**	**0,00**	**0,40**	**0,04**	**0,05**	**0,01**	**103,40**	**11,16**	**N/A**	**N/A**	**N/A**

WPWMA EIR
Construction Emissions - Proposed Project Fugitive Emissions From Activities
Plan Concept 1

	Schedule (days/yr)	Year
Primary Maintenance Facility	260	2033

		Fugitive Particulate Emissions						ROG Emissions			Controlled Emissions								
		(lb/day)		(lb/hr)		(lb/yr)		(lb/day)	(lb/hr)	(lb/yr)	(lb/day)		(lb/hr)		(lb/yr)		(lb/day)	(lb/hr)	(lb/yr)
Activity	**Max. Activity per day**	**PM_{10}**	**$PM_{2.5}$**	**PM_{10}**	**$PM_{2.5}$**	**PM_{10}**	**$PM_{2.5}$**	**ROG**	**ROG**	**ROG**	**PM_{10}**	**$PM_{2.5}$**	**PM_{10}**	**$PM_{2.5}$**	**PM_{10}**	**$PM_{2.5}$**	**ROG**	**ROG**	**ROG**
Grading (acres/day)	1,5	1,59	0,17	0,20	0,02	413,60	44,66	0,00	0,00	0,00	0,40	0,04	0,05	0,01	103,40	11,16	0,00	0,00	0,00
Bulldozing (hr/day)	7	3,32	4,59	0,42	0,57	864,43	1 193,55	0,00	0,00	0,00	0,83	1,15	0,10	0,14	216,11	298,39	0,00	0,00	0,00
Truck Loading (cy/day)	0	0,00	0,00	0,00	0,00	0,00	0,00	0,00	0,00	0,00	0,00	0,00	0,00	0,00	0,00	0,00	0,00	0,00	0,00
Paving (acres/day)	0,2	N/A	N/A	N/A	N/A	N/A	N/A	0,52	0,07	136,24	N/A	N/A	N/A	N/A	N/A	N/A	N/A	N/A	N/A
Total [13]		**4,92**	**4,76**	**0,61**	**0,60**	**1 278,02**	**1 238,20**	**0,52**	**0,07**	**136,24**	**1,23**	**1,19**	**0,15**	**0,15**	**319,51**	**309,55**	**N/A**	**N/A**	**N/A**

	Schedule (days/yr)	Year
Stockpile Relocation	260	2033

		Fugitive Particulate Emissions						ROG Emissions			Controlled Emissions								
		(lb/day)		(lb/hr)		(lb/yr)		(lb/day)	(lb/hr)	(lb/yr)	(lb/day)		(lb/hr)		(lb/yr)		(lb/day)	(lb/hr)	(lb/yr)
Activity	**Max. Activity per day**	**PM_{10}**	**$PM_{2.5}$**	**PM_{10}**	**$PM_{2.5}$**	**PM_{10}**	**$PM_{2.5}$**	**ROG**	**ROG**	**ROG**	**PM_{10}**	**$PM_{2.5}$**	**PM_{10}**	**$PM_{2.5}$**	**PM_{10}**	**$PM_{2.5}$**	**ROG**	**ROG**	**ROG**
Grading (acres/day)	0,0	0,00	0,00	0,00	0,00	0,00	0,00	0,00	0,00	0,00	0,00	0,00	0,00	0,00	0,00	0,00	0,00	0,00	0,00
Bulldozing (hr/day)	0	0,00	0,00	0,00	0,00	0,00	0,00	0,00	0,00	0,00	0,00	0,00	0,00	0,00	0,00	0,00	0,00	0,00	0,00
Truck Loading (cy/day)	5 385	0,61	0,09	0,08	0,01	157,88	23,91	0,00	0,00	0,00	0,15	0,02	0,02	0,00	39,47	5,98	0,00	0,00	0,00
Paving (acres/day)	0,0	N/A	N/A	N/A	N/A	N/A	N/A	0,00	0,00	0,00	N/A	N/A	N/A	N/A	N/A	N/A	N/A	N/A	N/A
Total [13]		**0,61**	**0,09**	**0,08**	**0,01**	**157,88**	**23,91**	**0,00**	**0,00**	**0,00**	**0,15**	**0,02**	**0,02**	**0,00**	**39,47**	**5,98**	**N/A**	**N/A**	**N/A**

[1] Unless otherwise noted data provided in the Assumptions tab and are based on project specific inputs.

[2] Typical module size based on Module 9 as per data provided by CCL July 2011. Data provided for entrance construction is 12,000 cy/day.

[3] Total area to be paved includes approximately 8 acres for road and 3 acres for new parking area as per assumptions sheet.

[4] Volume of cut / fill for the Berm Construction taken from design drawings (ccl_berm-calcs-r01.pdf).

[5] The Berm schedule was taken as described on the Construction PP - Exhaust tab.

[6] Source: SCAQMD Particulate Matter (PM) 2.5 Significance Thresholds and Calculation Methodology, October 2006. For construction fugitive dust sources, it is assumed that 20.8% of the PM_{10} would be $PM_{2.5}$. For paved and unpaved road fugitive dust sources, it is assumed that 16.9% and 21.2% of the PM_{10} would be $PM_{2.5}$, respectively.

[7] Source: SCAQMD CEQA Air Quality Handbook, November 1993. Table 9-9, assumed soil density of 1.8 ton/yd^3.

[8] Source: Table 3-2 of the WRAP Fugitive Dust Handbook (Countess Environmental, 2006), which is consistent with the approach used by URBEMIS2007, the previously ARB-approved emission calculation estimator.

[9] Source: Section 4.8 of Appendix A of the CalEEMod User's Guide, 2011.

[10] Fugitive Emissions are based on maximum amount of earth disturbed. Emission factors are independent of operating year. Maximum daily activity data provided by CCL, July 2011.

[11] Fugitive dust emissions assumed not to occur on days in which precipitation would be >0.1 inches. Average Los Angeles - South Coast precipitation conditions (33 days/year) were taken from CalEEMod Appendix D, Table 1.1.

[12] Using the assumptions in Appendix A of the Software User's Guide: URBEMIS2007 for Windows (JSA, 2007), up to 25% of the total graded area could be disturbed on the worst-case day.

[13] The Total Daily and Total Hourly emissions are the maximum emissions given the assumed schedule (i.e., that Grading and Excavation activities do not occur simultaneously and that Berm activities may overlap with Grading and/or Excavation activities). The Total Annual emissions represent the sum of all construction activities occurring within the year.

[14] It is assumed that the construction phases excavation and grading could occur simultaneously for the module construction as consistent with the exhaust construction tab.

[15] Totals for Module Construction represent total emissions from construction of one Module since one module is constructed per year.

WPWMA EIR
Construction Emissions - Proposed Project Fugitive Emissions From Activities
Plan Concept 2

= manual input

Grading Assumptions

Equipment Type	Acres/8hr-day
Rubber Tired Dozers	0,5
Concrete/Industrial Saws	0
Crawler Tractors	0,5
Graders	0,5
Excavators	0
Scrapers	1

Variable	Value	Unit	
Mean Vehicle Speed, S	7,1	mph	AP-42 default is 7.1 mph
PM2.5 Scaling Factor, $F_{PM2.5}$	0,031		AP-42 default is 0.031
PM10 Scaling Factor, F_{PM10}	0,6		AP-42 default is 0.6
Blade Width	12	ft	CalEEMod default is 12 ft based on CAT 140 Motor Grader
Emission Factor PM15, EF_{PM15}	2,571	lb/VMT	$EF_{PM15} = 0.051 \times (S)^{2.0}$
Emission Factor TSP, EF_{TSP}	5,373	lb/VMT	$EF_{TSP} = 0.04 \times (S)^{2.5}$
Emission Factor PM10, EF_{PM10}	1,543	lb/VMT	$EF_{PM10} = EF_{PM15} \times F_{PM10}$
Emission Factor PM2.5, $EF_{PM2.5}$	0,167	lb/VMT	$EF_{PM2.5} = EF_{TSP} \times F_{PM2.5}$
			E = EF x VMT

	Number of Equipment in Grading Phase											
Equipment Type	**Main Entrance**	**New SW Ponds**	**Unlined Area Excavation (1 of 3)**	**Stockpile Relocation**	**Public Area**	**Public Area - SW Pond**	**Unlined Area Excavation (3 of 3)**	**Landfill Construction**	**Landfill Lining & Partial Closure**	**Admin Building**	**Recovered Materials Storage**	**Shared Site Utilities**
Rubber Tired Dozers	1	0	0	0	1	N/A	0	1	2	1	1	1
Concrete/Industrial Saws	0	0	0	0	0	N/A	0	0	0	1	0	1
Tractors/Loaders/Backhoes	1	0	0	0	2	N/A	0	2	2	2	1	2
Graders	1	0	0	0	1	N/A	0	1	1	0	1	0
Excavators	0	0	0	0	2	N/A	0	2	1	0	0	0
Scrapers	0	0	0	0	2	N/A	0	2	3	0	0	0

Note: Landfill Lining & Partial Closure column shows number of equipment for Lining & Partial Closure phase, not Grading phase.

		Maximum Daily Emissions (lb/day) - across all construction phases					
		Uncontrolled Emissions			Controlled Emissions		
Element	**Year**	**PM_{10}**	**$PM_{2.5}$**	**ROG**	**PM_{10}**	**$PM_{2.5}$**	**ROG**
Main Entrance	2024	3,32	4,59	0,52	2,49	3,44	0,52
New SW Ponds	2024	1,09	0,16	0,00	0,81	0,12	0,00
Unlined Area Excavation (1 of 3)	2024	11,40	15,74	0,00	8,55	11,80	0,00
Stockpile Relocation	2024	0,30	0,05	0,00	0,23	0,03	0,00
Public Area	2026	11,40	15,74	1,18	8,55	11,80	1,18
Public Area - SW Pond	2026	3,32	4,59	0,00	2,49	3,44	0,00
Unlined Area Excavation (3 of 3)	2026	11,40	15,74	0,00	8,55	11,80	0,00
Landfill Construction	2031	11,40	15,74	0,00	8,55	11,80	0,00
Landfill Lining & Partial Closure	2032	7,60	10,49	0,00	5,70	7,87	0,00
Admin Building	2032	1,59	0,17	0,26	1,19	0,13	0,26
Recovered Materials Storage	2032	3,32	4,59	0,26	2,49	3,44	0,26
Shared Site Utilities	2032	1,59	0,17	0,00	1,19	0,13	0,00

Note: Assumes element and associated stormwater pond are built concurrently, as opposed to sequentially.

	Maximum Daily Emissions (lb/day) - across all construction phases					
	Uncontrolled Emissions			Controlled Emissions		
Year	**PM_{10}**	**$PM_{2.5}$**	**ROG**	**PM_{10}**	**$PM_{2.5}$**	**ROG**
2024	16,11	20,54	0,52	12,09	15,41	0,52
2026	26,12	36,07	1,18	19,59	27,05	1,18
2031	11,40	15,74	0,00	8,55	11,80	0,00
2032	14,11	15,43	0,52	10,58	11,57	0,52

WPWMA EIR
Construction Emissions - Proposed Project Fugitive Emissions From Activities
Plan Concept 2

Bulldozing Assumptions

Variable	Value	Unit	
C (TSP)	5,7		AP-42 constant for overburden
C (PM15)	1		AP-42 constant for overburden
Material Moisture Content, M	7,90%		AP-42 constant for overburden
Material Silt Content, s	6,90%		AP-42 constant for overburden
PM10 Scaling Factor, F_{PM10}	0,75		AP-42 constant for overburden
PM2.5 Scaling Factor, $F_{PM2.5}$	0,105		AP-42 constant for overburden
Emission Factor PM15, EF_{PM15}	0,633	lb/hr	$EF_{PM15} = (C_{PM15} \times s^{1.5}) / M^{1.4}$
Emission Factor TSP, EF_{TSP}	6,246	lb/hr	$EF_{TSP} = (C_{TSP} \times s^{1.2}) / M^{1.3}$
Emission Factor PM10, EF_{PM10}	0,475	lb/hr	$EF_{PM10} = EF_{PM15} \times F_{PM10}$
Emission Factor PM2.5, $EF_{PM2.5}$	0,656	lb/hr	$EF_{PM2.5} = EF_{TSP} \times F_{PM2.5}$
			E = EF x Hr

	Number of Equipment-Hours Per Day in Site Preparation Phase											
Equipment Type	Main Entrance	New SW Ponds	Unlined Area Excavation (1 of 3)	Stockpile Relocation	Public Area	Public Area - SW Pond	Unlined Area Excavation (3 of 3)	Landfill Construction	Landfill Lining & Partial Closure	Admin Building	Recovered Materials Storage	Shared Site Utilities
Graders	8	0	0	0	0	8	0	0	8	8	8	8
Tractors/Loaders/Backhoes	8	0	32	0	32	8	32	32	12	8	8	8
Rubber Tired Dozers	7	0	24	0	24	7	24	24	16	0	7	0
Scrapers	0	0	0	0	0	0	0	0	24	0	0	0

Note: Landfill Lining & Partial Closure column shows equipment-hours for Lining & Partial Closure phase, not Site Preparation phase.

Truck Loading Assumptions

Variable	Value	Unit	
Particle size multiplier, $k_{PM2.5}$	0,053		AP-42 default is 0.053
Particle size multiplier, k_{PM10}	0,35		AP-42 default is 0.35
Wind speed, U	4,917	mph	Based on CalEEMod default of 2.2 m/s for Placer County - Sacramento
Material moisture content, M	12	%	AP-42 default is 12%
Density	1,264	tons/cy	Based on CalEEMod assumption of 1.264 tons per cubic yard
Emission Factor PM2.5, $EF_{PM2.5}$	1,35E-05	lb/ton	$EF_{PM2.5} = k \times (0.0032) \times [(U/5)^{1.3} / (M/2)^{1.4}]$
Emission Factor PM10, EF_{PM10}	8,92E-05	lb/ton	$EF_{PM10} = k \times (0.0032) \times [(U/5)^{1.3} / (M/2)^{1.4}]$
			E = EF x Throughput

Throughput	Main Entrance	New SW Ponds	Unlined Area Excavation (1 of 3)	Stockpile Relocation	Public Area	Public Area - SW Pond	Unlined Area Excavation (3 of 3)	Landfill Construction	Landfill Lining & Partial Closure	Admin Building	Recovered Materials Storage	Shared Site Utilities
Excavation Volume (cy)	0	96 342	1 215 334	700 000	0	10 162	1 215 334	1 835 000	131 750	0	0	7 852
Excavation Days (days)	0	10	116	260	0	1	116	175	13	0	0	1

Asphalt Paving Assumptions

Variable	Value	Unit	
Emission Factor ROG, EF_{ROG}	2,62	lb/ac	CalEEMod uses SMAQMD default of 2.62 lb/ac
			E = EF x Area

Asphalt	Main Entrance	New SW Ponds	Unlined Area Excavation (1 of 3)	Stockpile Relocation	Public Area	Public Area - SW Pond	Unlined Area Excavation (3 of 3)	Landfill Construction	Landfill Lining & Partial Closure	Admin Building	Recovered Materials Storage	Shared Site Utilities
Paved Asphalt Area (ac)	2	0	0	0	9	0	0	0	0	1	1	0
Paving Days (days)	10	0	0	0	20	0	0	0	0	10	10	0

General Assumptions

Construction Schedule	Operational Schedule	Unit
8	8	hr/day
5	5	days/week
4	(52 weeks / yr)	weeks/month

Control Measures

Measure	Control Efficiency	Applicable Source	Reference
Apply water every 3 hours to distrubed areas within construction site.	75,00%	Watering of fugitve dust activity	Sacramento Metropolitan Air Quality Management District (SMAQMD). 2015. CEQA Guide. June.
Total Control Efficiency	75,00%	Excavation / Grading	

WPWMA EIR
Construction Emissions - Proposed Project Fugitive Emissions From Activities
Plan Concept 2

Main Entrance

Duration (days)	Year
260	2024

		Fugitive Particulate Emissions						ROG Emissions			Controlled Emissions: Fugitive Particulate Emissions						Controlled Emissions: ROG Emissions		
		(lb/day)		(lb/hr)		(lb/yr)		(lb/day)	(lb/hr)	(lb/yr)	(lb/day)		(lb/hr)		(lb/yr)		(lb/day)	(lb/hr)	(lb/yr)
Activity	Max. Activity per day	PM_{10}	$PM_{2.5}$	PM_{10}	$PM_{2.5}$	PM_{10}	$PM_{2.5}$	ROG	ROG	ROG	PM_{10}	$PM_{2.5}$	PM_{10}	$PM_{2.5}$	PM_{10}	$PM_{2.5}$	ROG	ROG	ROG
Grading (acres/day)	1,5	1,59	0,17	0,20	0,02	413,60	44,66	0,00	0,00	0,00	1,19	0,13	0,15	0,02	310,20	33,49	0,00	0,00	0,00
Bulldozing (hr/day)	7	3,32	4,59	0,42	0,57	864,43	1 193,55	0,00	0,00	0,00	2,49	3,44	0,31	0,43	648,32	895,16	0,00	0,00	0,00
Truck Loading (cy/day)	0	0,00	0,00	0,00	0,00	0,00	0,00	0,00	0,00	0,00	0,00	0,00	0,00	0,00	0,00	0,00	0,00	0,00	0,00
Paving (acres/day)	0,2	N/A	N/A	N/A	N/A	N/A	N/A	0,52	0,07	136,24	N/A	N/A	N/A	N/A	N/A	N/A	N/A	N/A	N/A
Total [13]		**4,92**	**4,76**	**0,61**	**0,60**	**1 278,02**	**1 238,20**	**0,52**	**0,07**	**136,24**	**3,69**	**3,57**	**0,46**	**0,45**	**958,52**	**928,65**	**N/A**	**N/A**	**N/A**

New SW Ponds

Duration (days)	Year
260	2024

		Fugitive Particulate Emissions						ROG Emissions			Controlled Emissions: Fugitive Particulate Emissions						Controlled Emissions: ROG Emissions		
		(lb/day)		(lb/hr)		(lb/yr)		(lb/day)	(lb/hr)	(lb/yr)	(lb/day)		(lb/hr)		(lb/yr)		(lb/day)	(lb/hr)	(lb/yr)
Activity	Max. Activity per day	PM_{10}	$PM_{2.5}$	PM_{10}	$PM_{2.5}$	PM_{10}	$PM_{2.5}$	ROG	ROG	ROG	PM_{10}	$PM_{2.5}$	PM_{10}	$PM_{2.5}$	PM_{10}	$PM_{2.5}$	ROG	ROG	ROG
Grading (acres/day)	0,0	0,00	0,00	0,00	0,00	0,00	0,00	0,00	0,00	0,00	0,00	0,00	0,00	0,00	0,00	0,00	0,00	0,00	0,00
Bulldozing (hr/day)	0	0,00	0,00	0,00	0,00	0,00	0,00	0,00	0,00	0,00	0,00	0,00	0,00	0,00	0,00	0,00	0,00	0,00	0,00
Truck Loading (cy/day)	9 634	1,09	0,16	0,14	0,02	282,48	42,78	0,00	0,00	0,00	0,81	0,12	0,10	0,02	211,86	32,08	0,00	0,00	0,00
Paving (acres/day)	0,0	N/A	N/A	N/A	N/A	N/A	N/A	0,00	0,00	0,00	N/A	N/A	N/A	N/A	N/A	N/A	N/A	N/A	N/A
Total [13]		**1,09**	**0,16**	**0,14**	**0,02**	**282,48**	**42,78**	**0,00**	**0,00**	**0,00**	**0,81**	**0,12**	**0,10**	**0,02**	**211,86**	**32,08**	**N/A**	**N/A**	**N/A**

Unlined Area Excavation (1 of 3)

Duration (days)	Year
260	2024

		Fugitive Particulate Emissions						ROG Emissions			Controlled Emissions: Fugitive Particulate Emissions						Controlled Emissions: ROG Emissions		
		(lb/day)		(lb/hr)		(lb/yr)		(lb/day)	(lb/hr)	(lb/yr)	(lb/day)		(lb/hr)		(lb/yr)		(lb/day)	(lb/hr)	(lb/yr)
Activity	Max. Activity per day	PM_{10}	$PM_{2.5}$	PM_{10}	$PM_{2.5}$	PM_{10}	$PM_{2.5}$	ROG	ROG	ROG	PM_{10}	$PM_{2.5}$	PM_{10}	$PM_{2.5}$	PM_{10}	$PM_{2.5}$	ROG	ROG	ROG
Grading (acres/day)	0,0	0,00	0,00	0,00	0,00	0,00	0,00	0,00	0,00	0,00	0,00	0,00	0,00	0,00	0,00	0,00	0,00	0,00	0,00
Bulldozing (hr/day)	24	11,40	15,74	1,42	1,97	2 963,75	4 092,16	0,00	0,00	0,00	8,55	11,80	1,07	1,48	2 222,81	3 069,12	0,00	0,00	0,00
Truck Loading (cy/day)	10 477	1,18	0,18	0,15	0,02	307,19	46,52	0,00	0,00	0,00	0,89	0,13	0,11	0,02	230,39	34,89	0,00	0,00	0,00
Paving (acres/day)	0,0	N/A	N/A	N/A	N/A	N/A	N/A	0,00	0,00	0,00	N/A	N/A	N/A	N/A	N/A	N/A	N/A	N/A	N/A
Total [13]		**12,58**	**15,92**	**1,57**	**1,99**	**3 270,94**	**4 138,68**	**0,00**	**0,00**	**0,00**	**9,44**	**11,94**	**1,18**	**1,49**	**2 453,20**	**3 104,01**	**N/A**	**N/A**	**N/A**

Stockpile Relocation

Duration (days)	Year
260	2024

		Fugitive Particulate Emissions						ROG Emissions			Controlled Emissions: Fugitive Particulate Emissions						Controlled Emissions: ROG Emissions		
		(lb/day)		(lb/hr)		(lb/yr)		(lb/day)	(lb/hr)	(lb/yr)	(lb/day)		(lb/hr)		(lb/yr)		(lb/day)	(lb/hr)	(lb/yr)
Activity	Max. Activity per day	PM_{10}	$PM_{2.5}$	PM_{10}	$PM_{2.5}$	PM_{10}	$PM_{2.5}$	ROG	ROG	ROG	PM_{10}	$PM_{2.5}$	PM_{10}	$PM_{2.5}$	PM_{10}	$PM_{2.5}$	ROG	ROG	ROG
Grading (acres/day)	0,0	0,00	0,00	0,00	0,00	0,00	0,00	0,00	0,00	0,00	0,00	0,00	0,00	0,00	0,00	0,00	0,00	0,00	0,00
Bulldozing (hr/day)	0	0,00	0,00	0,00	0,00	0,00	0,00	0,00	0,00	0,00	0,00	0,00	0,00	0,00	0,00	0,00	0,00	0,00	0,00
Truck Loading (cy/day)	2 692	0,30	0,05	0,04	0,01	78,94	11,95	0,00	0,00	0,00	0,23	0,03	0,03	0,00	59,20	8,97	0,00	0,00	0,00
Paving (acres/day)	0,0	N/A	N/A	N/A	N/A	N/A	N/A	0,00	0,00	0,00	N/A	N/A	N/A	N/A	N/A	N/A	N/A	N/A	N/A
Total [13]		**0,30**	**0,05**	**0,04**	**0,01**	**78,94**	**11,95**	**0,00**	**0,00**	**0,00**	**0,23**	**0,03**	**0,03**	**0,00**	**59,20**	**8,97**	**N/A**	**N/A**	**N/A**

Public Area

Duration (days)	Year
260	2026

		Fugitive Particulate Emissions						ROG Emissions			Controlled Emissions: Fugitive Particulate Emissions						Controlled Emissions: ROG Emissions		
		(lb/day)		(lb/hr)		(lb/yr)		(lb/day)	(lb/hr)	(lb/yr)	(lb/day)		(lb/hr)		(lb/yr)		(lb/day)	(lb/hr)	(lb/yr)
Activity	Max. Activity per day	PM_{10}	$PM_{2.5}$	PM_{10}	$PM_{2.5}$	PM_{10}	$PM_{2.5}$	ROG	ROG	ROG	PM_{10}	$PM_{2.5}$	PM_{10}	$PM_{2.5}$	PM_{10}	$PM_{2.5}$	ROG	ROG	ROG
Grading (acres/day)	4,0	4,24	0,46	0,53	0,06	1 102,92	119,09	0,00	0,00	0,00	3,18	0,34	0,40	0,04	827,19	89,32	0,00	0,00	0,00
Bulldozing (hr/day)	24	11,40	15,74	1,42	1,97	2 963,75	4 092,16	0,00	0,00	0,00	8,55	11,80	1,07	1,48	2 222,81	3 069,12	0,00	0,00	0,00
Truck Loading (cy/day)	0	0,00	0,00	0,00	0,00	0,00	0,00	0,00	0,00	0,00	0,00	0,00	0,00	0,00	0,00	0,00	0,00	0,00	0,00
Paving (acres/day)	0,5	N/A	N/A	N/A	N/A	N/A	N/A	1,18	0,15	306,54	N/A	N/A	N/A	N/A	N/A	N/A	N/A	N/A	N/A
Total [13]		**15,64**	**16,20**	**1,96**	**2,02**	**4 066,67**	**4 211,25**	**1,18**	**0,15**	**306,54**	**11,73**	**12,15**	**1,47**	**1,52**	**3 050,00**	**3 158,44**	**N/A**	**N/A**	**N/A**

WPWMA EIR
Construction Emissions - Proposed Project Fugitive Emissions From Activities
Plan Concept 2

	Duration (days)	Year
Public Area - SW Pond	260	2026

		Fugitive Particulate Emissions						ROG Emissions			Controlled Emissions: Fugitive Particulate Emissions						Controlled Emissions: ROG Emissions		
		(lb/day)		(lb/hr)		(lb/yr)		(lb/day)	(lb/hr)	(lb/yr)	(lb/day)		(lb/hr)		(lb/yr)		(lb/day)	(lb/hr)	(lb/yr)
Activity	**Max. Activity per day**	**PM_{10}**	**$PM_{2.5}$**	**PM_{10}**	**$PM_{2.5}$**	**PM_{10}**	**$PM_{2.5}$**	**ROG**	**ROG**	**ROG**	**PM_{10}**	**$PM_{2.5}$**	**PM_{10}**	**$PM_{2.5}$**	**PM_{10}**	**$PM_{2.5}$**	**ROG**	**ROG**	**ROG**
Grading (acres/day)	0,0	0,00	0,00	0,00	0,00	0,00	0,00	0,00	0,00	0,00	0,00	0,00	0,00	0,00	0,00	0,00	0,00	0,00	0,00
Bulldozing (hr/day)	7	3,32	4,59	0,42	0,57	864,43	1 193,55	0,00	0,00	0,00	2,49	3,44	0,31	0,43	648,32	895,16	0,00	0,00	0,00
Truck Loading (cy/day)	10 162	1,15	0,17	0,14	0,02	297,95	45,12	0,00	0,00	0,00	0,86	0,13	0,11	0,02	223,46	33,84	0,00	0,00	0,00
Paving (acres/day)	0,0	N/A	N/A	N/A	N/A	N/A	N/A	0,00	0,00	0,00	N/A	N/A	N/A	N/A	N/A	N/A	N/A	N/A	N/A
Total [13]		**4,47**	**4,76**	**0,56**	**0,60**	**1 162,38**	**1 238,66**	**0,00**	**0,00**	**0,00**	**3,35**	**3,57**	**0,42**	**0,45**	**871,78**	**929,00**	**N/A**	**N/A**	**N/A**

	Duration (days)	Year
Unlined Area Excavation (3 of 3)	260	2026

		Fugitive Particulate Emissions						ROG Emissions			Controlled Emissions: Fugitive Particulate Emissions						Controlled Emissions: ROG Emissions		
		(lb/day)		(lb/hr)		(lb/yr)		(lb/day)	(lb/hr)	(lb/yr)	(lb/day)		(lb/hr)		(lb/yr)		(lb/day)	(lb/hr)	(lb/yr)
Activity	**Max. Activity per day**	**PM_{10}**	**$PM_{2.5}$**	**PM_{10}**	**$PM_{2.5}$**	**PM_{10}**	**$PM_{2.5}$**	**ROG**	**ROG**	**ROG**	**PM_{10}**	**$PM_{2.5}$**	**PM_{10}**	**$PM_{2.5}$**	**PM_{10}**	**$PM_{2.5}$**	**ROG**	**ROG**	**ROG**
Grading (acres/day)	0,0	0,00	0,00	0,00	0,00	0,00	0,00	0,00	0,00	0,00	0,00	0,00	0,00	0,00	0,00	0,00	0,00	0,00	0,00
Bulldozing (hr/day)	24	11,40	15,74	1,42	1,97	2 963,75	4 092,16	0,00	0,00	0,00	8,55	11,80	1,07	1,48	2 222,81	3 069,12	0,00	0,00	0,00
Truck Loading (cy/day)	10 477	1,18	0,18	0,15	0,02	307,19	46,52	0,00	0,00	0,00	0,89	0,13	0,11	0,02	230,39	34,89	0,00	0,00	0,00
Paving (acres/day)	0,0	N/A	N/A	N/A	N/A	N/A	N/A	0,00	0,00	0,00	N/A	N/A	N/A	N/A	N/A	N/A	N/A	N/A	N/A
Total [13]		**12,58**	**15,92**	**1,57**	**1,99**	**3 270,94**	**4 138,68**	**0,00**	**0,00**	**0,00**	**9,44**	**11,94**	**1,18**	**1,49**	**2 453,20**	**3 104,01**	**N/A**	**N/A**	**N/A**

	Duration (days)	Year
Landfill Construction	260	2031

		Fugitive Particulate Emissions						ROG Emissions			Controlled Emissions: Fugitive Particulate Emissions						Controlled Emissions: ROG Emissions		
		(lb/day)		(lb/hr)		(lb/yr)		(lb/day)	(lb/hr)	(lb/yr)	(lb/day)		(lb/hr)		(lb/yr)		(lb/day)	(lb/hr)	(lb/yr)
Activity	**Max. Activity per day**	**PM_{10}**	**$PM_{2.5}$**	**PM_{10}**	**$PM_{2.5}$**	**PM_{10}**	**$PM_{2.5}$**	**ROG**	**ROG**	**ROG**	**PM_{10}**	**$PM_{2.5}$**	**PM_{10}**	**$PM_{2.5}$**	**PM_{10}**	**$PM_{2.5}$**	**ROG**	**ROG**	**ROG**
Grading (acres/day)	4,0	4,24	0,46	0,53	0,06	1 102,92	119,09	0,00	0,00	0,00	3,18	0,34	0,40	0,04	827,19	89,32	0,00	0,00	0,00
Bulldozing (hr/day)	24	11,40	15,74	1,42	1,97	2 963,75	4 092,16	0,00	0,00	0,00	8,55	11,80	1,07	1,48	2 222,81	3 069,12	0,00	0,00	0,00
Truck Loading (cy/day)	10 486	1,18	0,18	0,15	0,02	307,44	46,56	0,00	0,00	0,00	0,89	0,13	0,11	0,02	230,58	34,92	0,00	0,00	0,00
Paving (acres/day)	0,0	N/A	N/A	N/A	N/A	N/A	N/A	0,00	0,00	0,00	N/A	N/A	N/A	N/A	N/A	N/A	N/A	N/A	N/A
Total [13]		**16,82**	**16,38**	**2,10**	**2,05**	**4 374,11**	**4 257,80**	**0,00**	**0,00**	**0,00**	**12,62**	**12,28**	**1,58**	**1,54**	**3 280,59**	**3 193,35**	**N/A**	**N/A**	**N/A**

	Duration (days)	Year
Landfill Lining & Partial Closure	260	2032

		Fugitive Particulate Emissions						ROG Emissions			Controlled Emissions: Fugitive Particulate Emissions						Controlled Emissions: ROG Emissions		
		(lb/day)		(lb/hr)		(lb/yr)		(lb/day)	(lb/hr)	(lb/yr)	(lb/day)		(lb/hr)		(lb/yr)		(lb/day)	(lb/hr)	(lb/yr)
Activity	**Max. Activity per day**	**PM_{10}**	**$PM_{2.5}$**	**PM_{10}**	**$PM_{2.5}$**	**PM_{10}**	**$PM_{2.5}$**	**ROG**	**ROG**	**ROG**	**PM_{10}**	**$PM_{2.5}$**	**PM_{10}**	**$PM_{2.5}$**	**PM_{10}**	**$PM_{2.5}$**	**ROG**	**ROG**	**ROG**
Grading (acres/day)	5,5	5,83	0,63	0,73	0,08	1 516,52	163,75	0,00	0,00	0,00	4,37	0,47	0,55	0,06	1 137,39	122,81	0,00	0,00	0,00
Bulldozing (hr/day)	16	7,60	10,49	0,95	1,31	1 975,83	2 728,11	0,00	0,00	0,00	5,70	7,87	0,71	0,98	1 481,87	2 046,08	0,00	0,00	0,00
Truck Loading (cy/day)	10 135	1,14	0,17	0,14	0,02	297,15	45,00	0,00	0,00	0,00	0,86	0,13	0,11	0,02	222,86	33,75	0,00	0,00	0,00
Paving (acres/day)	0,0	N/A	N/A	N/A	N/A	N/A	N/A	0,00	0,00	0,00	N/A	N/A	N/A	N/A	N/A	N/A	N/A	N/A	N/A
Total [13]		**14,57**	**11,30**	**1,82**	**1,41**	**3 789,50**	**2 936,85**	**0,00**	**0,00**	**0,00**	**10,93**	**8,47**	**1,37**	**1,06**	**2 842,12**	**2 202,64**	**N/A**	**N/A**	**N/A**

	Duration (days)	Year
Admin Building	260	2032

		Fugitive Particulate Emissions						ROG Emissions			Controlled Emissions: Fugitive Particulate Emissions						Controlled Emissions: ROG Emissions		
		(lb/day)		(lb/hr)		(lb/yr)		(lb/day)	(lb/hr)	(lb/yr)	(lb/day)		(lb/hr)		(lb/yr)		(lb/day)	(lb/hr)	(lb/yr)
Activity	**Max. Activity per day**	**PM_{10}**	**$PM_{2.5}$**	**PM_{10}**	**$PM_{2.5}$**	**PM_{10}**	**$PM_{2.5}$**	**ROG**	**ROG**	**ROG**	**PM_{10}**	**$PM_{2.5}$**	**PM_{10}**	**$PM_{2.5}$**	**PM_{10}**	**$PM_{2.5}$**	**ROG**	**ROG**	**ROG**
Grading (acres/day)	1,5	1,59	0,17	0,20	0,02	413,60	44,66	0,00	0,00	0,00	1,19	0,13	0,15	0,02	310,20	33,49	0,00	0,00	0,00
Bulldozing (hr/day)	0	0,00	0,00	0,00	0,00	0,00	0,00	0,00	0,00	0,00	0,00	0,00	0,00	0,00	0,00	0,00	0,00	0,00	0,00
Truck Loading (cy/day)	0	0,00	0,00	0,00	0,00	0,00	0,00	0,00	0,00	0,00	0,00	0,00	0,00	0,00	0,00	0,00	0,00	0,00	0,00
Paving (acres/day)	0,1	N/A	N/A	N/A	N/A	N/A	N/A	0,26	0,03	68,12	N/A	N/A	N/A	N/A	N/A	N/A	N/A	N/A	N/A
Total [13]		**1,59**	**0,17**	**0,20**	**0,02**	**413,60**	**44,66**	**0,26**	**0,03**	**68,12**	**1,19**	**0,13**	**0,15**	**0,02**	**310,20**	**33,49**	**N/A**	**N/A**	**N/A**

WPWMA EIR
Construction Emissions - Proposed Project Fugitive Emissions From Activities
Plan Concept 2

	Duration (days)	Year
Recovered Materials Storage	260	2032

		Fugitive Particulate Emissions						ROG Emissions			Controlled Emissions: Fugitive Particulate Emissions						Controlled Emissions: ROG Emissions		
		(lb/day)		(lb/hr)		(lb/yr)		(lb/day)	(lb/hr)	(lb/yr)	(lb/day)		(lb/hr)		(lb/yr)		(lb/day)	(lb/hr)	(lb/yr)
Activity	**Max. Activity per day**	**PM_{10}**	**$PM_{2.5}$**	**PM_{10}**	**$PM_{2.5}$**	**PM_{10}**	**$PM_{2.5}$**	**ROG**	**ROG**	**ROG**	**PM_{10}**	**$PM_{2.5}$**	**PM_{10}**	**$PM_{2.5}$**	**PM_{10}**	**$PM_{2.5}$**	**ROG**	**ROG**	**ROG**
Grading (acres/day)	1,5	1,59	0,17	0,20	0,02	413,60	44,66	0,00	0,00	0,00	1,19	0,13	0,15	0,02	310,20	33,49	0,00	0,00	0,00
Bulldozing (hr/day)	7	3,32	4,59	0,42	0,57	864,43	1 193,55	0,00	0,00	0,00	2,49	3,44	0,31	0,43	648,32	895,16	0,00	0,00	0,00
Truck Loading (cy/day)	0	0,00	0,00	0,00	0,00	0,00	0,00	0,00	0,00	0,00	0,00	0,00	0,00	0,00	0,00	0,00	0,00	0,00	0,00
Paving (acres/day)	0,1	N/A	N/A	N/A	N/A	N/A	N/A	0,26	0,03	68,12	N/A	N/A	N/A	N/A	N/A	N/A	N/A	N/A	N/A
Total [13]		**4,92**	**4,76**	**0,61**	**0,60**	**1 278,02**	**1 238,20**	**0,26**	**0,03**	**68,12**	**3,69**	**3,57**	**0,46**	**0,45**	**958,52**	**928,65**	**N/A**	**N/A**	**N/A**

	Duration (days)	Year
Shared Site Utilities	260	2032

		Fugitive Particulate Emissions						ROG Emissions			Controlled Emissions: Fugitive Particulate Emissions						Controlled Emissions: ROG Emissions		
		(lb/day)		(lb/hr)		(lb/yr)		(lb/day)	(lb/hr)	(lb/yr)	(lb/day)		(lb/hr)		(lb/yr)		(lb/day)	(lb/hr)	(lb/yr)
Activity	**Max. Activity per day**	**PM_{10}**	**$PM_{2.5}$**	**PM_{10}**	**$PM_{2.5}$**	**PM_{10}**	**$PM_{2.5}$**	**ROG**	**ROG**	**ROG**	**PM_{10}**	**$PM_{2.5}$**	**PM_{10}**	**$PM_{2.5}$**	**PM_{10}**	**$PM_{2.5}$**	**ROG**	**ROG**	**ROG**
Grading (acres/day)	1,5	1,59	0,17	0,20	0,02	413,60	44,66	0,00	0,00	0,00	1,19	0,13	0,15	0,02	310,20	33,49	0,00	0,00	0,00
Bulldozing (hr/day)	0	0,00	0,00	0,00	0,00	0,00	0,00	0,00	0,00	0,00	0,00	0,00	0,00	0,00	0,00	0,00	0,00	0,00	0,00
Truck Loading (cy/day)	7 852	0,89	0,13	0,11	0,02	230,22	34,86	0,00	0,00	0,00	0,66	0,10	0,08	0,01	172,66	26,15	0,00	0,00	0,00
Paving (acres/day)	0,0	N/A	N/A	N/A	N/A	N/A	N/A	0,00	0,00	0,00	N/A	N/A	N/A	N/A	N/A	N/A	N/A	N/A	N/A
Total [13]		**2,48**	**0,31**	**0,31**	**0,04**	**643,81**	**79,52**	**0,00**	**0,00**	**0,00**	**1,86**	**0,23**	**0,23**	**0,03**	**482,86**	**59,64**	**N/A**	**N/A**	**N/A**

[1] Unless otherwise noted data provided in the Assumptions tab and are based on project specific inputs.

[2] Typical module size based on Module 9 as per data provided by CCL July 2011. Data provided for entrance construction is 12,000 cy/day.

[3] Total area to be paved includes approximately 8 acres for road and 3 acres for new parking area as per assumptions sheet.

[4] Volume of cut / fill for the Berm Construction taken from design drawings (ccl_berm-calcs-r01.pdf).

[5] The Berm schedule was taken as described on the Construction PP - Exhaust tab.

[6] Source: SCAQMD Particulate Matter (PM) 2.5 Significance Thresholds and Calculation Methodology, October 2006. For construction fugitive dust sources, it is assumed that 20.8% of the PM_{10} would be $PM_{2.5}$. For paved and unpaved road fugitive dust sources, it is assumed that 16.9% and 21.2% of the PM_{10} would be $PM_{2.5}$, respectively.

[7] Source: SCAQMD CEQA Air Quality Handbook, November 1993. Table 9-9, assumed soil density of 1.8 ton/yd^3.

[8] Source: Table 3-2 of the WRAP Fugitive Dust Handbook (Countess Environmental, 2006), which is consistent with the approach used by URBEMIS2007, the previously ARB-approved emission calculation estimator.

[9] Source: Section 4.8 of Appendix A of the CalEEMod User's Guide, 2011.

[10] Fugitive Emissions are based on maximum amount of earth disturbed. Emission factors are independent of operating year. Maximum daily activity data provided by CCL, July 2011.

[11] Fugitive dust emissions assumed not to occur on days in which precipitation would be >0.1 inches. Average Los Angeles - South Coast precipitation conditions (33 days/year) were taken from CalEEMod Appendix D, Table 1.1.

[12] Using the assumptions in Appendix A of the Software User's Guide: URBEMIS2007 for Windows (JSA, 2007), up to 25% of the total graded area could be disturbed on the worst-case day.

[13] The Total Daily and Total Hourly emissions are the maximum emissions given the assumed schedule (i.e., that Grading and Excavation activities do not occur simultaneously and that Berm activities may overlap with Grading and/or Excavation activities). The Total Annual emissions represent the sum of all construction activities occurring within the year.

[14] It is assumed that the construction phases excavation and grading could occur simultaneously for the module construction as consistent with the exhaust construction tab.

[15] Totals for Module Construction represent total emissions from construction of one Module since one module is constructed per year.

Appendix C.3
LandGEM Modeling Results

Appendix C.3. LandGEM Modeling Results

Summary of LFG Generation Results for LandGEM Model Runs (First data set with conservative overlap of waste throughput)
WPWMA

Year	LFG Baseline (1979-2050) (cf/yr)	No Future Diversion			PC1&PC2	Plan Concept 1				Plan Concept 2		
		LFG (1979-2018) (cf/yr)	LFG (2019-2050) (cf/yr)	Total LFG (1979-2050) (cf/yr)	LFG (1979-2018) (cf/yr)	LFG (2019-2025) (cf/yr)	LFG (2026-2030) (cf/yr)	LFG (2031-2050) (cf/yr)	Total LFG (1979-2050) (cf/yr)	LFG (2019-2028) (cf/yr)	LFG (2029-2050) (cf/yr)	Total LFG (1979-2050) (cf/yr)
k	0.0325	0.0325	0.0325	0.0325	0.0325	0.0325	0.027	0.024	varies	0.0325	0.024	varies
Lo	115	115	100	varies	115	100	80	65	varies	100	65	varies
1979	0	0		0	0				0			0
1980	418855	418855		418855	418855				418855			418855
1981	9824612	9824612		9824612	9824612				9824612			9824612
1982	19207020	19207020		19207020	19207020				19207020			19207020
1983	28745861	28745861		28745861	28745861				28745861			28745861
1984	45005841	45005841		45005841	45005841				45005841			45005841
1985	69529285	69529285		69529285	69529285				69529285			69529285
1986	97552865	97552865		97552865	97552865				97552865			97552865
1987	128915934	128915934		128915934	128915934				128915934			128915934
1988	161392122	161392122		161392122	161392122				161392122			161392122
1989	204787389	204787389		204787389	204787389				204787389			204787389
1990	242591295	242591295		242591295	242591295				242591295			242591295
1991	279071619	279071619		279071619	279071619				279071619			279071619
1992	313551702	313551702		313551702	313551702				313551702			313551702
1993	347270478	347270478		347270478	347270478				347270478			347270478
1994	380716554	380716554		380716554	380716554				380716554			380716554
1995	409760951	409760951		409760951	409760951				409760951			409760951
1996	439699580	439699580		439699580	439699580				439699580			439699580
1997	468603270	468603270		468603270	468603270				468603270			468603270
1998	495495703	495495703		495495703	495495703				495495703			495495703
1999	526849838	526849838		526849838	526849838				526849838			526849838
2000	562566283	562566283		562566283	562566283				562566283			562566283
2001	605719917	605719917		605719917	605719917				605719917			605719917
2002	651220017	651220017		651220017	651220017				651220017			651220017
2003	699656136	699656136		699656136	699656136				699656136			699656136
2004	736516410	736516410		736516410	736516410				736516410			736516410
2005	773992129	773992129		773992129	773992129				773992129			773992129
2006	812937745	812937745		812937745	812937745				812937745			812937745
2007	853887827	853887827		853887827	853887827				853887827			853887827
2008	886281123	886281123		886281123	886281123				886281123			886281123
2009	912037352	912037352		912037352	912037352				912037352			912037352
2010	932655588	932655588		932655588	932655588				932655588			932655588
2011	952087564	952087564		952087564	952087564				952087564			952087564
2012	969239502	969239502		969239502	969239502				969239502			969239502
2013	986124691	986124691		986124691	986124691				986124691			986124691
2014	1005676432	1005676432		1005676432	1005676432				1005676432			1005676432
2015	1025998469	1025998469		1025998469	1025998469				1025998469			1025998469
2016	1049537699	1049537699		1049537699	1049537699				1049537699			1049537699

Appendix C.3. LandGEM Modeling Results

Summary of LFG Generation Results for LandGEM Model Runs (First data set with conservative overlap of waste throughput)
WPWMA

Year	LFG Baseline (1979-2050) (cf/yr)	No Future Diversion			PC1&PC2	Plan Concept 1				Plan Concept 2		
		LFG (1979-2018) (cf/yr)	LFG (2019-2050) (cf/yr)	Total LFG (1979-2050) (cf/yr)	LFG (1979-2018) (cf/yr)	LFG (2019-2025) (cf/yr)	LFG (2026-2030) (cf/yr)	LFG (2031-2050) (cf/yr)	Total LFG (1979-2050) (cf/yr)	LFG (2019-2028) (cf/yr)	LFG (2029-2050) (cf/yr)	Total LFG (1979-2050) (cf/yr)
k	0.0325	0.0325	0.0325	0.0325	0.0325	0.0325	0.027	0.024	varies	0.0325	0.024	varies
Lo	115	115	100	varies	115	100	80	65	varies	100	65	varies
2017	1077033115	1077033115		1077033115	1077033115				1077033115			1077033115
2018	1109638447	1109638447	0	1109638447	1109638447	0			1109638447	0		1109638447
2019	1143906419	1143906419	60653470	1204559889	1143906419	60653470			1204559889	60653470		1204559889
2020	1177078585	1107327094	120580461	1227907555	1107327094	120580461			1227907555	120580461		1227907555
2021	1209189986	1071917486	179828464	1251745950	1071917486	179828464			1251745950	179828464		1251745950
2022	1240274544	1037640191	238443938	1276084129	1037640191	238443938			1276084129	238443938		1276084129
2023	1270365093	1004459000	296472352	1300931352	1004459000	296472352			1300931352	296472352		1300931352
2024	1299493421	972338862	353958225	1326297087	972338862	353958225			1326297087	353958225		1326297087
2025	1327690296	941245847	410945167	1352191014	941245847	410945167	0		1352191014	410945167		1352191014
2026	1354985504	911147111	467475919	1378623030	911147111	467475919	46419052		1425042082	467475919		1378623030
2027	1381407878	882010858	523592392	1405603251	882010858	452527185	89002073		1423540116	523592392		1405603251
2028	1406985329	853806312	579335702	1433142014	853806312	438056474	131327128		1423189913	579335702	0	1433142014
2029	1431744876	826503678	634746207	1461249885	826503678	424048501	173418614		1423970793	627015548	31899834	1485419060
2030	1455712673	800074115	689863545	1489937660	800074115	410488469	215300633	0	1425863217	606965127	60973693	1468012935
2031	1478914039	774489705	744726665	1519216370	774489705	397362053	256997001	34302295	1463151054	587555869	89954692	1452000267
2032	1501373482	749723421	799373863	1549097284	749723421	384655388	250150920	64524327	1449054056	568767272	118856967	1437347661
2033	1523114727	725749103	853842811	1579591914	725749103	372355051	243487210	94650374	1436241738	550579488	147694554	1424023146
2034	1544160741	702541425	908170595	1610712020	702541425	360448049	237001013	124695128	1424685614	532973305	176481403	1411996133
2035	1564533754	680075871	962393741	1642469612	680075871	348921803	230687600	154673178	1414358452	515930124	205231378	1401237374
2036	1584255288	658328711	1016548249	1674876959	658328711	337764139	224542369	184599022	1405234240	499431943	233958270	1391718924
2037	1603346176	637276971	1070669618	1707946589	637276971	326963269	218560839	214487072	1397288151	483461333	262675801	1383414105
2038	1621826585	616898415	1124792879	1741691295	616898415	316507785	212738649	244351661	1390496511	468001424	291397629	1376297468
2039	1639716035	597171515	1178952625	1776124140	597171515	306386641	207071556	274207054	1384836766	453035885	320137359	1370344759
2040	1657033424	578075433	1233183032	1811258465	578075433	296589147	201555427	304067447	1380287453	438548907	348908548	1365532888
2041	1673797045	559589997	1287517892	1847107889	559589997	287104953	196186240	333946982	1376828172	424525187	377724708	1361839893
2042	1690024607	541695680	1341990637	1883686316	541695680	277924040	190960083	363859751	1374439553	410949912	406599320	1359244911
2043	1705733252	524373579	1396634365	1921007944	524373579	269036710	185873143	393819802	1373103233	397808741	435545832	1357728151
2044	1720939572	507605396	1451481867	1959087263	507605396	260433575	180921713	423841146	1372801830	385087792	464577672	1357270860
2045	1735659631	491373419	1506565648	1997939068	491373419	252105547	176102183	453937765	1373518915	372773627	493708254	1357855300
2046	1749908979	475660501	1561917958	2037578459	475660501	244043829	171411040	484123618	1375238988	360853240	522950978	1359464719
2047	1763702668	460450044	1617570809	2078020852	460450044	236239906	166844863	514412648	1377947460	349314037	552319245	1362083326
2048	1777055268	445725979	1673556000	2119281979	445725979	228685532	162400323	544818789	1381630624	338143830	581826458	1365696268
2049	1789980885	431472754	1729905145	2161377900	431472754	221372729	158074180	575355972	1386275635	327330819	611486030	1370289604
2050	1802493173	417675313	1786649690	2204325003	417675313	214293772	153863280	606038130	1391870495	316863581	641311390	1375850284

Note: This table provides a summary of the LandGem model results, which were initailly set up to provide a conservative estimate of landfill gas generation.
This analysis is noted to include an overlap in waste placement throughput, when waste diversion rates are adjusted.

Appendix C.3. LandGEM Modeling Results

Summary of LFG Generation Results for LandGEM Model Runs (First data set with conservative overlap of waste throughput)
WPWMA

Year	LFG Baseline (1979-2050) (cf/yr)	No Future Diversion			PC1&PC2	Plan Concept 1				Plan Concept 2		
		LFG (1979-2018) (cf/yr)	LFG (2019-2050) (cf/yr)	Total LFG (1979-2050) (cf/yr)	LFG (1979-2018) (cf/yr)	LFG (2019-2025) (cf/yr)	LFG (2026-2030) (cf/yr)	LFG (2031-2050) (cf/yr)	Total LFG (1979-2050) (cf/yr)	LFG (2019-2028) (cf/yr)	LFG (2029-2050) (cf/yr)	Total LFG (1979-2050) (cf/yr)
k	0.0325	0.0325	0.0325	0.0325	0.0325	0.0325	0.027	0.024	varies	0.0325	0.024	varies
Lo	115	115	100	varies	115	100	80	65	varies	100	65	varies

Therfore, this analysis data will be used for a conservative estimate of criteria pollutant and toxic emissions.

Appendix C.3. LandGEM Modeling Results

Summary of LFG Generation Results for LandGEM Model Runs (Second data set with representative estimate of waste throughput)
WPWMA

Year	LFG Baseline (1979-2050) (cf/yr)	No Future Diversion			PC1&PC2	Plan Concept 1				Plan Concept 2		
		LFG (1979-2018) (cf/yr)	LFG (2019-2050) (cf/yr)	Total LFG (1979-2050) (cf/yr)	LFG (1979-2018) (cf/yr)	LFG (2019-2025) (cf/yr)	LFG (2026-2030) (cf/yr)	LFG (2031-2050) (cf/yr)	Total LFG (1979-2050) (cf/yr)	LFG (2019-2028) (cf/yr)	LFG (2029-2050) (cf/yr)	Total LFG (1979-2050) (cf/yr)
k	0.0325	0.0325	0.0325	0.0325	0.0325	0.0325	0.027	0.024	varies	0.0325	0.024	varies
Lo	115	115	100	varies	115	100	80	65	varies	100	65	varies
1979	0	0		0	0				0			0
1980	418855	418855		418855	418855				418855			418855
1981	9824612	9824612		9824612	9824612				9824612			9824612
1982	19207020	19207020		19207020	19207020				19207020			19207020
1983	28745861	28745861		28745861	28745861				28745861			28745861
1984	45005841	45005841		45005841	45005841				45005841			45005841
1985	69529285	69529285		69529285	69529285				69529285			69529285
1986	97552865	97552865		97552865	97552865				97552865			97552865
1987	128915934	128915934		128915934	128915934				128915934			128915934
1988	161392122	161392122		161392122	161392122				161392122			161392122
1989	204787389	204787389		204787389	204787389				204787389			204787389
1990	242591295	242591295		242591295	242591295				242591295			242591295
1991	279071619	279071619		279071619	279071619				279071619			279071619
1992	313551702	313551702		313551702	313551702				313551702			313551702
1993	347270478	347270478		347270478	347270478				347270478			347270478
1994	380716554	380716554		380716554	380716554				380716554			380716554
1995	409760951	409760951		409760951	409760951				409760951			409760951
1996	439699580	439699580		439699580	439699580				439699580			439699580
1997	468603270	468603270		468603270	468603270				468603270			468603270
1998	495495703	495495703		495495703	495495703				495495703			495495703
1999	526849838	526849838		526849838	526849838				526849838			526849838
2000	562566283	562566283		562566283	562566283				562566283			562566283
2001	605719917	605719917		605719917	605719917				605719917			605719917
2002	651220017	651220017		651220017	651220017				651220017			651220017
2003	699656136	699656136		699656136	699656136				699656136			699656136
2004	736516410	736516410		736516410	736516410				736516410			736516410
2005	773992129	773992129		773992129	773992129				773992129			773992129
2006	812937745	812937745		812937745	812937745				812937745			812937745
2007	853887827	853887827		853887827	853887827				853887827			853887827
2008	886281123	886281123		886281123	886281123				886281123			886281123
2009	912037352	912037352		912037352	912037352				912037352			912037352
2010	932655588	932655588		932655588	932655588				932655588			932655588
2011	952087564	952087564		952087564	952087564				952087564			952087564
2012	969239502	969239502		969239502	969239502				969239502			969239502
2013	986124691	986124691		986124691	986124691				986124691			986124691
2014	1005676432	1005676432		1005676432	1005676432				1005676432			1005676432
2015	1025998469	1025998469		1025998469	1025998469				1025998469			1025998469
2016	1049537699	1049537699		1049537699	1049537699				1049537699			1049537699

Appendix C.3. LandGEM Modeling Results

Summary of LFG Generation Results for LandGEM Model Runs (Second data set with representative estimate of waste throughput)
WPWMA

Year	LFG Baseline (1979-2050) (cf/yr)	No Future Diversion			PC1&PC2	Plan Concept 1				Plan Concept 2		
		LFG (1979-2018) (cf/yr)	LFG (2019-2050) (cf/yr)	Total LFG (1979-2050) (cf/yr)	LFG (1979-2018) (cf/yr)	LFG (2019-2025) (cf/yr)	LFG (2026-2030) (cf/yr)	LFG (2031-2050) (cf/yr)	Total LFG (1979-2050) (cf/yr)	LFG (2019-2028) (cf/yr)	LFG (2029-2050) (cf/yr)	Total LFG (1979-2050) (cf/yr)
k	0.0325	0.0325	0.0325	0.0325	0.0325	0.0325	0.027	0.024	varies	0.0325	0.024	varies
Lo	115	115	100	varies	115	100	80	65	varies	100	65	varies
2017	1077033115	1077033115		1077033115	1077033115				1077033115			1077033115
2018	1109638447	1109638447		1109638447	1109638447				1109638447			1109638447
2019	1143906419	1143906419	0	1143906419	1143906419	0			1143906419	0		1143906419
2020	1177078585	1107327094	61866540	1169193634	1107327094	61866540			1169193634	61866540		1169193634
2021	1209189986	1071917486	122992070	1194909556	1071917486	122992070			1194909556	122992070		1194909556
2022	1240274544	1037640191	183425033	1221065224	1037640191	183425033			1221065224	183425033		1221065224
2023	1270365093	1004459000	243212817	1247671817	1004459000	243212817			1247671817	243212817		1247671817
2024	1299493421	972338862	302401799	1274740661	972338862	302401799			1274740661	302401799		1274740661
2025	1327690296	941245847	361037389	1302283236	941245847	361037389			1302283236	361037389		1302283236
2026	1354985504	911147111	419164070	1330311181	911147111	419164070	0		1330311181	419164070		1330311181
2027	1381407878	882010858	476825438	1358836296	882010858	405760230	43819568		1331590656	476825438		1358836296
2028	1406985329	853806312	534064240	1387870552	853806312	392785012	87348228		1333939551	534064240		1387870552
2029	1431744876	826503678	590922416	1417426094	826503678	380224709	130611257		1337339645	583191757	0	1409695435
2030	1455712673	800074115	647441132	1447515246	800074115	368066055	173633611		1341773781	564542713	29830341	1394447169
2031	1478914039	774489705	703660816	1478150521	774489705	356296204	216439937	0	1347225846	546490020	59549883	1380529608
2032	1501373482	749723421	759621199	1509344620	749723421	344902724	210674246	31035486	1336335878	529014608	89173186	1367911215
2033	1523114727	725749103	815361340	1541110443	725749103	333873580	205062145	61955698	1326640526	512098017	118714703	1356561823
2034	1544160741	702541425	870919667	1573461092	702541425	323197121	199599544	92775783	1318113872	495722377	148188788	1346452590
2035	1564533754	680075871	926334007	1606409878	680075871	312862069	194282460	123510777	1310731177	479870390	177609703	1337555964
2036	1584255288	658328711	981641616	1639970327	658328711	302857506	189107017	154175615	1304468849	464525310	206991623	1329845644
2037	1603346176	637276971	1036879214	1674156185	637276971	293172865	184069440	184785135	1299304412	449670929	236348648	1323296549
2038	1621826585	616898415	1092083010	1708981425	616898415	283797915	179166059	215354085	1295216474	435291554	265694806	1317884776
2039	1639716035	597171515	1147288737	1744460252	597171515	274722753	174393298	245897134	1292184700	421371997	295044061	1313587573
2040	1657033424	578075433	1202531678	1780607111	578075433	265937793	169747677	276428877	1290189779	407897553	324410319	1310383305
2041	1673797045	559589997	1257846693	1817436690	559589997	257433753	165225809	306963841	1289213401	394853988	353807438	1308251423
2042	1690024607	541695680	1313268250	1854963929	541695680	249201653	160824399	337516496	1289238227	382227525	383249230	1307172435
2043	1705733252	524373579	1368830450	1893204028	524373579	241232794	156540237	368101258	1290247868	370004825	412749473	1307127877
2044	1720939572	507605396	1424567052	1932172449	507605396	233518761	152370199	398732499	1292226855	358172977	442321913	1308100287
2045	1735659631	491373419	1480511504	1971884923	491373419	226051403	148311246	429424552	1295160620	346719483	471980274	1310073176
2046	1749908979	475660501	1536696961	2012357463	475660501	218822833	144360419	460191719	1299035471	335632243	501738262	1313031006
2047	1763702668	460450044	1593156317	2053606361	460450044	211825414	140514836	491048277	1303838572	324899546	531609574	1316959164
2048	1777055268	445725979	1649922225	2095648204	445725979	205051757	136771696	522008488	1309557919	314510055	561607902	1321843936
2049	1789980885	431472754	1707027120	2138499875	431472754	198494704	133128267	553086600	1316182326	304452794	591746943	1327672491
2050	1802493173	417675313	1764503248	2182178561	417675313	192147329	129581896	584296861	1323701399	294717139	622040401	1334432853

Note: The LandGem model runs were updated in this summary table to provide a more representative estimate of landfill gas generation.
This analysis does not include an overlap in waste placement throughput, when waste diversion rates are adjusted.
Therfore, this analysis data will be used for a more representative estimate of greenhouse gas emissions.

Appendix C.4
Air Dispersion and Health Risk Assessment Modeling Protocol

JACOBS

Renewable Placer

Air Dispersion and Health Risk Assessment Modeling Protocol

May 25, 2021

Western Placer Waste Management Authority

Introduction

This document describes proposed methods to complete a health risk assessment (HRA) to assess potential impacts to human health associated with the Renewable Placer: Waste Action Plan (proposed project). This methodology reflects the Placer County Air Pollution Control District (PCAPCD) 2017 CEQA Air Quality Handbook (PCAPCD, 2017) and Office of Environmental Health Hazard Assessment (OEHHA) 2015 *Guidance Manual for Preparation of Health Risk Assessments* (OEHHA, 2015).

1. Project Summary

The proposed project consists of two separate plan concepts, Plan Concept 1 and Plan Concept 2, which will be analyzed at an equal level. Plan Concept 1 and Plan Concept 2 include similar project elements, but the locations, timing, and characteristics of the elements differ. Proposed project elements are divided into solid waste project elements, complementary/programmatic elements, and supporting elements.

Solid waste project elements are the waste recovery and waste disposal project elements that are needed for Western Placer Waste Management Authority (WPWMA) to continue providing solid waste management services in the near and long term. These project elements include:

- Expanded Operation of the Materials Recovery Facility (MRF) Building
- Expanded and Redesigned Organics Management Operation (Includes Expanded and Redesigned Composting Operation)
- Expanded and Redesigned Construction and Demolition Materials Processing Operation
- Expanded and Redesigned Public Waste Drop-Off Area Operations
- Expanded Landfill Disposal Capacity
- Excavation, Relocation and Reburial of Solid Waste from Older, Unlined Sections of the Landfill

Complementary/programmatic elements are project elements that are not specifically required to provide continued solid waste management services to Participating Agencies but that are important in achieving other project objectives. These project elements include:

- Compatible Technologies
- Pilot Study Area
- University Research Area
- Landfill Gas (LFG) to Compressed Natural Gas (CNG) Area

Supporting elements are the project elements that are required to support the solid waste management and complementary/programmatic elements. These project elements include:

- Recovered Materials Storage Areas
- Stormwater Ponds
- Road Crossings
- Maintenance Areas
- Administrative Buildings
- Facility Parking
- Entrance Facilities

- Wastewater and Water Supply Infrastructure
- Continued Operation of the Existing Landfill Gas-to-Energy (LFGTE) Plant
- Site Perimeter Infrastructure

With the noted exception, solid waste project elements and supporting elements include those activities directly under WPWMA's control[1]. These elements will be evaluated at a project-specific level of detail. Complementary and programmatic elements include those activities that may require third-party involvement and are not fully defined at this time. Complementary/programmatic elements will be evaluated at a program level, with limited quantitative assessment.

Emissions will be estimated for the incremental increases in activity over time associated with Plan Concept 1 and Plan Concept 2 solid waste project elements and supporting elements. Baseline activity levels and future activity levels for the proposed project will be quantified in order to assess the change in activity associated with each plan concept. Emissions will then be estimated for the incremental increase in activity. The baseline year will be 2018, with the project timeframe spanning from the baseline year through 2050. Note that some activities, such as landfilling, are expected to extend beyond the project timeframe, but the analysis will focus on impacts through 2050 due to increasing uncertainty associated with operations occurring more than 30 years in the future.

2. Conducting a Health Risk Assessment

The process to complete an HRA requires both dispersion modeling of the Project-related emissions and characterizing the resultant exposures and health risks using approved risk assessment methodology. The Hotspot and Reporting Program version 2 (HARP2) will be used to calculate risk. This protocol describes the dispersion modeling approach and the use of HARP2 to characterize risk from the facility for comparison to the appropriate thresholds.

The HRA process requires four general steps to estimate health impacts:

(1) identify and quantify project-generated emissions;

(2) evaluate pollutant transport (using air dispersion modeling) to estimate ground-level toxic air contaminant (TAC) concentrations at each receptor location;

(3) assess human exposure; and

(4) use a risk characterization model to estimate the potential health risk at each receptor location.

The following sections describe the methods proposed for this HRA.

3. Air Dispersion Modeling Methodology

The American Meteorological Society/Environmental Protection Agency Regulatory Model (AERMOD) (Version 21112) will be used as recommended in the Environmental Protection Agency (EPA) Appendix W, Guideline on Air Quality Models (EPA, 2017).

AERMOD is a steady-state plume model that simulates air dispersion based on planetary boundary layer turbulence structure and scaling concepts, including treatment of both surface and elevated sources, and both simple and complex terrain. This model is recommended for short-range (less than 50 kilometers

[1] The existing landfill gas-to-energy plant is owned and operated by Energy 2001, Inc. under a long-term lease agreement with the WPWMA. The WPWMA does not have direct control over this operation.

dispersion from the source. The model incorporates the Plume Rise Model Enhancement (PRIME) algorithm for modeling building downwash. AERMOD is designed to accept input data prepared by two specific preprocessor programs, AERMET and AERMAP. AERMOD will be run with the following options:

- Direction-specific building downwash
- Regulatory default options
- Rural dispersion characteristics[2]
- Actual receptor elevations and hill height scales obtained from AERMAP (Version 18081)

3.1 Meteorological Data

A review of the completeness of the nearby meteorological datasets was performed to ensure the selected dataset meets EPA minimum requirement of 90% complete before any data substitution (EPA, 2000). Five years of meteorological data were obtained and processed by Jacobs for the Sacramento International Airport (WBAN ID 93225). The most recent five years of data were processed with AERMET Version 21112 for 2015 through 2019. Upper air data were obtained from the Oakland International Airport station (WBAN ID 23230). The Sacramento International Airport is located approximately 15 southwest miles from the Project and was selected for this analysis since it is the closest airport with 1-minute automated surface observation station (ASOS) data as well as its similar surrounding land cover as the Project. The nearest airport to the Project is the Lincoln Regional Airport located approximately 5 miles north of the Project. The Lincoln Regional Airport was not selected for this analysis because it does not have 1-minute ASOS data sufficient for purposes of dispersion modeling.

All years of meteorological data proposed for this analysis are greater than 99% complete and do not require data substitution. A summary of the meteorological data is included in Table 1. A wind rose for these data is additional included as Figure 1.

Table 1. Meteorological Data Summary

Year	2015	2016	2017	2018	2019
Total Possible Records	8760	8784	8760	8760	8760
Available Records	8715	8742	8709	8732	8723
Calm Records	108	69	96	79	145
Missing/Incomplete Records	45	42	51	28	37
Completeness Percent	99.5%	99.5%	99.4%	99.7%	99.6%

[2] The Project is located in a rural location surrounded by open fields as illustrated in Figure 3.

Figure 1. Meteorological Data Wind Rose

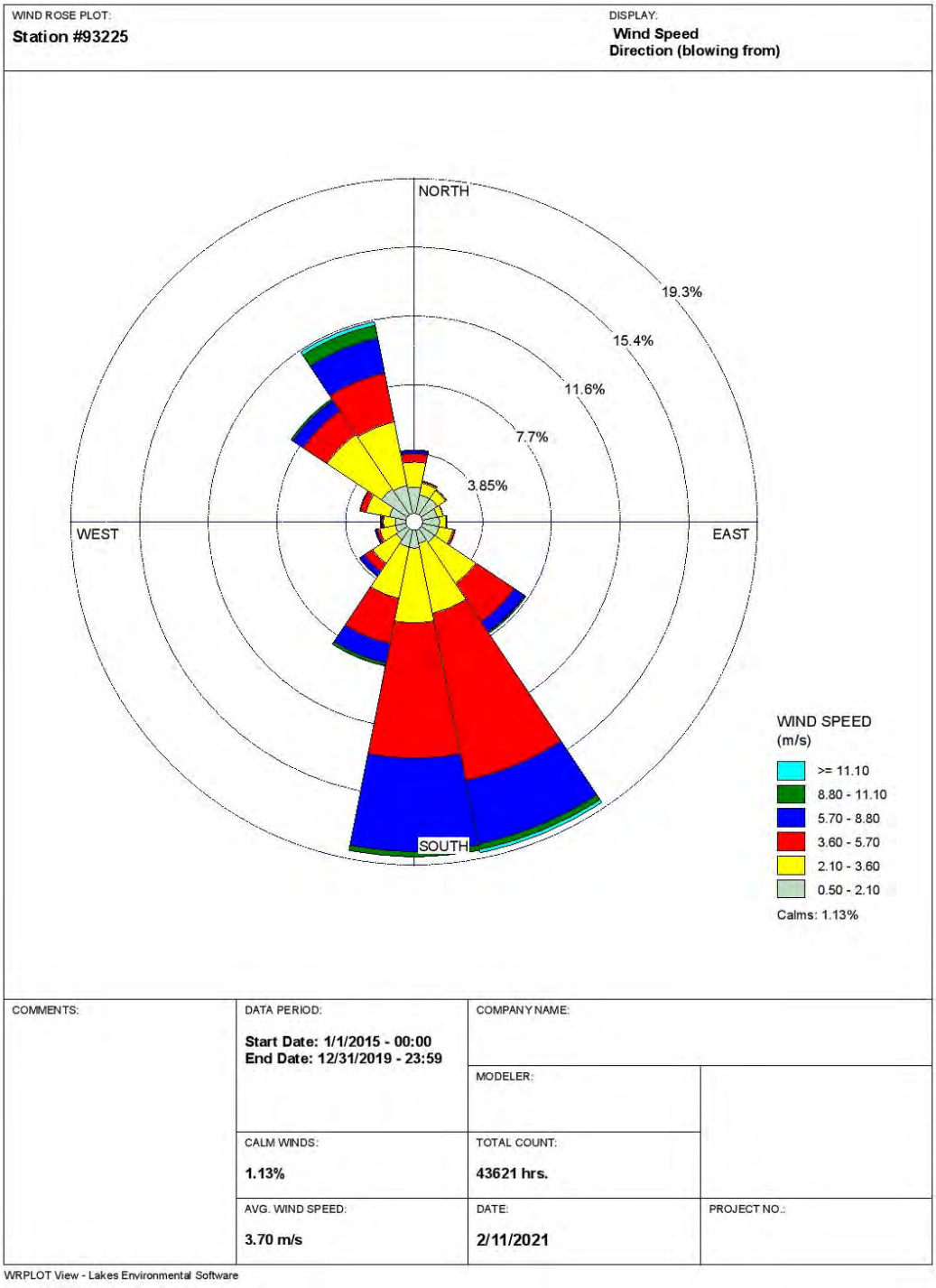

3.3 Cartesian Grid Receptors

The selection of receptors in AERMOD will use a nested Cartesian grid as follows:

- 25-meter (m) spacing along the fenceline
- 25-m spacing from the fenceline to 100 m from grid origin
- 50-m spacing from beyond 100 m to 500 m from the fenceline
- 250-m spacing from beyond 500 m to 5,000 m from the fenceline
- 500-m spacing from beyond 5,000 m to 10,000 m from the fenceline

Discrete cartesian gridded receptors located within the land use types listed below will be classified and analyzed as sensitive receptors.

- Residential
- Certain commercial
- Schools
- Hospitals
- Daycares
- Recreational Areas
- 25-meter grid at the onsite groundskeeper residence[3]

If the maximum receptor lies outside of the 50-m receptor grid, a refined grid with 50-m spacing will be placed around the maximum receptor and AERMOD will be re-run. Additionally, if the concentration gradient shows increasing concentrations at the extent of the receptor grid, the grid will be extended up to 15-kilometers from the site to make sure the maximum predicted concentrations are captured by the AERMOD model.

This risk analysis will analyze both existing receptor locations to assess project-related impacts, as well as a future receptor location scenario for purposes of a cumulative assessment. The existing receptor locations will be characterized based on current land use types and buildings, and the future receptor locations will be characterized based on future developments including residential communities, businesses, and sensitive receptors such as schools.

The proposed receptor grid and sensitive receptor locations are illustrated in Figure 2. All receptors and source locations will be expressed in the Universal Transverse Mercator North American Datum 1983, Zone 10 coordinate system (meters).

[3] Although the groundskeeper residence is located within the project boundary, it is considered an ambient air receptor for purposes of this health risk assessment.

Figure 2. Receptor Grid

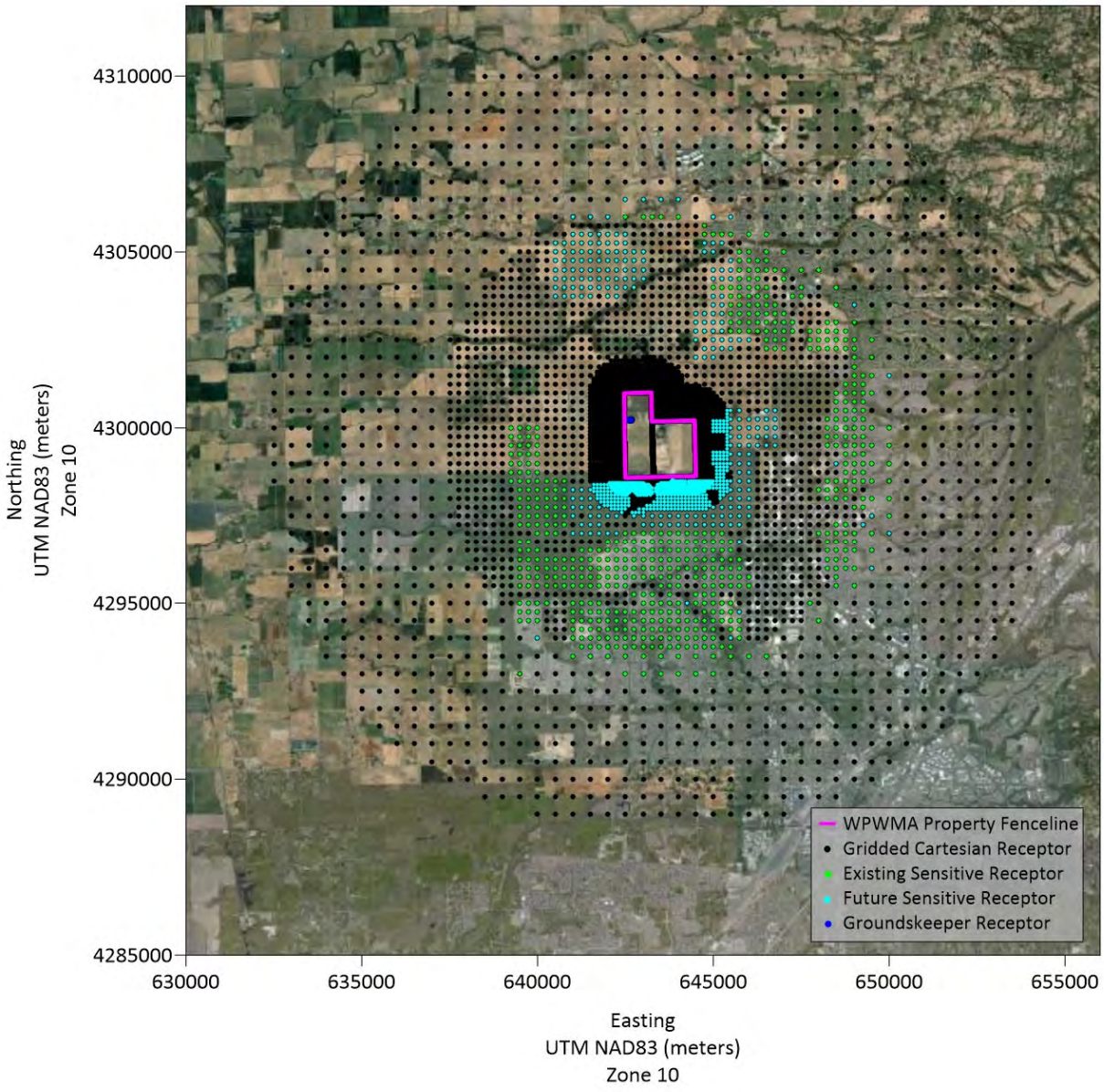

3.4 Fenceline

The ambient air boundary will be defined by the fenceline surrounding the WPWMA-owned property, within which public access is limited. Figure 3 represents the location of the Project and the associated fenceline.

Figure 3. WPWMA Project Location and Fenceline

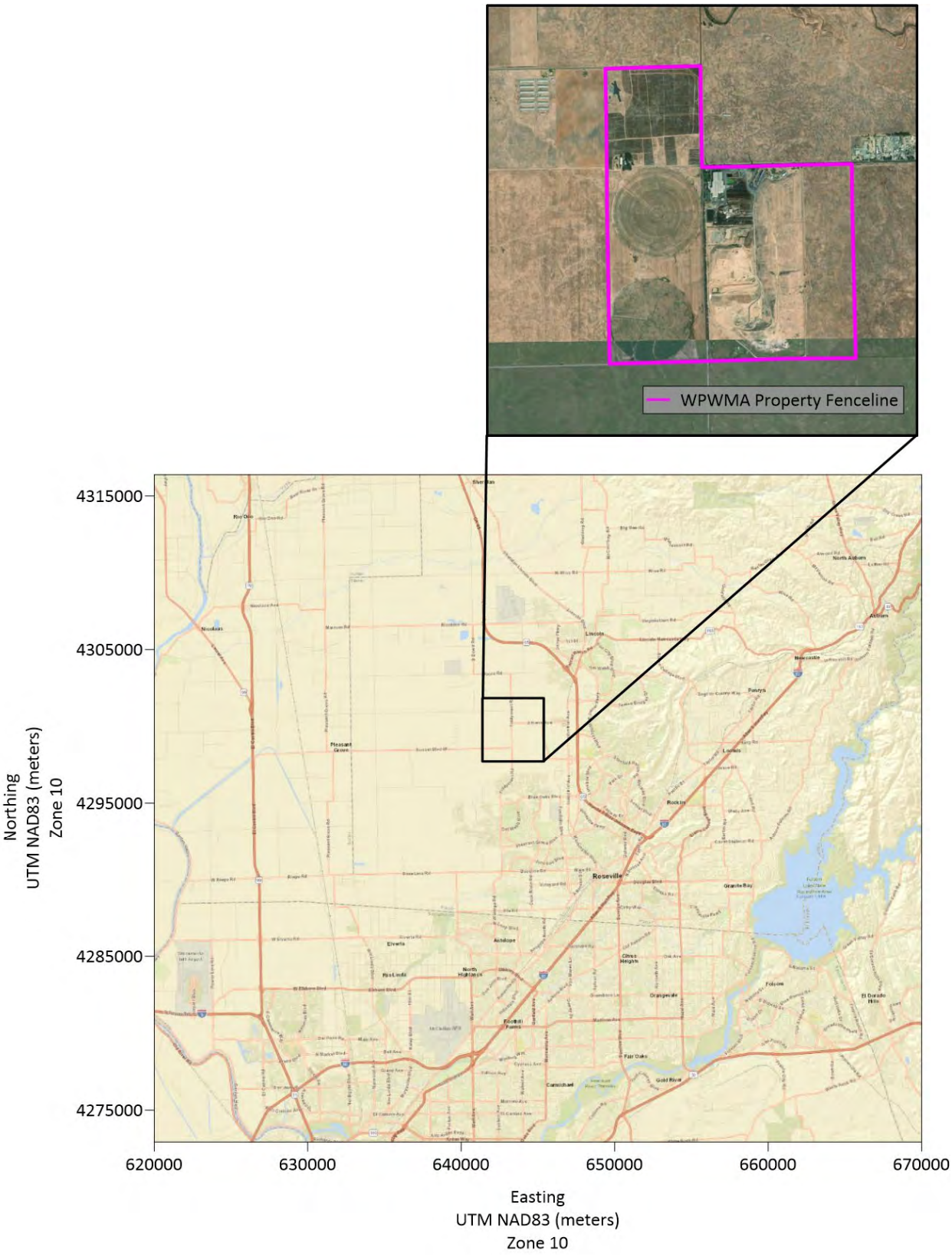

3.5 Building Downwash

Building influences on stationary stacks are calculated by incorporating the updated EPA Building Profile Input Program for use with the plume-rise model-enhancement algorithm (BPIP-PRIME). The stack heights used in the dispersion modeling will be the actual stack height or good engineering practice stack height, whichever is less. A list of all building inputs used in the modeling will be included in the Final Report as an attachment to the Draft Environmental Impact Report (DEIR).

3.6 Source Characterization

Consistent with HRA guidance (OEHHA, 2015), all sources will be modeled with a 1 gram per second emission rate. For sources that are characterized as a group of sources, the 1 gram per second emission rate will be evenly apportioned over the total number of individual sources. The subsections below describe how the sources identified for the Project would be characterized in the AERMOD dispersion model.

3.6.1 Landfill Modules

Landfill operations at the facility are split into specific landfill modules which are operated one at a time. Each landfill module in each of the Project Plan Concepts will be modeled as its own area poly (AREAPOLY) source in AERMOD. Source parameters for these sources will be included in the Final Modeling Report as an attachment to the Draft Environmental Impact Report (DEIR).

3.6.2 Composting Operations

Composting operations in each Project Plan Concept will include emissions from mobile sources such as diesel construction-type equipment, compost curing piles, and compost active storage piles. Each of the active storage piles and curing piles will be modeled as an area source (AREA).

Diesel equipment used to maintain the composting piles will be modeled as a grid of point sources (POINT) with a horizontal stack release spaced approximately 25 m apart over the entire composting area. The horizontal release type is an AERMOD option which negates mechanical plume rise. This conservative approach will be used because it is unknown if all construction equipment will have vertically oriented exhaust stacks. Source parameters for these sources will be included in the Final Modeling Report as an attachment to the Draft Environmental Impact Report (DEIR).

3.6.3 Construction and Demolition Operations

Construction and demolition operations will include emissions from mobile sources such as diesel construction-type equipment. Equipment emissions will be evenly distributed and modeled as a grid of point (POINT) sources with a horizontal stack release spaced approximately 25 m apart over the entire composting area. The horizontal release type is an AERMOD option which negates mechanical plume rise. This conservative approach will be used because it is unknown if all construction equipment will have vertically oriented exhaust stacks. Source parameters for these sources will be included in the Final Modeling Report as an attachment to the Draft Environmental Impact Report (DEIR).

3.6.4 Compatible Manufacturing

Operations and emissions associated with the compatible manufacturing areas are unknown, however emissions will be based on the approximate square footage of the manufacturing facility. Some future processes may require approval on a project-specific basis. As a result of the potential variation in these operations and emissions, estimated hypothetical emissions will be modeled as area poly (AREAPOLY) sources across all potential areas where compatible manufacturing emissions may occur. Source parameters for these sources will be included in the Final Modeling Report as an attachment to the Draft Environmental Impact Report (DEIR).

3.6.5 Onsite Roads

Onsite road emissions will occur from worker commute, utility vehicles, waste haul trucks, and public drop-off operations. All onsite traffic and vehicle routes and associated emissions will be modeled as line sources (LINE) with source parameters developed based upon the U.S. EPA *Haul Road Workgroup Final Report Submission to EPA-OAQPS* (EPA, 2012). Emissions will be calculated for input into AERMOD based upon the length of specific route. The total emissions of the specific route will be divided by the total length of the route and multiplied by the specific length of each line source for an even distribution. Source parameters for these sources will be included in the Final Modeling Report as an attachment to the Draft Environmental Impact Report (DEIR).

3.6.6 Offsite Roads

Offsite road emissions will occur from worker commute, off-site utility vehicles, waste haul trucks, and public drop-off operations. All offsite traffic routes and associated emissions will be modeled as line sources with source parameters developed based upon the U.S. EPA *Haul Road Workgroup Final Report Submission to EPA-OAQPS* (EPA, 2012). Emissions will be calculated for input into AERMOD based upon the length of specific route. The total emissions of the specific route will be divided by the total length of the route and multiplied by the specific length of each line source for an even distribution. Source parameters for these sources will be included in the Final Modeling Report as an attachment to the Draft Environmental Impact Report (DEIR).

3.6.7 Flares

Emissions from the main facility flare and secondary flare will be modeled as point (POINT) sources. Source parameters for these sources will be included in the Final Modeling Report as an attachment to the Draft Environmental Impact Report (DEIR).

3.6.8 Landfill Gas-to-Energy Plant

Emissions from the generator engines associated with the onsite LFGTE plant will be modeled as point (POINT) sources. Source parameters for these sources will be included in the Final Modeling Report as an attachment to the Draft Environmental Impact Report (DEIR).

3.6.9 Generators

Emissions from new onsite emergency generators will be modeled as point (POINT) sources. Source parameters for these sources will be included in the Final Modeling Report as an attachment to the Draft Environmental Impact Report (DEIR).

3.6.10 Materials Recovery Facility

Emissions from the MRF include diesel construction-type equipment and will occur within a large building with large openings along the walls of the building as well as through roof vents. These emissions will be characterized as a grid of volume (VOLUME) sources with 25 m spacing across the MRF building footprint with emissions evenly distributed between all volume sources. Source parameters for these sources will be included in the Final Modeling Report as an attachment to the Draft Environmental Impact Report (DEIR).

3.7 Dispersion Modeling Results

The results from this proposed dispersion modeling analysis will include the maximum 1-hour and annual concentrations at each modeled receptor for each source. These AERMOD predicted concentrations will be used as inputs for the health risk assessment modeling analysis.

4. Health Risk Assessment Methodology

4.1 Emission Inventory

The emissions profiles for each of the modeled sources are outlined below.

4.1.1 Landfill Modules

The landfill gas generation rate estimates are based on the EPA Landfill Gas Emissions Model (LandGEM), version 3.03, 2020. Inputs for the model include in-place and projected refuse amounts, period of operation (years), ultimate methane generation potential ("L_0" value), and the refuse decay rate coefficient ("k" value). Individual TAC emission rates are calculated by multiplying the fugitive LFG emission rate by the concentrations of each TAC in the LFG. Average concentrations of compounds found in LFG are based on the Waste Industry Air Coalition (WIAC) Comparison of Recent Landfill Gas Analyses with Historic AP-42 Values (WIAC, 2001).

LFG throughput for the flares was estimated based on operating records and the future capacity. Similar to the fugitive LFG, the individual TAC emissions rates are calculated by multiplying the volume of flared gas by the concentrations defined by WIAC. The emissions estimates for the flares also incorporate a destruction efficiency, which reduce volatile TAC emissions by 98 to 99.7 percent.

Diesel off-road equipment used to construct and maintain the landfill operations will emit diesel particulate matter (DPM). DPM emissions are estimated using emission factors taken from Appendix D of the CalEEMod User's Guide (CAPCOA, 2017). Emission factors are defined by equipment type, year, and size rating. Particulate matter (PM_{10}) emissions in diesel fueled equipment exhaust are considered equivalent to DPM.

4.1.2 Composting Operations

Composting emissions will include TACs (ammonia and volatile TACs) resulting from active composting and curing. The emission factor for ammonia is defined by the California Air Resources Board (ARB) Emissions Inventory Methodology for Composting Facilities (ARB, 2015a). The emission factors for other volatile TACs are obtained from the Atmospheric Environment Journal study done by UC Davis and CalRecycle: Volatile Organic Compound Emissions from Green Waste Composting: Characterization and Ozone Formation (AE, 2011).

Diesel equipment used to maintain the composting piles will emit DPM. DPM emissions are estimated using emission factors taken from Appendix D of the CalEEMod User's Guide (CAPCOA, 2017). Emission factors are defined by equipment type, year, and size rating. PM_{10} emissions in diesel fueled equipment exhaust are considered equivalent to DPM.

4.1.3 On-Road Mobile Source Emissions (Onsite Road and Offsite Roads)

On-road vehicle exhaust emissions will be estimated using average emission factors for the PCAPCD obtained from ARB's emission inventory tool ("EMission FACtor," EMFAC2017). Emission factors are defined in terms of pounds per vehicle mile traveled. TAC emissions from mobile sources will be limited to DPM. Traffic-flow and vehicle quantities are defined for vehicles entering and exiting specific area of the landfill operation. On-road vehicle counts for the project buildout year will be based on actual vehicles recorded in the 2018 baseline year and an assumed annual increase to account for waste growth and facility usage over time. The average waste haul truck trip distance will be based on trip origin data collected at the WPWMA scale houses for the 2018 baseline year and adjusted to account for waste growth over time based on population forecast data provided in general plans for the surrounding areas. Vehicle traffic related to transport of the solid waste associated with the proposed project includes both commercial haulers and self-haul vehicles. Commercial haulers bring collected waste to the site in medium to heavy duty haul trucks. Self-haul traffic includes small businesses (i.e. landscaper and

contractors) and the public. Once onsite, dedicated operational on-road vehicles and off-road equipment move materials between the various waste recovery and disposal facilities.

4.1.4 Landfill-Gas-to-Energy Plant

The LFGTE Plant is used to produce electricity using LFG as fuel. The facility will include six (6) Caterpillar 3516 Electricity Generators, which will provide auxiliary power for the landfill and associated operations. The individual TAC emissions are calculated by multiplying the LFG combustion rates in each engine by the concentrations defined by WIAC.

4.1.5 Emergency Generators

Three (3) gasoline-fired generators will be used for emergency power. The gasoline generators will provide power for the scale house. The individual TAC emissions will include the organic and inorganic compound TAC emissions, estimated conservatively using emission factors from AP-42, Section 3.3, Gasoline Industrial Engines.

4.1.6 Materials Recovery Facility

Diesel equipment used at the MRF will emit DPM. DPM emissions are estimated using emission factors taken from Appendix D of the CalEEMod User's Guide (CAPCOA, 2017). Emission factors are defined by equipment type, year, and size rating. PM_{10} emissions in diesel fueled equipment exhaust are considered equivalent to DPM.

4.2 Model Selection

The most recent version of Hotspots Analysis and Reporting Program (HARP2) (Version 21081[4]), with the revised unit risk and cancer potency values updated in October 2020, will be used for this analysis. The updated sensitivity factors will be applied in accordance with the *Risk Management Guidance for Stationary Sources of Air Toxics* (ARB, 2015b).

To account for particle toxics deposition on vegetation and the soil, the deposition rate modeled in HARP2 will be conservatively set to 0.05 meters per second for uncontrolled sources for preliminary analysis.

4.3 Risk Evaluation

Risk characterization for toxics emitted by the facility will be conducted using procedures specified by OEHHA guidance (OEHHA, 2015).

As recommended by the 2015 OEHHA and ARB Guidance, a Tier 1 assessment will be performed. The Tier 1 assessment is the most conservative of the four Tier assessment methodologies identified in the OEHHA Guidance and uses a standard point-estimate approach with standard OEHHA assumptions.

The proposed risk assessment will evaluate both carcinogenic (cancer) and non-carcinogenic (non-cancer) health risks as described below for two exposure scenarios. The receptor grids described in Section 3.2 include one run for the existing receptor grid and one for the future receptor grid inclusive of future development plans.

4.3.1 Carcinogenic Risk

Potential cancer risks for residential and sensitive receptors will be evaluated using a scenario assuming 30-year continuous exposure duration, and potential cancer risks for worker and commercial/industrial

[4] https://ww2.arb.ca.gov/resources/documents/harp-air-dispersion-modeling-and-risk-tool

receptors will be evaluated using a scenario assuming a 25-year workplace exposure duration (8-hours per day starting at age 16-years old), as recommended in the OEHHA Guidelines (OEHHA, 2015). Based on the *Risk Management Guidance for Stationary Sources of Air Toxics*, the Derived (Adjusted) Method in HARP2 will be used for the cancer risk evaluation, which uses the 95th percentile breathing rate from the 3rd trimester to 2 years and the 80th percentile inhalation rate from 2 years to 70 years as exposure assumptions for residential cancer risk assessments (ARB, 2015b).

Cancer risks will evaluated based on the annual project-related TAC emission rates from the emission inventory, ground-level concentrations obtained from the dispersion modeling analysis, and values for inhalation cancer potency, oral slope factor, frequency and duration of exposure at the receptor, age-specific sensitivity factors, and breathing rates of the exposed persons from the HARP model. Cancer risk results are expressed as the incremental increase in lifetime cancer risk above baseline levels of risk, typically as a predicted number (of persons) per one million individuals.

4.3.2 Non-Carcinogenic Chronic Exposure

Chronic toxicity is defined as adverse health effects from prolonged chemical exposure caused by chemicals accumulating in the body. To assess chronic noncancer exposures, modeled TAC ground-level concentrations are compared to chemical-specific reference exposure levels (RELs) developed by OEHHA to obtain a chronic hazard index. The REL is a concentration in ambient air at, or below which, no adverse health effects are anticipated. Noncancer chronic health risks are calculated as a hazard quotient, which is the modeled exposure concentration of each contaminant divided by its REL. Hazard quotients for pollutants affecting the same target organ are summed with the resulting totals expressed as hazard indices (HI) for each organ system.

4.3.3 Non-Carcinogenic Acute Exposure

Acute toxicity is defined as adverse health effects caused by a brief chemical exposure of no more than 24 hours. To assess acute noncancer exposures, modeled 1-hour TAC ground-level concentrations are compared to chemical-specific acute RELs to obtain an acute hazard index. Similar to assessing chronic noncancer health risks, acute health risks are calculated as a hazard quotient, which is the modeled exposure concentration of each contaminant divided by its REL. Hazard quotients for pollutants affecting the same target organ are summed with the resulting totals expressed as hazard indices for each organ system.

4.4 Exposure Pathways

For this risk analysis, the following exposure pathways will be included for each risk scenario.

Table 2 Exposure Pathways

Risk Analysis	Model Exposure Pathways	Intake Rate Percentile
Acute	Inhalation	N/A
Non-Cancer Chronic	Inhalation Soil Ingestion Dermal Absorption Mother's Milk Homegrown Produce Beef/Dairy (Farming) Pig/Chicken/Egg (Farming)	N/A
Cancer	Inhalation Soil Ingestion Dermal Absorption Mother's Milk Homegrown Produce Beef/Dairy (Farming) Pig/Chicken/Egg (Farming)	CARB Risk Management Policy Using the Derived Method

4.5 Thresholds

The risk evaluation methodology described above will be used to predict potential excess lifetime cancer risks, chronic health hazard impacts, and acute health hazard impacts. Using the receptor grids described in Section 3.2, cancer, chronic, and acute health risks will be estimated for the locations of the hypothetical maximally exposed individual at a residential location (MEIR), the maximally exposed individual at a workplace location (MEIW), and at sensitive receptors within 10 kilometers from the proposed project site. The modeled point of maximum impacts (PMI) health risk values will be reported as well. For the overall project and cumulative impact analyses, the risk results predicted at the MEIR, MEIW, and sensitive receptor locations will be compared to the following thresholds from the PCAPCD's recommended thresholds[5] of significance (PCAPCD, 2017):

- Incremental increase in cancer risk of 10 in one million individuals
- Chronic hazard index of 1.0
- Acute hazard index of 1.0

5. Presentation of Results

After completion of the HRA, a technical report will outline the approach of the analysis, summarize the results of the analysis, and include electronic files of the dispersion modeling and HARP2 analysis. Comments on this modeling protocol by PCAPCD will also be incorporated into the Final Report as an appendix to the Draft Environmental Impact Report.

6. References

Atmospheric Environment (AE). 2011. Volatile Organic Compound Emissions from Green Waste Composting: Characterization and Ozone Formation. January.

[5] https://www.placer.ca.gov/DocumentCenter/View/2044/Appendix-G-Preparing-a-Health-Risk-Assessment-for-Land-Use-Projects-PDF

California Air Pollution Control Officers Association (CAPCOA). 2017. *California Emissions Estimator Model (CalEEMod) User's Guide*. November.

California Air Resources Board (ARB). 2015a. *California ARB Emissions Inventory Methodology for Composting Facilities*. March.

California Air Resources Board (ARB). 2015b. *Risk Management Guidance for Stationary Sources of Air Toxics*, California Air Pollution Control Officers Association. July.

California Air Resources Board (ARB). 2017. *EMFAC2017 Web Database. Website: https://arb.ca.gov/emfac/2017/*.

Office of Environmental Health Hazard Assessment (OEHHA). 2015. *Guidance Manual for Preparation of Health Risk Assessments*, Air, Community, and Environmental Research Branch. February.

Placer County Air Pollution Control District (PCAPCD). 2017. CEQA Air Quality Handbook.

U.S. Environmental Protection Agency (EPA). 2017. *Appendix W of 40 CFR Part 51—Guideline On Air Quality Models (Revised)*, Office of Air Quality Planning and Standards, Research Triangle Park, North Carolina. January.

U.S. Environmental Protection Agency (EPA). 2012. *U.S. EPA Haul Road Workgroup Final Report Submission to EPA-OAQPS*. March.

U.S. Environmental Protection Agency (EPA). 2000. *Meteorological Monitoring Guidance for Regulatory Modeling Applications*, Office of Air Quality Planning and Standards, Research Triangle Park, North Carolina. February.

WIAC, 2001. Waste Industry Air Coalition Comparison of Recent Landfill Gas Analyses with Historic AP-42 Values, January 2001.

Appendix C.5
Health Risk Assessment Modeling Report

Renewable Placer: Waste Action Plan

Health Risk Assessment Modeling Report

August 2, 2021

Western Placer Waste Management Authority

Contents

1. Introduction 1
2. Project Summary 1
3. Health Risk Assessment 2
4. Air Dispersion Modeling Methodology 3
   - 4.1 Meteorological Data 3
   - 4.2 Cartesian Grid Receptors 4
   - 4.3 Fenceline 6
   - 4.4 Building Downwash 8
   - 4.5 Source Characterization 8
     - 4.5.1 Landfill Modules 8
     - 4.5.2 Composting Operations 8
     - 4.5.3 Construction and Demolition Materials Processing Operations 9
     - 4.5.4 Onsite Roads 10
     - 4.5.5 Offsite Roads 10
     - 4.5.6 Flares 10
     - 4.5.7 Landfill Gas-to-Energy Plant 11
     - 4.5.8 Generators 11
     - 4.5.9 Materials Recovery Facility 11
     - 4.5.10 Facility Construction 12
     - 4.5.11 Waste Relocation 12
5. Health Risk Assessment Methodology 13
   - 5.1 Emission Inventory 13
     - 5.1.1 Landfill Modules 13
     - 5.1.2 Composting Operations 14
     - 5.1.3 On-Road Mobile Source Emissions (Onsite Road and Offsite Roads) 14
     - 5.1.4 Landfill-Gas-to-Energy Plant 14
     - 5.1.5 Emergency Generators 14
     - 5.1.6 Materials Recovery Facility 14
     - 5.1.7 Construction Operations 15
   - 5.2 Model Selection 15
6. Risk Evaluation 15
7. Exposure Pathways 16
8. Thresholds 16
9. Results 17
10. References 20

Appendixes

A Building Downwash Inputs
B Source Layout
C Health Risk Contour Plots
D Groundskeeper Risk Results

Tables

1 Meteorological Data Summary 4
2 Landfill Module Source Parameters 8
3 Compost Area Source Parameters 9
4 Compost Area Equipment Source Parameters 9
5 Construction and Demolition Materials Processing Equipment Source Parameters 9
6 Onsite Road Source Parameters 10
7 Offsite Road Source Parameters 10
8 Flare Source Parameters 11
9 Landfill Gas-to-Energy Plant Engine Source Parameters 11
10 Gasoline Emergency Generator Source Parameters 11
11 Materials Recovery Facility Source Parameters 12
12 Exposure Pathways 16
13 Plan Concept 1 Health Risk Assessment Cancer Risk Summary 17
14 Plan Concept 2 Health Risk Assessment Cancer Risk Summary 18
15 Plan Concept 1 Health Risk Assessment Noncancer Chronic Risk Summary 18
16 Plan Concept 2 Health Risk Assessment Noncancer Chronic Risk Summary 18
17 Plan Concept 1 Health Risk Assessment Noncancer Acute Risk Summary 19
18 Plan Concept 2 Health Risk Assessment Noncancer Acute Risk Summary 19

Figures

1 Meteorological Data Wind Rose 5
2 Receptor Grid 6

1. Introduction

This document describes the basis and results of the health risk assessment (HRA) conducted to assess potential impacts to human health associated with the Renewable Placer: Waste Action Plan (proposed project). The methodology used reflects the Placer County Air Pollution Control District (PCAPCD) *2017 CEQA Air Quality Handbook* (PCAPCD 2017) and Office of Environmental Health Hazard Assessment (OEHHA) 2015 *Guidance Manual for Preparation of Health Risk Assessments* (OEHHA 2015).

This HRA follows the protocol submitted to PCAPCD on May 27, 2021. As of the time this report was prepared, the Western Placer Waste Management Authority (WPWMA) had not received comments on, or approval of, the protocol from PCAPCD. This analysis deviates from the protocol in the following areas:

- The protocol submitted to PCAPCD stated that the 1 gram per second (g/s) emission rate would be evenly apportioned with American Meteorological Society/Environmental Protection Agency Regulatory Model (AERMOD) across all sources in a single source group. The analysis described herein modeled 1 g/s for all sources in a single source group and applied a factor of 1/(Number of sources in source group) to the emissions input into the Hotspots Analysis and Reporting Program (HARP2) health risk assessment modeling.
- There have been revisions to the facility emission inventory since the submittal of the protocol, which include new sources not originally identified. The new sources and their parameters are detailed in this modeling analysis.
- Updates to timing of completion of Plan Concept 1 and Plan Concept 2 have resulted in the need to remove the onsite groundskeeper housing prior to completion of the proposed project. Therefore, the risk results at the groundskeeper residence location are presented as Appendix D to this report for informational purposes only, and comparison to the significance criteria is not applicable.

2. Project Summary

The proposed project consists of two separate plan concepts analyzed as part of this HRA: Plan Concept 1 and Plan Concept 2. Plan Concept 1 and Plan Concept 2 include similar project elements, but the locations, timing, and characteristics of the elements differ. Proposed project elements are divided into solid waste project elements, complementary and programmatic elements, and supporting elements.

Solid waste project elements are the waste recovery and waste disposal project elements required for WPWMA to continue providing solid waste management services in the near and long term. These project elements include the following:

- Expanded operation of the materials recovery facility (MRF) building
- Expanded and redesigned organics management operation (includes expanded and redesigned composting operation)
- Expanded and redesigned construction and demolition materials processing operation
- Expanded and redesigned public waste drop-off area operations
- Expanded landfill disposal capacity
- Excavation, relocation and reburial of solid waste from older, unlined sections of the landfill

Complementary and programmatic elements are project elements not specifically required to provide continued solid waste management services to Participating Agencies but that are important in achieving other project objectives. These project elements include the following:

- Compatible technologies
- Pilot study area
- University research area
- Landfill gas (LFG)-to-compressed natural gas area

Supporting elements are the project elements are required to support the solid waste management and complementary and programmatic elements. These project elements include the following:

- Recovered materials storage areas
- Stormwater ponds
- Road crossings
- Maintenance areas
- Administrative buildings
- Facility parking
- Entrance facilities
- Wastewater and water supply infrastructure
- Continued operation of the existing landfill gas-to-energy (LFGTE) plant
- Site perimeter infrastructure

With the noted exception, solid waste project elements and supporting elements include those activities directly under WPWMA's control.[1] These elements have been evaluated at a project-specific level of detail. Complementary and programmatic elements include those activities requiring third-party involvement and are not fully defined at this time. Complementary and programmatic elements have been evaluated at a program level, with limited quantitative assessment.[2]

Emissions were estimated for the incremental increases in activity over time associated with the Plan Concept 1 and Plan Concept 2 solid waste project elements and supporting elements. Baseline activity levels and future activity levels for the proposed project were quantified in order to assess the change in activity associated with each plan concept. Emissions were then estimated for the incremental increase in activity. The baseline year is 2018, with the project timeframe spanning from the baseline year through 2050. Note that some activities, such as landfilling, are expected to extend beyond the project timeframe, but the analysis focused on impacts through 2050 because of increasing uncertainty associated with operations occurring more than 30 years in the future.

3. Health Risk Assessment

The HRA for the project-related net emissions increases was prepared by predicting pollutant concentrations, using an approved air dispersion model, then characterization of the resultant exposures and health risks by using the approved risk assessment methodology from the OEHHA Guidance (OEHHA 2015). The AERMOD dispersion modeling system was used to predict pollutant concentrations, and the HARP2 was used to calculate risk.

This HRA included four general steps to estimate health impacts:

1) Identification and quantification of project-generated emissions

[1] The existing LFGTE plant is owned and operated by Energy 2001, Inc. under a long-term lease agreement with WPWMA. WPWMA does not have direct control over this operation.

2 Quantitative assessment included construction and operation of 300,000 square feet of building space and 300,000 square feet of parking and roads for complementary and programmatic elements. This analysis did not evaluate the timing or impacts of full buildout of 1,900,000 square feet of building space and of associated parking and roads for complementary and programmatic elements, nor did it provide project-level analysis of the air quality impacts of construction and operation of specific types of industrial activities. Additional project-level analysis and air permits from PCAPCD may be required prior to construction.

2) Evaluation of pollutant transport (using air dispersion modeling) to estimate ground-level toxic air contaminant (TAC) concentrations at each receptor location
3) Assessment of human exposure
4) Use of a risk characterization model to estimate the potential health risk at each receptor location

The following sections describe the methods and results for this HRA.

4. Air Dispersion Modeling Methodology

AERMOD (Version 21112) was used, as recommended in the Environmental Protection Agency (EPA) Appendix W, *Guideline on Air Quality Models* (EPA 2017).

AERMOD is a steady-state plume model that simulates air dispersion based on planetary boundary layer turbulence structure and scaling concepts, including treatment of both surface and elevated sources, and both simple and complex terrain. This model is recommended for short-range (less than 50 kilometers) dispersion from the source. The model incorporates the Plume-Rise Model-Enhancement algorithm for modeling building downwash. AERMOD is designed to accept input data prepared by two specific preprocessor programs: AERMET and AERMAP. AERMOD was run with the following options:

- Direction-specific building downwash
- Regulatory default options
- Rural dispersion characteristics[3]
- Actual receptor elevations and hill height scales obtained from AERMAP (Version 18081)

4.1 Meteorological Data

A review of the completeness of the nearby meteorological datasets was performed to confirm that the selected meteorological dataset met the EPA requirement of greater than 90 percent complete before any data substitution (EPA 2000). Five years of meteorological data were obtained and processed for the Sacramento International Airport (WBAN ID 93225). The most recent 5 years of data were processed with AERMET Version 21112 for calendar years 2015 through 2019. Upper air data were obtained from the Oakland International Airport station (WBAN ID 23230). The Sacramento International Airport is located approximately 15 miles southwest from the proposed project and was selected for this analysis because it is the closest airport with 1-minute automated surface observation station (ASOS) data, and the surrounding land cover is similar to the proposed project. The nearest airport to the proposed project is the Lincoln Regional Airport located approximately 5 miles north of the project. The Lincoln Regional Airport was not selected for this analysis, because there is not 1-minute ASOS data recommended for purposes of dispersion modeling.

All years of meteorological data used for this analysis are greater than the 90 percent completeness requirement and did not require data substitution. A summary of the meteorological data is included in Table 1. A wind rose for these data is included as Figure 1.

[3] The proposed project is located in a rural location surrounded by open fields as illustrated in Figure 3.

Table 1. Meteorological Data Summary

Year	2015	2016	2017	2018	2019
Total Possible Records	8,760	8,784	8,760	8,760	8,760
Available Records	8,715	8,742	8,709	8,732	8,723
Calm Records	108	69	96	79	145
Missing/Incomplete Records	45	42	51	28	37
Completeness Percentage	99.5%	99.5%	99.4%	99.7%	99.6%

4.2 Cartesian Grid Receptors

Receptors are identified locations in the dispersion model to predicted concentrations of modeled pollutants. The receptors included in AERMOD were developed as a nested Cartesian grid as follows:

- 25-meter (m) spacing along the fenceline
- 25-m spacing from the fenceline to 100 m from grid origin
- 50-m spacing from beyond 100 m to 500 m from the fenceline
- 250-m spacing from beyond 500 m to 5,000 m from the fenceline
- 500-m spacing from beyond 5,000 m to 10,000 m from the fenceline

For purposes of an HRA, each receptor would then be characterized as either a residential, or residential or worker receptor type. The Cartesian gridded receptors located within the land-use types listed as follows were classified and analyzed as residential and sensitive receptors:

- Residential
- Certain commercial
- Schools
- Hospitals
- Daycares
- Recreational areas
- 25-meter grid at the onsite groundskeeper residence[4]

Risk was analyzed for existing receptor locations to assess project-related impacts and for a potential future receptor location scenario for purposes of cumulative assessment. The existing receptor locations were characterized based on current land-use types and buildings. For the cumulative assessment, the potential future receptor locations were characterized based on planned developments, including residential communities, businesses, and sensitive receptors such as schools.

Receptors that were determined to be within locations not considered ambient air, such as rights-of-way and within sources, were included in the AERMOD dispersion modeling but excluded from the HRA.

[4] Although the groundskeeper residence is located within the project boundary and would be removed prior to completion of the proposed project, it is included in this HRA for informational purposes. Results at the groundskeeper residence location are presented in the Appendix.

The receptor grid and sensitive receptor locations are illustrated on Figure 2. Receptors and source locations are expressed in the Universal Transverse Mercator (UTM) North American Datum (NAD) 1983, Zone 10 coordinate system (meters).

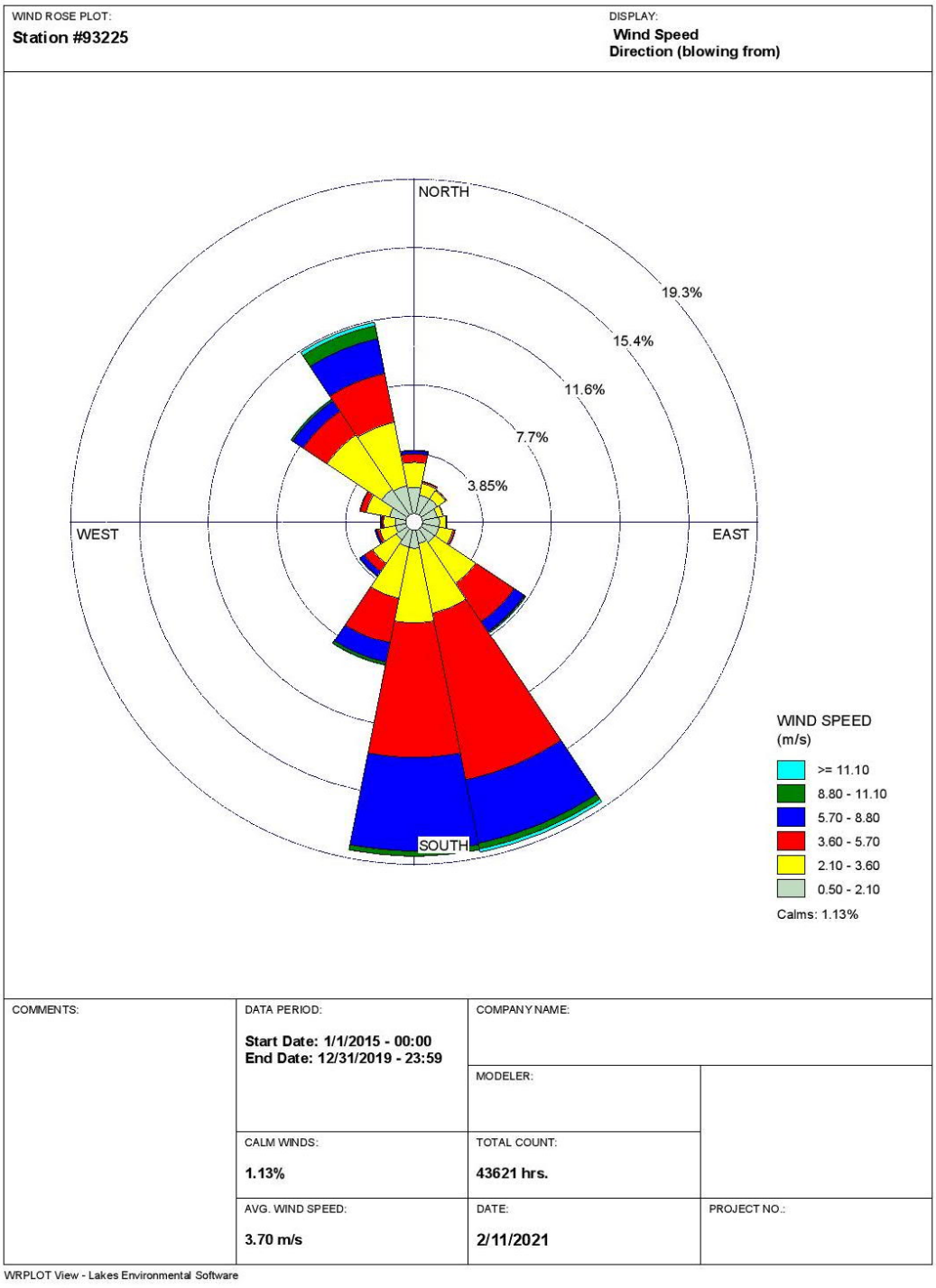

Figure 1. Meteorological Data Wind Rose

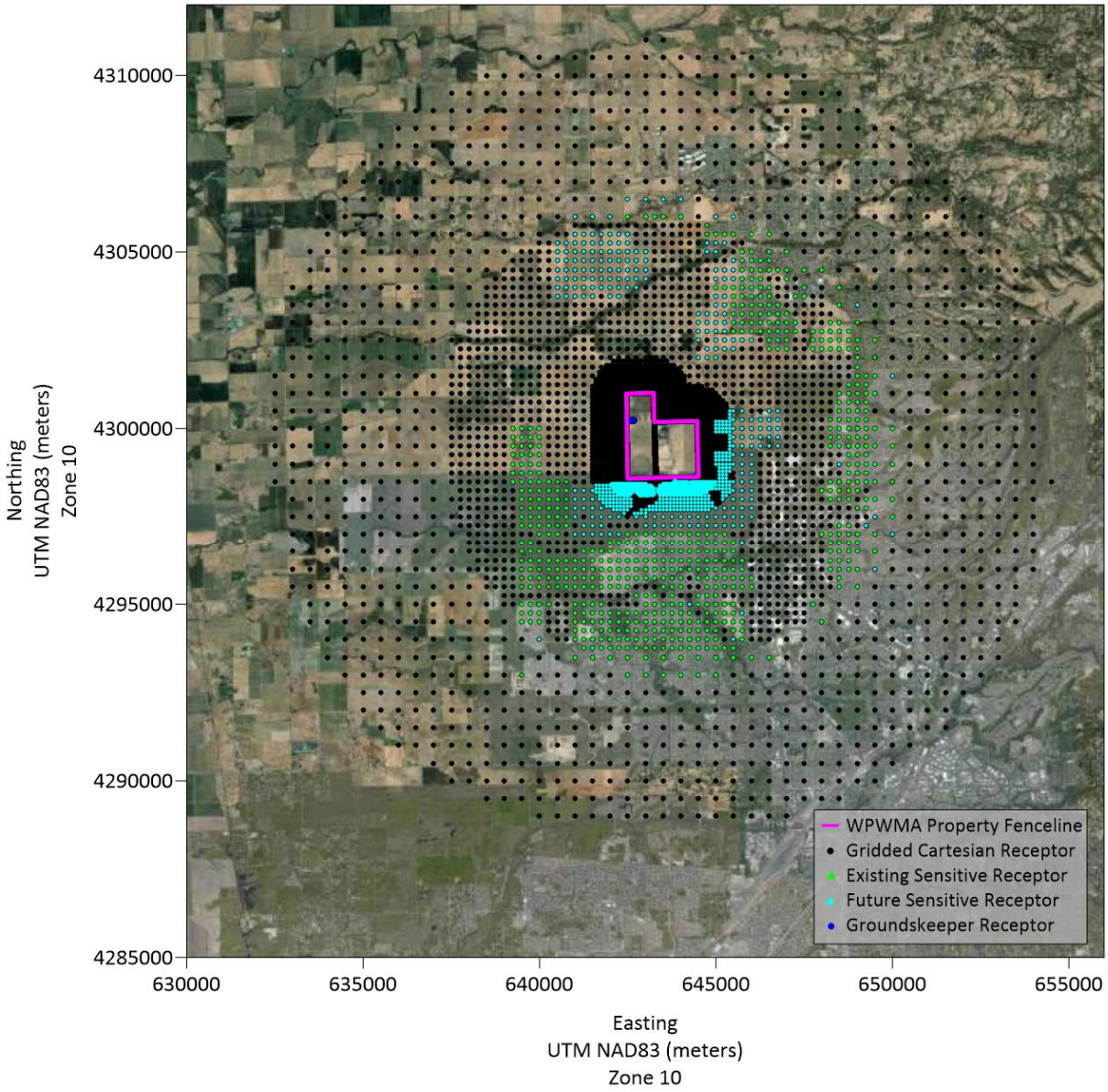

Figure 2. Receptor Grid

4.3 Fenceline

The ambient air boundary is defined by the fenceline surrounding the WPWMA-owned property, within which public access is limited. Figure 3 represents the location of the proposed project and the associated fenceline.

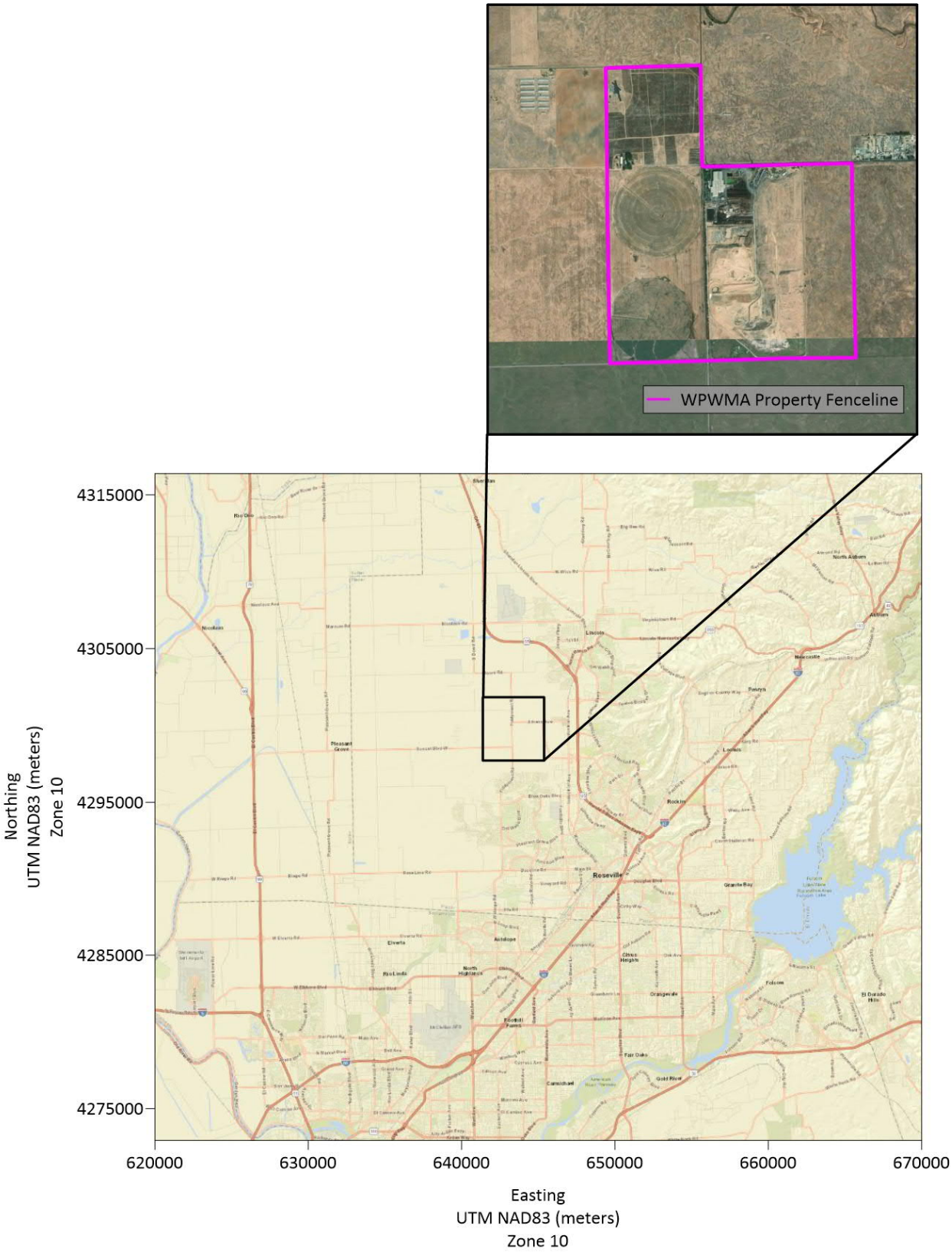

Figure 3. WPWMA Project Location and Fenceline

4.4 Building Downwash

Building influences on stationary stacks were calculated by incorporating the updated EPA Building Profile Input Program for use with the Plume-Rise Model-Enhancement algorithm. A list of building inputs used in the modeling is included in Appendix A.

4.5 Source Characterization

Consistent with HRA guidance (OEHHA 2015), all sources were modeled with a 1 g/s emission rate. The following subsections describe how the sources identified for the proposed project were characterized in the AERMOD dispersion model. This analysis modeled 1 g/s for all sources in a single source group and applied a factor of 1/(Number of sources in source group) to the emissions input into the HARP2 HRA-modeling.

Figures depicting the locations and layouts of the modeled sources are included in Appendix B.

4.5.1 Landfill Modules

Landfill operations at the facility were split into specific landfill modules that would be operated one at a time. Each landfill module in each of the proposed project Plan Concepts was modeled as its own area poly (AREAPOLY) source in AERMOD. Source parameters for these sources are included in Table 2.

The proposed facility landfill modules for each plan concept were included in the dispersion modeling analysis. However, not all modules would be operating during the scoped time period for this analysis. Only modules with waste operations through 2050 were included in the HRA.

Emissions from the landfill modules included fugitive LFG emissions and operational off-road equipment emissions. Fugitive LFG emissions were estimated as the maximum net annual increase in emissions, assumed to occur for the duration of the HRA. Operational off-road equipment emissions would be scattered across the various operational landfill modules during the project. As a result, these equipment emissions were apportioned to each of the landfill modules based upon the area of each module and were assumed to occur for the duration of this HRA.

Table 2. Landfill Module Source Parameters

Source ID	AERMOD Source Type	Base Elevation (m)[a]	Release Height (m)	Initial Vertical Dimension (m)
Varies	AREAPOLY	Varies	0	2.37

[a] Base elevations were obtained from AERMAP and vary by source

4.5.2 Composting Operations

Composting operations for each proposed project plan concept included emissions from mobile sources, such as diesel off-road equipment, and fugitive emissions from compost curing piles, compost stockpiles, and the aerated static pile composting process. Each of the stockpiles, curing piles, and aerated static piles were modeled as area sources (AREA).

Emissions from diesel equipment used to maintain the composting piles were modeled as a grid of point sources (POINT) with a horizontal stack release spaced approximately 25 m apart over the entire composting area. The horizontal release-type option in AERMOD conservatively negates mechanical

plume rise. This conservative approach was used because not all construction equipment would have vertically oriented exhaust stacks.

Source parameters for these composting operation sources are included in Tables 3 and 4.

Table 3. Compost Area Source Parameters

Source ID	AERMOD Source Type	Base Elevation (m)[a]	Release Height (m)	Initial Vertical Dimension (m)
Curing Piles – Varies	AREA	Varies	0	2.84
Aerated Static Piles – Varies	AREA	Varies	0	2.84
Stockpiles – Varies	AREA	Varies	0	2.84

[a] Base elevations were obtained from AERMAP and vary by source.

Table 4. Compost Area Equipment Source Parameters

Source ID	AERMOD Source Type	Base Elevation (m)[a]	Stack Height (m)	Temperature (K)	Exhaust Velocity (m/s)	Stack Diameter (m)
Varies	POINT-Horizontal	Varies	4.6	533	18	0.127

[a] Base elevations were obtained from AERMAP and vary by source.

Note:

K = degree(s) Kelvin

m/s = meter(s) per second

4.5.3 Construction and Demolition Materials Processing Operations

Construction and demolition materials processing operations included emissions from mobile sources, such as diesel off-road equipment, and were assumed to occur during the duration of this HRA. Equipment emissions were evenly distributed and modeled as POINT sources with a horizontal stack release spaced approximately 25 m apart over the entire composting area. The horizontal release-type option in AERMOD conservatively negates mechanical plume rise. This conservative approach was used because it was unknown whether all construction equipment would have vertically oriented exhaust stacks. Source parameters for these sources are included in Table 5.

Table 5. Construction and Demolition Materials Processing Equipment Source Parameters

Source ID	AERMOD Source Type	Base Elevation (m)[a]	Stack Height (m)	Temperature (K)	Exhaust Velocity (m/s)	Stack Diameter (m)
Varies	POINT-Horizontal	Varies	4.6	533	18	0.127

[a] Base elevations were obtained from AERMAP and vary by source.

4.5.4 Onsite Roads

Onsite road emissions would occur from worker commute vehicles, utility vehicles, waste haul trucks, and public drop-off operations, which were assumed to occur during the duration of this HRA. All onsite traffic, vehicle routes, and associated emissions were modeled as line sources (LINE) with source parameters developed based on the EPA's *Haul Road Workgroup Final Report Submission to EPA-OAQPS* (EPA 2012). Emissions were calculated for input into AERMOD, based on the length of the specific route. The total emissions of the specific route were divided by the total length of the route and multiplied by the specific length of each line source for an even distribution. Source parameters for these sources are included in Table 6.

Plan Concept 2 includes new road development in the year 2048. Because this new road arrangement would account for only 2 years of the 30-year analysis, the new routes were not considered as part of this HRA.

Table 6. Onsite Road Source Parameters

Source ID	AERMOD Source Type	Base Elevation (m)[a]	Release Height (m)	Line Width (m)	Initial Vertical Dimension (m)
Varies	LINE	Varies	2.55	15	2.37

[a] Base elevations were obtained from AERMAP and vary by source.

4.5.5 Offsite Roads

Offsite road emissions would occur from worker commute vehicles, offsite utility vehicles, waste haul trucks, and public drop-off operations, which were assumed to occur during the duration of this HRA. All offsite traffic routes and associated emissions were modeled as LINE with source parameters developed based on the EPA's *Haul Road Workgroup Final Report Submission to EPA-OAQPS* (EPA 2012). Emissions were calculated for input into AERMOD, based on the length of specific route. The total emissions of the specific route were divided by the total length of the route and multiplied by the specific length of each line source for an even distribution. Source parameters for these sources are included in Table 7. The offsite road sources are consistent between Plan Concepts 1 and 2.

Table 7. Offsite Road Source Parameters

Source ID	AERMOD Source Type	Base Elevation (m)a	Release Height (m)	Line Width (m)	Initial Vertical Dimension (m)
Varies	LINE	Varies	2.55	15	2.37

[a] Base elevations were obtained from AERMAP and vary by source.

4.5.6 Flares

Emissions from the main facility flare and secondary flare were modeled as POINT sources and were assumed to occur during the duration of this HRA. Source parameters for these sources are included in Table 8. The flare sources are consistent between Plan Concepts 1 and 2.

Table 8. Flare Source Parameters

Source ID	AERMOD Source Type	Base Elevation (m)[a]	Stack Height (m)	Temperature (K)	Exhaust Velocity (m/s)	Stack Diameter (m)
E_MF	POINT	37.28	14.1	1,088	0.56	3.86
E_SF	POINT	37.28	14.1	1,075	2.74	1.83

[a] Base elevations were graded to the elevation of the LFGTE plant building.

4.5.7 Landfill Gas-to-Energy Plant

Emissions from the generator engines associated with the onsite LFGTE plant were modeled as POINT sources and were assumed to occur during the duration of this HRA. Source parameters for these sources are included in Table 9. The LFGTE plant sources are consistent between Plan Concepts 1 and 2.

Table 9. Landfill Gas-to-Energy Plant Engine Source Parameters

Source ID	AERMOD Source Type	Base Elevation (m)[a]	Stack Height (m)	Temperature (K)	Exhaust Velocity (m/s)	Stack Diameter (m)
E_LFG_E#[b]	POINT	37.28	7.62	764	24.23	0.3

[a] Base elevations were graded to the elevation of the LFGTE plant building.

[b] # corresponds to the number of sources in AEMROD.

4.5.8 Generators

Emissions from new onsite emergency generators were modeled as POINT sources and were assumed to occur during the duration of this HRA. Source parameters for these sources are included in Table 10. The generator sources are consistent between Plan Concepts 1 and 2.

Table 10. Gasoline Emergency Generator Source Parameters

Source ID	AERMOD Source Type	Base Elevation (m)[a]	Stack Height (m)	Temperature (K)	Exhaust Velocity (m/s)	Stack Diameter (m)
SH_GEN##[b]	POINT	36.0	0.5	500	20	0.025

[a] Base elevations were obtained from AERMAP and vary by source.

[b] # corresponds to the number of sources in AEMROD.

4.5.9 Materials Recovery Facility

Emissions from MRF operations included diesel off-road equipment and would occur within the MRF building, a large building with openings along the outer walls and roof vents. These emissions were assumed to occur during the duration of this HRA. These emissions were characterized as grid of volume (VOLUME) sources with 25 m spacing across the MRF building footprint, with emissions evenly distributed between all volume sources. Source parameters for these sources are included in Table 11. The MRF sources are consistent between Plan Concepts 1 and 2.

Table 11. Materials Recovery Facility Source Parameters

Source ID	AERMOD Source Type	Base Elevation (m)[a]	Release Height (m)	Initial Horizontal Dimension (m)	Initial Vertical Dimension (m)
MRF##[b]	VOLUME	Varies	6.1	5.7	2.83

[a] Base elevations were obtained from AERMAP and vary by source.

[b] # corresponds to the number of sources in AEMROD.

4.5.10 Facility Construction

Construction would occur throughout operation of the proposed project, as new or existing facilities that are part of the proposed project would be constructed, upgraded, expanded, or replaced. Details regarding calculation of annual construction emissions are included in Section 5.1.

For modeling purposes, annual emissions were apportioned across the major construction sources listed as follows, based on source area footprint, and were conservatively assumed to occur during each of the 30 years of this HRA.

The locations of the following facilities were modeled as having construction emissions during the 30-year proposed project analysis period:

- Stormwater Ponds – Emissions were modeled over the footprint of each planned stormwater pond area, using a methodology consistent with the approach used for construction and demolition materials processing operations in Table 5.
- Public Drop-Off Area – Emissions were modeled over the footprint of the public drop-off area for each plan concept, using a methodology consistent with the approach used for construction and demolition materials processing operations in Table 5.
- Compost Area – Emissions were included with the operational compost area point sources over the footprint of the compost area for each plan concept. Refer to Table 4 for a summary of the associated source parameters.
- Construction and Demolition Materials Processing Area – Emissions were modeled over the footprint of the construction and demolition materials processing area for each plan concept, a using methodology consistent with the approach used for construction and demolition materials processing operations in Table 5.
- Landfill Modules – Emissions for construction of each new landfill module were modeled as part of each landfill module operational source. Refer to Table 2 for a summary of the associated source parameters.

4.5.11 Waste Relocation

Waste relocation operations would occur in landfill modules 1, 10, and 11. For Plan Concept 2, these construction emissions are included in the sitewide construction totals and are therefore captured in existing modeled sources in the same area.

Waste relocation would use existing landfill operational equipment to move waste slowly over time to new, lined landfill modules for Plan Concept 1. This process would not result in any additional emissions greater than the landfill module operational equipment emissions already accounted for Plan Concept 1. Therefore, these landfill modules were not included in this HRA for Plan Concept 1.

5. Health Risk Assessment Methodology

5.1 Emission Inventory

TAC emissions for the incremental increase in activity associated with operation of the proposed project were calculated for the project buildout year of 2050, when maximum operational capacity is expected. The incremental increase is based on overall tonnage increase for each facility with the proposed project and is the same for both Plan Concepts. A peaking factor of 1.28 (obtained by dividing the peak 2018 weekday tonnage by the average 2018 weekday tonnage) was applied to represent a hypothetical future maximum day for purposes of maximum short-term emissions. For purposes of annual emission estimates in the modeling analysis, annual average emissions were used without the use of the short-term peaking factor. For operational sources for which no hourly emission data were available, maximum daily emissions assumed a 14-hour operational day.

Construction would occur throughout operation of the proposed project, as new or existing facilities that are part of the proposed project would be constructed, upgraded, expanded, or replaced. To determine the maximum annual construction emissions from diesel off-road equipment, emissions were calculated for hypothetical peak years for each plan concept. These years generally included construction of major project elements or multiple construction projects estimated to be completed in the same year. Emissions from construction projects completed in all other, non-peak years would be expected to be lower than emissions in the hypothetical peak years.

The annual emission rate values for construction used in the modeling were derived by averaging the annual emission rate values for the individual hypothetical peak years for each plan concept. These annual emissions were conservatively assumed to occur during each of the 30 years of this HRA to account for varying levels of construction over the analysis period. For short-term emissions, the maximum daily emissions calculated assume all construction projects within a given year could overlap and therefore reflect the sum of the maximum daily emissions for each individual construction project divided by an 8-hour workday.

The TAC emission rates used in the HRA analysis were modeled assuming concurrent operational and construction activity. The emissions profiles for each of the modeled sources are outlined as follows.

5.1.1 Landfill Modules

LFG generation rate estimates were based on the EPA Landfill Gas Emissions Model (LandGEM), version 3.03, 2020. Inputs for the model included in-place and projected refuse amounts, period of operation (years), ultimate methane generation potential ("L_0" value), and the refuse decay rate coefficient ("k" value). Individual TAC emission rates were calculated by multiplying the fugitive LFG emission rate by the concentrations of each TAC in the LFG. Average concentrations of compounds found in LFG are based on the Waste Industry Air Coalition (WIAC) *Comparison of Recent Landfill Gas Analyses with Historic AP-42 Values* (WIAC 2001).

LFG throughput for the flares was estimated based on operating records and the remaining plant capacity. Similar to fugitive LFG, individual TAC emissions rates were calculated by multiplying the volume of flared gas by the concentrations defined by WIAC. The emissions estimates for the flares also incorporated a destruction efficiency, which reduced volatile TAC emissions by 98 to 99.7 percent.

Diesel off-road equipment used to construct landfill modules and operate the landfill would emit diesel particulate matter (DPM). DPM emissions were estimated by using emission factors taken from Appendix D of the CalEEMod User's Guide (CAPCOA 2017). Emission factors were defined by equipment type, year,

and size rating. Particulate matter (PM_{10}) emissions in diesel-fueled equipment exhaust are considered equivalent to DPM.

5.1.2 Composting Operations

Composting emissions included TACs (ammonia and volatile TACs) resulting from active composting, stockpiling, and curing. The emission factor for ammonia was defined by the California Air Resources Board (ARB) *Emissions Inventory Methodology for Composting Facilities* (ARB 2015a). Emission factors for other volatile TACs were obtained from the *Atmospheric Environment* journal study done by UC Davis and CalRecycle: "Volatile Organic Compound Emissions from Green Waste Composting: Characterization and Ozone Formation" (Kumar et al. 2011).

Diesel equipment used to maintain the composting piles would emit DPM. DPM emissions were estimated by using emission factors taken from Appendix D of the CalEEMod User's Guide (CAPCOA 2017). Emission factors were defined by equipment type, year, and size rating. PM_{10} emissions in diesel-fueled equipment exhaust are considered equivalent to DPM.

5.1.3 On-Road Mobile Source Emissions (Onsite Road and Offsite Roads)

On-road vehicle exhaust emissions were estimated by using average emission factors for the PCAPCD obtained from ARB's emission inventory tool "EMission FACtor," or EMFAC2017 (ARB 2017). Emission factors were defined in terms of pounds per vehicle mile traveled. TAC emissions from mobile sources were limited to DPM. Traffic-flow and vehicle quantities were defined for vehicles entering and exiting specific areas of the proposed project site. On-road vehicle counts for the project buildout year were based on actual vehicles recorded in the 2018 baseline year and an assumed annual increase to account for waste growth and facility usage over time. The average waste haul truck trip distance was based on trip origin data collected at the WPWMA scale houses for the 2018 baseline year and adjusted to account for waste growth over time based on population forecast data provided in general plans for the surrounding areas. Vehicle traffic related to transport of the solid waste associated with the proposed project would include both commercial haulers and self-haul vehicles. Commercial haulers would bring collected waste to the site in medium to heavy-duty haul trucks. Self-haul traffic would include small businesses (that is, landscaper and contractors) and the public. Once onsite, dedicated operational on-road vehicles and off-road equipment would move materials between the various waste recovery and disposal facilities.

5.1.4 Landfill-Gas-to-Energy Plant

The LFGTE plant produces electricity by using LFG as fuel. The facility has six Caterpillar 3516 Electricity Generators, four of which were in use under the 2018 baseline operating scenario. Operation of the remaining two generators would occur as part of the proposed project. Individual TAC emissions were calculated by multiplying the LFG combustion rates in each engine by the concentrations defined by WIAC.

5.1.5 Emergency Generators

Three new gasoline-fired generators would be used for emergency power at the new scale house that would be built as part of each plan concept. Individual TAC emissions included the organic and inorganic compound TAC emissions, estimated conservatively by using emission factors from AP-42, Section 3.3, Gasoline Industrial Engines.

5.1.6 Materials Recovery Facility

Diesel off-road equipment used at the MRF would emit DPM. DPM emissions were estimated by using emission factors taken from Appendix D of the CalEEMod User's Guide (CAPCOA 2017). Emission factors

were defined by equipment type, year, and size rating. PM_{10} emissions in diesel-fueled equipment exhaust are considered equivalent to DPM.

5.1.7 Construction Operations

Diesel off-road equipment used for facility construction projects would emit DPM. DPM emissions were estimated by using emission factors taken from Appendix D of the CalEEMod User's Guide (CAPCOA 2017). Emission factors were defined by equipment type, year, and size rating. PM_{10} emissions in diesel-fueled equipment exhaust are considered equivalent to DPM.

5.2 Model Selection

The most recent version of HARP2 (Version 21081)[5], with revised unit risk and cancer potency values updated in October 2020, was used for this analysis. The updated sensitivity factors were applied in accordance with the *Risk Management Guidance for Stationary Sources of Air Toxics* (ARB 2015b).

To account for particle toxics deposition on vegetation and the soil, the deposition rate modeled in HARP2 was conservatively set to 0.05 m/s for uncontrolled sources for preliminary analysis.

6. Risk Evaluation

Risk characterization for toxics emitted by the facility was conducted by using procedures specified in the OEHHA Guidance (OEHHA 2015).

The risk assessment evaluated both carcinogenic (cancer) and noncarcinogenic (noncancer) health risks, as described in the following subsections, for two exposure scenarios: existing project scenario and cumulative scenario. The receptor grids described in Section 4.2 include one run for the existing receptor grid and one for the cumulative receptor grid inclusive of potential future development plans. Receptors that were determined to be within locations not considered ambient air such as rights-of-way and within offsite sources were included in the modeling but not included in the HRA.

Carcinogenic Risk. Potential cancer risks for residential and sensitive receptors were evaluated, using a scenario assuming a 30-year continuous exposure duration starting in the third trimester. Potential cancer risks for worker and commercial or industrial receptors were evaluated by using a scenario assuming a 25--year workplace exposure duration (8 hours per day, 5 days per week, starting at age 16), as recommended in the OEHHA Guidance (OEHHA 2015). Based on the Risk Management Guidance for Stationary Sources of Air Toxics, the Derived (Adjusted) Method in HARP2 was used for the cancer risk evaluation, which uses the 95th percentile breathing rate from the third trimester to 2 years and the 80th percentile inhalation rate from 2 years to 70 years as exposure assumptions for residential cancer risk assessments (ARB 2015b). Additionally, the fraction of time spent at home option was applied for age bins greater than or equal to 16 years.

Cancer risks were calculated based on the annual project-related TAC emission rates from the emission inventory, ground-level concentrations obtained from the dispersion modeling analysis, and values for inhalation cancer potency, oral slope factor, frequency and duration of exposure at the receptor, age-specific sensitivity factors, and breathing rates of the exposed persons from the HARP2 model. Cancer risk results are expressed as the incremental increase in lifetime cancer risk greater than baseline levels of risk, typically as a predicted number (of persons) per one million individuals.

[5] https://ww2.arb.ca.gov/resources/documents/harp-air-dispersion-modeling-and-risk-tool

Noncarcinogenic Chronic Exposure. Chronic toxicity is defined as adverse health effects from prolonged chemical exposure caused by chemicals accumulating in the body. To assess long-term chronic noncancer exposures, modeled TAC ground-level concentrations were compared with chemical-specific reference exposure levels (RELs) developed by OEHHA to obtain a chronic hazard index. The REL is a concentration in ambient air at or below which no adverse health effects are anticipated. Noncancer chronic health risks were calculated as a hazard quotient, which is the modeled exposure concentration of each contaminant divided by its REL. Hazard quotients for pollutants affecting the same target organ were summed with the resulting totals expressed as hazard indices (HI) for each organ system.

Noncarcinogenic Acute Exposure. Acute toxicity is defined as adverse health effects caused by a brief chemical exposure of no more than 24 hours. To assess acute noncancer exposures, predicted 1-hour average TAC concentrations were compared with chemical-specific acute RELs to obtain an acute hazard index. Similar to assessing chronic noncancer health risks, acute health risks were calculated as a hazard quotient, which is the modeled exposure concentration of each contaminant divided by its REL. Hazard quotients for pollutants affecting the same target organ were summed with the resulting totals expressed as HI for each organ system.

7. Exposure Pathways

For this risk analysis, exposure pathways listed in Table 12 were included for each risk scenario.

Table 12. Exposure Pathways

Risk Analysis	Model Exposure Pathways	Intake Rate Percentile
Acute	Inhalation	N/A
Noncancer Chronic	Inhalation Soil Ingestion Dermal Absorption Mother's Milk Homegrown Produce Beef/Dairy (Farming) Pig/Chicken/Egg (Farming)	N/A
Cancer	Inhalation Soil Ingestion Dermal Absorption Mother's Milk Homegrown Produce Beef/Dairy (Farming) Pig/Chicken/Egg (Farming)	ARB Risk Management Policy, Using the Derived Method

Note:

N/A = not applicable

8. Thresholds

The risk evaluation methodology described previously was used to predict potential excess lifetime cancer risks, chronic health hazard impacts, and acute health hazard impacts. Using the receptor locations described in Section 4.2, cancer, chronic, and acute health risks were estimated for the locations of the maximally exposed individual at a residential location (MEIR), the maximally exposed individual at a workplace location (MEIW), and at sensitive receptors within 10 kilometers of the proposed project site.

The modeled point of maximum impacts (PMI) health risk values were reported as well. For the overall project and cumulative impact analyses, the risk results predicted at the MEIR, MEIW, and sensitive receptor locations were compared with the following thresholds from the PCAPCD's recommended thresholds[6] of significance (PCAPCD 2017):

- Incremental increase in cancer risk of 10 in one million individuals
- Chronic hazard index of 1.0
- Acute hazard index of 1.0

9. Results

The results of the HRA for both the project-level analysis (existing receptor grid) and cumulative analysis (receptor grid including potential future development) are summarized in Table 13 through Table 18. Figures illustrating the contour plots of the 10 and 1 in a million thresholds for cancer risk and identified impact points in the Tables are included in Appendix C.

Existing receptor impacts for carcinogenic and noncarcinogenic health risk would be below the significance thresholds for both Plan Concepts. Cumulative receptor impacts would be above the significance threshold for cancer risk at future development receptors because of DPM emissions from plan elements in the south-southeastern portions of the facility and DPM emissions from haul truck traffic on roads near the landfill for both Plan Concepts.

Table 13. Plan Concept 1 Health Risk Assessment Cancer Risk Summary

Receptor Type	Receptor Location		Risk	PCAPCD Significance Threshold
	X Coordinate (m)	Y Coordinate (m)	(per one million)	(per one million)
MEIR[a]	645,750	4,298,000	56.9	10
MEIW[b]	645,300	4,300,100	6.7	10
Existing Sensitive Receptor[c]	645,250	4,297,000	4.7	10
Cumulative Sensitive Receptor[c]	645,750	4,298,000	56.9	10

Receptor location coordinates are respective to UTM NAD83 Zone 10

Notes:

[a] The MEIR represents the location of the maximum observed risk at residential receptors as defined by land-use type for the existing analysis or cumulative analysis, or as observed in aerial imagery.

[b] The MEIW is represented as the location of the maximum observed risk at all modeled receptors.

[c] Existing and cumulative sensitive receptor locations within modeled sources were removed from this HRA.

[6] https://www.placer.ca.gov/DocumentCenter/View/2044/Appendix-G-Preparing-a-Health-Risk-Assessment-for-Land-Use-Projects-PDF

Table 14. Plan Concept 2 Health Risk Assessment Cancer Risk Summary

Receptor Type	Receptor Location		Risk	PCAPCD Significance Threshold
	X Coordinate (m)	Y Coordinate (m)	(per one million)	(per one million)
MEIR[a]	645,750	4,298,000	57.1	10
MEIW[b]	645,300	4,300,100	6.8	10
Existing Sensitive Receptor[c]	645,250	4,297,000	4.7	10
Cumulative Sensitive Receptor[c]	645,750	4,298,000	57.1	10

Receptor location coordinates are respective to UTM NAD83 Zone 10

Notes:

[a] The MEIR represents the location of the maximum observed risk at residential receptors as defined by land-use type for the existing analysis or cumulative analysis, or as observed in aerial imagery.

[b] The MEIW is represented as the location of the maximum observed risk at all modeled receptors.

[c] Existing and cumulative sensitive receptor locations within modeled sources were removed from this HRA.

Table 15. Plan Concept 1 Health Risk Assessment Noncancer Chronic Risk Summary

Receptor Type	Receptor Location		Risk	PCAPCD Significance Threshold
	X Coordinate (m)	Y Coordinate (m)	(HI)	(HI)
MEIR[a]	645,300	4,300,100	0.023	1
PMI	643,912	4,300,199	0.203	1
Existing Sensitive Receptor	645,250	4,297,000	0.003	1
Cumulative Sensitive Receptor	645,300	4,300,100	0.023	1

Receptor location coordinates are respective to UTM NAD83 Zone 10

Notes:

[a] The MEIR represents the location of the maximum observed risk at residential receptors as defined by land-use type for the existing analysis or cumulative analysis, or as observed in aerial imagery.

HI = health index, dimensionless

Table 16. Plan Concept 2 Health Risk Assessment Noncancer Chronic Risk Summary

Receptor Type	Receptor Location		Risk	PCAPCD Significance Threshold
	X Coordinate (m)	Y Coordinate (m)	(HI)	(HI)
MEIR[a]	645,300	4,300,100	0.023	1
PMI	643,912	4,300,199	0.218	1

Table 16. Plan Concept 2 Health Risk Assessment Noncancer Chronic Risk Summary

Receptor Type	Receptor Location		Risk	PCAPCD Significance Threshold
	X Coordinate (m)	Y Coordinate (m)	(HI)	(HI)
Existing Sensitive Receptor	643,250	4,296,500	0.003	1
Cumulative Sensitive Receptor	645,300	4,300,100	0.023	1

Receptor location coordinates are respective to UTM NAD83 Zone 10

Note:

[a] The MEIR represents the location of the maximum observed risk at residential receptors as defined by land-use type for the existing analysis or cumulative analysis, or as observed in aerial imagery.

Table 17. Plan Concept 1 Health Risk Assessment Noncancer Acute Risk Summary

Receptor Type	Receptor Location		Risk	PCAPCD Significance Threshold
	X Coordinate (m)	Y Coordinate (m)	(HI)	(HI)
PMI[a]	642,475	4,299,857	0.71	1
MEIR[b]	642,350	4,298,450	0.21	1
Existing Sensitive Receptor	640,000	4,300,000	0.12	1
Cumulative Sensitive Receptor	642,350	4,298,450	0.21	1

Receptor location coordinates are respective to UTM NAD83 Zone 10

Notes:

[a] The PMI is included as part of the acute risk analysis since a short-term exposure duration is possible at any modeled location.

[b] The MEIR represents the location of the maximum observed risk at residential receptors as defined by land-use type for the existing analysis or cumulative analysis, or as observed in aerial imagery.

Table 18. Plan Concept 2 Health Risk Assessment Noncancer Acute Risk Summary

Receptor Type	Receptor Location		Risk	PCAPCD Significance Threshold
	X Coordinate (m)	Y Coordinate (m)	(HI)	(HI)
PMI[a]	643,270	4,299,781	0.69	1
MEIR[b]	645,000	4,299,900	0.20	1
Existing Sensitive Receptor	640,750	4,298,500	0.10	1

Table 18. Plan Concept 2 Health Risk Assessment Noncancer Acute Risk Summary

Receptor Type	Receptor Location		Risk	PCAPCD Significance Threshold
	X Coordinate (m)	Y Coordinate (m)	(HI)	(HI)
Cumulative Sensitive Receptor	645,000	4,299,900	0.20	1

Receptor location coordinates are respective to UTM NAD83 Zone 10

Notes:

[a] The PMI is included as part of the acute risk analysis since a short-term exposure duration is possible at any modeled location.

[b] The MEIR represents the location of the maximum observed risk at residential receptors as defined by land-use type for the existing analysis or cumulative analysis, or as observed in aerial imagery.

10. References

California Air Pollution Control Officers Association (CAPCOA). 2017. *California Emissions Estimator Model (CalEEMod) User's Guide*. November.

California Air Resources Board (ARB). 2015a. *California ARB Emissions Inventory Methodology for Composting Facilities*. March.

California Air Resources Board (ARB). 2015b. *Risk Management Guidance for Stationary Sources of Air Toxics*, California Air Pollution Control Officers Association. July.

California Air Resources Board (ARB). 2017. *EMFAC2017 Web Database.* https://arb.ca.gov/emfac/2017/.

Kumar, Anuj, Christopher Alaimo, Robert Horowitz, Frank Mitloehner, Michael Kleeman, and Peter Green. 2011. "Volatile organic compound emissions from green waste composting: Characterization and ozone formation." *Atmospheric Environment.* – Vol. 45. No. 10. pp. 1841–1848.

Office of Environmental Health Hazard Assessment (OEHHA). 2015. *Guidance Manual for Preparation of Health Risk Assessments*, Air, Community, and Environmental Research Branch. February.

Placer County Air Pollution Control District (PCAPCD). 2017. CEQA Air Quality Handbook.

U.S. Environmental Protection Agency (EPA). 2017. *Appendix W of 40 CFR Part 51—Guideline On Air Quality Models (Revised)*. Office of Air Quality Planning and Standards, Research Triangle Park, North Carolina. January.

U.S. Environmental Protection Agency (EPA). 2012. *U.S. EPA Haul Road Workgroup Final Report Submission to EPA-OAQPS*. March.

U.S. Environmental Protection Agency (EPA). 2000. *Meteorological Monitoring Guidance for Regulatory Modeling Applications*. Office of Air Quality Planning and Standards, Research Triangle Park, North Carolina. February.

Waste Industry Air Coalition (WIAC). 2001. *Waste Industry Air Coalition Comparison of Recent Landfill Gas Analyses with Historic AP-42 Values*. January.

Appendix A
Building Downwash Inputs

Appendix A. Building Downwash Inputs

Table A1 – Building Summary

Building ID	Building Description	Base Elevation (m)[a]	Height (ft)
LFG_EP	Landfill Gas-To-Energy Plant	37.28	20

[a] Base were obtained from AERMAP.

Table A2. Building Coordinates

Building ID	X Coordinate #1	Y Coordinate #1	X Coordinate #1	Y Coordinate #1	X Coordinate #1	Y Coordinate #1	X Coordinate #1	Y Coordinate #1
LFG_EP	643,904	4,300,118	643,932	4,300,143	643,943	4,300,131	643,914	4,300,106

Appendix B
Source Layout

Appendix B. Source Layout

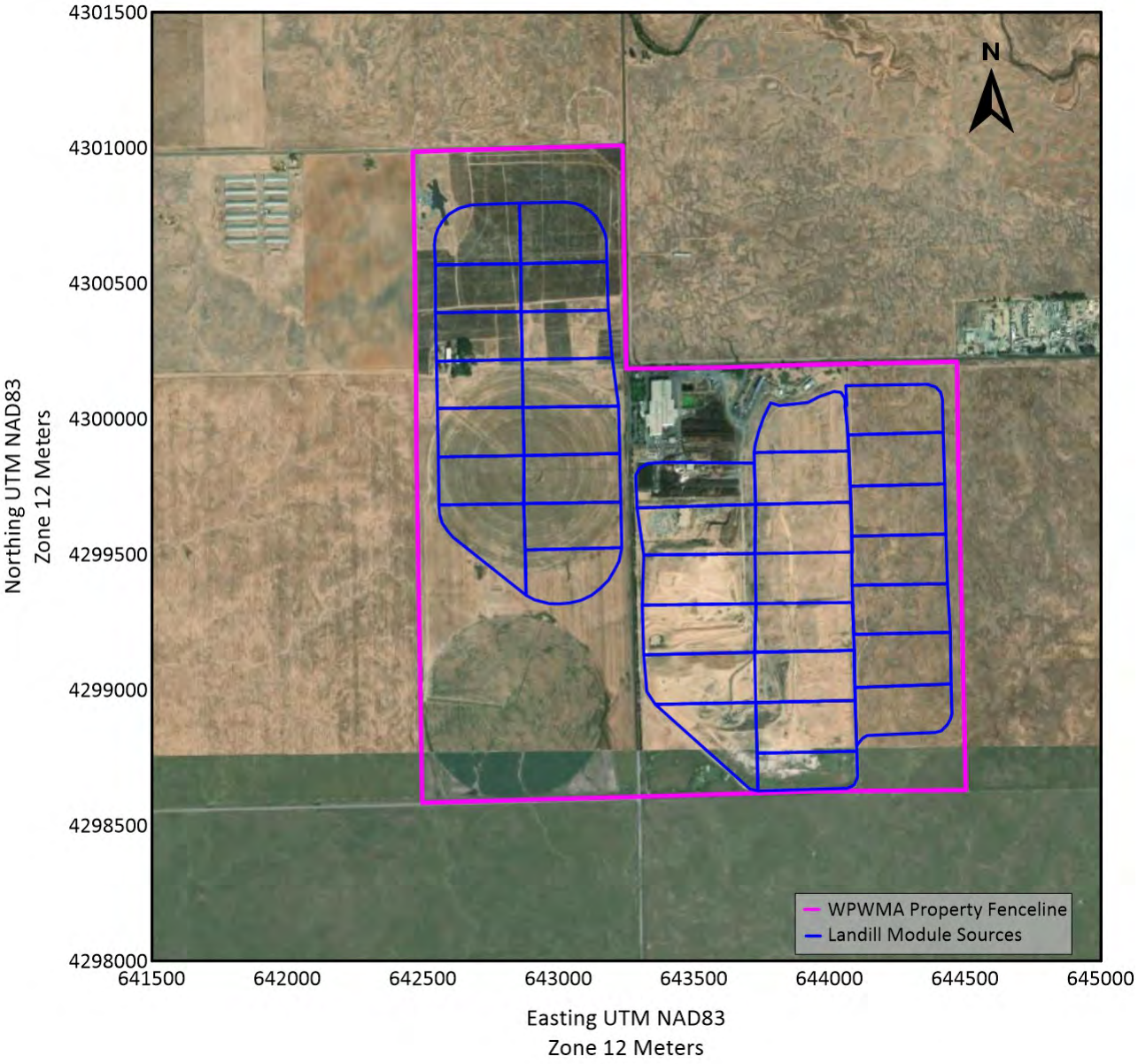

Figure B-1. Landfill Module Source Layout

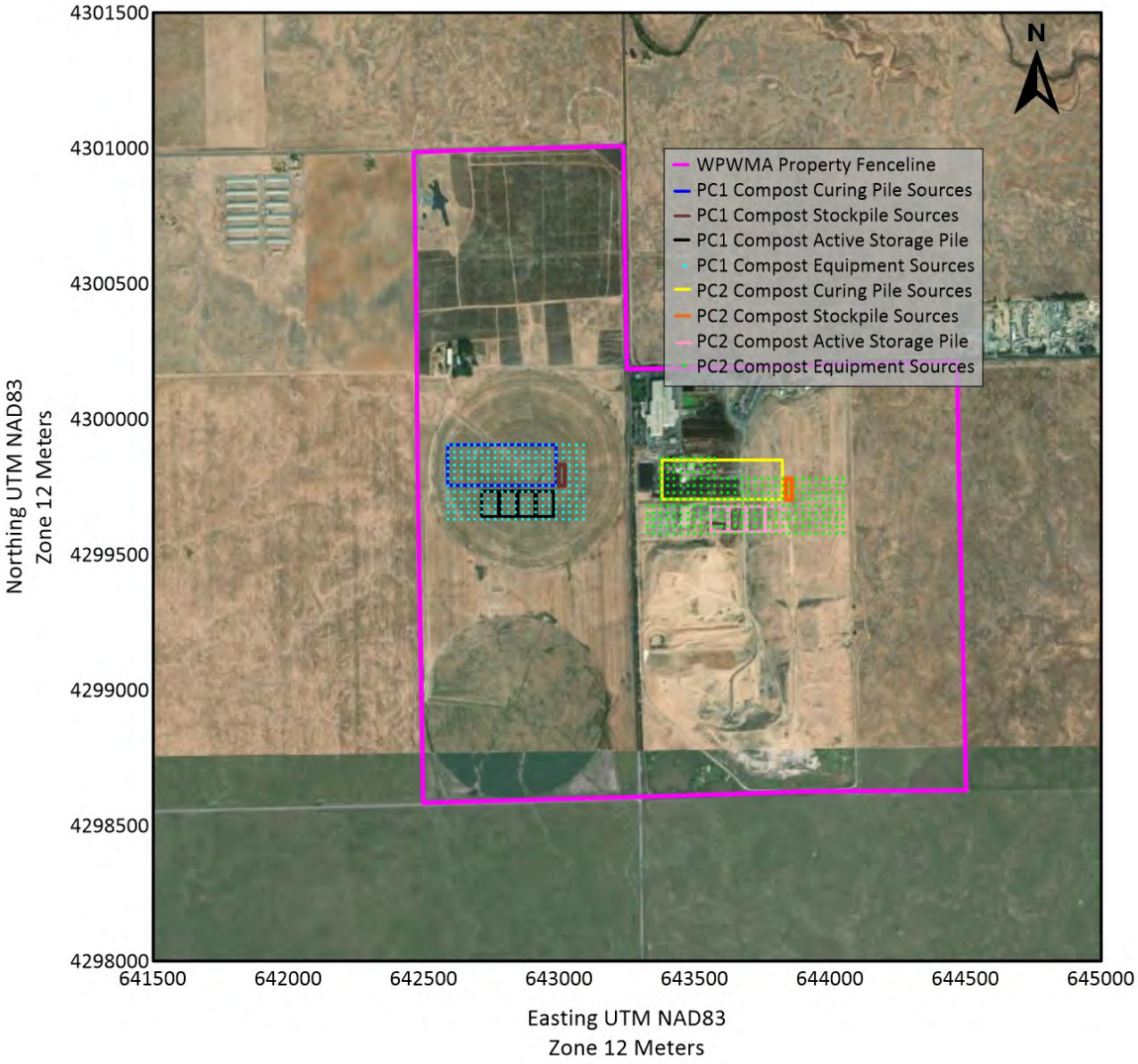

Figure B-2. Compost Operations Source Layout

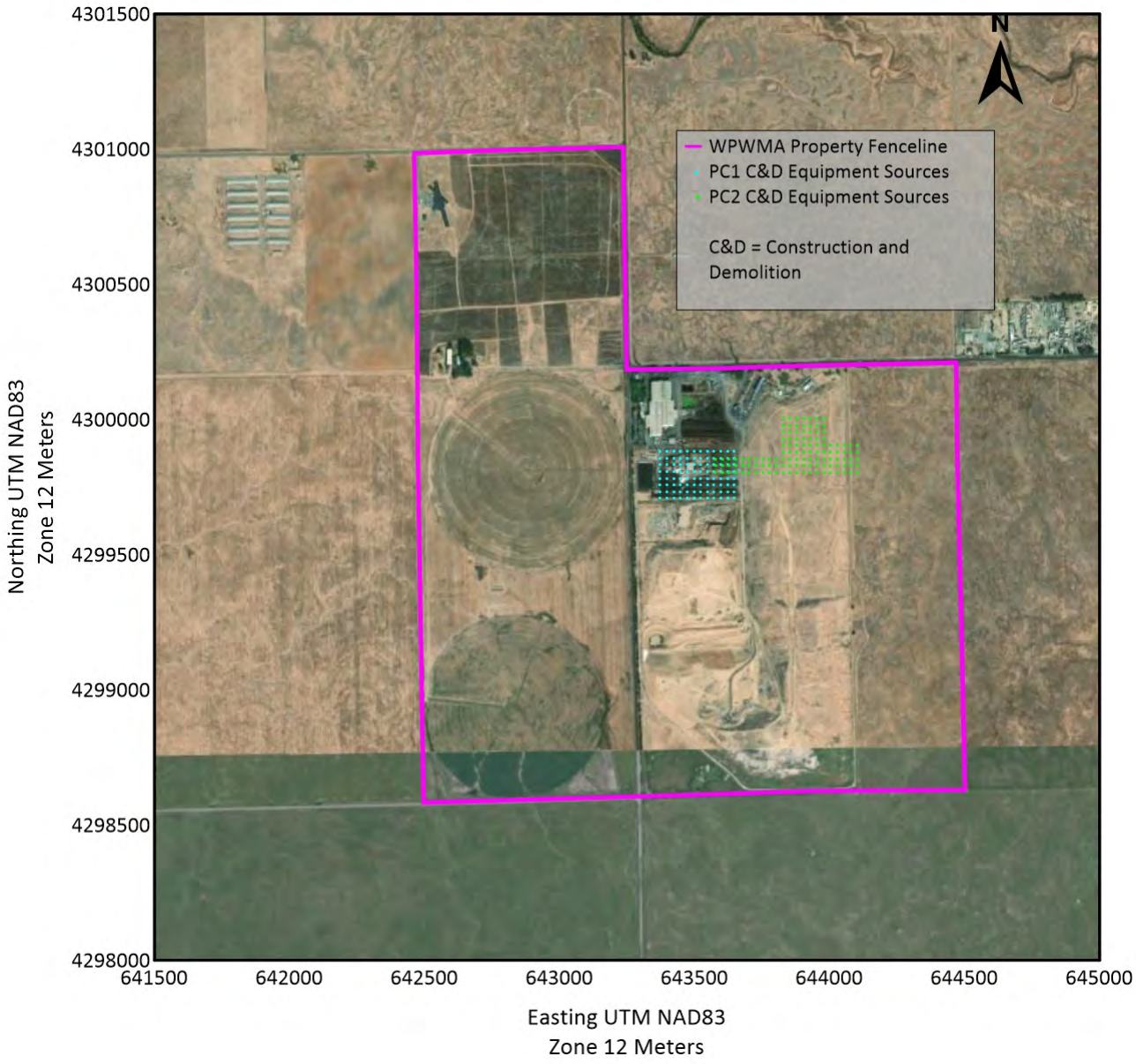

Figure B-3. Construction and Demolition Materials Processing Operation Source Layout

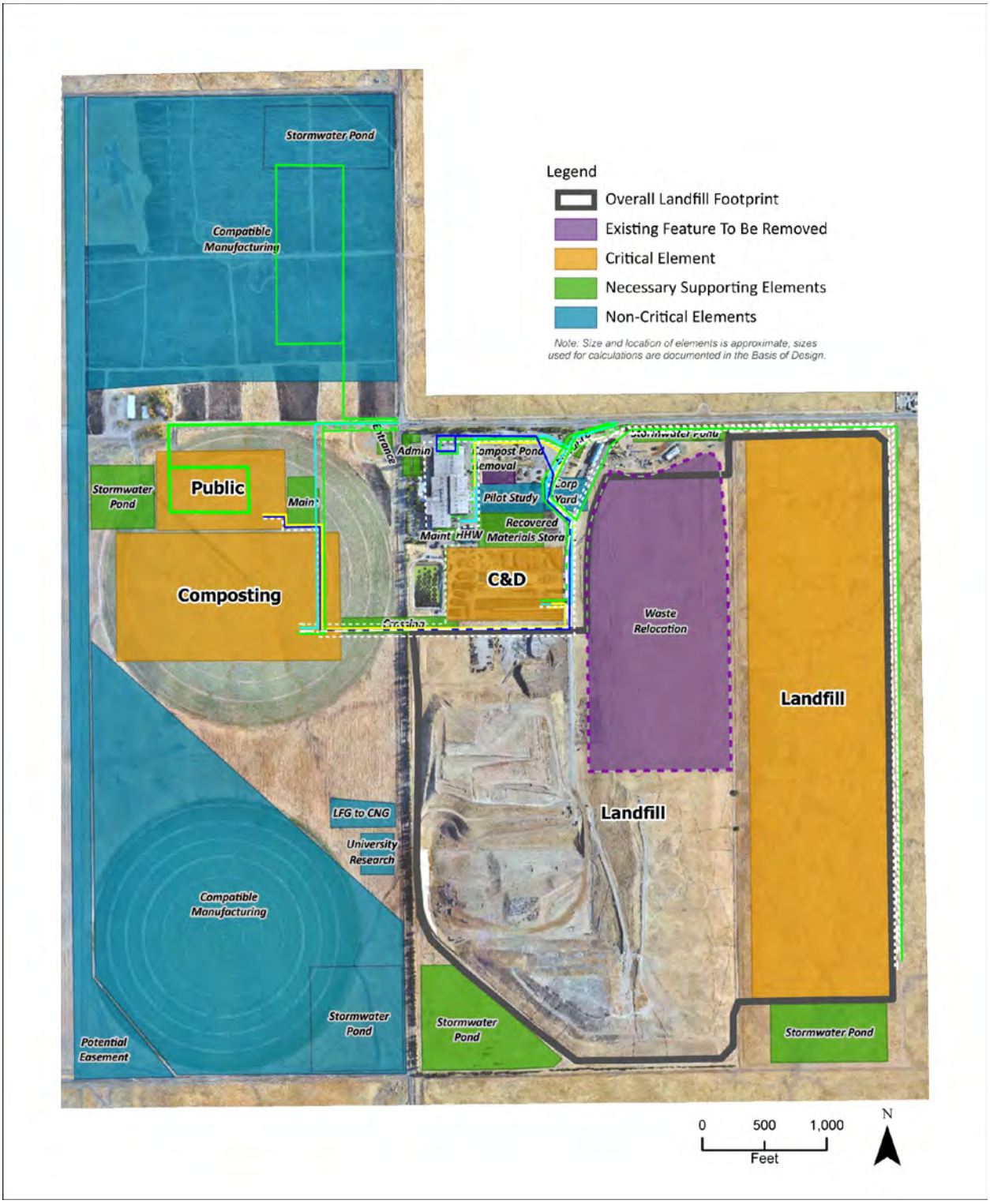

Figure B-4. Plan Concept 1 Onsite Roads Source Layout

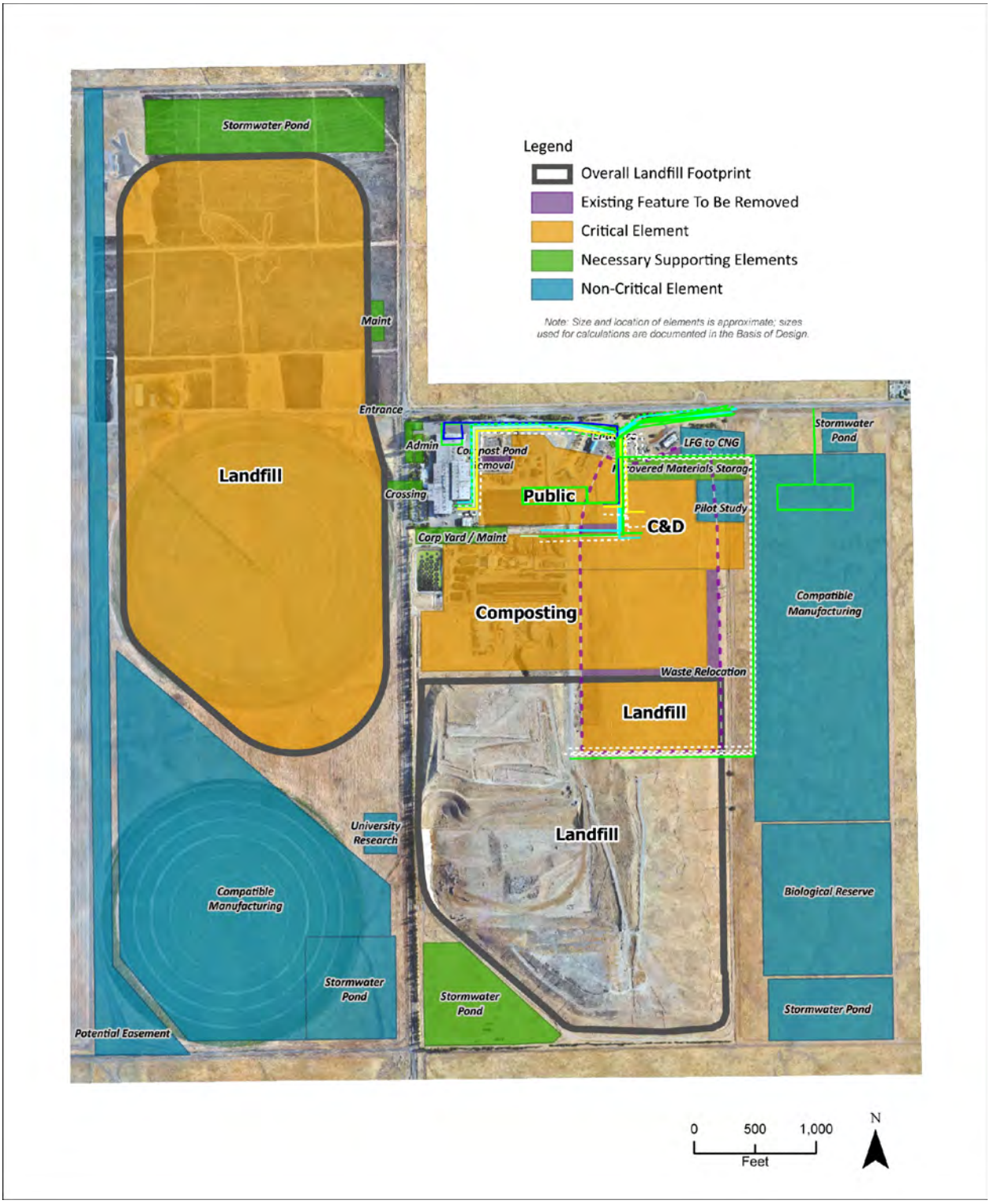

Figure B-5. Plan Concept 2 Onsite Roads Source Layout

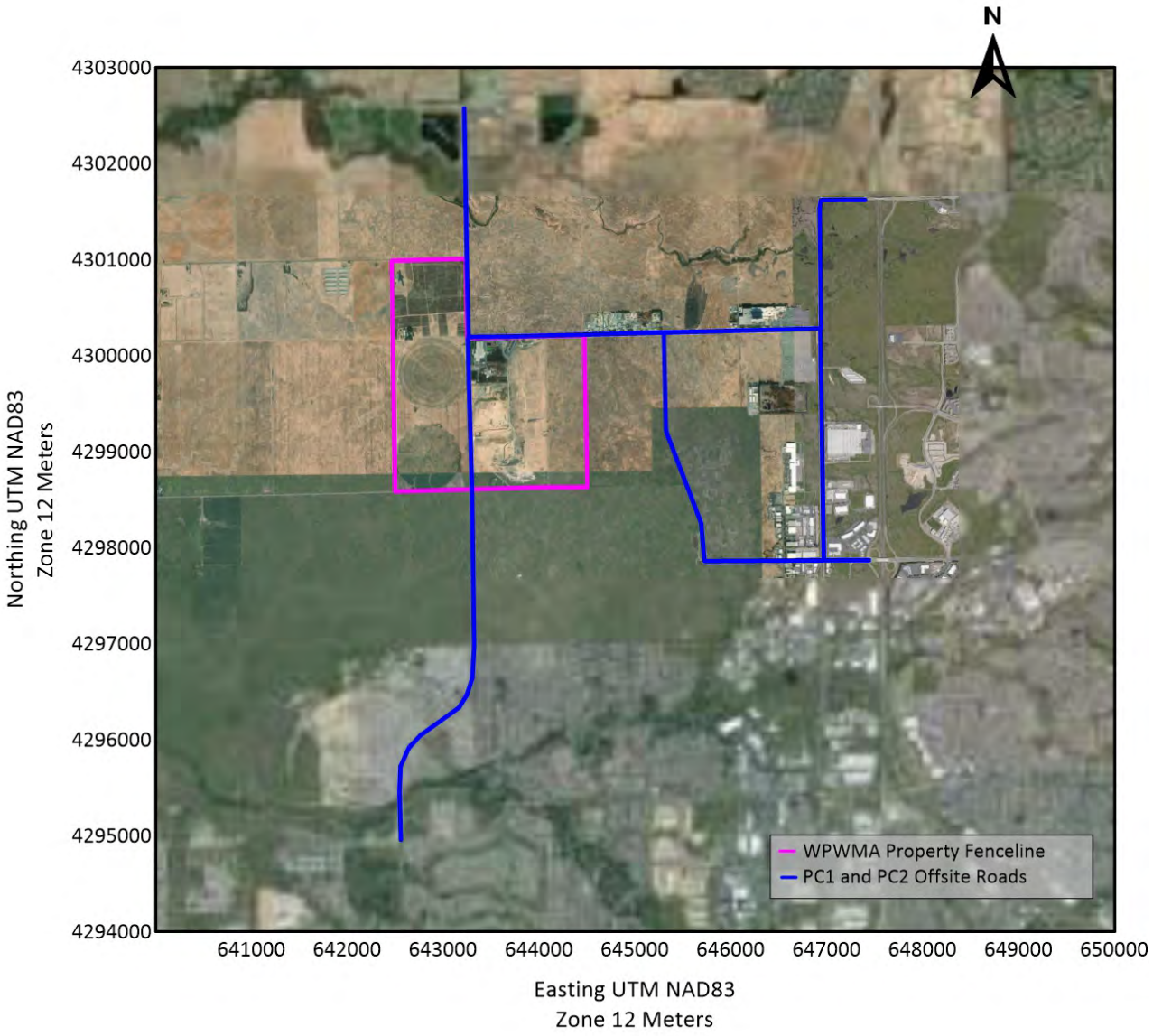

Figure B-6. Offsite Roads Source Layout

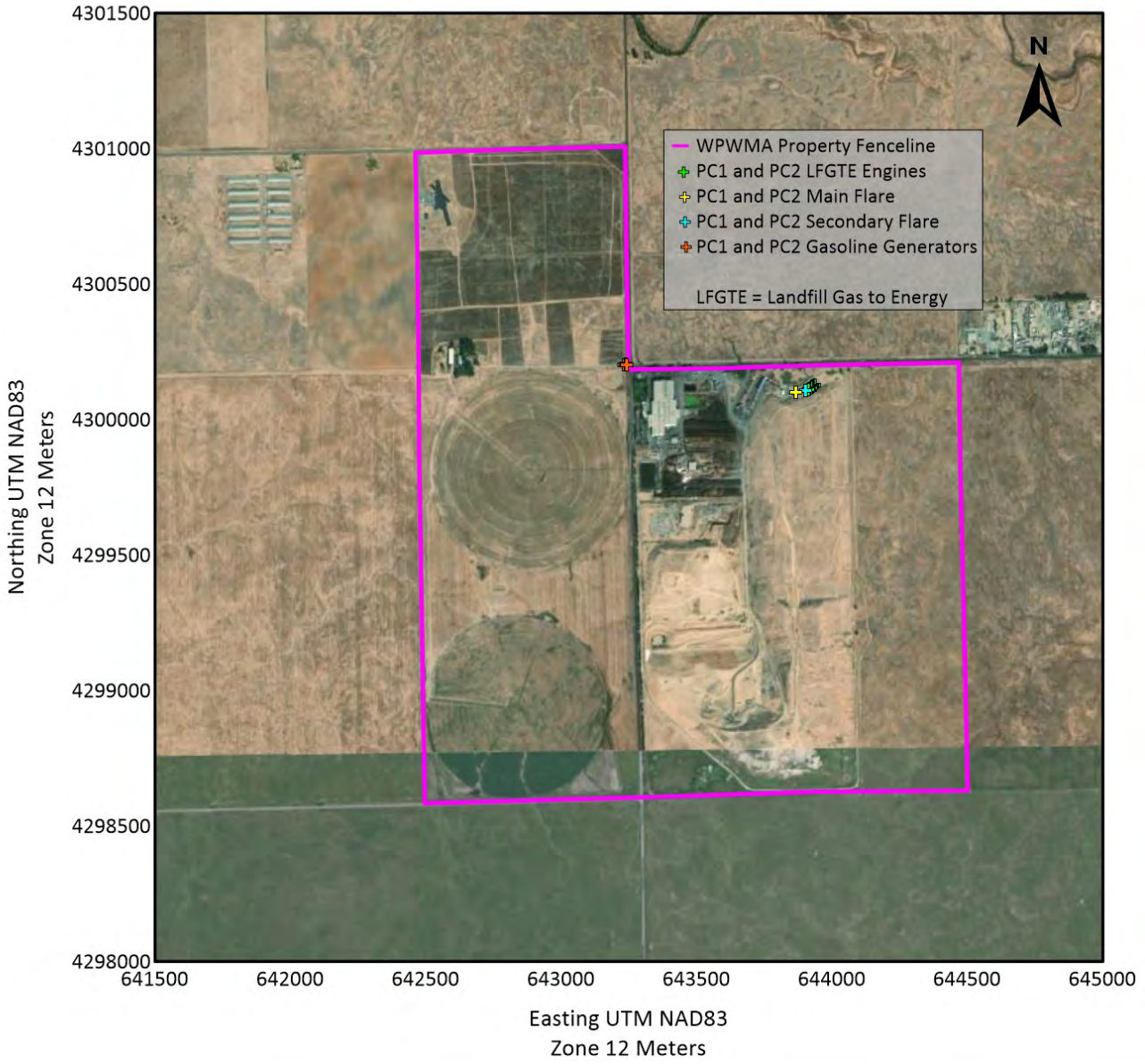

Figure B-7. Stationary Combustion Source Layout

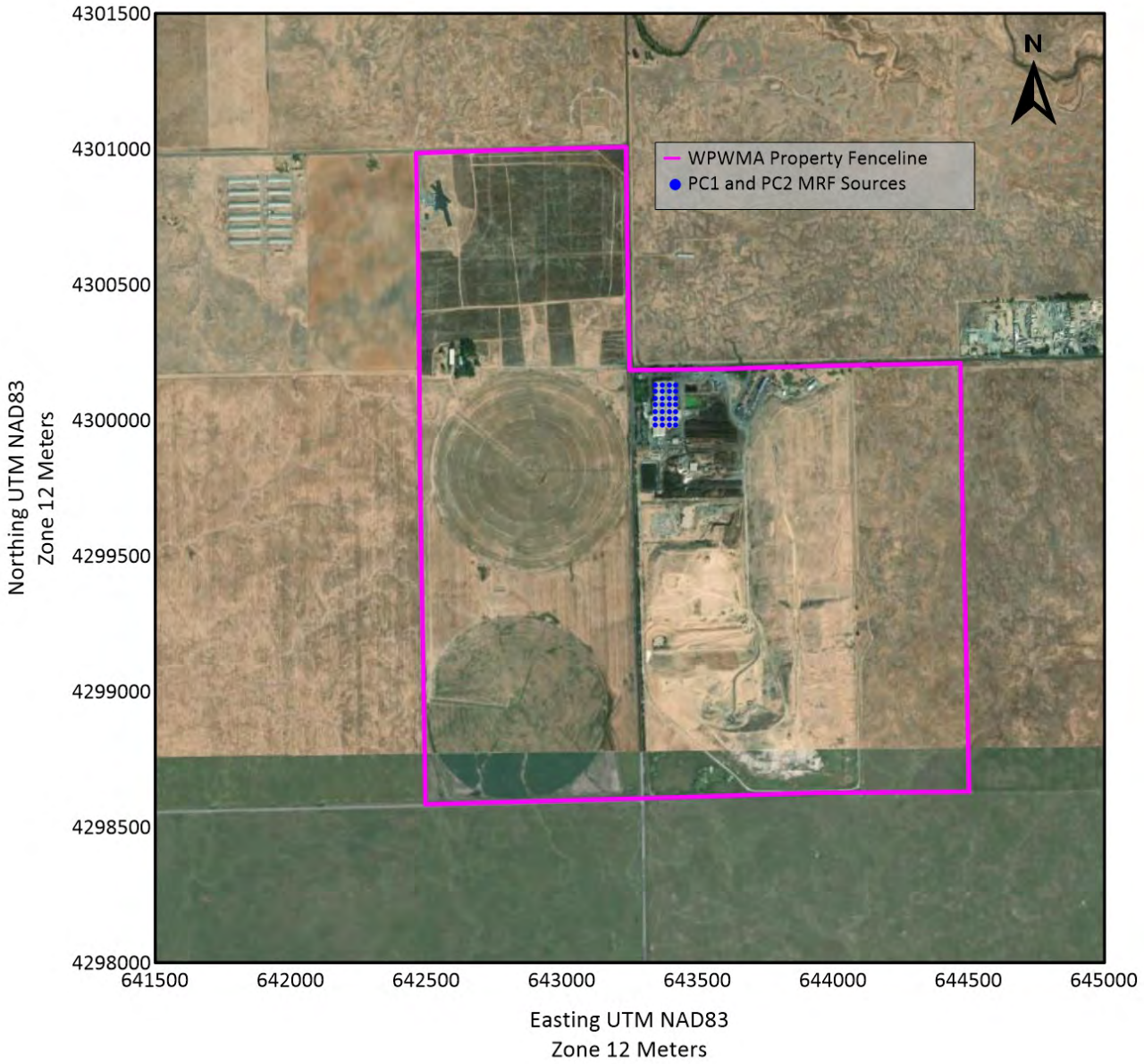

Figure B-8. MRF Source Layout

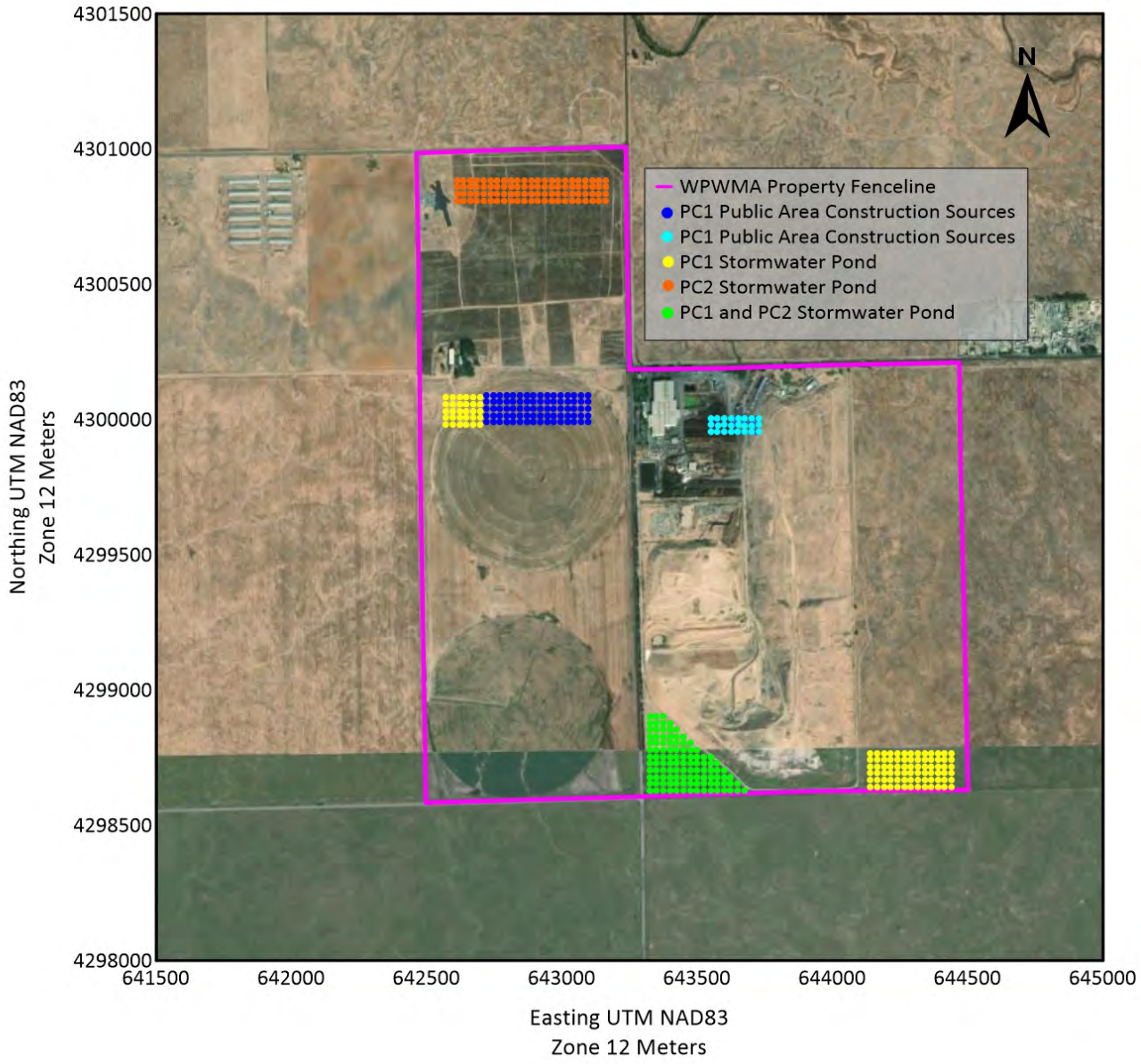

Figure B-9. Additional Facility Construction Source Layout

Appendix C
Health Risk Contour Plots

Appendix C. Health Risk Contour Plots

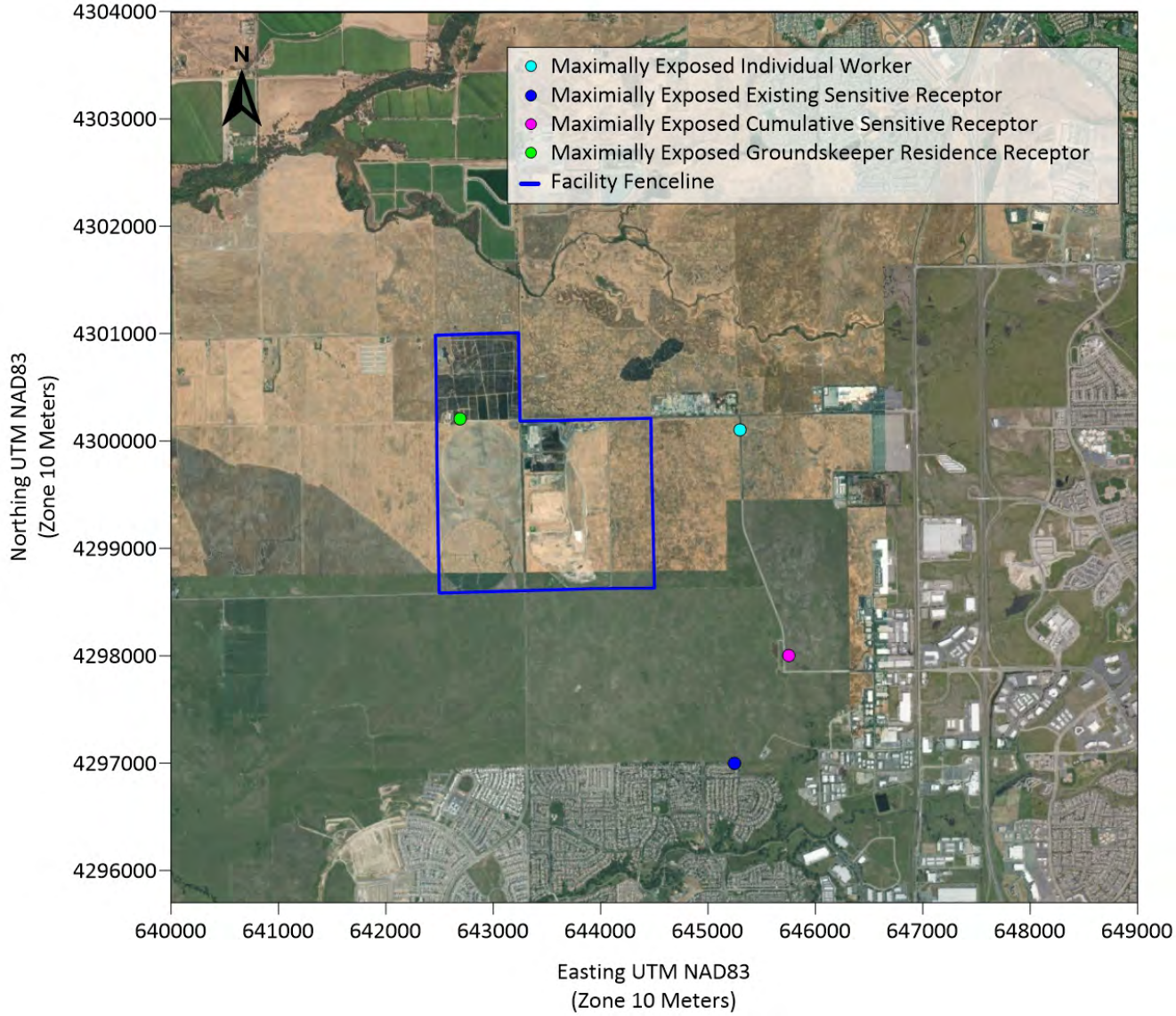

Figure C-1. Plan Concept 1 Cancer Risk Points of Impact

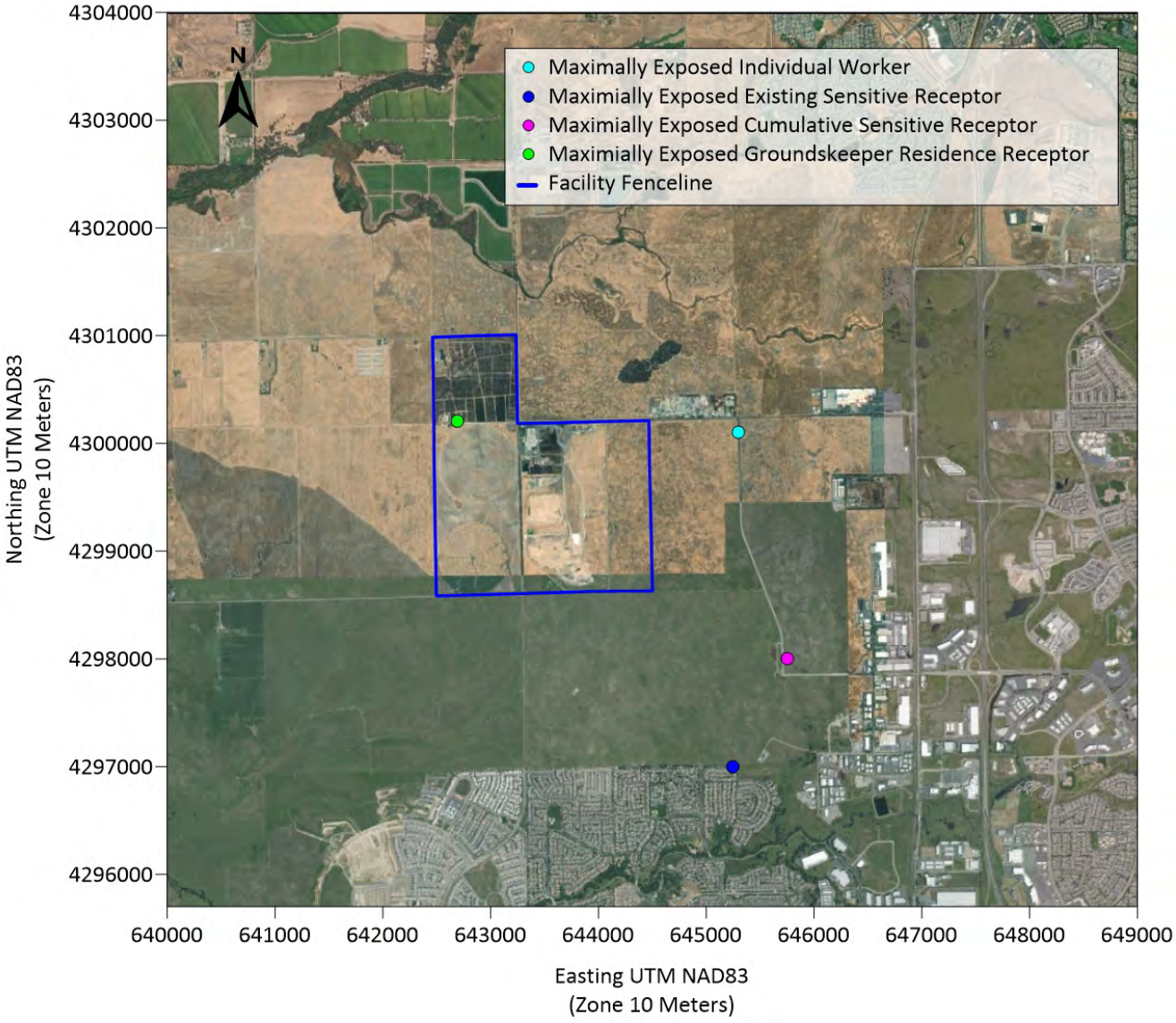

Figure C-2. Plan Concept 2 Cancer Risk Points of Impact

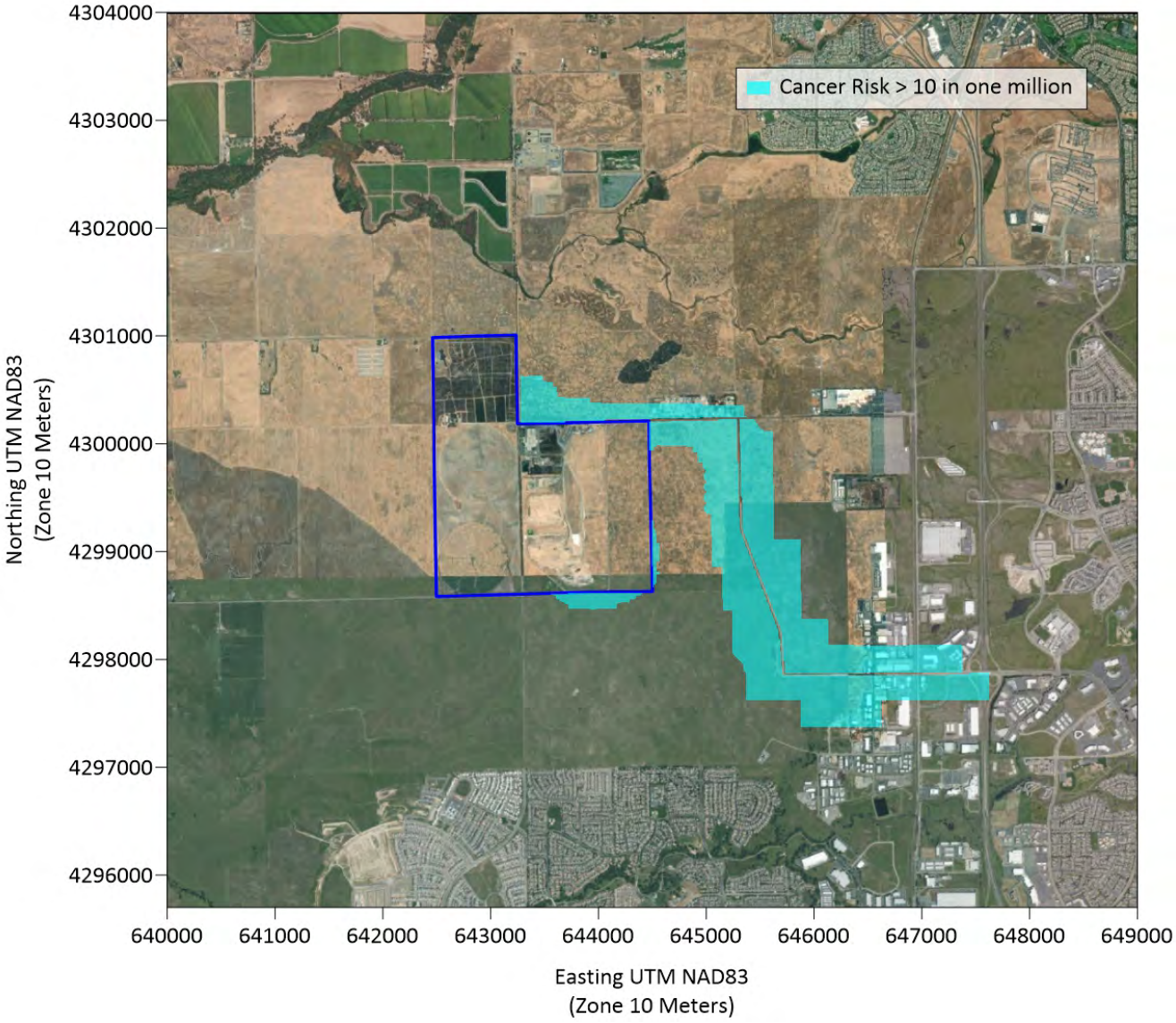

Figure C-3. Plan Concept 1 Cancer Risk 10 in One Million Contour

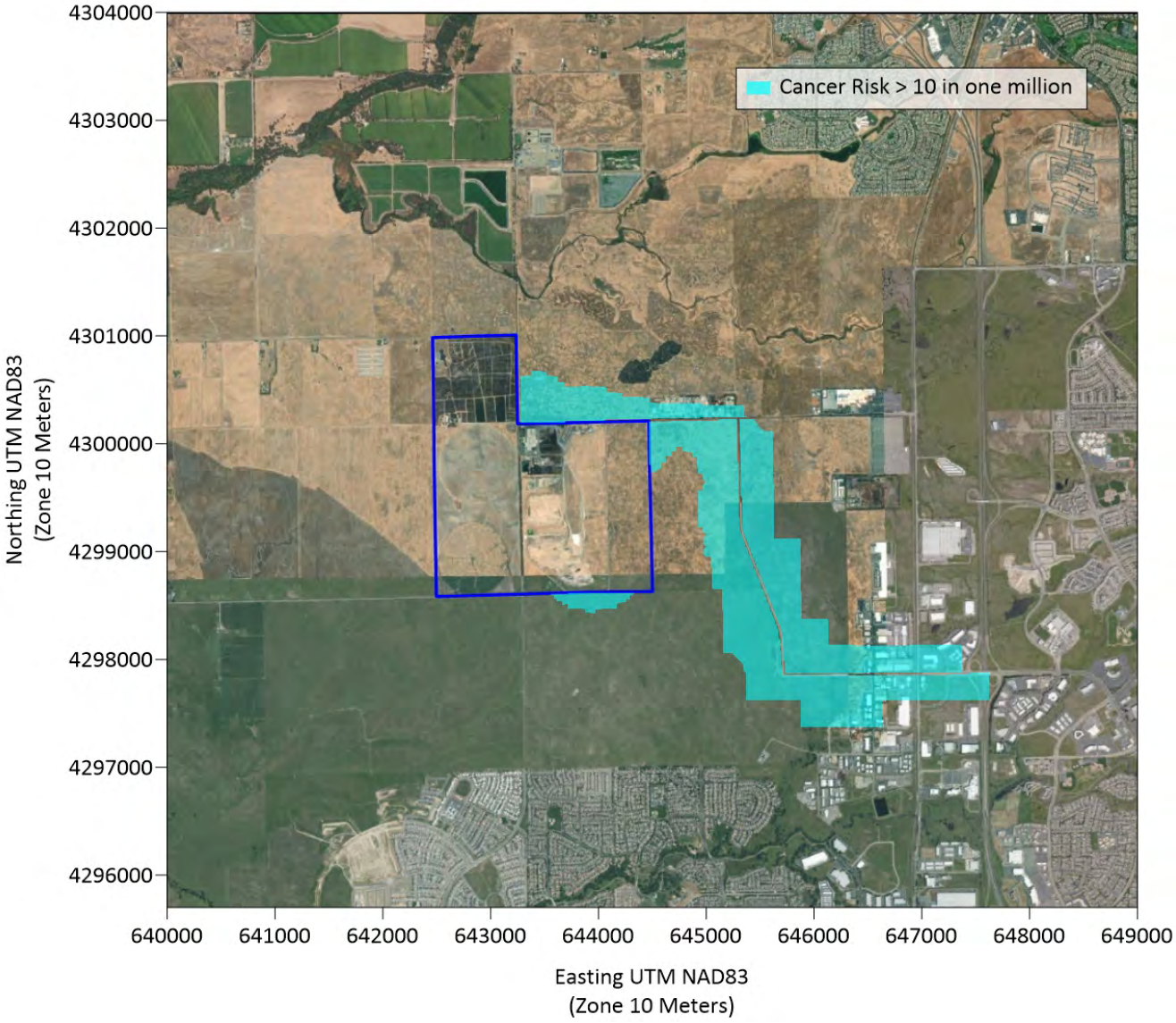

Figure C-4. Plan Concept 2 Cancer Risk 10 in One Million Contour

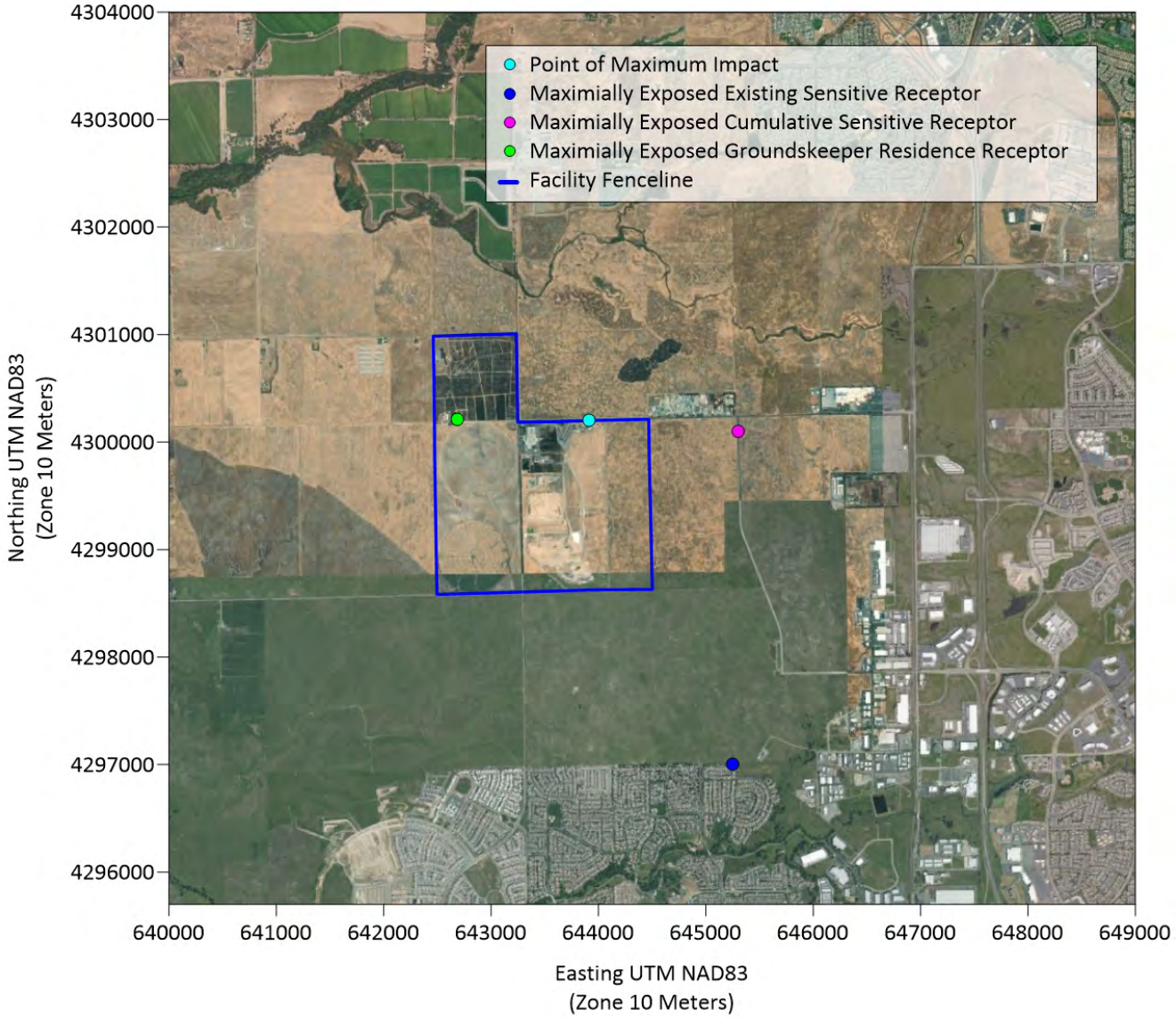

Figure C-5. Plan Concept 1 Noncancer Chronic Risk Points of Impact

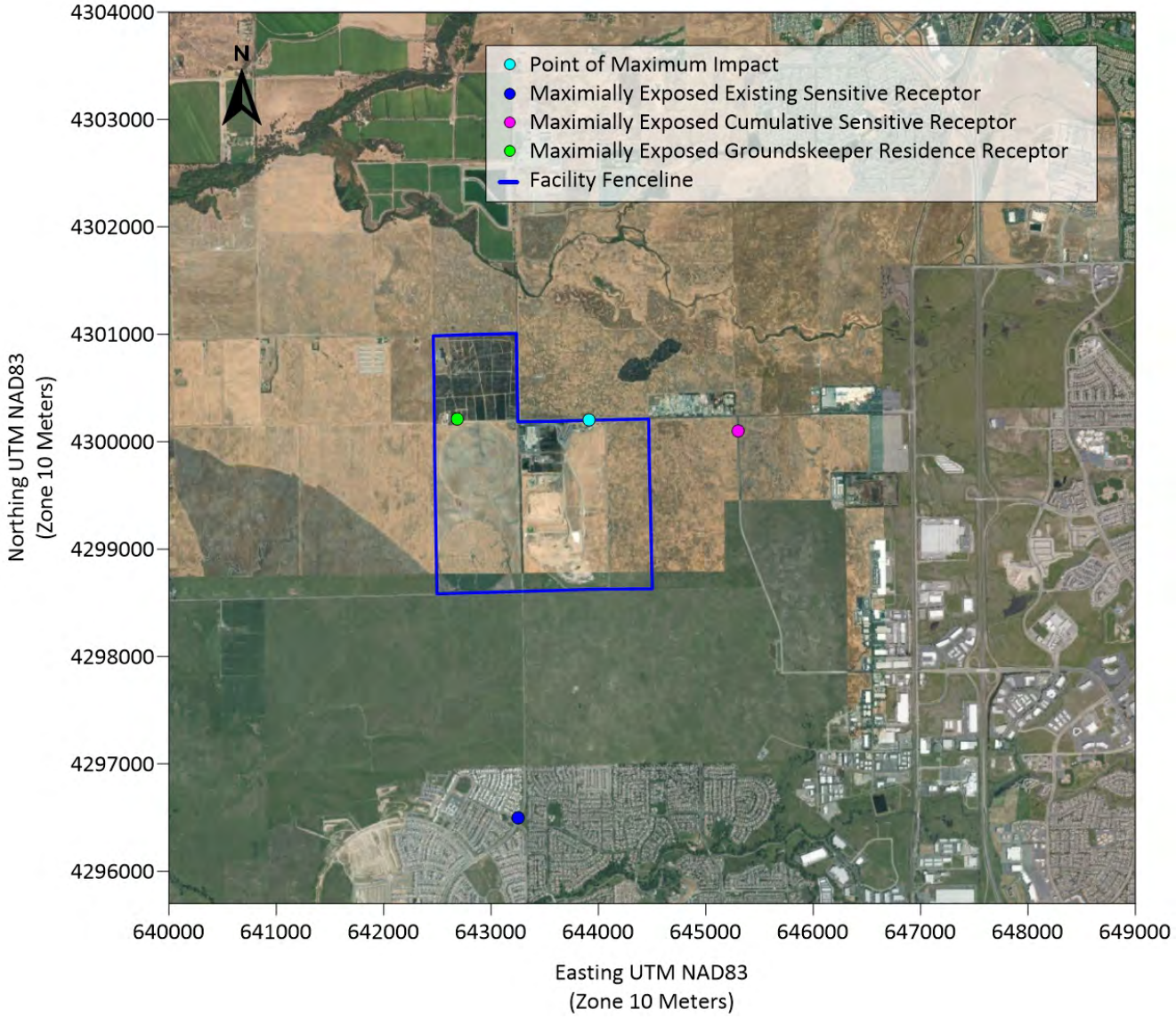

Figure C-6. Plan Concept 2 Noncancer Chronic Risk Points of Impact

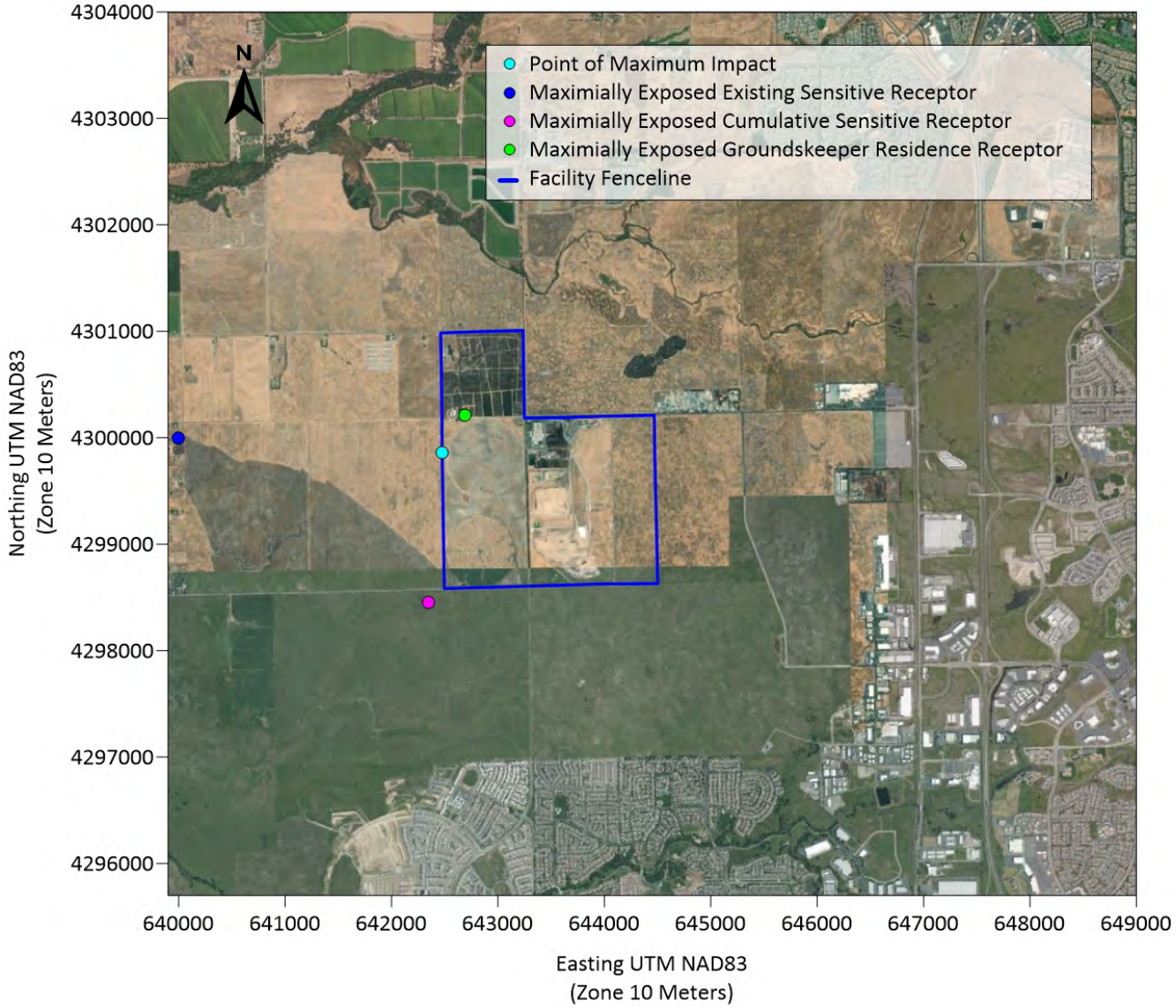

Figure C-7. Plan Concept 1 Noncancer Acute Risk Points of Impact

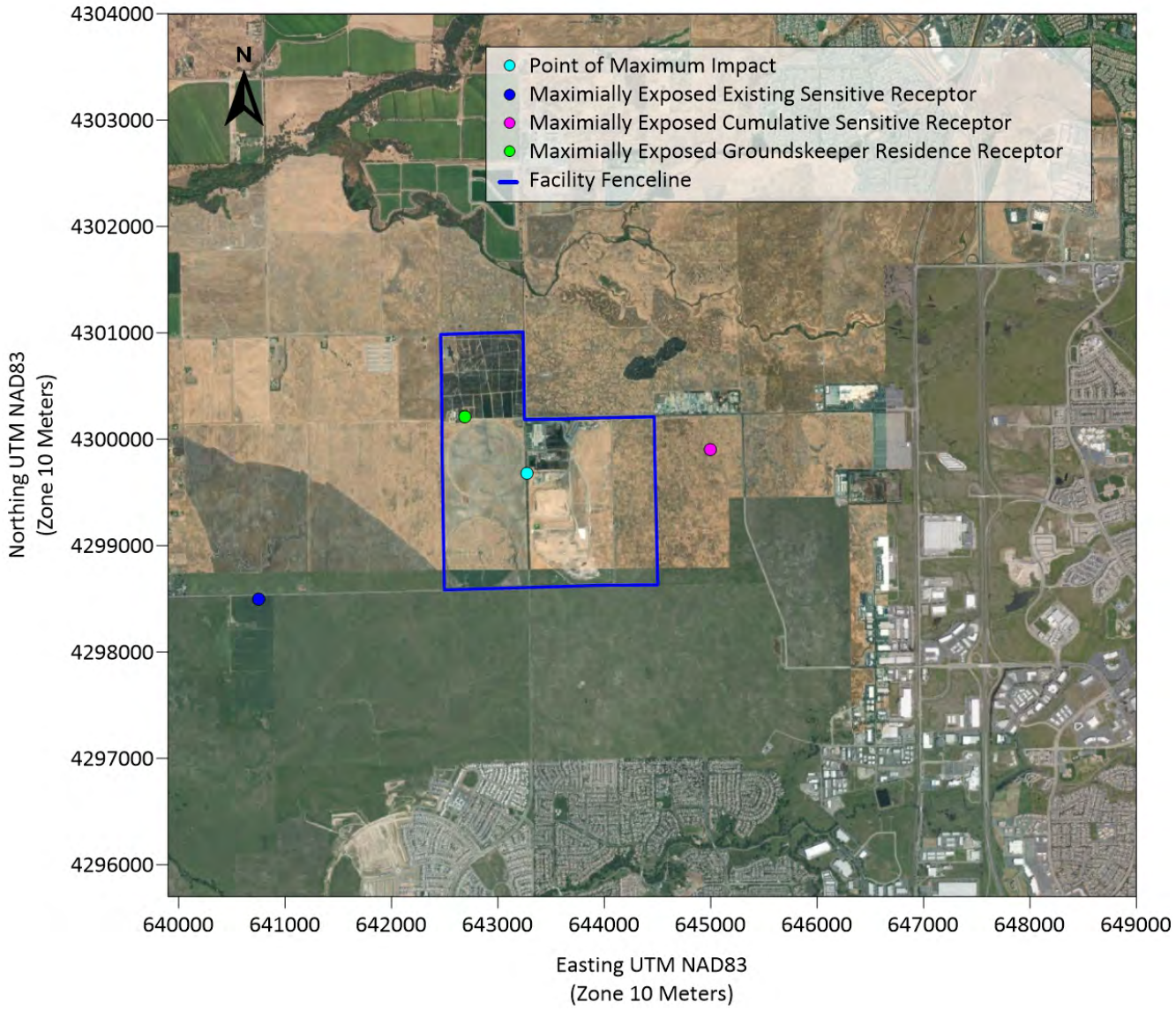

Figure C-8. Plan Concept 2 Noncancer Acute Risk Points of Impact

Appendix D
Groundskeeper Risk Results

Appendix D. Groundskeeper Risk Results

As described in the risk analysis, the onsite groundskeeper residence location is slated to be removed prior to the completion of Plan Concept 1 and Plan Concept 2. Results were calculated assuming the full 30--year exposure duration for carcinogenic impacts. However, since the groundskeeper location would not have the same 30-year exposure duration, actual risk would be less than the predicted risks presented in the following table. These results are included for informational purposes only and should not be used as a basis for determining significance for the proposed project.

Alternative	Residential Cancer Risk (per one million)	Chronic Health Risk (HI)	Acute Health Risk (HI)
Plan Concept 1	10.6	0.031	0.26
Plan Concept 2	6.5	0.007	0.24

HI = health index, dimensionless

Appendix C.6
Site Wide Odor Plan for the Western Placer Waste Management Authority's Solid Waste Processing and Disposal Facility

SITE WIDE ODOR PLAN

FOR THE

WESTERN PLACER WASTE MANAGEMENT AUTHORITY'S SOLID WASTE PROCESSING AND DISPOSAL FACILITY

Prepared by:
Western Placer Waste Management Authority

October 2020

Version 1.2

Western Placer Waste Management Authority
Site Wide Odor Plan

Table of Contents

1. Acronyms and Defined Terms 1
   A. Acronyms 1
   B. Defined Terms 1
2. Scope and Intent of the Site Wide Odor Plan 3
3. Overview of the WPWMA 4
4. WPWMA Facility Purpose 6
5. WPWMA Funding Sources 6
6. Agency/Stakeholder Roles & Responsibilities 7
   A. Western Placer Waste Management Authority 7
   B. MRF Operator 7
   C. Landfill Operator 8
   D. Waste Generators and Haulers 8
   E. Energy Developer 9
   F. WPWMA Consultants 9
   G. Placer County Air Pollution Control District 9
   H. Placer County Local Enforcement Agency 9
   I. Public 9
7. Regional Odor Sources 10
   A. WPWMA Odor Sources 10
   B. Non-WPWMA Odor Sources 10
8. On-site Odor Sources, Operational Planning and BMPs 13
   A. Overview of On-Site Odor Sources 14
   B. MRF 14
   C. Composting Facility 17
   D. Landfill 22
   E. Landfill Gas 25
   F. Planning and Scheduling Operational Activities 27
9. Weather & Topography 27
10. Odor Monitoring and Investigations 29
   A. Odor Monitoring and Dispersion Modeling System 29
   B. Predicative Odor Risk Modeling 30
   C. Routine On- and Off-site Odor Monitoring by WPWMA Staff 31
   D. Odor Notification System 33
   E. Odor Notification Investigation Protocol 33
   F. Odor Notification Investigation Report Procedures 37

Western Placer Waste Management Authority
Site Wide Odor Plan

Table of Contents
(continued)

G. Operational Review, Analysis and Adjustment 37
11. Public Education & Outreach 38
A. Annual Meetings 38
B. Website 39
C. National Night Out Event 39
12. Review of Odor Control Technologies 40
13. Reporting and Recordkeeping 40
14. WPWMA Board Approval Process and Availability of Funding 40

REFERENCES
FIGURE 3-1 SITE LOCATION
FIGURE 7-1 POTENTIAL REGIONAL ODOR SOURCES
FIGURE 8-1 OVERALL CONTRIBUTION TO SITE ODOR BY PROCESS
FIGURE 8-2 WPWMA FACILITY SITE LAYOUT
FIGURE 8-3 COMPOST EMISSION CURVE
FIGURE 10-1 HIGH ODOR RISK WIND DIRECTION ZONE
FIGURE 10-2 ROUTINE OFF-SITE MONITORING LOCATIONS
FIGURE 10-3 ODOR NOTIFICATION INVESTIGATION ZONE
APPENDIX A: BMP CHECKLIST
APPENDIX B: 2015 ODOR STUDY
APPENDIX C: COMPOST ODOR IMPACT MINIMIZATION PLAN
APPENDIX D: ODOR RISK FORECASTING TOOL
APPENDIX E: ODOR INVESTIGATION SUMMARY REPORT TEMPLATE
APPENDIX F: LFG AND LEACHATE MANAGEMENT SOP

1. ACRONYMS AND DEFINED TERMS

The following is a listing of select acronyms and defined terms used throughout this document.

A. Acronyms

ADC	Alternative Daily Cover
ASP	Aerated Static Pile
BMP	Best Management Practice
C&D	Construction and Demolition
GCCS	Landfill Gas Collection and Control System
HHW	Household Hazardous Waste
LCRS	Leachate Collection and Removal System
LEA	Local Enforcement Agency
LFG	Landfill Gas
MRF	Materials Recovery Facility
MSW	Municipal Solid Waste
NOX	Oxides of Nitrogen
OIMP	Odor Impact Minimization Plan
PCAPCD	Placer County Air Pollution Control District
ROG	Reactive Organic Gasses
SVAB	Sacramento Valley Air Basin
SWOP	Site Wide Odor Plan
VOC	Volatile Organic Compound
WPWMA	Western Placer Waste Management Authority
WRSL	Western Regional Sanitary Landfill
WWTP	Wastewater Treatment Plant

B. Defined Terms

Gate Hours	The hours the WPWMA's facility is open for the receipt of wastes. Currently 7 am to 5 pm on weekdays and 8 am to 5 pm on weekends
Member Agencies	The cities of Lincoln, Rocklin, Roseville and the County of Placer
Observed Holidays	Observed Holidays include: January 1st, Martin

	Luther King Jr. Day, Lincoln's Birthday, Presidents' Day, Memorial Day, July 4th, Labor Day, Columbus Day, Veterans Day, Thanksgiving and the day after Thanksgiving, and Christmas Day. Where any of these noted holidays falls on a Saturday, the preceding Friday will be considered the "Observed Holiday". Where any of these noted holidays fall on a Sunday, the following Monday will be considered the "Observed Holiday".
Participating Agencies	Includes the Member Agencies and the cities of Auburn, Colfax and the Town of Loomis
Residue or Residual Waste	Non-recovered materials which are landfilled following processing at the MRF to recover recyclable commodities.

2. SCOPE AND INTENT OF THE SITE WIDE ODOR PLAN

The Site Wide Odor Plan (SWOP) provides an overview of the Western Placer Waste Management Authority (WPWMA), its facilities and services, and potential operational odor sources and associated mitigation measures implemented, contemplated and evaluated via pilot-scale testing at the facility.

Acknowledging that odors are a natural and unavoidable byproduct of the decomposition of organic materials, the WPWMA established the SWOP to provide clear, concise information about individual facility odor sources, operational and meteorological conditions that have the potential to exacerbate the perception of odors, and the measures the WPWMA takes to reduce the potential for facility odors to be perceived by nearby receptors.

The SWOP is intended to be used as a tool by the WPWMA and its facility operators, contractors, and consultants to consistently and proactively take the appropriate steps to reduce the potential for off-site odors while continuing to ensure that WPWMA and its facility operators, contractors, and consultants meet all applicable regulatory and contractual obligations for safely and efficiently managing the solid wastes received, processed or landfilled. Compliance with current and future regulations, particularly those regulations that address enhanced management of organic wastes, have the potential to exacerbate odors from the WPWMA's facility.

The SWOP establishes best management practices (BMPs) utilized by the WPWMA to mitigate the release of odors from WPWMA facilities -- including the material recovery facility, landfill, landfill gas collection and control system (GCCS), and composting operations. The SWOP includes measures to prevent, monitor, and address odors. The BMPs contained in the SWOP are intended to: (1) be fully protective to the health, safety and well-being of the WPWMA employees, its facility operators, contractors, consultants, and facility users; and (2) ensure that WPWMA acts as a good neighbor by reducing its odor-emitting potential. The BMPs identified in this SWOP reflect current operating and regulatory conditions. Changes to operations that result from changes in regulations or programs operated by the Participating Agencies may necessitate the revision of this document.

The SWOP is intended to be considered by the Placer County Air Pollution Control District (PCAPCD) (and any other applicable regulatory bodies that oversees the WPWMA's operation) when evaluating community complaints and non-compliance issues relating to odor. Compliance with the SWOP is an indicator that the WPWMA has implemented measures to mitigate odor impacts consistent with best practices and installed equipment. When determining whether or not to issue a Notice of Violation for nuisance and determining the appropriate settlement terms when a violation is issued, including a potential deterrent monetary penalty, PCAPCD will fully consider WPWMA's adherence to, and degree of compliance with, the procedures identified in the SWOP.

Finally, the SWOP provides insight to current and future nearby receptors of odors from the WPWMA's facility and reasons facility odors may be periodically

noticeable. The SWOP provides details on how the neighboring community can report odor complaints to the WPWMA and PCAPCD, how the WPWMA investigates and responds to the odor notifications/complaints, how the WPWMA cooperates on odor complaints received by the PCAPCD, and the measures implemented by the WPWMA to adjust its operations (where practical) to reduce the potential for odors.

3. OVERVIEW OF THE WPWMA

The WPWMA was created pursuant to a Joint Exercise of Powers Agreement originally dated October 3, 1978, by the County of Placer, City of Roseville, City of Rocklin, and City of Lincoln. These four entities are collectively referred to as the "Member Agencies". The City of Auburn, City of Colfax, and Town of Loomis utilize the WPWMA's facilities; these entities and the Member Agencies are collectively referred to as the "Participating Agencies". The WPWMA is governed by a Board of Directors made up of elected officials from each of the Member Agencies.

The WPWMA was established for the purpose of acquiring, owning, operating, and maintaining a sanitary landfill site and all related improvements. In 1978, after evaluating an area between 350 and 400 square miles in western Placer County for suitable locations to site a sanitary landfill, the present location of the Western Regional Sanitary Landfill (WRSL) was selected. Considerations when selecting the WRSL site included technical aspects such as geology and soil conditions as well as compatibility with surrounding land uses and aesthetic factors such as odors.[1]

The WRSL is located on approximately 320 acres in the Sunset Area (formerly known as the Sunset Industrial Area) in unincorporated Placer County north of the City of Roseville, south of the City of Lincoln and west of the City of Rocklin. The permitted area of the WRSL is approximately 291 acres, with approximately 231 acres for disposal activities. The WRSL began disposal operations in 1978 and is currently operated under a contract with a private Landfill Operator. The WPWMA also owns approximately 465 acres west and 158 acres immediately east of the active WRSL to support future expansion of its operations as necessary. As of 2019, the western and eastern properties are not permitted for solid waste-related uses; however, the WPWMA initiated environmental review in January 2019 to utilize the western and eastern properties for solid waste-related operations in the future. The WPWMA's properties are shown in Figure 3-1.

In response to California Assembly Bill 939, the WPWMA constructed the Materials Recovery Facility (MRF) to assist the Participating Agencies in complying with the regulation's waste diversion mandates. The MRF began operations in 1995 and has been operated continuously under a contract with a private MRF Operator. Non-recovered wastes ("Residue" or "Residual Waste") generated at the MRF are transported by the MRF Operator to the WRSL for final disposal. Current MRF operations include: 1) mixed waste receiving and processing areas for recovery of recyclable and marketable materials, 2) an organics composting area where greenwaste, foodwaste, and paper waste are

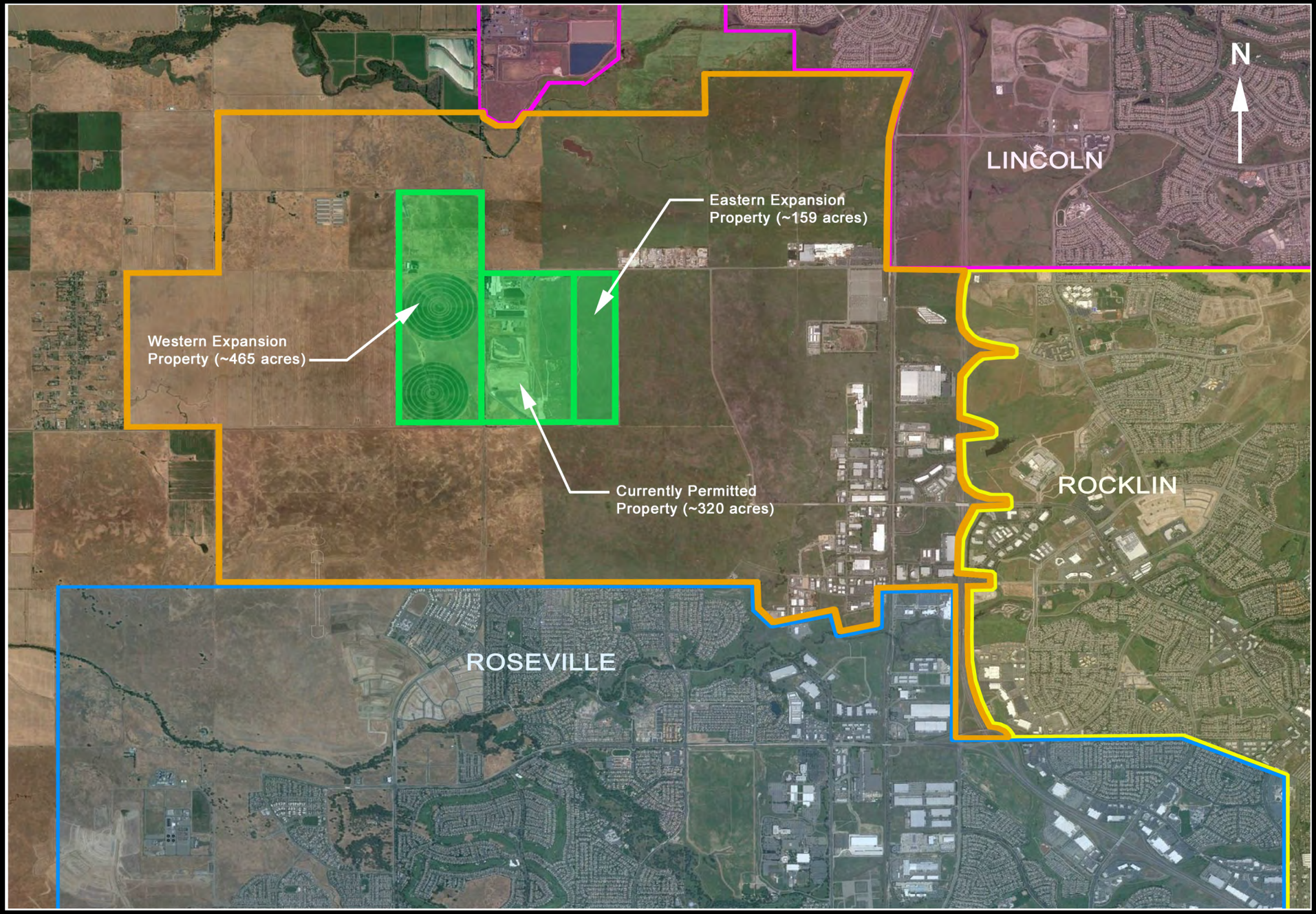

CELEBRATING OVER 40 YEARS OF SERVICE
WPWMA
EST. 1978

WPWMA Site-Wide Odor Plan
Site Location

FIGURE
3-1

composted[1], 3) a woodwaste processing area where wood materials are processed to produce biofuels and landscaping products, 4) two household hazardous waste (HHW) facilities where HHW and universal wastes received from the public or recovered from the MRF are consolidated prior to shipment offsite for recycling or disposal, and 5) a commercial and residential recyclable buyback and drop-off center (Buyback) where clean, source-separated recyclable materials are received and blended with recyclable materials recovered from the MRF for shipment to recyclable commodity end users.

Placer County provides staffing to the WPWMA, including financial management scalehouse operations, general and engineering oversight of all facility operations, and implementation of public education and outreach programs. WPWMA staff also provide recommendations regarding solid waste policies and operations to the WPWMA Board of Directors.

The WPWMA has established long-term contracts with private entities for the operation and maintenance of the MRF and WRSL. The WPWMA also retains the services of professional engineering and other firms related to the ongoing facility operation, including solid waste systems design, water quality, GCCS design and operation, and odor monitoring and air dispersion modeling.

4. WPWMA FACILITY PURPOSE

The WPWMA's facilities receive and process solid wastes from within Placer County for the purposes of: 1) recovering marketable, recyclable materials that can be reintroduced into the local, national or global economy, 2) composting select organic materials to produce a marketable soil amendment, 3) safely recovering household hazardous wastes, universal wastes, and electronic wastes for off-site recycling or destruction, and 4) disposing of non-marketable solid wastes within a sanitary landfill in accordance with applicable regulatory and legal requirements.

5. WPWMA FUNDING SOURCES

The WPWMA's primary funding source is tipping fees charged to customers to drop off their wastes at the WPWMA's facility. Additional sources of funding include, but are not necessarily limited to: royalty payments from the Energy Developer, rent payments associated with real property leases, grant monies received from the state (typically related to oil recycling) and interest earned on the WPWMA's reserve balances.

The WPWMA does not receive revenue from direct parcel assessments, the General Funds of any of its Participating Agencies, or from local, state or federal taxes.

[1] The WPWMA is fully permitted by CalRecycle to compost greenwaste. Approval of a pilot project to co-compost foodwaste and/or soiled paper with greenwaste was granted by the LEA (acting on behalf of CalRecycle) on September 13, 2016.

The WPWMA Board periodically reviews and adjusts its tipping fee structure to ensure sufficient funding is available for current and future operational needs.

6. AGENCY/STAKEHOLDER ROLES & RESPONSIBILITIES

Several primary stakeholders share an interest in regional odors, including those generated and emitted from the WPWMA's facility, and have roles and responsibilities related to the management, control and reporting of these odors.

A. Western Placer Waste Management Authority

The WPWMA is the owner and legal operator of the MRF, WRSL, composting, HHW and Buyback facilities. The WPWMA holds all operating permits for the facility and is directly responsible for complying with the permits and working with the appropriate regulatory agencies on permit-related matters.

The WPWMA Board of Directors has the ability and responsibility to establish policy related to use of the facility by generators and transporters of waste materials, how the facility is operated and maintained by contracted entities, and what, if any, specific policy provisions exist related to control of odors from the WPWMA's facility.

The WPWMA contracts with multiple third-party entities to operate and maintain specific elements of the WPWMA's facilities. As such, the WPWMA has the ability to integrate odor monitoring, mitigation and reporting requirements into these various contracts as it deems appropriate and in the best interest of the WPWMA and its customers.

B. MRF Operator

The MRF, composting, HHW and Buyback facilities (collectively referred to as the MRF) are operated under a single contract with a private firm.

The MRF Operator is directly responsible, as outlined in their contract with the WPWMA, for the operation and maintenance of these facilities. As such, once waste is received at the facility, the MRF Operator controls the flow and management of these materials, including when recyclable commodities are shipped off-site to end-users and when Residual Wastes are transported to the WRSL for final disposal.

The MRF Operator is contractually obligated to inspect waste loads directed by WPWMA staff to the MRF to determine if the materials are suitable for processing. If the MRF Operator judges a load to have too little recyclable or marketable value or that it contains materials that may damage MRF processing equipment, the MRF Operator may elect to redirect the materials to the WRSL for disposal. This provides the MRF Operator the ability to also judge whether a particular load has an excessive level of odor and whether or not it would be best (from a facility odor perspective) to process the materials at the MRF, direct them to the Composting Facility, or divert them to the WRSL for immediate disposal.

The MRF Operator has some ability to adjust MRF operations to reduce the potential for heightened perception of off-site odors. Specifically, depending on other operational factors, the MRF Operator can adjust how and when certain materials are processed based on the time of day and day of the week, actual and predicted weather conditions, and potential for odors from the materials processed.

The MRF Operator is also responsible for maintaining the MRF, including regular and periodic cleaning and other "housekeeping" efforts.

The MRF Operator does not have direct control over the method in which materials are generated and hauled to the MRF for disposal. As such, odors associated with waste materials during transport to the MRF are outside of the MRF Operator's control.

C. Landfill Operator

The WRSL is operated under a separate contract than the MRF.

The Landfill Operator is directly responsible, as outlined in their contract with the WPWMA, for operation and maintenance of the WRSL as it relates to the receipt, burial, and covering of the waste. The Landfill Operator is not responsible for the design, installation, operation or maintenance of the GCCS.

The Landfill Operator has some ability to adjust operations to reduce the potential for heightened perception of off-site odors. Specifically, depending on other operational factors, the Landfill Operator can adjust where and how to fill sections, within the WPWMA-approved site fill sequence plan, of the WRSL and how wastes are blended with other wastes and covered during the burial process to reduce the potential for odors.

The Landfill Operator does not have direct control over the method in which materials are generated and hauled to the WRSL for disposal. As such, odors associated with waste materials during transport to the WRSL are outside of the Landfill Operator's control.

D. Waste Generators and Haulers

Neither the WPWMA nor its contractors and consultants are responsible for the transport and delivery of waste materials to the WPWMA's facility. Some materials delivered to the WPWMA's facility have a high potential for noticeable odors because of the type of material (e.g. wastewater treatment plant sludge and foodwaste, etc.) or the conditions in which the material was collected and stored prior to transport (e.g. residential greenwaste that begins to decompose and generate odors prior to collection by the hauler, etc.).

The responsibility for the individual generators and haulers to mitigate odors is outside the purview of the SWOP. However, the WPWMA and its

contractors and consultants endeavor to manage these types of materials in a manner aimed at reducing their noticeable off-site odor potential.

E. Energy Developer

The WPWMA currently leases land to a private energy developer who owns and operates a landfill gas-to-energy facility located at the northern edge of the WRSL. The Energy Developer receives LFG provided by the WPWMA for the purposes of generating and selling electricity produced by running internal combustion engines fueled by LFG.

The majority of LFG generated at the WRSL is conveyed by the WPWMA to the Energy Developer, thus the Energy Developer's facility serves as the primary control element for the destruction of LFG.

F. WPWMA Consultants

The WPWMA currently contracts with an engineering firm to operate, manage and maintain the WPWMA's GCCS. Their primary role is to operate the GCCS to maintain regulatory compliance and minimize emissions of landfill gas to the atmosphere which also serves to reduce LFG-related odors.

G. Placer County Air Pollution Control District

The PCAPCD is responsible for the regulation and enforcement of air quality regulations within Placer County consistent with federal, state and local statutes.

The PCAPCD provides regulatory oversight and asserts enforcement of the WPWMA's air-related operating permits.

H. Placer County Local Enforcement Agency

The LEA has been delegated authority by CalRecycle to enforce state law as it relates to the operation and closure of solid waste landfills, MRFs and composting facilities.

The LEA provides regulatory oversight and enforcement of the WPWMA's non-air and non-water-related operating permits.

I. Public

The public, particularly those who live and work proximate to the WPWMA's facility, can serve as real-time field monitors for the presence of odors. The WPWMA's website (www.WPWMA.ca.gov) provides an easy and convenient method for the public to provide feedback regarding when and where they experience odors, how long the odors are noticeable, and a description of the odor.

Information provided by the public provides useful data to the WPWMA that can serve to augment data collected from its odor monitoring and air dispersion system for evaluating the migration of odor from the site. To be

of greatest use, it is important that odors are reported to the WPWMA as timely and accurately as possible, as described in Section 10.D.

7. Regional Odor Sources

The WPWMA is one of several known odor sources located in or adjacent to Placer County's Sunset Area. The following provides an overview of potential odor sources at or proximate to the WPWMA's facility; Figure 7-1 shows the location of these potential odor sources.

A. WPWMA Odor Sources

In its 2007 and 2009 studies conducted for the WPWMA, SCS Engineers identified the following primary sources of odor at the WPWMA's facility: 1) MRF, 2) composting facility, 3) landfill active face, and 4) landfill gas. These odor sources are discussed in greater detail in Section 8 of this report.

B. Non-WPWMA Odor Sources

i. Non-Ag (not exempt from PCAPCD nuisance regulations)

a. Rio Bravo

The Rio Bravo biomass facility is located approximately 1.5 miles east of the WPWMA's facility and directly south of the Thunder Valley Casino Resort.

The Rio Bravo facility receives and processes woody materials for the purposes of generating electricity. As part of its operation, Rio Bravo maintains stockpiles of ground wood fuel. In some cases, these stockpiles of wood fuel can begin to decompose and generate odors similar to the WPWMA's composting operations.

b. Mallard Creek

The Mallard Creek facility is located approximately 2.2 miles southeast of the WPWMA's facility. Mallard Creek produces and markets equine and poultry bedding materials, landscaping products, pelletized fuel products and industrial fibers. These products are produced predominately from woody material received and processed at Mallard Creek's facility. Much like the Rio Bravo facility, ground and stockpiled materials have the potential to generate odors similar to that of the WPWMA's composting operations.

c. Green Solutions and More

The Green Solutions and More facility is located approximately ¾ mile east of the WPWMA's facility and sits adjacent to the Inviro-Tec Facility. Green Solutions and More accepts greenwaste and woodwaste which is ground

WPWMA Site-Wide Odor Plan
Potential Regional Odor Souces

FIGURE
7-1

on-site to produce mulch, wood chips and compost. The facility also accepts soil and concrete for recycling. The green and wood materials have the potential to generate odors similar to that of the WPWMA's composting operations

d. Kamps Propane – Rocklin

Kamps Propane is a propane distributor located approximately 2.5 miles southeast of the WPWMA's facility and less than ½ mile due east of Blue Oaks neighborhood. The odorant added to propane can be similar to landfill gas or other landfill-related odors.

e. Inviro-Tec

The Inviro-Tec facility is located approximately ¾ mile east of the WPWMA's facility and site adjacent to the Green Solutions and More facility. Inviro-Tec owns and operates a facility that accepts and processes septic tank pumpings to separate the liquids from the solids. Liquids are pumped to the sanitary sewer while the solids are transported for disposal at the WRSL. Odors from Inviro-Tec's facility can be similar to that of a wastewater treatment plant or the landfill working face when sludges are received and managed.

f. Thunder Valley WWTP

The United Auburn Indian Community owns and operates a wastewater treatment plant at their Thunder Valley Casino. The 700,000 gallon per day facility located approximately 1.5 miles east of the WPWMA's facility serves the Thunder Valley Casino Resort exclusively. Sludge from the Thunder Valley WWTP is hauled by Recology to the WRSL or other sanitary landfill for disposal. Odors from the Thunder Valley WWTP can be similar to that of the landfill working face when sludges are received and managed.

g. City of Lincoln WWTP

The City of Lincoln owns and operates a regional wastewater treatment facility located approximately 1.5 miles north of the WPWMA's facility. The 5.9 million gallon per day facility serves areas between Lincoln and North Auburn. Sludge from Lincoln's WWTP is currently disposed at either the WRSL or the Ostrom Road Landfill in Yuba County. Odors from Lincoln's WWTP can be similar to that of the landfill working face when sludges are received and managed.

h. City of Roseville WWTP

The City of Roseville owns and operates two wastewater treatment facilities.

The Dry Creek facility is located approximately 6.5 miles south southeast of the WPWMA's facility. Materials generated at the Dry Creek facility are currently suitable for land application and are not delivered to the WPWMA's facility.

The Pleasant Grove facility is located approximately 3.5 miles southwest of the WPWMA's facility. Materials from the Pleasant Grove facility are hauled by the City of Roseville to the WRSL for disposal and have the potential for odor generation during transport. To reduce the odors associated with transport of the materials from the WWTP to the WPWMA's facility, the City of Roseville began using covered hauling containers in 2013. This practice substantially reduced the odors associated with sludge transport.

Odors from the Roseville WWTPs can be similar to that of the landfill working face when sludges are received and managed.

ii. Ag (exempt from PCAPCD nuisance regulations)

a. Poultry Farm

A privately-owned poultry farm consisting of twelve (12) enclosed barn structures is located approximately 1-mile northwest of the WPWMA's facility. Odors from the facility tend to have a musty odor mixed with ammonia and can be similar to composting and landfill related odors.

b. Dairy Farm

An approximately 20-acre, privately-owned dairy farm that includes eight (8) open-sided barns/structures and associated feed lots is located approximately 3 miles northwest of the WPWMA's facility. Odors from the facility tend to have a manure odor mixed with ammonia and can be similar to landfill and landfill gas-related odors.

8. ON-SITE ODOR SOURCES, OPERATIONAL PLANNING AND BMPS

The following provides an overview of the primary odor-generating operations at the WPWMA's facility (MRF, compost, landfill, and LFG) and the BMPs implemented by the WPWMA to reduce the potential for odors to be noticeable off-site including the advance planning and scheduling of operational activities. A checklist template is included in Appendix A that the WPWMA will utilize to document implementation and adherence to the observable BMPs. While this list

may not represent all the potential odor producing operations at the WPWMA's facility, based on previous site-specific studies conducted by the WPWMA, the following represents the operations with the greatest potential to produce odors.

A. Overview of On-Site Odor Sources

A November 2015 odor study commissioned by the WPWMA and produced by Environmental Management Consulting and Charles E. Schmidt, PhD (Appendix B) suggests the following relationship (see Figure 8-1) in terms of the relative odor potential of the primary facility odor sources.

Figure 8.1: Overall Contribution to Site Odor by Process

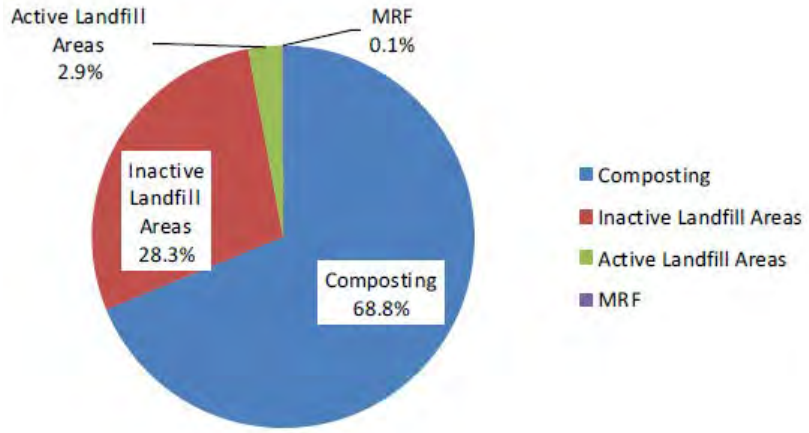

B. MRF

As used herein, the MRF represents the portion of the WPWMA's facility that receives and processes mixed municipal solid wastes for the purposes of recovering and marketing recyclable materials (Figure 8-2). Residual Wastes are transported to the WRSL for disposal.

Given the location of the MSW processing building relative to the WPWMA's overall facility, the potential for off-site odors associated with the MSW receiving and processing area is greatest along the sections of Athens Avenue and Fiddyment Road noted on Figure 8-2.

The materials processed at the MRF include organic materials and other putrescible wastes that have the potential to emit odors as they begin to decompose. Additionally, fines that are entrained within the mixed waste stream (including, but not limited to, dirt and grit, concrete and drywall dust, grass clippings, and small pieces of paper, wood, glass and plastic) are collected and used at the WRSL as an alternative daily cover (ADC) material. As a result, the following BMPs focus on timely and consistent processing of the materials and regular housekeeping and cleaning of facility to avoid the accumulation of potentially odiferous materials.

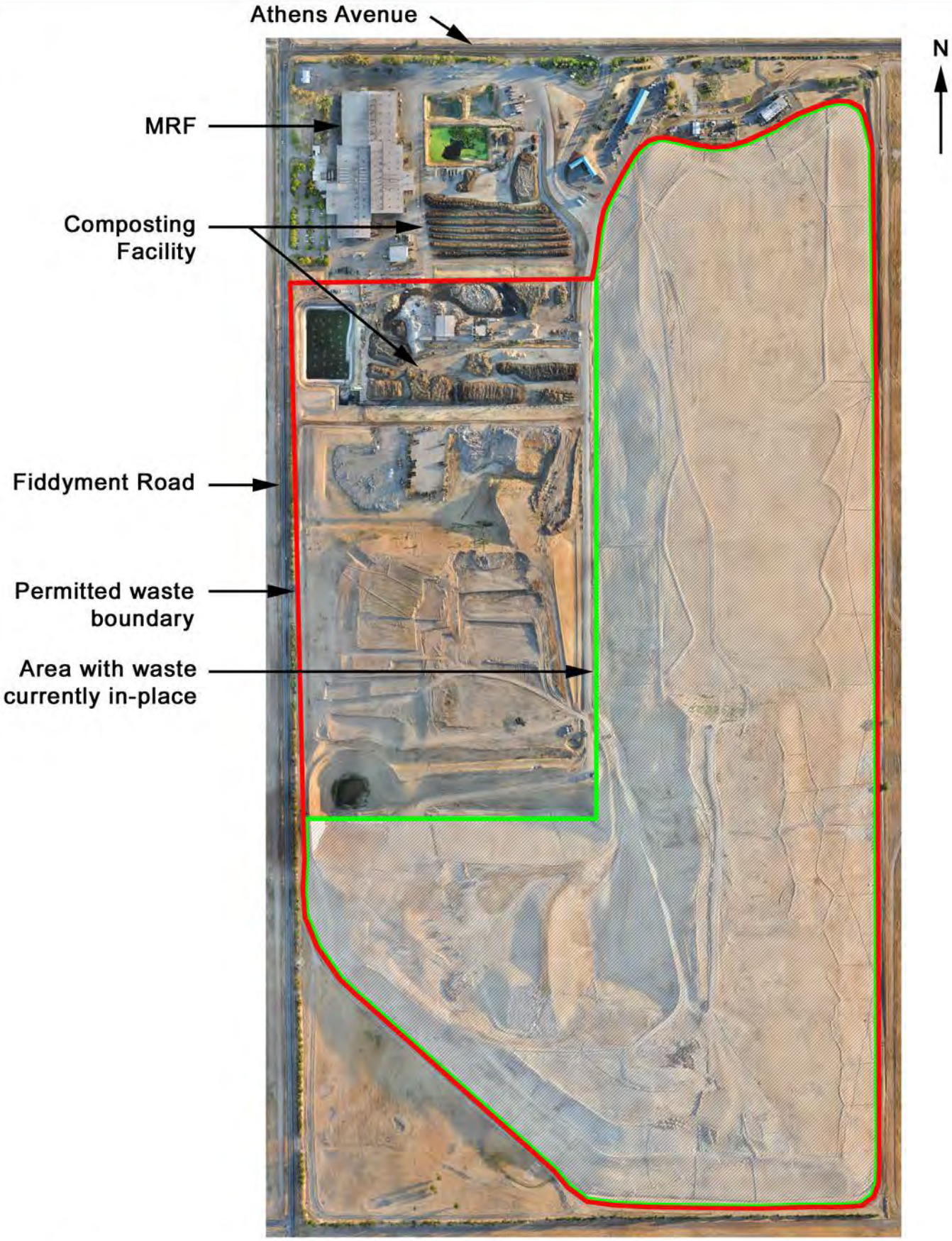

WPWMA Site-Wide Odor Plan
WPWMA Facility Site Layout

FIGURE 8-2

i. Best Management Practices

The following represents the odor minimization BMPs related to the MRF operation.

- Process waste materials within forty-eight (48) hours of receipt of the material. For the purposes of this BMP, “process” means to sort the materials to recover marketable commodities and transport the residue to the landfill for burial.
- ADC generated from MRF fines is screened to a ½-inch minus size thereby reducing the potential for larger pieces of foodwaste to be present in the fines. The MRF Operator is responsible for regularly inspecting and properly maintaining the ADC screening system to ensure this material sizing standard.
- Transport all ADC to the landfill the same day it is produced at the MRF. No overnight storage of ADC at the MRF is allowed.
- Transport residual wastes to the landfill the same day they are produced. Limit overnight storage or residue in trailers to situations in which the MRF is operated outside of the landfill waste acceptance hours.
- Continuously operate the stormwater pond aeration system to the degree: 1) the aerators are fully submerged and 2) the dissolved oxygen level in the pond is less than 1 milligram per liter.
- At the end of daily waste processing operations, remove all unprocessed waste material from the processing lines and equipment. No waste material shall remain on the processing lines and equipment overnight. This provision shall not apply to any processing lines that have experienced a mechanical or electrical failure that precludes the MRF Operator from running the line. In these cases, the MRF Operator shall clear the line(s) of material upon repair of the line(s).
- Remove waste materials from the floors and other surfaces underneath MRF processing equipment following the completion of daily processing operations and return the collected materials to the receiving floor for reprocessing.
- Remove waste materials from the baling areas and recovered product storage floor and return the collected waste materials to the receiving floor following the completion of daily baling operations. Recovered recyclables which have not yet been baled are exempted from this cleaning and removal requirement.

- Remove loose waste and debris around the residue and ADC load-out conveyors at the end of daily operations.
- Close at least two (2) of the three (3) MRF receiving floor roll-up doors each night. The MRF Operator may elect to keep one door open to facilitate ease of inspection of the receiving floor for the purposes of maintaining site security and safety.
- Using a street sweeper or equivalent piece of equipment, sweep the asphalt covered areas surrounding the MRF building daily.
- To minimize system downtime, provide equipment maintenance and repair staff whenever the MRF is processing wastes to respond to and repair system faults and equipment breakdowns.
- Conduct daily preventative maintenance activities to minimize system downtime.
- On a quarterly basis, perform routine maintenance and inspection of the MRF air handling system components to ensure proper and uninterrupted operation.

C. Composting Facility

As used herein, the Composting Facility represents the portion of the WPWMA's facility that receives and processes organic materials for the purposes of producing a marketable soil amendment (Figure 8-2). The following provides additional information related to the operation of the Composting Facility as it relates to odors.

A majority of the materials received and processed at the Composting Facility consist of greenwaste (e.g.: grass, leaves, plants, sticks and small branches). With passage of recent regulations by the State of California (i.e. AB 32, AB 1826, SB 1383), foodwaste and other organic materials such as paper waste will need to be co-composted with greenwaste.

Greenwaste and foodwaste are received directly at the Composting Facility. Other organic materials that may be composted will generally be received as part of the MSW stream at the MRF recovered by the MRF Operator, and subsequently transported to the Composting Facility.

As received, greenwaste generally has a relatively low odor potential as sufficient oxygen is available to prevent significant anaerobic conditions. However, during certain parts of the year (typically early Spring) when there may be alternating cycles of warm weather followed by rain, the amount of grass clippings generated within the county and subsequently received at the WPWMA's facility can increase dramatically. In some cases, the greenwaste can already enter a semi-anaerobic phase (and begin producing odors) before being collected and transported to the WPWMA facility. In these cases, extra care must be taken to process

these materials as soon as practical and introduce them to the composting process to reestablish aerobic conditions.

Foodwaste will most often exhibit a high odor potential upon receipt at the Composting Facility. As such, prompt processing and blending of these materials (as noted in the BMP section below) with processed, shredded greenwaste will help to minimize the odor potential of the foodwaste materials.

The WPWMA utilizes a windrow composting method to process a majority of the greenwaste materials received at the Composting Facility. Windrow composting methods are not approved for use at the WPWMA's site for composting foodwaste, paper waste or any other non-greenwaste materials. The windrow composting method consists of placing ground (shredded) greenwaste in long rows. After placement, the windrows are periodically watered and mechanically turned to ensure sufficient oxygen is available to maintain aerobic conditions within the pile. The act of turning the compost has the potential to release compost-related odors, however failure to turn the compost would lead to anaerobic conditions and have a greater potential for the release of offensive odors.

In response to the regulatory changes noted above, the WPWMA is utilizing aerated static pile (ASP) composting methods (on a pilot test scale[2]) to compost a blend of green and non-green (e.g. food, paper, etc.) organic materials. ASP composting methods involve blending shredded greenwaste with non-green materials and placing the blended material into piles situated above a series of perforated pipes. The pipes are connected to one or more blowers (mechanical air moving systems) that allow air to be drawn from the atmosphere and pushed through the material pile to maintain aerobic conditions. A layer of finished compost is placed on top of the piles to act as a biofilter; this biofilter layer serves to absorb and biologically degrade odorous compounds. Unlike the windrowing method, the materials in the ASP system are not turned or otherwise moved after initial placement and are left in a "static" state until the composting process is effectively completed.

All liquids that contact the compostable materials are directed to one of two on-site composting ponds. Unlike other stormwater ponds located on-site that are designed to collect rainwater and other on-site water that has not come into contact with waste materials and allow any solids to settle before the water is released off-site, compost ponds are designed to preclude any off-site release of liquids that have come into contact with compostable materials. The water collected in the compost ponds can be reapplied to the compost piles to maintain appropriate moisture levels are evaporate to the atmosphere.

[2] The WPWMA anticipates submitting an application to the LEA to fully permit the ASP composting process by July 2020.

The November 2015 odor study commissioned by the WPWMA suggests that the composting operation has the greatest potential for odors and represents nearly 69% of the total site wide odor potential. At the time the study was performed, the WPWMA had not begun its ASP composting pilot testing. In addition to the operational benefits associated with ASP composting methods, the use of ASP has been demonstrated to reduce odor emissions by at least 80% compared to conventional windrow methods.[2,3]

After materials have completed the active composting phase[4], the compost is moved to a separate area to cure before it is ready to be screened and then marketed. During the movement from active composting to curing, the material has some potential to release odors. However, as shown on Figure 8.3 below (source: Figure 5.1 in Appendix B), the odor potential associated with composting operations decreases rapidly and remains relatively low after the first few weeks of the active composting process (windrowing or ASP).

Figure 8.3: Compost Emission Curve

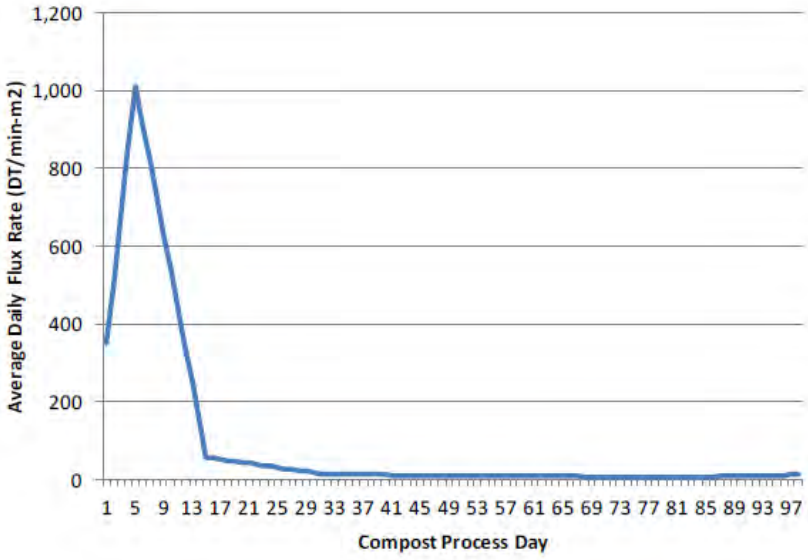

Once cured, the compost is screened to remove contaminants and is then ready for market. Similar to the when the compost is moved from the active to the curing phase, screening of the compost has the potential to release a minor amount of odor

California Code of Regulations Title 14 Section 17863.4 requires that all compostable material handling operations and facilities prepare and maintain a site-specific Odor Impact Minimization Plan (OIMP). The WPWMA's OIMP (Appendix C) provides detailed information regarding design and operating procedures to minimize composting-related odors.

i. Best Management Practices

The following represents the odor minimization BMPs related to the composting operation. As noted above, the highest potential for odors exist during receipt and initial processing of the materials and during the first few weeks of the active composting process. As such, the following BMPs primarily focus on management practices during these initial periods as well as general housekeeping practices.

It is acknowledged that the use of ASP composting methods is still in a pilot testing phase and that any or all of the following provisions are subject to change in the future.

- Comply with all provisions of the approved OIMP in Appendix C.
- Plan and perform material grinding, turning, screening or blending of non-greenwaste materials with ground greenwaste materials consistent with the provisions of Section 8F.
- Perform initial processing (grinding) of green materials within seven (7) calendar days of receipt.
- Grind highly odiferous loads of greenwaste within forty-eight (48) hours of receipt.
- Introduce ground greenwaste into the windrowing or ASP piles within fourteen (14) calendar days of the grinding of the materials.
- Cover foodwaste, paper and/or other compostable materials with ground greenwaste so that no non-greenwaste materials are exposed within two (2) hours of receipt of the foodwaste, paper and/or other compostable materials.
- Move the blended materials to ASP and begin introducing air (as noted below) within seven (7) calendar days of the initial receipt of the foodwaste, paper and/or other compostable materials.
- Limit windrow composting methods to the composting of greenwaste only unless otherwise approved, in writing, by the LEA. All other materials shall be composted using ASP methods.
- Construct and maintain a minimum 12-inch thick biofilter layer comprised of finished, unscreened compost over the entire surface of the ASP compost piles. Biofilter material shall be placed within twenty-four (24) hours of any section of the ASP reaching its maximum height. Based on current material flowrates, it can take between 1 to 3 operational days to fully

construct a new section of ASP with placement of the biofilter layer to follow.

- Introduce ambient air, via a mechanical air supply system, as necessary to generally maintain pile temperatures within the range of 131°F to 168°F. Blowers will be operated on a continuous intermittent schedule (e.g. 5 minutes on, 10 minutes off, etc.) to maintain the appropriate temperature range of the compost piles as noted herein. Blowers shall be used to push ambient air through the piles (positive aeration).
- Maintain materials in the composting windrows for at least eight (8) weeks or in the ASP piles for at least forty-five (45) days as applicable.
- Following the active composting timeframes noted above, maintain the composted materials in a curing pile for at least fifty (50) days prior to final screening of the material.
- Wash down and remove any accumulated liquids, solids and semi-solids that may have leached from the active ASP piles at least once per day.
- Continuously operate the compost pond aeration system to the degree: 1) the aerators are fully submerged and 2) the dissolved oxygen level in the pond is less than 1 milligram per liter.
- Utilize a dedicated continuous dissolved oxygen meter to monitor oxygen levels in the compost ponds.
- On a quarterly basis, sample the compost leachate for the following parameters: pH, dissolved oxygen, total dissolved solids, fixed dissolved solids, total nitrogen and specific conductance.
- Clean and remove sediments from the south composting pond forebay and the north compost pad drainage channel at least quarterly with the first scheduled cleaning to occur by December 31, 2020. Collected sediments shall be promptly mixed with ground greenwaste and reintroduced to the active composting system or immediately transported to the WRSL for disposal and managed in the same method as wastewater treatment plant sludges. In no event shall the collected sediments be allowed to stored overnight without first being mixed or covered with ground greenwaste.
- Clean and remove accumulated compost or other debris on and adjacent to the composting pads semi-annually.

- Drain and clean all membrane-lined composting ponds at least once every four (4) years with the first scheduled cleaning to occur by December 31, 2022.

D. Landfill

As used herein, the "Landfill represents the portion of the WPWMA's facility referred to as the Western Regional Sanitary Landfill (WRSL). The WRSL is approximately 291 acres with approximately 231 acres permitted for disposal activities (Figure 8-2). As of June 2019, approximately 158 acres have received waste for disposal with the remainder identified as future landfill. Based on the currently permitted capacity of the WRSL and current and projected future filling rates, the WPWMA estimates the WRSL has sufficient capacity to operate until at least 2058.

It is the WPWMA's intent to recover and market for recycling or reuse as much material as is technically and economically practical and that is environmentally safe to do so. Wastes received at the WPWMA's facility that cannot be reasonably recovered for recycling or reuse are disposed of at the WRSL.

When the WRSL is not in operation (i.e. not actively receiving waste materials for burial), all in-place wastes are covered by soil or approved alternative daily cover (ADC). This cover serves to reduce the potential for windblown litter, vectors and odors. At the start of daily filling operations, the Landfill Operator establishes one or more daily active working faces where wastes will be disposed. The daily active working face represents the only area(s) at the WRSL where wastes are exposed. On an average day the size of the active working face is generally limited to less than one (1) acre to minimize issues associated with the exposed waste including the potential for odors. At the conclusion of each operating day, the Landfill Operator places a layer of daily cover materials (soil or ADC) over the active working face to completely cover all wastes.

The two primary sources of odor associated with the landfill are: 1) the receipt and burial of wastes and 2) landfill gas related odors. The following section addresses BMPs for minimizing odors related to the receipt and burial of materials; landfill gas related BMPs are addressed separately in Section 8E.

i. Best Management Practices

The following represents the odor minimization BMPs related to the landfilling operation.

- Discuss at the weekly landfill operations meeting, the planned location of each day's filling operations and when areas of

previously buried waste that have been in place for a week or longer will need to be exposed for the purposes of establishing the daily active working face. The planned efforts will be consistent with the provisions of Section 8F.

- Provide at least twenty-four (24) hours' notice (or as soon as practical in the event of an unforeseen circumstance that would result in less than 24 hours' notice) to the WPWMA Program Manager or Senior Civil Engineer of the need to operate the WRSL on weekends, Observed Holidays or outside WPWMA facility Gate Hours.
- Minimize the size of the working face to that necessary to maintain operator and customer safety. A working face between ¼ and ½ acre is considered the minimum safe size with the maximum size of the working face generally limited to one (1) acre.
- Minimize the open-air exposure time of wastes by placing newer wastes over older wastes throughout the operating day. A study commissioned by the WPWMA suggests that odors associated with exposed waste increase over the course of the operating day.[5]
- Bury wastewater treatment plant sludges and other highly odiferous loads immediately upon receipt by covering the materials as quickly as possible with less odiferous wastes.
- When exposing areas of previously buried waste that have been in place for a week or longer, limit the time between removal of the last six (6) inches of soil cover and first placement of additional wastes to no more than one (1) hour.
- Begin placing daily cover materials immediately following receipt of the last load of waste and consistent with the requirements of Title 27, Sections 20680 and 20690 of the California Code of Regulations. Complete daily cover placement within four (4) hours of receipt of the last load of waste.
- Utilize soil or "fines" recovered from the MRF or C&D operation as an ADC as follows:
    - A six-inch minimum layer of on-site, native soil; OR
    - A six-inch layer of MRF fines covered by a six-inch layer of on-site, native soil; OR
    - A six-inch layer of MRF fines covered by a six-inch layer of C&D fines.
    - Restrict use of ADC fines to areas that will receive additional fill within twenty-four (24) hours. Exposure of alternative

daily cover fines in excess of twenty-four (24) hours is prohibited.

- Daily cover shall be compacted to minimize odor transmission. The minimum level of compaction may be achieved via track-walking the materials with a Caterpillar D-6 low ground pressure dozer or equivalent.

- Daily cover soil may be removed at the start of the operational filling day to minimize overall soil disposal rates; MRF fines and dried sewage sludge used as ADC shall not be removed and shall remain in-place once applied by the Landfill Operator.
- Submit a fill plan to the WPWMA for review and approval each month detailing the following information:
  - Subsequent forty-five (45) days of fill operations.
  - Subsequent one hundred eighty (180)-day fill area.
  - Landfill cover plan indicating areas containing intermediate cover and areas that will have intermediate cover within the subsequent one hundred eighty 180-day period.
  - Areas where surface LFG conveyance piping is currently located that the Landfill Operator believes will need to be relocated to accommodate the filling operations noted above.

  Provide five (5) days written notice to the WPWMA prior to deviating from the fill plan except in the case where the Landfill Operator believes surface LFG conveyance piping needs to be disconnected or relocated. Provide thirty (30) days written notice to the WPWMA regarding any need to relocate or disconnect LFG piping. WPWMA will provide to the PCAPCD within three (3) business days of receipt, a copy of any such thirty (30) day written notice regarding the need to relocate or disconnect LFG piping.
- WPWMA will maintain reasonably accurate as-built drawings, in AutoCAD format, of all surface and sub-surface GCCS infrastructure and will provide such information to the Landfill Operator.
- Place and compact a minimum of twelve (12) inches of intermediate soil cover over areas where landfilling operations will not occur for one hundred eighty (180) days or more consistent with the regulatory requirements identified in Title 27, Section 20700 of the California Code of Regulations. The depth of any previously placed soil daily cover shall apply towards the intermediate soil depth requirement. The minimum level of

compaction may be achieved via track-walking the intermediate cover soils materials with a Caterpillar D-8 dozer or equivalent.

E. Landfill Gas

Landfill gas (LFG) is the byproduct of the anaerobic decomposition of wastes. As such, the composition of the waste being landfilled can have a direct impact on the generation rate and chemical constituency of the landfill gas.

Only the organic fraction of the landfilled waste will decompose and produce LFG. The generation rate of LFG generally increases over time with development of the landfill and usually peaks shortly after the landfill has reached final capacity. However, as a result of the state's mandate to reduce the amount of organic materials landfilled over time, it is reasonable to conclude that the quantity of LFG per unit volume of disposed waste may decline also over time.

LFG is composed predominately of equal parts methane and carbon dioxide; both odorless gases. LFG also includes trace amounts of volatile organic compounds (VOCs), sulfur-based compounds and ammonia. It is generally the sulfur-based compounds and ammonia that result in LFG related odors.

Federal and state law require that landfills that have the potential to produce a certain amount of LFG install a GCCS. The WRSL meets these criteria; in 1996 the WPWMA installed LFG collection wells and a flare system to destroy the LFG via combustion. Overtime as the WRSL has continued to develop, the WPWMA has expanded, modified and upgraded its GCCS. The current GCCS includes a series of collection wells that remove the LFG from the waste mass (via an applied vacuum) and conveys the LFG in an enclosed piping system to a central location (blower/flare station) where the LFG is either directed to the on-site Energy Developer to produce electricity or to an enclosed ground flare where it is destroyed through high-temperature combustion.

The design and operation of LFG systems is prescribed in both federal and state law. The U.S. EPA established New Source Performance Standards/Emission Guidelines[6] for municipal solid waste landfills intended to reduce uncontrolled emissions of LFG and regulate release to the atmosphere of non-methane organic compounds entrained in LFG (40 CFR Part 60 Subpart WWW). The California Air Resources Board also approved a regulation intended to reduce emissions of methane gas from landfills.[7] While both regulations are intended to reduce methane emissions to the atmosphere, compliance with the regulations also serves to reduce the potential for LFG-related odors.

The WPWMA's GCCS operations and maintenance consultant developed and follows standard operating procedures to ensure the LFG system is

operated in compliance with the applicable regulations. These standard operating procedures are included in Appendix F.

i. Best Management Practices

The following represents the odor minimization BMPs related to operation of the LFG collection and control system. For the purposes of this section, these BMPs shall apply to all facility operators, contractors and consultants that have the potential to impact the operation of the LFG system. This includes, but is not limited to, the 1) the WPWMA's operations and maintenance consultant, 2) any third-party construction contractors that are hired to work on any part of the LFG system or the WRSL that would require a shutdown of the LFG system for any reason, 3) the Landfill Operator to the degree their operations require a shutdown of the LFG system for any reason, and 4) the Energy Developer. While not every BMP identified below will apply to every entity that has the potential to impact the operation of the LFG system, all entities should adhere to the appropriate BMPs to limit the potential for a disruption to the operation of the LFG system.

- Comply with all provisions of the approved standard operating procedures in Appendix F.
- Comply with the provisions of 40 CFR Part 60 Subpart WWW and Title 17, CCR Section 95460, et seq.
- Maximize the recovery of LFG from the WRSL while minimizing the potential for subsurface combustion events and oxygen levels in excess of three percent (3%) by volume in the extracted LFG stream.
- Plan and perform all operations that have the potential to disrupt operations of the LFG collection and control system consistent with the provisions of Section 8F.
- Avoid operations that have the potential to disrupt LFG collection and control system operations on weekends, Observed Holidays, and outside of the WPWMA's Gate Hours.
- Where landfill operations require the temporary disconnection of landfill gas collection or conveyance equipment, coordinate with the WPWMA and Landfill Operator to minimize the potential for fugitive LFG emissions by:
    - Minimizing the number of LFG wells that must be temporarily taken off-line
    - Adjusting adjacent LFG wells in an attempt to capture LFG that would otherwise be captured by the wells that are to be disconnected

- Coordinate schedules with the Landfill Operator to reconnect the LFG as soon as it is safe and practical to do so.

- Although not required, the WPWMA will consider placing additional soil cover in excess of regulatory requirements identified in Title 27, Section 20700 of the California Code of Regulations or the use of cover membranes or other non- or low-permeable cover systems when odors associated with LFG surface emissions cannot be reasonably controlled through consistent implementation of the BMPs noted herein.

F. Planning and Scheduling Operational Activities

Each facility operator, contractor and consultant shall utilize the daily odor risk forecasting tool described in Section 10B to plan their respective operations. Where possible, operations that may result in noticeable off-site odors should be avoided during:

- Any continuous three (3) hour period where each hourly risk potential is noted as “HIGH”; or
- Any continuous six (6) hour period where each hourly risk potential is noted as “MODERATE” or “HIGH”.

Appendix D provides an example of these odor risk avoidance periods.

If a facility operator, contractor or consultant identifies that a specific operation or activity must occur to comply with operational needs or compliance with permits and that the timing of the identified activity will not comply with the aforementioned standards, the facility operator, contractor or consultant shall submit notification to the WPWMA, via reports@WPWMA.ca.gov, which includes the following information:

- Description of the activity or operation.
- Date(s) and time period(s) of the activity or operation.
- Reason why the activity or operation could not reasonably be delayed or rescheduled.
- Specific measures taken to reduce the potential for odors.

Any such notice must be submitted to the WPWMA within twenty-four (24) hours of initially conducting the activity or operation.

9. WEATHER & TOPOGRAPHY

The WPWMA’s facilities are located within the Sunset Area and immediately north of the Placer Ranch Specific Plan area. The following is an excerpt from the Draft Environmental Impact Report for the Sunset Area Plan/Placer Ranch Specific Plan[8].

[U]nincorporated land in west Placer County is part of the Sacramento Valley Air Basin (SVAB). The SVAB comprises the western portion of Placer County, the eastern portion of Solano County, and all of Shasta, Tehama, Glenn, Butte, Colusa, Sutter, Yuba, Yolo, and Sacramento Counties.

Ambient concentrations of air pollutants are determined by the amount of pollutants emitted and the atmosphere's ability to transport and dilute such emissions. Natural factors that affect transport and dilution include terrain, wind, atmospheric stability, and the presence of sunlight. Therefore, existing air quality conditions in the SVAB are determined by such natural factors as climate, meteorology, and topography, in addition to the level of emissions released by existing air pollutant sources. These factors are discussed separately below.

The SVAB is a relatively flat area bordered by the north Coast Ranges to the west and the northern Sierra Nevada to the east. Air flows into the SVAB through the Carquinez Strait, the only breach in the western mountain barrier, and moves across the Sacramento–San Joaquin Delta (Delta) from the San Francisco Bay Area.

The Mediterranean climate in the SVAB is characterized by hot, dry summers and cool, rainy winters. During the summer, daily temperatures range from 50 degrees Fahrenheit (°F) to more than 100°F. The average winter temperature is a moderate 49°F. The inland location and surrounding mountains shelter the area from much of the ocean breezes that keep the coastal regions moderate in temperature. Most precipitation in the area results from air masses that move in from the Pacific Ocean, usually from the west or northwest, during the winter months. The prevailing winds are moderate in speed and vary from moisture-laden breezes from the south to dry land flows from the north.

The mountains surrounding the SVAB create a barrier to airflow, which leads to the entrapment of air pollutants when meteorological conditions are unfavorable for transport and dilution. The highest frequency of poor-quality air movement occurs in the fall and winter when high-pressure cells are present over the SVAB. The lack of surface wind during these periods, combined with the reduced vertical flow caused by a decline in surface heating, reduces the influx of air and leads to the concentration of air pollutants under stable metrological conditions. Surface concentrations of air pollutant emissions are highest when these conditions occur in combination with agricultural burning activities or with temperature inversions, which hinder dispersion by creating a ceiling over the area and trapping air pollutants near the ground.

Elevated levels of ozone typically occur May through October in the SVAB. This period is characterized by poor air movement in the mornings with the arrival of the Delta breeze from the southwest in the afternoons. In addition, longer daylight hours provide ample sunlight to fuel photochemical reactions between reactive organic gases (ROG) and oxides of nitrogen (NOX), which

form ozone. Typically, the Delta breeze transports air pollutants northward out of the SVAB; however, a phenomenon known as the Schultz Eddy prevents this from occurring during approximately half of the time from July to September. The Schultz Eddy phenomenon causes the wind to shift southward and blow air pollutants back into the SVAB. This phenomenon exacerbates the concentration of air pollutant emissions in the area and contributes to the area violating the ambient-air quality standards.

The local meteorology of the project area and surrounding area is represented by measurements recorded at the Lincoln Regional Airport (Karl Harder Field) station. The National Oceanic and Atmospheric Administration's National Centers for Environmental Information has records for that station dating back to 2009. According to these data, the average annual precipitation in the project area is approximately 20 inches, January temperatures range from a normal minimum of 36°F to a normal maximum of 56°F, and July temperatures range from a normal minimum of 61°F to a normal maximum of 96°F. The predominant wind direction is from the southeast (NOAA 2018).

While the PCAPCD does not classify odors as air pollutants, the meteorological and topographical conditions that affect the concentration and dispersion of air pollutants generally apply to the localized concentration and dispersion of odors as well. As noted above, the area surrounding the WPWMA's facilities generally experiences moderate wind patterns and minimal air movement or temperature inversion conditions the majority of the year. These factors can result in poor dispersion of odors and result in a greater potential for WPWMA facility-related and other regional odors to be perceptible by nearby receptors regardless of facility operations or time of day.

10. ODOR MONITORING AND INVESTIGATIONS

The following provides an overview of the WPWMA's effort to estimate potential off-site dispersion of odors generated from its facility, solicit feedback from nearby receptors related to when they experience odors they believe are from the WPWMA's facility, and to investigate and monitor on-site and off-site odors. WPWMA staff responsible for conducting odor monitoring, investigations, operational evaluations and responses to the public, PCAPCD, LEA or other applicable agencies include the WPWMA's a) Program Manager, b) Senior Civil Engineer, c) Associate or Assistant Engineers, d) Environmental Resource Specialist(s) and e) Engineering Technician(s).

A. Odor Monitoring and Dispersion Modeling System

The WPWMA employs a site-wide continuous odor monitoring and dispersion modeling system and meteorological station. Data collected by onsite sensors along with static estimates of odor flux from select sources at the WPWMA's facility are combined with atmospheric data to produce air (odor) dispersion models using the CALPUFF[9] modeling system. Values for the static odor flux emissions were developed using a U.S.

EPA-approved flux chamber testing methodology as part of the WPWMA's 2015 Odor Study (Appendix B).

The odor monitoring and dispersion modeling system is utilized to provide objective, quantifiable, visual representations of the probable off-site odor concentrations over time associated with the WPWMA's operations.

B. Predictive Odor Risk Modeling

The WPWMA's odor monitoring and dispersion system includes a feature that uses weather forecast data to prepare a 3-day odor risk forecast that identifies periods of time (on an hourly basis) where there could be an increased potential for odors to be experienced off-site.

The odor risk forecast is updated daily and made available to the facility operators, contractors and consultants to help them better plan their operations and minimize the potential for off-site odors. Use of this forecasting tool is included as a BMP in Section 8. An example of the odor risk forecast is included in Appendix D.

The following criteria are used when determining the hourly odor risk assessment:

Risk Zone 1:

- If the forecast wind speed is lower than 1 meter per second (2.2 miles per hour), the risk is set to "HIGH"
- If the forecast wind speed is between 1 and 3 meters per second (2.2 to 6.7 miles per hour), the risk is set to "MODERATE"
- If the forecast wind speed is greater than 3 meters per second (6.7 miles per hour), the risk is set to "LOW"

Risk Zone 2:

- If the forecast wind speed is lower than 1 meter per second (2.2 miles per hour), the risk is set to "MODERATE"
- If the forecast wind speed is greater than 1 meter per second (6.7 miles per hour), the risk is set to "LOW"

Figure 10-1: High Odor Risk Wind Direction Zone

The WPWMA intends to use on- and off-site odor monitoring results to calibrate and verify the accuracy and efficacy of this odor risk tool and will adjust the aforementioned criteria, as necessary, to provide reasonable and realistic odor risk predictions for use by the WPWMA, its facility operators, contractors and consultants.

C. Routine On- and Off-site Odor Monitoring by WPWMA Staff

In addition to the odor investigation efforts by WPWMA staff as noted in Section 10E below, the WPWMA conducts periodic on- and off-site odor monitoring to record the type and intensity of odors that have the potential to be experienced by nearby receptors. Figure 10-2 identifies the off-site odor monitoring locations.

On- and off-site monitoring is performed weekly and at times when odors are expected to be the most noticeable. Based on historical odor notification records received by the WPWMA, odors are most commonly reported as being experienced between the hours of 6 am and 9 am and between 5 pm and 8 pm. As a result, routine on- and off-site monitoring will most commonly be performed during the 6 am to 9 am time window. At each observation location, WPWMA staff record: 1) time, 2) noticeable odors and their description and intensity (on a scale of 1 to 5 with 5 being the most intense), and 3) specific observations about on-site facility operating conditions or off-site conditions (e.g. if it is trash collection day in the area, construction activities, surrounding land use conditions, etc.) that could be contributing to perceived odors. A template for the inspection report is included in Appendix E.

Upon return to the office, WPWMA staff will review and make a qualitative assessment of odor dispersion estimates from the WPWMA's dispersion modeling system corresponding to the recorded time of field observations, and a brief statement of how well these conditions matched with observed field conditions.

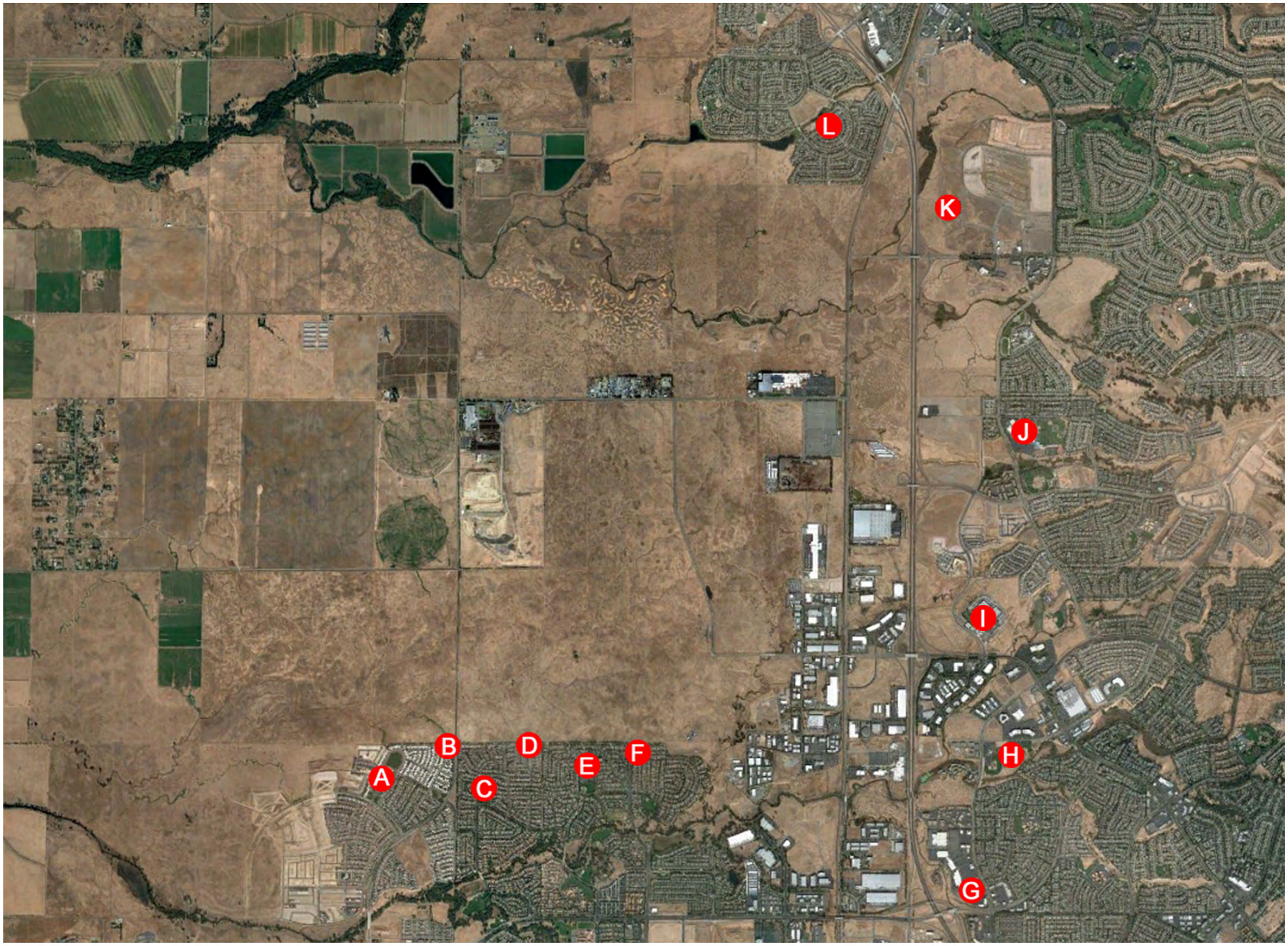

WPWMA Site-Wide Odor Plan
Routine Offf-Site Odor Monitoring Locations

FIGURE
10-2

In the event that specific areas of the WPWMA's operations are noted as emitting higher than average odors, WPWMA staff meet and confer with its applicable facility operators, contractors or consultants to identify and document immediate mitigation measures that can be implemented by the applicable entity to reduce the potential for off-site odors.

D. Odor Notification System

The WPWMA utilizes an online odor notification system (using SurveyMonkey.com as the platform) that allows individuals who experience an odor to report it directly to the WPWMA. A link to the online notification system is prominently displayed on the WPWMA's website (www.WPWMA.ca.gov).

The online notification system provides users the ability to report the following information to the WPWMA:

1. Date and time the odor was first experienced
2. Duration of the odor
3. A description and relative intensity of the odor
4. The location where the odor was experienced
5. Individual's contact information (optional)
6. Any other comments pertinent to the notification (optional)

When an person files an odor notification with the WPWMA, an email summarizing the data noted above is automatically generated (using www.Zapier.com) and emailed to WPWMA and PCAPCD personnel. Additionally, select WPWMA staff (Program Manager, Environmental Resources Specialist and Engineering Technician) receive a text message (also generated by www.Zapier.com) that summarize the notification. Zapier's algorithm monitors the Survey Monkey website and sends the email and text alerts within fifteen (15) minutes of the notification being filed.

E. Odor Notification Investigation Protocol

It is the goal of the WPWMA to conduct a field investigation in the reported area for as many of odor notifications as the WPWMA deems practical.

When the WPWMA receives an odor notification via its website or from the PCAPCD, the following criteria will be used to determine if a field investigation will be conducted:

1. Was the odor notification filed in a timely manner and is it reasonable to conclude the reported odor conditions are still applicable? Unless the notification would suggest otherwise, field investigations will only be performed when odors are reported within two (2) hours of being experienced.

2. Is the identified location of the odor proximate enough to the WPWMA's facilities to suggest the WPWMA's operations could be a contributing source of the reported odors? Based on historical data, the WPWMA considers any notifications outside of a five (5) mile radius measured from the center of its facility to not be sufficiently proximate to warrant a field investigation. Figure 10-3 represents the area in which field odor investigations will generally be conducted.
3. A field investigation will not be conducted for notifications received outside of normal business hours (8 am to 5 pm, Monday through Friday) or on WPWMA Observed Holidays unless specifically directed by the WPWMA Board of Directors or WPWMA Executive Management or as noted below.
    - If five (5) or more independent notifications are received within a one (1) hour period and when:
        - the notifications are clustered within a ¼-mile radius of one another
        - the odors are reported within one (1) hour of being experienced
        - the reported odor intensities are equal to or greater than 4
        - the notifications include the individual's name, phone number and email contact information
4. A field investigation will not be conducted if conditions could put WPWMA staff in physical danger (e.g. during thunderstorms, heavy rains, extreme heat, etc.) or would necessitate WPWMA staff to trespass on private property or other clearly marked non-accessible areas.
5. A field investigation will not be conducted if insufficient staff is available to conduct the investigation or other business needs of the WPWMA are determined by WPWMA's management (Program Manager or above) to be or greater immediate importance to facility operations, the environment, or public health than performing the investigation.

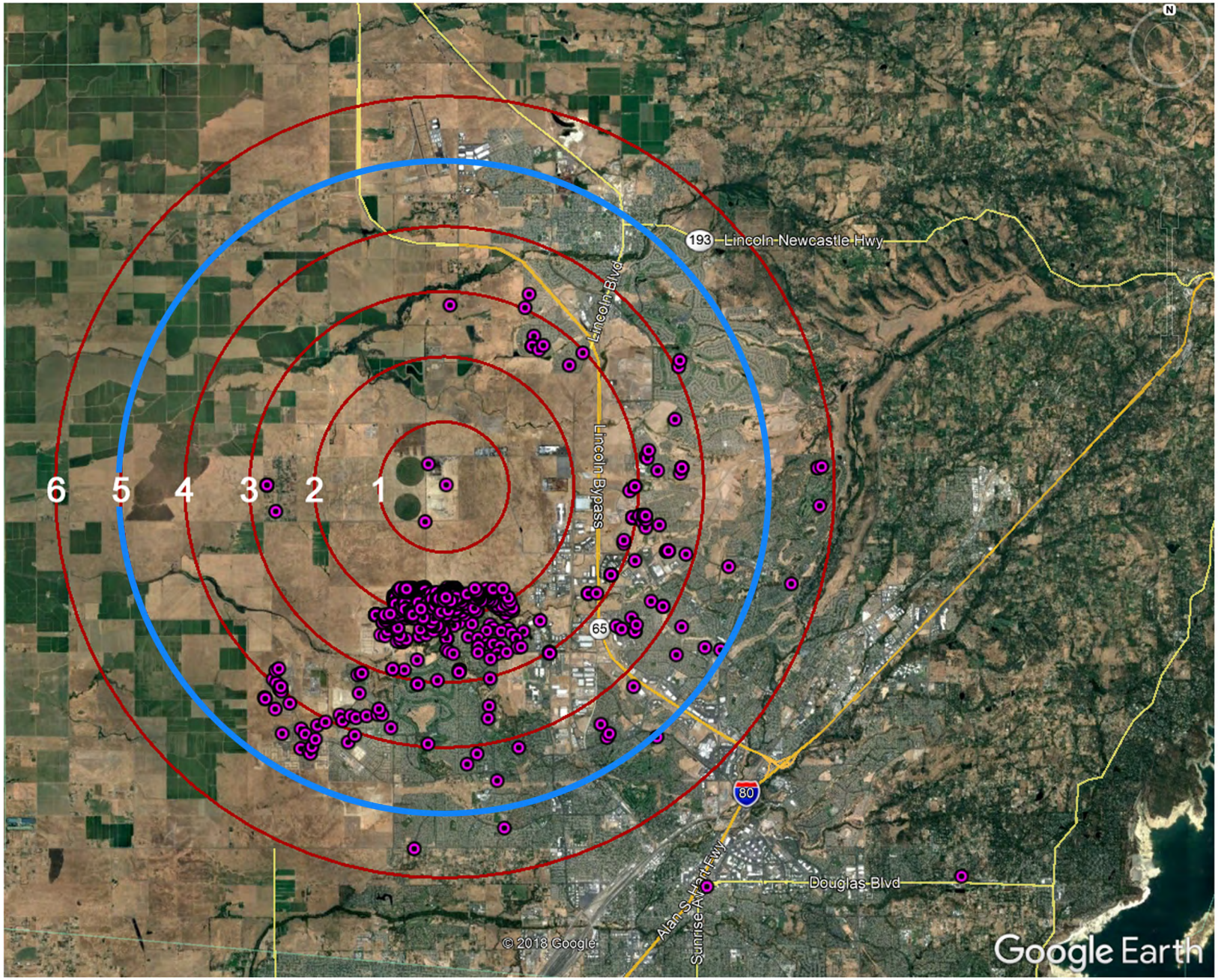

CELEBRATING OVER 40 YEARS OF SERVICE
WPWMA
EST. 1978

WPWMA Site-Wide Odor Plan
Location of Odor Notifications and 5-Mile Investigation Zone

FIGURE
10-3

If, based on the above criteria, a field odor investigation is warranted, one or more WPWMA staff will perform the investigation in accordance with the following protocol:

1. Identify where the reported location is relative to the WPWMA's facility.
2. Check the WPWMA's facility weather station and observe the surrounding environment to ascertain general wind speed and direction and any other relevant atmospheric conditions.
3. If leaving from the WPWMA offices, wear a safety vest with WPWMA logo, Placer County-issued or other form of photo identification, and WPWMA business cards. If possible and practical, use a WPWMA vehicle. Proceed to the reported address noting any presence of odors between the WPWMA's facility and the subject address. Note the exact time of arrival at the subject location.
4. If safe, walk around the vicinity of the reported address and record any noticeable odors. To the degree possible, document a description of the odor(s) and rank the intensity on a scale of 1 to 5 with 5 being the most intense. If no odors were detected, record as "No odor detected".
5. If members of the public are noted outdoors in the vicinity of the subject address (e.g. at a park, gas station, outside their residence, etc.), inquire if they smell (or smelled) anything recently that would corroborate the notification. Identify and explain who you are and what you are doing. Ask open ended, non-leading questions to not inadvertently bias responses.
6. Prior to leaving the area, note the exact time of departure. If returning the WPWMA's facility, attempt to follow a route that is directly downwind of the facility (and upwind of the reported location) noting any change in odor and intensity.
7. If any of the odors noted during the field investigation are reasonably identifiable as potentially emanating from the WPWMA's facility, conduct a brief facility inspection of the suspect operations to identify any factors that may have resulted in an increased release of odors (e.g. compost turning and grinding operations, recent receipt of highly odiferous loads, GCCS shutdown, etc.)
8. To the degree possible, document the findings within 24 hours using the Investigation Summary Report form included as Appendix E.

F. Odor Notification Investigation Report Procedures

The following summarizes the procedures the WPWMA follows for preparing and issuing an odor notification investigation report:

1. Prepare and download a video clip from the WPWMA's odor monitoring and dispersion modeling system that displays the estimated odor dispersion plume relative to the location identified in the odor notification. Depending on conditions and other proximate (time and location) odor notifications, prepare the video clip to begin approximately 30 minutes to 1 hour prior to the earliest time the odor was reported as first being experienced and approximately 1 hour after the latest time the odors were experienced.
2. Download the relevant information from the Odor Notification System and the Odor Monitoring and Dispersion Modeling System for incorporation into the investigation report template shown in Exhibit D.
3. Identify and select the nearest upwind, pre-defined modeling location for the purposes of identifying and recording site and time-specific odor intensity estimates for inclusion in the report template.
4. Add a summary of the onsite investigation (if any) to the report template.
5. Email the completed report template and video clip to the individual who reported the odor (if an email was provided) and to the PCAPCD.

G. Operational Review, Analysis and Adjustment

If, as a result of on-site or off-site odor monitoring (including odor notification field investigations), WPWMA staff are able to reasonably identify one or more of its facility operations as being a contributor to the documented odors, WPWMA staff will meet and confer with its applicable facility operator(s), contractors or consultants to identify factors that may have resulted in an increased release of odors.

As part of this discussion, WPWMA staff and the applicable facility operator(s), contractors, or consultants will work to determine if any of the identified BMPs were not met which, if implemented, may have reduced the potential for the odor to noticeable off-site.

If it is determined that an identified BMP was not followed, the WPWMA will submit a Non-Compliance Event Form to the PCAPCD and WPWMA staff or the applicable facility operator(s), contractors or consultants will provide the necessary follow-up and training of operational staff to ensure the BMPs are adhered to.

If it is determined that the identified BMPs were followed but were insufficient on ten (10) or more occasions within a one-year period,

changes to the applicable facility operation(s) may be implemented (to the degree they are technically and economically feasible and fully comply with all applicable laws and operating permit conditions) which could include, but not necessarily be limited to, the following:

1. Identify additional BMPs, including investigation or identification of emerging technologies or innovative practices, and update the SWOP as appropriate;
2. Reduce the frequency of the operational practice to the degree practical while continuing to maintain regulatory compliance with all other material throughput requirements and to maintain customer and facility operator safety;
3. Provide information to neighbors (via the WPWMA's website) regarding operational practices or facility construction activities that have the potential for increased odors and an estimate of the possible duration of the applicable operational practice or construction project.

H. Odor Monitoring and Investigation Document Retention Policy

All information collected or produced under this section, including but not limited to, routine on- and off-site odor investigation findings and reports, odor notification information received by the WPWMA via its online odor notification system, odor notification investigation reports and findings related to any necessary operational review and adjustment will be kept in electronic format for at least three (3) years and will be available for review upon request.

11. PUBLIC EDUCATION & OUTREACH

The WPWMA continues to engage with local residents to help educate and inform them about the critical function the WPWMA plays in managing solid wastes generated in Placer County in an environmentally secure and financially stable manner while meeting federal and state regulations related to solid waste management.

At the appropriate time and venue, the WPWMA is also able to provide information about facility and non-WPWMA odors sources, efforts by the WPWMA to reduce odors at its facility, mechanisms for the public to report odors they experience directly to the WPWMA, and the procedures the WPWMA uses to investigate and follow-up on reported odors.

Opportunities to engage the public regarding odors include, but are not necessarily limited to, the following:

A. Annual Meetings

Beginning in 2011, the WPWMA has conducted an annual public meeting at its facility designed to specifically engage nearby residents who have the potential to experience odors associated with operation of the WPWMA's facility. These meetings have typically focused on the

WPWMA providing information about its operations, why odors from these operations may be experienced by nearby residents and specific efforts the WPWMA has taken to monitor, measure and reduce odors associated with its operation. The meetings also serve to provide an open forum for residents to engage directly with WPWMA staff.

Subject to the limitations noted in Section 14 of this SWOP, the WPWMA intends to continue conducting these meetings in the future to the degree the public finds them helpful and informative.

B. Website

The WPWMA will post and maintain an up to date version of this SWOP on its website. Information from the annual meetings noted above will also be posted and maintained on the WPWMA website.

To provide timely, useful information to the public and the PCAPCD regarding potential odor events, the WPWMA will investigate developing an area on its website devoted to identifying current operational factors (e.g.: anticipated GCCS downtime for maintenance or construction, after hours or weekend operation of the WRSL, significant short-term variations in the waste received that could result in excessive odors, etc.) that could lead to the increased perception of off-site odors.

C. National Night Out Event

When possible, and when invited by the sponsoring neighborhoods, WPWMA staff will attend National Night Out events at proximate neighborhoods to provide information about the WPWMA's facility and answer questions about odors and how they can be reported to the WPWMA and the PCAPCD.

D. Coordination with Neighborhood and Homeowner Associations

The WPWMA will contact each of the neighborhood or homeowner associations in Lincoln, Rocklin and Roseville that are located within five (5) miles of the WPWMA's facility for the purposes of establishing a consistent method of communicating with these communities regarding facility odor issues. The WPWMA will suggest that each interested association appoint a representative that will serve as the primary contact for communications with the WPWMA. The emphasis of these communications will be to inform the public about the critical public service the WPWMA provides, how and why odors from the operation may be experienced, how to report odors to the WPWMA, and any known operations or projects by the WPWMA that may result in increases to notable odors.

As a part of these (and other appropriate outreach venues), WPWMA will provide information on how to report odors to the WPWMA via its on-line odor notification system.

12. REVIEW OF ODOR CONTROL TECHNOLOGIES

WPWMA staff will regularly monitor the solid waste industry, including active participation in the Solid Waste Association of North America trade group, to identify, evaluate and consider implementation of new odor control technologies or operating methodologies and will report and/or recommend implementation of the identified technologies or methodologies to its Board of Directors at a regularly scheduled meeting.

13. REPORTING AND RECORDKEEPING

All records and reports prepared or received in accordance with the provisions of this SWOP will be maintained by the WPWMA for a period of three (3) years and will be made available for review by the public in accordance with applicable law.

14. WPWMA BOARD APPROVAL PROCESS AND AVAILABILITY OF FUNDING

Any and all actions noted in this SWOP are subject to the approval by the Western Placer Waste Management Authority Board of Directors, including but not limited to the annual allocation of financial resources to cover the cost of all equipment and labor necessary to perform these actions and the need to comply with all current and future regulatory mandates.

REFERENCES

[1] Placer County Department of Public Works. (1977). *Southwestern Placer County Regional Sanitary Landfill Environmental Impact Report*, (State Clearinghouse #77121995). Page 6

[2] Environmental Management Consulting/C.E. Schmidt, PhD, *WPWMA Odor Assessment* (2015)

[3] T.R. Card and C.E. Schmidt (2012, March 14) *Air Emissions Control for Composting Operations*. Retrieved from https://www.biocycle.net

[4] As defined in California Code of Regulations Title 14, Division 7, Chapter 3.1

[5] Environmental Management Consulting/C.E. Schmidt, PhD, *Landfill Active Face Odor Management Handbook* (2019)

[6] http://www.epa.gov/stationary-sources-air-pollution/municipal-solid-waste-landfills-new-source-performance-standards

[7] https://ww3.arb.ca.gov/regact/2009/landfills09/landfillfinalfro.pdf

[8] Placer County Community Development Resources Agency, Planning Services Division. (2018). *Draft Environmental Impact Report: Sunset Area Plan/Placer Ranch Specific Plan* (State Clearinghouse #2016112012) Page 4.3-2

[9] https://en.wikipedia.org/wiki/CALPUFF

APPENDIX A:
BMP CHECKLIST

Site-Wide Odor Plan- Operational Best Management Practices Checklist

Date		Prepared by:	

MRF

1	Process MSW within 48 hours of receipt	YES		NO	
NOTE: May not be able to be measured. Based on reasonable observations does it appear materials have been processed within the required timeframe?					
2	ADC screened to remove oversized materials	YES		NO	
If NO, document observation.					
3	No overnight storage of ADC	YES		NO	
If NO, document observation.					
4	No overnight storage of residue	YES		NO	
If NO, document observation.					
5	Stormwater pond aeration system operating	YES		NO	
If NO, document observation or check appropriate box. ☐ Insufficient water volume ☐ DO reading ≥ 1 mg/l reading					
6	No overnight storage of residue	YES		NO	
If NO, document observation or check appropriate box. ☐ MRF operated outside of Landfill waste acceptance hours.					
7	Waste removed from processing lines at end of shift	YES		NO	
If NO, document observation or check appropriate box. ☐ Mechanical or electrical issue limiting operability.					
8	Waste removed from floors and other surfaces underneath processing equipment	YES		NO	
If NO, document observation or check appropriate box. ☐ Cleaning in process.					
9	Waste removed from floors and other surfaces underneath processing equipment	YES		NO	
If NO, document observation or check appropriate box. ☐ Cleaning in process.					
10	Waste removed from floors and other surfaces underneath processing equipment	YES		NO	
If NO, document observation or check appropriate box. ☐ Cleaning in process.					
11	Waste removed around baling areas	YES		NO	
If NO, document observation or check appropriate box. ☐ Cleaning in process.					
12	Waste removed around ADC load-out area	YES		NO	
If NO, document observation or check appropriate box. ☐ Cleaning in process.					
13	Close at least 2 of the 3 MRF receiving floor doors at the end of the day	YES		NO	
If NO, document observation or check appropriate box. ☐ Confirmed via CCTV cameras.					
14	Sweep asphalt areas around the MRF	YES		NO	
If NO, document observation or check appropriate box. ☐ Cleaning in process.					

Site-Wide Odor Plan- Operational Best Management Practices Checklist

Compost Facility

1	Plan and perform operations consistent with weather predictions and SWOP Section 8F	YES		NO	
NOTE: Based on reasonable observations does it appear operations were planned consistent with the daily odor risk forecast? If NO, document observation.					
2	Perform initial grinding of greenwaste within 7 days of receipt	YES		NO	
NOTE: May not be able to be measured. Based on reasonable observations does it appear materials have been processed within the required timeframe? If NO, document observation.					
3	Perform initial grinding of highly odiferous load of greenwaste within 48 hours of receipt	YES		NO	
NOTE: May not be able to be measured. Based on reasonable observations does it appear materials have been processed within the required timeframe?					
4	Introduce ground greenwaste to windrows or ASP within 14 days of grinding	YES		NO	
NOTE: May not be able to be measured. Based on reasonable observations does it appear materials have been introduced to windrows or ASP within the required timeframe? If NO, document observation.					
5	Cover foodwaste and other compostable materials with ground greenwaste within 2 hrs	YES		NO	
NOTE: May not be able to be measured. Based on reasonable observations does it appear materials have been covered within the required timeframe?					
6	Move applicable materials to ASP and begin introducing air within 7 days	YES		NO	
NOTE: May not be able to be measured. Based on reasonable observations does it appear air was introduced within the required timeframe? If NO, document observation.					
7	Only windrow compost greenwaste	YES		NO	
If NO, document observation.					
8	Biofilter placed over ASP within 24 hours of a section reaching maximum height	YES		NO	
If NO, document observation.					
9	ASP air system connected and operational	YES		NO	
If NO, document observation.					
10	Maintain materials in windrows or ASP for minimum prescribed timeframes	YES		NO	
Will require documentation from MRF Operator.					
11	Maintain materials in curing piles for minimum prescribed timeframes	YES		NO	
Will require documentation from MRF Operator.					
12	Wash down ASP surface areas daily	YES		NO	
If NO, document observation.					
13	North compost pond aeration system operating	YES		NO	
If NO, document observation or check appropriate box. ☐ Insufficient water volume ☐ DO reading ≥ 1 mg/l reading					
14	South compost pond aeration system operating	YES		NO	
If NO, document observation or check appropriate box. ☐ Insufficient water volume ☐ DO reading ≥ 1 mg/l reading					

Site-Wide Odor Plan- Operational Best Management Practices Checklist

Landfill

1	Minimize size of working face necessary to maintain safety	YES		NO	
NOTE: Based on reasonable observations does it appear the working face is as small as practical and safe? If NO, document observation.					
2	Minimize open air exposure time of wastes	YES		NO	
NOTE: Are newer wastes being placed over older wastes on a consistent basis? If NO, document observation.					
3	Bury sludge and other highly odiferous loads immediately upon receipt	YES		NO	
If NO, document observation.					
4	Begin placing daily cover immediately following last load of waste	YES		NO	
If NO, document observation.					If NO, document observation.
5	Utilize soil, MRF and C&D fines as specified in SWOP	YES		NO	
If NO, document observation.					

APPENDIX B:
2015 ODOR STUDY

Western Placer Waste Management Authority
Roseville, CA

Odor Assessment

Report

Revision 4

November 2015

Prepared by

Thomas R. Card, PE
Environmental Management Consulting
41125 278th Way SE, Enumclaw, WA 98022 USA
360-802-5540 Fax:360-802-5541
E-Mail:trcard@earthlink.net

Charles E. Schmidt, PhD
19200 Live Oak Road, Red Bluff, CA 96080
530-529-4256 Fax:530-529-4878

Table of Contents

1. INTRODUCTION 1

Site Location 1
Objectives 1
Scope 2

2. SUMMARY 3

3. ODOR SAMPLING RESULTS 6

Process Description 7
Landfill Inactive Surfaces 8
Landfill Active Working Face 11
Materials Recovery Facility (MRF) 12
Greenwaste Composting Facility 13

4. DATA ANALYSIS 15

Inactive Landfill Surfaces 15
Landfill Active Working Face 15
Materials Recovery Facility (MRF) 16
Greenwaste Composting Facility 16

Figures

Figure 1.1 WPWMA Location Map.
Figure 2.1 Overall Contribution to Site Odor by Process (Emission Units in DT/Min)
Figure 4.1 WPWMA Process Locations.
Figure 4.2 Sampled Grid Cells.
Figure 5.1 Interpolated Windrow Compost Emission Curve.

Tables

Table 1.1 Summary of Flux Chamber Testing at the WPWMA Facility (Active LF working face, Inactive LF working face, MRF, and Windrow compost facility).
Table 4.1 Summary of Landfill Gas Survey Data Since 2012 (Sampled Cells Highlighted).
Table 4.2 Portion of each Grid Cell Sampled Represented by the Methane Instantaneous Screening Ranges (internal spatial representation of grid cells tested).
Table 4.3 Sampling Results for Grid Cells (Odor Flux, DT/min-m2).
Table 4.4 Measured Odor Flux Values from the Active Working Face.
Table 4.5 Sampling Results for the MRF Odor Sources.
Table 4.6 Summary of Compost Facility Sampling Results.
Table 5.1 Calculated total emissions (DT/min) for each measured cell.
Table 5.2 Calculated total Emissions from Landfill Inactive Surfaces.
Table 5.3 Summary of Landfill Active Working Face Odor Emissions.
Table 5.4 Summary of MRF Odor Emissions.
Table 5.5. Summary of Compost Emissions.

Attachments

1. Data Validation Technical Memorandum
    a. Field Data Sheets
    b. Chain of Custody Sheets
    c. Laboratory Reports
2. Sampling Plan

1. Introduction

Site Location

The test site, Western Placer Waste Management Authority (WPWMA) facility is located in Roseville, California. The site includes a municipal solid waste (MSW) landfill, a Materials Recovery Facility (MRF), and a green waste composting facility.

Figure 1.1 –WPWMA Location Map.

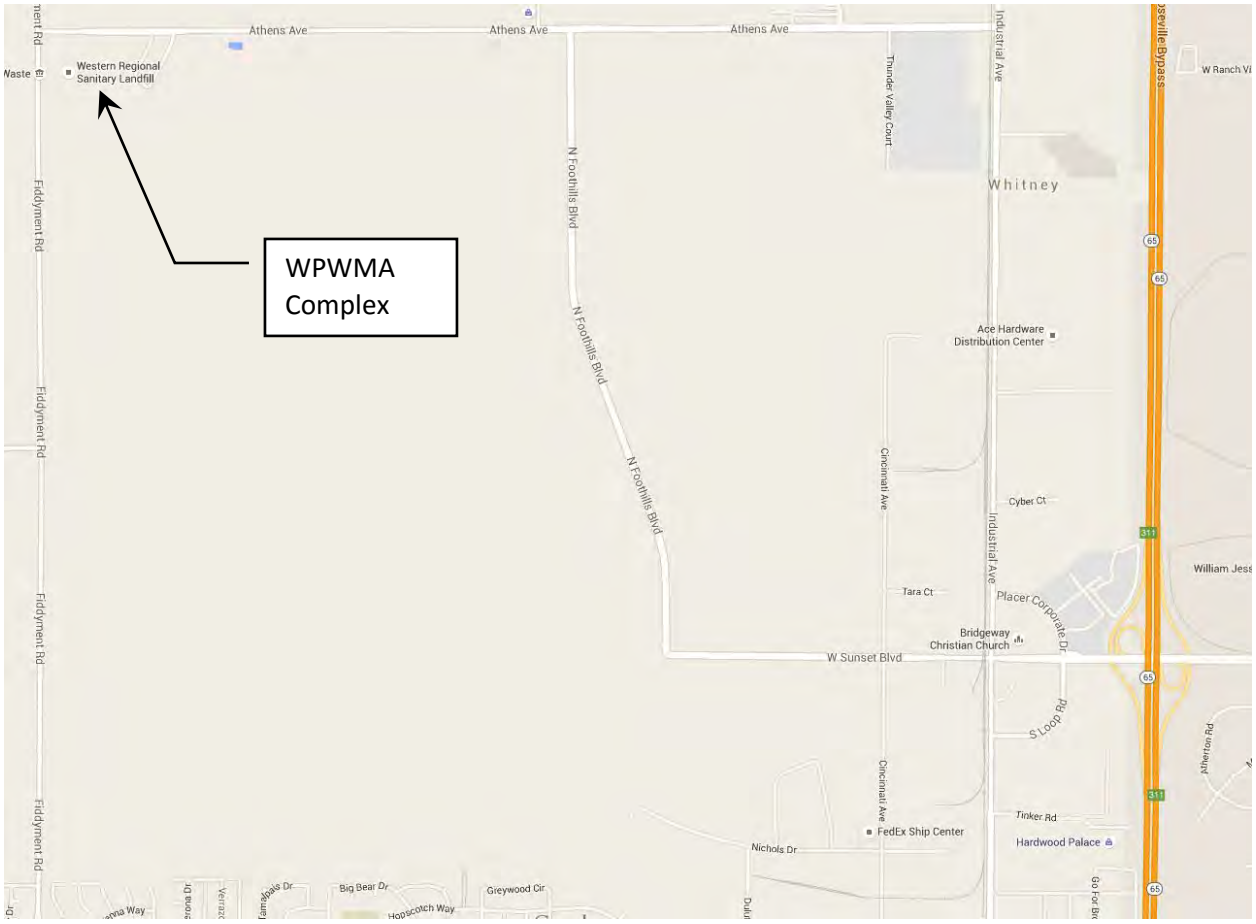

Objectives

The project objective of the Odor Assessment was to quantify surface odor emissions from the active landfill face, inactive landfill surface, the MRF, and the green waste compost facility. These sources are considered all major odor emission sources from this facility and the report for these sources is intended to be comprehensive. The primary specific objectives included:

1) Perform an odor source assessment/evaluation of key odor emitting sources on site,
2) Generate odor emission factors for odor sources,

3) Provide data that can be used to enhance the existing Odowatch® monitoring system for the purpose of providing more representative and accurate predictions (real-time) of off-site odor impacts to the surrounding areas, and
4) Coordinate with Odotech to integrate the resulting data into the WPWMA's Odowatch® monitoring system.

Scope

The project assessment includes four tasks:

1. quantifying the odor emissions from the landfill active face, including recently covered refuse;
2. quantifying the odor emissions from the landfill inactive surface;
3. quantifying the odor emissions from the MRF; and
4. quantifying the odor emissions from the windrow compost facility.

A summary of the scope per task is provided in Table 1-1. Samples were collected following the methodology and protocols identified in the Sampling Plan.

Sampling and analysis included the following methods.

- **Direct Odor Flux Chamber Measurements-** Odor samples were collected using a flux chamber conforming to EPA-approved design parameters and sampling methodologies (see Ref 1). Odorous air samples were collected and shipped overnight express, for next day laboratory analysis. Screening was also performed using a real-time instrument for hydrogen sulfide (H2S) and colorimetric detector tubes for ammonia.

- **Olfactometry** – Odor concentration by olfactometry (ASTM E-679, see Ref 2) using Odor Science and Engineering, Inc. odor panel analyses was completed to determine the magnitude of odor emissions from each source, to determine the relative offensiveness of odors from each source, and to provide input data for dispersion modeling. Odor panel analysis included odor concentrations expressed as dilutions to threshold (D/T), odor offensiveness as measured by hedonic tone, and odor character descriptors.

- **Advective Flow Assessment-** Advective flow from appropriate sources (e.g., compost piles) was determined using a trace gas (10% helium) in the flux chamber sweep air by collecting gas samples for analysis of residual helium by ASTM Method D-1945.

Table 1-1. Summary of Source Testing at WPWMA (Active LF working face, Inactive LF surfaces, MRF, and Green waste compost facility).

Test Condition	Flux Tests	Comments
Landfill Active Working Face and Interim Cover	12	Samples were collected over several days representing a spectrum of municipal waste and different ages of daily cover (no gas well installation).
Inactive Landfill Surfaces	20	One grid cell for the 'zero-detect' area and four grid cells for the methane detected area; four flux test per grid cell.
MRF	12	Source testing on waste piles, inside and outside of structure over several days.
Windrow Compost Site	40	Testing of green waste tipping pile, chop pile, 5-to-6 days in the compost cycle, cure pile, and finish pile.
Compost Leachate Pond	1	
Blank Test	6	Minimum 5%
Replicate Test	6	Minimum 5%
TOTAL SAMPLES	97	

2. Executive Summary

Key Findings and Recommendations

1. The composting operation shows very low odor for a green waste composting process as compared to industry average. Consequently, there are not many alternatives that for the classic windrow composting operations to improve site emissions from composting. However, odor from the composting processes dominates the odor from the site (see pie chart). In order to significantly reduce odor from composting, a new technology must be applied such as aerated static pile (ASP) composting. Recent test data have shown ASP technologies can reduce odor emissions by at least 80%, and employing one of several ASP technologies would likely decrease site odor by over 50%. The second largest composting source, the chop pile, should also see and emissions reduction if the size of the pile were reduced. Given that the compost cycle is greatly compressed with the ASP Technology, a proportional reduction in this source is also expected to be gained since there will be a much greater demand for chopped green waste in the process.

2. The materials recycling facility (MRF) shows low odor as compared to the industry standard for refuse sorting and processing. The contribution to site odor from the MRF is relatively minor. But, since the MRF is very close to the site border, operational practices (closing doors) that would further reduce odors from the MRF should be considered since odor sources nearest to the property fence line have a relatively greater effect on odors detected off site.

3. The active face of the landfill shows odors that are typical of municipal landfills, however two waste streams tested show relatively high odor in this small area of the site. The land filling of municipal wastewater biosolids has a very high contribution to the odor from the active face. In addition, the alternative daily cover (ADC) from the MRF also has high odor compared to the municipal refuse. Options for controlling odors from these sources, as well as best operational management practice, should reduce odors from the active face. Engineering options may need to be considered for reducing the odors from the biosolids such as temporary cover applications.

4. The inactive landfill was tested using the screening data for methane from the regulatory required monitoring program. High variability was observed in the in these data. This was likely related to operational changes experienced in the field related to the energy plant operations. In addition, some of the inactive landfill areas showed about twice normal odor emissions on a surface area basis. This is also likely related to the collection of landfill gas as controlled by the energy plant on site. It is important that the landfill gas collection system be operated in such a fashion that the fugitive emissions from the inactive, covered landfill (which is a huge surface area of the site) results in the minimum fugitive landfill gas emission. Note that it is likely that the conditions experienced during the testing on site reflects an upset condition, and it is recommended that a retest of the inactive landfill be conducted in order to generate more representative odor emissions from the inactive landfill surfaces.

Program Summary

All sampling took place during the week of August 17, 2015 and the following Monday, August 24, 2015. All sampling was completed per the attached Sampling Plan. All data taken is provided in the attached Data Validation Technical Memorandum.

The overall contribution to total site odor for each of the site processes is shown in Figure 2.1. Composting and the inactive landfill surfaces dominate the site odor, with composting being the largest contributor to site odor.

Figure 2.1 Overall Contribution to Site Odor by Process.

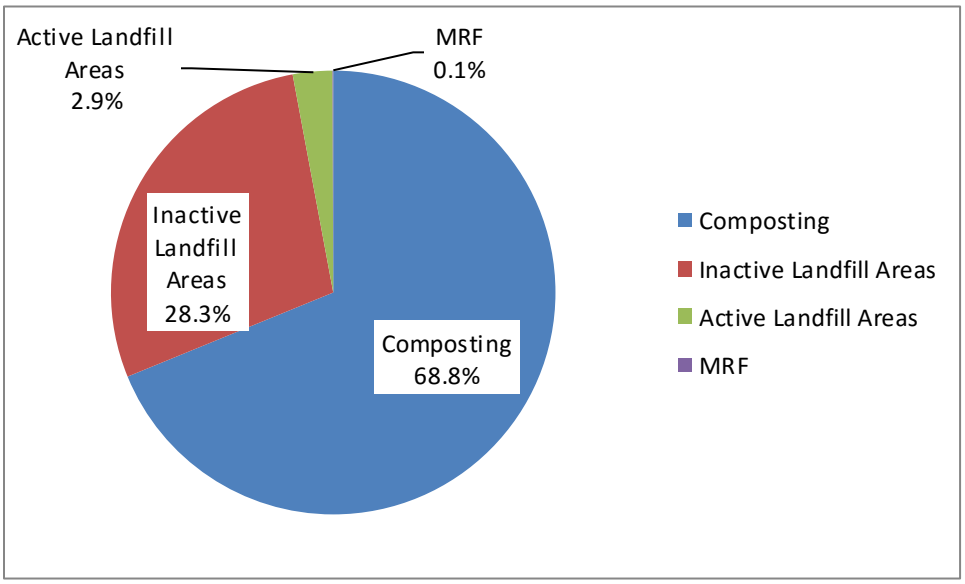

Table 2.1 presents a more detailed summary of sampling results. The windrow composting was the largest odor source on site. However, the composting operation was the lowest emitting composting source on a ton/day size basis, than any compost facility that we have recently tested (we have tested five similar facilities for odor in the last five years). This means that it is unlikely that any process changes to the windrow composting technology could lower the odor emission rate.

The next highest odor source on site are the inactive surfaces at the landfill. The estimate of the inactive surface emissions is driven predominantly by Grid Cell #39, that was anticipated to be low based on previous CARB screening, but turned out to be quite high. This grid cell may not be representative of all the low emitting cells. If not, then the estimate of the inactive landfill surfaces could be biased high by as much as a factor of 3. If Grid Cell #39 had the expected emissions, then the overall inactive surface emission value would be reduced to 700,000 DT/min instead of the measured 2,100,000 DT/min.

The remaining sources were very low, perhaps inconsequential. There were noticeable odors, from these sources, directly adjacent to these sources, but the odor from these sources was, in general, not detectable past the property lines.

The units in Table 2.1 are in DT/min. One DT/min is an odor emission rate approximately equal to 1 μg/min of hydrogen sulfide. If the site were vacant land, it would have an approximate emission rate of 650,000 DT/min.

Table 2.1 Summary of Sampling Results.

Source	Odor Emissions (DT/min)
Compost Tipping Pile	21,654
Compost Chop Pile	1,604,055
Compost Windrows	3,500,295
Compost Product	1,013
Ponds	31,126
Total	5,127,017
MRF Non-recycle Material	2,860
MRF Recycle Material	944
MRF ADC	199
Total	4,003
Open Face MSW	82,872
Open Face Biosolids	87,065
ADC on Landfill	33,249
Soil Cover on Landfll	10,963
Total	214,150
Inactive Landfill	2,105,365
Total Odor	7,481,661

3. Background on Odor Assessment Technology

Odors can be measured using both field and laboratory instruments. In the field, a scentometer is used (see Photo 3.1). This instrument is routinely used for odor regulation enforcement and can reliably measure odors down to 7.5 dilutions to threshold (DT). This means that the odor would require 7.5 cubic feet of odor free air to every 1 cubic foot of odorous air to render the result not-detectable by the average person.

Odor can also be measured in the laboratory using an olfactometer. A field sample is taken in a Tedlar® bag and shipped to a laboratory for analysis. The same units of measurement, dilutions to threshold (DT) are used for this. Photos 3.2 and 3.3 show the laboratory olfactometer and the odor bag sample.

When an odor sample is taken from a USPEA flux chamber (see photo 3.4) the odor source strength for a facility can be quantified. After a source has been quantified, the offsite impacts can be predicted using USEPA-approved dispersion models.

For this project, odor assessment included flux chamber testing, collection of gas samples in Tedlar bags, and off site analysis by the laboratory. Rather than ambient air testing using a scentometer, off site odor will be predicted by dispersion modeling. The advantage to this assessment approach is that the source assessment using the flux chamber provided valuable on site source apportionment data that is useful for diagnosing and remediating process odors, and these flux data are also used to develop odor emission factors which provide quantitative input to dispersion modeling that can be used to describe off site odors.

Photo 3.1 A Nasal Ranger® Scentometer.

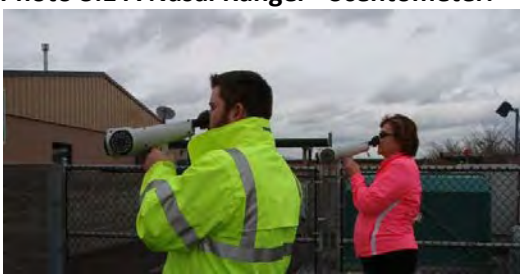

Photo 3.2 Laboratory Olfactometer

Photo 3.3 Odor Sample in Tedlar® Bag

Photo 3.4 USEPA Flux Chamber

4. Odor Sampling Results

All sampling took place during the week of August 17, 2015 and the following Monday, August 24, 2015. All sampling was completed per the attached Sampling Plan. All data taken is provided in the attached Data Validation Technical Memorandum.

Process Description

The WPWMA Complex includes a Materials Recovery Facility (MRF), windrow composting, and a landfill. The location of these activities is shown in Figure 4.1. The site is approximately one-mile-long and 0.5 mile wide.

Figure 4.1 – WPWMA Process Locations.

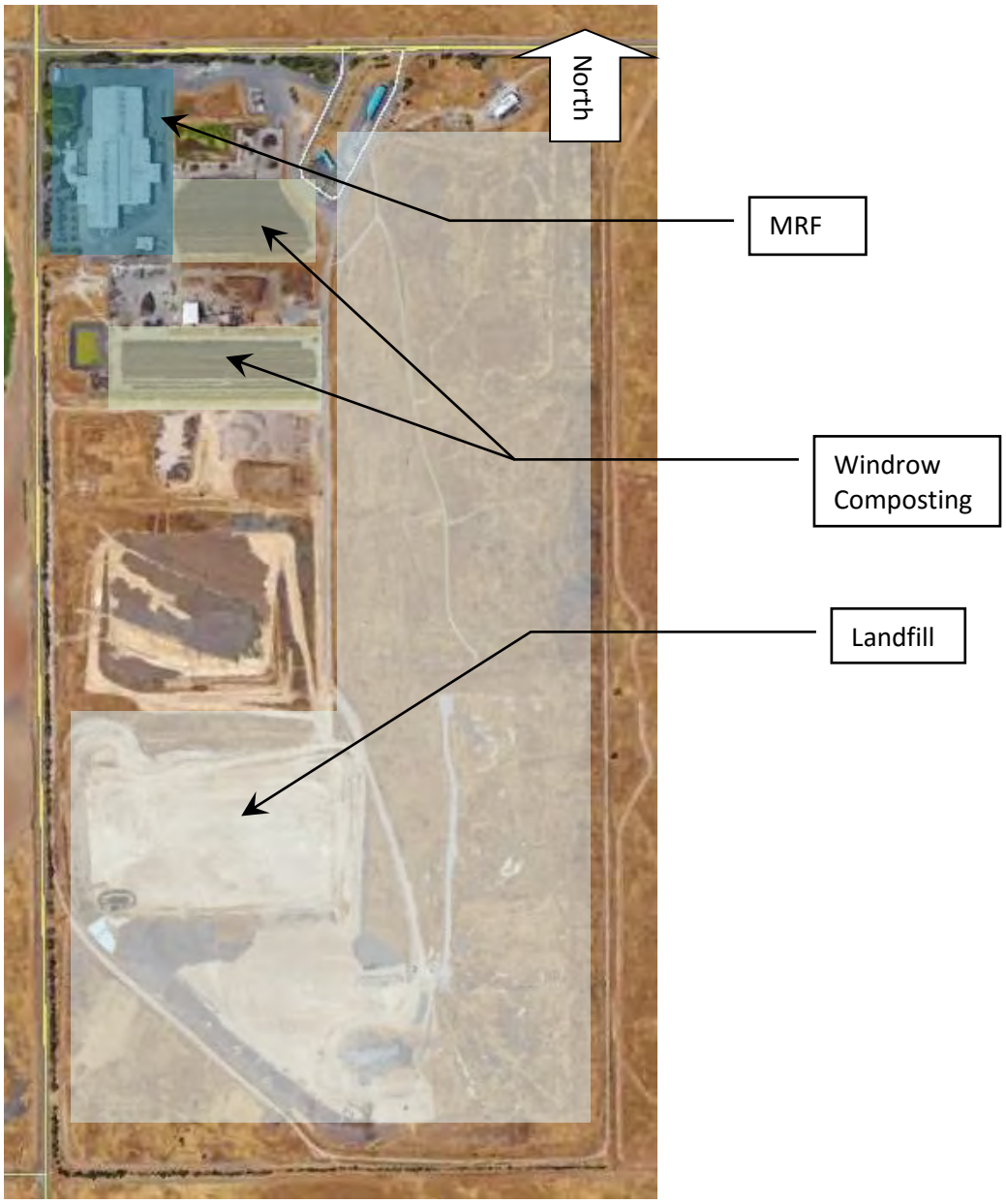

Landfill Inactive Surfaces

Sample locations were selected based on the analysis of the annual/quarterly landfill gas screening data for methane emissions (integrated grid cell methane concentration data) that has been collected per the California Air Resources Board protocol (**Implementation Guidance Document for The Regulation To Reduce Methane Emissions From Municipal Solid Waste Landfills**). Methane screening data from 2012 to current was used as a surrogate for odor emissions. The CARB protocol is based on dividing the landfill into 50,000 ft^2 grid cells. Based on the analysis of the quarterly methane monitoring data, for the grid cells that are accessible and included in survey, all regularly monitored site grid cells have been placed into three groups, representing the highest emitting cells, lowest emitting cells, and the cells in between (see Table 4.1). Within these three groups, the grid cells have been ranked based on integrated methane grid data as shown, and one grid cell per group has been selected, on a methane emitted mass basis, to represent the group. The grid cell that represented the average methane emission for the group was selected as the primary target for sampling (see Table 4.1 for calculation). If that target grid cell was unavailable for testing, or not representative on the day of the test, then the grid cell closest to the average was selected.

In addition, a grid cell with no methane detection was selected to represent the 36 grid cells were no methane has been detected.

The technical approach for assessing the inactive landfill surface where historic methane emissions are used to represent current methane and odor emissions as a surrogate for odor, assumes that the operation of the landfill gas collection system is similar to the time of testing. Since operational changes in the landfill gas collection system were experienced prior to testing, it is likely that variation in landfill gas emissions compared to historic landfill operations resulted in additional variability in methane and odor emissions. This does not weaken the analysis per se, but it does add to variability in the measured data set and assumptions used in the calculation of inactive landfill gas odor emissions.

Although we had back-up grid cells selected for each test cell identified by the process described above, as shown in the data, divergence was found, in particular, with grid cell 39. The results found with this cell showed that the odor flux was actually the second highest cell tested where the historic methane data placed it in the low category of grid cells. Unfortunately, since the screening data collected for methane was also highly variable during the testing, there was no clear indication that an alternative grid cell should be used to represent this category. Regardless, the measured odor flux data were used to generate representative odor flux from the inactive landfill surface accounting for the observed variability in the data.

A summary of the tested grid cells is shown in Figure 4.2 and is given below:

Potential High Range Emitting: 129
Potential Mid-Range Emitting: 106, 104
Potential Low Range Emitting: 39
Zero-detect: 52

Figure 4.2 Sampled Grid Cells.

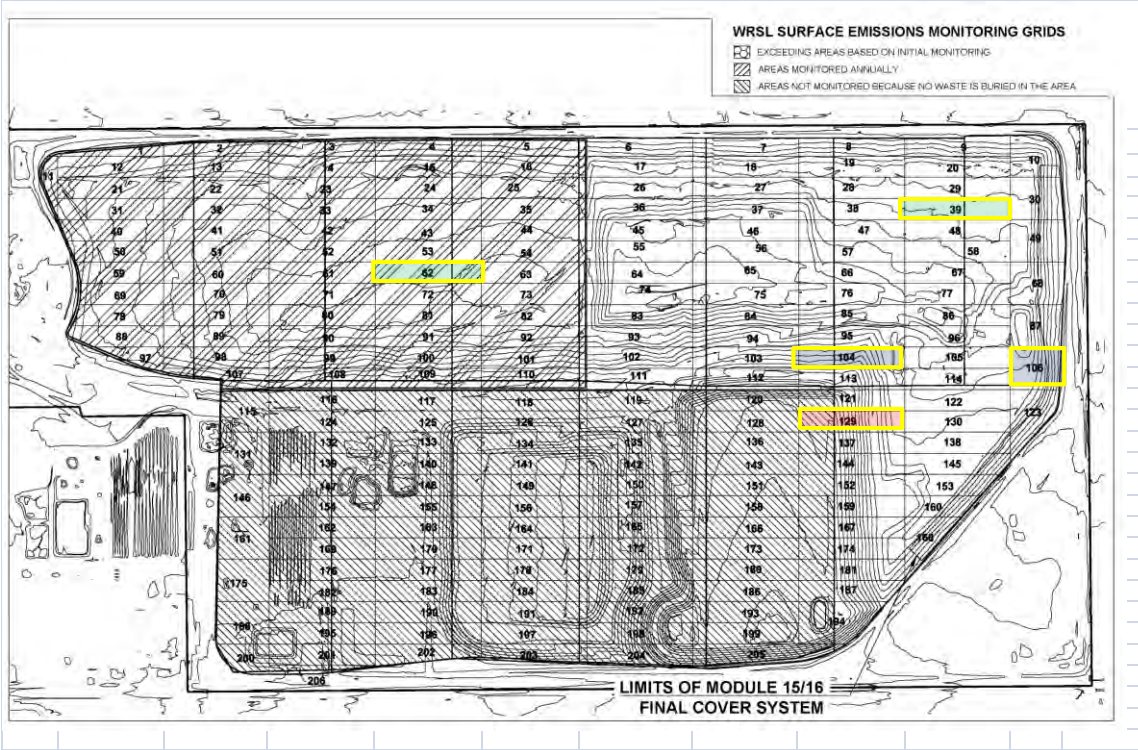

Table 4.1 Summary of Landfill Gas Survey Data Since 2012 (Sampled Cells Highlighted).

Index	Cell#	Average	StDev	Cumulative Sum	% of Total
1	123	39.10	28.27	39.10	5.8%
2	130	36.31	40.67	75.41	11.1%
3	145	35.39	38.60	110.80	16.4%
4	129	33.14	42.00	143.94	21.3%
5	138	30.83	34.67	174.77	25.8%
6	121	30.00	28.48	204.77	30.3%
7	122	28.47	21.34	233.24	34.5%
8	194	26.06	26.34	259.30	38.3%
9	113	24.06	24.55	283.36	41.9%
10	106	22.63	11.94	305.98	45.2%
11	114	20.43	9.71	326.41	48.2%
12	104	19.82	15.61	346.23	51.2%
13	153	19.57	21.41	365.81	54.1%
14	96	16.36	15.62	382.17	56.5%
15	137	15.07	13.52	397.24	58.7%
16	87	14.73	11.81	411.97	60.9%
17	144	14.73	14.42	426.70	63.1%
18	105	12.71	5.59	439.42	64.9%
19	152	12.00	11.53	451.42	66.7%
20	160	11.33	14.76	462.75	68.4%
21	159	11.25	15.73	474.00	70.1%
22	95	10.85	8.63	484.85	71.7%
23	174	8.92	10.65	493.76	73.0%
24	167	8.83	7.71	502.60	74.3%
25	168	8.18	7.72	510.78	75.5%
26	48	7.00	6.11	517.78	76.5%
27	58	6.77	7.36	524.55	77.5%
28	77	6.23	6.26	530.78	78.4%
29	86	6.17	6.13	536.94	79.4%
30	68	6.00	4.69	542.94	80.2%
31	181	6.00	6.03	548.94	81.1%
32	9	5.62	4.82	554.56	82.0%
33	39	5.62	4.74	560.17	82.8%
34	67	5.46	5.70	565.64	83.6%
35	20	4.62	5.08	570.25	84.3%
36	8	4.43	9.88	574.68	84.9%
37	29	4.23	5.85	578.91	85.6%
38	187	4.00	4.84	582.91	86.2%
39	84	3.77	6.23	586.68	86.7%
40	85	3.69	3.61	590.37	87.3%
41	103	3.62	3.80	593.99	87.8%
42	111	3.54	4.22	597.53	88.3%
43	102	3.15	4.54	600.68	88.8%
44	112	3.15	4.14	603.83	89.2%
45	49	3.00	3.00	606.83	89.7%
46	66	2.92	4.21	609.76	90.1%
47	10	2.77	3.00	612.53	90.5%
48	37	2.77	4.19	615.30	90.9%
49	94	2.69	3.30	617.99	91.3%
50	47	2.62	3.50	620.60	91.7%
51	46	2.54	3.02	623.14	92.1%
52	93	2.54	4.89	625.68	92.5%
53	19	2.46	4.07	628.14	92.8%
54	83	2.46	5.95	630.60	93.2%
55	92	2.33	4.04	632.94	93.5%
56	76	2.15	2.76	635.09	93.9%
57	57	2.08	2.93	637.17	94.2%
58	38	2.00	2.83	639.17	94.5%
59	78	2.00	3.46	641.17	94.8%
60	88	2.00	3.46	643.17	95.1%
61	89	2.00	3.46	645.17	95.4%
62	90	2.00	3.46	647.17	95.6%
63	91	2.00	3.46	649.17	95.9%
64	30	1.92	2.72	651.09	96.2%
65	55	1.62	2.02	652.71	96.5%
66	56	1.54	2.54	654.24	96.7%
67	28	1.31	2.46	655.55	96.9%
68	65	1.23	2.45	656.78	97.1%
69	6	1.15	1.46	657.94	97.2%
70	27	1.15	2.73	659.09	97.4%
71	79	1.00	1.73	660.09	97.6%
72	97	1.00	1.73	661.09	97.7%
73	107	1.00	1.73	662.09	97.9%
74	109	1.00	1.73	663.09	98.0%
75	110	1.00	1.73	664.09	98.2%
76	7	0.92	1.38	665.01	98.3%
77	75	0.92	1.32	665.94	98.4%
78	45	0.85	1.57	666.78	98.5%
79	64	0.85	1.72	667.63	98.7%
80	36	0.77	1.17	668.40	98.8%
81	17	0.69	1.70	669.09	98.9%
82	26	0.69	1.49	669.78	99.0%
83	74	0.69	0.85	670.48	99.1%
84	42	0.67	1.15	671.14	99.2%
85	98	0.67	1.15	671.81	99.3%
86	99	0.67	1.15	672.48	99.4%
87	108	0.67	1.15	673.14	99.5%
88	18	0.46	0.78	673.60	99.6%
89	3	0.33	0.58	673.94	99.6%
90	11	0.33	0.58	674.27	99.7%
91	12	0.33	0.58	674.60	99.7%
92	21	0.33	0.58	674.94	99.8%
93	50	0.33	0.58	675.27	99.8%
94	51	0.33	0.58	675.60	99.9%
95	53	0.33	0.58	675.94	99.9%
96	100	0.33	0.58	676.27	100.0%
97	101	0.33	0.58	676.60	100.0%
98	1	0.00	0.00	676.60	100.0%
99	2	0.00	0.00	676.60	100.0%
100	4	0.00	0.00	676.60	100.0%
101	5	0.00	0.00	676.60	100.0%
102	13	0.00	0.00	676.60	100.0%
103	14	0.00	0.00	676.60	100.0%
104	15	0.00	0.00	676.60	100.0%
105	16	0.00	0.00	676.60	100.0%
106	22	0.00	0.00	676.60	100.0%
107	23	0.00	0.00	676.60	100.0%
108	24	0.00	0.00	676.60	100.0%
109	25	0.00	0.00	676.60	100.0%
110	31	0.00	0.00	676.60	100.0%
111	32	0.00	0.00	676.60	100.0%
112	33	0.00	0.00	676.60	100.0%
113	34	0.00	0.00	676.60	100.0%
114	35	0.00	0.00	676.60	100.0%
115	40	0.00	0.00	676.60	100.0%
116	41	0.00	0.00	676.60	100.0%
117	43	0.00	0.00	676.60	100.0%
118	44	0.00	0.00	676.60	100.0%
119	52	0.00	0.00	676.60	100.0%
120	54	0.00	0.00	676.60	100.0%
121	59	0.00	0.00	676.60	100.0%
122	60	0.00	0.00	676.60	100.0%
123	61	0.00	0.00	676.60	100.0%
124	62	0.00	0.00	676.60	100.0%
125	63	0.00	0.00	676.60	100.0%
126	69	0.00	0.00	676.60	100.0%
127	70	0.00	0.00	676.60	100.0%
128	71	0.00	0.00	676.60	100.0%
129	72	0.00	0.00	676.60	100.0%
130	73	0.00	0.00	676.60	100.0%
131	80	0.00	0.00	676.60	100.0%
132	81	0.00	0.00	676.60	100.0%
133	82	0.00	0.00	676.60	100.0%

Within each grid cell, the field screening instantaneous methane data on the day prior to, and the day of sampling, allocated the area in each grid cell as low, middle, and high. Table 4.2 shows the portion of area in these ranges for each grid cell. For example, for Grid Cell #104, 85% of the total grid cell area (50,000 ft2) was represented by the low instantaneous methane screening range.

Table 4.2 Portion of each Grid Cell Sampled Represented by the Methane Instantaneous Screening Ranges (internal spatial representation of grid cells tested).

Cell Category	Grid No.	Low	Mid	High	Highest
Non-detect Grid Cells	52	25.0%	25.0%	25.0%	25.000%
Low Grid Cells	39	75.0%	20.0%	10.0%	0.003%
Mid Grid Cells	106	85.0%	10.0%	5.0%	0.003%
Mid Grid Cells	104	50.0%	25.0%	25.0%	0.003%
High Grid Cells	129	40.0%	40.0%	20.0%	0.003%

Finally, Table 4.3 presents the measured odor flux for each of these regions in each of the grid cells.

Table 4.3 Sampling Results for Grid Cells (Odor Flux, DT/min-m2).

		Inter Cell Range Represented			
Cell Category	Grid No.	Low	Mid	High	Highest
Non-detect Grid Cells	52	0.50	0.50	0.62	0.62
Low Grid Cells	39	5.27	0.42	6.27	6.81
Mid Grid Cells	106	0.35	0.42	13.62	405.08
Mid Grid Cells	104	2.04	2.42	1.23	0.88
High Grid Cells	129	0.50	1.23	29.19	163.00

Note that in Table 4.3, the highest reading only represents a single point in the 50,000 ft2 grid cell and is therefore inconsequential to average grid emissions. The highest point was measured just to determine if there was odor breakthrough at any point on the grid surface.

Landfill Active Working Face

Five samples were taken from the active face (taken on two separate days) and one sample was taken from deposited biosolids. The sample values are presented in Table 4.4. The five measurements taken on two different days represent a normal variability of raw MSW on an active face. This source is typically highly variable, and the range of odor emissions observed on two different days and at five test locations is common to other active landfill surfaces tested at other sites.

The biosolids odor flux rate was about 50 times higher than the average MSW odor flux rate. This material, as demonstrated by the measured odor flux, is a significant contributor of active face odor emissions making the amount of this material or the surface area of this material disposed of at the active face of the landfill and key source of odor emissions. However, the active face as a source has been shown to contribute to only about 3% of the total site odor.

Table 4.4 Measured Odor Flux Values from the Active Working Face.

Source	Odor Flux DT/m2-min
Active Face	14.85
Active Face	22.88
Active Face	6.81
Active Face	6.81
Active Face	126.00
Average	35.47
Biosolids	1,863

Materials Recovery Facility (MRF)

Samples were taken from the various segregated materials in the MRF. Table 4.5 presents the sampling results. Based on these results, for MRF site odor analysis, all the combined solid waste values were averaged together and all the sorted recovered material were averaged together. The alternative daily cover was treated separately.

Table 4.5. Sampling Results for the MRF Odor Sources.

Source	Odor Flux (DT/min-m2)
Raw Commerical SW	4.81
Raw Commerical SW	4.08
Average	4.44
Raw Residential SW	4.08
Raw Residential SW	1.23
Raw Residential SW	1.58
Raw Residential SW	3.42
Average	2.58
Post-Sort SW	3.15
Post-Sort SW	3.15
Average	3.15
Plastics	0.88
Plastics	1.04
Average	0.96
Cardboard	1.23
Cardboard	0.88
Average	1.06
Alternative Daily Cover Material	6.81
Alternative Daily Cover Material	7.42
Average	7.12

Green Waste Composting Facility

Samples were taken from the feedstock pile, from active windrows at various stages (times) during the active composting process and from the finished product storage piles. The results are summarized in Table 4.6. Note the extreme variability of the chopped feedstock pile and the early compost cycle. In addition, mixing the compost rows resulted in the immediate lowering of emissions. Based on our experience emissions can either increase, decrease, or remain constant during mixing events. There currently is no hypothesis as to why the emissions decreased at this location. Our only comment is that highly aerobic compost material emissions are not very much affected by mixing. It is possible that the added aeration and the release of any gases in the interstitial spaces within the pile could result in lowering of the emissions after mixing.

Table 4.6. Summary of Compost Facility Sampling Results.

SOURCE	DAY	Odor	Helium	Helium	Total Flow	Total Flow	Odor Flux
		D/T	(%)	Dilution	(lpm)	(m3/min)	DT/m2,min-1
Tipping Pile	Newer	30	9.91	1.304	38	0.038	8.8
Tipping Pile	Newer	12	9.91	0.638	78	0.078	7.2
Tipping Pile	Older	13	9.86	0.688	72	0.072	7.2
Tipping Pile	Older	58	9.86	0.686	72	0.072	32.1
Chopped Feedstock Pile	Newer	210	9.91	0.73	68	0.068	110
Chopped Feedstock Pile	Newer	354	9.91	0.8	62	0.062	169
Chopped Feedstock Pile	Older	11,615	9.86	0.775	64	0.064	5,684
Chopped Feedstock Pile	Older	163	9.86	1.024	48	0.048	60
Pre-mix Compost Windrow	0	638	9.89	0.366	135	0.135	663
Pre-mix Compost Windrow	0	82	9.89	0.816	61	0.061	38
Compost Windrow	1	35	9.86	0.874	56	0.056	15
Compost Windrow	1	45	9.86	0.967	51	0.051	18
Compost Windrow	1	23	9.91	0.696	71	0.071	13
Compost Windrow	1	2,990	9.91	0.85	58	0.058	1,341
						Average	347
Compost Windrow	5	979	9.89	0.426	116	0.116	874
Compost Windrow	5	126	9.89	0.272	182	0.182	176
Compost Windrow	5	4,602	10.01	0.642	78	0.078	2,760
Compost Windrow	5	250	10.01	0.409	122	0.122	235
						Average	1,011
Post Mix Windrow	5, T=0	1,553	9.89	0.893	55	0.055	662
Post Mix Windrow	5, T=4 hr	1,066	9.89	1.332	37	0.037	304
Compost Windrow	15	9	9.89	1.437	34	0.034	2.4
Compost Windrow	15	693	9.89	1.684	29	0.029	156.5
Compost Windrow	15	38	10.01	2.437	21	0.021	6.0
						Average	55.0
Compost Windrow	32	137	9.89	2.022	24	0.024	25.8
Compost Windrow	32	23	9.86	1.105	45	0.045	7.9
Compost Windrow	32	32	9.89	2.232	22	0.022	5.5
Compost Windrow	32	41	9.86	2.979	17	0.017	5.2
						Average	11.1
Compost Windrow	81	15	9.91	1.531	32	0.032	3.7
Compost Windrow	81	11	9.91	2.355	21	0.021	1.8
Compost Windrow	81	16	9.86	2.06	24	0.024	2.9
Compost Windrow	81	29	9.86	2.089	24	0.024	5.3
						Average	3.4
Compost Windrow	98	32	10.01	1.465	34	0.034	8.4
Compost Windrow	98	69	10.01	1.494	34	0.034	17.8
Compost Windrow	98	32	9.89	2.118	23	0.023	5.7
Compost Windrow	98	35	9.89	1.385	36	0.036	9.6
						Average	10.4
Finished Product	Newer	23	9.86	1.761	28	0.028	5.0
Finished Product	Newer	23	9.86	1.801	27	0.027	4.8
Finished Product	Older	38	9.89	3.983	12	0.012	3.6
Finished Product	Older	35	9.89	3.399	15	0.015	3.9
						Average	4.3
South Pond	As is	82	NA	NA	5	0.005	3.2

5. Data Analysis

In general, total process emissions are calculated by multiplying the measured odor flux value by the area the flux sample represented. However, in this section, the specific calculation methodology will be discussed in detail.

Inactive Landfill Surfaces

Each sampled grid cell was screened to determine the area to be represented (Table 4.2) and the measured flux values for each cell category (Table 4.3). Table 5.1 shows the total odor emissions calculated in this manner for each measured cell. Each cell is nominally 4,673 m^2. For example Non-detect grid low = 4,673 m^2 x 0.5 DT/min*m^2 x 25% = 584 DT/min

Table 5.1 Calculated total emissions (DT/min) for each measured cell.

Cell Category	Grid No.	Low	Mid	High	Highest	Total
Non-detect Grid Cells	52	584	584	719	719	2,606
Low Grid Cells	39	18,467	395	2,930	1	21,793
Mid Grid Cells	106	1,375	198	3,181	57	4,811
Mid Grid Cells	104	4,763	2,831	1,438	0	9,031
Highest Grid Cells	129	935	2,301	27,283	23	30,540

Then, based on Table 5.1, the number of cells that each tested cell represented were calculated. The total emissions from landfill inactive surfaces are the sum of all these individual emission cell ranges. Note that the second highest emission category was the low range grid cell. The sampling results for this cell (39) were not what were anticipated based on the screening assessment. The anticipated results would produce an emission estimate that would be dramatically lower than the measured results. It is possible that temporary gas system transients may have affected these results. The gas system was shut down due to power outage during the week of testing.

Table 5.2 Calculated total Emissions from Landfill Inactive Surfaces.

Cell Category	Avg Flux (DT/min-m2)	Emissions (DT/min)	# of Cells	Total Emissions (DT/min)
Non-detect Grid Cells	0.56	2,606	36	93,817
Low Grid Cells	4.66	21,793	79	1,721,634
Mid Grid Cells	1.48	6,921	11	76,131
Highest Grid Cells	6.54	30,540	7	213,783
				2,105,365

The anticipated emission rate for the low grid cells (based on the analysis of the CARB screening data) would be about 4,000 DT/min. If this were true, the total emissions would be reduced to about 700,000 DT/min instead of the 2,100,000 DT/min

Landfill Active Working Face

The emissions from the landfill working face area were calculated by using average areas multiplied the average measured flux values. Table 5.3 presents a summary of these calculations. Note that even

though the biosolids on the active face is a very small surface area, because their unit flux rate is significantly larger than that of the other solid wastes being buried, the resulting emissions from the biosolids are significant.

Table 5.3 Summary of Landfill Active Working Face Odor Emissions.

	Odor Flux	Area		Emissions
Source	**(DT/min-m2)**	**(ft2)**	**(m2)**	**(DT/min)**
Open Face MSW	35.47	25,000	2,336	82,872
Open Face Biosolids	1,863	500	47	87,065
ADC on Landfill	7.12	50,000	4,673	33,249
Soil Cover on Landfll	0.59	200,000	18,692	10,963
Total				214,150

Materials Recovery Facility (MRF)

Table 5.4 shows the emission calculations for the MRF. These emissions are quite low as compared to other solid waste sorting facilities. As they are now, they represent an insignificant odor source compared to the other process odor sources on site.

Table 5.4 Summary of MRF Odor Emissions.

	Odor Flux	Area		Emissions
Source	**(DT/min-m2)**	**(ft2)**	**(m2)**	**(DT/min)**
MRF Non-recycle Material	3.19	9,600	897	2,860
MRF Recycle Material	1.01	10,000	935	944
MRF ADC	7.12	300	28	199
Total				4,003

Green Waste Composting Facility

Computing the emissions from the windrow composting first involve calculating and averaging the flux rate for the windrow composting process. The process is first simulated by interpolating the measured process life cycle or 'days' to estimate the emissions for the process days that were not measured. For example, of the 90 to 100 days it takes the compost to mature, six of those days were sampled with the remaining day's emissions were estimated by interpolation. Figure 5.1 shows this interpolated emissions curve. The data represented by this curve was integrated to determine that the average compost emission rate at 94.5 DT/min-m^2 for the windrow process life cycle. Therefore, the average emissions, for each compost windrow, over the compost life cycle, is 94.5 DT/min-m^2.

Note that the vast majority of the emissions occur early in the compost cycle.

Based on the dimensions of the compost windrow, we can calculate the fraction of compost surface area per m^2 of pad area. This calculation shows that the compost surface area is 96.1% of the pad area.

Using these data, Table 5.5 was generated showing the total emissions from the composting operations. The emissions are dominated by the windrows, with a significant contribution from the chop piles.

The facility processes about 50,008 tons per year. This provides a compost emission factor of 25,548 DT/min per ton/day. The industry average (based on limited data) is about 200,000 DT/min per ton/day. This means that this facility is about 8 times lower in odor production than the industry average. This is the lowest odor emission factor for any windrow compost facility that we tested.

Figure 5.1 Interpolated Windrow Compost Emission Curve.

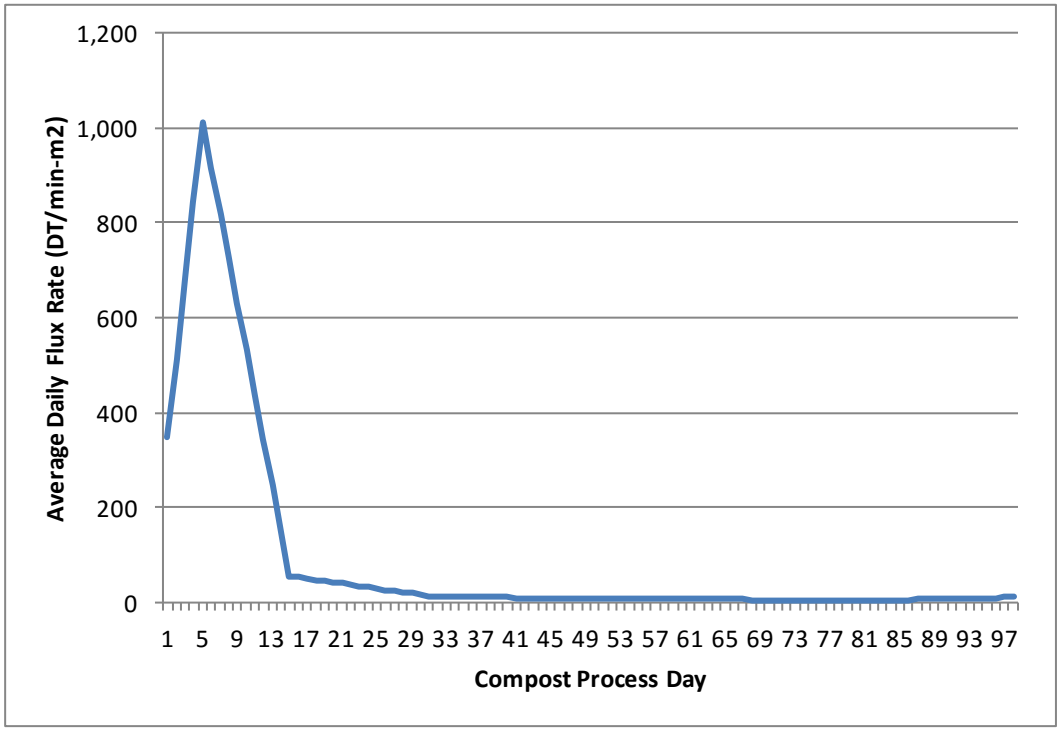

Table 5.5. Summary of Compost Emissions.

	Odor Flux	Area		Emissions
Source	**(DT/min-m2)**	**(ft2)**	**(m2)**	**(DT/min)**
Compost Tipping Pile	14	16,800	1,570	21,654
Compost Chop Pile	1,506	11,400	1,065	1,604,055
Compost Windrows	94	396,346	37,042	3,500,295
Compost Product	4	2,500	234	1,013
Ponds	3.15	105,600	9,869	31,126
Total				5,158,143

APPENDIX C:
COMPOST ODOR IMPACT MINIMIZATION PLAN

Odor Impact Minimization Plan

Western Placer Waste Management Authority

Compost Facility

Revisions:

July 2016

April 2018

Contents

Section Page

1 INTRODUCTION 1
Background 1

2 ODOR IMPACT MINIMIZATION PLAN 2
Odor Monitoring Protocol 2
Meteorological Conditions 4
Complaint Response Protocol 6
Design Considerations for Minimizing Odors 6
Operating Procedures for Minimizing Odors 9
Plan Revision 11

Table

1 Sources of Odor and Possible Management Techniques T-1

Appendices

A CIWMB Regulations regarding OIMP A-1
B Compost Odor Wheel B-1
C Historic Meteorological Information C-1

ODOR IMPACT MINIMIZATION PLAN
Compost Facility

1.0 INTRODUCTION

California Integrated Waste Management Board (CIWMB) regulations, Title 14, CCR Section 17863.4 require that all compostable material handling operations and facilities prepare and maintain a site-specific Odor Impact Minimization Plan (OIMP). The following OIMP has been developed to meet regulatory requirements and to serve as a documentation of site-specific operating procedures designed to minimize the potential for nuisance-level off-site odors.

1.1 BACKGROUND INFORMATION

Project Name:	Western Placer Waste Management Authority Green Material Compost Facility
Project Location:	3033 Fiddyment Road Roseville, CA 95747
Mailing Address:	11476 C Avenue Auburn, CA 95603
Landowner:	Western Placer Waste Management Authority 3033 Fiddyment Road Roseville, CA 95747
Project Contacts:	Eric Oddo, Program Manager Western Placer Waste Management Authority 11476 C Avenue Auburn, CA 95603 916-543-3984
Regulatory Contacts:	Paul Holloway, R.E.H.S Placer County Department of Health & Human Services Environmental Health Division 3091 County Center Drive, Suite 180 Auburn, CA 95603 530-745-2345

2.0 ODOR IMPACT MINIMIZATION PLAN

The following provides specific information on compliance with §17863.4 (b) – (d). The text from Title 14 is presented in *italics* followed by the Facility's proposed method of compliance.

(b) Odor impact minimization plans shall provide guidance to on-site personnel by describing, at a minimum, the following items. If the operator will not be implementing any of these procedures, the plan shall explain why it is not necessary.

2.1 ODOR MONITORING PROTOCOL

(1) an odor monitoring protocol which describes the proximity of possible odor receptors and a method for assessing odor impacts at the locations of the possible odor receptors; and

The closest receptors are WPWMA staff and the operators that work at the compost facility, buy-back facility, MRF, scalehouse, and landfill. On-site staff is the best source of real-time information regarding odors.

One mile south, southeast and southwest of the WRSL property boundary are residential developments referred to as Crocker Ranch and Fiddyment Farm; the composting facility is approximately .7 miles north of the WRSL property boundary. Both developments include residential housing and schools. These are the primary off-site receptors.

Other potential receptors not in the primary path of air movement but also of concern since the wind direction sometimes moves towards these locations in relation to the WPWMA's facilities are established residential neighborhoods approximately 2 miles north of the WPWMA and a casino approximately 1.5 miles to the northeast of the WPWMA. The majority of land within a close proximity of the WPWMA is designated as agriculture/pasture and no residential, commercial, or industrial developments exist, though some are being contemplated for the future.

There are a number of potentially competing odor sources within a reasonable vicinity of the composting facility as well. Approximately 2.5 miles southeast of the WPWMA's composting facility is a composting and soil blending facility (Mallard Creek). The Rio Bravo wood-burning power plant is located approximately 2 miles to the east. Both of these sources stockpile significant amounts of organic materials. These receptor locations are directly in the primary path of the air movement in relation to the WPWMA's compost facility. North of the WPWMA's

composting facility are a chicken farm and a dairy. The aforementioned casino, in addition to being a potential receptor, is also a potential odor source as the facility operates its own on-site wastewater treatment plant.

Approximately 1.5 miles to the east and southeast of the WPWMA are various industrial plants, including a propane dealer.

Please see Figure 1 to see the relationship of the facility to nearby receptors and competing odor sources.

As discussed above, there are a number of potential odor sources on the WPWMA site and in the vicinity:

<u>On-Site</u>
Western Regional Sanitary Landfill
C&D sort line
Material Recovery Facility
LFG to Energy plant (Energy 2001)
Composting Facility

<u>Off-Site</u>
Rio Bravo Wood waste to energy power plant facility
- 1.5 miles southeast of the WPWMA
- 0.35 miles northeast of Crocker Ranch;

Mallard Creek composting facility
- 1.75 miles southeast of the WPWMA
- 0.70 miles east of Crocker Ranch;

Placer Propane – propane dealer
- 1.75 miles southeast of the WPWMA
- 1.0 mile east of Crocker Ranch;

Invirotec –accepts and processes septage
- 1.5 miles northeast of the WPWMA
- 2.0 miles north-northeast of Crocker Ranch;

Thunder Valley Casino WWTP
- 1.5 miles to the east-northeast of the WPWMA
- 2.5 miles to the north-northeast of Crocker Ranch

Chicken farm
- 0.75 miles northwest of the northwestern corner of the WPWMA
- 2.4 miles north-northwest of Crocker Ranch;

Dairy farm
- 2.75 miles west-northwest of the northwestern corner of the WPWMA

- 3.6 miles northwest of Crocker Ranch.

The compost operator evaluates weather conditions, on-site odor conditions and planned operations to minimize the potential release of objectionable odors. These include good composting practices as described in the Report of Composting Site Information (RCSI) (appropriate C:N ratio, sufficient moisture content, adequate porosity, etc.) to minimize production and persistence of odors; and good housekeeping measures (like clearing spilled materials between piles, eliminating areas where water could pond, and maintaining reasonably sized stockpiles of feedstock and finished compost). Additional site-specific odor-minimization practices are detailed in Table 1.

If WPWMA or operator detects an objectionable on-site odor, they will follow the following protocol:

1. Investigate and determine the likely source of the odor.

2. Determine if on-site management practices could remedy the problem and immediately take steps to remedy the situation. Potential odor sources and likely management actions are shown in Table 1.

3. Determine whether or not the odor is traveling beyond the site by patrolling the site perimeter and noting existing wind conditions.

4. Enter observations in an odor log.

DESCRIPTION OF METEOROLOGICAL CONDITIONS

(2) a description of meteorological conditions effecting migration of odors and/or transport of odor causing material off-site. Seasonal variations affect wind velocity and direction shall also be described; and

The geographic proximity of the compost facility is classified as an Intermediate/Semi-Mediterranean climate. It is Mediterranean in the sense that there is a dry season and a wet season. The length of the “wet” and “dry” seasons can be highly variable. Typically rain falls between October and May, and is far less likely in June through September. Average yearly rainfall for the nearby town of Lincoln is 24.62 inches.

Summers are much like coastal Southern California, only slightly warmer, when "Delta" maritime breezes are present. Ocean breezes flow from the southwest to the northeast,

traveling up the Sacramento River delta. Because of the river delta and the absence of coastal mountains blocking ocean maritime breezes, cooling takes place during the normally hot summer months in the Sacramento Valley and Sierra Nevada Foothills. When Delta breezes aren't blowing and the winds come overland from the north, generally hot conditions prevail.

Winters are more characteristic of Oregon and Washington, with rain and fog, but with slightly warmer temperatures due to more southerly latitude. Winter storms can come from three different sources. The first and the most common is the North Pacific Storm which brings rain and fog to the coast, and then through the Sacramento River Delta and up into the foothills. The second type of winter storm comes from the Gulf of Alaska. These are much colder than the North Pacific Storms. The third type of winter storm comes from Canada and is rare. These are very cold and occur when storms manage to make it across Idaho, Montana and Nevada and the barrier mountains to the east, and can result in snowfall as low as the Sacramento Valley floor.

Historical wind directional data has been compiled for the area surrounding the WPWMA. Wind roses for the project area showing the wind speed and direction for each month with direction estimated as emanating from a particular direction are contained in Appendix D. The general direction of the wind during the winter months is to the south-southeast (from the north-northwest) and to the south-southwest (from the north-northeast) in the summer months.

With ambient air as the pathway, three different mechanisms may cause odors to migrate to the surrounding residential areas: inversion, diffusion, and advection.

Inversions are stable atmospheric conditions resulting in limited vertical air movement. Certain atmospheric conditions can cause a temperature inversion to occur, trapping odors near the ground. A temperature inversion is a situation where a warmer body of air is located above a colder air mass, inhibiting the vertical movement of gases. One situation in which a low level, or surface inversion, might take place is on a clear night, when the earth's surface radiates heat away rapidly. If the air is clear, the ground and the air directly above it can be cooler than the air at higher altitudes. In many cases, temperature inversions are most prevalent from the evening to the early morning, which could explain why odors are more prevalent at those times.

Diffusion is the process whereby compounds move from a region of higher concentration to one of a lower concentration. Diffusion could cause odors to be detected even upwind of the Compost Facility. Odors experienced when wind is coming from varying directions could be an indication of diffusion causing dispersion of odors.

The third pathway is *advection*. Odors can be carried long distances by the wind. Based upon review of meteorological data in the vicinity of the Compost Facility, the wind generally blows from the facility toward the residences, indicating that advection may contribute to the dispersion of odors to residential areas.

The facility has an on-site weather station to monitor wind speed and direction, temperature, and other meteorological functions. The on-site weather station is consulted prior to scheduling major material handling activities. Daily records are logged to generate site-specific historical weather pattern information.

COMPLAINT RESPONSE PROTOCOL

(3) a complaint response protocol; and

Facility management will use the following protocol in responding to citizen-reported odor notifications and complaints.

Response to Citizen Complaints

The WPWMA solicits feedback from the public regarding facility odors and provides an Odor Notification Form on its website so that residents can quickly and easily report any experienced odors.

Upon receipt of an odor notification, WPWMA staff will:

1. Check and record weather conditions (especially wind direction) at the time of the notification.

2. Visit the location of the compliant (when possible) and attempt to characterize the odor.

3. If the complainant location is downwind of the WPWMA facility, staff will contact the compost facility operator to verify the operating conditions and activities at the time of the complaint.

4. Staff will document all of the information gathered and potential source (s) of the odor in the Odor Complaint log.

5. Respond to the complainant within 24 hours of receiving the complaint, or within 24 hours of returning from weekends or holidays should the complaint be received during those times.

Upon receipt of a complaint or notification of a complaint by the WPWMA staff, the compost facility operator will:

1. Promptly provide information needed to assess the nature and source of the odor.

2. Consider implementing one or more of the management practices (if deemed feasible, given the time of year, particular source of the odor, etc.) listed in Table 1.

3. Monitor and adjust management practices and report results to WPWMA staff.

4.

DESIGN CONSIDERATIONS FOR MINIMIZING ODORS

(4) a description of design considerations and/or projected ranges of optimal operation to be employed in minimizing odor, including method and degree of aeration, moisture content of materials, feedstock characteristics, airborne emission production, process water distribution, pad and site drainage and permeability, equipment reliability, personnel training, weather event impacts, utility service interruptions, and site specific concerns; and

Method and Degree of Aeration

Green waste windrow composting aeration is largely a function of the particle size of the feedstock, the moisture content and the height of the pile; collectively this is often referred to as "porosity". ASP composting of food waste and other organics uses forced aeration via perforated pipes at the base of the piles that inject air into the piles eliminating the need for turning.

Moisture Content of Materials

Most of the material received consists of mainly woody material (shrubs, trees, bushes, etc.) with a small percentage of materials that have high moisture content, like grass clippings and food waste. It has historically been necessary to add significant amounts of water to maintain the minimum amount of moisture for effective composting.

Feedstock Characteristics

Windrow composting feedstock consists of green material, yard trimmings, and wood waste, as they are defined in 14 CCR §17852. ASP composting feedstock may include source

separated green waste, food waste, and mixed paper or a mix of these and other organic materials recovered from MRF sorting operations.

Airborne Emission Production

The main sources of dust and potential odor-carrying particles at the facility are from material handling, grinding, windrow turning, screening, and traffic. All access roads to the site are paved and properly maintained to minimize dust. Proper moisture management during the composting process also helps to prevent dust generation. Because of these measures, the storage and transfer of feedstock does not increase ambient levels of dust around the site. To the extent possible, dust generating-activities will be scheduled based on wind conditions.

Process Water Distribution

Process water is moved around the site using water trucks. In addition, the windrow turner is equipped with a mechanism to add water directly to the windrows as the piles are turned.

Pad and Site Drainage and Permeability

The MRF drainage system consists of ditches, berms, culverts, a stormwater detention basin and two compost leachate retention basins. With the exception of the compost leachate retention basins, the drainage system is designed to accommodate a 10-year, 12-hour storm per the requirements of the Placer County Stormwater Management Manual. The northern compost retention basin design is based on a 100-year, 24-hour storm event, with no discharge. The southern compost retention basin is designed based on a 500-year, 24-hour storm event, also with no discharge. All non-contact water from the MRF is directed to the stormwater detention basin for eventual discharge off-site. All contact water/leachate from the green and wood waste receiving, processing and storage area is directed to the northern compost retention basin.

The northern compost pad is paved and bisected by a drainage channel which drains the grinding pad and the compost pad into the north leachate pond.

Equipment Reliability

All equipment shall be maintained per manufacturer recommendations. The compost facility has an on-site back up windrow turner. The MRF has additional front-end loaders and manpower that could be directed to the composting operation in the event of an equipment failure.

Personnel Training

Personnel assigned to the compost facility have been trained in subjects applicable to the compost site operation and maintenance, load checking procedures, and heavy equipment operations. Monthly safety meetings occur on various topics to ensure proper and safe

procedures are followed. All heavy equipment operators must go through a training period before they are able to run each piece of machinery (loaders, roll-off, water truck, etc.). The training records and safety meeting attendance are kept on file.

Weather Event Impacts
Inversions are the most likely weather event to impact the facility (see discussion under Meteorological Conditions). Occasional severe rains could limit production at the compost site, but rarely last long enough to severely interrupt operations. The facility can be impacted by peak loads that can arrive after wet periods in the winter. As described in Table 1, the facility has developed contingency measures for these conditions.

The facility is equipped with a recording weather station and also has a prominently displayed windsock to direct on-site operations.

Utility Service Interruptions
Most mobile equipment is powered by diesel engines, with the exception of the horizontal grinder, which is electric. During an extensive outage a contract grinder could be brought in, though this would be an unlikely occurrence. Incoming green material could also be run across the adjacent C&D processing line, which also has an electric grinder.

Water Source
Potable water is available via on-site wells.

OPERATING PROCEDURES TO MINIMIZE ODOR
(5) a description of operating procedures for minimizing odor, including aeration, moisture management, feedstock quality, drainage controls, pad maintenance, wastewater pond controls, storage practices (e.g., storage time and pile geometry), contingency plans (i.e., equipment, water, power, and personnel) weather impacts, biofiltration, and tarping.

The Facility manages all odor-producing areas of the facility to minimize the development of conditions that could lead to odor problems. A key management tool in this effort is the use of a recording weather station and the windsock. Other possible management tools are summarized in Table 1.

Areas with the potential for odor generation include:

Feedstock Receiving Area. Incoming feedstocks can generate odors if they are stored for excessive periods of time, particularly during the rainy season. In order to minimize these potential odors, the Facility will process material regularly and within regulatory limits. Food waste feedstock is introduced into the ASP process immediately upon receipt. Odors from

incoming materials can also be generated upstream of the facility, depending on collection practices (e.g. most curbside greenwaste is collected every other week).

Aisles between Processing Areas. Aisles between processing areas and windrows can be sources of odor if raw, uncomposted, or improperly mixed material is left for excessive amounts of time without being exposed to the high temperatures of composting. The facility practices good housekeeping methods which include regular patrolling of all aisles to clean any spilled materials. Additionally, all surfaces from the receiving area through the composting pads have been designed and graded so that contact water moves efficiently into the leachate ponds, minimizing potential ponding in raw feedstock areas.

Composting Piles. Odors emanating from windrows typically indicate problems in the initial mixing, turning frequency, pile porosity, and/or moisture content of the pile. The operator strives to manage the windrows with appropriate carbon to nitrogen ratio, assure adequate initial mixing, and maintaining adequate moisture within the piles. Piles are turned every 2 to 3 days. Any odors detected from the windrows will be corrected using the techniques described in Table 1.

Odors from ASP are controlled via the biofilter layer consisting of finished compost overs applied over the piles as well as the introduction of air into the piles via perforated pipes.

Curing Piles. Curing piles have the potential to create odors if unstable material is moved to curing too soon. In order to minimize curing odors, the operator will ensure that material is adequately composted prior to moving it into the curing pile.

Storm Water Retention Basin/Compost Leachate Pond.
The compost leachate ponds could cause odors if they were overloaded with sediment or nutrients. The ponds are aerated allowing some volatile particles to be released in a controlled manner.

Aeration
Windrow composting relies on the particle size of the feedstock to allow for natural aeration. The spaces between the particles are referred to as porosity. A rough measure of porosity can be obtained by measuring bulk density. Piles are turned regularly which may help to reestablish porosity. The facility typically strives for a bulk density of 800 pounds per cubic yard in its initial piles.

ASP composting uses forced aeration via perforated pipes at the base of the piles that inject air, eliminating the need for turning.

Moisture Management
The majority of the feedstocks processed at the facility have relatively low moisture content. The site is adequately graded and paved to minimize ponding of water that could lead to odors.

Feedstock Quality
Windrow composting uses only clean, source separated green waste. As commercial hauling collection programs are relatively mature, contamination is relatively low. However, in some cases the frequency of collection can have an impact on odor generation. The operator will work with the green material haulers to identify loads which may have been left sitting for substantial time periods prior to collection and delivery to the facility. When possible these loads should be expedited to assure that they are processed in a timely manner and that the processed material is rapidly incorporated into a windrow.

ASP feedstock may include source separated food and green waste and/or a mixture of organic materials recovered from MRF processing operations. ASP feedstocks are generally more odiferous than the green-only windrow feedstock, thus they are not stored logner than necessary for incorporation into the ASP process and are covered with a biofilter upon pile formation.

Drainage Controls
As discussed above, the facility separates stormwater from "contact" water. Any water that contacts compost feedstock or active compost on the northern compost pad is directed to the central channel drain which bisects the pad and drains to the northern compost leachate pond. The drain could become a source of odors from entrapped sediment if not cleaned out regularly. Any water that contacts compost on the southern pad is directed to the southern compost leachate pond.

Pad Maintenance
The pads are maintained regularly on an as needed basis.

Wastewater Pond Controls
Regular maintenance of the stormwater and leachate ponds should minimize potential odors from these features. The leachate ponds are more likely to be a source of odors, though they are aerated regularly.

Storage Practices
Finished compost ready for sale is stockpiled at the north end of both the northern and southern compost pads and/or on a portion of the green/wood/C&D self-haul tipping area pad. Additionally, small bags of finished compost are manually bagged and marketed. On average, compost is stored for approximately ninety days with an anticipated maximum of six months. If

stored compost accumulates to the point of interference with operations and there is no other alternative, the excess will be used on-site for beneficial purposes or donated to member agencies of the WPWMA for use in parks or landscaping.

CONTINGENCY PLANS

The following provides information on contingency planning for facility equipment, water, power, personnel, weather impacts, and storage.

Equipment. All equipment is maintained per the manufacturer recommendations. The facility has a fulltime mechanic who does scheduled maintenance and repairs on the composting equipment. In the event of equipment breakdown, composting services can be contracted out or equipment could be rented to continue operations. The compost facility has an on-site back up turner and additional front-end loaders are also on-site as part of other operations.

Water. If needed, water could be brought in by tanker truck, but this is an unlikely situation. In the short term the facility could re-use water from either of the retention basins during periods when the regular water supply was interrupted.

Power. Most mobile equipment, except for the horizontal grinder, is powered by diesel engines. During the unlikely event of a prolonged power outage a contract grinder could be contracted to provide grinding services.

Personnel. Additional trained personnel could be made available from other Nortech operations.

Weather impacts. The only severe weather event impacts are heavy rainfall or high wind conditions that could temporarily impede processing activities.

Biofiltration. The windrow composting process may use a "pseudo-biofilter" or "compost blanket" to reduce odors in the initial windrows. This may include adding compost "overs" into the initial compost mix to increase porosity or may include using finished compost as a windrow blanket during the first few weeks. The ASP composting process utilizes a one-foot biofilter comprised of finished compost or compost overs on each pile.

Tarping. WPWMA may use tarps if necessary to assist with odor reduction of compost feedstock.

Storage. Given the current throughput, the facility is limited by the amount of available pad space. Under peak loading conditions, it may be desirable to re-direct processed green material to an off-site location rather than try to force a large throughput through the system. The

operator has identified the potential for off-site receiving locations, such as direct land application of green material.

PLAN REVISION

(c) The odor impact minimization plan shall be revised to reflect any changes, and a copy shall be provided to the enforcement agency, within 30 days of those changes.

A copy of this Odor Impact Minimization Plan will be kept at the facility's on-site administration office. The OIMP will be revised to reflect significant changes to operations that affect the OIMP.

TABLES

Table 1, describing sources of possible odor and potential management techniques, follows this page. The mitigation measures contained in Table 1 are not necessarily cumulative, i.e., not all measures will be implemented simultaneously. It will be up to the operator to determine the applicability of a given technique to a given situation.

Table 1
Sources of Odor and Possible Management Techniques

Source of Odor	Possible cause	Management approach
Feedstock receiving	Material sitting too long prior to processing	Reduce size of processed material stockpiles. Create discrete feedstock stockpiles with greater surface to volume ratio. Consider blanketing odiferous materials with one-foot layer of woody overs (water lightly to reduce odor releases).
Feedstock receiving	Material arrives with odors	Expedite material processing. Develop load-specific handling measures Consider blanketing odiferous materials with one-foot layer of woody overs (water lightly to reduce odor releases). Develop alternative processing option for odiferous loads. Consider treating odiferous loads with an odor neutralizer added to the water truck or otherwise sprayed on.
Material processing (Grinding)	Grinding volatizes particles	Expedite material processing. Increase operating shifts or grinder capacity. First in, first out, processing. Consider using odor neutralizer in the water spray for the grinder. Use the weather station, windsock, and/or operational experience to curtail grinding operations during unfavorable weather conditions.
Processed material storage	Storing processed materials for extended periods can cause odors.	Move processed material to a windrow within 48 hours. Stockpile woody overs for use in adjusting porosity and/or for blanketing material stockpiles and/or windrows.

Table 1 (Continued)
Sources of Odor and Possible Management Techniques

Source of Odor	Possible cause	Management approach
Material Handling (during composting)	Material handling releases odorous gases. Anaerobic conditions can form odorous compounds. Ammonia odor (high nitrogen level). Sulfur odor (anaerobic conditions). Varying odors in pile. Odors generated after turning. Excessive temperature.	Reduce handling activities during stagnant air conditions. Check and correct carbon to nitrogen ratio and porosity in windrows. Maintain adequate moisture in piles. Avoid over-watering piles. Increase turning frequency, check temperatures, check pH, increase porosity, increase additive. Increase surface to volume ratios of active piles. Consider using “Pseudo-biofilter” to reduce emissions.
Material Handling (Turning)	Turning releases odorous gases and volatizes particles	Reduce or avoid turning activities during stagnant weather conditions. Reduce turning activities when light winds are in the direction of sensitive receptors Consider adding an odor neutralizer to the water truck to be used as a topical odor neutralizer (after windrows are turned) and/or into the windrow via the turner.
Curing piles	Excessive temperatures	Decrease curing pile size (height). Increase compost residence time prior to moving to curing. Review moisture content of in-process compost. Use passive aeration to add oxygen to the curing pile

Table 1 (Continued)
Sources of Odor and Possible Management Techniques

Source of Odor	Possible cause	Management approach
Material processing (Screening)	Screening volatizes particles.	Reduce screening activity during stagnant air conditions. Reduce screening activity when wind is in direction of sensitive receptors. Mist water or neutralizer at dust generation points.
Aisles	Storm water allowed to pond Uncomposted material in aisles	Clean or sweep aisles of spilled material. (Particularly at the end of each day). Remove and replace woody overs and spilled materials from the pad on a regular basis. Mechanically sweep paved areas at the end of each day. Apply water and/or neutralizer to reduce dust conditions.
Drainage channel	Channel can become saturated and overloaded with sediment	Increase cleaning frequency of the drainage channel Install filter socks at the upstream end of the windrow pad, especially during the rainy season.
Leachate ponds	Standing water overloaded with nutrients or sediment	Install filter berm before ponds. Consider increasing aeration and/or chlorinating as necessary. Clean leachate ponds during the dry season.

Appendix A
CIWMB REGULATIONS REGARDING OIMPs

California Integrated Waste Management Board (CIWMB) regulations regarding Odor Impact Minimization Plans follow this page.

COMPOSTABLE MATERIALS HANDLING OPERATIONS AND FACILITIES REGULATORY REQUIREMENTS

April 4, 2003

Chapter 3.1 Compostable Materials Handling Operations and Facilities Regulatory Requirements

Article 1. General

Section 17863.4. Odor Impact Minimization Plan.

(a) All compostable material handling operations and facilities shall prepare, implement and maintain a site-specific odor impact minimization plan. A complete plan shall be submitted to the EA with the EA Notification or permit application.
(b) Odor impact minimization plans shall provide guidance to on-site operation personnel by describing, at a minimum, the following items. If the operator will not be implementing any of these procedures, the plan shall explain why it is not necessary.
(1) an odor monitoring protocol which describes the proximity of possible odor receptors and a method for assessing odor impacts at the locations of the possible odor receptors; and,
(2) a description of meteorological conditions effecting migration of odors and/or transport of odor-causing material off-site. Seasonal variations that effect wind velocity and direction shall also be described; and,
(3) a complaint response protocol; and,
(4) a description of design considerations and/or projected ranges of optimal operation to be employed in minimizing odor, including method and degree of aeration, moisture content of materials, feedstock characteristics, airborne emission production, process water distribution, pad and site drainage and permeability, equipment reliability, personnel training, weather event impacts, utility service interruptions, and site specific concerns; and,
(5) a description of operating procedures for minimizing odor, including aeration, moisture management, feedstock quality, drainage controls, pad maintenance, wastewater pond controls, storage practices (e.g., storage time and pile geometry), contingency plans (i.e., equipment, water, power, and personnel), biofiltration, and tarping.
© The odor impact minimization plan shall be revised to reflect any changes, and a copy shall be provided to the EA, within 30 days of those changes.
(d) The odor impact minimization plans shall be reviewed annually by the operator to determine if any revisions are necessary.
(e) The odor impact minimization plan shall be used by the EA to determine whether or not the operation or facility is following the procedures established by the operator. If the EA determines that the odor impact minimization plan is not being followed, EA may issue a Notice and Order (pursuant to section 18304) to require the operator to either comply with the odor impact minimization plan or to revise it.
(f) If the odor impact minimization plan is being followed, but odor impacts are still occurring, the EA may issue a Notice and Order (pursuant to section 18304) requiring the operator to take additional reasonable and feasible measures to minimize odors.

Authority cited: Sections 40502, 43020, 43021 and 43209.1 of the Public Resources Code
Reference: Sections 43020, 43021 and 43209.1 of the Public Resources Code.

Appendix B
COMPOST ODOR WHEEL

A Compost Odor Wheel, used to help determine the nature and therefore the cause of typical compost odors follows this page.

Appendix C
HISTORIC WIND INFORMATION

Historic wind speed and direction for the Compost Site follows this page.

APPENDIX D:
ODOR RISK FORECASTING TOOL

Odor Risk

Daily Risk

Site: Western Placer Waste Management Authority - Western Regional Sanitary Landfill

Report Issued: Aug 15, 2019 5:30 AM

Report Period: Shift starting Aug 14, 2019 6:00 PM

No Data | None | Low | Moderate | High | Extreme

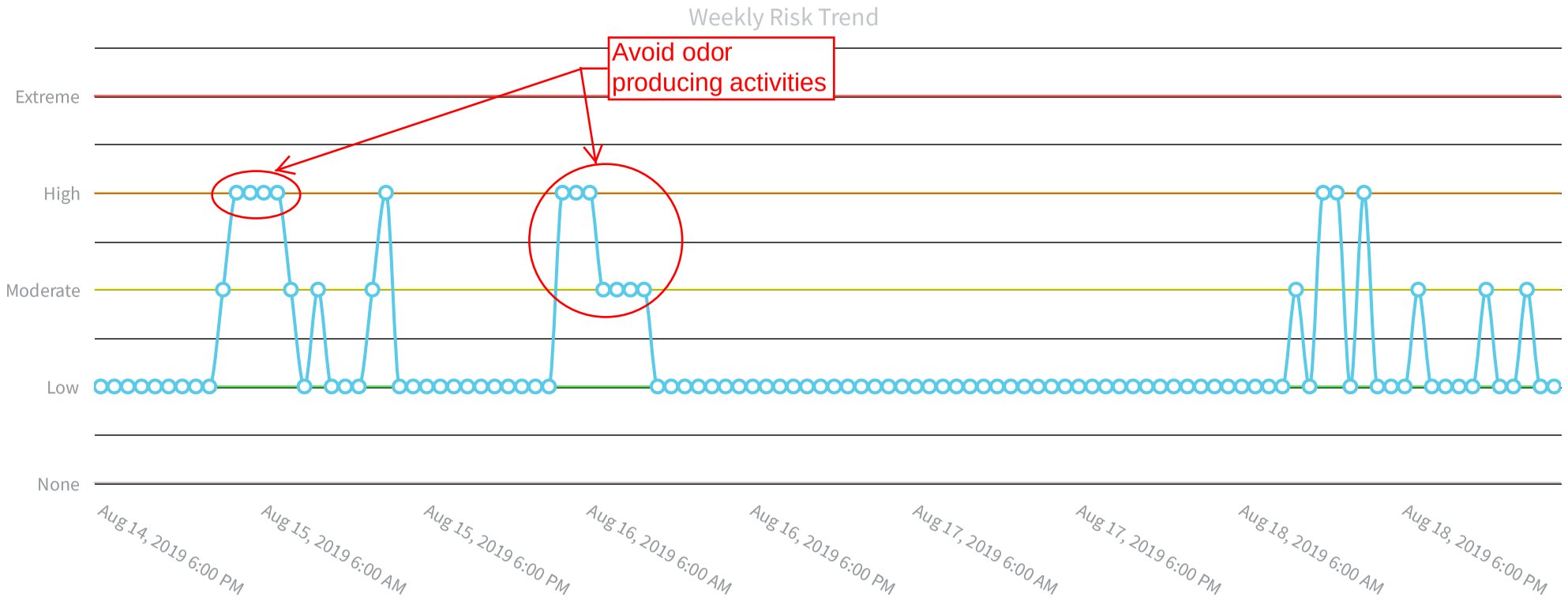

Night Shift - Wednesday

Aug 14, 2019 6:00 PM - Aug 15, 2019 6:00 AM

Hours	18 - 19	19 - 20	20 - 21	21 - 22	22 - 23	23 - 00	00 - 01	01 - 02	02 - 03	03 - 04	04 - 05	05 - 06
Risk	Low	Low	Low	Low	Low	Low	Low	Low	Low	Moderate	High	High
Wind Direction	SW	S	S	SE	SE	E	SE	SE	SE	E	N	N
Mixing Height (m)	46.96	23.27	23.20	26.24	46.70	130.58	123.59	86.62	34.33	22.43	44.33	22.20
Temperature (°F)	89.37	83.32	80.86	75.37	73.82	74.15	70.87	68.76	67.21	67.92	63.27	62.52
Wind Speed (mph)	4.91	3.84	3.26	5.66	6.48	8.60	6.89	5.31	5.56	1.49	5.27	5.07
Rainfall (mm)	--	--	--	--	--	--	--	--	--	--	--	--

Alerts

Wednesday 18:00 - Thursday 03:00: Low odor risk
Thursday 03:00 - 04:00: Low speed winds are causing a moderate odor risk
Thursday 04:00 - 06:00: High odor risk due to winds blowing towards town

Day Shift - Thursday

Aug 15, 2019 6:00 AM - Aug 15, 2019 6:00 PM

Hours	06 - 07	07 - 08	08 - 09	09 - 10	10 - 11	11 - 12	12 - 13	13 - 14	14 - 15	15 - 16	16 - 17	17 - 18
Risk	High	High	Moderate	Low	Moderate	Low	Low	Low	Moderate	High	Low	Low
Wind Direction	N	N	W	NW	W	W	W	W	NW	NW	W	W
Mixing Height (m)	32.09	47.37	99.42	214.96	320.04	442.11	496.21	579.25	678.45	810.26	536.20	99.33
Temperature (°F)	61.38	66.02	72.66	77.93	83.67	86.51	90.15	92.28	94.77	97.09	95.36	95.08
Wind Speed (mph)	3.73	3.01	2.71	4.69	2.95	6.15	5.11	5.21	2.80	2.45	7.07	4.28
Rainfall (mm)	--	--	--	--	--	--	--	--	--	--	--	--

Alerts

Thursday 06:00 - 08:00: High odor risk due to winds blowing towards town
Thursday 08:00 - 09:00: Low speed winds are causing a moderate odor risk
Thursday 09:00 - 10:00: Low odor risk
Thursday 10:00 - 11:00: Low speed winds are causing a moderate odor risk
Thursday 11:00 - 14:00: Low odor risk
Thursday 14:00 - 15:00: Low speed winds are causing a moderate odor risk
Thursday 15:00 - 16:00: High odor risk due to winds blowing towards town
Thursday 16:00 - 18:00: Low odor risk

Avoid odor producing activities due to 3 continuous hour period of "high" odor risk. (See previous page for start of "high" risk period.)

Night Shift - Thursday

Aug 15, 2019 6:00 PM - Aug 16, 2019 6:00 AM

Hours	18 - 19	19 - 20	20 - 21	21 - 22	22 - 23	23 - 00	00 - 01	01 - 02	02 - 03	03 - 04	04 - 05	05 - 06
Risk	Low	Low	Low	Low	Low	Low	Low	Low	Low	Low	High	High
Wind Direction	SW	S	SE	SE	SE	E	SE	S	SE	E	NE	N
Mixing Height (m)	49.23	23.28	23.11	55.71	86.33	185.50	129.77	89.84	40.97	22.47	45.88	22.35
Temperature (°F)	90.39	84.13	79.29	76.18	74.67	75.78	71.50	69.16	67.20	66.73	64.18	64.15
Wind Speed (mph)	4.40	3.62	4.72	7.20	6.95	10.73	6.48	5.95	5.59	4.57	6.36	5.80
Rainfall (mm)	--	--	--	--	--	--	--	--	--	--	--	--

Alerts

Thursday 18:00 - Friday 04:00: Low odor risk

Friday 04:00 - 06:00: High odor risk due to winds blowing towards town

Day Shift - Friday

Aug 16, 2019 6:00 AM - Aug 16, 2019 6:00 PM

Hours	06 - 07	07 - 08	08 - 09	09 - 10	10 - 11	11 - 12	12 - 13	13 - 14	14 - 15	15 - 16	16 - 17	17 - 18
Risk	High	Moderate	Moderate	Moderate	Moderate	Low	Low	Low	Low	Low	Low	Low
Wind Direction	N	SE	W	W	W	W	W	W	W	W	W	W
Mixing Height (m)	22.28	35.16	124.04	289.80	487.19	620.08	646.72	680.19	904.73	907.91	731.59	263.94
Temperature (°F)	63.94	67.81	74.40	79.39	83.80	86.26	90.51	92.47	94.73	95.52	94.18	92.88
Wind Speed (mph)	3.83	1.61	1.41	2.75	2.67	3.18	3.75	4.62	4.48	5.24	6.57	4.32
Rainfall (mm)	--	--	--	--	--	--	--	--	--	--	--	--

Alerts

Friday 06:00 - 07:00: High odor risk due to winds blowing towards town
Friday 07:00 - 11:00: Low speed winds are causing a moderate odor risk
Friday 11:00 - 18:00: Low odor risk

Avoid odor producing activities due to a 6 hour (or more) continuous time period of "moderate" (or worse) odor risk. (See previous page for start of "moderate" or worse risk period.)

Night Shift - Friday

Aug 16, 2019 6:00 PM - Aug 17, 2019 6:00 AM

Hours	18 - 19	19 - 20	20 - 21	21 - 22	22 - 23	23 - 00	00 - 01	01 - 02	02 - 03	03 - 04	04 - 05	05 - 06
Risk	Low	Low	Low	Low	Low	Low	Low	Low	Low	Low	Low	Low
Wind Direction	S	S	SE	SE	SE	SE	SE	S	S	SE	S	SE
Mixing Height (m)	50.84	71.92	150.53	135.85	155.54	222.49	168.87	172.71	290.21	165.28	137.52	77.39
Temperature (°F)	89.26	82.74	77.80	75.21	73.35	72.92	69.89	67.44	65.60	62.71	61.17	59.94
Wind Speed (mph)	4.15	5.02	4.06	7.58	9.15	10.84	10.10	10.43	11.25	5.55	6.16	3.58
Rainfall (mm)	--	--	--	--	--	--	--	--	--	--	--	--

Alerts

Friday 18:00 - Saturday 06:00: Low odor risk

Day Shift - Saturday

Aug 17, 2019 6:00 AM - Aug 17, 2019 6:00 PM

Hours	06 - 07	07 - 08	08 - 09	09 - 10	10 - 11	11 - 12	12 - 13	13 - 14	14 - 15	15 - 16	16 - 17	17 - 18
Risk	Low	Low	Low	Low	Low	Low	Low	Low	Low	Low	Low	Low
Wind Direction	S	S	S	SW	SW	S	S	S	SW	SW	SW	SW
Mixing Height (m)	95.84	71.66	205.62	457.26	691.83	793.17	926.64	994.66	1038.81	1031.80	890.86	419.16
Temperature (°F)	59.83	64.10	68.22	72.47	77.64	81.57	84.21	85.12	85.99	87.26	86.43	84.67
Wind Speed (mph)	4.43	5.20	6.67	3.94	3.04	8.03	8.17	11.98	7.81	7.12	7.36	8.94
Rainfall (mm)	--	--	--	--	--	--	--	--	--	--	--	--

Alerts

Saturday 06:00 - 18:00: Low odor risk

Night Shift - Saturday

Aug 17, 2019 6:00 PM - Aug 18, 2019 6:00 AM

Hours	18 - 19	19 - 20	20 - 21	21 - 22	22 - 23	23 - 00	00 - 01	01 - 02	02 - 03	03 - 04	04 - 05	05 - 06
Risk	Low	Low	Low	Low	Low	Low	Low	Low	Low	Low	Low	Low
Wind Direction	SW	SW	S	S	SE	S	SE	S	S	S	SE	SE
Mixing Height (m)	62.91	27.04	319.23	67.29	339.14	410.00	439.97	368.24	378.23	195.34	149.25	49.74
Temperature (°F)	80.62	76.08	73.13	68.56	66.93	62.40	60.32	59.19	58.82	58.58	59.30	59.92
Wind Speed (mph)	8.27	10.10	13.06	9.14	7.60	14.52	12.32	10.31	9.94	11.59	7.77	4.36
Rainfall (mm)	--	--	--	--	--	--	--	--	--	--	--	--

Alerts

Saturday 18:00 - Sunday 06:00: Low odor risk

Day Shift - Sunday

Aug 18, 2019 6:00 AM - Aug 18, 2019 6:00 PM

Hours	06 - 07	07 - 08	08 - 09	09 - 10	10 - 11	11 - 12	12 - 13	13 - 14	14 - 15	15 - 16	16 - 17	17 - 18
Risk	Low	Low	Low	Low	Moderate	Low	High	High	Low	High	Low	Low
Wind Direction	SE	S	S	S	SW	NW	NW	NW	W	NW	W	NW
Mixing Height (m)	255.35	287.72	495.73	532.39	769.66	929.97	925.92	903.57	846.37	955.45	950.34	819.55
Temperature (°F)	58.29	60.63	63.29	64.93	69.80	73.26	75.63	77.16	79.58	80.48	80.63	80.59
Wind Speed (mph)	4.51	3.37	4.15	3.41	1.89	5.38	4.46	7.66	5.18	8.34	4.99	4.74
Rainfall (mm)	--	--	--	--	--	--	--	--	--	--	--	--

Alerts

Sunday 06:00 - 10:00: Low odor risk
Sunday 10:00 - 11:00: Low speed winds are causing a moderate odor risk
Sunday 11:00 - 12:00: Low odor risk
Sunday 12:00 - 14:00: High odor risk due to winds blowing towards town
Sunday 14:00 - 15:00: Low odor risk
Sunday 15:00 - 16:00: High odor risk due to winds blowing towards town
Sunday 16:00 - 18:00: Low odor risk

Night Shift - Sunday

Aug 18, 2019 6:00 PM - Aug 19, 2019 6:00 AM

Hours	18 - 19	19 - 20	20 - 21	21 - 22	22 - 23	23 - 00	00 - 01	01 - 02	02 - 03	03 - 04	04 - 05	05 - 06
Risk	Low	Moderate	Low	Low	Low	Low	Moderate	Low	Low	Moderate	Low	Low
Wind Direction	SW	W	SW	S	SE	SE	S	SW	SW	SE	S	--
Mixing Height (m)	68.73	60.55	232.63	191.73	200.07	240.66	22.28	89.46	120.59	86.33	113.56	--
Temperature (°F)	78.16	74.03	71.67	68.72	66.33	63.17	63.42	61.15	59.77	59.15	57.89	--
Wind Speed (mph)	6.65	2.95	8.34	8.75	4.67	5.87	2.46	4.07	4.87	2.13	5.20	--
Rainfall (mm)	--	--	--	--	--	--	--	--	--	--	--	--

Alerts

Sunday 18:00 - 19:00: Low odor risk
Sunday 19:00 - 20:00: Low speed winds are causing a moderate odor risk
Sunday 20:00 - Monday 00:00: Low odor risk
Monday 00:00 - 01:00: Low speed winds are causing a moderate odor risk
Monday 01:00 - 03:00: Low odor risk
Monday 03:00 - 04:00: Low speed winds are causing a moderate odor risk
Monday 04:00 - 05:00: Low odor risk

APPENDIX E:
ODOR INVESTIGATION SUMMARY REPORT TEMPLATE

On- and Off-Site Odor Monitoring Event Summary

Date		Prepared by:	
Observed weather conditions			

Off-Site Location Notes

Location	A: Fiddyment Farms Elementary		
Time		Noticeable Odor: Y / N	Odor Intensity: N/A 1 2 3 4 5
Notes:			
Location	B: Fiddyment Road and Settlers Ridge		
Time		Noticeable Odor: Y / N	Odor Intensity: N/A 1 2 3 4 5
Notes:			
Location	C: Mel Hamel Park		
Time		Noticeable Odor: Y / N	Odor Intensity: N/A 1 2 3 4 5
Notes:			
Location	D: Verrazona Drive and Vignolia Loop		
Time		Noticeable Odor: Y / N	Odor Intensity: N/A 1 2 3 4 5
Notes:			
Location	E: Leonard Davis Park		
Time		Noticeable Odor: Y / N	Odor Intensity: N/A 1 2 3 4 5
Notes:			
Location	F: Greywood Circle		
Time		Noticeable Odor: Y / N	Odor Intensity: N/A 1 2 3 4 5
Notes:			

On- and Off-Site Odor Monitoring Event Summary (continued)

Location	G: Blue Oaks Theatres		
Time		Noticeable Odor: Y / N	Odor Intensity: N/A 1 2 3 4 5
Notes:			
Location	H: Kathy Lund Park		
Time		Noticeable Odor: Y / N	Odor Intensity: N/A 1 2 3 4 5
Notes:			
Location	I: William Jessop University		
Time		Noticeable Odor: Y / N	Odor Intensity: N/A 1 2 3 4 5
Notes:			
Location	J: Whitney Highschool		
Time		Noticeable Odor: Y / N	Odor Intensity: N/A 1 2 3 4 5
Notes:			
Location	K: Kaiser Lincoln		
Time		Noticeable Odor: Y / N	Odor Intensity: N/A 1 2 3 4 5
Notes:			
Location	L: Pete Demas Park		
Time		Noticeable Odor: Y / N	Odor Intensity: N/A 1 2 3 4 5
Notes:			

Comparison of Field Observations to Odor Dispersion Model Estimates

Notes:

APPENDIX F:
LFG AND LEACHATE MANAGEMENT SOP

LANDFILL GAS and LEACHATE MANAGEMENT

STANDARD OPERATING PROCEDURES

This document identifies the procedures for conducting operations and maintenance of landfill gas collection and control systems at the Western Regional Sanitary Landfill in compliance with regulatory obligations in a timely and safe manner.

Version **DRAFT**

Date: July 2020

DRAFT

Table of Contents **Page #**

SECTION 1 Introduction 1-1
1.1 Goals 1-1
1.2 Site-Specific Variances 1-1
1.3 Procedures for Requesting Site-Specific SOP Variances 1-2
1.4 SOP Updates 1-2
1.5 Disclaimer 1-2

SECTION 2 General Information 2-3
2.1 Format of SOP 2-3
2.2 Health and Safety 2-3
2.3 Qualifications and General Requirements 2-3
2.3.1 Self-Performance of Work 2-3
2.3.2 Work by Trained and Certified Personnel 2-3
2.3.3 Skills and Knowledge 2-4
2.4 GCCS Emergencies 2-5
2.4.1 Notification to WPWMA Personnel 2-5
2.4.2 Regulatory Notification 2-5
2.4.3 Press/News Agencies 2-5
2.5 Contact Call Tree for GCCS Emergencies 2-5

SECTION 3 GCCS Operating Goals 3-1
3.1 Definitions 3-1
3.2 Vacuum Set Point 3-1
3.2.1 Goal of Vacuum Set Point 3-1
3.2.2 Changing the Vacuum Set Point 3-2
3.3 NSPS/EG Thresholds and WPWMA SOP Targets 3-2
3.4 Establishing Site-Specific Operating Limits 3-3
3.4.1 Management of Regulatory HOVs 3-3
3.4.2 Temporary Alternate Operating Limits 3-4
3.4.3 Permanent Alternate Operating Limits 3-4

SECTION 4 Wellfield Operation, Monitoring, and Tuning 4-1
4.1 Overview and General Principles 4-1
4.2 DATA TAGS 4-1
4.3 Identification of Wells and Probes Requiring Monitoring 4-2
4.4 Monitoring Equipment Minimum Standards 4-2
4.5 Monitoring Point Naming and Standard Comments 4-3
4.5.1 Calibration Reading IDs 4-3

4.5.2 Prime Mover Inlet and Outlet IDs 4-3
4.5.3 Inlet and Outlet of Each Blower IDs 4-3
4.5.4 Flame Arrestor Inlet and Outlet IDs 4-4
4.5.5 Greenhouse Gas Monitoring IDs 4-4
4.5.6 Replacement/Redrilled Wells 4-4
4.5.7 Allowable Comments 4-4
4.6 Vacuum Set Point and BLoWER/FLARE STATION Operation 4-5
4.7 Wellfield Component Integrity Checks 4-6
4.7.1 Survey Stakes or Poles 4-7
4.7.2 LFG Well and Collector Integrity 4-7
4.7.3 Valves and Condensate Management System Integrity 4-8
4.8 Wellfield Monitoring 4-8
4.8.1 Monitoring Schedule and Tuning Frequency 4-9
4.8.2 Conditions Required for Wellfield Monitoring 4-10
4.8.3 Field Monitoring Equipment Calibrations 4-10
4.8.4 Blower/Flare Station Monitoring 4-11
4.8.5 Wellhead Monitoring 4-11
4.8.6 Initial Wellhead Measurements 4-11
4.8.7 Adjusted Wellhead Measurements 4-13
4.8.8 Corrective Action Documentation and Rechecks 4-13
4.8.9 120-Day Exceedance Clock 4-14
4.8.10 Additional Monitoring Required 4-14

SECTION 5 Greenhouse Gas Monitoring 5-1

SECTION 6 Blower/Flare Stations 6-1
6.1 Operating Philosophy 6-1
6.2 Monitoring Minimum Requirements 6-2
6.3 Priority of Data Recorders 6-4
6.3.1 Remote Data Acquisition Systems 6-5
6.4 Restriction on Modifying Control Panels 6-5

SECTION 7 SUBSURFACe Gas Migration Monitoring 7-1
7.1 General 7-1
7.2 Site-Specific Monitoring Requirements 7-1
7.3 Monitoring Probe Construction 7-1
7.4 Timeline for Monitoring 7-2
7.5 Monitoring Procedures 7-2
7.5.1 On-Site Structure Monitoring 7-2
7.5.2 Probe Monitoring 7-3
7.6 Reporting 7-3

SECTION 8 Surface Emissions Monitoring 8-1

SECTION 9 Liquid Level Measurements 9-2
9.1 Overview of Liquid Level Evaluation Process 9-2
9.1.1 Basis of Calculations 9-2
9.2 Measurement Frequency 9-2
9.3 Equipment Specifications 9-3
9.4 Preparation 9-3
9.5 Liquid Measurement Procedure 9-3
9.6 Data Management 9-4
9.6.1 Site Build/As-Built Data 9-4
9.6.2 Field Measurements and Related Data 9-4

SECTION 10 Startup Procedures for New LFG Collectors 10-1
10.1 New LFG Collector Installation and Startup 10-1
10.1.1 Replacement Wells/Collectors 10-1
10.1.2 Startup Procedure for New Collectors 10-1
10.2 New GCCS Startup 10-2

SECTION 11 Data Management, Handling, and Reporting 11-4
11.1 Data Management and Handling 11-4
11.1.1 Data Management Responsibilities 11-4
11.1.2 Data Handling 11-4
11.1.3 Electronic Data 11-5
11.1.4 Written Log Book Data 11-5
11.1.5 Data Review 11-6
11.1.6 Data Approval 11-6
11.2 Reporting and Meetings 11-7
11.2.1 Daily Logs 11-7
11.2.2 Monthly Reports 11-7
11.2.3 Quarterly Reports 11-8
11.2.4 Monthly SOP Meetings 11-8
11.3 SSM Documentation 11-9

SECTION 12 Subsurface Oxidation Events 12-1
12.1 Symptoms 12-1
12.2 Notification 12-1
12.3 Initial Investigation 12-1
12.4 Data Analysis 12-2
12.5 Removing Sources of Oxygen 12-3
12.6 Things to Avoid 12-3

12.7 Continued Monitoring 12-4
12.8 Repairs 12-4
12.9 Timeline 12-4

SECTION 13 GCCS Inspection and Maintenance 13-1
13.1 Component Integrity Checks 13-1
13.2 Temporary Repairs 13-1
13.3 Cover Integrity and Well Inspection (MOnthly) 13-1
13.3.1 Cover Integrity 13-1
13.3.2 Well Casings 13-2
13.4 Control Device System Operation 13-2
13.5 Monthly Inspection and Maintenance 13-2
13.6 Quarterly Inspection and Maintenance 13-6
13.7 Semi-Annual Inspection and Maintenance 13-7
13.8 Annual Maintenance 13-7
13.9 Spare Parts 13-8
13.9.1 Control System 13-8
13.9.2 Collection System 13-8

SECTION 14 14-1
Leachate Collection System OPerations 14-1
14.1.1 Pump Operation 14-1
14.1.2 Liquid level monitoring 14-1
14.1.3 Force Main Inspections 14-2
14.1.4 Flow meter monitoring and inspections 14-2
14.1.5 Monthly Monitoring of Leachate Water Quality 14-2
14.1.6 Annual LCRS Performance Testing 14-3

ABBREVIATIONS AND DEFINITIONS

Because it is common for state or local regulatory agencies to be delegated authority from U.S. EPA to implement federal environmental regulations, each state or local agency may define applicable terms differently or have different interpretations of how a Rule is to be implemented. Because of the wide variation that exists among agencies, specific definitions and interpretations are not addressed. It is the responsibility of the OM&M Provider to be aware of definitions and interpretations of Rules used by state or local agencies and to apply them appropriately, including the use of the following terms which, for purposes of this document, have these meanings:

Abandoned Well	An extraction well permanently removed from GCCS
ACO	Alternative Compliance Option(s)
APCD	Placer County Air Pollution Control District
CPVC	Chlorinated polyvinyl chloride pipe
Decommissioned Well	An extraction well that is temporarily removed from GCCS
EG	State Emission Guidelines for Municipal Solid Waste Landfills
GCCS	Gas collection and control system (landfill gas management system)
HASP	Health and Safety Plan
HDPE	High Density Polyethylene Pipe
Landfill Operations Manager	Person responsible for landfill operations - Other titles typically assigned to this individual include: General Manager, Site Manager, Operations Manager
LFG	Landfill gas
LFGE	Landfill Gas to Energy Facility
NSPS	New Source Performance Standards for Municipal Solid Waste Landfills
OM&M	GCCS operation, maintenance, and monitoring
OM&M Provider	Personnel responsible for the Operations and Maintenance of the GCCS. This term is used for internal WPWMA Environmental Technicians, Specialists, and management team and OM&M contractors.
OSHA	Occupational Safety and Health Agency
Prime Mover	Fan, blower, compressor or similar device used to generate negative pressure on the landfill gas collection system
PVC	Polyvinyl Chloride Pipe
SCADA	Supervisory Control and Data Acquisition
SEM	Surface Emissions Monitoring
SOP	Landfill gas management Standard Operating Procedures as described in this document
SOW	Site-specific scope of work for GCCS OM&M services
SSM	Startup, Shutdown and Malfunction
SWANA	Solid Waste Association of North America
WPWMA	Western Placer Waste Management Authority
WPWMA LFG Operations Manager	WPWMA staff representative(s) designated by the WPWMA to oversee the GCCS and LCRS operation

Terms not defined above shall have the meaning expressly defined in the body of this document.

SECTION 1
INTRODUCTION

This document presents the standard operating procedures (SOP) and minimum operation, maintenance, and monitoring (OM&M) efforts required of those parties responsible for performing landfill gas collection and control system (GCCS) management and leachate collection and recovery system (LCRS) OM&M services at the Western Regional Waste Management Authority (WPWMA) landfill. The procedures and guidelines apply to WPWMA employees and consultants and contractors providing GCCS OM&M services.

This document includes the procedures and minimum requirements for:

- Monitoring, inspection, and maintenance of GCCS and LCRS system components and ancillary equipment;
- Monitoring, inspection, and maintenance of blower stations and LFG control devices (flares, etc.);
- Data management; and
- Reporting related to GCCS and LCRS management.

1.1 GOALS

The WPWMA is committed to complying with federal, state, and local regulations related to LFG management and to being a good neighbor by controlling odor and subsurface migration of explosive gases that could potentially impact the surrounding community. To accomplish these goals and other goals, the WPWMA has adopted a stringent program for operating the GCCS and LCRS. This program may require effort above and beyond that which WPWMA is obligated to perform under applicable permits or regulations. The objective of this effort is to operate the GCCS in a proactive manner before issues arise that might otherwise demand immediate attention and/or substantial cost to remedy.

To ensure consistent and reliable GCCS operation, meet regulatory requirements, and be a good neighbor in the community, the GCCS must be operated with the following goals in mind:

- Meet and/or exceed the requirements of the federal New Source Performance Standards (NSPS) and Emission Guidelines (EG).
- Operate within the limits and guidelines of WPWMA's SOP.
- Control fugitive odors and surface emissions.
- Control subsurface LFG migration.
- Avoid negative groundwater impacts from LFG.
- Operate the GCCS using best industry practices in a professional and safe manner.
- Operate the GCCS to maximize the flow and methane content to the abatement devices

1.2 SITE-SPECIFIC VARIANCES

Site conditions and permit requirements may necessitate future site-specific revisions or modifications. Therefore, modifications may be requested with appropriate approvals of those changes by WPWMA's Manager, Landfill Gas Operations.

1.3 PROCEDURES FOR REQUESTING SITE-SPECIFIC SOP VARIANCES

If variances to the SOP are warranted to address updated conditions or permit requirements and not just as a matter of convenience, the process outlined below may be followed. Modifications will be considered and must be approved by WPWMA LFG Operations Manager.

At a minimum, a request for an SOP variance shall include:

A. The original SOP statement, condition, or procedure redlined to illustrate the proposed changes.

B. Engineering evaluation and supporting documentation that justifies the change, including:

1. Engineering evaluation of the GCCS illustrating that changing the SOP, system or equipment would be beneficial, that the SOP cannot be met and is outside the control of the OM&M Provider and cannot be resolved through appropriate system or equipment modifications.
2. Minimum of six months of data, testing information, or engineering calculations supporting the proposed change.
3. Analysis showing that the proposed change does not impact any WPWMA goals or regulatory obligations.

1.4 SOP UPDATES

This SOP may be modified as new technology, methods, and procedures related to landfill gas management are adopted. Suggestions for changes should be directed to WPWMA's Manager, Landfill Gas Operations.

1.5 DISCLAIMER

Nothing presented in this document grants permission to any party engaged in GCCS OM&M services at the WPWMA facility to violate federal, state, or local laws, regulations, permits, ordinances, or consent orders while conducting the services.

SECTION 2
GENERAL INFORMATION

2.1 FORMAT OF SOP

Imperative and abbreviated language is used in the SOP that is directed at the party performing the OM&M services unless specifically noted otherwise. Note that whether stated imperatively or otherwise, all requirements must be met unless an approved variance is granted.

For incomplete sentences, the reader should insert "shall", "OM&M Provider shall", or similar mandatory phrases by inference.

2.2 HEALTH AND SAFETY

All WPWMA personnel performing work on LFG management systems shall abide by WPWMA health and safety policies and shall participate in WPWMA's general safety training and supplemental training specifically related to landfill gas and leachate management. Each contractor, including the WPWMA GCCS and LCRS OM&M Provider(s) shall file with the WPWMA their own corporate and project-specific health and safety plans (HASP) prior to the commencement of work at any site, and abide by it.

2.3 QUALIFICATIONS AND GENERAL REQUIREMENTS

OM&M technicians are critical to the proper functioning of the GCCS. In order to ensure the project is staffed with professional and experienced technicians who perform services with WPWMA's best interests in mind, WPWMA has implemented the following minimum personnel requirements.

- OM&M Providers shall provide routine and periodic training of field and office personnel from the Solid Waste Association of North America (SWANA) or similar trade group to ensure that services provided WPWMA are in accordance with the most recent state of the practice and consistent with industry standards and best practices.

2.3.1 Self-Performance of Work

The OM&M Provider must be able to self-perform all routine and non-routine services and have capability for performing monitoring, maintenance, troubleshooting, and repair work on all portions of the GCCS with the following exceptions:

A. Electrical and mechanical repair and troubleshooting of proprietary systems (such as control logic, Supervisory Control and Data Acquisition [SCADA] Systems)
B. Medium or high voltage electrical panel work
C. Flare source testing

2.3.2 Work by Trained and Certified Personnel

Any confined space, excavation, or pipe fusion work conducted in support of OM&M work shall be performed only by trained and certified individuals, and the OM&M Provider shall take full responsibility for the safety and quality of work by their employees, contractors, and subcontractors. Certifications for such training shall be posted on the inside wall of the onsite job office.

2.3.3 Skills and Knowledge

Technicians performing OM&M services at WPWMA facilities must have a working knowledge of:

A. Equipment
   1. Monitoring equipment (hardware, software, calibration procedures, etc.) used to perform the work.
   2. Prime mover equipment (blowers, flares, control systems, compressors, piping, valves, gas driers, gas coolers, flow measurement devices, etc.).
   3. LFG wellfield components (wellheads, vertical and horizontal wells, vents, geosynthetic liners and boots, electric and pneumatic pumps, drip legs, gravity traps, sumps, etc.).
   4. Personal computers, specifically, software to download data, upload data to WPWMA's web-based LFG data management, email, and spreadsheets.
   5. The WPWMA's GE iFix SCADA system software and related Historian Excel plug in.

B. Regulations and Permits
   1. New Source Performance Standards (NSPS) for Municipal Solid Waste (MSW) Landfills (40 CFR 60 Subpart WWW)
   2. Site-specific Title V operating permit and relevant state permits,
   3. Federal and state regulations applicable to landfills and OM&M services
   4. Site-specific consent orders, operation plans, guidance documents, etc., related to the GCCS, odor control, and perimeter probe and surface emission monitoring, including:
      i. GCCS Design Plan
      ii. SEM Plan

C. COORDINATION WITH LFGE PLANT OPERATOR

If the GCCS supplies gas to a LFGE plant or other beneficial use facility, WPWMA shall notify the plant operator of the schedule for obtaining liquid levels, performing system repairs and modifications and/or emergency repairs, so the plant can make adjustments to its operations during that time and reduce unnecessary downtime. The WPWMA, OM&M Provider, and LFGE Plant Operator shall conduct bi-weekly meetings to discuss operations, scheduled maintenance and areas of concern, etc. A group text message shall be established with the WPWMA, OM&M Provider and LFGE Plant Operator to ensure communication on shutdowns, wellfield activity and changes, unscheduled maintenance and/or repairs. During scheduled maintenance, construction or repairs, shut downs to the GCCS may be necessary. In the event of a shut down the following protocol will be followed:

1. The OM&M Provider shall send notification on the group text message to confirm LFGE Operator is prepared for the shut down of system. An estimated time of work completion will be given and verification of ready status will be given.
2. The OM&M Provider shall send group text message updates to work status during shut down and alert LFGE Operator to any delays.
3. The OM&M Provider shall send notification upon completion of work and GCCS start-up. Upon start-up of GCCS the OM&M Provider shall monitor the gas flow at the BFS to ensure the gas composition is within normal range for the safe start-up of the LFGE Plant.

2.4 GCCS EMERGENCIES

A GCCS emergency is defined as an urgent matter regarding the operation and maintenance of the GCCS (and not otherwise covered by other procedures, specifically the SSM or HASP) that is, or has the potential to be, a violation of the site's permit(s) or federal, state, or local regulations or could cause significant damage to the landfill or its infrastructure.

2.4.1 Notification to WPWMA Personnel

Communicate the GCCS emergency to the Landfill Operations Manager as soon as practical, but **no more than 1 hour after identifying the event.** The OM&M technician or project manager shall attempt to notify the Landfill Operations Manager by phone and then text; notification via e-mail alone shall only be acceptable if multiple attempts by phone or in person are unsuccessful in reaching the WPWMA personnel. In communicating the nature of emergencies to WPWMA, include the following information:

- A description of the GCCS emergency,
- Specific condition of the permit(s) or federal, state, or local regulation that may have been or could be exceeded if action is not taken immediately, and
- Specific location where the GCCS emergency occurred or is occurring.

If the GCCS emergency was conveyed verbally, follow up with an e-mail or other written documentation within one business day confirming the discussion.

The OM&M Provider shall not leave the site before either the Landfill Operations Manager is notified of the GCCS emergency and has agreed that the services of the OM&M Provider **are not** required to address the situation. If the Landfill Operations Manager is not available to address the GCCS emergency, the OM&M Provider shall use the call tree to contact another WPWMA representative regarding the situation.

2.4.2 Regulatory Notification

If necessary, the Landfill Operations Manager will notify the appropriate regulatory agency of the situation. The OM&M Provider **shall not** contact any federal, state, or local agencies on behalf of WPWMA unless specifically directed to do so by the Landfill Operations Manager.

2.4.3 Press/News Agencies

Only authorized WPWMA personnel are permitted to speak to the press, civic leaders, or other outside parties regarding WPWMA facilities or operations. The OM&M Provider shall not speak to these parties on behalf of WPWMA.

2.5 CONTACT CALL TREE FOR GCCS EMERGENCIES

Before starting field work, the OM&M project manager shall prepare a call tree that specifies, in order, who should be called in case of a GCCS emergency. At a minimum, the call tree shall include:

- OM&M lead technician and alternate technicians
- OM&M project manager

- Landfill Operations Manager – Person responsible for landfill operations - Other titles typically assigned to this individual include: General Manager, Site Manager, Operations Manager
- WPWMA LFG Operations Manager

Include the following information for each person:

- Office Phone
- Cell Phone
- Home Phone (optional)
- Email address
- Business Address

Provide a copy of the call tree to each person listed on the tree, including all OM&M personnel who perform work at the site. Place a copy of the call tree in a conspicuous location at the site's blower station control panel.

SECTION 3
GCCS OPERATING GOALS

3.1 DEFINITIONS

The following terms are used in this section and the remainder of this SOP.

- **Pressure vs. vacuum:** These terms are well known, but it is important to understand that vacuum is defined as negative pressure, and as such, there are two ways in which we can describe the pressure in a header or well. For example, we can say that a well has an initial static pressure of -3.5 inches of water column (in-w.c), or that it has a vacuum of +3.5 in-w.c. Similarly, we can say that the inlet of a blower skid has either -40 in-w.c. pressure or +40 in-w.c. vacuum.

  Note that in most cases, WPWMA will refer to "pressure" and not "vacuum" in order to be consistent with nomenclature and standards used in typical monitoring equipment. The exception to this is when referring to the negative pressure set point at the inlet of the blower system, which is almost universally referred to in the industry as the "vacuum set point". We recognize this inconsistency, but retain the use of that term since it is so commonly used in the LFG industry.

- **System pressure:** The static pressure measured in the header or lateral piping.

3.2 VACUUM SET POINT

WPWMA considers the vacuum set point an integral part of maintaining the overall "health" of the GCCS wellfield. Vacuum in the header should be held steady by using variable frequency drives (VFDs) on the blowers that are controlled by a pressure transmitter mounted upstream of the inlet of the blower station condensate knockout pot (KOP). Vacuum should be maintained as low as possible while ensuring minimum acceptable vacuum is available to the furthest points of the collection system. The site-specific vacuum set point is established and monitored at the inlet of the blower system (i.e., at the inlet of the KOP).

3.2.1 Goal of Vacuum Set Point

A vacuum "set point" shall be established by determining the highest pressure (i.e., smallest vacuum) at the blower skid inlet that allows the wells to remain within the operating range goals and to maximize LFG collection. The wellfield will be consistently balanced and tuned to this set point. The set point, once established, should not be changed unless wellfield conditions warrant an increase or decrease in pressure to accomplish balancing and tuning goals.
The goal of the vacuum set point is to:

- Provide sufficient vacuum to all portions of the LFG piping network
- Provide LFG extraction consistency.
- Facilitate consistent balancing and tuning of the wells.
- Minimize the potential to over pull the wells, which can lead to introducing ambient air into the waste mass.
- Prevent under pull, which can lead to reduced gas extraction and increased surface emissions, odors, and subsurface gas migration.
- Eliminate unnecessary use of electricity to generate unnecessary vacuum.

- Minimize impact if GCCS pipeline, fitting, or joint fails. Having minimal vacuum reduces the potential for large amounts of soil, trash, air and debris to enter the GCCS if a failure occurs.

A minimum system vacuum set point will be set based on the following:

- Input from the OM&M Provider.

- Other data, including engineering calculations and equipment performance limits and capacities.

- Analysis of the GCCS to ensure that the set point achieves sufficient negative pressure to keep the wellfield in compliance with:

    - Established operating parameters and thresholds
    - Perimeter gas probe limits
    - Programs to control fugitive gas emissions/odors
- As of July 2020, the inlet vacuum setting was 63.5" w.c.

3.2.2 Changing the Vacuum Set Point

Once established, the vacuum set point shall not be changed unless deemed necessary by WPWMA and OM&M Provider. If the set point is to be changed, the OM&M Provider shall notify WPWMA of the proposed change and why the change is necessary. The OM&M Provider shall not change the vacuum set point more than 10% (+ or -) without approval of the WPWMA.

3.3 NSPS/EG THRESHOLDS AND WPWMA SOP TARGETS

WPWMA is committed to providing consistent and reliable GCCS operation, and each GCCS must be operated with the goals listed in Section 1 in mind:

- Meet and/or exceed the requirements of the federal New Source Performance Standards (NSPS) and Emission Guidelines (EG).
- Operate within the limits and guidelines of WPWMA's SOP.
- Control fugitive odors and surface emissions.
- Control subsurface LFG migration.
- Avoid negative groundwater impacts from LFG.
- Operate the GCCS using best industry practices in a professional and safe manner.
- Operate the GCCS to maximize the flow and methane quality to the flare and on site LFGTE facility.

The following default operational targets have been established to ensure that WPWMA GCCS achieve the minimum criteria consistent with the NSPS or the California Landfill Methane Rule The OM&M Provider shall meet the more stringent of either the:

- NSPS/LMR, state, or local regulatory operating limits,
- WPWMA SOP target operational levels, or
- Site-specific operating limits.

The table below summarizes NSPS/EG regulatory thresholds and WPWMA SOP targets. State, local, or site-specific limits may be inserted as they are approved (site-specific limits must be approved per the procedures presented in Section 1).

Parameter at the Wellhead	NSPS/EG Threshold	SOP Target
Oxygen (% by volume)	<5	<2 maximum (<1 typical)
Pressure (in-w.c.)	<0	<0
Gas temperature (°F)	<131	<131 (1) (<120 typical)
Methane (% by volume)	N/A	(50 typical)
Balance gas (% by volume)	N/A	<20
Gas flow rate (scfm)	N/A	≥ 5
Minimum system pressure (in-w.c.)	N/A	≤ -10 (2)
Monitoring frequency	Monthly	Monthly (see Section 3.3)

(1) Unless reasonable higher operating values (HOVs) have been approved by the applicable regulatory agency or enhanced monitoring has been performed and appropriate measures are in place to accommodate elevated temperatures.
(2) Measured at the hydraulically most distant point of the GCCS (i.e., the point in the GCCS with the highest system pressure (lowest system vacuum)).

3.4 ESTABLISHING SITE-SPECIFIC OPERATING LIMITS

There are alternate operating limits that can be established for a GCCS:

1) **Variances to regulatory parameter thresholds.** Variances to NSPS/EG parameter thresholds are also known as "higher operating values" (HOVs). Regulatory HOVs cannot be exceeded, regardless of any site-specific SOP limits. If applicable, establishing a site-specific operating value shall be performed in conjunction with obtaining an approved variance from the applicable regulatory agency.
2) These must be proposed by WPWMA to the APCD with assistance from the air compliance consultant and with input from the OM&M Provider, as necessary.

3.4.1 Management of Regulatory HOVs

Higher operating values may be requested from the applicable regulatory agency as deemed appropriate by WPWMA's Landfill GCCS Design Plan provided in Appendix A.

WPWMA or the air compliance consultant shall track and document all alternate operating limits or HOVs approved by local, state, or federal regulatory agencies in accordance with the requirements of WPWMA's *Landfill GCCS Design Plan provided in Appendix A* At a minimum, the following information must be tabulated, kept up-to-date, and uploaded to WPWMA's LFG database for each approved HOV:

1. Well ID
2. Date of approval of alternate value
3. Duration of approval (if temporary)
4. Parameter for which the alternate operating limit was granted
5. New allowable operating threshold
6. Regulatory citation or copy of document granting approval

If applicable, the OM&M Provider shall input pertinent information into WPWMA's LFG database for the purpose of automatically identifying exceedances or compliance timelines.

3.4.2 Temporary Alternate Operating Limits

Temporary alternate operating limits may be applicable under certain circumstances, including the following:

- Subsurface oxidation (SSO) or landfill fire – An example of this would be when wells are turned off in an attempt to prevent pulling oxygen into the waste mass.

- Decommissioned well(s) – This includes wells taken off-line from the permitted GCCS with regulatory approval. In this case, the well is left in place and is available to be reconnected to the GCCS in the event surface emissions in the area are detected.

- Other conditions as defined by permit or consent order.

If temporary alternate operating limits are used, the OM&M Provider shall make note that such limits are being applied within the monthly GCCS operating report.

3.4.3 Permanent Alternate Operating Limits

Alternate values for pressure, temperature, or oxygen may be established by:

- Variance letter from the local permitting authority or U.S. EPA.

- Permit condition listing the approved alternate value.

- Rule citing other allowable limits.

- Site-specific conditions, provided that limits established by permit, rule, or consent order are not exceeded.

SECTION 4
WELLFIELD OPERATION, MONITORING, AND TUNING

4.1 OVERVIEW AND GENERAL PRINCIPLES

To assure proper GCCS operation, WPWMA has established the following:

- **Single source of vacuum for the wellfield.** Negative system pressure shall be supplied by a single blower station for the wellfield. This requires the site infrastructure to be designed and constructed to accommodate all of the LFG flow to a single point, regardless of the number of control devices or end uses of the LFG. The single blower station then pushes the gas at minimal positive pressure to the flares and/or a delivery point from which it then travels to a beneficial end use (i.e., LFGE) project.

- **Blowers run on inlet vacuum control.** The blower system has VFDs that adjust the blower speed based on the blower discharge pressure continuously monitored at the outlet to the LFGE and flares that control vacuum applied to the wellfield.

- **Comprehensive wellfield data collection and wellhead flow rates.** This site-specific scope of work lists a myriad of data that must be collected. All of this information is vital to properly assess, troubleshoot, and improve, if necessary, the GCCS. For this reason, it is imperative that valid wellhead monitoring data include accurate wellhead flow rates and technician comments entered into the monitoring instrument (If applicable).

- **All data is considered compliance data.** All data, whether taken by the OM&M Provider, other parties, or regulatory agencies shall be treated as "compliance data". All data must be uploaded to WPWMA's LFG database, and all of it is subject to regulatory thresholds and scrutiny. Under no circumstances shall the OM&M Provider obtain data and not provide it to WPWMA or fail to enter it into the site operating record via the LFG database.

- **All data must be uploaded to WPWMA's LFG database.** Without exception, all GCCS and gas migration monitoring (i.e., probes and structures) data must be uploaded to WPWMA's LFG database.

- **Competency of OM&M personnel.** WPWMA has minimum standards for technician experience and competency, as listed Section 2.4.

4.2 DATA TAGS

Various information tags are used in this SOP and are commonly used in the practice of performing OM&M at the site. Some of these are defined or described below.

- **Location –** This is the physical location where the reading is taken. In many cases, the "Location" and "Point Name" will be the same, unless there are multiple sampling points at a given location. For example, if GP-5 has a shallow and deep component, the "Location" is designated as GP-5, but the actual monitoring "Points" would be designated as GP-5S and GP-5D for the shallow and deep probes, respectively, located at GP-5.
- **Point Name –** The Point Name is the name by which the well, probe, or sampling location is known (e.g., EW-01, GP-08, inlet, outlet, etc.) The Point Name is not limited by the number of

characters. It should be descriptive enough so that users understand what it is, but should not be overly long, either.

- **Point ID** – This is the ID used by the LFG monitoring instrument (commonly known as the "GEM ID" when using a Landtec instrument). Point IDs must be unique for each site and for each monitored location.
- **Point Type** – Points are described as any of the following:

    - Well
    - Monitoring Probe
    - Sample Port
    - Flare-Engine-GHG
    - Calibration Record
    - Grid

Additional types may be added to the database in the future. Users are responsible for knowing the options available and ensuring that each Point ID is characterized properly with the correct "point type" designation.

4.3 IDENTIFICATION OF WELLS AND PROBES REQUIRING MONITORING

The WPWMA shall provide the OM&M Provider a copy of the most recent site plans and permit requirements and shall direct any questions on the required scope of work to WPWMA. At least annually, the WPWMA will communicate whether there are any changes in the wells to be monitored or if changes are expected based on planned GCCS expansions.

LFG Wells and Collectors

Regardless of NSPS/EG status, all wells/collectors are to be monitored at least once per month, unless otherwise noted by WPWMA. This includes vertical wells, horizontal collectors, shallow collectors, under-liner collectors (tie-ins to the leachate collection and removal system (LCRS), soil vapor extraction (SVE) wells, etc. In addition, the requirement to obtain flow rate measurements for each wellhead reading applies to all of these collectors as well.

Gas Migration Monitoring Probes and Structure Monitoring Locations

As with the GCCS components, the OM&M Provider shall verify the gas migration monitoring probe and structure locations are current to ensure the correct locations for probes and structure monitoring are covered. The site and OM&M Provider shall confirm that the OM&M Provider has a copy of the most recent site monitoring plan. If probes or structures have been added to the site's monitoring plan, WPWMA shall provide an updated list or map to the OM&M Provider.

4.4 MONITORING EQUIPMENT MINIMUM STANDARDS

The accuracy, completeness and dependability of the monitoring equipment used in the field is key to providing OM&M personnel with reliable results on which to base tuning decisions.

All GCCS field monitoring equipment must meet the following minimum requirements:

1. Infrared sensor technology for CH_4 and CO_2 measurement.
2. Electrochemical sensor for O_2 measurement.

3. Temperature probe to measure the temperature of the gas stream.
4. Internal pressure sensors to measure static, system, and differential pressures.
5. Ability to be calibrated in the field.
6. Ability to store measured data and user defined comments electronically.
7. Data shall be exported via a .csv file or encrypted file format supported by WPWMA's LFG database.

4.5 MONITORING POINT NAMING AND STANDARD COMMENTS

Each monitoring location must have a site-specific ID that is unique to the monitoring point. The IDs must be:

- Consistent with the site's GCCS Design Plan and Record Drawings
- Configured in the meter to accurately calculate flow rates from the well by recognizing the type and size of wellhead and the flow measuring device (pitot tube, orifice plate, venturi, etc.)

The OM&M Provider shall compile the Point IDs into a single ID set that shall be used for all work related to the site and upload it to WPWMA's LFG database. This will ensure that the most recent file is always available for alternate technicians and others who may perform monitoring at the site.

4.5.1 Calibration Reading IDs

All instrument calibrations shall be stored in the monitoring device and uploaded to WPWMA's LFG database. Calibration IDs shall consist of the 3 letter site code ("WES"), followed by "CG" to designate a calibration gas, followed by an indicator of the gas concentration. The "M" in the following examples indicates methane. The "O" indicates oxygen.

50% CH_4/35% CO_2/balance gas =	WESCGM50
15% CH_4/15% CO_2/remainder balance gas =	WESCGM15
4% O_2/remainder balance gas =	WESTCGO4
Atmospheric air =	WESCGAIR

4.5.2 Prime Mover Inlet and Outlet IDs

Establish IDs for the inlet and outlet of the prime movers (i.e., blower station) to differentiate readings taken at the beginning and end of each monitoring event.

4.5.3 Inlet and Outlet of Each Blower IDs

Establish IDs for the inlet and outlet of each individual blower. Each monitoring port shall be have a Point ID label affixed. These ports are used to measure pressure at the inlet and outlet of the blowers, without any losses that would be attributable to valves or fittings, and allow personnel to compare inlet and outlet pressure and flow rates to the blower curve for troubleshooting purposes or to confirm proper performance. For the Prime Movers, establish IDs to differentiate readings taken at the beginning and end of each monitoring event and record them. For all other blowers, it is not necessary to obtain readings at these monitoring locations during each monitoring event, however, these should be monitored periodically (i.e., at least semiannually) to compare blower performance to the blower curve.

4.5.4 Flame Arrestor Inlet and Outlet IDs

Flame arrestor ports provide the following important information:

1. Gas quality to the control device (for GHG monitoring purposes).

2. Flame arrestor inlet pressure (indicates whether excess pressure is present on the discharge side of the blowers, which impacts the amount of negative pressure that can be applied to the wellfield).

3. Flame arrestor outlet pressure (identifies whether there is excess pressure to the flare, which for an enclosed flare indicates clogging of the burner tips, or for an open flare may indicate that an orifice plate installed at the flare tip is too small).

4. Differential pressure across the flame arrestor indicates whether the flame arrestor element is in need of cleaning or other maintenance.

4.5.5 Greenhouse Gas Monitoring IDs

A separate Point ID is required for each LFG control device, including:

- Each flare
- LFG energy projects or other end users

If a control device is decommissioned and no longer in use, the OM&M Provider is responsible for changing the status of the applicable ID in the LFG database so that it is designated as inactive or decommissioned. Readings are not required for control devices that have been decommissioned and identified as such in the database.

4.5.6 Replacement/Redrilled Wells

If a well/collector is replaced (redrilled/reconstructed), a new collector name and Point ID must be established in accordance with the naming convention used on the Construction Drawings.

> *…Redrills shall have the same number as the well that it replaces, followed by a letter that indicates the number of times the well has been replaced. For example, if EW-16 is being abandoned and replaced with a new well, the replacement well shall be named EW-16A. If EW-16A is later abandoned and replaced with a new well, the new well shall be named EW-16B, and so on.*

The OM&M Provider shall designate the ID for the old well as "Abandoned" in WPWMA's LFG database, and the ID shall not be re-used in the future.

4.5.7 Allowable Comments

The OM&M Provider shall create a standard list of operational comments to utilize in the meter when monitoring and making adjustments. Comment Lists shall be unique for each point type. The utilized comments list will be the same on all site meters and OM&M technicians shall be trained to apply comments consistently. The following list presents suggested comments. Actual comments used can differ; however, a comment must be created and saved that clearly reflects the adjustment made:

a.) No Change
b.) Opened Valve ½ turn or less
c.) Opened Valve ½ to 1 turn
d.) Opened Valve > 1 turn
e.) Valve already open 100%
f.) Closed Valve ½ turn or less
g.) Closed Valve ½ to 1 turn
h.) Closed Valve > 1 turn
i.) Valve already closed 100%
j.) Barely Open
k.) Second reading
l.) Vadose Well NSPS Exempt
m.) Decom SSO Concern (temporary)
n.) Offline this Date
o.) Reconnected this Date
p.) Abandoned this Date (wellhead removed)
q.) GHG Point not in use
r.) Can Not Sample due to Access/Safety
s.) Remote Wellhead
t.) CO Tube Sample Completed
u.) H2S Tube Sample Completed
v.) Opened for Sample/Then Closed
w.) Prime Mover Set Point Changed

The OM&M Provider shall also create a standard list of operational comments to utilize in the meter if an operational issue is observed. Examples are as follows:

i) Surging in header (watered out)
ii) Surging in well (watered in)
iii) Bad sample ports
iv) Orifice Plate Changed
v) Valve needs replacement
vi) Flex hose needs extension
vii) Flex hose needs replacement
viii) Header vacuum loss
ix) Repair well bore seal
x) Well needs to be extended/lowered
xi) User defined – See field notes.

4.6 VACUUM SET POINT AND BLOWER/FLARE STATION OPERATION

The blower/flare station must be operated and maintained to provide a consistent negative pressure on the wellfield at the established set point. The OM&M Provider shall make necessary adjustments to the wellfield and the blower/flare station to maintain the set point during and after wellfield monitoring and tuning.

In the unique case where an outside party such as a LFGE plant is responsible for the prime mover operation (such as a temporary bypass condition if WPWMA's blower skid is offline), WPWMA or the OM&M Provider shall notify the party responsible for the prime mover of the following:

- Set point to be maintained
- The schedule for when monitoring will be performed.

The following actions shall be taken for situations in which consistent negative pressure is not being applied by the prime movers:

Prime Mover Shutdown

- If the prime mover(s) is/are down for 1 hour or more, WPWMA shall be notified immediately.

- Start back-up device (if present) and adjust the device to reach the vacuum to set point. Continue to monitor the wellfield once vacuum has stabilized from the back-up device.

- When prime mover shutdowns are the result of LFGE plant maintenance, it is imperative that monitoring schedules are communicated with the OM&M Provider to prevent future episodes.

Malfunction

- Postpone monitoring and adjustments until the malfunction is resolved, unless postponement will result in non-compliance of permit terms or regulatory requirements to obtain readings within a certain timeframe.

- Follow the SSM Plan.

- Perform postponed monitoring and adjustment as soon as practical after the resolution of the malfunction, but in no circumstance shall the postponement result in an exceedance of the applicable monitoring or adjustment standard timeline.

Design or Equipment Limitation

- WPWMA may initiate an investigation into system design or equipment limitations that may be preventing the application of a consistent negative pressure. The investigation must include at a minimum:

    - Analysis of cause of inconsistent negative pressure,
    - Evaluation of existing equipment,
    - Pricing to repair existing equipment or purchase of new equipment, and
    - Feasibility of achieving consistent negative pressure in a cost effective manner using best industry practices.

- If design or equipment modifications are not possible, the operator of the prime mover shall make periodic adjustments of the vacuum to maintain the set point. Adjustments should be made as necessary and at least weekly.

4.7 WELLFIELD COMPONENT INTEGRITY CHECKS

The purpose of the wellfield component integrity check is to identify any condition that renders or could render the GCCS inoperable or impair performance. This information will be used by WPWMA

to approve system improvements and schedule repairs. OM&M Provider shall submit this information to the WPWMA with the monthly report and bring any urgent issues to the attention of WPWMA and Landfill Operations Manager immediately.

4.7.1 Survey Stakes or Poles

During GCCS construction events, the contractor may use stakes or pipes to mark underground pipes to be surveyed. These are supposed to be removed before the contractor demobilizes from the site. Because the stakes can leave holes from which surface emissions may occur and because survey pipes can be conduits for direct emissions of LFG to the atmosphere, the OM&M Provider shall inform WPWMA if any stakes or pipe markers are left in place by the construction contractor so that WPWMA can coordinate their removal.

4.7.2 LFG Well and Collector Integrity

Before leaving each well, the technician shall check the well casing, wellhead, and lateral to ensure all components are tight, not leaking, and functioning properly. Issues observed during monthly inspections shall be documented and included in the monthly report or communicated to WPWMA by another means if otherwise requested. Repairs shall be made as expeditiously as possible, and in some cases, as listed below, shall be performed during the routine monitoring event. Items to inspect are listed below:

- Flex Hose: Ensure all flexible hoses are of adequate length, are not bound, kinked or constricted in any way and are providing proper drainage of condensate. Weathering of the hose shall be noted (breaks, cracks, brittle condition, etc.) and the hose shall be replaced if necessary.

- Wellhead Valve: Ensure all wellhead valves are properly functioning. This can only be performed by occasionally exercising the valve along its entire operating range to ensure proper function. Replace broken valve components as needed.

- Sample and Temperature Ports:
    - Check all sample and temperature ports on the well and wellhead to ensure they are installed tightly, functioning properly, and are not leaking. Replace leaking ports.
    - Ensure ports are free of debris, and clean as necessary.
    - Inspect sample port caps for damage or deterioration and replace if necessary.
    - Damaged or leaking sampling ports or missing port caps shall be replaced during routine monitoring.
    - Thermometers that are permanently installed shall be inspected for proper operation. Check thermometers that are installed with quick-connect fittings quarterly and those without quick-connect fittings annually, at a minimum.
        - Compare measurements to known standards to determine accuracy.
        - Rotate to ensure proper dial operation.
        - Inspect O-rings or seals for damage or wear.
        - Replace thermometer if necessary.

- Flow Measurement Components:
    - Flow measurement is mandatory for wellheads with flow capability, and the OM&M Provider shall take steps to ensure accurate readings are obtained.
    - Ensure that flow measurement components (pitot tubes, orifice plates, etc.) are properly installed and that the monitoring device is set up properly to record flow rates.

  - If orifice plates are used, the OM&M Provider shall ensure the orifice plate is properly sized so that excessive pressure loss is not occurring across the plate, that the differential pressure is in the desired range specified by the wellhead manufacturer (generally between 6 and 0.5 inches of water column vacuum) to ensure accurate readings, and that the orifice plate size is correctly entered into the monitoring instrument and Site Build table in the WPWMA LFG database.

- Mechanical Joints:
  - Ensure all mechanical joints (Fernco [rubberized flexible] couplers, PVC unions, electrofusion couplings, etc.) are tight, functioning properly, and are not leaking.
  - Ensure all clamps and mechanical fasteners are tight and operating properly.
  - Document indications of vacuum leaks and immediately repair. Potential leaks include but are not limited to:
    - Hissing sound coming from a joint.
    - Staining or accumulation of liquid on a well casing or wellhead.

- Well Casing: Check well casing integrity and general ground conditions surrounding the extraction well. Voids and settlement near any well shall be noted and communicated to WPWMA and Landfill Operations Manager.

- Well ID Label: If the well is not labeled, the OM&M Provider shall install appropriate sized labels with the ID number.

- Dewatering Pumps: Note any kinked liquid discharge hoses, leaking liquid discharge hoses and fittings, leaking air supply components (regulators, fittings, valves), etc. The OM&M Provider shall bring these items to the attention of WPWMA or Landfill Operations Manager and make arrangements to fix them.

4.7.3 Valves and Condensate Management System Integrity

The OM&M Provider shall also inspect all condensate sumps/traps and isolation valves (header, air supply, and condensate/dewatering system force mains) to ensure the following:

- Vacuum is present in the sump or trap at expected and appropriate values.
- All sump components (gaskets, lids, bolts, etc.) are tight and not leaking.
- The pump is functioning and air is available to the pump. All pneumatic pumps shall have cycle counters to help ensure that the pump is cycling at the expected rate between inspections. If the pump is electric, check the control panel and totalizer (if present) to ensure the pump is properly functioning and pumping at the expected rate between inspections.
- All valves are operational. This can only be accomplished by regular exercise of the valve.
- No PVC or CPVC fittings or valves may be used on any air supply lines per OSHA. The OM&M Provider shall bring to the attention of WPWMA if PVC or CPVC components are installed on compressed air systems and coordinate replacing those components as soon as possible.

4.8 WELLFIELD MONITORING

Without complete and accurate data, improper tuning adjustments can occur, which can lead to compliance, odor, and/or migration issues, and potentially cause long-term damage to the gas

producing bacteria population in the landfill. **A complete and accurate data set for each monitoring event is required by WPWMA.** Data will be used to document compliance, track wellfield trends, and assist with budgeting wellfield expenditures, etc. Incomplete data sets, corrupted data, missing data, chevrons (placeholder data/blanks), etc., are unacceptable.

This section defines standards intended to help ensure valid data is obtained by the OM&M Provider.

4.8.1 Monitoring Schedule and Tuning Frequency

The ultimate goals of balancing and tuning a wellfield are to:

- Maintain the wellfield in accordance with federal, state and local regulations
- Maintain compliance with site permits
- Control odors
- Control subsurface migration and fugitive surface emissions of LFG

The following balancing and tuning protocols have been developed to achieve these goals and include flexibility to address site-specific situations.

Wellhead tuning shall typically occur at the same time the wells are monitored. Balancing and tuning events will be performed in one day or, if additional time is required, on consecutive days. The negative pressure at the blower/flare station must remain consistent for the entire monitoring event. Follow-up monitoring between events will be performed as needed.

4.8.1.1 NSPS/EG Regulated Sites

IMPORTANT: *The NSPS/EG regulations do not include exceptions to the monthly monitoring or recheck requirements. It is the responsibility of the OM&M Provider to work with WPWMA to ensure all parties understand the monitoring requirements and to properly document if any approved regulatory variances are applicable.*

At a minimum, the entire GCCS shall be monitored and tuned **one time per month**. If local, state or federal regulations dictate a different frequency, monitoring and tuning shall be performed according to the more stringent frequency.

Scheduling (NSPS/LMR Site)

The initial monitoring and tuning event should be completed by the 15th of the month, unless site conditions dictate otherwise. This guideline is intended to allow regulatory follow up monitoring, if required, within the month to meet the 30-day timeline.

A. Perform NSPS/LMR 5-day corrective actions on the same day that the parameter exceeded the limit, if possible.

B. Perform additional monitoring to troubleshoot compliance or operations issues as needed, with prior approval of WPWMA.

C. WPWMA may place the site on a twice per month monitoring frequency if it is determined that there are odor concerns, there is evidence of subsurface gas migration (or concerns about subsurface migration), if there are excessive surface emissions, or for other reasons. Failure to meet site permit conditions may also warrant this level of increased monitoring

frequency. Twice per month monitoring shall continue until the more frequent monitoring is no longer necessary or appropriate.

D. If the site is required to perform twice per month monitoring, the second monitoring and tuning event must be completed within 15 days of the start of the initial monitoring event and before the end of the month. The OM&M Provider shall schedule any 15-day remonitoring from the initial event in order to coincide with the second wellfield monitoring event. That is, the OM&M Provider shall avoid making special trips to the site for remonitoring events as much as possible.

4.8.2 Conditions Required for Wellfield Monitoring

Monitoring shall only be performed if the system pressure is stable and operations are representative of typical operating conditions. The exception to this shall be if regulatory deadlines are impending. (*Recall that earlier in this document it was explained that the NSPS/EG does not include provisions for not obtaining readings within the regulatory timeframes even if upset conditions exist.*) In that case, monitoring may proceed even if an uncharacteristically high number of exceedances might result (such as if the blower station is offline for multiple days and cannot be repaired in time to bring the system on line before the regulatory deadline for monitoring).

4.8.3 Field Monitoring Equipment Calibrations

Properly functioning equipment is vital for GCCS monitoring and ensuring data collected is accurate and reliable. This begins with using equipment that is properly calibrated and is functioning as designed by the manufacturer. The following section assumes that the monitoring unit has been factory calibrated and checked for proper performance at an interval recommended by the manufacturer, both of which are required by WPWMA.

Upon verification that the monitoring unit is properly maintained and functioning properly, use the following procedure for field calibration:

A. Utilize the appropriate site Calibration Reading IDs to store all calibration data in the monitoring instrument so that it may be uploaded to WPWMA's LFG database with the other monitoring data that will be collected. Include the calibration gas cylinder Lot # in the comments field for documentation and quality control (QC) purposes.

B. Inspect in-line filters for moisture and fine particles, and replace if necessary.

C. Inspect the integrity of the sample train and replace parts as necessary.
   1. Test the sample train for leaks. Tubing should seal tight onto the hose barbs.
   2. Note the condition of the tubing.
   3. Note the condition of sample fitting O-ring(s).
   4. Inspect the carbon filter for signs of breakthrough, and replace at least monthly.
   5. Inspect the water trap for signs of blockage and replace at least monthly

D. Perform field calibrations per the manufacturer's specifications. Including letting unit initialize and equilibrate to sampling conditions prior to calibration. At a minimum equipment calibration needs to be performed prior to each day of monitoring activities.

4.8.4 Blower/Flare Station Monitoring

The blower/flare station shall be monitored at the beginning and end of each day during which the wellfield is monitored. Data required to be collected includes the inlet gas concentrations, system pressure, flow rate, and blower system discharge pressure. Section 7 includes a comprehensive description of additional monitoring and maintenance activities that are required for the blower/flare station.

4.8.5 Wellhead Monitoring

The following requirements apply for wellhead monitoring:

1. If the initial reading at a well is not within NSPS/EG limits or the SOP targets, the technician must adjust the well and record a second complete reading. Utilizing the "adjusted flow", "adjusted pressure", and "adjusted temperature" in lieu of a complete second reading is not allowed because adjusted gas composition is not stored. If field instrument manufacturers modify their equipment in the future to record adjusted gas composition, WPWMA may reconsider not requiring a second complete reading.

2. The OM&M provider must make every attempt to avoid causing an NSPS/EG exceedance due to a well adjustment.

3. A "complete reading" is defined as an entire new set of measurements of methane, carbon dioxide, oxygen, balance gas, temperature, pressures, flow rate, etc. This includes the "Adjusted Values" that may be collected by a meter.

4. If any part of a complete reading (initial values or adjusted values) is not within the NSPS/EG limits, then the reading is considered an exceedance and corrective actions and rechecks must be performed.

5. A 15-day recheck is not required if the second complete reading that was taken to document the 5-day corrective action shows the well is back within NSPS/EG operating thresholds.

4.8.6 Initial Wellhead Measurements

The procedures listed in this section assume that the wellfield is already operating.

1. Make no wellhead adjustments while taking the initial readings. Adjustments should only be made while viewing the side-by-side (initial pressure vs. adjusted pressure) screen.
2. **ID Selection:** Select the appropriate well ID in the meter.
3. **Purge:** With the sample train and pressure sensor hoses disconnected, activate the meter's internal sample pump so that the entire sample train is purged and the results are indicative of ambient air (approximately 20-21% O_2 and 79-80% balance gas).
4. **Zero Pressure Transducers:** Perform transducer zero function to ambient air conditions. Be sure to minimize wind effects during the procedure by shielding the hose ends. Do not block hose ends while zeroing pressure transducers.
5. **Monitoring Port Integrity:** Check wellhead sample ports and fittings for cracks, bad o-rings and blockage by liquid, ice, spider webs, or other substances.
6. **Sampling:**
    a.) Connect all applicable sample train hoses. Verify that all connections are snug and air tight and that hoses are not pinched or kinked.

b.) **Temperature:** Record temperature using the permanently installed thermometer, if installed, or by inserting a temperature probe or dial thermometer into wellhead temperature sample port. Verify and store temperature reading (measured in degrees Fahrenheit).

c.) **Static Pressure:**
   i. Ensure the wellhead static pressure has stabilized before storing readings.
   ii. If pressure readings indicate surging, store the comment "surging" in the instrument.

d.) **Differential pressure:**
   i. The OM&M Provider shall ensure differential pressures are maintained within the range specified for each wellhead type to ensure accurate flow readings:
      a. Orifice Plate (0.5 – 5.0 inches of water column vacuum) – *Currently the WPWMA exclusively uses this type*. The OM&M Provider shall increase/decrease the orifice plate size to bring the differential pressure within the acceptable range.
      b. Pitot Tube (0.025 – 4.0) or Venturi (0.1 – 5.0) - OM&M Provider shall change the wellhead to the size required to maintain differential pressure is in the desired range.
   ii. Negative differential pressures – not acceptable. Negative differential pressures may indicate the following:
      a. An error in measurement.
      b. Well ID is not set-up properly in the meter.
      c. Surging

e.) **System Pressure:**
   i. Record the system pressure (i.e., header vacuum) from the port installed on the lateral side of the wellhead valve.

f.) **Flow Rate:** Flow rate measurements are required for each wellhead reading.
   i. Verify that the flow rate is properly displayed and appear accurate.
   ii. Verify that the differential pressure is within the range specified by the particular wellhead manufacturer to ensure accurate readings.
   iii. Provide results to WPWMA in the monthly report and identify if wellhead flow measuring device needs to be replaced or upgraded to the correct size to facilitate future flow rate measurements.

g.) Confirm the Point ID is properly set up in the meter and the correct ID has been selected. If not, restart the monitoring process.

h.) Select correct comment if an adjustment was made.
   i. Ensure each adjusted reading has a stored comment.
   ii. Choose a comment from the list in Section 5.5.9.

7. Store the reading.
8. **Exceedances:** If a wellhead adjustment was made, the technician shall take a second complete reading.
   a.) If the reading indicates an exceedance of NSPS/EG or other permit requirements, make an adjustment following the adjustment guidelines listed below and adhere to the monitoring procedures listed in the following sections for documenting 5-day corrective action implementation and 15-day recheck events.

4.8.7 Adjusted Wellhead Measurements

If a wellhead adjustment is required, a complete second reading is required by WPWMA.

A. Follow the monitoring procedures defined above for the initial reading.

B. Limit vacuum or flow change to 10% increase or decrease from the initial reading, except in the following situations. If these situations arise, a more aggressive adjustment can be made, but must be justified in the monthly report.
    1. Elevated levels of oxygen greater than or equal to 5% by volume,
    2. Wellhead temperatures greater than or equal to 131 degrees Fahrenheit,
    3. The well is in the vicinity of an SSO or suspected SSO.
    4. Other conditions discussed with WPWMA that warrant more aggressive tuning adjustments.

C. Once the adjustment has stabilized, store the reading with comments as described in Section 5.5.9.

4.8.8 Corrective Action Documentation and Rechecks

The NSPS requires two initial actions if an exceedance of the pressure, temperature, or oxygen (PTO) thresholds are detected:

- Within 5-days, implement corrective action to remediate the exceedance.
- Within 15-days, re-monitor the well to show that the exceedance has been remediated.

Additional steps may also be required by state or local regulatory agencies and other steps follow if the exceedance cannot be remediated within 15 days.

The OM&M Provider shall initiate/perform the corrective action (e.g., perform wellhead adjustments, address vacuum losses in a lateral pipe, etc.) on the same day as the initial monitoring. If this is not possible, the OM&M Provider shall implement the appropriate corrective within 5 days of the initial exceedance and re-monitor the well within 15 days of the initial exceedance.

4.8.8.1 NSPS/EG 5-Day Corrective Action Implementation

A. If wellhead adjustments, alone, are able to correct the exceedance, then the OM&M Provider shall make the wellhead adjustments on the date of the initial exceedance reading or within 5 days of that initial reading. This “second reading” shall be complete with gas quality, temperature, pressures, flow rate, and a comment entered into the “Comment” field in the instrument documenting the corrective action taken.

B. Comments entered into the monitoring instrument to document corrective actions must be consistent with the data collected.

C. Make adjustments during the recheck in accordance with procedures listed earlier in this section, as applicable.

    1. Make no wellhead adjustments while taking the initial readings. Adjustments should only be made in the side-by-side (initial pressure vs. adjusted pressure) screen.

2. Allow sufficient time after making an adjustment for the well/collector to stabilize prior to taking and storing data.

3. Stabilization times will vary but **cannot** be allowed to extend beyond applicable regulatory timelines.

4. It is not permissible to sacrifice one compliance parameter for another.

5. Measure the same parameters as those that were recorded for the initial reading.

D. Document corrective action or well adjustment.

4.8.8.2 NSPS/EG 15-Day Recheck

If the recheck and correction of the exceedance cannot be performed on the day of initial monitoring or within the 5-day corrective action implementation timeline, the recheck must be performed within 15 days of the initial exceedance.

The OM&M Provider shall document any additional corrective actions performed and provide this information to WPWMA and air compliance consultant in the monthly report for recordkeeping and reporting purposes.

4.8.9 120-Day Exceedance Clock

If a wellhead exceedance cannot be corrected within 15 days, per the NSPS/EG, the well must be replaced or additional corrective actions must be taken within 120 days. The well still must be monitored during this 120-day period, regardless of whether the exceedance exists. The NSPS/EG does not provide a mechanism that allows this monitoring to be skipped although the WPWMA has an approved Alternative Compliance Option that may extend this deadline on a case-by-case basis with APCD approval. Because it is a significant compliance issue, failure by the OM&M Provider to read a well during this 120-day period may be cause to terminate the OM&M contract.

4.8.10 Additional Monitoring Required

Various data must also be collected monthly from condensate sumps, condensate/liquids management drain lines and force mains, and leachate dewatering pumps as listed below.

4.8.10.1 Header Monitoring Points

- Collect pressure, flow and gas composition readings from main header pipeline sample ports. If ports are not currently installed at these locations, the OM&M Provider shall install ports of the same type as those used on the wellheads.

4.8.10.2 Condensate Sumps

- Collect system pressure at each condensate sump riser. If a port is not installed on the riser, the OM&M Provider shall install a port as part of its routine monitoring services. If monitoring ports are installed on the inlet and outlet piping of a sump, vacuum readings shall be taken at those ports, instead. If system pressure is not in line with expected values, the technician shall troubleshoot the cause. The OM&M Provider shall notify WPWMA of any system pressure issues within 2 hours of detection.

- Collect liquid levels from permanently mounted devices.

- Collect pump cycle count or totalizer reading and condition of air filter, regulator, and other above grade components of pumps, including any leaks or items requiring repair or replacement.

- Collect readings from any condensate sump flow meters.

4.8.10.3 Gas Well Dewatering Pumps

- Cycle count (totalizer reading from the cycle counter) for each installed pump.

- Condition of air filter, regulator, and other above grade components of pump, including any leaks or items requiring repair or replacement.

- Collect liquid levels monthly to ensure proper operation

4.8.10.4 GCCS-Related Force Mains and Gravity Drain Lines

- Force main pressure as measured by any gauges installed on lines.
- Gallon Meter readings for condensate force mains shall be collected weekly

SECTION 5
GREENHOUSE GAS MONITORING

The OM&M Provider shall take monthly greenhouse gas (GHG) readings as part of the routine work. Monitoring shall be performed in accordance with the monitoring requirements of the federal GHG Mandatory Reporting Rule (MRR) and any applicable state or local requirements. At present, the MRR requires monthly readings of methane concentration. In addition to the gas concentrations, the OM&M Provider also shall record the flow rate to each control device and the gas temperature and pressure for each reading. This is consistent with the requirements for general blower/flare station and control device monitoring. Specific requirements include:

1. The OM&M Provider shall be familiar with and abide by the monitoring requirements for greenhouse gas.

2. A schematic showing the monitoring points and IDs shall clearly show the general location of the monitoring points relative to blower equipment, valves, control devices (flares, leachate evaporators, continuous LFG pilots on flares, LFGE end users), and piping appurtenances such as tees to the various control devices.

3. Obtain gas quality readings using a certified calibrated instrument in accordance with the regulations.

4. Reading frequency and timeframe between subsequent readings must be in accordance with applicable rules. The OM&M Provider shall be aware of the requirement regarding number of days between readings.

    a. If readings are taken monthly, per WPWMA's standard policy, there must be at least 14 days between readings.

5. GHG readings must be obtained when the GCCS is operating. Individual control devices may be off as a course of normal operation, but the overall flow rate from the blower skid should be representative of typical extraction rates.

6. Use the site-specific GHG monitoring IDs for each control device.

7. Obtain GHG readings for all operating control devices at the same general time on a single day, and under the same operating condition. These readings should provide a "snapshot" of the operating condition at a given point in time. If a control device is offline, Contractor shall do one of the following:

    a. Create a manual entry in the LFG database for the control device that is offline using the appropriate GHG ID, and indicate in the Comments field that the unit was not in use (NIU).

8. If a control device is decommissioned and no longer in use, the OM&M Provider is responsible for changing the status of the applicable ID in the LFG database so that it is designated as abandoned or decommissioned. Readings are not required for control devices that have been decommissioned and identified as such in the database.

9. All GHG readings must include a flow rate recorded (or manually entered) as the initial flow rate, at a minimum. An adjusted flow rate may also be recorded, but at a minimum the initial

flow rate field shall be populated. This flow data is used by WPWMA for periodic data evaluation, so it is imperative that the flow rate be recorded in the initial flow rate field. The OM&M Provider shall either type into the monitoring device the flow rate reading obtained from the flow meter or manually enter it in the database.

a. Upload data to WPWMA's LFG database within 24 hours of taking the reading, and review and approve the data (or take other appropriate actions related to the data) within 48 hours of upload.

10. Flow meters shall be calibrated annually unless the flow meter manufacturer requires more/less frequent calibrations.

SECTION 6
BLOWER/FLARE STATIONS

6.1 OPERATING PHILOSOPHY

As referenced at the beginning of Section 5, WPWMA has established a standard operating philosophy for extracting LFG from its landfill.

First and foremost, there should be a single source of vacuum for the wellfield, which is the blower system owned and operated by WPWMA. WPWMA's blower system is to be the sole mechanism by which LFG is removed from the landfill and conveyed to WPWMA's flares, leachate evaporators, or other end users of the gas (e.g., LFGE facilities, etc.). The only exception to this is during a temporary outage of WPWMA's blower system, during which a LFGE plant may be allowed to exert vacuum on the wellfield until WPWMA's system is brought back on line. Other general standards are as follows:

- Header design – With a single source of vacuum, the site infrastructure must be designed and constructed to accommodate all of the LFG flow to a single point, regardless of the number of control devices or end uses of the LFG.

- Distribution of collected gas – The single blower station pushes LFG at a user-defined positive pressure to the flares and/or a delivery point from which it then travels to a beneficial end use (e.g., LFGE) project. As of July 2020 this setpoint was 16.0" w.c.

- Dual Zone Flare - The Dual Zone flare shall operate at all times at a minimum of 100 scfm. Zone A shall operate at flows ranging from 100 to 450 scfm. Zone B shall operate at a minimum flow of 450 scfm and maximum 2500 scfm. Setpoints are established to enable automatic switching between zones based on flow. The system was designed to operate automatically in conjunction with the LFGE plant engines, as well as in lieu of plant operation.

- VFDs and inlet vacuum control – Providing a consistent vacuum to the wellfield, irrespective of flow rate and end use of the gas has shown to be the most effective way to ensure stable wellfield operations, maximize LFG recovery, and minimize compliance, odor, and offsite migration issues. To this end, the WPWMA uses a dual zone flare with redundant blowers that maintains blower speed and gas throughput by controlling the blowers off discharge pressure to the LFGE facility and modulates flare flow to maintain wellfield vacuum at the flare station. The only time that inlet vacuum control is not maintained stabile by the WPWMA blower/flare station is if LFGE facility is the only control device online. Once the flare is put back into service, the blower controls must return to establish vacuum control and LFG flow. The OM&M provider shall work with WPWMA to minimize the time of the shutdown and bring the flare back on line so that full control can resume as soon as practical.

  Blower redundancy – Blower systems are to always have full redundant capacity so that if a blower is offline for maintenance or because of failure, the other blower(s) can handle the full amount of LFG that can be collected. Blowers are to be rotated in and out of service monthly at maximum so that each unit has an approximately equal number of runtime.

6.2 MONITORING MINIMUM REQUIREMENTS

The OM&M Provider shall monitor the blower/flare station at the beginning and end of each wellfield monitoring event and on other occasions as may be necessary to confirm or ensure proper system operation. In general, this shall include but may not be limited to monitoring and/or checking the following. All pressure and gas concentration readings must be taken using unique monitoring point IDs and the data must be uploaded to WPWMA's LFG database for recordkeeping and troubleshooting purposes. Other data (such as blower amps, blower hours, liquids present in the KOP, etc.) should be logged electronically in an Excel spreadsheet or other means approved by WPWMA, and WPWMA may require it to be uploaded to its LFG database.

- Remote Monitoring, Control and Alarm Systems:
  - Check that the SCADA system, including monitoring and control, and alarm system autodialer are working properly and continuously.
  - Periodically (but at least monthly) review data recorded online by the data acquisition system to ensure that data is being properly recorded, and report any problems to WPWMA.
  - Check that the system is properly recording flow rate to each flare or other control device, control device combustion temperature, and inlet vacuum to the KOP, at a minimum.
  - If the system provides email, text, and/or telephone notifications for alarm conditions, confirm the notification list programmed into the system is up to date.
    - Confirm that email addresses and phone numbers are correct.
    - Remove any of the OM&M Provider's employees who are no longer employed by the OM&M Provider or who no longer perform work at the site.
    - Review the list of individuals receiving notifications and who have access to the web-based system with WPWMA to ensure that only authorized individuals have access. The OM&M Provider shall be responsible for removing access for individuals no longer requiring access.
  - Make adjustments, as necessary, and notify WPWMA or Landfill Operations Manager if the SCADA is not functioning properly.
- Automatic Mode: Ensure the blowers and flare are operating in "Auto" mode.
  - Never allow the system to operate in "Hand" or "Manual" mode, except during short-duration testing. Operation in anything other than Auto mode is against WPWMA policy. Failure to comply with this may be cause to immediately terminate the OM&M Provider's contract.
  - If automatic mode is not working, immediately troubleshoot the system with the assistance of the flare manufacturer.
  - Electrical jumpers shall not be used to bypass Auto mode or any of the system safeties. The OM&M Provider shall immediately notify WPWMA if jumpers are found in the control panel. The flare manufacturer shall be contacted and their service technician or controls engineer shall remove any jumpers, correct the wiring, and ensure proper system operation. If it is determined that the OM&M Provider is responsible for the jumpers or modifications to wiring, the OM&M Provider shall reimburse all costs related to flare manufacturer's service call(s) and engineering support.
- Blower Station/Prime Mover Inlet:
  - Measure the gas composition and negative pressure at the inlet of the blower station/prime mover. The flow rate corresponding to this location shall also be stored with the reading. This flow rate may be read from the blower station control panel.
    - The location of the measurement shall be representative of the negative pressure applied to the main GCCS header.

- BFS Condensate Sump Maintenance
  - The pump at the condensate sump located at the BFS may need to be inspected and/or repaired while the GCCS is operational the following steps shall be taken prior to removing the pump for safety and to reduce risk of air intrusion into GCCS:
    1. The LFGE Plant Operator shall be notified of inspection being performed.The isolation valve on the west side of the condensate vault shall be closed.
    2. The pressurized air, equalization and condensate discharge line valves shall be closed.
    3. Safely remove pump for inspection.
    4. Reinstall pump and open valves.
- Condensate Knockout Pot (KOP):
  - Differential pressure across the KOP demister pad.
    - If pressure gauges are present, check the zero of each gauge to ensure the measured pressure is correct before recording a reading.
    - If differential pressure exceeds 3 inches of water column (in-w.c.), the OM&M Provider shall clean the demister pad. In general, the demister pad should be inspected and cleaned as needed.
  - Liquid level in the KOP.
    - Open the inlet and outlet valves of the liquid level sight glass in order to identify if liquid is present in the KOP.

- Blower Inlet/Outlet Pressure:
  - Record inlet and outlet pressure of each operating blower.
    - Note that these are the pressures <u>immediately at the inlet and outlet of the blower, before any valves, fittings, etc</u>. These are the true operating pressures of the blower and are needed in order to confirm the blower is achieving the flow and pressure shown on the blower curve. If pressure readings are instead taken at, say, the inlet of the blower skid and inlet of the flame arrestor, the readings will not be representative due to pressure losses. For example, it is common to have 5 to 10 in-w.c. pressure loss between the inlet of the blower and the inlet of the KOP.
- Blower Amps: Check and record blower amps. If amperage is excessive, begin troubleshooting blower operation.
- Blower Vibration: Note any excessive vibration and report to WPWMA or Landfill Operations Manager so that the blowers may be serviced.
- Blower Hours: Record the hours of blower operation (totalized) displayed at the blower station control panel.
- Flow Meter: Confirm that the flow meter is properly aligned. The OM&M Provider shall periodically clean the flow meter element in accordance with the manufacturer's recommended frequency or site-specific needs to ensure accurate flow rate readings.
- Flame Arrestor:
  - Measure the differential pressure across the flame arrestor.
  - If ports are not installed, the OM&M Provider shall install monitoring ports that are compatible with the ports on the wellheads.
  - If the drain port on the base of the flame arrestor is piped to a condensate drain line, open the valve to remove built-up condensate.
  - If the drain port is not connected to a hard-piped drain line, the OM&M Provider shall coordinate with WPWMA to have a drain line installed. Condensate shall not be drained onto the ground or concrete pad.

  - If differential pressure exceeds 2 in-w.c., the OM&M Provider shall notify WPWMA and clean the flame arrestor element.
  - If the flame arrestor requires cleaning more than once per year, the OM&M Provider shall coordinate with WPWMA to identify the reason for the fouling and attempt to remediate it.
- Enclosed Flare Operating Temperature:
  - Performance tests are required for enclosed flares (the frequency of testing varies by regulatory agency and permit). The OM&M Provider shall obtain the minimum temperature at which the flare is required to operate from WPWMA and air compliance consultant and enter the appropriate flare shut down set point temperature into the control panel. When the flame temperature drops to this level, the flare will shut off and trigger an alarm. This ensures that the flare does not operate below its permitted temperature.
  - Flare controls should be set to automatically select the appropriate thermocouple based on LFG flow rate or other parameter defined by the flare manufacturer.
  - Thermocouples should not be set on manual selection unless specifically directed by the flare manufacturer and agreed by WPWMA and the Manager, Landfill Gas Operations.
- Enclosed Flare Inlet:
  - Record the pressure measured between the outlet of the flame arrestor and the inlet of the enclosed flare stack.
    - If pressure exceeds 3 in-w.c., notify WPWMA of the need to clean the burner tips.
    - If they are clogged or partially clogged, burner tips shall be removed and cleaned per manufacturer recommendations. The OM&M Provider shall not leave the burner tips in place and pressure wash debris back into the burner manifold (i.e., back-flush them).

- Enclosed Flare Shell Temperature:
  - At least once per quarter, measure the temperature of the outside shell of the enclosed flare on a 10' grid and at all visible paint color changes or other suspicious areas using an infrared gun with an appropriate range to determine if there are any "hot spots" or areas of potential burn-through.
  - Notify WPWMA of the presence of any hot spots so that inspection and repair of the insulation may be performed.
- Enclosed Flare Shell Condition:
  - Note whether burn-through or significant corrosion is visible on the outer shell and immediately report it to WPWMA so that troubleshooting and repair can be performed.
  - Annually, shut down and visually inspect the flare internal lining for refractory conditions and photo document.
- Electronic Chart Recorder:
  - Check that the chart recorder is properly recording flow rate to each flare or other control device, control device combustion temperature, and inlet vacuum to the KOP, at a minimum.

  The OM&M Provider shall be responsible for understanding the proper way to download data and ensure that the recording function is working and no data is not lost during the data transfer/review process.

6.3 PRIORITY OF DATA RECORDERS

WPWMA's standard for which data recorders take priority for regulatory compliance is as follows:

1. Electronic chart recorders

2. SCADA recorders

This prioritization is in place due to regulatory reporting considerations and features available in some equipment.

6.3.1 Remote Data Acquisition Systems

WPWMA does not have a written operations manual for its SCADA system. OM&M Providers must understand the operation of the system because of the value it brings in terms of quick visibility of operations data and troubleshooting information for technicians, project managers, and flare manufacturers. The WPWMA will provide annual training on the SCADA system to the OM&M Provider upon request. WPWMA's LFG Operations Manager can be consulted regarding features and past performance and track records of the various systems.

6.4 RESTRICTION ON MODIFYING CONTROL PANELS

Only the flare manufacturer is authorized to perform work inside blower and flare station control panels at the site. Consultants, OM&M Providers, LFGE developers or plant operators, or any other party is prohibited from performing any wiring modification, modifying touchscreens (also known as operator interface panels or OIPs), replacing or modifying PLCs, modifying controls logic, or any other work inside control panels without the express written consent of the flare manufacturer and approval from WPWMA.

SECTION 7
SUBSURFACE GAS MIGRATION MONITORING

7.1 GENERAL

The requirements for gas migration monitoring (e.g., methods, frequency, monitoring locations, compliance triggers, etc.) vary by regulatory agency and permit, and therefore, site-specific monitoring plans and protocols typically are required or recommended. This section of the SOP highlights minimum standards for gas migration monitoring at WPWMA landfills; more stringent requirements dictated by site permit, regulations, or site needs take precedent over these minimum standards.

7.2 SITE-SPECIFIC MONITORING REQUIREMENTS

Prior to beginning work at a site, the OM&M Provider shall obtain the following from WPWMA:

- Copy of the permit that includes the gas migration monitoring requirements and compliance thresholds.
- List and site map showing locations required to be monitored (probes and on-site structures).
- List and map of any off-site structures requiring monitoring.

It is imperative that the OM&M Provider has up-to-date information on which probes and structures are required to be monitored, as this can change over time due to landfill footprint expansions, regulatory agency action, construction of new buildings or other structures on the property, or other situations. For this reason, the OM&M Provider shall request updates to the monitoring plan and monitoring requirements each calendar quarter before monitoring. Or at the monthly meetings.

7.3 MONITORING PROBE CONSTRUCTION

While the construction details of probes is based on engineering design and regulatory requirements, the OM&M Provider is responsible for ensuring that each probe is capped and has a labcock or quick-connect monitoring port.

Static pressure in a probe is an important parameter for gas migration evaluation purposes. Probes cannot be sampled by removing a cap and slipping a sampling tube down into the probe. All probes must be capped and have an acceptable monitoring port installed. Hose barb fittings with no inline valves are not permitted on monitoring probes because built-up pressure in the probe can escape between the time the barbed fitting's cap is removed and the sampling hose of the instrument is attached. If probe piping is not capped or the caps do not have labcock or quick-connect monitoring ports, the OM&M Provider shall work with WPWMA to install these items.

Probe caps should incorporate a means to potentially take liquid levels in the probes. Therefore, caps should be threaded and not glued. Alternatively, the cap may have a port or bushing that allows a liquid level meter probe to be inserted down the probe. Note that liquid level meters that have been used for LFG extraction well liquid level measurements must never be used in groundwater wells or gas probes, as they can introduce contaminants to groundwater or the surrounding soils.

7.4 TIMELINE FOR MONITORING

Gas migration monitoring shall be performed in the first or second month of the quarter, as determined by WPWMA. However, monitoring frequency may be adjusted as directed by WPWMA or a regulatory agency as needed.

7.5 MONITORING PROCEDURES

Unless more stringent requirements are provided in the site-specific monitoring plan or regulations, the OM&M Provider shall adhere to the following:

1. Data collection and handling requirements for gas migration monitoring are consistent with the requirements for wellfield monitoring.

2. Calibrate the gas monitoring instrument as described in Section 5. All calibrations shall be stored in the instrument and uploaded with the rest of the monitoring data to WPWMA's LFG database.

The OM&M Provider must also be aware of all regulatory thresholds for gas concentration prior to performing any monitoring and enter those thresholds into the monitoring device and LFG database to be automatically verified upon data entry.

7.5.1 On-Site Structure Monitoring

On-site structures required to be monitored include the scale house, office buildings, maintenance garage, etc. Non-enclosed structures such as pole barns may be exempted from monitoring if sufficient natural ventilation is present, regulations permit the exemption, and approved by WPWMA and LEA.

If in-place explosive gas monitors are installed in sufficient locations inside structures, monitoring with handheld instruments may not be necessary, if allowed by permit. If permanent monitors are installed, the OM&M Provider shall document the locations of the meters on the floor plan/site map included with the written report to WPWMA and shall perform manufacturer recommended checks/calibrations on the in-place monitors to ensure proper operation.

1. Use site-specific monitoring IDs for all structures and calibrations in accordance with Section 5.5.1.

2. Calibrate the gas monitoring instrument as described in Section 5.8.3. All calibrations shall be stored in the instrument and uploaded with the rest of the monitoring data to WPWMA's LFG database.

3. Hold sample tubing approximately 4 inches from the floor.

4. Monitor:
    a. Along each floor/wall interface
    b. Inside ground level cabinets
    c. Inside closets
    d. At floor drains and plumbing penetrations
    e. Along cracks in concrete slabs

5. The technician shall be aware of the instrument's response time when conducting monitoring and factor this in when investigating detections of methane, especially those that are intermittent or instantaneous/fleeting.

7.5.2 Probe Monitoring

1. Use site-specific monitoring IDs for all structures and calibrations in accordance with Section 5.5.1.

2. Calibrate the gas monitoring instrument as described in Section 5.8.3. All calibrations shall be stored in the instrument and uploaded with the rest of the monitoring data to WPWMA's LFG database.

3. Operate the meter in accordance with the requirements defined in Section 5.8.6, except related to pressure measurement as described below.

4. Do not purge the probe before monitoring. Any methane detected during monitoring shall be reported, as described below.

5. Zero the pressure transducers and attach the instrument hose to the monitoring port. If a labcock valve is installed on the probe cap, open the valve after attaching the hose and observe the relative pressure.

6. Record the initial pressure in the instrument.

    a. Continue to observe the pressure and note any changes.
    b. Record the final stabilized pressure (Note: Probe pressure must be measured before sampling for gas qualities because turning on the instrument's pump while connected to the probe may change the static pressures within the probe.

7. Measure gas qualities as described in Section 5.5. Continue to run the instrument's pump and record the reading when the methane concentration (if detected) has stabilized.

8. Store the stabilized gas reading.

Notify WPWMA immediately if any reading is above 5% methane (100% LEL) by volume.
Provide monitoring report that complies with Section 12.

7.6 REPORTING

The OM&M Provider shall immediately notify WPWMA if any non-zero methane value is detected in any on-site structure (and off-site structure if required to be monitored) so that steps may be taken to protect building occupants. WPWMA shall also be notified by phone or email at the end of the monitoring event if methane exceedances were detected in any of the probes so that any regulatory notifications or remedial actions can be coordinated.

Unless a faster turnaround time is required by WPWMA or regulatory agency, the OM&M Provider shall submit a report detailing the monitoring results to WPWMA within two weeks of the end of each quarterly event. The report shall include the following:

- Brief summary of monitoring event

- Monitoring results
    - Calibration data
    - Static pressure and gas concentration for probes
    - Gas concentrations measured in on-site structures
    - Confirmation that in-place explosive gas meters were checked for proper operation (either by landfill personnel or OM&M technician)
- Identification of any regulatory exceedances
- Site map showing monitored locations
- Summary of any probes that need repair or replacement due to damage

SECTION 8
SURFACE EMISSIONS MONITORING

To comply with NSPS regulations (40 CFR 60.755(c)(1)), the EG, and the California Landfill Methane Rule (LMR) or other state or local regulations that may require it, surface emissions monitoring (SEM) shall be performed quarterly. This monitoring is intended to identify fugitive LFG emissions, but also acts as a GCCS performance test allowing WPWMA to evaluate areas of the collection system that may require upgrades or modifications to further minimize surface emissions.

This section addresses the SEM method required by NSPS/EG/LMR regulations. The OM&M Provider shall review the site-specific monitoring plan and determine the appropriate SEM method and procedures that are required during each quarterly event.

Please refer to Appendix B – Surface Emissions Monitoring Plan Dated July 29, 2013

SECTION 9
LIQUID LEVEL MEASUREMENTS

In order to maximize the efficiency of the vertical LFG extraction wells, WPWMA requires periodic liquid level measurements to aid in evaluating the wellfield.

Also, the OM&M Provider shall establish a baseline liquid level measurement for each new GCCS and for all new wells within the first 2 weeks of well operation.

9.1 OVERVIEW OF LIQUID LEVEL EVALUATION PROCESS

WPWMA's program of evaluating liquid levels in LFG extraction wells is designed to account for the following 3 scenarios, and the calculations are set up to be valid whether or not there is an obstruction in the well casing.

- Scenario A – Obstruction, pinch, or silt in the bottom of the perforated pipe section, and liquid level is beneath the top of perforations.

- Scenario B – Obstruction, pinch, or silt in the bottom of the perforated pipe section, and liquid level is above the top of perforations.

- Scenario C – Obstruction, pinch, or silt is above the top of perforated pipe section. (i.e., 100% obstructed perforations).

9.1.1 Basis of Calculations

The calculations are based on:

- Elevation of the top of perforated pipe
- Length of perforated pipe
- Total length of pipe below ground surface at the time of well installation
- Ground surface at the time of well installation
- Current ground surface elevation
- Field measurements of top of casing (TOC) to ground surface, TOC to liquid, TOC to bottom of well or any obstruction in the well.

Note: *Because the calculations use the elevation of the top of perforated pipe and the elevation of the bottom of the well pipe at time of installation, accurate as-built information is imperative.*

9.2 MEASUREMENT FREQUENCY

Liquid levels shall be measured in GCCS wells annually, as needed or directed by WPWMA if data indicate liquids are impacting gas extraction rates or if the data is necessary to aid in more aggressive troubleshooting, pursuant to the approval by WPWMA. The WPWMA may omit wells from water level monitoring list if prior measurements showed minimal water or change in water levels.

9.3 EQUIPMENT SPECIFICATIONS

At present, the preferred and most common method for measuring liquid levels is to use a down-hole electrical conductance probe with an indicator tape, as described below. The WPWMA may use a down-hole camera if the conductive probe is yielding unrepeatable or questionable results.

To maintain measurement consistency between monitoring events, the user must measure liquid levels from the same point of the well every time (i.e., top of casing, north side, i.e. towards the flare). To account for changes in top of casing elevation over time, WPWMA requires a ground surface elevation and measurement of the height of the top of casing above ground surface.

Note that it is imperative that any liquid level measuring devices used in LFG extraction wells or any portion of the GCCS must be dedicated to leachate and LFG well monitoring. To avoid potentially cross-contaminating soils and groundwater, they must never be used for groundwater well or perimeter gas migration monitoring probe measurements.

9.4 PREPARATION

In preparation of performing liquid level measurements and the related evaluation, the OM&M Provider shall compile as-built information for the wells and current ground surface elevations for all wells (or approximate ground surface elevations based on interpolation of the most recent survey data or field observations if waste filling or other activities have altered ground surface elevations since the date of the most recent survey).

The OM&M Provider shall document field measurements electronically (e.g., web form) or in a log book from which data will be copied to the LFG database at the completion of the field work.

9.5 LIQUID MEASUREMENT PROCEDURE

When preparing to take a liquid level, the technician should:

1. Measure the static pressure in the well and record it so the well can be returned to its prior state after completing the liquid level measurements.
2. Close the wellhead valve. This is particularly important for landfills with an LFGE project.
3. Remove the wellhead or open the access port.
4. Measure and record the depth to liquid from TOC using the liquid level indicator.
    a. Problems that may be encountered:
        i. Foam in the well may cause inaccurate measurements
            1. Mark in field notes “Foam present, liquid level will have to be visually verified using other method” (down well camera).
5. Obtain and record the depth to bottom of well measurements
    a. Measurements are to be made from the TOC to the point where the probe will not progress any farther.
    b. Problems that may be encountered:
        i. Well has soft bottom due to silt or other material.
            1. Record in field book “soft or silty bottom, depth cannot be verified and is estimated”.
            2. A down well camera can be used to attempt to verify well bottom. This activity must be approved by WPWMA before proceeding (non-routine work item).
        ii. Probe may not extend to anticipated well casing depth.

1. Well may be deflected underground so much that indicator probe cannot reach bottom of well casing.
2. Well may be pinched.
3. Probe may be hung up on weld or coupling.
4. Probe may be snagged on a pump component.
5. A down well camera can be used to identify what is holding up the indicator probe. This activity must be approved by WPWMA before proceeding (non-routine work item).

iii. Well appears to be deeper than anticipated.

1. This may be because the well was extended to accommodate additional waste filling.
2. A down-well camera can be used to determine actual depth of well and how much solid pipe was installed to accommodate landfill operations. These activities must be approved by WPWMA before proceeding (non-routine work item).

6. If it was removed, reinstall the wellhead, open the wellhead valve back to pre-measurement static pressure, and record the stabilized static pressure in the log book.

9.6 DATA MANAGEMENT

Liquid level data will be managed by WPWMA and must be compiled within one month of completing liquid level measurements. As described below, two sets of data are required to be uploaded and maintained by the OM&M Provider (As an extra non routine service) unless WPWMA assigns the responsibility to the LFG design consultant or other consultant.

9.6.1 Site Build/As-Built Data

As-Built data that must be entered into the system (or related spreadsheets) includes:

- Well Name (e.g., W-104)
- Well ID (e.g., LivW0104)
- Ground surface elevation at time of well installation
- Depth to bottom of casing at time of installation
- Perforated pipe length

9.6.2 Field Measurements and Related Data

Information obtained at the time of liquid level measurements includes:

- Well Name
- Well ID
- Date of measurement
- Name of personnel obtaining measurements
- Ground surface at well at time of measurements
- Measured height of TOC above ground surface
- Depth from TOC to liquid
- Depth from TOC to bottom of well
- Whether a pump is installed in the well
- Depth from TOC to top of pump

SECTION 10
STARTUP PROCEDURES FOR NEW LFG COLLECTORS

10.1 NEW LFG COLLECTOR INSTALLATION AND STARTUP

10.1.1 Replacement Wells/Collectors

During construction of a GCCS expansion, the OM&M Provider shall maintain regular communication with WPWMA so that valuable information can be shared between all parties, and so that all required wellhead readings are obtained.

During some GCCS construction projects, wells may be abandoned or decommissioned. This communication and coordination is particularly important when an existing LFG collector is slated to be abandoned and a replacement collector will be installed. To avoid potentially missing monitoring for a well that is to be abandoned or decommissioned, the OM&M Provider shall communicate with WPWMA, air compliance consultant, and CQA Consultant during any construction project so that all parties are aware of the monitoring schedule. Only after the OM&M Provider and air compliance consultant have confirmed that the well no longer needs to be monitored may it be abandoned or decommissioned. The current well status shall be updated in the LFG database.

In this situation, it is imperative that initial readings and rechecks are performed before a well is abandoned. Once the required readings and rechecks are obtained, the OM&M Provider shall notify WPWMA, who in turn will notify the CQA observer and construction contractor that the well may be taken offline and abandoned and the new well connected to the collection piping.

10.1.2 Startup Procedure for New Collectors

Before bringing a well/collector online, establish its baseline conditions by obtaining the following information:

- Pressure – Wellhead static pressure with wellhead valve closed
- Temperature – in deg. F
- Gas quality – CH_4, CO_2, O_2 and balance gas
- Liquid levels – Depth to liquid and depth to bottom of the well

After recording baseline conditions and coordinating with the LFGE, slowly bring the well on line:

1. Be careful to avoid making aggressive adjustments to new wells/collectors.
2. Bring the collector on line during a scheduled monitoring event unless other conditions such as regulatory deadlines, the need to increase LFG collection for odor control, etc., warrant a sooner startup.
3. Adjust the wellhead valve so that the wellhead static pressure is set at 0.0 in-w.c. This allows gas to flow, but does not exert a vacuum on the well.
    a. If the methane concentration in the new well/collector falls below the WPWMA SOP methane target (see Section 4.3), close the wellhead valve and an investigation shall be performed to determine why poor gas quality is present at such a low flow rate. Items that should be investigated include but are not limited to:
        i. Amount of well screen available (liquid levels),

ii. Well bore seal condition,
iii. Visual inspection of wellhead and sample train for air leaks, etc.

Notify WPWMA of issues that are identified and propose a remedy. Once the issues are corrected, return the well to operation.

4. Allow the well/collector to stabilize for at least 1 hour and conduct other monitoring. Ensure nearby wells are operating in a manner that is consistent with typical or expected conditions.
5. Return to the well/collector after at least 1 hour and adjust the wellhead static pressure to -0.1 in-w.c.
6. During the next monitoring event (at least 1 week later), depending on gas quality, the wellhead static pressure may be adjusted down to -0.5 in-w.c., based on the professional judgment of the OM&M Provider. Recheck the well/collector 1 to 2 hours later to ensure that the reduction in wellhead static pressure has not negatively impacted gas quality.
7. Additional wellhead adjustments can be made in accordance with the procedures outlined in Section 5 during subsequent monitoring events, if necessary.

10.2 NEW GCCS STARTUP

Starting up a new system requires more effort and diligence than maintaining an existing system. During a new system startup the focus must include:

- Comparing the GCCS Record Drawings with the construction plans and permit plans to determine what has been installed and what variations, if any, have been made from the original design intent.
- Inspecting the system for construction issues (hoses tight, couplers tight, sample ports properly installed, wellhead properly installed, boot clamps tight, if equipped, etc.).
- Establishing the wellfield's operating gas composition and baseline flow rate.
- Preparing the system for operation.
- Bringing the system online. This should be done slowly without damaging mechanical components or biological activity within the landfill.
- Determining the capability of the system and defining its operational parameters.

Note that after the initial test of operation, the OM&M Provider shall bring the system back down and check all fittings, joints, and connections, including bolts, nuts, and clamps. Torque all fasteners to the manufacturer's recommendations. Also, inspect all electrical components for proper operation. Check all electrical connections and confirm that all components and connections remain intact and have not worked loose.

10.2.1.1 LFG Collection System Component Inspection

A. Header isolation valves
   a. Exercise valves to verify full range of motion.
   b. Position header valves in 100% open position for startup.
   c. After startup, return to the valves and confirm that the same negative pressure exists on both sides of each open valve. If the pressures differ, determine whether the valve indicator has been installed correctly and perform additional troubleshooting if necessary.

   d. Notify WPWMA if any header isolation valves are not labeled so that the construction contractor or others can complete this.

B. Header access risers
   a. Inspect cam-locks, monitoring ports, and fittings and ensure they are securely in place. Tighten any loose fittings or sampling ports.
   b. Notify WPWMA if header access risers are not labeled so that this can be done.

C. Drip legs
   a. Verify that each drip leg has the correct amount of water in the u-trap.
   b. Verify caps and flanges are tight.
   c. Verify that monitoring ports are installed on both legs of the u-trap.

D. Mechanical sumps
   a. Inspect fittings and gaskets. If any are found to be loose or missing coordinate with WPWMA for repairs.
   b. Verify that the condensate force main valve is open and ready to accept liquids.
   c. Verify pump is energized and functional.
   d. Record cycle counts for pneumatic pumps and hour meters for electric pumps.

E. Wellheads
   a. Tuning valve – Exercise valve and verify full range of operation.
   b. Flex hose – Verify length, adjust if needed, and verify that clamps are tight.
   c. Sample ports – Inspect for broken or plugged fittings and replace, if necessary.

F. Well bore seals and liner boots
   a. Notify WPWMA or Landfill Operations Manager if well bore has settled or seal appears to be broken.
   b. Verify that all connections between liner boots and wells/other piping are sealed tight, and notify WPWMA of any deficiencies.

SECTION 11
DATA MANAGEMENT, HANDLING, AND REPORTING

11.1 DATA MANAGEMENT AND HANDLING

Proper management of field data is critically important. Manipulation or misrepresentation of field data is a violation of the Clean Air Act, **will not be tolerated, and may be grounds for contract termination, or subject to addition criminal investigation.**

The OM&M Provider's data management team and/or project manager (or WPWMA if OM&M work is performed by internal WPWMA technicians) are required to review, approve, and analyze all collected data in order to bring to the attention of WPWMA any issues of concern and to identify areas where improvements are needed. Issues and updates shall be communicated verbally, by e-mail, and in monthly meetings and reports. The OM&M Provider is also responsible for certain data management administrative tasks, which are outlined below. The following text outlines WPWMA's expectations regarding data management and reporting.

11.1.1 Data Management Responsibilities

The OM&M Provider is responsible for the following data management tasks to the extent it collected that data. If the APCD or WPWMA collected the data or a portion of it, that entity shall be responsible for managing and reporting that data unless other arrangements are made.

- Updating Site Build information, including well construction details, monitoring point coordinates, etc.
- Maintaining Point IDs
- Reviewing data
- Revising erroneous data within the database
- Approving data to lock data from additional editing
- Maintaining, updating, and tracking alternative operating values and alternate compliance timelines within WPWMA's LFG database.
- Administering user permissions within WPWMA's database for users that have access to a facility's data and periodically checking to ensure that all users with access are appropriate. If users are found to no longer require access (e.g., they are no longer employed by the firm, no longer perform work at the site, etc.), the responsible individual must remove those privileges.
- Adding new users with the appropriate level of user access according to the requirements established by WPWMA. User information must include the following, at a minimum:
    - Name
    - Company
    - Position/Title
    - Email address (A company email address is required. No user may have, for example, a gmail.com, yahoo.com, or similar email address.)
    - Telephone number

11.1.2 Data Handling

Each day's monitoring data shall be uploaded to the database within 48 hours of collection. Data files from the monitoring instrument or data recorders (e.g., flare station electronic chart recorders)

may not be sorted, edited, or otherwise modified before uploading to the database. Data edits must only be made within WPWMA's LFG database.

11.1.3 Electronic Data

Electronic data shall be handled in such a way that data integrity is maintained. The OM&M Provider is responsible for backing up all WPWMA data not entered into WPWMA's LFG database on a regular frequency (minimum monthly back-up). All data and reports are the property of WPWMA and will be relinquished to WPWMA upon request or at the close of the project.

11.1.3.1 Preservation of Raw Data Files

Data files from GCCS monitoring events shall be downloaded from the gas monitoring instrument and then uploaded directly to WPWMA's LFG database. **Raw data files from monitoring equipment shall not be altered in any way.** If there are known errors in the data, they are to be edited within the database so that there is a record of the change and documentation of the reason for the edit(s). Because the database has this feature, there is no reason to view, sort, or modify the raw data file in any way before uploading it to the system. **Failure to follow this directive may be cause for termination of the OM&M Provider's contract.**

OM&M Providers are encouraged to retain copies of unaltered data files for their records.

11.1.3.2 Data Upload

Wellfield monitoring data (including blower/flare station, gas migration monitoring, etc.) shall be uploaded to WPWMA's LFG database within 48 hours of monitoring. If a monitoring event spans multiple days, each day's data shall be uploaded within 48 hours of collection (resulting in multiple uploads).

11.1.3.3 Loss of Data

If all of the data from a monitoring event is corrupted, lost, or is unusable, the OM&M Provider will immediately re-monitor the entire wellfield. If data from certain wells is corrupted, lost, or is unusable, the wells for which data are lost must be re-monitored immediately.

11.1.4 Written Log Book Data

In an effort to record conditions that cannot be stored electronically within the monitoring instrument, field technicians are required to keep a site-specific logbook. This logbook is the property of WPWMA, and will be relinquished to WPWMA upon request. The log book must be accessible to the OM&M Provider and WPWMA at all times, as it may be used as a reference for troubleshooting wellfield issues.

A. Logbook requirements:
    1. Waterproof book,
    2. Record entries in logbook using waterproof ink.

B. Requirements for recording data in log book:
    1. Do not remove pages or portions of pages.
    2. Use one log book
    3. Date each page in the top right hand corner.
    4. Technician recording data shall initial each correction.

5. Cross out blank lines on a page when the page is completed.
6. Do not go back to previous pages and insert comments or additional measurements. Always use a new page for each event.
7. Record the following, at a minimum:
   a.) If maintenance is performed, write a description of maintenance performed.
   b.) Record non-tuning efforts for NSPS/EG 5-day corrective actions. Examples include: tighten flex hose, replace sample port, call contractor to regrade header, increase flare vacuum to field, etc.
   c.) Date, time on- and time off-site
   d.) Unusual conditions
   e.) Erosion areas
   f.) Surface depressions
   g.) Document damage to wellheads and/or surrounding surface area discovered during monitoring event or repairs completed during event;
      i. Take photographs of damage and repairs,
      ii. Describe damage,
      iii. Forward photographs of any well that appears to have been damaged by landfill operations to WPWMA within 48 hours.
   h.) Pump cycle counts, if not recorded otherwise in the gas monitoring instrument or other device.
   i.) Summary of discussions with site personnel
   j.) Other pertinent information that in the technician's judgment may be useful at a later date
   k.) Recommendations for non-routine system repairs or upgrades to the GCCS
   l.) Hand drawings that identify specific locations or distances from wellfield components.
8. When the book is full, submit it to WPWMA and start a new logbook.

11.1.5 Data Review

Both the technician and project manager (or WPWMA manager if work is performed by WPWMA personnel) are required to review the data for completeness and accuracy, to identify erroneous or questionable data that may require further action, and to identify exceedances that require corrective action. The technician shall review the data upon upload (i.e., within 48 hours of taking the readings) and the OM&M project manager shall review the data within 120 hours of upload.

If any erroneous data are identified, such as incorrectly typed readings or comments (such as flow rate or temperatures that are entered manually while storing the data), the erroneous readings must be edited within WPWMA's LFG database so that there is a record of the change. The database will prompt the user for a brief explanation of the reason for the edit, and then both the explanation and revised data will be stored.

11.1.6 Data Approval

The technician shall check the uploaded data for correctness and completeness. The designated Data Approver shall then review and approve or take other appropriate actions related to the data within 120 hours of data upload. All data handling, approval, etc., shall be in accordance with WPWMA's Standards and other WPWMA policies that may be implemented in the future. The OM&M Provider shall coordinate with the air compliance consultant, as required, to ensure compliance dates are not missed.

- Coordinating with the LFG database support staff, as necessary to meet WPWMA's requirements.

- Ensuring that the OM&M Provider's staff participates in training sessions that will periodically be required by WPWMA.

11.2 REPORTING AND MEETINGS

All data and monthly and quarterly reports are to be submitted to WPWMA electronically. Hardcopies may also be required at the discretion of WPWMA or to satisfy regulatory agency requirements. The OM&M Provider's technicians, project manager, and other pertinent team members will be provided access and log-in information for the database.

Monthly reports generated as part of this work are to be submitted to WPWMA personnel only, unless otherwise directed by WPWMA. These reports are intended to keep WPWMA personnel informed about the current condition of the GCCS. These documents will be retained for historical reference, and placed in the site's operating record to comply with regulatory requirements.

11.2.1 Daily Logs

The OM&M Provider shall submit Daily Logs of completed activities to WPWMA Landfill Operations Manager at the end of each day or each work week if performing multiple days of work at the site.

11.2.2 Monthly Reports

The OM&M Provider is required to submit a monthly report to WPWMA by the 20th of every month, unless WPWMA requests the report by a different date, for data collected and routine and non-routine work performed during the prior month. At a minimum, reports must include the following:

- General summary of operations of the previous month. Report text shall not include editorializing; the focus shall be on the data, observations, and recommendations.

- Wellfield data
    - Data table for the most recent monitoring, highlighting any NSPS/EG and SOP exceedances. Data table shall include the following:
        - Gas quality data (CH_4, CO_2, O_2, and balance gas)
        - Gas pressures (static, differential, system)
        - Gas temperature in degrees Fahrenheit
        - Flow rate in scfm
        - Comments stored in the instrument for the reading
    - Monitoring summary addressing NSPS/EG thresholds and any surface emissions and gas migration monitoring conducted.
        - List of wells/collectors with NSPS/EG/LMR exceedances

- Liquid level data (if measurements taken that month)
- SEM data and/or gas migration monitoring data (if monitoring was performed that month)
- Blower/flare station
    - Gas composition and flow rates overall and for each control device

  - General operational issues
  - Maintenance activities performed
  - Maintenance activities planned or needed in upcoming month

- SSM forms
- Changes in wellfield conditions that are significant or of concern. This includes an evaluation of trends and variations in data over time.

- Logs and equipment checklists
- Recommended repairs

The report shall include all the monitoring data, checklists, logs, SSM forms, and other supporting information regarding GCCS operations and maintenance. Wellfield monitoring data shall be tabulated and presented in the same general format as output from WPWMA's LFG database.

These reports shall be submitted to WPWMA and other designated parties (air compliance consultant, design engineers, etc., as directed by WPWMA) by the 20th of the following month, unless an alternate schedule is requested by WPWMA. Timeliness of the data is paramount, as WPWMA and other team members will use this data to identify trends and to recognize operational adjustments needed to optimize system performance. In addition, the data may be necessary to satisfy NSPS reporting requirements that have firm deadlines.

11.2.3 Quarterly Reports

The OM&M Provider shall also prepare and submit to WPWMA quarterly gas migration and SEM monitoring reports as detailed in Sections 8 and 9, respectively.

11.2.4 Monthly SOP Meetings

A monthly meeting is required. At a minimum, WPWMA and OM&M Provider's project manager and technicians shall attend. Except for extenuating circumstances, the lead technician shall attend the meeting at the site in person unless directed otherwise by WPWMA. Others who may be invited by WPWMA and whose attendance may be beneficial include:

- WPWMA's Landfill Operations Manager
- Air compliance consultant
- Landfill gas energy project developer (for sites that have a LFGE project in operation)
- Design consultant (if issues related to design or construction are to be discussed)

WPWMA shall:

1. Determine the meeting location and whether the meeting will be held in person or via a conference call with a web-based presentation by the OM&M Provider.
2. Either set the meeting agenda or have input on what topics and the depth of content that will be covered during the meeting. Topics of discussion may include:
   a. Most recent monitoring results and rechecks or corrective actions planned or taken.
   b. NSPS compliance and status relative to operational goals.
   c. Wellfield maintenance recommendations/status, including pump maintenance
   d. Well raisings
   e. SSM summary

f. Blower/flare operation
g. Cover integrity inspections
h. Surface emissions monitoring
i. Gas migration monitoring (probes and on-site structures)

This list is provided for illustrative purposes only. WPWMA and OM&M Provider are free to develop an agenda that is site-specific or most appropriate for the site's needs.

The OM&M Provider shall:

1. Prepare graphs, maps, and tables as needed for use during the meeting, the content of which shall be discussed with and approved in advance by WPWMA.
2. Take notes summarizing the meeting and distribute to the group.

Meeting attendees will review recent and historical data, database maps and graphs of interest, and other pertinent metrics, data, schematics, etc., that may be necessary to describe and evaluate the data and system operation.

11.3 SSM DOCUMENTATION

Startup, Shutdown, and Malfunction (SSM) Plans are required for all NSPS/EG sites under the NESHAP (National Emission Standards for Hazardous Air Pollutants) regulations.

The OM&M Provider shall be familiar with the requirements of the SSM Plan and shall complete the required SSM forms for SSM events that occur when its OM&M technicians are on site. This includes any forced shutdowns performed in order to check fail-safe operation of the blower/flare system or to perform maintenance on the blower or flare system. Forms shall be prepared and submitted to WPWMA and air compliance consultant with the monthly monitoring report or more frequently if requested. The OM&M Provider shall note on the appropriate form whether any actions were taken that were not consistent with the SSM Plan.

For SSM events that occur when the OM&M Provider is not on site, WPWMA and site personnel will ensure the proper forms are filled out. Any questions related to SSM requirements should be directed to WPWMA.

SECTION 12
SUBSURFACE OXIDATION EVENTS

Because subsurface oxidation (SSO) events are serious situations that could potentially damage large areas of the landfill, generate odors, and create community concern, discovery of an SSO must be immediately reported to WPWMA and the Landfill Operations Manager and immediate steps must be taken to remediate it and minimize its impact on the GCCS and landfill.

12.1 SYMPTOMS

The following symptoms are indicative of an SSO:

- Dramatic localized landfill settlement
- Charred or cracked surface cover
- Stressed or dead vegetation in an area that is otherwise properly vegetated
- Smoke or smoky odor emanating from the landfill surface or wellhead
- Drastic or unusual increase in flowing gas temperature
- Significant drop in methane content in the gas
- Abnormal discoloration of wellhead/riser assembly
- Abnormally high CO and ammonia (NH_3) concentration in LFG
- Deformed riser pipes

12.2 NOTIFICATION

If any of the signs of a potential SSO are detected, WPWMA and Landfill Operations Manager shall be immediately notified.

12.3 INITIAL INVESTIGATION

An initial investigation of the situation should include the following:

1. Health and Safety

    a. The first step in investigating a suspected SSO must be to ensure the proper health and safety measures are in place.
    b. A number of additional hazards may be present when an SSO occurs, including exposure to hazardous compounds in smoke or fugitive gas emissions, unstable ground surface due to subsurface subsidence or collapse, potential flames, and others.

2. <u>Do not attempt to douse or flood the wells or area of the suspected SSO with water.</u>

3. Individuals responding to or investigating an SSO should take the following safety precautions, at a minimum:

    a. Consult the site (or project) health and safety plan (HASP) for procedures related to landfill fires and SSOs.
    b. Under no circumstances shall an initial investigation be conducted without first consulting the HASP and implementing appropriate controls and procedures.
    c. Do not breathe landfill gas or smoke. Stand upwind of any emissions.

   d. Wear appropriate PPE. Burns may be caused by hot PVC/HDPE/steel.
   e. **Do not walk or drive heavy equipment or vehicles near wells or any surface depressions until ground stability has been verified**. If necessary, position deck boards near the well to maintain surface stability if it is questionable. The burned waste mass may give way and equipment/personnel may fall into the sinkhole.

4. Do not change the condition of the LFG extraction wells/collectors.

5. Personnel shall conduct a physical inspection that includes the following:

   a. Inspect the nearest extraction well to the suspected SSO location.
   b. Inspect all wells within 500 feet of the nearest extraction well to the suspected SSO location.
   c. Inspect the landfill surface within 500 feet of the nearest extraction well to the suspected SSO location.
   d. Visually inspect for large localized settlement, cracks, holes, collapse, missing components, or areas that could be sources of air intrusion into the waste mass:

      i. Monitoring ports
      ii. Well casing
      iii. Geomembrane boots at wells or other components
      iv. Hoses
      v. Erosion ruts/rills
      vi. Dry soil cracks
      vii. Manways
      viii. Lift stations
      ix. Sumps
      x. Leachate cleanout risers

6. Measure gas quality, pressure and temperature at all wells within 500 feet of the nearest extraction well to the suspected SSO location. Special precautions may be necessary to address high gas temperatures.

7. Measure CO concentrations with colorimetric tubes (Draeger tubes) at all wells within 500 feet of the nearest extraction well to the suspected SSO location.

   a. Gas temperature and interference gases can affect the accuracy of the measurement; therefore, the results of any CO monitoring should be expressed qualitatively only.
   b. Follow tube manufacturer's instruction on the use of pre-filters and/or carbon pre-tubes to minimize the impact of potential interference gases.

8. Infrared Thermometer Survey – Use an IR laser thermometer to measure the temperature of the ground surface in the area of the suspected SSO. Shallow fires or fires that have consumed large amounts of trash will produce elevated surface temperatures. Extreme caution must be taken in these areas due to the potential for the ground to give way.

12.4 DATA ANALYSIS

In order to determine the state of the SSO, the following should be performed or evaluated:

1. Obtain carbon monoxide samples using colorimetric tubes.
2. Temperature gradient between monitored wells.
3. Oxygen gradient between monitored wells.
4. Balance gas (or nitrogen if measured directly) to oxygen ratio gradient between monitored wells.
5. Pressure gradient between monitored wells.
6. Methane to CO_2 ratio gradient between monitored wells.

Analytical data on the gas in the wells in the vicinity shall also be collected using either Tedlar bags or pre-evacuated SUMMA canisters. The analysis shall include fixed gases (CH_4, CO_2, O2, and N_2), CO, and ammonia. Other compounds may be added if necessary. ***Take samples of flowing gas, not stagnant gas.***

12.5 REMOVING SOURCES OF OXYGEN

The key to stopping an SSO once it has begun is to completely restrict oxygen from entering the smoldering waste mass (i.e., snuff it out). Once the initial investigation has been performed and a general sense of the extent of the SSO has been determined, safely begin to restrict further oxygen intrusion using the following method:

A. Shut down any wells that are believed to have been the cause of the SSO. Complete SSM forms as necessary.

B. Shut down all wells within the perceived area of influence (often within approximately 300-500 feet of the suspect well(s)). Complete SSM forms as necessary.

C. Cap or repair any item identified during the physical inspection that may be contributing to oxygen intrusion.

D. Carefully add additional cover soil to areas that show cap integrity issues, if necessary. Work slowly and pay special attention to the ground surface as material placement commences.

    1. During cover placement activities there should be a minimum of two people available: the equipment operator and a line-of-sight person on the ground that is responsible for watching the ground surface as the equipment operator places the soil.

    2. Slowly push soil into the area and compact with the bucket or tracks of the equipment.

E. Verify the air-tightness of all pneumatic devices within 1000' of the suspected SSO area and verify system air consumption is consistent with times prior to the event and during.

12.6 THINGS TO AVOID

1. Flushing the well with water. Flushing the well with water can potentially clog the well. It will also generate steam, pressure, and odor when water hits the SSO area.

2. Excavating soil in the SSO area. Excavation will allow additional oxygen to enter the already smoldering waste mass and can potentially cause it to auto-ignite.

3. Venting. Do not remove the wellhead to vent the well. Wellfields are typically under negative pressure. Residual vacuum may exist in the waste mass for a period of time when wells are closed. If the wellhead is removed to vent, it is highly possible that the residual vacuum in the area will pull ambient air into the waste mass, adding oxygen to the SSO.

4. Dry ice application. While dry ice may have a temporary cooling effect on the physical well casing, it will have little to no effect extinguishing the SSO

5. Introduction of water into open landfill cap or cover soil fissures. Applying water to open fissures in the cap where an SSO exists can create a plume of highly odorous steam and could potentially impact slope stability. It is also dangerous to bring a heavy, rubber tired water truck to the area to apply water. The steam created can be dangerous to workers in the immediate area. If an open cap fissure exists in an SSO area, follow the procedure for placing cover soil described above. Removing the pathway for oxygen intrusion is the most effective way to extinguish the SSO.

12.7 CONTINUED MONITORING

Site personnel or the OM&M Provider should visually monitor the area of the suspected SSO at least three times a week until the SSO has been fully remediated. In addition, the wells closest to the SSO area and adjacent wells should be monitored three times a week for two weeks. The wells should be monitored for gas quality, temperature, and CO.

As the SSO subsides, residual CO will remain in the waste mass for weeks and possibly months. Elevated CO levels are not a reliable indicator that an SSO is still in progress. However, CO levels should generally decline with time if the oxidation has been terminated.

Once SSO indicators are no longer noted, the wells in the SSO area and the adjacent wells should be monitored once per week for at least 4 months before returning to a normal monitoring schedule.

12.8 REPAIRS

Repairs should be made to the SSO area, as necessary. The OM&M Provider shall visually inspect the following:

- Wellheads and lateral piping
- Cover soil and geosynthetics
- Other items within the SSO area

Findings and repair options shall be forwarded to WPWMA and Landfill Operations Manager who will facilitate repairs, as appropriate.

12.9 TIMELINE

It is important that a structured SSO monitoring plan and diligent adherence to the plan be carried out to return the wellfield to SOP operations as soon as possible. However, it is advisable to take time and slowly ensure the SSO is fully extinguished, and that the anaerobic bacteria population in the area has recovered and is consistently producing gas.

The severity of the SSO, the age of the waste, moisture content, and a number of other variables will all determine how long it takes the wellfield to regain compliance with the SOP. Experience has

shown that the timeline from the point when the SSO is identified and extinguished to the point when the wellfield resumes normal operations can vary from 2 to 3 weeks up to (in some serious SSO situations) 1 year or more.

SECTION 13
GCCS INSPECTION AND MAINTENANCE

Regular inspection and maintenance of GCCS components is critical to the consistent and reliable operation of the system. Maintenance procedures are intended to be preventative in nature and to identify problems before they impact the performance of the GCCS or its components. Failure to perform proper inspections and maintenance may result in failure of critical components that could render the GCCS inoperable or reduced operational life. Failure to perform proper inspections may also cause permit and/or air compliance violations.

13.1 COMPONENT INTEGRITY CHECKS

Inspections are intended to identify conditions that impact the effectiveness or efficiency of the GCCS. Inspection data will be used by WPWMA to identify possible system improvements and to schedule repairs.

A. Record issues found during inspections in the monthly O and M reports.

B. Notify WPWMA immediately if an identified problem could cause a GGCS emergency, regulatory exceedance, or non-compliance with site-specific permit requirements or federal, state, or local regulations.

13.2 TEMPORARY REPAIRS

The application of duct tape and/or silicone to malfunctioning joints is considered a short term (15-days or less) "quick fix" and is not an acceptable long-term repair option. Once a joint malfunction is identified, notify WPWMA of the situation and install a permanent replacement immediately. If duct tape is used to temporarily repair a joint, the duct tape will be dated with a permanent marker to verify the duration the tape has been in place.

13.3 COVER INTEGRITY AND WELL INSPECTION (MONTHLY)

WPWMA requires all sites to perform monthly cover integrity inspections, regardless of whether they are subject to the NSPS/EG requirements listed in 40 CFR 60.755(c)(5).

The OM&M Provider shall conduct these inspections during routine OM&M activities and report any findings immediately following the event to the Landfill Operations Manager or WPWMA so that the appropriate repairs can be performed. The verbal report shall include an accurate description and location of the repair needed. The OM&M personnel shall also make notes of the repairs needed within the log book.

13.3.1 Cover Integrity

Visually inspect the surrounding cover surface integrity:

- Pay special attention to the cover located directly around each well casing, noting signs that the soil is desiccating or pulling away from the well casing.

- Note surface water erosion, ponding, leachate breakouts, or staining.

- Note any settlement around the well casing. Immediately report settlement to the Landfill Operations Manager or WPWMA. Soil should be immediately applied to the area by site personnel or a contractor to match the surrounding grade.

13.3.2 Well Casings

- Visually inspect above grade well casings and surrounding areas for signs of damage, deterioration, or potential problems.

- Use below grade inspection techniques when GCCS monitoring data indicates it is appropriate. (This type of non-routine work must be approved by WPWMA in advance.)

13.4 CONTROL DEVICE SYSTEM OPERATION

GCCS control devices (blower/flare, compression skids, etc.) all have safety features built into the system that insure proper operation of components at tolerances supplied by the manufacturers. These safety features (presence of flame, bearing temperature, flashback monitoring, flame temperature, louver control, fail-safe valve operation, etc.) may individually or wholly be compromised if the flare is not operated in automatic mode. Automatic mode ensures that the flare is operating safely, and the system will properly go through a shutdown procedure if tolerances do not meet programmed set points. **Operation of the flare in manual mode bypasses most, if not all, of these safety features and is not allowed except for the following situations:**

A. If the system will not operate in automatic mode, stop the system, and begin troubleshooting to determine the cause.
    1. If a cause cannot be readily found, immediately notify WPWMA or Landfill Operations Manager of the situation. Do not restart the system.
    2. Contact the flare manufacturer to perform troubleshooting and/or to begin repair of the system.
    3. Prepare an SSM form, if applicable.

    To perform other tests or purposefully operate the system in limp mode for greater compliance reasons. This type of operation may only start after WPWMA LFG Operations Manager has agreed to the non-standard operation.

13.5 MONTHLY INSPECTION AND MAINTENANCE

The following work is required to be performed as part of the routine OM&M work on a monthly basis. Issues observed during monthly inspections shall be documented and included in the monthly report or communicated to WPWMA otherwise as requested. Repairs shall be made as expeditiously as possible, and in some cases, if possible, shall be performed during the routine monitoring event. All data collected (e.g., pump cycle counts, force main pressures, condensate knockout pot pressures, blower operating parameters, etc.) shall be recorded, tabulated, and graphed (if appropriate) and included in the monthly report for record keeping and future troubleshooting purposes.

1. LFG Wells/Collectors: Inspect and repair wells/collectors, wellheads, and related components as detailed in Section 5.7. Items to be inspected include:
    a. Wellhead valve
    b. Flexible hose

c. Sample ports, thermometer (if permanently installed), and related components
d. Well casing
e. Mechanical joints and fittings
f. Flow measurement devices
g. Well ID label

2. Dewatering Pumps
    a. Record cycle counter readings, tabulate, and chart historical cycle counts for inclusion in the monthly report to be submitted to WPWMA.
    b. Note and repair kinked discharge hoses, leaking discharge hoses and fittings, leaking air supply components (regulators, fittings, valves), etc.
    c. Identify if pump is working. If stalled, attempt to return it to operation. If it is necessary to pull the pump for inspection or cleaning, coordinate that work with WPWMA so that it can be performed according to the OM&M Provider's contract.

3. Condensate/LFG Well Dewatering Lines
    a. Inspect air and force mains/gravity lines for proper operation.
    b. Open air supply line isolation valves monthly to remove any built-up condensation. Use caution as this line will have significant pressure.
    c. PVC pipe, fittings, and valves may not be used on air supply lines due to safety concerns. If PVC pipe, fittings, or valves are installed on any air supply systems, notify WPWMA so that they can be replaced with metal or HDPE components.

4. Condensate Sumps/Pump Stations
    a. Inspect all sumps and traps to confirm that vacuum is present at expected and appropriate values.
    b. Confirm that sump components (gaskets, lids, bolts, etc.) are tight and not leaking.
    c. Check pump to confirm proper operation. If the pump is pneumatic, confirm that adequate air pressure is available to the pump. If the pump is electric, check the control panel to ensure the pump is properly functioning.
    d. Record pump cycle counts or hour meter measurements and verify that the pump is advancing liquid.
        i. If no liquid advancement is found where it normally exists, investigate to determine if pump is operational.
        ii. Pull and inspect pumps for damage/wear when problems are suspected or as part of the routine pump cleaning service for the site.
    e. Check that all valves are operational. This can only be accomplished by regular exercise of the valve.
    f. No PVC or CPVC fittings or valves may be used on any air supply lines. The OM&M Provider shall bring to the attention of WPWMA if PVC or CPVC components are installed on compressed air systems and coordinate replacing those components as soon as possible.

5. Air Compressor
    a. The OM&M Provider shall check the air compressor when doing blower/flare monitoring or maintenance:
        i. Manually bleed liquid from the system components
        ii. Notify WPWMA if it appears service is warranted or there are operational issues that need to be addressed.
    b. Other service that may be required and performed by either site personnel or others include:

i. Check oil level
ii. Clean all filters
iii. Inspect and adjust belts
iv. Record hour meter information, if equipped
v. Inspect air dryer for proper operation (if installed). If a desiccant dryer is being used, check the date of the last media change. If new media is needed or service is due, notify WPWMA or Landfill Operations Manager.

6. Blower Station and Related Piping

a. **Automatic Mode:** Ensure the blowers and flare are operating in "Auto" mode. (See Section 7.2)
   i. Never allow the system to operate in "Hand" or "Manual" mode, except during short-duration testing. Operation in anything other than Auto mode is against WPWMA policy.
   ii. Failure to comply with this will be cause to immediately terminate the OM&M Provider's contract.
b. **Condensate knockout pot (KOP)**
   i. See Section 7.2.
c. **General blower station operation**
   i. Check blower/flare station operation in accordance with the manufacturer's requirements.
   ii. Troubleshoot or coordinate with WPWMA to troubleshoot any recurring alarms, shutdown conditions, or fluctuating flow or vacuum conditions.
   iii. Notify WPWMA of any required maintenance or preventative maintenance needed on the system.
   iv. Inspect for proper operation during each monitoring event.
   v. Ensure that all moving parts are properly lubricated per manufacturer recommendations.
d. **Control Panel**
   i. Verify all indicator lights, gauges, and other components are operational during monthly monitoring.
   ii. Check for and remove debris, rodents, and insects that may have entered the panel.
e. **Blower Rotation and Usage**
   i. Rotate which blowers are being used so that the primary and backup blowers are in use approximately the same amount of time and are kept in good working order.
f. **Blower Greasing**
   i. The OM&M Provider shall know the requirements for greasing the particular blower in use, and shall consult with the blower manufacturer to confirm the requirements based on the unit's Shop Order No., if necessary.
   ii. In accordance with blower manufacturer's instructions, ensure blower bearings are properly lubricated with the appropriate grease/oil.

g. **Blower Bearing Temperature**
   i. Inspect for excessive bearing temperature (relative to design or manufacturer's suggested operating temperature) during each monitoring event.
      1. If bearing thermocouples are installed, record the temperature displayed on the control panel touchscreen.

2. If bearing thermocouples are not installed, collect a temperature reading using an infrared laser thermometer at a consistent location on the bearing cap.

ii. Tabulate and plot historical temperature trends in an Excel spreadsheet to be maintained on WPWMA's LFG database.

h. **Blower Vibration**
   i. Inspect for excessive vibration relative to normal operations.
   ii. If excessive vibration occurs, switch to the other blower and notify WPWMA of the need for repairs.

i. **Blower/Motor Safety Devices**
   i. Ensure safety devices (belt shrouds, cages, shields, etc.) are installed and functioning properly on a monthly basis.
   ii. If safety devices are not installed or are not functioning properly, notify WPWMA and Landfill Operations Manager immediately so that repairs can be performed.
   iii. Document and repair/replace, as necessary.

j. **Chart Recorder** (See Section 7.2)

k. **Flow Meter** (See Section 7.2)

l. **Flame Arrestor** (See Section 7.2)

m. **Thermocouples**
   i. Inspect for indication of thermocouple failure monthly.
   ii. If erratic operation, check tightness of wiring.
   iii. Replace if necessary.

n. **Valves**
   i. Exercise all valves monthly, and during each forced shutdown.
   ii. Exercise valves across the complete operational range of the valve.

7. **Enclosed Flares** (See Section 7.2 for detailed requirements.) The OM&M Provider's personnel shall be thoroughly trained in the operating principles and troubleshooting of enclosed flares. Demonstration of competency and training certification is required by WPWMA.

   a. **Operating Data Review**
      i. Review the recent flow rate, pressure, and other data via the remote data acquisition system or the digital chart recorder.
      ii. Identify shutdowns and the cause of the shutdowns in order to determine if additional troubleshooting is necessary. Discuss any findings with WPWMA and include a brief summary in the monthly report.

   b. **Thermocouple Selection**
      i. Enclosed flares have multiple thermocouples located at different elevations. Systems controlled by a PLC will automatically choose the appropriate thermocouple based on the flow rate of LFG to the flare. The upper thermocouple is reserved for the highest flow rates and the lowest thermocouple is used for the lowest flow rate range.
      ii. Confirm that that thermocouple selection is set to "Auto".
      iii. If a thermocouple is being manually selected, WPWMA requires the OM&M Provider to confirm this approach with the flare manufacturer and to provide a written explanation to WPWMA and WPWMA's Manager, Landfill Gas Operations as to why this is the preferred mode of operation and why the Auto selection mode cannot be used.

c. **Pilot System**
   i. Verify supply of pilot gas during each monitoring event.
   ii. Coordinate with WPWMA or Landfill Operations Manager if the propane tank needs to be refilled.

d. **Flare Tips:** Visually inspect flare tips monthly to ensure they are operating properly and are not obstructed with debris.

e. **UV Scanner**
   i. Verify proper operation during each monitoring event and forced shutdown.
   ii. Clean bulb and sight tube, where applicable, annually.

f. **Dampers**
   i. Verify proper set points
   ii. Observe operation of flare for proper damper (louver) operation. Harmonic vibration, "popping" sounds, or flames emanating from the top of an enclosed flare are obvious signs of improper damper operation or settings. If these are observed, contact the flare manufacturer for troubleshooting assistance.

g. **Monthly Testing for Backup Devices:**
   If an enclosed flare is used as a backup control device to an LFGE plant, the flare must be operated monthly for a period of time to ensure proper operation, remove moisture from the shell insulation, lubricate blower bearings (for the rare situation in which a separate blower is used for the flare system), and drive out animals and birds that will nest in and damage the unit.

   i. Contact LFGE plant operations personnel to schedule the startup of the enclosed flare. This procedure may require the plant operator to reduce plant output for a period of time to ensure vacuum set point is unaffected.
   ii. Start the flare. Pay close attention to startup procedure, and ensure flare has ignited.
   iii. Allow flare to run for a minimum of 1-hour.
   iv. Shut down flare, and alert LFGE plant operator to resume prior plant output. Ensure vacuum set point is unaffected.
   v. Prepare SSM form, if applicable.

8. **Spare Parts Inventory:** Update the flare station and wellfield spare parts inventory and provide it to WPWMA or Landfill Operations Manager, along with recommendations for additional parts or materials that should be ordered and kept on site.

13.6 QUARTERLY INSPECTION AND MAINTENANCE

1. **Belt Drive Blowers**
   a. Inspect and adjust drive belts quarterly.
   b. Document the condition of the belts and replace as necessary.

2. **Direct Drive Blowers**
   a. Inspect for wear or damage quarterly.
   b. Document conditions and replace parts as necessary.

3. **Combustible Gas Monitoring Systems in On-Site Structures**

a. Stand-alone system
    i. Inspect and test for proper operation.
    ii. Inspect and test quarterly.
        1. Apply a span gas to activate alarm and adjust the activation set point, if applicable.
        2. Calibrate according to the manufacturer's recommendations.
    iii. If units fail to calibrate or are non-functional, notify WPWMA and Landfill Operations Manager immediately so that units can be replaced and alternate safety measures may be implemented, if necessary.
b. Alarm monitoring system
    i. Inspect quarterly.
    ii. Test annually for proper operation.
    iii. Calibrate according to the manufacturer's recommendations.
b. If units fail to calibrate or are non-functional, notify WPWMA and Landfill Operations Manager immediately so that the units can be replaced and alternate safety measures may be implemented, if necessary.
c. If units are not installed, notify WPWMA immediately.

4. Flow Meter
    a. Remove the flow meter element and clean it quarterly per manufacturer recommendations. Ensure that the probe is properly aligned when reinstalling it.

5. Access Points: Inspect quarterly, at a minimum.
    a. Inspect collection piping access points (sumps, access risers, manholes, etc.) for integrity (gaskets, flanges, piping, etc.).
    b. Inspect leachate clean-out risers, manholes, tanks, etc. for gas leaks or possible points of air intrusion.
    c. Any areas of apparent gas leaks or air intrusion should be noted and brought to the immediate attention of WPWMA and/or Landfill Operations Manager.

13.7 SEMI-ANNUAL INSPECTION AND MAINTENANCE

1. Control Panel: Check for loose wires and tighten, as necessary, taking care to not over-tighten any connections.
2. Flare Thermocouples
    a. Confirm proper operation of thermocouples.
    b. Check for heat damage.
    c. Check thermocouple wiring and terminal connections.
3. Valves (Header, Condensate System, Flare Station)
    a. Exercise valves through their full range of motion to ensure proper operation.
        i. Perform semi-annually
        ii. During this task, monitor system pressure on both sides of the valve to verify that the valve is operating as intended.

13.8 ANNUAL MAINTENANCE

1. Open Flare Pilot System
    a. Inspect and clean pilot. Remove debris, spider webs, etc.
2. Flow Meter
    a. Flow meters are maintenance items that need to be serviced and calibrated at regular frequencies. Proper flow meter performance is imperative in order to properly

report emissions (GHG, Title V, etc.), gauge system performance against expectations (metrics), and for LFGE purposes. Without proper maintenance, flow measurement accuracy declines over time.

b. Calibration requirements
    i. Flow meters shall be calibrated per manufacturer's recommendations, or annually at a minimum.
    ii. Calibration usually requires removal of the flow measuring device from the gas conveyance pipe.
    iii. Only qualified individuals may perform field calibrations.
    iv. A calibration certificate shall be issued for all calibrations.
c. Insertion type meters (heat probe)
    i. Pull and clean the probe quarterly according to manufacturer recommendations.
    ii. Verify proper position and orientation prior to removal and following replacement.
    iii. Verify meter is properly zeroed by forcing shutdown and observing the recorded flow. Flow should be zero during a forced shutdown.
d. Pressure transmitter type
    i. Verify consistent measurements and that the meter zeroes properly when system is down or during forced shutdowns.

13.9 SPARE PARTS

The OM&M Provider shall keep an inventory of spare parts on site for the GCCS and shall consult the site-specific OM&M manual(s) for each system component to ensure that the recommended spare parts are included in the inventory. When parts are used from the inventory, the OM&M Provider shall reorder those parts as soon as possible and after confirming with WPWMA whether parts are to be purchased directly through WPWMA vendors. The OM&M Provider is required to always keep WPWMA informed of any spare part orders.

The OM&M Provider shall prepare and submit to WPWMA on a quarterly basis report identifying the type and number of spare parts on-hand.

At a minimum the spare parts inventory shall include, but is not limited to:

13.9.1 Control System

1. Drive belts
2. UV scanner/bulb (where installed)
3. One thermocouple of each type/size present on control device
4. Propane for pilot system
5. Compressed gas (nitrogen or compressed air) for pneumatic valve operation
6. Flexible shaft coupler
7. Blower bearing set (front and back) for each blower on-site
8. Indicator light bulbs
9. Media for recording device

13.9.2 Collection System

1. Wellhead flex hoses
2. Flex hose clamps

3. Sample ports (brass hose barbs or plastic quick connect fittings)
4. Sample port stoppers (silicone plugs) if using hose barb equipped wellheads
5. Thermometer (where installed)
6. Wellheads
7. Elastomeric (Fernco) couplers
8. Band clamps
9. Gaskets
10. HDPE pipe/fittings
11. Bolt kits

SECTION 14

LEACHATE COLLECTION SYSTEM OPERATIONS

The Leachate Collection and Recovery System (LCRS) has been installed at the WPWMA Landfill in order to comply with the requirements of Title 27 of the California Code of Regulations. This requires that owners/operator of landfills remove leachate from the landfill in order to maintain liquid levels on the subliner to no more than 1 foot of liquid (for Modules 1, 2, 10, 11-15) and 3 inches (for Modules 16, 5 and future modules). The below procedures have been developed to maintain proper operation of the LCRS to meet the requirement.

14.1.1 Pump Operation

14.1.1.1 In order to maintain proper liquid levels the pumps (pneumatic or electric) must be monitored and inspected on a weekly basis for proper operation. These inspections should include the following: individual pump station inspection, gallons removed since previous visit, electronic liquid level data (if applicable), and amperage while in operation and operating hours.

14.1.1.2 Maintenance of the pumps shall be performed in accordance with the manufacturer's specifications and repaired if the pumps appear to be malfunctioning.

14.1.1.3 Until such a time as dedicated power is available to all locations, the pumps shall be operated at the frequency required to maintain proper liquid levels using portable generators.

14.1.2 Liquid level monitoring

14.1.2.1 Liquid level monitoring at the leachate sumps shall be performed on a monthly basis unless liquid level sensors with direct level readouts are present. This will verify that the liquid levels are being maintained at the required regulatory level.

14.1.2.2 Liquids levels shall be verified using a sound actuated liquid level meter which shall be lowered into the casing of the leachate riser until liquids are observed by an audible tone. If a different manual level meter is to be used, it must be approved by the WPWMA manager.

14.1.2.3 Liquid level on the liner shall be determined by comparing the level observed to the bottom depth and calculating the level based on the following calculation: measured bottom depth minus observed liquid level divided by the slope of the module's side slope. For a 3:1 side slope, the calculation looks like this:

(BD-LD)/3=liquid on liner.

14.1.2.4 If liquid level monitoring results indicate an elevated liquid level (greater than the allowable depths noted above) the pump operational frequency (if site power is not yet available) shall be re-evaluated by WPWMA and the operator in order to increase liquid removal.

14.1.3 Force Main Inspections

14.1.3.1 On a weekly basis the force main shall be inspected for leaks or damage, which if any is noted the system will be shut-down and the WPWMA manager shall be immediately notified. It is the responsibility of OM&M Provider or WPWMA manager to determine if repairs can be performed or if the system will need to remain off line. If the system cannot be repaired within 48 hours, WPWMA will notify the appropriate regulatory agencies if needed.

14.1.3.2 On a weekly basis, OM&M Provider shall obtain total gallons removed from the landfill at the outfall location. This data is required for reporting purposes and shall be submitted to WPWMA on a monthly basis for inclusion in the semiannual reports.

14.1.3.3 On a monthly basis OM&M Provider shall perform collection of pipeline back pressure readings from the force main at selected locations to determine if fouling/plugging of the pipeline is occurring. If needed, additional pressure gauges shall be installed by OM&M Provider upon approval from the WPWMA manager. This data is critical in maintaining and verifying proper system operation. The OM&M Provider shall develop a system curve based on pipe throughput and measured pressure levels along the pipeline, and chart the current period's readings against that system curve. If pressure levels indicate greater than 10% deviation from the system curve, the OM&M Provider shall notify the WPWMA LFG Operations Manager and the WPWMA may request additional investigation or cleaning of the force main.

14.1.3.4 If cleaning of the force main is indicated based on pressures, OM&M Provider or WPWMA will choose the locations for performing the cleaning using high pressure water, snaking or other approved method. This work will be coordinated through WPWMA and is performed as needed.

14.1.4 Flow meter monitoring and inspections

14.1.4.1 On a weekly basis all flow meters shall be inspected and total gallons removed will be recorded. If the meter indicates a low flow condition the meter will be cleaned and tested.

14.1.4.2 On an annual basis, or more frequently if warranted, the flow meters will be tested for accuracy. This will be done by performing a bucket test and comparing the volume pumped into a graduated cylinder or drum and comparing the value on the meter to the level in the drum. This work will be coordinated with the WPWMA manager and is performed by OM&M Provider as part of the annual system performance test and is not considered routine maintenance.

14.1.5 Monthly Monitoring of Leachate Water Quality

14.1.5.1 On a monthly basis, the WPWMA will sample each location for the following water quality parameters in accordance with the requirements of the site Waste Discharge Requirements (WDR) by grab sample method from the pumping system: pH, Electric Conductivity (EC), Turbidity and Temperature. This information shall be reported to the Water Board, retained and sent to the others as required.

14.1.6 Annual LCRS Performance Testing

14.1.6.1 In accordance with the requirements of Title 27 of the CCR, on an annual basis the system will be tested for proper operation. This test shall be performed to verify that the system is operating normally and no fouling/plugging of the LCRS is occurring in the individual modules. The test shall be performed by installing dye, salts or other additive into the cleanouts on the opposite side of the landfill from the pumping stations, or into the extraction wells on the module where a liner system is present and then observing the discharge from the pumps for evidence of the injected material. OM&M Provider will record the time necessary for the test additive to transit the waste mass. The actual procedures for this work will be agreed upon by WPWMA, site personnel and the contractor performing the test.

Appendix A – Landfill GCCS Design Plan

cornerstone
A TETRA TECH COMPANY

Building lifetime relationships with our clients and employees.

Landfill Gas Collection and Control System Design Plan

Western Regional Sanitary Landfill

October 2016

Prepared for:
Western Placer Waste Management Authority
3033 Fiddyment Road
Roseville, CA 95747

7600 Dublin Blvd., Suite 200
Dublin, CA 94568
(877) 633-5520

REPORT CERTIFICATION

Landfill Gas Collection and Control System Design Plan

Western Regional Sanitary Landfill
Lincoln, California

The material and data in this report were prepared under the supervision and direction of the undersigned.

Cornerstone Environmental Group, LLC

Craig W. Young, P.E.
Project Manager

REGISTERED PROFESSIONAL ENGINEER
PAUL JAMES STOUT
No. C052827
Exp. 12/31/16
CIVIL
STATE OF CALIFORNIA
10/28/16

Paul Stout, P.E.
Regional Vice-President

TABLE OF CONTENTS

REPORT CERTIFICATION II

LIST OF TABLES VI

1 INTRODUCTION 7

1.1 PURPOSE OF REPORT 7
1.2 COMPLIANCE SUMMARY TABLES 7

2 EXISTING SITE CONDITIONS 8

2.1 LANDFILL DESCRIPTION 8
2.2 LANDFILL GAS COLLECTION AND CONTROL SYSTEM 9
2.2.1 EXISTING GAS COLLECTION AND CONTROL SYSTEM 9
2.2.2 PROPOSED GAS COLLECTION AND CONTROL SYSTEM IMPROVEMENTS 10

3 FUTURE SITE DEVELOPMENT 11

3.1 GCCS DEVELOPMENT PLAN 11
3.2 LANDFILL GAS CONTROL SYSTEM EXPANSION CAPABILITIES 11
3.3 INTERIM LANDFILL GAS CONTROL SYSTEM DESIGN CONSIDERATIONS 11
3.3.1 GAS COLLECTION SYSTEM EXPANSION DURING INTERIM CONDITIONS 11
3.3.2 COMPATIBILITY WITH REFUSE FILLING OPERATIONS 13

4 COMPLIANCE REVIEW AND EVALUATION 14

4.1 COMPLIANCE WITH §60.759(A)(1) 14
4.1.1 CONTROL SURFACE EMISSIONS 14
4.1.2 DEPTHS OF REFUSE 14
4.1.3 LANDFILL GAS GENERATION RATES AND FLOW CHARACTERISTICS 15
4.1.4 LANDFILL COVER PROPERTIES 15
4.1.5 LANDFILL GAS CONTROL SYSTEM EXPANDABILITY 15
4.1.6 CONDENSATE MANAGEMENT 16
4.1.7 ACCESSIBILITY 16
4.1.8 COMPATIBILITY WITH REFUSE FILLING OPERATIONS 16
4.1.9 INTEGRATION WITH CLOSURE END USE 16
4.1.10 AIR INTRUSION CONTROL 17
4.1.11 CORROSION RESISTANCE 17
4.1.12 FILL SETTLEMENT 17
4.1.13 RESISTANCE TO DECOMPOSITION HEAT 18

4.2 COMPLIANCE WITH §60.759(A)(2) 19
4.3 COMPLIANCE WITH §60.759(A)(3) 20
4.3.1 ASBESTOS AND NON-DEGRADABLE MATERIALS 20
4.3.2 NONPRODUCTIVE AREAS 20
4.4 COMPLIANCE WITH §60.759(B)(1), (2), AND (3) 20
4.4.1 LANDFILL GAS EXTRACTION COMPONENT CONSTRUCTION 20
4.4.1.1 Materials 21
4.4.1.2 Component Sizing 21
4.4.1.3 Component Loading 21
4.4.1.4 System Expansion 21
4.4.1.5 Component Perforation 22
4.4.1.6 Air Infiltration 22
4.4.2 LANDFILL GAS EXTRACTION COMPONENT INSTALLATION 22
4.4.2.1 Component Placement 22
4.4.2.2 Leachate 22
4.4.2.3 Vertical Wells 23
4.4.2.4 Horizontal Wells 23
4.4.2.5 Component Short Circuiting 23
4.4.2.6 Gravel Backfill 24
4.4.3 LANDFILL GAS EXTRACTION COMPONENT CONNECTIONS TO LFG TRANSMISSION PIPING 24
4.5 COMPLIANCE WITH §60.759(C)(1) OR (2) 24
4.5.1 EXISTING LANDFILL GAS FLOW RATE DATA 24
4.5.2 FUTURE LANDFILL GAS FLOW RATE ESTIMATES 25
4.6 ALTERNATIVES AND COMPLIANCE WITH §60.752(B)(2) 25
4.6.1 SUBMIT A DESIGN PLAN 25
4.6.2 ALTERNATIVES TO THE NSPS 25
4.6.3 SPECIFICATIONS FOR ACTIVE COLLECTION SYSTEMS 26
4.6.4 INSTALLATION OF LANDFILL GAS COLLECTION AND CONTROL SYSTEM 26
4.6.5 CONTROL SYSTEMS 27

LIMITATIONS 29

TABLES 30

APPENDICES

APPENDIX A 2016 GCCS DESIGN DRAWINGS

APPENDIX B ALTERNATIVES TO LANDFILL NEW SOURCE PERFORMANCE STANDARDS (NSPS) REQUIREMENTS

APPENDIX C LANDGEM LANDFILL GAS EMISSIONS MODELING

APPENDIX D LANDFILL METHANE RULE (LMR) SURFACE EMISSIONS MONITORING PLAN

List of Tables

Tables

Table 1 Regulatory Compliance Checklist
Table 2 Landfill Gas Collection and Control System Design Review Checklist

1 INTRODUCTION

1.1 Purpose of Report

This Landfill Gas Collection and Control System (GCCS) Design Plan update was prepared by Cornerstone Environmental Group, LLC (Cornerstone) on behalf of the Western Placer Waste Management Authority (WPWMA). This Plan update follows the requirements of the New Source Performance Standards (NSPS) for the GCCS at the Western Regional Sanitary Landfill (Landfill) located in Lincoln, California and was prepared pursuant to 40 Code of Federal Regulations (CFR) Part 60, Subpart A (General Provisions), and Subpart WWW (Standards of Performance for Municipal Solid Waste Landfills). This GCCS Design Plan supersedes all other previously prepared submittals pertaining to the GCCS design and is the document that will govern the operating, monitoring, and recordkeeping standards for the GCCS at the Landfill.

1.2 Compliance Summary Tables

A summary of the pertinent NSPS regulations and implementation of these regulations at the Landfill is presented in Table 1 of this Plan. Additionally, location references of the regulations in this Plan and in Appendix E of the NSPS enabling documents are presented in Table 1.

A Design Review Checklist from *Training Course for Landfill Gas NSPS/EG Regulatory Personnel to Review GCCS Design Submittals, North Carolina State University, September 1998* is provided as Table 2.

2 EXISTING SITE CONDITIONS

2.1 Landfill Description

The Landfill, owned by WPWMA and operated by a third party, is located off Athens Avenue in Lincoln, California. The Landfill opened in October of 1979 and accepts municipal solid waste (MSW). The final footprint will comprise approximately 231 acres. The site is permitted to contain a total of approximately 36.35 million tons of waste at closure. The Landfill operates under Solid Waste Facility Permit (SWFP) Number 31-AA-0210, issued by the California Integrated Waste Management Board (CIWMB).

The Landfill is a mound-over-excavation type fill. The Landfill currently consists of 16 modules for MSW placement. Module Numbers 1, 2, 10 and approximately 55 percent of Module Number 11 are identified as pre-Subtitle D, Class III, and were constructed without a geomembrane base liner. Module Number 2 has a single leachate sump and Module Numbers 10 and a portion of Module 11 have a gravel layer leachate control and recovery system (LCRS) constructed over native subgrade. The native soil subgrade was recompacted in areas where permeable soil was encountered. Module Numbers 12, and 45 percent of Module Number 11, are geomembrane-lined and have LCRSs, but are also classified as pre-Subtitle D, Class III. These modules were constructed by placing flexible member liner (FML) and a gravel LCRS layer over the native subgrade. The Module Number 13 base liner was constructed per Subtitle D requirements (FML and LCRS over two (2)-feet of compacted clay), and is also classified as Class III.

The remaining Module Numbers 14 through 16, and 5 through 9 have been redesignated as Subtitle D, Class II. The modules designated as Class II have been, or will be, constructed with a certified low permeability soil layer, a secondary geomembrane liner, and LCRS, as required. Module designation Numbers 3 and 4 have been removed from the MSW landfill design to provide area for the materials recovery facility (MRF).

The Landfill is regulated by the California Department of Resources Recycling and Recovery (CalRecycle), the Central Valley Regional Water Quality Control Board (RWQCB), Placer County Department of Health and Human Services (PCDHHS), and the Placer County Air Pollution Control District (PCAPCD). PCDHHS is the local enforcement agency (LEA) for the CalRecycle regulations. The Landfill is operated under a Title V Permit (Facility Identification WR-01) under the Federal Clean Air Act, as implemented by PCAPCD, with an expiration date of July 6, 2021.

2.2 Landfill Gas Collection and Control System

2.2.1 Existing Gas Collection and Control System

At the time of this plan, an active GCCS has been constructed and is operating at the Landfill. This section identifies both existing and proposed components of the GCCS at the Landfill. In conjunction with this plan, a GCCS design will be implemented to comply with the NSPS regulations.

The Landfill has installed and currently operates a GCCS with control devices including an enclosed flare (WPWMA flare), one (1) primary and two (2) standby landfill gas (LFG) transmission blowers, associated piping and controls. The WPWMA flare is operated under PCAPCD Permit Number PLWR-01-01. In addition, a third party LFG-to-energy (LFGTE) facility is operated on the Landfill which consists of internal combustion engines with generators and a small enclosed LFG flare for combusting excess LFG. The small enclosed flare at the LFGTE facility is operated under PCAPCD Permit Number PLWR-05-01.

The existing GCCS wellfield consists of approximately 63 vertical LFG extraction wells (interior wells), 27 perimeter wells, and 13 horizontal collectors. The existing infill (interior) LFG extraction wells are spaced between 150 and 300 feet on center and are perforated in ranges from approximately 35 feet to 85 feet below ground surface. Interior wells are typically constructed with six (6)-inch polyvinyl chloride (PVC) or high density polyethylene (HDPE) pipe and are completed with wellheads that are above the ground surface, with an approximate 36-inch bore diameter.

The perimeter wells are typically located in native soil within five (5) to 15 feet of the edge of the landfilled waste. The perimeter wells have an average well spacing of approximately 100 feet on center and are perforated in ranges from approximately 42 feet to 50 feet below ground surface, with an approximate 16-inch bore diameter. The well casings are constructed of two (2)-inch PVC pipe for the older perimeter wells with buried well heads, and four (4)-inch pipe for newer perimeter wells (GW-35 and up). The top of each casing is completed with a wellhead which is approximately one and a half feet below the ground surface and contained within a concrete vault. These perimeter wells are not considered "interior wells" and are therefore exempt from the NSPS wellhead monitoring criteria.

LFG collection piping consists of a combination of below grade and above grade PVC and HDPE pipe. Most of the currently active pipeline is above grade HDPE. The primary header pipe originates from the WPWMA flare station and consists of a 12-inch and eight (8)-inch diameter HDPE header loop that extends from the WPWMA flare station along the west and east sides of the landfill and around Module 15. Various lateral piping sections extend from the main header connecting the vertical LFG extraction wells to the GCCS. The perimeter wells are on separate six (6)-inch diameter PVC and HDPE headers connected to the primary header.

The LFG is conveyed through the pipe network to the WPWMA flare station located at the northern edge of the landfill adjacent to the northern landfill access road. From the WPWMA flare and blower station, LFG is routed to a combination of the WPWMA flare the LFGTE facility, and the small flare at the LFGTE facility.

The GCCS also includes a condensate collection and handling system composed of collection sumps, above ground condensate storage tank, transfer piping, pneumatic pumps and a compressed air system, and force mains that terminate at an existing sewer manhole near the WPWMA flare,. The condensate formed in the GCCS drains into perimeter condensate sumps with pneumatic pumps. Condensate is automatically pumped from these sumps to the sanitary sewer system.

2.2.2 Proposed Gas Collection and Control System Improvements

WPWMA has prepared a design to construct GCCS improvements both at the flare station and in the wellfield in 2016. Wellfield improvement plans include the installation of approximately 19 new vertical LFG extraction wells with associated four (4)- and six (6)-inch and eight (8) inch HDPE lateral piping. New eight (8)-inch HDPE header piping will be installed to connect the new wells to the perimeter header system. One (1) horizontal collector is also planned for installation.

Improvements for the flare station include the installation of a new blower skid and enclosed flare with associated interconnected piping. Various existing components at the flare station will either be removed or relocated for the new equipment.

Additional information and drawings of the GCCS are included in Appendix A.

3 FUTURE SITE DEVELOPMENT

3.1 GCCS Development Plan

Installation of additional GCCS components is anticipated to be coordinated with fill development and following NSPS regulations regarding installation of GCCS components stipulated in §60.752(b)(2)(ii)(A)(2). Due to any future operational changes, the GCCS design presented in Appendix A may be altered to follow the provisions of the NSPS and to accommodate actual field conditions at the time of construction.

3.2 Landfill Gas Control System Expansion Capabilities

The GCCS is designed to be readily expanded as waste fill operations proceed. Vertical or horizontal extraction wells will typically be installed in areas that have received waste for five (5) years and will be installed within two (2) years in areas that have reached final grade. However, extraction wells may be installed as a temporary control measure in disposal areas that have been in place for less than five (5) years and are not yet at final refuse grades.

Vertical extraction wells installed prior to reaching final grade will either be extended to the final grade level or abandoned and replaced. This determination will be made based upon the physical condition of the wells, their ability to provide effective LFG extraction, and field conditions at the time of final cap installation.

Proposed LFG headers are sized to accommodate the maximum expected LFG flow (refer to Section 4.5.2), and are fitted with flanged tees for expansion as new wells and piping are installed, following NSPS requirements. Additionally, the use of HDPE header piping provides for flexible and efficient connections for future expansion of the header piping system.

Additional information and drawings of the GCCS are included in Appendix A.

3.3 Interim Landfill Gas Control System Design Considerations

The purpose of this section is to address interim GCCS design following NSPS installation schedules in fill areas that are actively accepting waste, prior to achieving final fill grades.

3.3.1 Gas Collection System Expansion During Interim Conditions

NSPS requirements that specify additional LFG collection devices and the corresponding expansion of the overall GCCS will be followed. Furthermore, the expansions made to the GCCS during interim conditions will ensure that LFG will be collected at sufficient rates

that may change over the interim time frame, and will be designed and installed properly to minimize the potential for off-site subsurface LFG migration. Some of these requirements are specifically stated below:

> **§60.751** Sufficient density means any number, spacing, and combination of collection system components, including vertical wells, horizontal collectors, and surface collectors, necessary to maintain emission and migration control as determined by measures of performance set forth in this part.
>
> **§60.755(b)** For purposes of compliance with § 60.753(a), each owner or operator of a controlled landfill shall place each well or design component as specified in the approved design plan…..Each well shall be installed no later than 60 days after the date on which the initial solid waste has been in place for a period of:
>
> > **§60.755(b) (1)** 5 years or more if active; or
> >
> > **§60.755(b) (2)** 2 years or more if closed or at final grade.
>
> **§60.759(a)(2)** The sufficient density of gas collection devices determined in paragraph (a)(1) of this section shall address landfill gas migration issues and augmentation of the collection system through the use of active or passive systems at the landfill perimeter or exterior.
>
> **§60.759(a)(3)** The placement of gas collection devices determined in paragraph (a)(1) of this section shall control all gas producing areas, except as provided by paragraphs (a)(3)(i) and (a)(3)(ii) of this section.
>
> **§60.759(c)** Each owner or operator seeking to comply with §60.752(b)(2)(i)(A) shall convey the landfill gas to a control system in compliance with §60.752(b)(2)(iii) through the collection header pipe(s). The gas mover equipment shall be sized to handle the maximum gas generation flow rate expected over the intended use period of the gas moving equipment…

Following these regulations, the GCCS has been designed and will be further expanded as necessary during interim conditions, to extract LFG at a sufficient rate to minimize the potential for off-site subsurface LFG migration and surface emissions of LFG.

Per the definition stated in §60.751, "sufficient density" means "any number, spacing, and combination of collection system components necessary to maintain emission and migration control as determined by measures of performance set forth in this part." Well spacing is established based on surface emissions monitoring (SEM) results, site-specific conditions (waste age, waste density, moisture content, etc.), well radius of influence (ROI) estimates, past operational experience, and engineering judgment. This is consistent with spacing criteria used at other landfills and limits the potential for surface emissions and off-site subsurface migration of LFG.

Per the NSPS requirements, a GCCS must be installed in all areas with waste that is five (5) years or older if active; and two (2) years or more if closed or at final grade. The interim placement of wells at the site will occur in a manner per the NSPS requirements.

In the event that the actual LFG extraction rate exceeds the capacity of the system, additional GCCS components will be designed and installed following NSPS requirements as dictated by actual site conditions at the time of construction. Therefore, actual operating parameters may dictate changes in the system flow characteristics and process equipment as the GCCS is expanded.

GCCS design for the Landfill will appropriately size sufficient collection elements, LFG mover equipment, and control device(s) for the estimated maximum flow rate of LFG. Furthermore, the header and lateral systems will be sized to accommodate the peak flows depending on the planned life of the pipe. If the Landfill plans to operate the header/lateral only during interim conditions, and then dismantle/replace prior to final build out of the GCCS, then it will be sized for the anticipated LFG flows equating to the period of time it is planned to be operational. The portions of the pipe network that the Landfill plans to use as part of the final design will be appropriately sized to handle the anticipated LFG flows in the portion of the Landfill at final build-out.

3.3.2 Compatibility with Refuse Filling Operations

One of the key factors in constructing and operating a GCCS during interim conditions, is to design and install the collectors to be compatible with the refuse filling operations of an active landfill. As refuse filling operations proceed and portions of the site reach final or near final grades, additional GCCS components may be installed to follow the five (5)-year/two (2)-year requirements of NSPS. Using this method allows GCCS components to be installed following §60.752(b)(2)(ii)(A)(2)(i) and (ii) while minimizing interference of the GCCS with ongoing filling operations.

During the process of refuse filling operations, periodically, vertical LFG extraction wells may be "raised" so the new refuse is not placed over the top of an existing well in a manner that covers the wellhead with refuse, thereby preventing access to the well. Vertical LFG extraction wells are raised in anticipation of a new lift of refuse, or in advance of the refuse being added to the area in order to maintain worker safety in the active area during these well raising construction activities. A variance request for monitoring these raised wells is contained in Appendix B of this Plan.

4 COMPLIANCE REVIEW AND EVALUATION

4.1 Compliance with §60.759(a)(1)

> **§60.759(a)(1)** The collection devices within the interior and along the perimeter areas shall be certified to achieve comprehensive control of surface gas emissions by a professional engineer. The following issues shall be addressed in the design: depths of refuse, refuse gas generation rates and flow characteristics, cover properties, gas system expandability, leachate and condensate management, accessibility, compatibility with filling operations, integration with closure end use, air intrusion control, corrosion resistance, fill settlement, and resistance to the refuse decomposition heat.

The Landfill's GCCS has been designed to be consistent with NSPS requirements to achieve comprehensive control of both potential for off-site subsurface LFG migration and surface emissions of LFG. The GCCS is an existing system which is continued to be expanded upon to comply with NSPS regulations. Additional information on the compliance of the GCCS with 60.759(a)(1) is presented in the sections below.

Applicable information used in the design of the GCCS is included in Appendix A (GCCS Design Drawings), Appendix B (Alternatives to the NSPS), Appendix C (Landfill Gas Generation Rate Modeling), and Appendix D (Surface Emissions Monitoring Plan).

4.1.1 Control Surface Emissions

The GCCS was designed to minimize the potential for both off-site subsurface LFG migration and surface emissions of LFG from the Landfill. System performance depends upon the installation of a satisfactory GCCS system, its proper management, and maintenance of a suitable final refuse cover. If there is a temporary exceedance in emissions it will be addressed by appropriate response, evaluating both the GCCS and final cover systems. Appropriate action will then be taken to correct the exceedance as required by NSPS.

4.1.2 Depths of Refuse

Depths of refuse were calculated, at the time of the design of the GCCS, based upon existing topography, permit plan, and record documentation of landfill liner or bottom elevations. The landfill surface elevation was determined from aerial and/or ground survey data available at the time of the design.

4.1.3 Landfill Gas Generation Rates and Flow Characteristics

In compliance with §60.752(b)(2)(ii)(A), the maximum expected LFG generation rate was estimated as 4,060 standard cubic feet per minute (scfm) in the year 2056 based on LFG generation modeling done in 2015 utilizing the United States Environmental Protection Agency (USEPA) Landfill Gas Emissions Mode, Version 3.02. In accordance with §60.755 (a)(1)(iii), following the installation of the initial GCCS, actual flow data has been used to project the maximum expected LFG generation flow rate instead of, or in conjunction with, the equations in paragraphs (a)(1)(i) and (ii) of this regulation.

As specified in 40 CFR 60.759(c)(1), the LFG mover equipment has been sized to handle the maximum LFG generation rate expected over the intended use period of the LFG moving equipment. Additional control device capacity will be installed if warranted in accordance with the NSPS.

LFG generation projections are provided in Appendix C.

4.1.4 Landfill Cover Properties

Modules 1, 2, and the eastern side slope and top deck portions of Modules 10 and 11 are closed. The final cover system for the closed portion of these modules consists of two (2) feet of foundation soils, one (1) foot of clay, and one (1) foot of vegetative support layer. The western portions of Modules 10 and 11 have interim cover consisting of onsite soils.

The final cover for active and future modules is prescribed in the Waste Discharge Requirements but not fully designed. It will likely consist of a low permeable soil layer, geomembrane, or other approved final cover system in accordance with California Code of Regulations (CCR) Title 27 regulations. The primary purpose of the final cover system is to preclude precipitation infiltration that would generate additional leachate. However, the final cover system design also provides a significant barrier to LFG emissions and air infiltration when combined with an active LFG extraction system. The GCCS will provide components for collecting LFG from beneath the final cover system.

4.1.5 Landfill Gas Control System Expandability

Expandability of the GCCS is achieved by installing tees with blind flanges along the transmission piping within the wellfield and at the control facility(s). These flanges provide planned access for expansion of the LFG transmission piping and LFG control devices in the future. In the event that actual LFG flow rates do exceed the capacity of the system, additional GCCS components will be designed and installed in accordance with NSPS requirements.

4.1.6 Condensate Management

Pipelines and wells will be designed to manage condensate and leachate intrusion. This may require the use of in-well condensate/leachate pumping facilities, routing liquid flow into the leachate collection and recovery system (LCRS), temporary pumping of wells if feasible, or abandonment and replacement of wells whose flow rates are insufficient due to condensate/leachate inundation. Whenever feasible, wells will be designed to drain into the LCRS. Wells installed in new waste or active filling areas may need to be larger diameter (i.e. 8" or more) to accommodate in-well pumping systems while, based on site experience, allowing for greater bending of the well casing as it is extended or affected by the waste load around it. Condensate collected in perimeter sumps at low points along the LFG header system is pumped to the WPWMA flare station area by pneumatic pumps. The pumps' discharge is connected to an HDPE force main which discharges condensate to the sanitary sewer system immediately north of the WPWMA flare station.

4.1.7 Accessibility

Accessibility to the GCCS components is achieved by installing commonly accessed components (such as wellheads and monitoring ports) on relatively flat surfaces of the Landfill or near the Landfill's road network. Wellheads, piping risers, valves and monitoring ports will be installed above grade to maintain accessibility and will include valve handle extensions should piping and valves be buried in the future to accommodate fill operations.

4.1.8 Compatibility with Refuse Filling Operations

At the time of this report, an active GCCS has been constructed and is operating at the Landfill. Future additions or expansions of the GCCS will be considered when planning waste filling operations and will be designed to integrate the existing GCCS, to the extent practical.

As refuse filling operations proceed and portions of the site reach final or near-final grades, additional GCCS components will be installed. This method of installation allows GCCS components to be constructed in accordance §60.752(b)(2)(ii)(A)(2)(i) and (ii) while minimizing interference of the GCCS with ongoing filling operations.

4.1.9 Integration with Closure End Use

Currently, the post-closure end-use for the site is unspecified. Future closure end-use must be approved by Landfill personnel to evaluate compatibility with the GCCS. Any items of concern related to maintaining and operating the GCCS will be mitigated by either altering the proposed post-closure end-use or by adjusting or modifying the GCCS in accordance with Landfill and NSPS requirements.

4.1.10 Air Intrusion Control

Potential air intrusion and LFG emissions through the cover system will be controlled through adequate cover system design, cover system pipe penetration design, periodic monitoring and adjustment of the GCCS, and appropriate maintenance of the landfill cover system.

Air intrusion around LFG wells will be minimized by placing a bentonite seal above the screened (perforated) portion of the well and at the landfill surface surrounding the well casing. Pipe boots may also be used to further decrease the likelihood for air intrusion at points where pipes penetrate the cover system. Air intrusion in horizontal collectors will be accomplished by burying horizontal collection trenches under subsequent lifts of refuse and by offsetting the start of perforated piping from side slopes. Based on site experience with pipes breaking in the shallow cover soil, only resilient pipes (i.e. not PVC) will be allowed to extend through the cover system.

Furthermore, air intrusion will be controlled through periodic monitoring for nitrogen or oxygen at each wellhead and conducting adjustments to the GCCS in accordance with the NSPS requirements.

4.1.11 Corrosion Resistance

Corrosion resistance of the GCCS is achieved through the use of corrosion resistant materials or materials that have a corrosion resistant coating, in accordance with 40 CFR §60.759(b)(1). The GCCS components will be constructed of PVC, HDPE, fiberglass, corrosion-resistant steel, neoprene (gaskets and seals) and other non-porous corrosion resistant materials.

Components will be inspected during routine GCCS monitoring for abrasion, chipping, or other potential deterioration of the components. If damage to the materials is observed that may be detrimental to the performance of the GCCS, the components will be replaced or repaired.

4.1.12 Fill Settlement

Settlement will occur due to decomposition and consolidation of the refuse. To accommodate refuse settlement, the GCCS components were designed and installed with several features to account for this settlement including:

- LFG extraction wellheads connected to the LFG transmission piping by a flexible pipe or hose connection. This allows the LFG piping to accommodate some changes in the orientation of the LFG transmission piping or LFG extraction well;

- HDPE piping will be used for the construction of the header piping and transmission system. HDPE piping is flexible and absorbs differential settlement without breaking or cracking; and

- LFG transmission piping will be sloped at sufficient grades so that reasonable amounts of differential and total settlement may occur without causing pipe breakage, or disrupting the overall flow gradient of the LFG transmission piping, with the following minimum slopes unless infeasible;
  - Above ground pipe within the limit of landfilled waste, with LFG flow in same direction as condensate flow – approximately 2%
  - Above ground pipe within the limit of landfilled waste, with LFG flow against the condensate flow direction – approximately 3%
  - Buried pipe within the limit of landfilled waste (seldom used) – approximately 4%
  - Buried pipe within the limit of landfilled waste in actively filling or road crossing areas (seldom used) – approximately 6%
  - Buried pipe outside the limit of landfilled waste in engineered fill or undisturbed soil (seldom used) – approximately 1%

4.1.13 Resistance to Decomposition Heat

Resistance of the GCCS to the heat generated as a result of refuse decomposition is achieved through the use of materials tested and proven to withstand temperatures well above those typically found in landfills. The GCCS will be inspected during routine LFG system monitoring for heat damage. If heat damage of the GCCS components is observed and is believed to be detrimental to the operation of the GCCS, the cause of the elevated landfill temperature will be investigated and the GCCS will be adjusted or modified to mitigate the effects of the elevated temperatures.

The primary point of observation during routine LFG system monitoring will be at the individual wellheads. Each wellhead will possess either an integral thermometer or a connection for the use of portable thermometer. The extraction wells will generally be operated at temperatures of less than 131 degrees Fahrenheit (°F), unless an alternative temperature parameter is approved for an individual monitoring point.

Wellhead components are visually inspected and the control valve and monitoring connection physically exercised during each monitoring event, to ensure correct operation of the components.

4.1.14 Restraint of Pipe in Temperature Fluctuations and UV Protection

Resistance of the GCCS pipeline components to heat generated expansion and contraction is achieved through the use of earth berms, concrete anchors and other materials designed to restrain the pipe, combined with areas designed to allow for pipe expansion. The areas for pipe expansion may include flexible restraint systems (concrete ties with straps oriented perpendicular to the passing pipeline) or flattened areas of land to allow for pipe movement without creating a sag.

UV protection is a concern for the PVC pipelines and PVC based flexible hoses used at each well head. Permanent PVC pipe may be coated with a protective coating of paint. Future permanent piping will be constructed of HDPE instead of PVC.

The GCCS will be inspected during routine LFG system monitoring for UV, heat or expansion/contraction damage, excessive abrasion, collapse or excessive sagging. If damage is observed and is believed to be detrimental to the reliable operation of the GCCS, the cause will be investigated and the GCCS components will be adjusted, modified or replaced to mitigate the effects of the temperature fluctuations.

4.2 Compliance with §60.759(a)(2)

> **§60.759(a)(2)** The sufficient density of gas collection devices determined in paragraph (a)(1) of this section shall address landfill gas migration issues and augmentation of the collection system through the use of active or passive systems at the landfill perimeter or exterior.

Per the definition stated in §60.751, "sufficient density" means "any number, spacing, and combination of collection system components. . . necessary to maintain emission and migration control as determined by measures of performance set forth in this part."

The GCCS consists of vertical wells installed within the waste footprint and just outside the waste footprint, and horizontal collection wells buried within the waste mass. The adequacy of the well density will be confirmed with SEM. Quarterly SEM will be performed using a flame ionization detector (FID), as required under §60.754(c)(3). All exceedances will be properly mitigated and re-tested in accordance with the NSPS. Monitoring of perimeter LFG probes is also conducted and will help determine the GCCS effectiveness to control potential for off-site subsurface LFG migration. All findings are submitted to the facility's operating record.

If the GCCS does not meet the measures of performance set forth in the NSPS, the GCCS will be adjusted or modified in accordance with the NSPS requirements. These adjustments or modifications may include the installation of additional LFG collection elements, cap repairs or other actions defined by field conditions at the time of monitoring.

4.3 Compliance with §60.759(a)(3)

> **§60.759(a)(3)** The placement of gas collection devices determined in paragraph (a)(1) of this section shall control all gas producing areas, except as provided by paragraphs (a)(3)(i) and (a)(3)(ii) of this section.

Compliance related to §60.759(a)(3) are discussed in the following sections.

4.3.1 Asbestos and Non-degradable Materials

> **§60.759(a)(3)(i)** Any segregated area of asbestos or non-degradable material may be excluded from collection if documented as provided under §60.758(d). The documentation shall provide the nature, date of deposition, location and amount of asbestos or non-degradable material deposited in the area, and shall be provided to the Administrator upon request.

The Landfill was previously permitted to accept asbestos but currently does not.

4.3.2 Nonproductive Areas

> **§60.759(a)(3)(ii)** Any nonproductive area of the landfill may be excluded from control, provided that the total of all excluded areas can be shown to contribute less than 1 percent of the total amount of NMOC emissions from the landfill. The amount, location, and age of the material shall be documented and provided to the Administrator upon request. A separate NMOC emissions estimate shall be made for each section proposed for exclusion, and the sum of all such sections shall be compared to the NMOC emissions estimate for the entire landfill.

There are currently no non-productive areas at the Landfill.

4.4 Compliance with §60.759(b)(1), (2), and (3)

> **§60.759(b)** Each owner or operator seeking to comply with §60.752(b)(2)(i)(A) shall construct the gas collection devices using the following equipment or procedures:

4.4.1 Landfill Gas Extraction Component Construction

> **§60.759(b)(1)** The landfill gas extraction components shall be constructed of PVC, HDPE pipe, fiberglass, stainless steel, or other non-porous corrosion resistant material of suitable dimensions to: convey projected amounts of gases; withstand installation, static, and settlement forces; and withstand planned overburden or traffic loads. The collection system shall extend as necessary to comply with

> emission and migration standards. Collection devices such as wells and horizontal collectors shall be perforated to allow gas entry without head loss sufficient to impair performance across the intended extent of control. Perforations shall be situated with regard to the need to prevent excessive air infiltration

Compliance with §60.759(b)(1) is discussed in the following sections.

4.4.1.1 Materials

The GCCS components will be constructed of PVC, HDPE, fiberglass, corrosion-resistant steel, neoprene (gaskets and seals) and other non-porous corrosion resistant materials. Pipelines that penetrate the landfill cover will only be constructed of resilient materials such as HDPE, not of PVC due to site experience with PVC breakage.

4.4.1.2 Component Sizing

The piping network, blowers, and flare are sized for the current anticipated LFG flow rates for the facility. The GCCS is installed with expansion capabilities and the capacity of the extraction and treatment system components may be phased in as LFG generation and extraction rates increase.

4.4.1.3 Component Loading

The GCCS components were designed to withstand the estimated installation, static, settlement, overburden, and traffic loads. The GCCS components that will be installed at the Landfill are consistent with those at other landfills which have been in-place for extended periods of time (in excess of 15 years) and verified to be withstanding applied static and settlement forces. Overburden and traffic loads for the proposed LFG transmission piping are less than the allowable loads recommended by the piping manufacturer. Foundations used for GCCS components were designed to handle the applied loads.

4.4.1.4 System Expansion

The GCCS shall be expanded as necessary to comply with NSPS requirements. Expansion of the GCCS will be certified by a professional engineer and the measures of performance of the LFG system verified as set forth in the NSPS. The Landfill will continue to conduct monitoring and document compliance of the GCCS in accordance with NSPS requirements. If the GCCS at the Landfill does not meet the measures of performance set forth in the NSPS, the GCCS will be adjusted or modified in accordance with NSPS requirements.

4.4.1.5 Component Perforation

The vertical well elements will be perforated similar to those shown on the design drawings (Appendix A), or as approved by the design engineer at the time of installation, to allow LFG entry without inducing head losses sufficient to impair performance across the intended extent of control. The perforation patterns used for the GCCS design have been successfully used in previous LFG control applications.

4.4.1.6 Air Infiltration

The LFG collection elements were designed to prevent excessive air infiltration through the use of solid pipe and solid backfill near the ground surface for vertical extraction wells. Hydrated bentonite clay chips, and/or geomembrane seals will be provided around the vertical extraction well casings where they penetrate the landfill final cover systems. Further, air intrusion control will be accomplished through monitoring of the operational monitoring standards for the LFG collection elements in accordance with NSPS requirements. If the GCCS does not meet the operational monitoring standards, it will be adjusted or modified in accordance with NSPS requirements.

4.4.2 Landfill Gas Extraction Component Installation

> **§60.759(b)(2)** Vertical wells shall be placed so as not to endanger underlying liners and shall address the occurrence of water within the landfill. Holes and trenches constructed for piped wells and horizontal collectors shall be of sufficient cross-section so as to allow for their proper construction and completion including, for example, centering of pipes and placement of gravel backfill. Collection devices shall be designed so as not to allow indirect short circuiting of air into the cover or refuse into the collection system or gas into the air. Any gravel used around pipe perforations should be of a dimension so as not to penetrate or block perforations.

Compliance with §60.759(b)(2) is discussed in the following sections.

4.4.2.1 Component Placement

Depths of refuse were calculated, at the time of the design of the GCCS, based upon existing topography and permit plan and record documentation of Landfill liner grades. The Landfill surface elevations are determined from aerial survey data at the time of design.

4.4.2.2 Leachate

The occurrence of leachate within the Landfill is addressed by the leachate management system. Leachate management is accomplished through the use of a leachate drainage

layer, perforated collection piping, liquid pumping and discharge to the sanitary sewer system.

For this reason, it is not expected that free liquids will be encountered during the drilling of the vertical extraction wells. If free liquids are encountered, the drilling contractor will attempt to drill through the perched zone of liquids allowing drainage into the underlying waste mass and the leachate collection system. In the event that the zone of perched liquids cannot be penetrated, the well installation may be terminated and relocated. If necessary, appropriate measures will be taken to complete the well installation procedure at a nearby location.

If perched liquids are observed within the vertical extraction wells after installation and it is determined that the liquid level is restrictive to efficient LFG extraction, the leachate level will be reduced. This is typically accomplished by periodic pumping of the liquids using either electric or pneumatic pumping systems. Liquids removed from the well casings will be discharged to the sanitary sewer system in accordance with applicable permits.

4.4.2.3 Vertical Wells

Vertical extraction wells constructed for LFG collection are of sufficient cross-section to allow for their proper construction and completion, including centering of the pipes and placement of gravel backfill. The vertical wells will be constructed under supervision of a construction quality assurance program implemented by the Landfill and verified to be properly constructed.

4.4.2.4 Horizontal Wells

Horizontal LFG collection wells are also used to control LFG emissions and are typically buried in 50 to 100 feet of waste as waste lifts are constructed vertically. Horizontal LFG collection trenches are installed across active areas and tied into adjacent GCCS piping with solid pipe or risers. Due to the propensity for air intrusion since the horizontal trenches are normally completed in shallow trenches across new waste, the horizontal wells are typically operated after placement of at least one to two subsequent lifts of refuse. In addition, the perforated piping portion of the horizontal collectors are normally offset from side slopes to prevent air intrusion from the side slope.

4.4.2.5 Component Short Circuiting

Air intrusion control will be verified through monitoring of LFG quality at the extraction components, monitoring of surface emission levels and maintenance of the landfill cover in accordance with NSPS requirements. Separation of the collection elements from the refuse is accomplished by placing gravel backfill in the annular borehole space around extraction well casings, providing a filter pack between the refuse and the LFG collection elements.

The potential for direct venting of the LFG to the atmosphere is limited by operating the GCCS under a controlled application of vacuum and is monitored by quarterly monitoring of surface emissions (see Section 4.2).

4.4.2.6 Gravel Backfill

Gravel of sufficient size is specified to prevent penetration or blockages of the LFG collector pipe perforations. Gravel (non-calcareous) to be utilized will be typically nominal one-inch to three-inch particle size.

4.4.3 Landfill Gas Extraction Component Connections to LFG Transmission Piping

> **§60.759(b)(3)** Collection devices may be connected to the collection header pipes below or above the landfill surface. The connector assembly shall include a positive closing throttle valve, any necessary seals and couplings, access couplings and at least one sampling port. The collection devices shall be constructed of PVC, HDPE, fiberglass, stainless steel, or other non-porous material of suitable thickness.

The collection devices are connected to the collection header pipes using lateral piping. The lateral piping is connected to the header piping either above or below the landfill surface, as required by field conditions at the time of installation. The connector assemblies (vertical extraction wellheads) are located above grade. These assemblies include a positive closing throttle valve, necessary seals and couplings, access ports and couplings, and a minimum of two sampling ports. The collection devices are constructed of PVC, HDPE, fiberglass, corrosion-resistant steel, and other non-porous materials of suitable thickness. The GCCS components are designed to withstand anticipated installation, static, settlement, overburden, and traffic loads.

4.5 Compliance with §60.759(c)(1) or (2)

> **§60.759(c)** Each owner or operator seeking to comply with §60.752(b)(2)(i)(A) shall convey the landfill gas to a control system in compliance with §60.752(b)(2)(iii) through the collection header pipe(s). The gas mover equipment shall be sized to handle the maximum gas generation flow rate expected over the intended use period of the gas moving equipment using the following procedures:

Compliance with §60.759(c) is discussed in the following sections.

4.5.1 Existing Landfill Gas Flow Rate Data

> **§60.759(c)(1)** For existing collection systems, the flow data shall be used to project the maximum flow rate. If no flow data exists, the procedures in paragraph (c)(2) of this section shall be used.

At the time of this report, an active GCCS has been constructed and is operating at the Landfill. The LFG mover equipment has been sized to handle the LFG flow rate expected over the intended use period of the LFG moving equipment.

LFG generation projections are provided in Appendix C.

4.5.2 Future Landfill Gas Flow Rate Estimates

> **§60.759(c)(2)** For new collection systems, the maximum flow rate shall be in accordance with §60.755(a)(1).

In compliance with §60.752(b)(2)(ii)(A), the maximum expected LFG flow rate for the GCCS is based on LFG modeling and site specific LFG flow data. As specified in 40 CFR 60.759(c)(1), the LFG mover equipment has been sized to handle the maximum LFG generation rate expected over the intended use period of the LFG moving equipment. Additional control device capacity will be installed if warranted in accordance with the NSPS.

LFG generation projections are provided in Appendix C.

4.6 Alternatives and Compliance with §60.752(b)(2)

> **§60.752(b)(2)** If the calculated NMOC emission rate is equal to or greater than 50 megagrams per year, the owner or operator shall:

4.6.1 Submit a Design Plan

> **§60.752(b)(2)(i)** Submit a collection and control system design plan prepared by a professional engineer to the Administrator within 1 year:

A Tier 1 analysis conducted in 1997 indicated the Landfill exceeded the 50 megagrams per year (Mg/yr) threshold. A Design Plan was prepared in 1998 within one year of the Tier 1 analysis which indicated the Landfill exceeded 50 Mg/yr of NMOCs.

On behalf of WPWMA, Cornerstone prepared this GCCS Design Plan to update and replace the most recent version of the GCCS Design Plan. WPWMA is submitting this Design Plan update to the PCAPCD, with a copy sent to the USEPA Region IX office consistent with NSPS requirements. Refer to Table 2 for further details.

4.6.2 Alternatives to the NSPS

> **§60.752(b)(2)(i)(B)** The collection and control system design plan shall include any alternatives to the operational standards, test methods, procedures, compliance

measures, monitoring, record keeping or reporting provisions of §60.753 through §60.758 proposed by the owner or operator.

A number of alternatives to the operational standards, test methods, procedures, compliance measures, monitoring, record keeping or reporting provisions of §60.753 through §60.758 of the NSPS are proposed at this time. These alternatives are discussed in Appendix B of this document.

4.6.3 Specifications for Active Collection Systems

As stated in Sections 4.1 through 4.5 of this Design Plan, the GCCS proposed at the Landfill complies with the specifications for active collection systems as stipulated in §60.759 of the NSPS. If future expansions of the GCCS are necessary, they will be designed to comply with the NSPS requirements or any approved alternatives**.**

4.6.4 Installation of Landfill Gas Collection and Control System

§60.752(b)(2)(ii) Install a collection and control system within 18 months of the submittal of the design plan under paragraph (b)(2)(i) of this section that effectively captures the gas generated within the landfill.

§60.752(b)(2)(ii)(A)(2) Collect gas from each area, cell, or group of cells in the landfill in which the initial solid waste has been placed for a period of:

§60.752(b)(2)(ii)(A)(2)(i) 5 years or more if active; or

§60.752(b)(2)(ii)(A)(2)(ii) 2 years or more if closed or at final grade;

Refer to Table 2 for further details regarding §60.752(b)(2)(ii). Future expansions to the GCCS will proceed in accordance with the schedules under paragraphs (i) and (ii) of this section.

§60.752(b)(2)(ii)(A)(3) Collect gas at a sufficient extraction rate;

§60.752(b)(2)(ii)(A)(4) Be designed to minimize off-site migration of gas.

In compliance with §60.752(b)(2)(ii)(A)(3) and (4), the GCCS is designed to extract LFG at a sufficient rate to minimize the potential for off-site subsurface LFG migration and surface emissions of LFG. This is achieved by sizing and installing sufficient collection elements, transmission piping, blower(s), and flare for the estimated maximum flow rate of LFG.

The GCCS is designed to collect LFG at a sufficient rate, which per the definition in §60.751 means to maintain a negative [gage] pressure (vacuum) at the wellheads without causing air infiltration. Application of a negative gage pressure and minimization of air infiltration will be verified by monitoring the static pressure and nitrogen or oxygen concentrations of the LFG at the extraction points.

Each extraction point will be monitored on a minimum of a monthly basis in accordance with 40 CFR §60.753 (b) and (c). Monitoring will be performed for pressure, temperature, oxygen and/or nitrogen, at a minimum.

Verification of the GCCS's ability to minimize the potential for off-site subsurface LFG migration will be achieved through the routine monitoring of perimeter LFG monitoring probes installed around the Landfill.

The Landfill will monitor the GCCS extraction points, after installation, for static pressure and for LFG quality in accordance with NSPS requirements and will continue to monitor the perimeter LFG monitoring locations to detect potential for off-site subsurface LFG migration. If off-site LFG migration is detected, the Landfill will take the necessary actions in accordance with NSPS requirements.

4.6.5 Control Systems

> **§60.752(b)(2)(iii)** Route all the collected gas to a control system that complies with the requirements in either paragraph (b)(2)(iii)(A), (B) or (C) of this section.

The control systems have the ability to utilize the LFG collected as part of the GCCS. The required operational performance of these components is stipulated by §60.752(b)(2)(iii) which states:

> **§60.752(b)(2)(iii)(A)** An open flare designed and operated in accordance with §60.1
>
> **§60.752(b)(2)(iii)(B)** A control system designed and operated to reduce NMOC by 98 weight-percent, or, when an enclosed combustion device is used for control, to either reduce NMOC by 98 weight percent or reduce the outlet NMOC concentration to less than 20 parts per million by volume, dry basis as hexane at 3 percent oxygen. The reduction efficiency or parts per million by volume shall be established by an initial performance test, required under §60.8 using the test methods specified in §60.754(d).
>
> **§60.752(b)(2)(iii)(C)** Route all collected gas to a treatment system that processes the collected gas for subsequent sale or use. All emissions from any atmospheric vent from the gas treatment system shall be subject to the requirements of paragraph (b)(2)(iii)(A) or (B) of this section.

LFG collected at the Landfill is routed to a 75.9 Million British Thermal Units per hour (MMBTU/hr) (2,500 scfm at 55 percent methane) capacity enclosed flare with a destruction efficiency of at least 98 percent. A new proposed 90 MMBTU/hr (3,000 scfm at 50 percent methane) capacity enclosed flare with a destruction efficiency of at least 99 percent is to be installed at the site in 2016.

The flare operating temperature and LFG flow rate is monitored and recorded a minimum of every 15 minutes with a paperless recorder in accordance with §60.756(b). The flare exhaust temperature is monitored using thermocouples installed within the flare stack. The LFG flow rate is measured by a continuous flow metering device installed along the LFG piping, downstream of the blowers. There are no bypass valves or other conveyances that will allow untreated LFG to be discharged to the atmosphere.

The flare is monitored for the presence of a flame, indicating that combustion is occurring. Monitoring for the presence of a flame is accomplished by an ultraviolet (UV) flame scanner, thermocouple, or comparable device. In the event that a flame is not detected, indicating that the combustion process has been disrupted, the monitoring system will automatically:

a) Eliminate power to the LFG blowers; and

b) Initiate the closure of a pneumatic-activated valve at the inlet to the flare (there is no bypass around the control device).

Stopping the blowers will cause the LFG extraction process to cease. Closing the inlet valve to the flare will eliminate the potential for direct venting of LFG through the control device system.

A small enclosed flare at the LFGTE facility is operated under PCAPCD Permit Number PLWR-05-01. The small flare has a capacity of 13.9 MMBTU/hr (450 scfm at 55 percent methane) and is not permitted to operate at the same time as the large flare, except for a one (1)-hour transition time when switching from operation of one flare to the other. The small flare has a destruction efficiency of at least 98 percent, and is equipped with an alarm and automatic blower and LFG supply shutoff valve system to isolate the flare from the landfill gas supply line in the event of a failure.

A portion of the LFG from the Landfill is processed by the LFGTE facility. The LFGTE facility is capable of processing the maximum flow of LFG from the landfill, around 3,300 scfm. LFG that is not utilized by the power plant is routed to the WPWMA flare or small flare control devices.

In the event that LFG extracted from the landfill exceeds the capacity of the control systems, additional control mechanisms will be installed. These additional control mechanisms may include, but are not limited to, installing additional or upgraded control devices or installation of beneficial-use facilities.

LIMITATIONS

The work product included in the attached was undertaken in full conformity with generally accepted professional consulting principles and practices and to the fullest extent as allowed by law we expressly disclaim all warranties, express or implied, including warranties of merchantability or fitness for a particular purpose. The work product was completed in full conformity with the contract with our client and this document is solely for the use and reliance of our client (unless previously agreed upon that a third party could rely on the work product) and any reliance on this work product by an unapproved outside party is at such party's risk.

The work product herein (including opinions, conclusions, suggestions, etc.) was prepared based on the situations and circumstances as found at the time, location, scope and goal of our performance and thus should be relied upon and used by our client recognizing these considerations and limitations. Cornerstone shall not be liable for the consequences of any change in environmental standards, practices, or regulations following the completion of our work and there is no warrant to the veracity of information provided by third parties, or the partial utilization of this work product.

The modeling techniques used by Cornerstone and the LFG industry are, by definition, hypothetical, and can only be used as a very general tool for producing a range of estimates to aid in determining the direction of further investigations. Actual LFG generation and collection rates are dependent on many variables, including: refuse composition, moisture, pH, cover soil permeability, well spacing, continuing fill rates, etc. Typically these parameters are not well defined at the time of modeling and/or differ somewhat from those actually experienced during future site operation.

The modeling provided herein was performed with today's current standards of practice and no warranty or representation, expressed or implied, is made, as to the actual LFG production that will occur in the future. Opinions and recommendations contained in this report are based on the information available and certain assumptions that were deemed reasonable when our services were performed. We are not responsible for the impacts of any changes in information, site operations or methods that may change in the future.

TABLES

TABLE 1 – SUMMARY OF LANDFILL GAS COLLECTION AND CONTROL SYSTEM DESIGN PLAN

Regulatory Citation	Report Reference	Appendix E Reference[1]	Regulatory Requirement	Implementation of Regulatory Requirement
60.759 (a)(1)	Section 4.1	Page E-3, Section 3	Design Plan must address depth of refuse, refuse LFG generation rates and flow characteristics, cover properties, LFG system expandability, leachate and condensate management, accessibility, compatibility with filling operations, integration with closure end-use, air intrusion control, corrosion resistance, fill settlement, resistance to the refuse decomposition heat.	The Landfill Design Plan addresses all of the requirements listed under §60.759 (a)(1).
§60.759 (a)(2)	Section 4.2	Page E-3, Section 4	LFG collection devices shall be installed at a sufficient density to control surface emissions and subsurface migration of LFG.	The LFG collection devices have been designed to control surface emissions and subsurface migration of LFG.
§60.759 (a)(3)(i)	Section 4.3.1	Page E-3, Section 5	Areas containing asbestos or other non-degradable materials may be excluded from coverage by the LFG collection and control system (GCCS).	The Landfill does not accept asbestos.
§60.759 (a)(3)(ii)	Section 4.3.2	Page E-3, Section 6	Areas considered to be non-productive (contributing less than one percent of the total non-methane organic compounds (NMOC) from the landfill) may be excluded from coverage of the landfill GCCS.	There are currently no non-productive areas at the Landfill.
§60.759 (b)(1)	Section 4.4.1	Page E-5, Section 7	Landfill GCCS components shall be constructed of PVC, HDPE or other non-porous corrosion resistant materials.	Landfill GCCS components shall be constructed of PVC, HDPE or other non-porous corrosion resistant materials.

Regulatory Citation	Report Reference	Appendix E Reference[1]	Regulatory Requirement	Implementation of Regulatory Requirement
	Section 4.4.1	Page E-5, Section 8	Landfill GCCS components shall have suitable dimensions to convey the maximum LFG flow rate and withstand future settlement, overburden and traffic loads.	Landfill GCCS components were designed to accommodate the maximum LFG flow rate and withstand future settlement, overburden and traffic loads.
	Section 4.4.1	Page E-5, Section 9	Expansion of the landfill GCCS will occur as needed to meet LFG emissions and migration standards.	Expansion of the landfill GCCS will occur as needed following LFG emissions and migration standards.
	Section 4.4.1	Page E-5, Section 10	Extraction well perforations will control head loss and air infiltration throughout the system,	The LFG collection elements shall be constructed to minimize head loss and prevent excessive air infiltration into the system.
§60.759 (b)(2)	Section 4.4.2	Page E-5, Section 11	Extraction wells must not endanger the landfill base liner and must address the occurrence of water in the landfill.	The extraction wells are designed based on depths of refuse which are calculated at the time of the design of the GCCS based upon existing topography and permit plan and record documentation of Landfill liner grades. The Landfill surface elevations are determined from survey data at the time of design. Liquids in the refuse are addressed by the leachate and condensate management systems.
	Section 4.4.2	Page E-6, Section 12	Suitable cross-section of the well holes and trenches is required for construction and completion of the collection elements.	The vertical boreholes will be constructed with sufficient cross section to allow for the proper construction of the collection elements.

Regulatory Citation	Report Reference	Appendix E Reference[1]	Regulatory Requirement	Implementation of Regulatory Requirement
	Section 4.4.2	Page E-6, Section 13	Landfill GCCS components must be designed to control air intrusion, prevent LFG from escaping the GCCS, and prohibit refuse from entering the GCCS.	Control of air intrusion and the escape of LFG from the system will be accomplished through the monitoring of the landfill GCCS, operating the system under vacuum and continued maintenance of the landfill cover. The refuse is prohibited from entering the collection devices by gravel backfill or other approved materials placed in the hole or trench separating the refuse from the LFG collection elements.
	Section 4.4.2	Page E-6, Section 14	Gravel backfill in the extraction wells and trenches shall not obstruct pipe perforations.	Backfill of sufficient size will be used to prohibit entry or blockage of the collector perforations.
§60.759 (b)(3)	Section 4.4.3	Page E-6, Section 15	Collection device connections may be above or below ground, must include a positive closing throttling valve, necessary seals, access couplings, and at least one monitoring point.	The collection devices shall be connected to the collection header pipe and will include a positive closing throttling valve, necessary seals, access couplings, and at least one monitoring point.
§60.759 (c)	Section 4.5	Page E-6, Section 16	The collection header pipes must be adequate to handle the maximum LFG flow rate.	The collection header pipes are adequate to handle the current maximum LFG flow rate.
§60.752 (b)(2)(i)	Section 4.6.1	Page E-3, Section 2	Submit a collection and control system design plan prepared by a professional engineer to the Administrator within 1 year. Landfill GCCS Design Plan must be certified, sealed and signed by a professional engineer.	The GCCS Design Plan has been certified, sealed and signed by a professional engineer. See Table 2, below, for further details.

Regulatory Citation	Report Reference	Appendix E Reference[1]	Regulatory Requirement	Implementation of Regulatory Requirement
§60.752 (b)(2)(i)(B)	Section 4.6.2		The GCCS Design Plan shall include any alternatives to the operational standards, test methods, procedures, compliance measures, monitoring, record keeping or reporting provisions of §60.753 through §60.758 proposed by the owner or operator.	The GCCS Design Plan includes alternatives per the requirements by the owner or operator in Appendix B.
§60.752 (b)(2)(ii)(A)(2)	Section 4.6.4	Page E-2, Section 2	LFG collection shall occur in active cells with waste in place for five years or more; in closed cells with waste at final grade for two years or more.	The landfill GCCS components will be installed following NSPS schedule requirements.
§60.752 (b)(2)(ii)(A)(3)	Section 4.6.4	Page E-2, Section 3	LFG extraction wells shall apply a negative gage pressure to maintain a sufficient extraction rate of LFG without causing air infiltration.	A negative gage pressure shall be applied to the LFG collection elements via a blower. The Landfill will monitor the landfill GCCS wellheads for static pressure and indications of air infiltration following NSPS operating standards.
§60.752 (b)(2)(ii)(A)(4)	Section 4.6.4	Page E-2, Section 4	Subsurface migration of LFG will be controlled.	The landfill GCCS shall control potential off-site subsurface migration through proper operation of the GCCS and control will be verified by the monitoring of perimeter monitoring probes installed at the site.
§60.752 (b)(2)(iii)	Section 4.6.5		Route all the collected LFG to a control system.	The landfill GCCS shall route the collected LFG to a control system that complies with the requirements §60.752 (b)(2)(iii)(A), (B), or (C).

Regulatory Citation	Report Reference	Appendix E Reference[1]	Regulatory Requirement	Implementation of Regulatory Requirement
§60.753(a)	Section 4.1		Operate the collection system such that LFG is collected from each area, cell, or group of cells in the MSW landfill in which solid waste has been in place for: (1) 5 years or more if active; or (2) 2 years or more if closed or at final grade.	The GCCS is and will be installed to collect LFG from all areas of the landfill that conform to this requirement. Since the Landfill is active, expansion of the GCCS will be as required and in accordance with this requirement.
§60.753(b)	Section 5.1 Section 6		Operate the collection system with negative pressure at each well head.	Extraction wells shall operate under a negative pressure, except for any approved exemptions and alternatives.
§60.753(c)	Section 6.1.3		Operate each interior well head in the collection system with a LFG temperature of less than 55° C and with either a nitrogen level less than 20 percent or an oxygen level less than 5 percent. The owner or operator may establish a higher operating temperature, nitrogen, or oxygen value at a particular well. A higher operating value demonstration shall show supporting data that the elevated parameter does not cause fires or significantly inhibit anaerobic decomposition by killing methanogens.	Extraction wells will operate under these conditions, except for any approved exemptions and alternatives.
§60.755(a)(1)(iii)	Section 2.1.4 Section 3.3 Section 4.1	Page E-6, Section 17	§60.755 (a)(1) For purposes of calculating the maximum expected LFG generation flow rate from the landfill to determine compliance with §60.752 (b)(2)(iii)(1), one of the following equations shall be used. The k and L_o factors should be those published in the most recent Compilation of Air Pollutant Emission Factors (AP-42) or other site-specific values demonstrated to be appropriate and approved by the Administrator.	The maximum flow for evaluating the initial enclosed flare for the GCCS was derived from the USEPA NSPS-based model using site specific data in accordance with §60.755 (a)(1)(iii). Following installation of the initial GCCS, subsequent GCCS expansion

Regulatory Citation	Report Reference	Appendix E Reference[1]	Regulatory Requirement	Implementation of Regulatory Requirement
			§60.755 (a)(1)(iii) If a collection and control system has been installed, actual flow data may be used to project the maximum expected LFG generation flow rate instead of, or in conjunction with, the equations in paragraphs (a)(1)(i) and (ii) of this section.	sizing was based on actual flow data and was used to project future flows.
§60.756	Section 6.2.5		Monitoring of Operations	The WPWMA will comply with the provisions of this rule.
§60.757	Section 5.1.4		Reporting Requirements	The WPWMA will comply with the provisions of this rule.
§60.758	Section 6		Recordkeeping Requirements	The WPWMA will comply with the provisions of this rule.

(1) From Appendix E ("Collection System Design Plans") of the NSPS Enabling Documents ("Municipal Solid Waste Landfills, Volume 1: Summary of the Requirements for the New Source Performance Standards and Emission Guidelines for Municipal Solid Waste Landfills", EPA-453R/96-004).

TABLE 2 - LANDFILL GAS COLLECTION AND CONTROL SYSTEM DESIGN REVIEW CHECKLIST

Landfill Site Name: *Western Regional Sanitary Landfill*
Location of Landfill: *3195 Athens Avenue, Lincoln, California*
Landfill Owner: *County of Placer*
Date of Submittal: *May 2016*

Goals for the GCCS: (control migration) (control emissions) (safety)
(circle all that apply, add more as appropriate)

Is the GCCS proposed to be (active) or passive? (circle one)

The proposed GCCS is active in nature and should serve to mitigate the potential for both subsurface and airborne migration, as well as the potential for accumulation in occupied structures.

---

1. Was the design certified by a PE? **60.752(b)(2)(i)** (Yes) No
(circle one)

   Maura Dougherty is a Registered Professional Engineer in California and has certified this Gas Collection and Control System (GCCS) Design Plan as the design engineer.

2. Was the design submitted within 12 months of the first report of the site exceeding 50 Mg/yr. of NMOC's? **60.752(b)(2)(i)** (Yes) No
(circle one)

   If no, describe circumstances: *On behalf of the Western Placer Waste Management Authority, Cornerstone Environmental Group, LLC has prepared this landfill gas collection and control system (GCCS) Design Plan to update and replace the existing GCCS Design Plan submitted in 2012. The facility's initial GCCS Design Plan (1998) was submitted in accordance with the NSPS compliance schedule and or local PCAPCD rules and regulations.*

3. Is the GCCS planned to be operational within 30 months of the first report of the site exceeding 50 MG/yr of NMOC's? **60.752(b)(2)(ii)** (Yes) No
(circle one)

   If no, describe circumstances: *At the time of this report, an active GCCS has been constructed and is operating at WSRL.*

4. Does the GCCS comply with the 2 year/5 year rule? **60.752(b)(2)(ii)(A)(2)**
   Yes (circle one) No

   If no, describe circumstances: *Please reference Section 4.6.4 of the Design Plan.*

5. What is the design life of the GCCS? **60.752(b)(2)(v)**
   (If less than 15 years describe why) *The design life of the GCCS includes the operational period of the facility up to 20 years. The system has been designed to accommodate expansion as needed in the future. Individual components of the GCCS will be replaced or repaired as age and usage reduce their efficiency.*

6. Is the GCCS design for the ~~ma~~ximum expected flow rates during its design life? **60.752(b)(2)(ii)(A)(1)** Yes (circle one) No

   If no, describe circumstances: *Please reference Section 4.5 of the Design Plan.*

7. Describe the measures taken to control lateral LFG migration in the design. If no measures were taken, describe why? **60.752(b)(2)(ii)(A)(4)** *The design of the GCCS uses active extraction to mitigate the potential for lateral landfill gas (LFG) migration. This process is enhanced by the presence of a low-permeability soil and/or flexible membrane liner (FML) base liner system as well as a low-permeability soil and/or FML final cap system where applicable. Please reference Section 4.1 of the Design Plan.*

8. If a passive system is planned, are the necessary liners in place? **60.752(b)(2)(ii)(B)(2)**
   Yes No (circle one)
   If no, describe circumstances:
   Not Applicable – an active system is installed and operating.

9. Is adequate density of collectors planned? Refer to Section 5.1 Yes (circle one) No

   If no, describe circumstances:
   Please reference Section 4.2 of the Design Plan.

10. Is the LFG Conveyance System sized properly? Refer to Section 5.2
    Yes (circle one) No

    The LFG conveyance system is adequately sized to handle the future peak LFG generation rate calculated using the United States Environmental Protection Agency

(USEPA) LandGEM V3.02, and is expandable. The LFG conveyance system may be expanded to handle future LFG generation rates in accordance with the New Source Performance Standards (NSPS) to mitigate surface and lateral LFG migration. Please reference Sections 4.4.1.2 and 4.6.5 of the Design Plan.

11. Is the LFG planned to be routed to a control device? **60.752(b)(2)(iii)**

    (Yes) No
    (circle one)

    Please reference Section 4.6.5 of the Design Plan.

12. Describe the control device utility flare (enclosed flare) other
    (circle one)

    The control devices installed consist of two enclosed LFG flares rated for 2,500 and 450 standard cubic feet per minute (scfm) of LFG at 50 percent methane, respectively. The flares are operated in accordance with §60.752(b)(2). The Landfill also provides LFG to an onsite Third Part Power Plant operated under a separate permit. A proposed 3,000 scfm enclosed flare has been proposed for installation in 2017. Please reference Section 4.6.5 of the Design Plan.

13. If the control device is a flare, does it include continuous temperature monitoring and a flow measurement device? **60.756(b) and (c)** (Yes) No
    (circle one)

    If no, describe circumstances: *The WPWMA flare and the small flare at the LFGTE facility have paperless recorders which monitor and record data, including both the flares' operating temperatures and flow rates to demonstrate combustion and the inlet LFG flow rate, in accordance with §60.756. Please reference Section 4.6.5 of the Design Plan.*

14. Is the flare sized properly? Refer to section 5.3 of the student manual.

    (Yes) No
    (circle one)

    The flares are adequately sized to accommodate the predicted flow rate in accordance with §60.752(b)(2)(iii)(B). Please reference Section 4.6.5 of the Design Plan.

15. If a control device other than a flare is planned, describe the estimated hours and duration it will be down for maintenance per year:

    The WPWMA flare will act as the primary control device. The small flare at the LFGTE facility is used for handling excess LFG not utilized by the power plant if the excess LFG is of insufficient quantity for operating the WPWMA flare.

16. Operational Issues **60.753(b), (c), (d), (e), (f)**
Will the GCCS be operated with a vacuum at every well? (Yes) No
(circle one)

The GCCS will be operated with a vacuum at each extraction point, with the exception of mitigating circumstances under §60.753(b)(1).

17. Will the GCCS be operated at the appropriate LFG temps? (Yes) No
(circle one)

The GCCS is intended to operate at LFG temperatures below 55ºC (131ºF). Please see Section 4.1.14 for details.

18. Will the GCCS be operated with minimal amounts of air? (Yes) No
(circle one)

The GCCS is designed to prevent excessive air infiltration. Please reference Section 4.1.10 of the Design Plan.

19. Will monitoring be done monthly to confirm these operational issues?
(Yes) No
(circle one)

Monitoring will be conducted in accordance with NSPS requirements. Please reference Section 4.6.4 of the Design Plan.

20. Will surface emissions monitoring be completed? (Yes) No
(circle one)

Monitoring will be conducted in accordance with NSPS requirements. Please reference Section 4.2 of the Design Plan.

21. Will the blower automatically be shutdown if the control device is inoperable?
(Yes) No
(circle one)

The blower system will automatically be shut down if the control device becomes inoperable. Please reference Section 4.6.5 of the Design Plan.

22. Does the GCCS include fittings to allow connection of additional collectors if necessary in the future? **60.756(2)** (Yes) No
(circle one)

If no, describe circumstances: *The header system incorporates tees with blind flanges along the transmission piping to facilitate expansion of the system, including additional collectors and control devices. Additionally, high density polyethylene*

(HDPE) piping can be readily modified to accept tees or other fittings necessary for system expansion.

23. Does the wellhead for all collectors include at least one sample port and one thermometer port? **60.756(2)** (Yes) No

(circle one)

If no, describe circumstances: *The wellheads for all collectors include at least one sample port and one thermometer port. Please reference Section 4.6.4 and Appendix A of the Design Plan.*

APPENDIX A
2016 GCCS DESIGN DRAWINGS

CONSTRUCTION PLANS
FOR 2016 GCCS EXPANSION

WESTERN PLACER WASTE MANAGEMENT AUTHORITY
WESTERN REGIONAL SANITARY LANDFILL
PLACER COUNTY, CALIFORNIA

AUGUST 2016

PREPARED FOR:

WESTERN PLACER WASTE MANAGEMENT AUTHORITY

PREPARED BY:

GOLDER ASSOCIATES INC.
425 LAKESIDE DRIVE
SUNNYVALE, CA 94085
(408) 220-9223

REGIONAL MAP

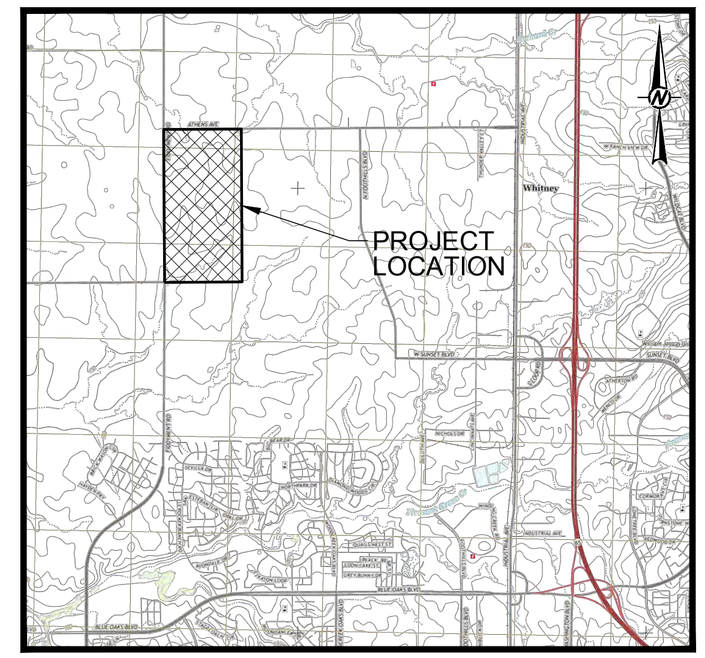

LOCATION MAP

0 4000 8000

1" = 4000' FEET

GENERAL NOTES

SCOPE OF WORK

GENERAL

THE PROPOSED PROJECT IS THE CONSTRUCTION OF EXPANSIONS AND UPGRADES TO THE LANDFILL GAS COLLECTION AND CONTROL SYSTEM (GCCS) AT THE WESTERN REGIONAL SANITARY LANDFILL (WRSL). THESE PLANS SHALL BE USED WITH THE TECHNICAL SPECIFICATIONS AND THE COUNTY OF PLACER STANDARD SPECIFICATIONS AND STANDARD DRAWINGS. THE PROJECT INCLUDES FOUR MAJOR ELEMENTS OF WORK: 1) PROVIDING UPGRADES AND REPLACEMENT OF LANDFILL GAS (LFG) BLOWER AND FLARE EQUIPMENT, INCLUDING MODIFICATIONS TO THE EXISTING CIVIL, MECHANICAL, ELECTRICAL SYSTEMS; 2) EXPANDING THE LFG COLLECTION WELL AND PIPING SYSTEM; 3) PROVIDING AND ERECTING NEW PRE-ENGINEERED METAL BUILDINGS IN THE BLOWER FLARE STATION (BFS); 4) PROVIDING AND INTEGRATING NEW BLOWER/FLARE SYSTEM CONTROLS AND A NEW SUPERVISORY CONTROL AND DATA ACQUISITION (SCADA) SYSTEM FOR COMPREHENSIVE BFS AND SITE REMOTE MONITORING AND CONTROL.

SITE INFORMATION AND DESIGNS IN THESE DRAWINGS ARE DEPICTED SCHEMATICALLY. A BASE CONCEPTUAL PLAN IS SHOWN IN DRAWING 7A. THE PLAN INCLUDES NEW 480VAC ELECTRICAL SERVICE AND EQUIPMENT, A SECOND NEW LFG BLOWER, AND ADDITIONAL SITE PREPARATION AND DECOMMISSIONING WORK AS SHOWN IN THE DRAWINGS OR DESCRIBED IN THE CONTRACT DOCUMENTS. THE CONTRACTOR SHALL SUBMIT SHOP DRAWINGS AS OUTLINED IN GENERAL CONDITIONS C-2. THE CONTRACTOR MAY SUBMIT ALTERNATIVE LAYOUTS AND/OR OTHER VALUE ENGINEERING CHANGE PROPOSALS FOR THE AUTHORITY'S CONSIDERATION. THE FINAL SHOP DRAWINGS SHALL REFLECT THE ALTERNATIVE LAYOUTS AND VALUE ENGINEERING CHANGE PROPOSALS ACCEPTED BY THE AUTHORITY AND SHALL BE FULLY INTEGRATED WITH ACTUAL SITE CONDITIONS AT THE TIME OF CONSTRUCTION. THE FINAL SHOP DRAWINGS AND LAYOUTS MUST COMPLY WITH ALL PERFORMANCE REQUIREMENTS AND FUNCTIONAL INTENTS AS SHOWN OR DESCRIBED IN THESE CONTRACT DOCUMENTS. CONTRACTOR SHALL PROVIDE, INSTALL AND DEMONSTRATE PROPER OPERATION OF ALL EQUIPMENT AND COMPONENTS SHOWN IN THE CONTRACT DRAWINGS AND FINAL SHOP DRAWINGS OR DESCRIBED IN THE CONTRACT SPECIFICATIONS. THE CONTRACTOR SHALL ALSO MAINTAIN THE GCCS AND LFG DELIVERY PROCESS IN CONTINUOUSLY ACTIVE AND COMPLIANT OPERATION AT ALL TIMES THROUGHOUT THE DURATION OF THE PROJECT IN ACCORDANCE WITH THE CONTRACT DOCUMENTS, AND DECOMMISSION REPLACED AND UNNECESSARY COMPONENTS AS DESIGNATED BY THE WPWMA. THESE DESCRIPTIONS ARE FOR GENERAL INFORMATION ONLY. THE CONTRACTOR SHALL BE RESPONSIBLE FOR COMPLETING THE WORK IN ACCORDANCE WITH THE ENTIRETY OF THE CONTRACT DOCUMENTS.

LFG BLOWER FLARE STATION:

THE CONTRACTOR SHALL PROCURE, CONSTRUCT, CONNECT, START-UP, AND SUCCESSFULLY TEST AN APPROVED ENCLOSED LFG FLARE, BLOWERS, AND APPURTENANT CONTROL SYSTEMS AND COMPONENTS FOR THE BFS. THE CONTRACTOR SHALL INSTALL THE NEW GAS BLOWERS IN PARALLEL SO THAT EACH CAN PROVIDE CONSISTENT VACUUM TO THE LANDFILL FOR EXTRACTION OF THE LFG FLOWS REQUIRED FOR REGULATORY COMPLIANCE. THE WELLFIELD HEADER VACUUM SHALL BE CONTROLLED BY ADJUSTING FLOW TO THE FLARE AND DIRECT BLOWER SPEED CONTROL. THE BLOWER DISCHARGE FLOW SHALL BE CONTROLLED TO CONVEY THE LFG AT CONSISTENT PRESSURE TO FUEL THE ADJACENT E2001 POWER GENERATION FACILITY (PGF), WITH AUTOMATIC DIVERSION OF EXCESS LFG TO THE NEW FLARE FOR THERMAL OXIDATION. THE NEW FLARE CONTROLS SHALL INCLUDE AUTOMATED FLOW, COMBUSTION AND EMISSION CONTROLS. THE NEW FLARE SHALL HAVE HIGH OPERATIONAL TURNDOWN CHARACTERISTICS TO ACCOMMODATE LFG FLOWS FROM 2% TO 100% OF ITS MAXIMUM DESIGN CAPACITY. CONTRACTOR SHALL:

- PROVIDE SUBGRADE PREPARATION, ENGINEERED FILL, AND CONCRETE FOUNDATIONS FOR PROPER PLACEMENT AND ANCHORING OF ALL EQUIPMENT AND STRUCTURES.
- PROVIDE THE NEW EQUIPMENT AS PRE-ASSEMBLED AND PRE-WIRED, SKID-MOUNTED, FULLY-INTEGRATED PROCESS PACKAGES.
- EXTEND AND CONNECT NEW AND EXISTING PIPING AND UTILITIES (LFG, PROPANE, COMPRESSED AIR, CONDENSATE, LEACHATE, ETC.)
- COMPLETE ELECTRICAL POWER, CONTROL AND COMMUNICATION CONNECTIONS BETWEEN EXISTING SERVICE PANEL, EXISTING AND NEW CONTROL PANELS, AND FIELD COMPONENTS, A 480VAC 3 PHASE POWER SYSTEM.
- SUCCESSFULLY START-UP, TEST AND OPERATE ALL NEW EQUIPMENT AND CONTROLS.

THE CONTRACTOR SHALL PROVIDE DECOMMISSIONING, DEMOLITION, AND REMOVAL OF THE EXISTING FLARE, 25HP BLOWERS, PIPING AND COMPONENTS, PHASED TO ENABLE INSTALLATION OF THE NEW EQUIPMENT AND STRUCTURES. THE CONTRACTOR SHALL RELOCATE AND REINSTALL EXISTING EQUIPMENT AND EXTEND CONNECTIONS AS SHOWN IN THE PLANS, INCLUDING TWO AIR COMPRESSORS AND A PROPANE STORAGE TANK, TO ENABLE INSTALLATION OF THE NEW EQUIPMENT AND STRUCTURES. THE CONTRACTOR SHALL PROVIDE TEMPORARY POWER, PIPING AND CONTROLS AS NEEDED TO MAINTAIN CONTINUOUS LFG CONVEYANCE TO THE PGF AND EXISTING FLARE FOR THE PROJECT DURATION THROUGH SUCCESSFUL COMPLETION, START-UP, SUSTAINED OPERATION, AND ACCEPTANCE OF THE NEW EQUIPMENT BY THE OWNER.

- IDENTIFY, LOCATE, POTHOLE AND PROTECT ALL EXISTING UNDERGROUND FACILITIES AND UTILITIES IN THE AREAS OF WORK.
- INSTALL TEMPORARY PIPING AND CONTROLS NECESSARY TO PROVIDE CONTINUOUS AND SAFE LFG CONVEYANCE TO THE PGF AND EXISTING FLARE DURING THE ENTIRE PROJECT.
- DECOMMISSION EXISTING FLARE, BLOWERS, APPURTENANT PIPING AND EQUIPMENT AS DESIGNATED BY WPWMA.
- RESTORE AND CLEAN-UP ALL WORK AREAS FOR PROJECT CLOSE-OUT.

LFG COLLECTION SYSTEM:

CONTRACTOR SHALL PROVIDE MATERIALS, LABOR AND EQUIPMENT TO CONSTRUCT NEW LFG EXTRACTION WELLS AND COLLECTORS AND ALL PIPING COMPONENTS AND APPURTENANCES REQUIRED FOR CONNECTION TO EXISTING OPERATIONAL FACILITIES. CONTRACTOR SHALL SUPPLY AND INSTALL LFG EXTRACTION WELLS, COLLECTORS, CONDENSATE DRAINS/SUMPS, CONVEYANCE PIPING, VALVES, FITTINGS AND APPURTENANCES.

SYSTEM CONTROLS AND INTEGRATION:

THE CONTRACTOR SHALL PROVIDE A COMPREHENSIVE CONTROL SYSTEM FOR BOTH AUTOMATED AND MANUAL OPERATION OF THE NEW BLOWER AND FLARE EQUIPMENT. THE FLARE CONTROLS SHALL INCLUDE A PROGRAMMABLE LOGIC CONTROLLER (PLC) THAT COORDINATES AUTOMATIC OPERATION OF THE BLOWERS AND FLARE FOR CONSISTENT CONTROL AND STABILIZATION OF LFG PRESSURES AND FLOWS TO THE PGF AND THE FLARE. THE BLOWER CONTROLS SHALL INCLUDE VARIABLE FREQUENCY DRIVE AND NECESSARY MONITORING AND CONTROL DEVICES TO FACILITATE ACCURATE SETTING AND CONTROL OF BLOWER INLET AND DISCHARGE PRESSURES AND FLOW RATES.

THE CONTRACTOR SHALL PROVIDE A NEW SCADA SYSTEM AND INTEGRATION OF SPECIFIED SIGNALS AND DATA STREAMS FROM BOTH NEW AND EXISTING EQUIPMENT CONTROLS. SCADA SYSTEM SHALL INCLUDE ALL REQUIRED TELEMETRY, CONNECTIONS AND COMPREHENSIVE INTEGRATION WITH EXISTING AND NEW BFS AND SITE EQUIPMENT FOR GRAPHICAL COMMUNICATION OF MONITORING DATA, ALARMS AND OTHER SIGNALS FOR VIEWING, ACCESS AND ADJUSTMENTS BY AUTHORIZED REMOTE SYSTEM OPERATORS.

REGULATORY COMPLIANCE:

THE PLACER COUNTY AIR POLLUTION CONTROL DISTRICT (PCAPCD) WILL ISSUE AN AUTHORITY TO CONSTRUCT (ATC) PERMIT FOR THE NEW FLARE EQUIPMENT. THE CONTRACTOR SHALL PROCURE AND INSTALL THE NEW EQUIPMENT TO OPERATE IN CONTINUOUS COMPLIANCE WITH ALL PERMIT CONDITIONS, PCAPCD REGULATIONS, AND OPERATIONAL REQUIREMENTS AS MAY BE FURTHER DESCRIBED IN THE CONTRACT DOCUMENTS.

THE CONTRACTOR SHALL PROVIDE ALL CONSTRUCTION AND PRODUCTS IN STRICT ACCORDANCE WITH APPLICABLE CODES AND ORDINANCES OF THE COUNTY OF PLACER, INCLUDING ALL APPLICABLE STATE AND FEDERAL REGULATIONS. IT SHALL BE THE RESPONSIBILITY OF THE CONTRACTOR AND EACH SUBCONTRACTOR TO BE IN FULL COMPLIANCE, REGARDLESS OF ANY DISCREPANCIES THAT MAY EXIST WITHIN THE DRAWINGS OR SPECIFICATIONS. IT SHALL BE THE RESPONSIBILITY OF EACH SUBCONTRACTOR TO NOTIFY THE CONTRACTOR, WHO IN TURN SHALL NOTIFY THE OWNER/ENGINEER PRIOR TO PERFORMANCE, IF A CONFLICT EXISTS BETWEEN ANY PORTION OF THE CONTRACT DOCUMENTS OR WORK AND APPLICABLE CODES OR ORDINANCES, OR FOR ANY OTHER APPARENT CONFLICT OR DISCREPANCY OF THE CONTRACT DRAWINGS OR SPECIFICATIONS.

BASIS OF EQUIPMENT DESIGN AND MANUFACTURE: THE CONTRACTOR SHALL PROVIDE EQUIPMENT DESIGNED AND MANUFACTURED TO COMPLY WITH THE REQUIREMENTS OF CURRENT NATIONAL, STATE AND LOCAL CODES AND STANDARDS FOR WASTE GAS PROCESSING EQUIPMENT, INCLUDING BUT NOT LIMITED TO:

- STRUCTURAL DESIGN AISC
- SHOP AND RECORD DRAWINGS ANSI S5.1
- FABRICATION (WELDING) AWS
- ELECTRICAL (COMPONENTS) UL
- ELECTRICAL (WIRING) NEC
- PAINTING, SANDBLAST SSPL, SP-6

IF REQUIRED FOR APPROVED SUBSTITUTIONS, THE CONTRACTOR SHALL PROVIDE ADDITIONAL FOUNDATION OR STRUCTURAL ENGINEERING IN ACCORDANCE WITH THE CALIFORNIA BUILDING CODE (CBC, INTERNATIONAL CONFERENCE OF BUILDING OFFICIALS [ICBO], 2013 EDITION).

INDEX OF DRAWINGS

Sheet Number	Sheet Title	Sheet Number Sequence
T1	TITLE SHEET	1
1	LANDFILL SITE PLAN	2
2	LFG COLLECTION SYSTEM PLAN-SOUTHERN AREA	3
3	VERTICAL LFG EXTRACTION WELL DETAILS	4
4	LFG PIPING DETAILS	5
5	HORIZONTAL LFG COLLECTION DETAILS	6
6	NOT IN CONTRACT	7
6A	BLOWER-FLARE STATION EXISTING CONDITIONS-DECOM PLAN	8
7	NOT IN CONTRACT	9
7A	BLOWER-FLARE STATION CONCEPTUAL SITE PLAN	10
7B	CONDENSATE DETAILS	11
8	STRUCTURAL NOTES AND DETAILS	12
9	BLOWER-FLARE STATION FOUNDATION DETAILS	13
10	PEM STORAGE BUILDING FOUNDATION DETAILS	14
11	EQUIPMENT CANOPY FOUNDATION DETAILS (PRELIMINARY)	15
12	METHANE PROTECTION DETAILS	16
13	NOT IN CONTRACT	17
14	NOT IN CONTRACT	18
14A	BLOWER-FLARE EQUIPMENT TOP ASSEMBLY	19
15	BLOWER-FLARE EQUIPMENT PID LEGEND	20
16	NOT IN CONTRACT	21
16A	BLOWER-FLARE CONCEPTUAL EQUIPMENT PID (1 of 2)	22
17	BLOWER-FLARE EQUIPMENT PID (2 of 2)	23

Sheet Number	Sheet Title	Sheet Number Sequence
E1	NOT IN CONTRACT	24
E2	NOT IN CONTRACT	25
E3	NOT IN CONTRACT	26
E4	NOT IN CONTRACT	27
E5	NOT IN CONTRACT	28
E6	NOT IN CONTRACT	29
E1A	ELECTRICAL ONE LINE DIAGRAM	30
E2A	ELECTRICAL MCC	31
E3A	ELECTRICAL EQUIPMENT SITE PLAN	32
E4A	ELECTRICAL CONDUIT BLOCK DIAGRAM	33
E5A	ELECTRICAL DETAILS	34
E6A	ELECTRICAL FLOOR PLAN, STORAGE BUILDING	35
E7A	ELECTRICAL SITE PLAN REMOVAL	36
E8A	ELECTRICAL ONE LINE DIAGRAM & MCC REMOVAL	37
S1	PEM STORAGE BUILDING COVER SHEET	38
S2	PEM STORAGE BUILDING ANCHOR BOLT PLAN	39
S3	PEM STORAGE BUILDING LOADS & ANCHOR REQUIREMENTS	40
S4	PEM STORAGE BUILDING ANCHOR DETAILS	41
S5	PEM STORAGE BUILDING ROOF FRAME PLAN	42
S6	PEM STORAGE BUILDING SIDEWALL, FRAME LINE A	43
S7	PEM STORAGE BUILDING SIDEWALL, FRAME LINE F	44
S8	PEM STORAGE BUILDING SIDEWALL, FRAME LINE 1	45
S9	PEM STORAGE BUILDING SIDEWALL, FRAME LINE 4	46

Sheet Number	Sheet Title	Sheet Number Sequence
S10	PEM STORAGE BUILDING RIGID FRAME	47
S11	PEM CANOPY BUILDING COVER SHEET	48
S12	PEM CANOPY BUILDING ANCHOR ROD PLAN	49
S13	PEM CANOPY BUILDING ANCHOR DETAILS	50
S14	PEM CANOPY BUILDING LOADS & ANCHOR REQUIREMENTS	51
S15	PEM CANOPY BUILDING PRIMARY STEEL LOCATION PLAN	52
S16	PEM CANOPY BUILDING ROOF FRAME PLAN	53
S17	PEM CANOPY BUILDING ROOF SHEETING PLAN	54
S18	PEM CANOPY BUILDING SIDEWALL, FRAME LINE A	55
S19	PEM CANOPY BUILDING SIDEWALL, FRAME LINE B	56
S20	PEM CANOPY BUILDING SIDEWALL, FRAME LINE 1	57
S21	PEM CANOPY BUILDING CROSS SECTION, FRAME LINE 2	58

THE PROJECT WAS ORIGINALLY DESIGNED AND BID AS A REPLACEMENT OF THE BLOWER/FLARE STATION THAT INCLUDED REUSING SEVERAL COMPONENTS OF THE EXISTING FACILITIES AND 240 VAC MAIN POWER SUPPLY. THE CURRENT PROJECT, BIDDING PROCESS AND BID FORM IS BASED ON UPGRADING THE FACILITY TO USE 480 VAC POWER, REUSING VERY FEW AND SELECTED FACILITIES, AND USING A REVISED LAYOUT SHOWN ON SHEET 7A. ANY REFERENCES TO NEW 240 VAC EQUIPMENT IN THE PLANS OR SPECIFICATIONS ARE INTENDED TO BE 480 VAC.

ABBREVIATIONS

A	COMPRESSED AIR
AB	AGGREGATE BASE
AMP	AMPERE
ASS'Y	ASSEMBLY
B.P.	BRASS PIPE
BTU/HR	BRITISH THERMAL UNITS PER HOUR
CLR	CLEARANCE
CLSM	CONTROLLED LOW STRENGTH MATERIAL
CMP	CORRUGATED METAL PIPE
C	CONDENSATE
CO	CLEAN OUT
CS	CONDENSATE SUMP
DI	DUCTILE IRON
DIA	DIAMETER

DISC	DISCONNECT
E	EASTING OR ELECTRIC
(E)	EXISTING
ELEV.	ELEVATION
ET	COMMUNICATION
E.W.	EACH WAY
F	FAHRENHEIT
FT-MSL	FEET- MEAN SEA LEVEL
FPT	FEMALE PIPE THREAD
GPM	GALLON PER MINUTE
HDG	HOT DIPPED GALVANIZED
HDPE	HIGH DENSITY POLYETHYLENE
I.D.	INSIDE DIAMETER
IN.W.C.	INCH WATER COLUMN (GAUGE)
KOP	KNOCK-OUT-POT

KVA	KILOVOLT-AMP
LFG	LANDFILL GAS
MAX	MAXIMUM
MIN	MINIMUM
MPT	MALE PIPE THREAD
N	NORTHING
N.I.C.	NOT IN CONTRACT
NTS	NOT TO SCALE
NPT	NATIONAL PIPE THREAD
Ø	DIAMETER OR PHASE
O.C.	ON CENTER
O.D.	OUTSIDE DIAMETER
P&ID	PIPING AND INTRUMENTATION DIAGRAM
PSI, PSIG	POUND PER SQUARE INCH, GAUGE

PVC	POLYVINYL CHLORIDE
REF.	REFERENCE
REQ'D	REQUIRED
SCFM	STANDARD CUBIC FEET PER MINUTE
SCH	SCHEDULE
SDR	STANDARD DIMENSION RATIO
SS/SSTL	STAINLESS STEEL
T/C	THERMOCOUPLE
TYP.	TYPICAL
UNO	UNLESS NOTED OTHERWISE
VAC	VOLTS, ALTERNATING CURRENT

REV.	YYYY-MM-DD	DESCRIPTION	PREPARED	DESIGNED	REVIEWED	APPROVED
0	2016-08-19	ISSUED FOR BIDDING	MAL	APW	APW	RVW

SEAL

CLIENT
WESTERN PLACER WASTE MANAGEMENT AUTHORITY
3033 FIDDYMENT ROAD
ROSEVILLE, CA. 95747

CONSULTANT
GOLDER ASSOCIATES, INC.
425 LAKESIDE DRIVE
SUNNYVALE, CALIFORNIA 94085
USA
+[1] (408) 220-9223
www.golder.com

PROJECT
WESTERN REGIONAL SANITARY LANDFILL
2016 GCCS EXPANSION

TITLE
TITLE SHEET

PROJECT NO. 1420152 | REV. 0 | 1 of 58 | DRAWING T1

IF THIS MEASUREMENT DOES NOT MATCH WHAT IS SHOWN, THE SHEET SIZE HAS BEEN MODIFIED FROM: ANSI D

0 1in

Path: \\sacramento\acad\Sites\Western Regional L\FCIVIL 3D\1420152_ GCCS Expansion\Concept 2 (IFB Rev0)\ | File Name: 1420152-T1_GCCS_TITLE SHEET.dwg

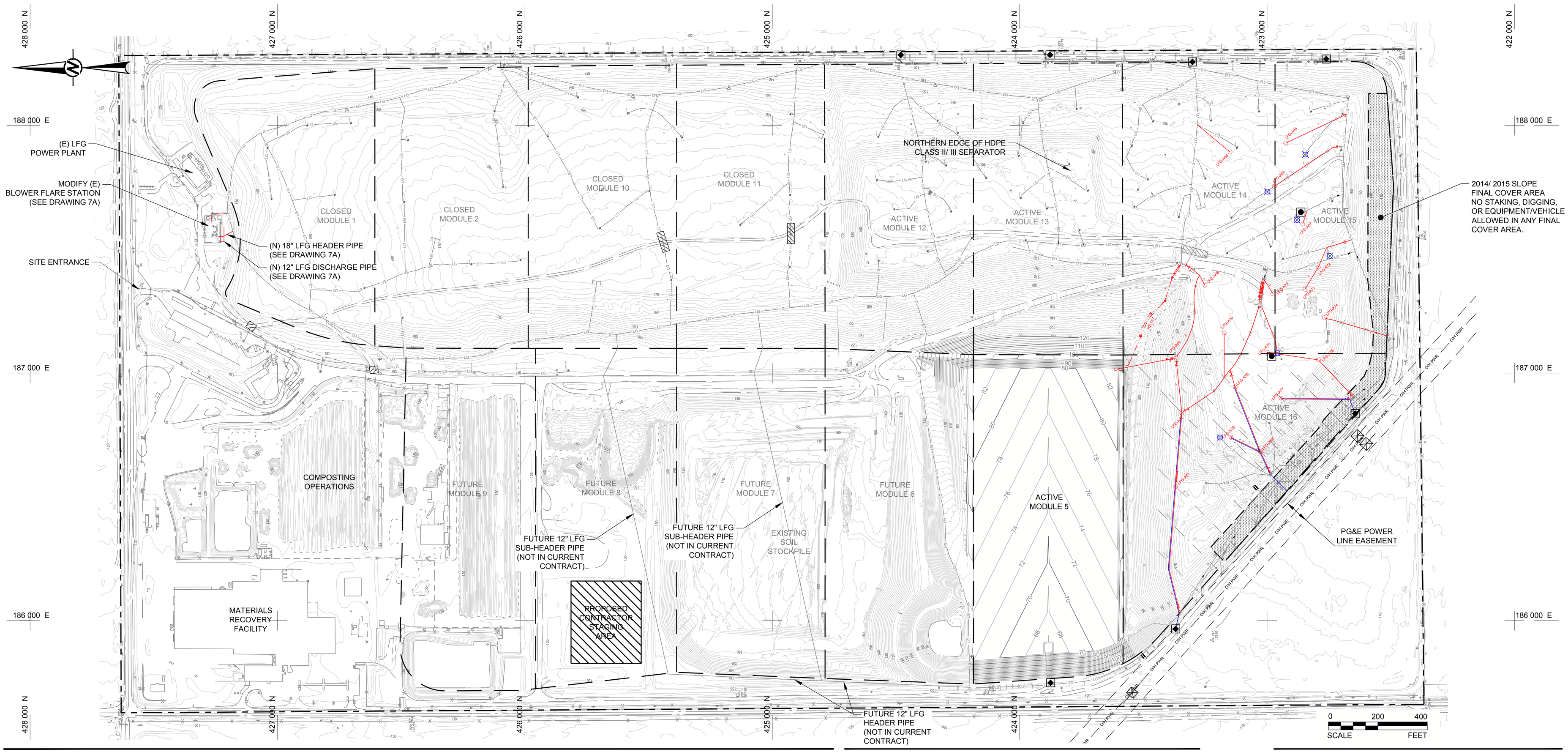

LEGEND

PROPERTY BOUNDARY	(E) LEACHATE COLLECTION SUMP	CONSTRUCT LFG/LEACHATE WELLHEAD (3/2|5)
MODULE LIMITS	(E) PIPE REDUCER	DECOMMISSION (E) LFG COLLECTION WELL (3/2|3)
LG (E) LANDFILL GAS PIPE	(E) LFG PIPE MANIFOLD	CONSTRUCT BUTTERFLY VALVE (5/2|4)
LFG–A5 (E) LFG COLLECTION WELL (INFILL)	(E) ROAD CROSSING	CONSTRUCT PIPE REDUCER(S)
EW– (E) LFG COLLECTION WELL (PERIMETER)	(E) ISOLATION VALVE	CONSTRUCT ROAD CROSSING (4/2|4)
GW–7W (E) LFG COLLECTION WELL (PERIMETER)	CONSTRUCT LFG HORIZONTAL COLLECTOR	CONSTRUCT REMOTE MONITORING STATION (LEACHATE) (SEE NOTE 5)
GM–14X (E) GAS PROBE	CONSTRUCT LFG CONVEYANCE PIPE (ON GRADE)	
MW–11 GROUNDWATER MONITORING WELL	CONSTRUCT CONDENSATE DRAIN TO LCRS (1/1|5)	CONSTRUCT REMOTE MONITORING STATION (LFG) (SEE NOTE 5)
	CONSTRUCT SINGLE CASING LFG EXTRACTION WELL (2/1|3)	CONSTRUCT AIR SUPPLY/ CONDENSATE PIPES (ON GRADE)

NOTES

1. THE LOCATIONS OF THE UTILITIES AND OTHER FACILITIES SHOWN IN THESE DRAWINGS WERE ESTIMATED FROM SITE INFORMATION PROVIDED BY THE OWNER AND ARE SCHEMATIC ONLY. BEFORE STARTING SITE WORK, THE CONTRACTOR SHALL COORDINATE WITH THE OWNER TO DETERMINE, VERIFY AND PROTECT THE ACTUAL LOCATIONS OF ALL UTILITIES AND FACILITIES THAT MAY BE USED OR AFFECTED BY THE WORK (WHETHER SHOWN OR NOT). CONTRACTOR TO CONTACT UNDERGROUND SERVICES ALERT (USA) WITH SUFFICIENT NOTICE TO LOCATE AND PROTECT ALL UTILITIES.
2. CONTRACTOR TO SURVEY AND MARK ALL EXISTING PIPE AND UTILITIES INDICATED ON THE DRAWINGS IN ALL WORK AREAS. CONTRACTOR TO POTHOLE PROPOSED EXCAVATION AREAS TO VERIFY THE LOCATION AND DEPTH OF IDENTIFIED SUBSURFACE FACILITIES. CONTRACTOR SHALL PROTECT ALL FACILITIES FROM DAMAGE AND SHALL REPAIR ALL DAMAGE AT NO COST TO THE OWNER.
3. THE DRAWING SCALES SHOWN ARE FOR GENERAL REFERENCE ONLY. DISTANCES, DIMENSIONS AND OTHER QUANTITIES SHALL NOT BE SCALED OFF THIS DRAWING.
4. THE CONTRACTOR SHALL COORDINATE REQUIREMENTS FOR PERSONNEL ACCESS AND EQUIPMENT STAGING AREAS WITH THE OWNER BEFORE STARTING SITE WORK.
5. SEE SPECIFICATION SECTION 13430 FOR REMOTE MONITORING STATION DETAILS. THE 2 LFG MONITORING STATIONS ARE CONCEPTUAL ONLY, AND WILL BE REVISED BY THE AUTHORITY BEFORE INSTALLATION.

REFERENCE

1. TOPOGRAPHIC SURVEY PROVIDED BY WPWMA, AERIAL PHOTOGRAPHY FLOWN 6-30-2015 BY AMERICAN AERIAL MAPPING, INC.

THE PROJECT WAS ORIGINALLY DESIGNED AND BID AS A REPLACEMENT OF THE BLOWER/FLARE STATION THAT INCLUDED REUSING SEVERAL COMPONENTS OF THE EXISTING FACILITIES AND 240 VAC MAIN POWER SUPPLY. THE CURRENT PROJECT, BIDDING PROCESS AND BID FORM IS BASED ON UPGRADING THE FACILITY TO USE 480 VAC POWER, REUSING VERY FEW AND SELECTED FACILITIES, AND USING A REVISED LAYOUT SHOWN ON SHEET 7A. ANY REFERENCES TO NEW 240 VAC EQUIPMENT IN THE PLANS OR SPECIFICATIONS ARE INTENDED TO BE 480 VAC.

Rev.	YYYY-MM-DD	DESCRIPTION	PREPARED	DESIGN	REVIEW	APPROVED
0	2016-08-19	ISSUED FOR BIDDING	MAL	APW	APW	RVW

CLIENT
WESTERN PLACER WASTE MANAGEMENT AUTHORITY
3033 FIDDYMENT ROAD
ROSEVILLE, CA. 95747

CONSULTANT

GOLDER ASSOCIATES, INC.
425 LAKESIDE DRIVE
SUNNYVALE, CALIFORNIA 94085
USA
+[1] (408) 220-9223
www.golder.com

PROJECT
WESTERN REGIONAL SANITARY LANDFILL
2016 GCCS EXPANSION

TITLE
LANDFILL SITE PLAN

PROJECT No. 1420152 | Rev. 0 | 2 of 58 | DRAWING 1

IF THIS MEASUREMENT DOES NOT MATCH WHAT IS SHOWN, THE SHEET SIZE HAS BEEN MODIFIED FROM: ANSI D

Path: \\sacramento\acad\Sites\Western Regional LF\CIVIL 3D\1420152_GCCS Expansion\Concept 2 (IFB Rev0\) | File Name: 1420152-01_GCCS_SITE PLAN.dwg

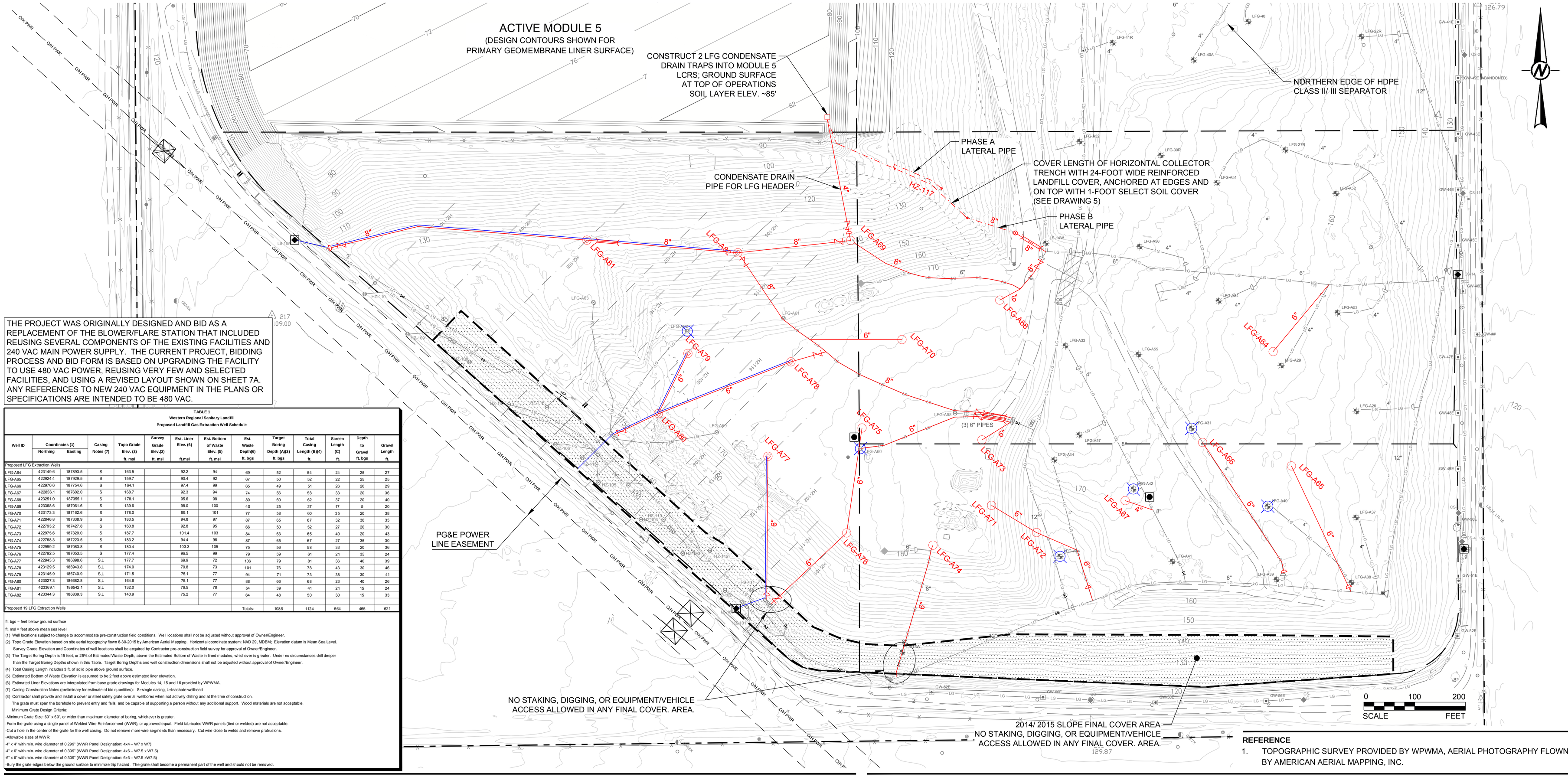

THE PROJECT WAS ORIGINALLY DESIGNED AND BID AS A REPLACEMENT OF THE BLOWER/FLARE STATION THAT INCLUDED REUSING SEVERAL COMPONENTS OF THE EXISTING FACILITIES AND 240 VAC MAIN POWER SUPPLY. THE CURRENT PROJECT, BIDDING PROCESS AND BID FORM IS BASED ON UPGRADING THE FACILITY TO USE 480 VAC POWER, REUSING VERY FEW AND SELECTED FACILITIES, AND USING A REVISED LAYOUT SHOWN ON SHEET 7A. ANY REFERENCES TO NEW 240 VAC EQUIPMENT IN THE PLANS OR SPECIFICATIONS ARE INTENDED TO BE 480 VAC.

TABLE 1
Western Regional Sanitary Landfill
Proposed Landfill Gas Extraction Well Schedule

Well ID	Coordinates (1) Northing	Coordinates (1) Easting	Casing Notes (7)	Topo Grade Elev. (2) ft. msl	Survey Grade Elev.(2) ft. msl	Est. Liner Elev. (6) ft.msl	Est. Bottom of Waste Elev. (5) ft. msl	Est. Waste Depth(6) ft. bgs	Target Boring Depth (A)(3) ft. bgs	Total Casing Length (B)(4) ft.	Screen Length (C) ft.	Depth to Gravel ft. bgs	Gravel Length ft.
Proposed LFG Extraction Wells													
LFG-A64	423149.6	187893.5	S	163.5		92.2	94	69	52	54	24	25	27
LFG-A65	422924.4	187929.5	S	159.7		90.4	92	67	50	52	22	25	25
LFG-A66	422870.6	187754.6	S	164.1		97.4	99	65	49	51	26	20	29
LFG-A67	422856.1	187602.0	S	168.7		92.3	94	74	56	58	33	20	36
LFG-A68	423251.0	187355.1	S	178.1		95.6	98	80	60	62	37	20	40
LFG-A69	423368.6	187061.6	S	139.6		98.0	100	40	25	27	17	5	20
LFG-A70	423173.3	187162.6	S	178.0		99.1	101	77	58	60	35	20	38
LFG-A71	422846.8	187338.9	S	183.5		94.8	97	87	65	67	32	30	35
LFG-A72	422793.2	187427.8	S	160.8		92.8	95	66	50	52	27	20	30
LFG-A73	422975.6	187320.0	S	187.7		101.4	103	84	63	65	40	20	43
LFG-A74	422768.3	187223.5	S	183.2		94.4	96	87	65	67	27	35	30
LFG-A75	422969.2	187083.8	S	180.4		103.3	105	75	56	58	33	20	36
LFG-A76	422792.5	187053.5	S	177.4		96.5	99	79	59	61	21	35	24
LFG-A77	422943.3	186898.6	S,L	177.7		69.9	72	106	79	81	36	40	39
LFG-A78	423129.5	186943.8	S,L	174.0		70.8	73	101	76	78	43	30	46
LFG-A79	423145.9	186740.9	S,L	171.5		75.1	77	94	71	73	38	30	41
LFG-A80	423027.3	186682.8	S,L	164.6		75.1	77	88	66	68	23	40	26
LFG-A81	423369.1	186542.1	S,L	132.0		76.5	78	54	39	41	21	15	24
LFG-A82	423344.3	186839.3	S,L	140.9		75.2	77	64	48	50	30	15	33
Proposed 19 LFG Extraction Wells								Totals:	1086	1124	564	465	621

ft. bgs = feet below ground surface
ft. msl = feet above mean sea level
(1) Well locations subject to change to accommodate pre-construction field conditions. Well locations shall not be adjusted without approval of Owner/Engineer.
(2) Topo Grade Elevation based on site aerial topography flown 6-30-2015 by American Aerial Mapping. Horizontal coordinate system: NAD 29, MDBM; Elevation datum is Mean Sea Level. Survey Grade Elevation and Coordinates of well locations shall be acquired by Contractor pre-construction field survey for approval of Owner/Engineer.
(3) The Target Boring Depth is 15 feet, or 25% of Estimated Waste Depth, above the Estimated Bottom of Waste in lined modules, whichever is greater. Under no circumstances drill deeper than the Target Boring Depths shown in this Table. Target Boring Depths and well construction dimensions shall not be adjusted without approval of Owner/Engineer.
(4) Total Casing Length includes 3 ft. of solid pipe above ground surface.
(5) Estimated Bottom of Waste Elevation is assumed to be 2 feet above estimated liner elevation.
(6) Estimated Liner Elevations are interpolated from base grade drawings for Modules 14, 15 and 16 provided by WPWMA.
(7) Casing Construction Notes (preliminary for estimate of bid quantities): S=single casing, L=leachate wellhead
(8) Contractor shall provide and install a cover or steel safety grate over all wellbores when not actively drilling and at the time of construction. The grate must span the borehole to prevent entry and falls, and be capable of supporting a person without any additional support. Wood materials are not acceptable.
Minimum Grate Design Criteria:
-Minimum Grate Size: 60" x 60", or wider than maximum diameter of boring, whichever is greater.
-Form the grate using a single panel of Welded Wire Reinforcement (WWR), or approved equal. Field fabricated WWR panels (tied or welded) are not acceptable.
-Cut a hole in the center of the grate for the well casing. Do not remove more wire segments than necessary. Cut wire close to welds and remove protrusions.
-Allowable sizes of WWR:
4" x 4" with min. wire diameter of 0.299" (WWR Panel Designation: 4x4 – W7 x W7)
4" x 6" with min. wire diameter of 0.309" (WWR Panel Designation: 4x6 – W7.5 x W7.5)
6" x 6" with min. wire diameter of 0.309" (WWR Panel Designation: 6x6 – W7.5 xW7.5)
-Bury the grate edges below the ground surface to minimize trip hazard. The grate shall become a permanent part of the well and should not be removed.

REFERENCE
1. TOPOGRAPHIC SURVEY PROVIDED BY WPWMA, AERIAL PHOTOGRAPHY FLOWN 6-30-2015 BY AMERICAN AERIAL MAPPING, INC.

LEGEND

- PROPERTY BOUNDARY
- MODULE LIMITS
- (E) LANDFILL GAS PIPE
- (E) LFG COLLECTION WELL (INFILL)
- (E) LFG COLLECTION WELL (PERIMETER)
- (E) LFG COLLECTION WELL (PERIMETER)
- (E) GAS PROBE
- GROUNDWATER MONITORING WELL
- (E) LEACHATE COLLECTION SUMP
- (E) PIPE REDUCER
- (E) LFG PIPE MANIFOLD
- (E) ROAD CROSSING
- (E) ISOLATION VALVE
- CONSTRUCT LFG HORIZONTAL COLLECTOR (1/2|5)
- CONSTRUCT LFG CONVEYANCE PIPE (ON GRADE)
- CONSTRUCT CONDENSATE DRAIN TO LCRS (1/2|5)
- CONSTRUCT SINGLE CASING LFG EXTRACTION WELL (2/2|1)
- CONSTRUCT LFG/LEACHATE WELLHEAD (3/2|5)
- DECOMMISSION (E) LFG COLLECTION WELL (3/2|3)
- CONSTRUCT BUTTERFLY VALVE (5/2|4)
- CONSTRUCT PIPE REDUCER(S)
- CONSTRUCT ROAD CROSSING (4/2|4)
- CONSTRUCT REMOTE MONITORING STATION (LEACHATE) (SEE NOTE 7)
- CONSTRUCT REMOTE MONITORING STATION (LFG) (SEE NOTE 7)
- CONSTRUCT AIR SUPPLY/ CONDENSATE PIPES (ON GRADE)

NOTE(S)
1. CONTRACTOR SHALL CAREFULLY INSPECT THE SITE AND VERIFY ALL DIMENSIONS AND GRADES BEFORE PROCEEDING WITH THE WORK. CONTRACTOR SHALL IMMEDIATELY NOTIFY THE OWNER/ENGINEER OF ANY FOUND DISCREPANCIES.
2. PIPE ALIGNMENTS SHOWN IN THE DRAWINGS ARE INTENDED TO BE A DEPICTION AND NOT AN EXACT OR COMPLETE REPRESENTATION OF THE FINISHED WORK. THE CONTRACTOR SHALL FIELD FIT PIPING TO ACCOMMODATE SITE CONDITIONS THAT VARY FROM THE CONTRACT DOCUMENTS AND/OR HAVE CHANGED OVER TIME. IN ACCORDANCE WITH THE SPECIFICATIONS, THE CONTRACTOR SHALL PROVIDE MINOR ADDITIONAL PIPE, FITTINGS AND OTHER ACCESSORIES REQUIRED TO COMPLETE A PROPERLY FUNCTIONING PIPING ALIGNMENT, EVEN THOUGH SUCH ITEMS AND/OR ALIGNMENTS MAY NOT BE SPECIFICALLY SHOWN IN THE DRAWINGS.
3. ALL EXCAVATIONS SHALL COMPLY WITH APPLICABLE TRENCH SAFETY AND CONFINED SPACE ENTRY REQUIREMENTS.
4. UNLESS NOTED OTHERWISE, CONTRACTOR SHALL INSTALL AND GRADE ALL LFG PIPES TO DRAIN CONTINUOUSLY TO CONDENSATE COLLECTION SUMPS WITH THE FOLLOWING BASIC GRADES AS A MINIMUM:
   - ABOVE GROUND LFG PIPE WITHIN THE LIMIT OF LANDFILLED WASTE: 2.0%
   - BURIED LFG PIPE WITHIN THE LIMIT OF LANDFILLED WASTE: 4.0%
   - BURIED LFG PIPE BELOW ROAD CROSSINGS WITHIN THE LIMIT OF LANDFILLED WASTE: 6%
   - BURIED LFG PIPE IN UNDISTURBED SOIL OR ENGINEERED FILL OUTSIDE THE LIMIT OF LANDFILLED WASTE: 1%
5. IF NEITHER THE SPECIFIED GRADE, NOR THE APPLICABLE BASIC MINIMUM GRADE, CAN BE ACHIEVED FOR A SPECIFIC PIPE SECTION, CONTRACTOR SHALL SUBMIT AN ALTERNATIVE GRADE FOR OWNER/ENGINEER REVIEW AND APPROVAL.
6. ANY SURVEY CONTROL POINT OR ESTABLISHED MONUMENT THAT IS DISTURBED OR COMPROMISED DURING CONTRACTOR'S WORK SHALL BE REPLACED AT NO COST TO THE OWNER.
7. SEE SPECIFICATION SECTION 13430 FOR REMOTE MONITORING STATION DETAILS. THE 2 LFG MONITORING STATIONS ARE CONCEPTUAL ONLY, AND WILL BE REVISED BY THE AUTHORITY BEFORE INSTALLATION.

Rev.	YYYY-MM-DD	DESCRIPTION	PREPARED	DESIGN	REVIEW	APPROVED
0	2016-08-19	ISSUED FOR BIDDING	MAL	APW	APW	RVW

CLIENT
WESTERN PLACER WASTE MANAGEMENT AUTHORITY
3033 FIDDYMENT ROAD
ROSEVILLE, CA. 95747

CONSULTANT
GOLDER ASSOCIATES, INC.
425 LAKESIDE DRIVE
SUNNYVALE, CALIFORNIA 94085
USA
+[1] (408) 220-9223
www.golder.com

PROJECT
WESTERN REGIONAL SANITARY LANDFILL
2016 GCCS EXPANSION

TITLE
LFG COLLECTION SYSTEM PLAN-SOUTHERN AREA

PROJECT No. 1420152 | Rev. 0 | 3 of 58 | DRAWING 2

IF THIS MEASUREMENT DOES NOT MATCH WHAT IS SHOWN, THE SHEET SIZE HAS BEEN MODIFIED FROM: ANSI D

0 1 in

Path: \\sacramento\acad\Sites\Western Regional LF\CIVIL 3D\1420152_GCCS Expansion\Concept 2 (IFB Rev0)\ | File Name: 1420152-01_GCCS_SITE PLAN.dwg

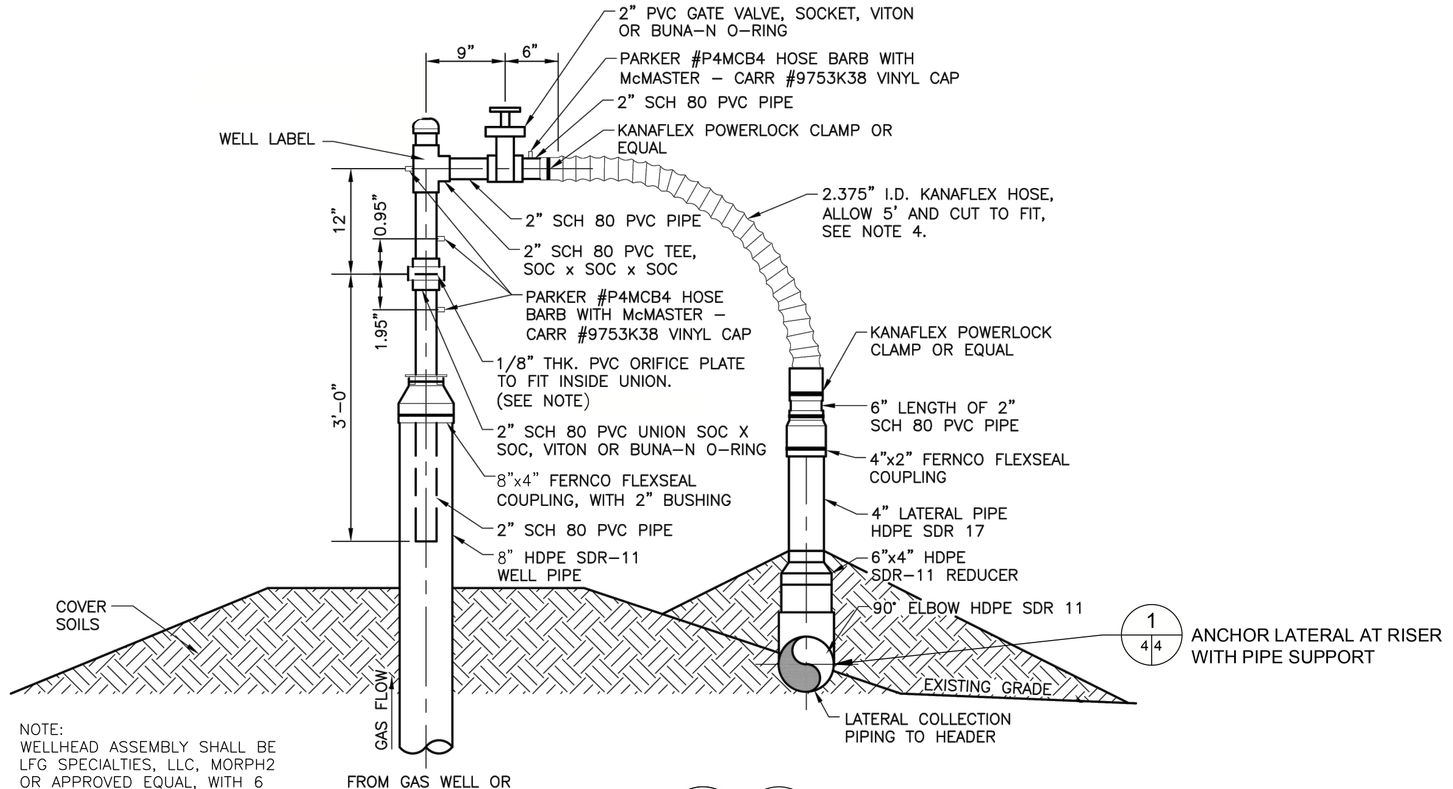

NOTE:
WELLHEAD ASSEMBLY SHALL BE LFG SPECIALTIES, LLC, MORPH2 OR APPROVED EQUAL, WITH 6 PVC ORIFICE PLATES, 0.4" TO 1.4". OWNER TO SPECIFY INITIAL ORIFICE SIZE.

SCALE: N.T.S. 1 1|3 1 2|3 LFG WELLHEAD DETAIL

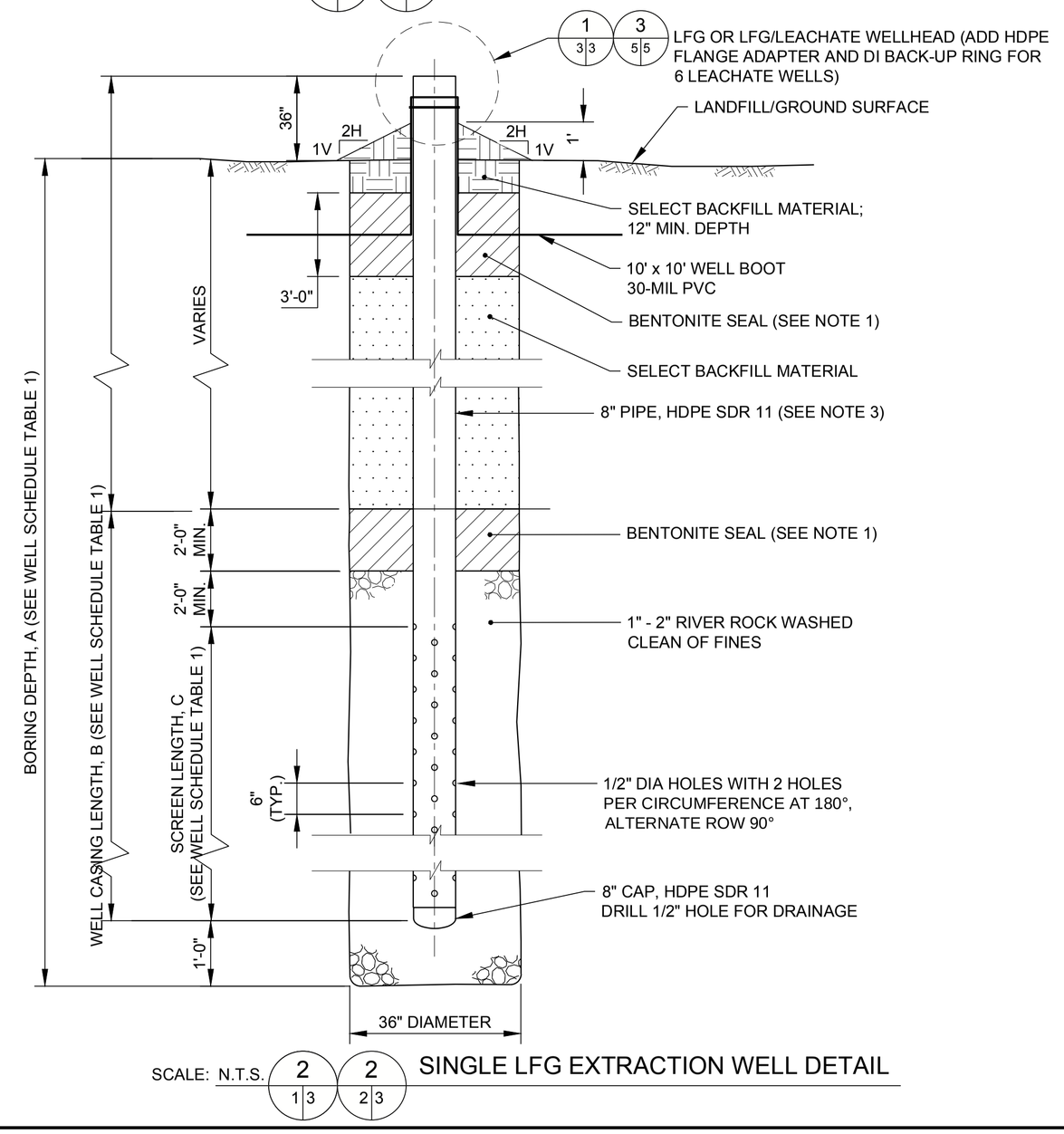

SCALE: N.T.S. 2 1|3 2 2|3 SINGLE LFG EXTRACTION WELL DETAIL

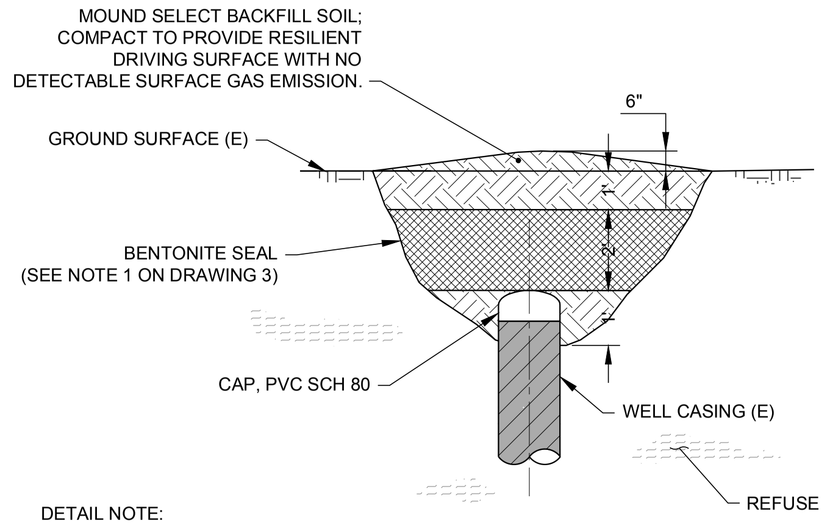

DETAIL NOTE:
CONTRACTOR SHALL FUSE HDPE CAP TO SEAL DECOMMISSIONED LATERAL AT EACH DECOMMISSIONED WELL (IF NOT IMMEDIATELY CONNECTED TO NEW WELL).

SCALE: N.T.S. 3 1|3 3 2|3 WELL DECOMISSIONING DETAIL

THE PROJECT WAS ORIGINALLY DESIGNED AND BID AS A REPLACEMENT OF THE BLOWER/FLARE STATION THAT INCLUDED REUSING SEVERAL COMPONENTS OF THE EXISTING FACILITIES AND 240 VAC MAIN POWER SUPPLY. THE CURRENT PROJECT, BIDDING PROCESS AND BID FORM IS BASED ON UPGRADING THE FACILITY TO USE 480 VAC POWER, REUSING VERY FEW AND SELECTED FACILITIES, AND USING A REVISED LAYOUT SHOWN ON SHEET 7A. ANY REFERENCES TO NEW 240 VAC EQUIPMENT IN THE PLANS OR SPECIFICATIONS ARE INTENDED TO BE 480 VAC.

NOTES

1. HYDRATED BENTONITE SEAL SHALL INCLUDE COARSE GRANULAR BENTONITE CHIPS (3/8" TO 3/4") AND FINE GRANULAR BENTONITE (8-MESH BAROID BENSEAL) PRE-MIXED AT RATIO 2:1 OR APPROVED EQUAL.

MINIMUM 60% BENTONITE TO MAXIMUM 40% WATER (BY VOLUME) AND POLYMER (CETCO INSTA-VIS PLUS OR APPROVED EQUAL) SHALL BE MIXED TO THICK SLURRY CONSISTENCY BEFORE PLACEMENT. DO NOT HYDRATE BENTONITE IN PLACE BY ADDING WATER DOWN THE BOREHOLE.

2. INSTALLED HDPE FITTINGS SHALL BE FULL PRESSURE RATED OR ONE SDR LOWER THAN HDPE PIPE SDR.
3. INSTALL ALL WELL CASINGS VERTICALLY PLUMB. USE SPRING CENTRALIZERS EVERY 20 FEET TO CENTER SINGLE WELL CASINGS IN THE BORE.
4. ALL LFG WELL LATERAL PIPES SHALL BE MINIMUM 6" DIAMETER, UNLESS NOTED OTHERWISE. CONTRACTOR SHALL PROVIDE ALL FITTINGS AND OTHER ACCESSORIES REQUIRED FOR PROPER CONNECTION OF ALL LATERALS TO WELLHEADS AND OTHER SYSTEM PIPING AS SHOWN ON THE PLAN DRAWINGS.

Rev.	YYYY-MM-DD	DESCRIPTION	PREPARED	DESIGN	REVIEW	APPROVED
0	2016-08-19	ISSUED FOR BIDDING	MAL	APW	APW	RVW

CLIENT
WESTERN PLACER WASTE MANAGEMENT AUTHORITY
3033 FIDDYMENT ROAD
ROSEVILLE, CA. 95747

CONSULTANT
GOLDER ASSOCIATES, INC.
425 LAKESIDE DRIVE
SUNNYVALE, CALIFORNIA 94085
USA
+[1] (408) 220-9223
www.golder.com

PROJECT
WESTERN REGIONAL SANITARY LANDFILL
2016 GCCS EXPANSION

TITLE
VERTICAL LFG EXTRACTION WELL DETAILS

PROJECT No. 1420152 | Rev. 0 | | DRAWING 3

Path: \\sacramento\acad\Sites\Western Regional LF\GVII_3D\1420152_GCCS Expansion\Concept 2 (IFB Rev0)\ | File Name: 1420152-00_GCCS_Piping Dets.dwg
0 1 in
IF THIS MEASUREMENT DOES NOT MATCH WHAT IS SHOWN, THE SHEET SIZE HAS BEEN MODIFIED FROM: ANSI D

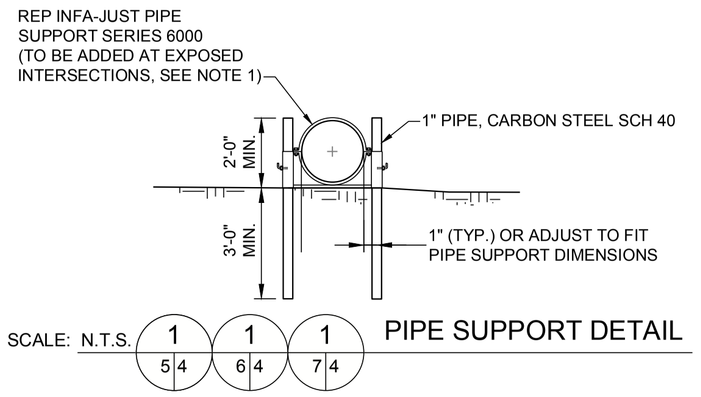

SCALE: N.T.S. 1 5|4 · 1 6|4 · 1 7|4 — PIPE SUPPORT DETAIL

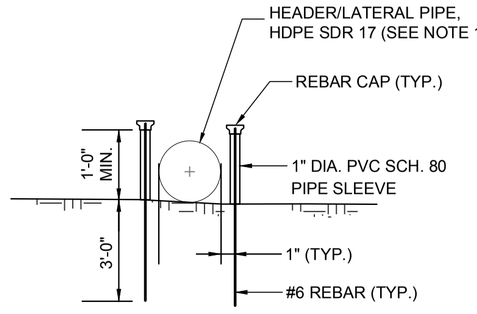

SCALE: N.T.S. 2 6|4 · 2 7|4 — PIPE GUIDE DETAIL

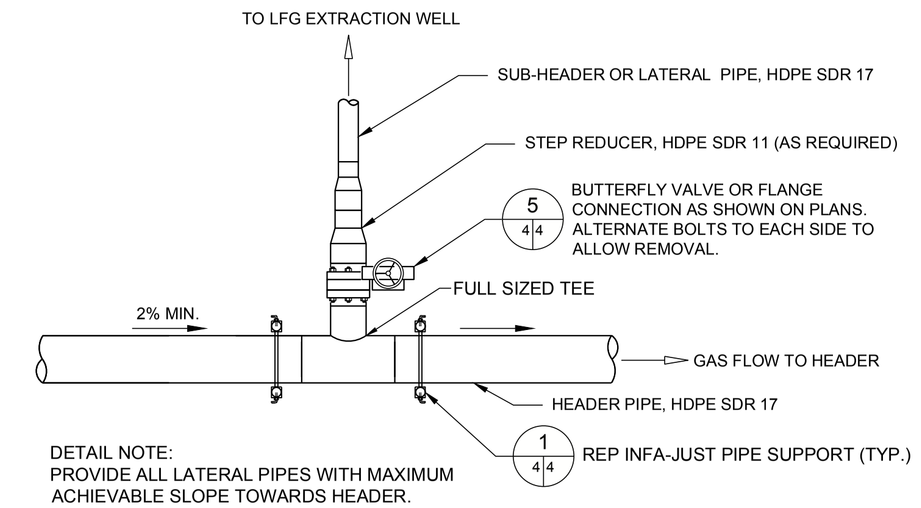

SCALE: N.T.S. 3 4|4 — TYPICAL SUB-HEADER/LATERAL TO ABOVE-GROUND HEADER CONNECTION DETAIL

NOTE(S)

1. CONTRACTOR TO SNAKE PIPE AND INSTALL PIPE GUIDES AT 20' SPACING ALONG ALL EXPOSED PIPE. CONTRACTOR TO INSTALL REP INFA-JUST PIPE ANCHORS AT WELLHEAD AND ON ALL PIPES >20' LONG AT EXPOSED PIPE JUNCTIONS. DO NOT INSTALL PIPE GUIDES, ANCHORS, SUPPORTS OR OTHER SURFACE PENETRATIONS IN FINAL COVER AREAS.
2. COORDINATE ALL TIE-INS TO EXISTING PIPING SYSTEMS WITH OWNER AND LFG SYSTEM OPERATOR TO MAINTAIN PERSONNEL SAFETY AND FACILITY REGULATORY COMPLIANCE, AND MINIMIZE OPERATIONAL DOWNTIME.
3. INSTALLED HDPE FITTINGS SHALL BE FULL PRESSURE RATED OR ONE SDR LOWER THAN HDPE PIPE SDR. NO SADDLE TEES ALLOWED FOR ABOVE GROUND HEADER/LATERAL CONNECTIONS. ELECTROFUSION SADDLE REDUCER TEE MAY BE PROPOSED FOR SUBSTITUTE TIE-IN TO EXISTING HEADER IF FULL SIZE TEE CANNOT BE INSTALLED. CONTRACTOR SHALL REQUEST PRIOR ENGINEER/OWNER APPROVAL FOR ALL PROPOSED ELECTROFUSION LOCATIONS.

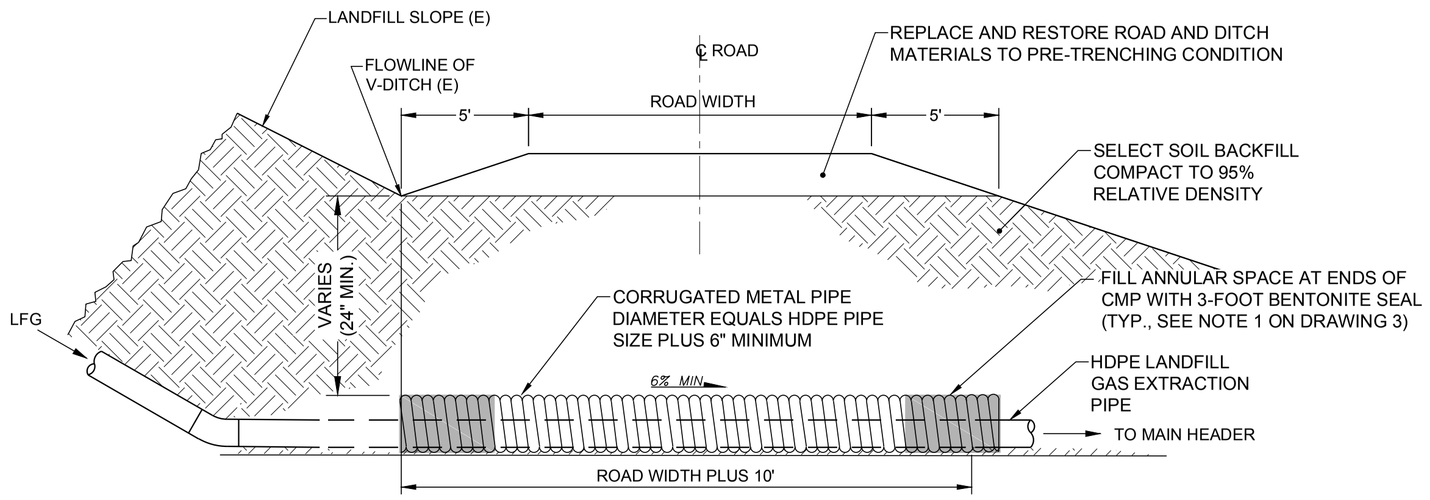

SCALE: N.T.S. 4 1|4 · 4 2|4 — ROAD CROSSING DETAIL

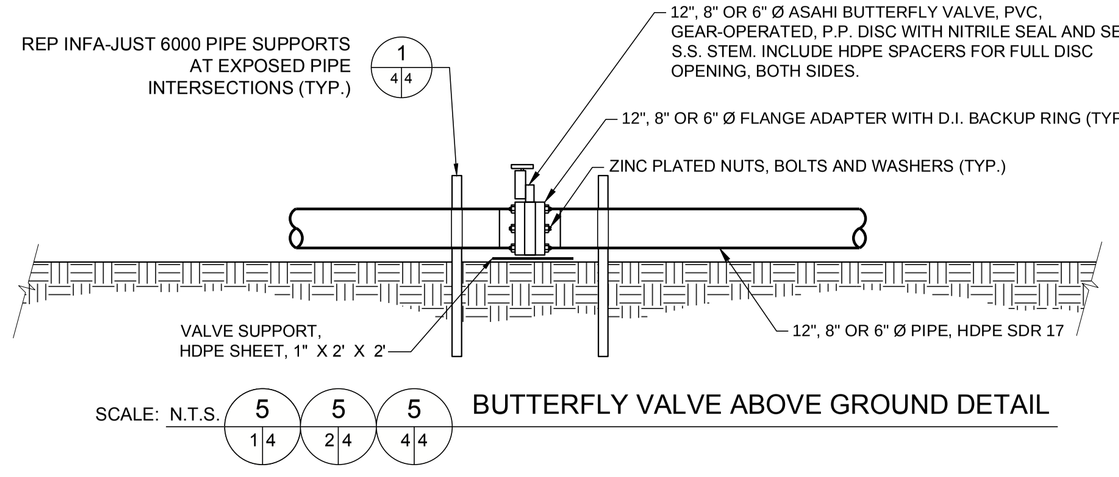

SCALE: N.T.S. 5 1|4 · 5 2|4 · 5 4|4 — BUTTERFLY VALVE ABOVE GROUND DETAIL

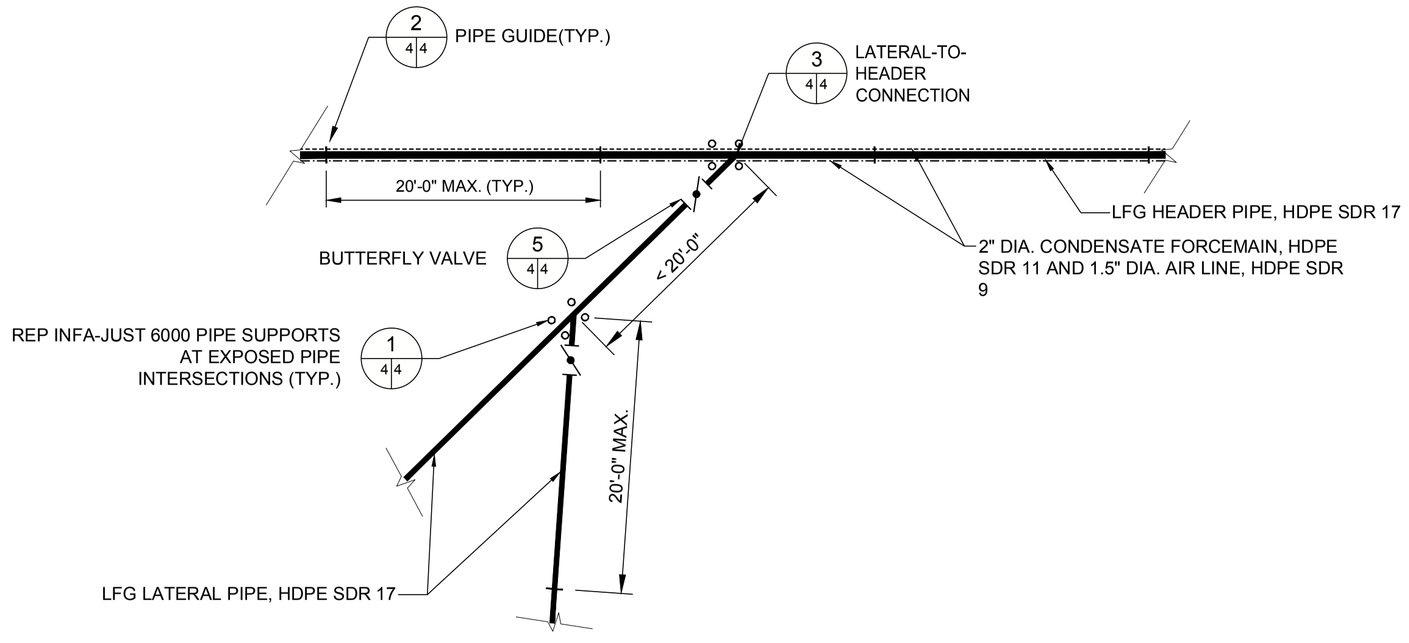

SCALE: N.T.S. 6 4|4 — HDPE PIPE GUIDE AND PIPE SUPPORT SPACING

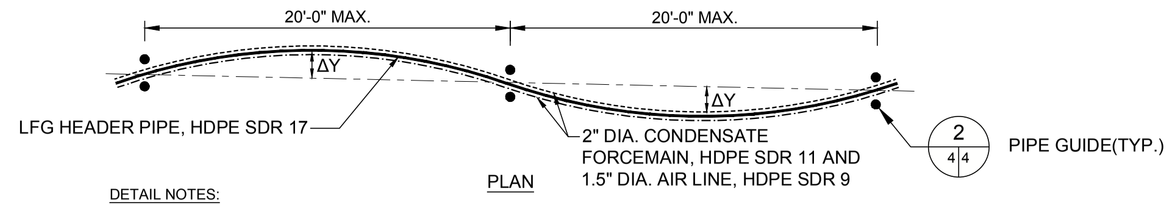

PLAN

DETAIL NOTES:

1. ΔY VARIES LINEARLY BETWEEN 0" TO 18" DEPENDING ON THE OUTSIDE TEMPERATURE (0" @ 60°F AND 18" @ 110°F).
2. DUE TO THERMAL EXPANSION AND CONTRACTION OF HDPE PIPE, LFG PIPE SHALL BE INSTALLED IN A SNAKED POSITION. CONTRACTOR SHALL MAKE ALLOWANCE FOR EXTRA LENGTH OF PIPE.
3. DO NOT INSTALL PIPE GUIDES, ANCHORS, SUPPORTS OR OTHER SURFACE PENETRATIONS IN FINAL COVER AREAS.

SCALE: N.T.S. 7 4|4 — HDPE PIPE SNAKING DETAIL

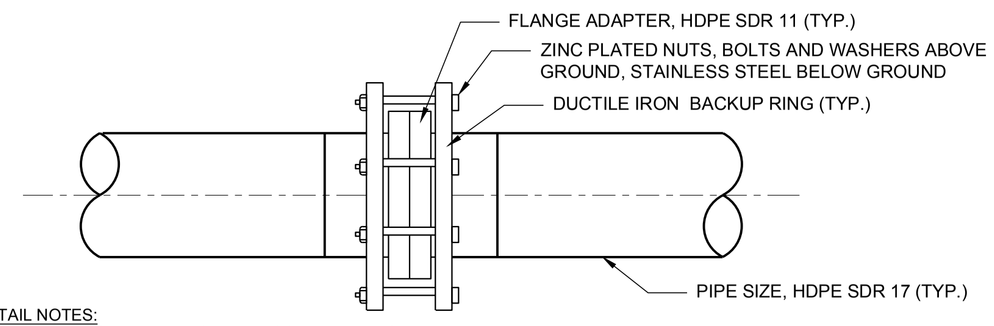

DETAIL NOTES:

1. COAT BOLT THREADS WITH BOSTIK NEVER-SEEZ.
2. TAPE 5 MIL PE AROUND ALL BURIED FLANGE CONNECTIONS.
3. BLIND FLANGE CONNECTION IS SIMILAR, WITH ONE SIDE AS DUCTILE IRON BLIND FLANGE.

SCALE: N.T.S. 8 4|4 — TYPICAL FLANGE CONNECTION

THE PROJECT WAS ORIGINALLY DESIGNED AND BID AS A REPLACEMENT OF THE BLOWER/FLARE STATION THAT INCLUDED REUSING SEVERAL COMPONENTS OF THE EXISTING FACILITIES AND 240 VAC MAIN POWER SUPPLY. THE CURRENT PROJECT, BIDDING PROCESS AND BID FORM IS BASED ON UPGRADING THE FACILITY TO USE 480 VAC POWER, REUSING VERY FEW AND SELECTED FACILITIES, AND USING A REVISED LAYOUT SHOWN ON SHEET 7A. ANY REFERENCES TO NEW 240 VAC EQUIPMENT IN THE PLANS OR SPECIFICATIONS ARE INTENDED TO BE 480 VAC.

Rev.	YYYY-MM-DD	DESCRIPTION	PREPARED	DESIGN	REVIEW	APPROVED
0	2016-08-19	ISSUED FOR BIDDING	MAL	APW	APW	RVW

CLIENT
WESTERN PLACER WASTE MANAGEMENT AUTHORITY
3033 FIDDYMENT ROAD
ROSEVILLE, CA. 95747

CONSULTANT
GOLDER ASSOCIATES, INC.
425 LAKESIDE DRIVE
SUNNYVALE, CALIFORNIA 94085
USA
+[1] (408) 220-9223
www.golder.com

PROJECT
WESTERN REGIONAL SANITARY LANDFILL
2016 GCCS EXPANSION

TITLE
LFG PIPING DETAILS

PROJECT No. 1420152 | Rev. 0 | | DRAWING 4

IF THIS MEASUREMENT DOES NOT MATCH WHAT IS SHOWN, THE SHEET SIZE HAS BEEN MODIFIED FROM: ANSI D

0 1 in

Path: \\sacramento\acad\Sites\Western Regional LF\CIVIL 3D\1420152_GCCS Expansion\Concept 2 (IFB Rev0)\ | File Name: 1420152-00_GCCS_Piping Dets.dwg

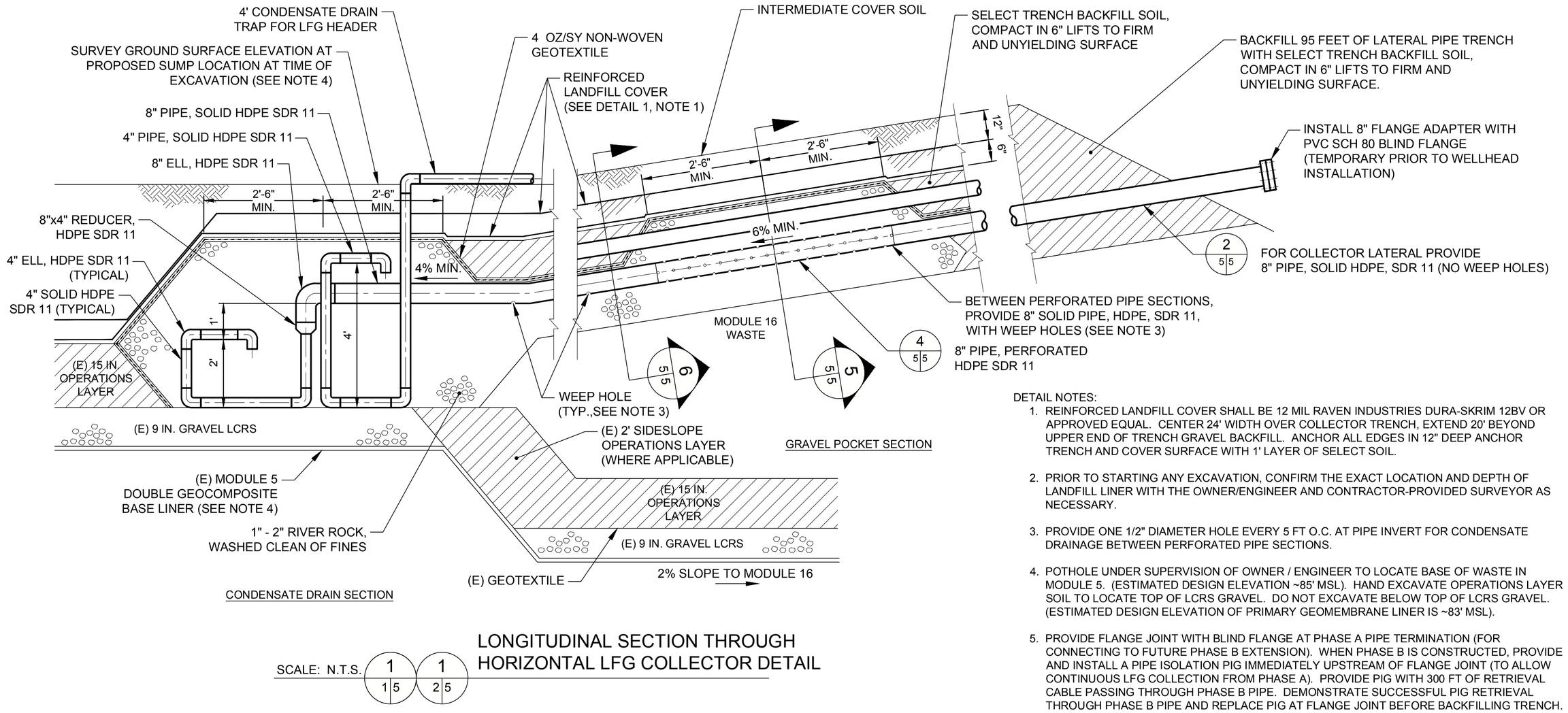

LONGITUDINAL SECTION THROUGH HORIZONTAL LFG COLLECTOR DETAIL

SCALE: N.T.S. 1 | 1 5 | 2 5

DETAIL NOTES:

1. REINFORCED LANDFILL COVER SHALL BE 12 MIL RAVEN INDUSTRIES DURA-SKRIM 12BV OR APPROVED EQUAL. CENTER 24' WIDTH OVER COLLECTOR TRENCH, EXTEND 20' BEYOND UPPER END OF TRENCH GRAVEL BACKFILL. ANCHOR ALL EDGES IN 12" DEEP ANCHOR TRENCH AND COVER SURFACE WITH 1' LAYER OF SELECT SOIL.
2. PRIOR TO STARTING ANY EXCAVATION, CONFIRM THE EXACT LOCATION AND DEPTH OF LANDFILL LINER WITH THE OWNER/ENGINEER AND CONTRACTOR-PROVIDED SURVEYOR AS NECESSARY.
3. PROVIDE ONE 1/2" DIAMETER HOLE EVERY 5 FT O.C. AT PIPE INVERT FOR CONDENSATE DRAINAGE BETWEEN PERFORATED PIPE SECTIONS.
4. POTHOLE UNDER SUPERVISION OF OWNER / ENGINEER TO LOCATE BASE OF WASTE IN MODULE 5. (ESTIMATED DESIGN ELEVATION ~85' MSL). HAND EXCAVATE OPERATIONS LAYER SOIL TO LOCATE TOP OF LCRS GRAVEL. DO NOT EXCAVATE BELOW TOP OF LCRS GRAVEL. (ESTIMATED DESIGN ELEVATION OF PRIMARY GEOMEMBRANE LINER IS ~83' MSL).
5. PROVIDE FLANGE JOINT WITH BLIND FLANGE AT PHASE A PIPE TERMINATION (FOR CONNECTING TO FUTURE PHASE B EXTENSION). WHEN PHASE B IS CONSTRUCTED, PROVIDE AND INSTALL A PIPE ISOLATION PIG IMMEDIATELY UPSTREAM OF FLANGE JOINT (TO ALLOW CONTINUOUS LFG COLLECTION FROM PHASE A). PROVIDE PIG WITH 300 FT OF RETRIEVAL CABLE PASSING THROUGH PHASE B PIPE. DEMONSTRATE SUCCESSFUL PIG RETRIEVAL THROUGH PHASE B PIPE AND REPLACE PIG AT FLANGE JOINT BEFORE BACKFILLING TRENCH.

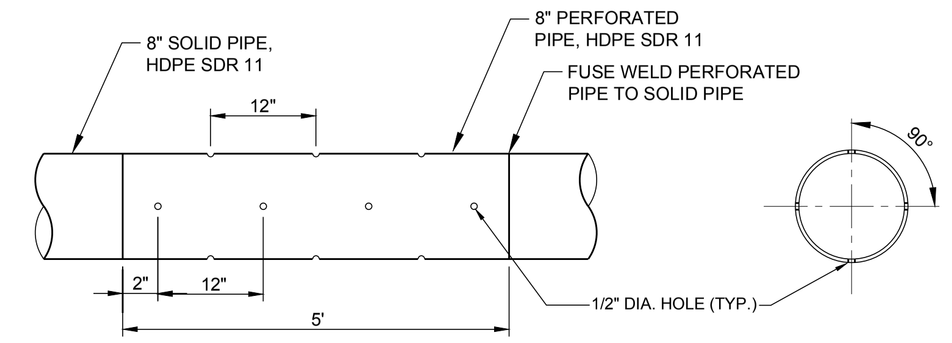

PERFORATED HORIZONTAL LFG COLLECTOR PIPING DETAIL

SCALE: N.T.S. 4 | 5 5

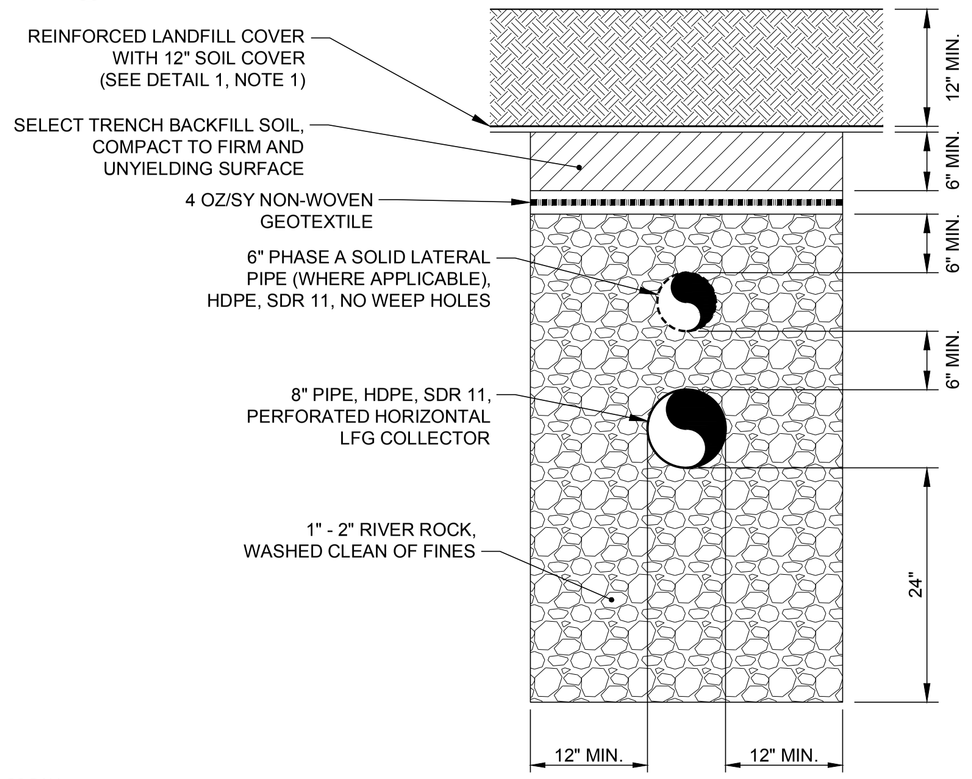

HORIZONTAL GAS COLLECTOR AT GRAVEL POCKET SECTION

SCALE: N.T.S. 5 | 5 5

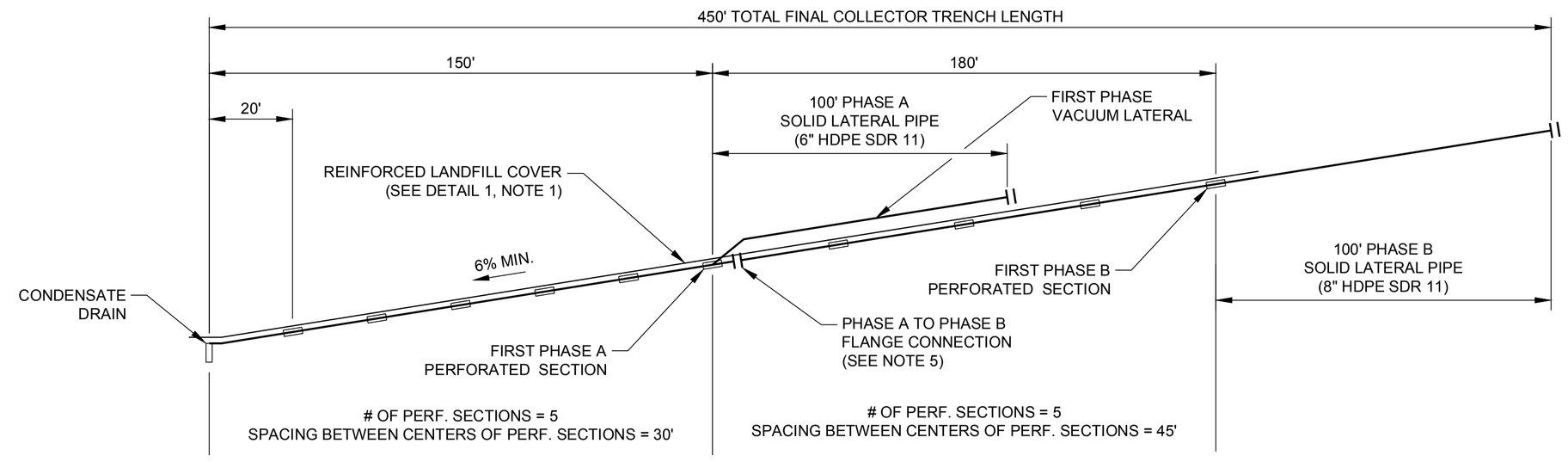

HORIZONTAL LFG COLLECTOR PERFORATION SPACING SCHEMATIC

SCALE: N.T.S. 2 | 5 5

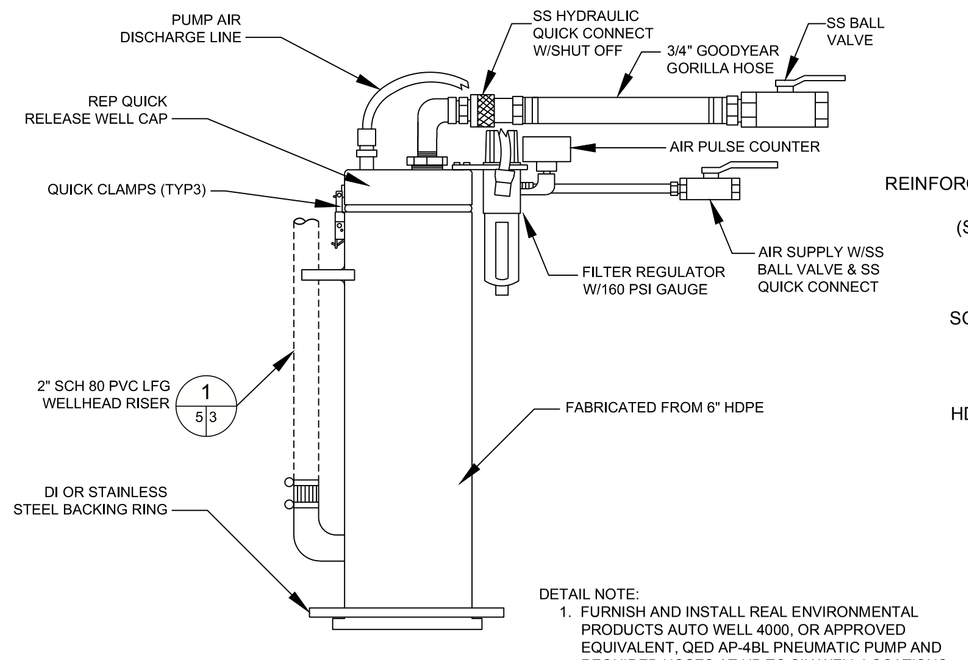

DETAIL NOTE:

1. FURNISH AND INSTALL REAL ENVIRONMENTAL PRODUCTS AUTO WELL 4000, OR APPROVED EQUIVALENT, QED AP-4BL PNEUMATIC PUMP AND REQUIRED HOSES AT UP TO SIX WELL LOCATIONS TO BE DETERMINED BY OWNER/ ENGINEER.

LFG/ LEACHATE WELLHEAD DETAIL

SCALE: N.T.S. 3 | 3 2 5 | 3 4 5

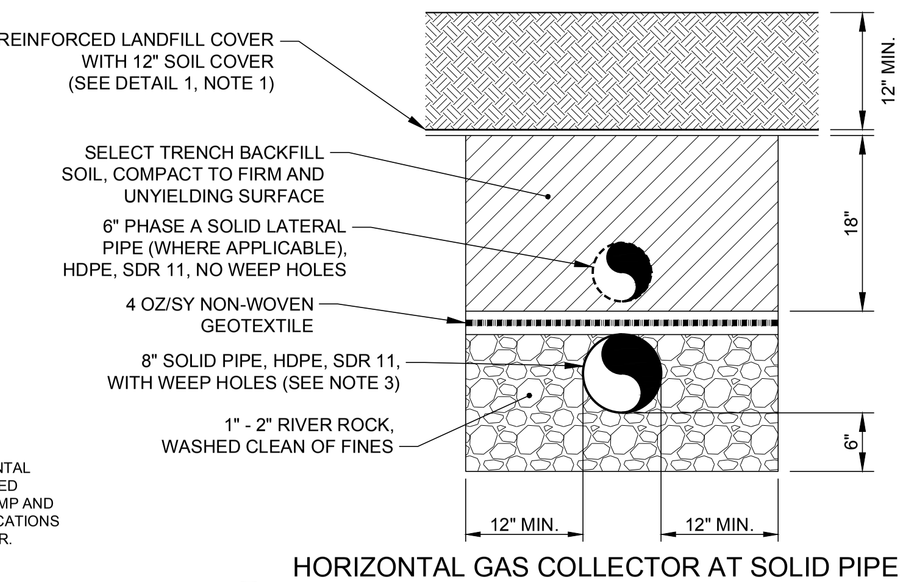

HORIZONTAL GAS COLLECTOR AT SOLID PIPE SECTION BETWEEN GRAVEL POCKETS

SCALE: N.T.S. 6 | 5 5

THE PROJECT WAS ORIGINALLY DESIGNED AND BID AS A REPLACEMENT OF THE BLOWER/FLARE STATION THAT INCLUDED REUSING SEVERAL COMPONENTS OF THE EXISTING FACILITIES AND 240 VAC MAIN POWER SUPPLY. THE CURRENT PROJECT, BIDDING PROCESS AND BID FORM IS BASED ON UPGRADING THE FACILITY TO USE 480 VAC POWER, REUSING VERY FEW AND SELECTED FACILITIES, AND USING A REVISED LAYOUT SHOWN ON SHEET 7A. ANY REFERENCES TO NEW 240 VAC EQUIPMENT IN THE PLANS OR SPECIFICATIONS ARE INTENDED TO BE 480 VAC.

Rev.	YYYY-MM-DD	DESCRIPTION	PREPARED	DESIGN	REVIEW	APPROVED
0	2016-08-19	ISSUED FOR BIDDING	MAL	APW	APW	RVW

CLIENT
WESTERN PLACER WASTE MANAGEMENT AUTHORITY
3033 FIDDYMENT ROAD
ROSEVILLE, CA. 95747

CONSULTANT
GOLDER ASSOCIATES, INC.
425 LAKESIDE DRIVE
SUNNYVALE, CALIFORNIA 94085
USA
+[1] (408) 220-9223
www.golder.com

PROJECT
WESTERN REGIONAL SANITARY LANDFILL
2016 GCCS EXPANSION

TITLE
HORIZONTAL LFG COLLECTION DETAILS

PROJECT No. 1420152 | Rev. 0 | 6 of 58 | DRAWING 5

IF THIS MEASUREMENT DOES NOT MATCH WHAT IS SHOWN, THE SHEET SIZE HAS BEEN MODIFIED FROM: ANSI D

0 1 in

Path: \\sacramento\acad\Sites\Western Regional LF\CIVIL 3D\1420152_GCCS Expansion\Concept 2 (IFB Rev0)\ | File Name: 1420152-00_GCCS_Piping Dets.dwg

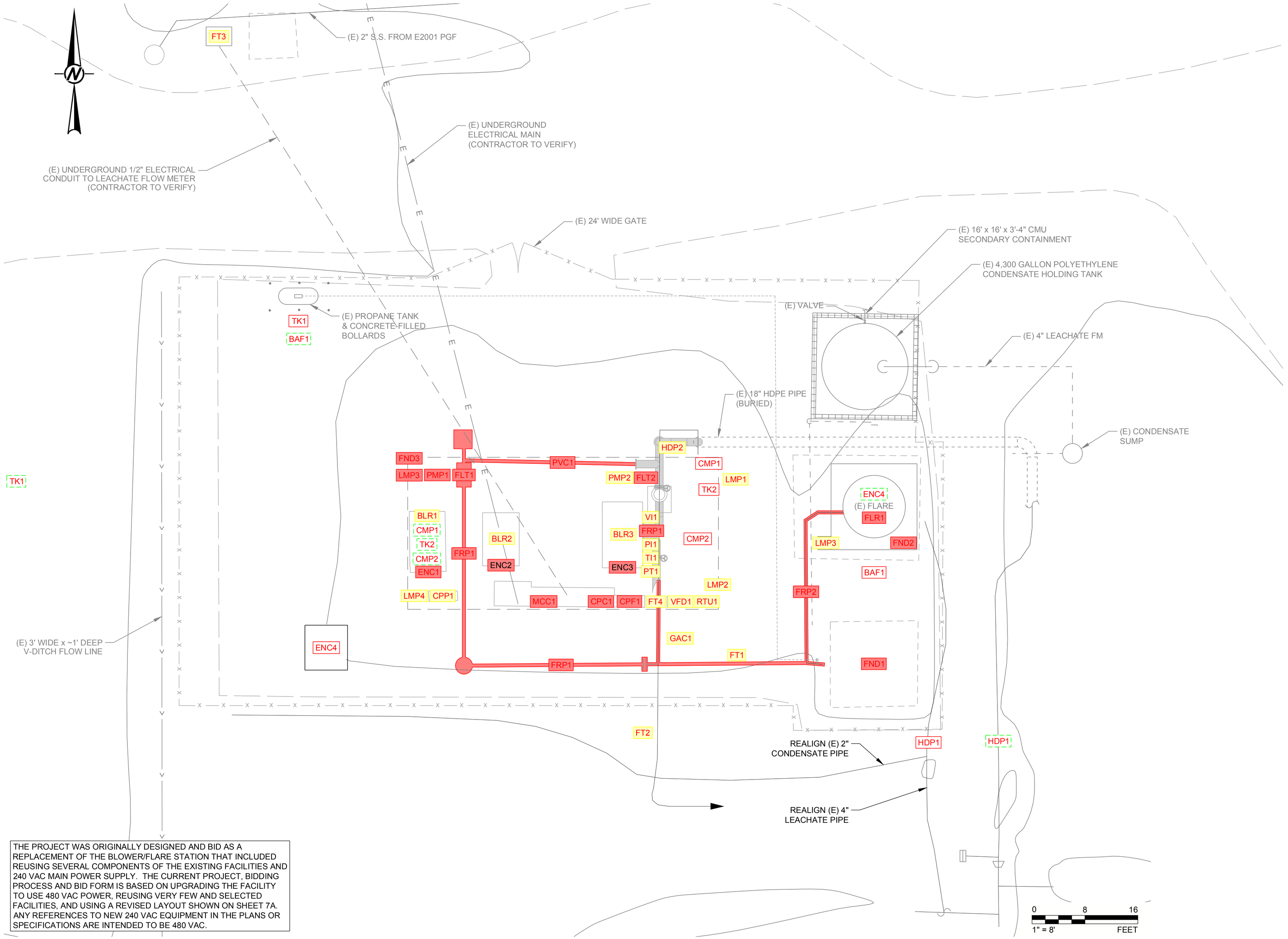

THE PROJECT WAS ORIGINALLY DESIGNED AND BID AS A REPLACEMENT OF THE BLOWER/FLARE STATION THAT INCLUDED REUSING SEVERAL COMPONENTS OF THE EXISTING FACILITIES AND 240 VAC MAIN POWER SUPPLY. THE CURRENT PROJECT, BIDDING PROCESS AND BID FORM IS BASED ON UPGRADING THE FACILITY TO USE 480 VAC POWER, REUSING VERY FEW AND SELECTED FACILITIES, AND USING A REVISED LAYOUT SHOWN ON SHEET 7A. ANY REFERENCES TO NEW 240 VAC EQUIPMENT IN THE PLANS OR SPECIFICATIONS ARE INTENDED TO BE 480 VAC.

LEGEND

- RETAIN IN-PLACE
- RE-LOCATE
- REMOVE AND PROVIDE TO OWNER
- REMOVE AND DISPOSE/ RECYCLE
- RELOCATION SITE

PROPOSED PROJECT DISPOSITION FOR SELECTED BLOWER FLARE STATION EQUIPMENT AND ITEMS

ITEM NO.	SIZE	DESCRIPTION	MEDIA	DISPOSITION WORK	FINAL LOCATION/ CONDITION
BAF1	4' SQ	Flare Air Inlet Baffle	n.a.	Relocate	East side air inlet of new flare
BLR1	25 HP	Perimeter blower #1	LFG	Remove and provide to Owner	
BLR2	25 HP	Perimeter blower #2	LFG	Remove and provide to Owner	
BLR3	75 HP	Infill blower #3	LFG	Remove and provide to Owner	
CMP1	15 HP	Air compressor #1	Air	Relocate	East side of new canopy area
CMP2	15 HP	Air compressor #2	Air	Relocate	East side of new canopy area
CPC1	n.a.	Condensate control panel	Elec.	Remove and dispose / recycle	
CPF1	n.a.	Flare control panel	Elec.	Remove and dispose / recycle	
CPP1	n.a.	Perimeter instrument control panel	Elec.	Remove and provide to Owner	
ENC1	n.a.	Blower #1 enclosure	n.a.	Remove and provide to Owner	
ENC2	n.a.	Blower #2 enclosure	n.a.	Remove and provide to Owner	
ENC3	n.a.	Blower #3 enclosure	n.a.	Remove and provide to Owner	
ENC4	n.a.	Tuff-Shed storage	n.a.	Relocate	South of condensate tank (door facing west)
FLR1	2,500 cfm	Enclosed flare	LFG	Remove and provide to Owner	Cut into 10' tall sections
FLT1	2,500 cfm	Perimeter entrainment filter	LFG	Remove and dispose / recycle	
FLT2	2,500 cfm	Infill entrainment filter	LFG	Remove and dispose / recycle	
FND1	13' x 13'	Flare foundation (south)	LFG	Remove and dispose / recycle	Backfill, regrade and re-pave
FND2	13' x 13'	Flare foundation (north)	LFG	Remove and dispose / recycle	Backfill, regrade and re-pave
FND3	23' x 50'	LFG equipment slab-on-grade	LFG	Remove and dispose / recycle	Backfill, regrade and re-pave
FRP1	12"	Pipe, perimeter, fiberglass reinforced	LFG	Remove and dispose / recycle	
FRP2	12"	Pipe, infill, fiberglass reinforced	LFG	Remove and dispose / recycle	
FT1	12"	Flare flow meter / transmitter	LFG	Remove and provide to Owner	
FT2	12"	PGF flow meter / transmitter	LFG	Remove and provide to Owner	
FT3	n.a.	Wastewater discharge flow meter	Leachate	Remove and provide to Owner	
FT4	12"	GCCS flow meter / transmitter	LFG	Remove and provide to Owner	
GAC1	n.a.	Gas analyzer	LFG	Remove and provide to Owner	
HDP1	4"	Pipe, HDPE	Cond.	Relocate	Align with BFS LFG infill headers
HDP2	12"	Pipe, infill, HDPE	LFG	Remove and provide to Owner	
LMP1	12'	Yard light	n.a.	Remove and provide to Owner	
LMP2	12'	Yard light	n.a.	Remove and provide to Owner	
LMP3	12'	Yard light	n.a.	Remove and provide to Owner	
LMP4	12'	Yard light	n.a.	Remove and provide to Owner	
LMP5	12'	Yard light	n.a.	Remove and provide to Owner	
MCC1	n.a.	Motor control center	Elec.	Remove and dispose / recycle	
PI1	n.a.	Pressure gauge	LFG	Remove and provide to Owner	
PMP1	n.a.	Perimeter filter pump, electric	Cond.	Remove and dispose / recycle	
PMP2	n.a.	Infill filter pump, diaphragm	Cond.	Remove and provide to Owner	
PT1	n.a.	Pressure sensor / transmitter	LFG	Remove and provide to Owner	
PVC1	12"	Pipe, crossover, polyvinyl chloride	LFG	Remove and dispose / recycle	
RTU1	n.a.	SCADA PLC panel	Elec.	Remove and provide to Owner	
TI1	n.a.	Temperature gauge	LFG	Remove and provide to Owner	
TK1	500 gal	Propane tank	Propane	Relocate	South of new electrical service
TK2	120 gal	Compressed air receiver	Air	Relocate	East side of new canopy area
VFD1	n.a.	Infill blower #3 variable drive	Elec.	Remove and provide to Owner	
VI1	n.a.	Vacuum gauge	LFG	Remove and provide to Owner	

NOTE(S)

1. BASE PLANS ARE FROM "BLOWER FLARE STATION LFG PIPING MODIFICATION PLAN", 6-18-09, GOLDER ASSOCIATES; AND "FLARE MODIFICATIONS", 5-09-05, SCS ENGINEERS (ORIGINAL CONDITIONS IN LAWRENCE AND ASSOCIATES, "GAS-EXTRACTION SYSTEM AS-BUILT PLANS", 1996).
2. P&ID 'TAGS' ARE ONLY USED FOR GENERAL ITEM IDENTIFICATION (AS REFERENCED IN THE TABLE ON DRAWING 11)
3. EQUIPMENT TYPE, LOCATIONS AND DIMENSIONS ARE BASED ON AVAILABLE INFORMATION PROVIDED TO THE ENGINEER. CONTRACTOR SHALL FIELD-VERIFY ALL APPLICABLE DATA AND DIMENSIONS BEFORE STARTING WORK.
4. THE ORDERS OF THE WORK ITEMS IN THESE TABLES OR DRAWINGS DO NOT IMPLY PRIORITY OR CHRONOLOGY. THE CONTRACTOR IS RESPONSIBLE FOR ASSESSING, EXECUTING AND COMPLETING THE SEQUENCE OF WORK SAFELY, EFFICIENTLY, AND IN COMPLIANCE WITH ALL REGULATORY AND OWNER REQUIREMENTS.
5. CONTRACTOR SHALL REMOVE, MODIFY OR RESTORE ALL EXISTING ITEMS REQUIRED FOR COMPLETION AND PROPER FUNCTIONING OF THE NEW EQUIPMENT IN ACCORDANCE WITH THE PLANS AND SPECIFICATIONS.
6. DISPOSITION OF MINOR INDIVIDUAL ITEMS (INCLUDING APPURTENANT CONDUIT, WIRING, VALVES AND FITTINGS) MAY NOT BE SPECIFICALLY LISTED OR SHOWN ON DRAWINGS. THE CONTRACTOR IS RESPONSIBLE FOR SAFE AND PROPER REMOVAL AND DISPOSITION OF ALL ITEMS NO LONGER REQUIRED AT THE COMPLETION OF THE PROJECT.
7. COORDINATE WITH THE OWNER WHO WILL FIELD MARK ALL ITEMS (BOTH LISTED ITEMS AND UNLISTED OR MINOR ITEMS) REQUIRED TO BE PROVIDED TO THE WPWMA UPON REMOVAL.
8. THE CONTRACTOR SHALL COORDINATE ALL SYSTEM INTERRUPTIONS WITH THE OWNER AND THE PGF, AND COMPLY WITH SYSTEM DOWNTIME RESTRICTIONS IN THE SPECIFICATIONS. THE CONTRACTOR SHALL IMPLEMENT ALL NECESSARY PROCEDURES FOR SAFE AND COMPLIANT SHUT-DOWN, MODIFICATION, AND START-UP, INCLUDING EQUIPMENT LOCK-OUT / TAG-OUT AND PIPING BLOCK / BLEED.

Rev.	YYYY-MM-DD	DESCRIPTION	PREPARED	DESIGN	REVIEW	APPROVED
0	2016-08-19	ISSUED FOR BIDDING	MAL	APW	APW	RVW

CLIENT
WESTERN PLACER WASTE MANAGEMENT AUTHORITY
3033 FIDDYMENT ROAD
ROSEVILLE, CA. 95747

CONSULTANT
GOLDER ASSOCIATES, INC.
425 LAKESIDE DRIVE
SUNNYVALE, CALIFORNIA 94085
USA
+[1] (408) 220-9223
www.golder.com

PROJECT
WESTERN REGIONAL SANITARY LANDFILL
2016 GCCS EXPANSION

TITLE
BLOWER/FLARE STATION EXISTING CONDITIONS/ DECOMMISSION PLAN

PROJECT No. 1420152 | Rev. 0 | 8 of 58 | DRAWING 6A

IF THIS MEASUREMENT DOES NOT MATCH WHAT IS SHOWN, THE SHEET SIZE HAS BEEN MODIFIED FROM: ANSI D

0 1 in

Path: \\sacramento\acad\Sites\Western Regional LF\CIVIL 3D\1420152_GCCS Expansion\Concept 2 (IFB Rev0)\ | File Name: 1418421_Final Equipment Layout Plan [Rev0].dwg

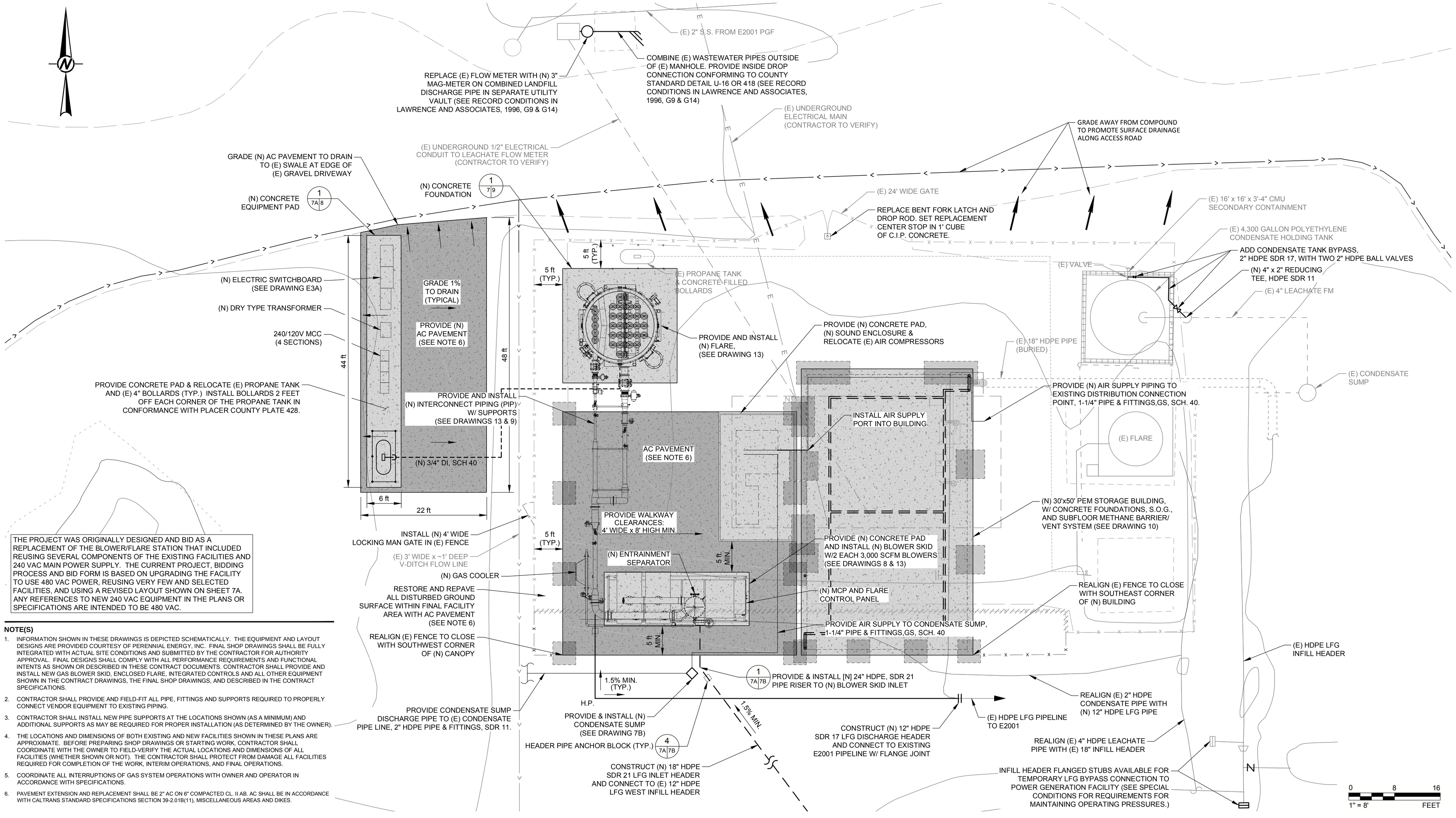

THE PROJECT WAS ORIGINALLY DESIGNED AND BID AS A REPLACEMENT OF THE BLOWER/FLARE STATION THAT INCLUDED REUSING SEVERAL COMPONENTS OF THE EXISTING FACILITIES AND 240 VAC MAIN POWER SUPPLY. THE CURRENT PROJECT, BIDDING PROCESS AND BID FORM IS BASED ON UPGRADING THE FACILITY TO USE 480 VAC POWER, REUSING VERY FEW AND SELECTED FACILITIES, AND USING A REVISED LAYOUT SHOWN ON SHEET 7A. ANY REFERENCES TO NEW 240 VAC EQUIPMENT IN THE PLANS OR SPECIFICATIONS ARE INTENDED TO BE 480 VAC.

NOTE(S)

1. INFORMATION SHOWN IN THESE DRAWINGS IS DEPICTED SCHEMATICALLY. THE EQUIPMENT AND LAYOUT DESIGNS ARE PROVIDED COURTESY OF PERENNIAL ENERGY, INC. FINAL SHOP DRAWINGS SHALL BE FULLY INTEGRATED WITH ACTUAL SITE CONDITIONS AND SUBMITTED BY THE CONTRACTOR FOR AUTHORITY APPROVAL. FINAL DESIGNS SHALL COMPLY WITH ALL PERFORMANCE REQUIREMENTS AND FUNCTIONAL INTENTS AS SHOWN OR DESCRIBED IN THESE CONTRACT DOCUMENTS. CONTRACTOR SHALL PROVIDE AND INSTALL NEW GAS BLOWER SKID, ENCLOSED FLARE, INTEGRATED CONTROLS AND ALL OTHER EQUIPMENT SHOWN IN THE CONTRACT DRAWINGS, THE FINAL SHOP DRAWINGS, AND DESCRIBED IN THE CONTRACT SPECIFICATIONS.
2. CONTRACTOR SHALL PROVIDE AND FIELD-FIT ALL PIPE, FITTINGS AND SUPPORTS REQUIRED TO PROPERLY CONNECT VENDOR EQUIPMENT TO EXISTING PIPING.
3. CONTRACTOR SHALL INSTALL NEW PIPE SUPPORTS AT THE LOCATIONS SHOWN (AS A MINIMUM) AND ADDITIONAL SUPPORTS AS MAY BE REQUIRED FOR PROPER INSTALLATION (AS DETERMINED BY THE OWNER).
4. THE LOCATIONS AND DIMENSIONS OF BOTH EXISTING AND NEW FACILITIES SHOWN IN THESE PLANS ARE APPROXIMATE. BEFORE PREPARING SHOP DRAWINGS OR STARTING WORK, CONTRACTOR SHALL COORDINATE WITH THE OWNER TO FIELD-VERIFY THE ACTUAL LOCATIONS AND DIMENSIONS OF ALL FACILITIES (WHETHER SHOWN O/R NOT). THE CONTRACTOR SHALL PROTECT FROM DAMAGE ALL FACILITIES REQUIRED FOR COMPLETION OF THE WORK, INTERIM OPERATIONS, AND FINAL OPERATIONS.
5. COORDINATE ALL INTERRUPTIONS OF GAS SYSTEM OPERATIONS WITH OWNER AND OPERATOR IN ACCORDANCE WITH SPECIFICATIONS.
6. PAVEMENT EXTENSION AND REPLACEMENT SHALL BE 2" AC ON 6" COMPACTED CL. II AB. AC SHALL BE IN ACCORDANCE WITH CALTRANS STANDARD SPECIFICATIONS SECTION 39-2.01B(11), MISCELLANEOUS AREAS AND DIKES.

Rev.	YYYY-MM-DD	DESCRIPTION	PREPARED	DESIGN	REVIEW	APPROVED
0	2016-08-19	ISSUED FOR BIDDING	MAL	APW	APW	RVW

CLIENT
WESTERN PLACER WASTE MANAGEMENT AUTHORITY
3033 FIDDYMENT ROAD
ROSEVILLE, CA. 95747

CONSULTANT
GOLDER ASSOCIATES, INC.
425 LAKESIDE DRIVE
SUNNYVALE, CALIFORNIA 94085
USA
+[1] (408) 220-9223
www.golder.com

PROJECT
WESTERN REGIONAL SANITARY LANDFILL
2016 GCCS EXPANSION

TITLE
BLOWER/ FLARE
STATION CONCEPTUAL SITE PLAN

PROJECT No. 1420152 | Rev. 0 | 10 of 58 | DRAWING 7A

Path: \\sacramento\acad\Sites\Western Regional LF\CIVIL 3D\1420152_GCCS Expansion\Concept 2 (IFB Rev0)\ | File Name: 1418421_Final Equipment Layout Plan (Rev0).dwg
IF THIS MEASUREMENT DOES NOT MATCH WHAT IS SHOWN, THE SHEET SIZE HAS BEEN MODIFIED FROM: ANSI D
0 1 in

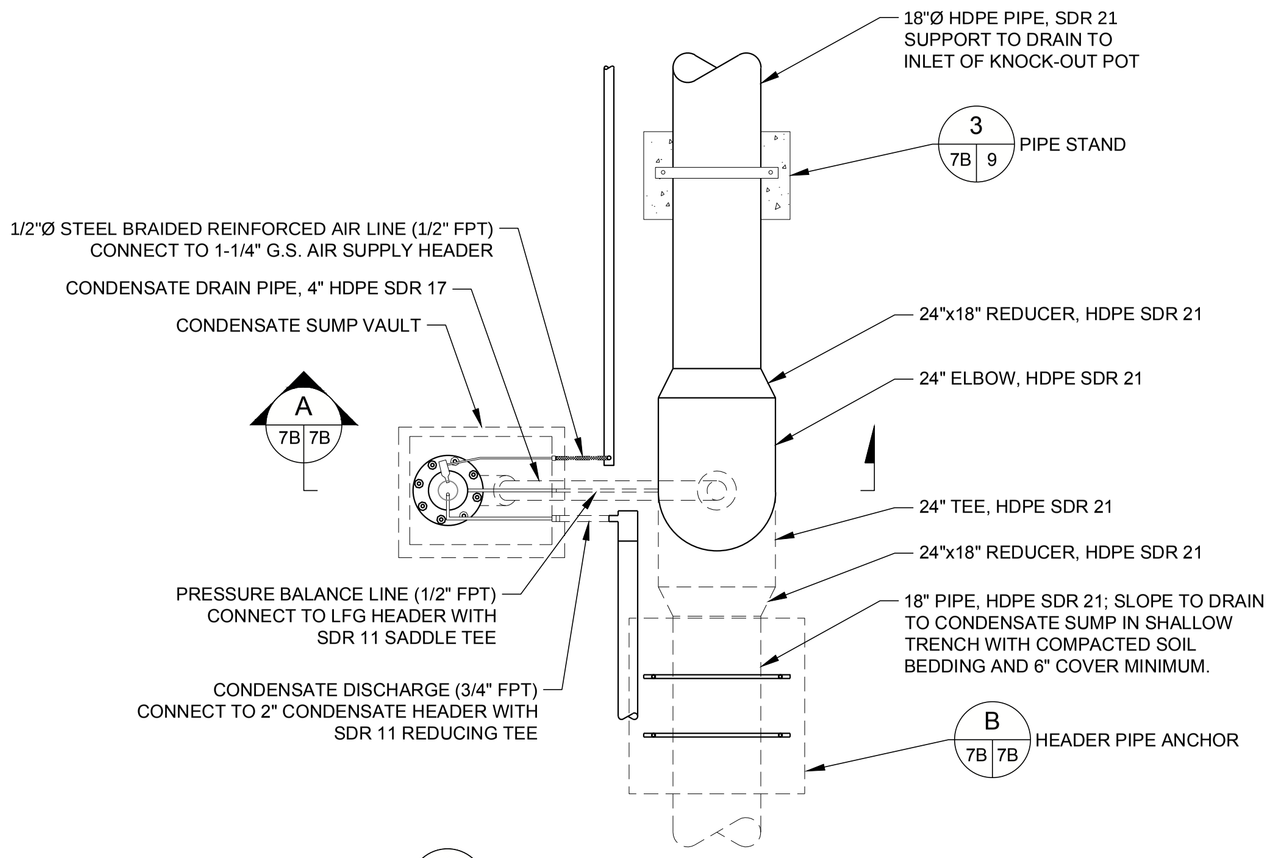

N.T.S. 1 (7A 7B) CONDENSATE SUMP INSTALLATION

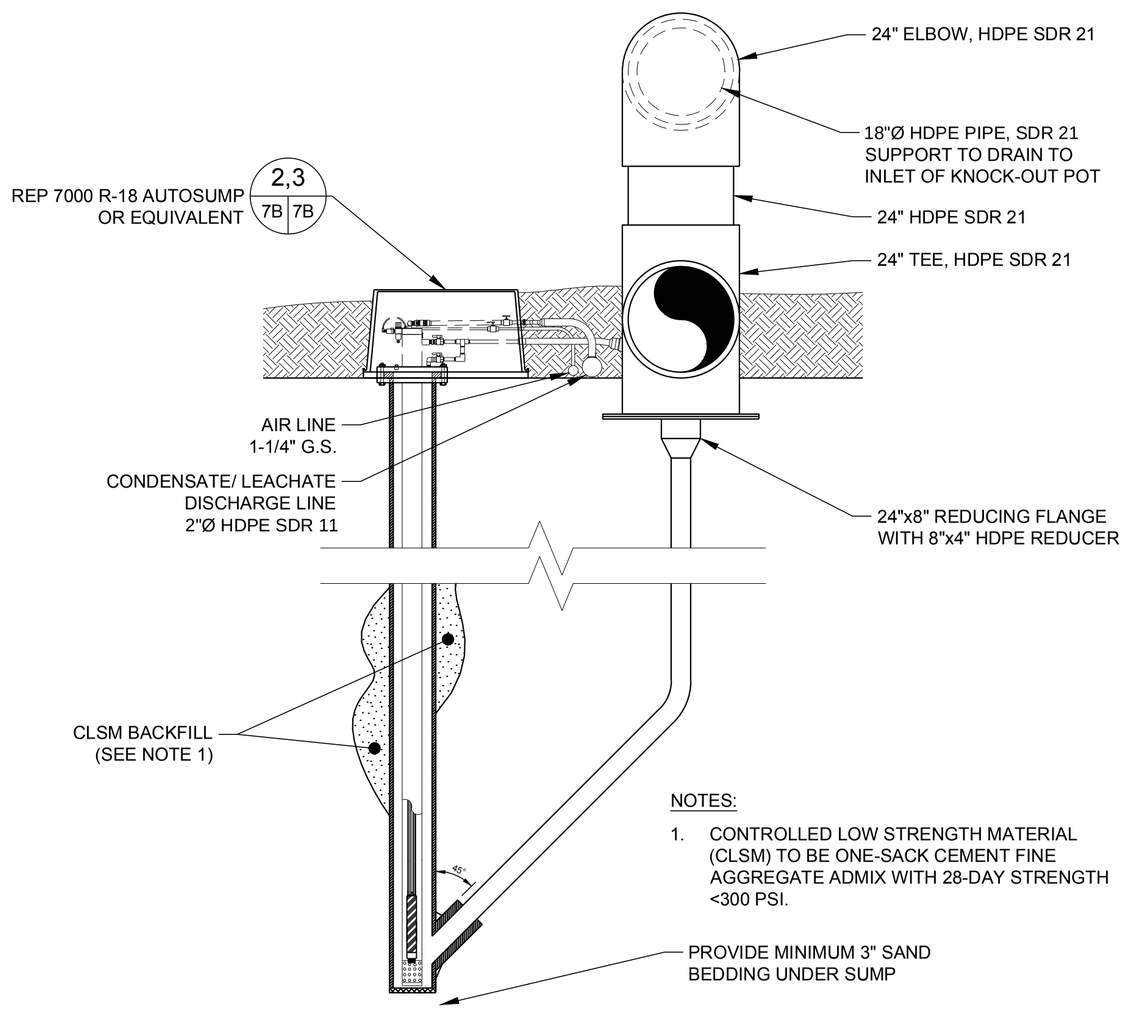

NOTES:

1. CONTROLLED LOW STRENGTH MATERIAL (CLSM) TO BE ONE-SACK CEMENT FINE AGGREGATE ADMIX WITH 28-DAY STRENGTH <300 PSI.

N.T.S. A (7B 7B) CONDENSATE SUMP SECTION

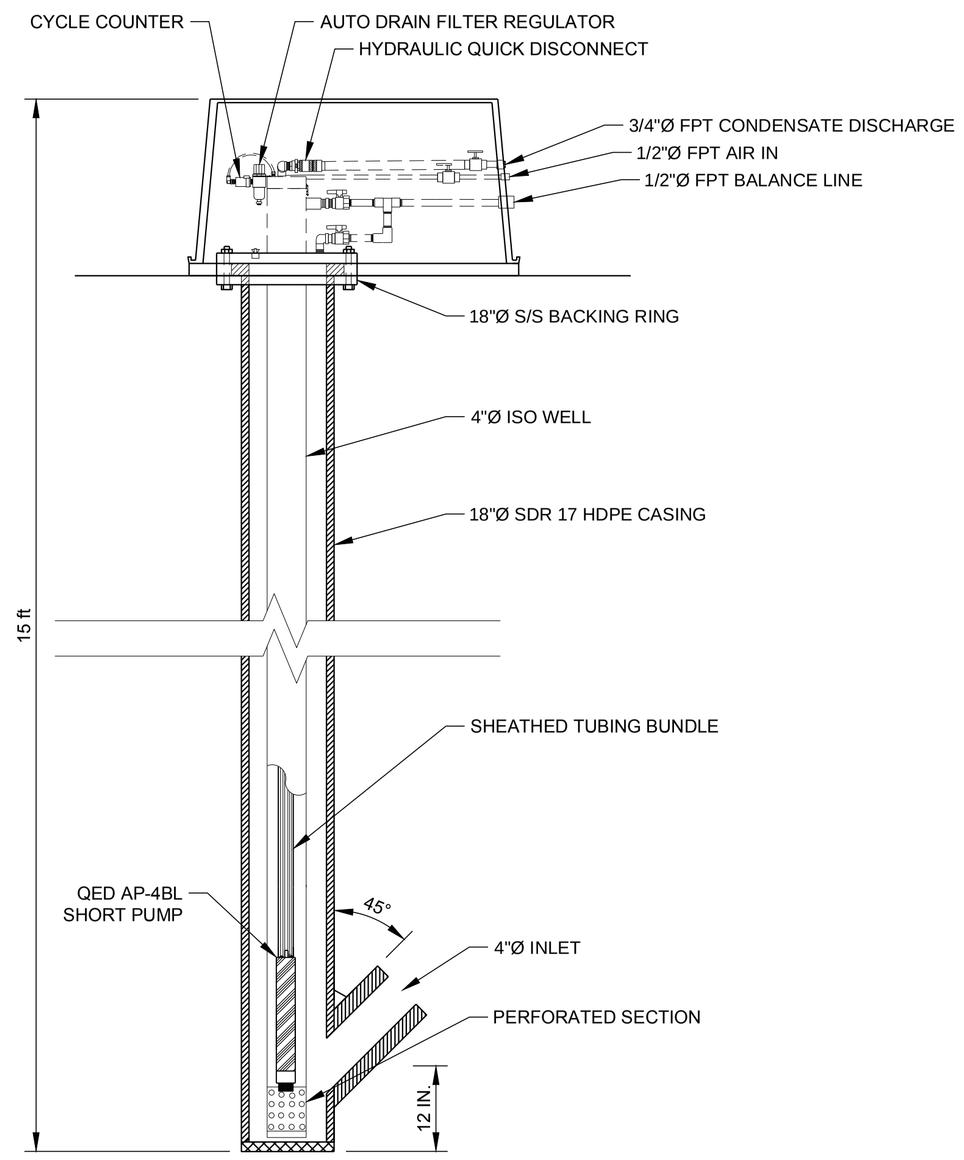

N.T.S. 2 (7B 7B) CONDENSATE SUMP

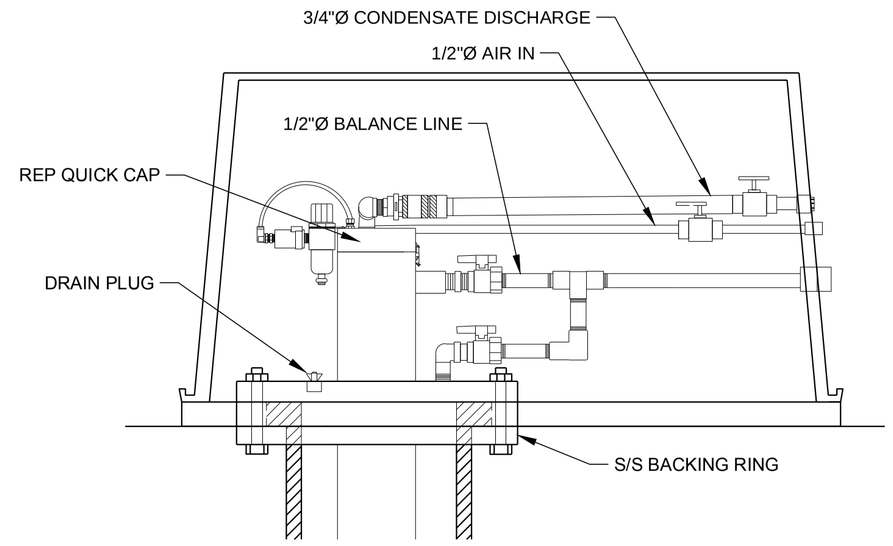

N.T.S. 3 (7B 7B) CONDENSATE SUMP

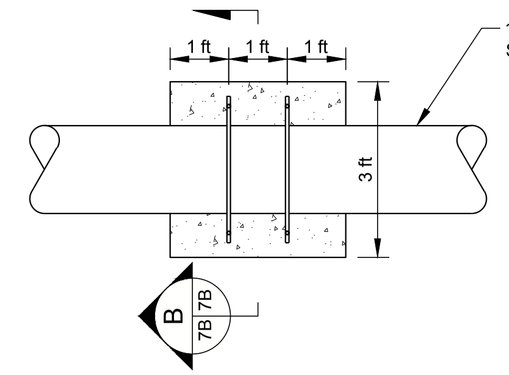

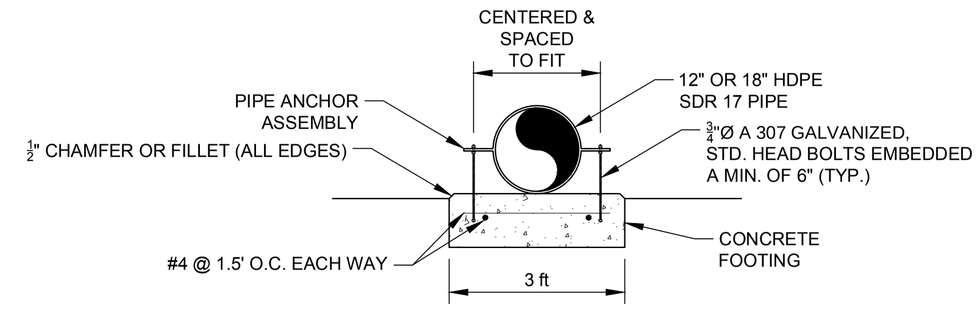

N.T.S. B (7B 7B) HEADER PIPE ANCHOR BLOCK DETAIL

THE PROJECT WAS ORIGINALLY DESIGNED AND BID AS A REPLACEMENT OF THE BLOWER/FLARE STATION THAT INCLUDED REUSING SEVERAL COMPONENTS OF THE EXISTING FACILITIES AND 240 VAC MAIN POWER SUPPLY. THE CURRENT PROJECT, BIDDING PROCESS AND BID FORM IS BASED ON UPGRADING THE FACILITY TO USE 480 VAC POWER, REUSING VERY FEW AND SELECTED FACILITIES, AND USING A REVISED LAYOUT SHOWN ON SHEET 7A. ANY REFERENCES TO NEW 240 VAC EQUIPMENT IN THE PLANS OR SPECIFICATIONS ARE INTENDED TO BE 480 VAC.

Rev.	YYYY-MM-DD	DESCRIPTION	PREPARED	DESIGN	REVIEW	APPROVED
0	2016-08-19	ISSUED FOR BIDDING	MAL	APW	APW	RVW

CLIENT
WESTERN PLACER WASTE MANAGEMENT AUTHORITY
3033 FIDDYMENT ROAD
ROSEVILLE, CA. 95747

CONSULTANT
GOLDER ASSOCIATES, INC.
425 LAKESIDE DRIVE
SUNNYVALE, CALIFORNIA 94085
USA
+[1] (408) 220-9223
www.golder.com

PROJECT
WESTERN REGIONAL SANITARY LANDFILL
2016 GCCS EXPANSION

TITLE
CONDENSATE DETAILS

PROJECT No. 1420152 | Rev. 0 | 11 of 58 | DRAWING 7B

Path: \\sacramento\acad\Sites\Western Regional LF\CIVIL 3D\1420152_GCCS Expansion\Concept 2 (IFB Rev0)\ | File Name: 1418421_Final Equipment Layout Plan [Rev0].dwg
IF THIS MEASUREMENT DOES NOT MATCH WHAT IS SHOWN, THE SHEET SIZE HAS BEEN MODIFIED FROM: ANSI D
0 1 in

GENERAL NOTES

G1. THE CONTRACT CONCRETE DRAWINGS AND SPECIFICATIONS REPRESENT THE FINISHED STRUCTURE. THEY DO NOT INDICATE THE METHOD OR SEQUENCES OF CONSTRUCTION. THE CONTRACTOR SHALL PROVIDE ALL NECESSARY MEASURES TO PROTECT THE STRUCTURE DURING CONSTRUCTION. SUCH MEASURES SHALL INCLUDE, BUT NOT BE LIMITED TO, BRACING AND SHORING OF LOADS DUE TO CONSTRUCTION EQUIPMENT, BACKFILL AND WIND.

G2. THE CONTRACTOR SHALL ALSO ASSUME RESPONSIBILITY AND PROVIDE ALL NECESSARY SAFETY PRECAUTIONS METHODS, TECHNIQUES, SEQUENCES OR PROCEDURES REQUIRED TO PERFORM THE WORK IN ACCORDANCE WITH OSHA, OWNER AND OTHER AGENCY REGULATIONS.

G3. IMMEDIATELY NOTIFY THE ENGINEER WHEN EMBEDDED ITEMS ARE FOUND TO CONFLICT WITH FORM FRAMEWORK, REINFORCING STEEL, OR OTHER EMBEDMENTS. THE ENGINEER SHALL SPECIFY MEASURES TO CORRECT THE CONFLICT.

G4. ANY FABRICATION OR CONSTRUCTION DONE PRIOR TO APPROVAL OF DRAWINGS WILL BE DONE AT THE CONTRACTORS RISK AND ANY REMEDIES TO CORRECT ANY WORK DONE PRIOR TO APPROVAL WILL BE AT THE CONTRACTOR'S EXPENSE. THE CONTRACTOR SHALL PROVIDE AS-BUILT DRAWINGS SHOWING LAYOUT OF STEEL REINFORCEMENT, ANCHORAGE AND EMBEDMENTS FOR ALL DEVIATIONS FROM CONTRACT DRAWINGS.

EXISTING CONDITIONS: CONTRACTOR SHALL EXAMINE ALL ELEVATIONS AND DIMENSIONS FOR EXISTING CONDITIONS IN THE FIELD BEFORE PROCEEDING. CONTRACTOR SHALL NOTIFY THE CONSTRUCTION MANAGER OF ANY DISCREPANCIES OR FIELD CHANGES PRIOR TO INSTALLATION OR FABRICATION. IN CASE OF DISCREPANCIES BETWEEN THE EXISTING CONDITIONS AND THE DRAWINGS, THE CONTRACTOR SHALL OBTAIN DIRECTIONS FROM THE CONSTRUCTION MANAGER BEFORE PRECEDING. DIMENSIONS NOTED AS PLUS OR MINUS (±) INDICATE UNVERIFIED DIMENSIONS AND ARE APPROXIMATE. NOTIFY CONSTRUCTION MANAGER IMMEDIATELY OF CONFLICT OR EXCESSIVE VARIATIONS FORM INDICATED DIMENSIONS. DO NOT SCALE DRAWINGS.

FOUNDATION GENERAL NOTES

F1. FOUNDATIONS SHALL BE CONSTRUCTED TO THE DIMENSIONS AS SHOWN ON THE STRUCTURAL DRAWINGS.

F2. NO STRUCTURAL CONCRETE SHALL BE POURED IN THE FOOTING OR SLAB EXCAVATIONS CONTAINING WATER.

F3. FLOW FILL CONCRETE (3000 PSI MINIMUM) MAY BE USED TO LEVEL GRADE BELOW FOOTINGS AND SLABS UPON APPROVAL OF THE DESIGN ENGINEER.

F3. EXCAVATION SHALL NOT ENCROACH BEYOND A 45° LINE EXTENDING FROM THE TOE OF AN EXISTING STRUCTURE/EQUIPMENT FOOTING.

CONCRETE GENERAL NOTES

C1. PRIOR TO PLACING CONCRETE, CONTRACTOR SHALL VERIFY THE REQUIREMENTS FOR ALL MECHANICAL AND ELECTRICAL SERVICES FOR THE LOCATION OF EMBEDDED ITEMS: (HOLES, UTILITIES, AND OTHERS).

C2. MATERIAL FORMING, PLACING, FINISHING AND CURING SHALL BE IN ACCORDANCE WITH THE REQUIREMENTS OF ACI 318 SPECIFICATION.

C3. ALL CONCRETE SHALL HAVE A MINIMUM COMPRESSIVE STRENGTH (f'c) OF 4000 PSI AT THE AGE OF 28 DAYS.

C4. REINFORCING BARS SHALL BE DEFORMED BARS AND SHALL CONFORM TO ASTM A615, GRADE 60, EXCEPT AS NOTED.

C5. PROVIDE BAR SUPPORTS AND SPACERS TO PLACE ALL BARS IN PROPER LOCATION, AND WIRE ADEQUATELY AT INTERSECTIONS TO HOLD BARS FIRMLY IN POSITION WHILE CONCRETE IS PLACED.

C6. CONTINUOUS BARS SHALL LAP AND DOWELS SHALL PROJECT ADEQUATELY TO PROVIDE A CLASS B SPLICE IN ACCORDANCE WITH ACI 318 CHAPTER 12.

C7. FOR REINFORCED CONCRETE, UNLESS NOTED OTHERWISE ON THE DESIGN DRAWINGS CLASS B SPLICE IS DEFINED AS 1.3 Ld.
ALL LAPS ARE TENSION SPLICES, UNLESS OTHERWISE NOTED ON THE DRAWINGS.
"TOP BARS" ARE HORIZONTAL BARS WITH MORE THAN 12" OF FRESH CONCRETE CAST BELOW THE BARS.

REINFORCING BAR SPLICE LENGTH SCHEDULE FOR GRADE 60, UNCOATED, AND FOR (f'c) OF 4000 PSI			
BAR SIZE	TENSION SPLICE LENGTH=1.3ld		COMPRESSION SPLICE LENGTH
	TOP BARS	OTHER BARS	
#4	32"	25"	15"
#5	40"	31"	19"
#6	48"	37"	23"

C8. DO NOT SPLICE AT MAXIMUM STRESS LOCATIONS.

C9. THE CONCRETE MIX DESIGN SHALL BE AS FOLLOWS UNLESS OTHERWISE SHOWN ON THE DESIGN DRAWINGS:

f'c-28 DAY DESIGN COMPRESSION STRENGTH	MAXIMUM AGGREGATE SIZE	SLUMP AT POINT OF PLACEMENT	AIR ENTRAINED PERCENT (±1%)	MAXIMUM WATER/CEMENT RATIO
4000 psi	3/4"	4"	4-6.0	0.5

C10. CONCRETE COVER FOR REINFORCEMENT (UNLESS OTHERWISE NOTED):
A. CONCRETE POURED AGAINST EARTH ..... 3"
B. CONCRETE POURED IN FORMS BUT EXPOSED TO WEATHER OR EARTH
(1.) #5 BARS OR SMALLER..... 1 1/2"
(2.) BARS LARGER THAN #5..... 2"

C11. ALL REINFORCING BAR HOOKS SHALL BE STANDARD HOOKS, UNLESS NOTED OTHERWISE.

GENERAL STRUCTURAL STEEL NOTES

SI1. THIS SPECIAL INSPECTION PROGRAM IS PROVIDED IN CONFORMANCE WITH CBC SECTION 1704.

SI2. THE ITEMS CHECKED WITH AN "X" IN THE "SPECIAL INSPECTION SCHEDULE" SHALL BE INSPECTED IN ACCORDANCE WITH CBC CHAPTER 17 BY A CERTIFIED SPECIAL INSPECTOR. A CERTIFIED TESTING AGENCY SHALL COMPLETE MATERIAL SAMPLING AND TESTING REQUIREMENTS. THE SPECIAL INSPECTOR AND TESTING AGENCY SHALL FURNISH REPORTS TO THE ENGINEER OF RECORD AND CONTRACTOR, FOR EACH TEST OR REPORT. ALL DISCREPANCIES SHALL BE BROUGHT TO THE IMMEDIATE ATTENTION OF THE CONTRACTOR FOR CORRECTION. IF DISCREPANCIES ARE NOT CORRECTED, ALL REMANDING DISCREPANCIES SHALL BE CLEARLY SHOWN ON THE REPORT, WITH A RECORD OF THE UNCORRECTED ITEMS. THE REPORT SHALL BE IMMEDIATELY FURNISHED TO THE ENGINEER OF RECORD AND CONTRACTOR AFTER EACH TEST RESULT OR INSPECTION. SPECIAL INSPECTION TESTING REQUIREMENTS APPLY EQUALLY TO ALL BIDDER DESIGNED COMPONENTS. THE SPECIAL INSPECTOR SHALL BE EMPLOYED BY THE OWNER, ENGINEER OF RECORD, OR THE AGENT OF THE OWNER, BUT NOT CONTRACTOR OR ANY OTHER PERSON RESPONSIBLE FOR THE WORK. THE CONTRACTOR SHALL BE RESPONSIBLE FOR CONTACTING THE SPECIAL INSPECTOR AND SCHEDULING ANY SPECIAL INSPECTION, WITHIN THE SCHEDULING REQUIREMENTS OF THE TESTING AGENCY OR SPECIAL INSPECTOR.

SI3. CONTINUOUS SPECIAL INSPECTION MEANS THAT THE SPECIAL INSPECTOR IS ON THE SITE AT ALL THE TIMES OBSERVING THE WORK REQUIRING INSPECTION. PERIODIC SPECIAL INSPECTION MEANS THAT THE SPECIAL INSPECTOR IS ON THE SITE AT THE TIME INTERVALS NECESSARY TO CONFORM THAT ALL WORK REQUIRING SPECIAL INSPECTION IS IN COMPLIANCE.

SI4. INSPECTION OF CONCRETE SHALL BE IN ACCORDANCE WITH CBC SECTION 1705.3. THE CONCRETE CONSTRUCTION SHALL BE INSPECTED FOR COMPLIANCE WITH APPROVED CONSTRUCTION DOCUMENTS.

SI5 CONCRETE: MAKE ONE SET OF FOUR CYLINDERS OF MIXED AND PLACED CONCRETE. AS A MINIMUM, ONE SET SHALL BE TAKEN AT LEAST ONCE IN THE FIELD FOR EACH DAY, FOR EVERY 150 CUBIC YARDS OF CONCRETE, OR FOR EVERY 5000 FT2 OF SURFACE AREA OF SLABS AND WALLS.
CURE THE CYLINDERS IN THE FIELD FOR THREE DAYS IN THE SAME MANNER AS THE PLACED CONCRETE. AFTER THREE DAYS, TRANSPORT TO THE TESTING LABORATORY FOR COMPRESSIVE STRENGTH TESTING. PER SET, TEST ONE CYLINDER AT SEVEN DAYS AND TWO AT TWENTY-EIGHT DAYS. THE FINAL CYLINDER SHALL BE TESTED AT DISCRETION OF THE CONTRACTOR.

SPECIAL INSPECTION SCHEDULE AS PER 2013 CBC CHAPTER 17			
ITEM	CONTINUOUS INSPECTION	PERIODIC INSPECTION	COMMENTS
INSPECTION OF REINFORCING STEEL AND PLACEMENT		X	REF. NOTE SI2 AND SI3
VERIFYING USE OF DESIGN MIX		X	REF. NOTE SI2 AND SI3
AT THE TIME OF FRESH CONCRETE SAMPLING TO FABRICATE TEST SPECIMENTS	X		REF. NOTE SI2 AND SI3
INSPECTION OF CONCRETE PLACEMENT	X		REF. NOTE SI2, SI3 AND SI5

THE PROJECT WAS ORIGINALLY DESIGNED AND BID AS A REPLACEMENT OF THE BLOWER/FLARE STATION THAT INCLUDED REUSING SEVERAL COMPONENTS OF THE EXISTING FACILITIES AND 240 VAC MAIN POWER SUPPLY. THE CURRENT PROJECT, BIDDING PROCESS AND BID FORM IS BASED ON UPGRADING THE FACILITY TO USE 480 VAC POWER, REUSING VERY FEW AND SELECTED FACILITIES, AND USING A REVISED LAYOUT SHOWN ON SHEET 7A. ANY REFERENCES TO NEW 240 VAC EQUIPMENT IN THE PLANS OR SPECIFICATIONS ARE INTENDED TO BE 480 VAC.

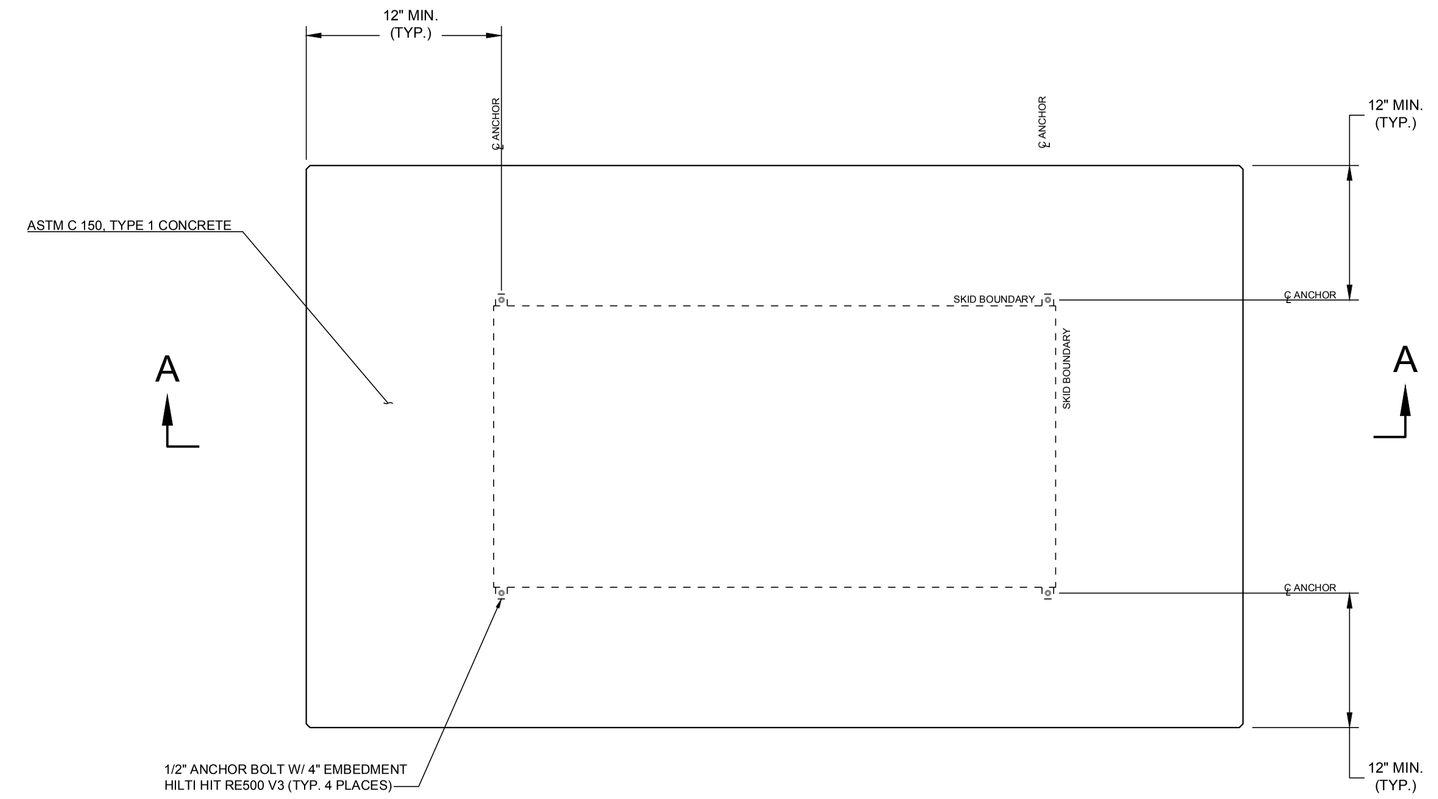

PLAN

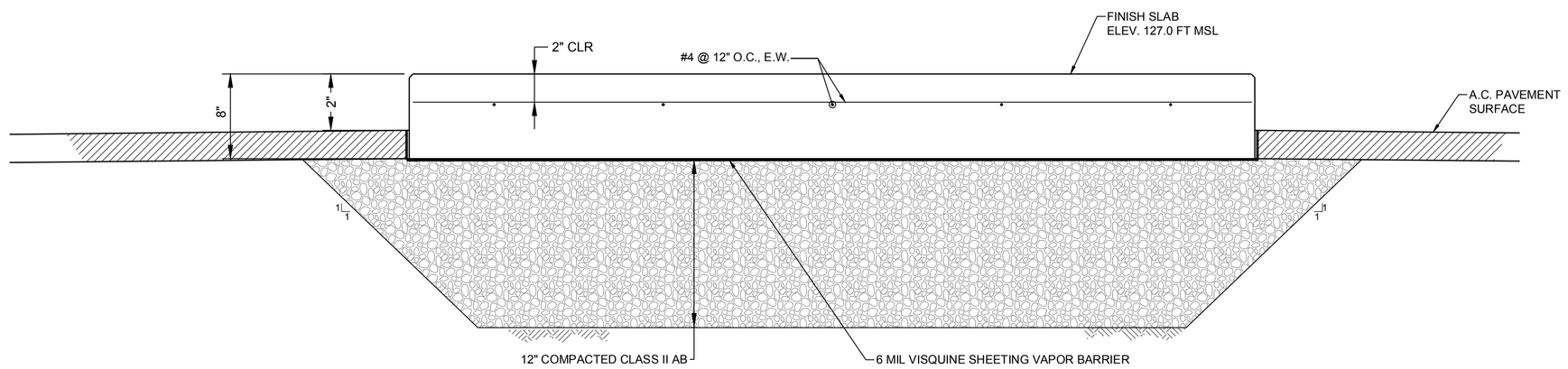

SECTION A-A

N.T.S. 1 EQUIPMENT PAD (7A|8)

Rev.	YYYY-MM-DD	DESCRIPTION	PREPARED	DESIGN	REVIEW	APPROVED
0	2016-08-19	ISSUED FOR BIDDING	MAL	APW	APW	RVW

CLIENT
WESTERN PLACER WASTE MANAGEMENT AUTHORITY
3033 FIDDYMENT ROAD
ROSEVILLE, CA. 95747

CONSULTANT
GOLDER ASSOCIATES, INC.
425 LAKESIDE DRIVE
SUNNYVALE, CALIFORNIA 94085
USA
+[1] (408) 220-9223
www.golder.com

PROJECT
WESTERN REGIONAL SANITARY LANDFILL
2016 GCCS EXPANSION

TITLE
STRUCTURAL NOTES AND DETAILS

PROJECT No. 1420152 | Rev. 0 | 12 of 58 | DRAWING 8

IF THIS MEASUREMENT DOES NOT MATCH WHAT IS SHOWN, THE SHEET SIZE HAS BEEN MODIFIED FROM: ANSI D

Path: \\sacramento\acad\Sites\Western Regional LF\CIVIL 3D\1420152_GCCS Expansion\Concept 2 (IFB RevO\) | File Name: 1418421_Flare Foundation.dwg

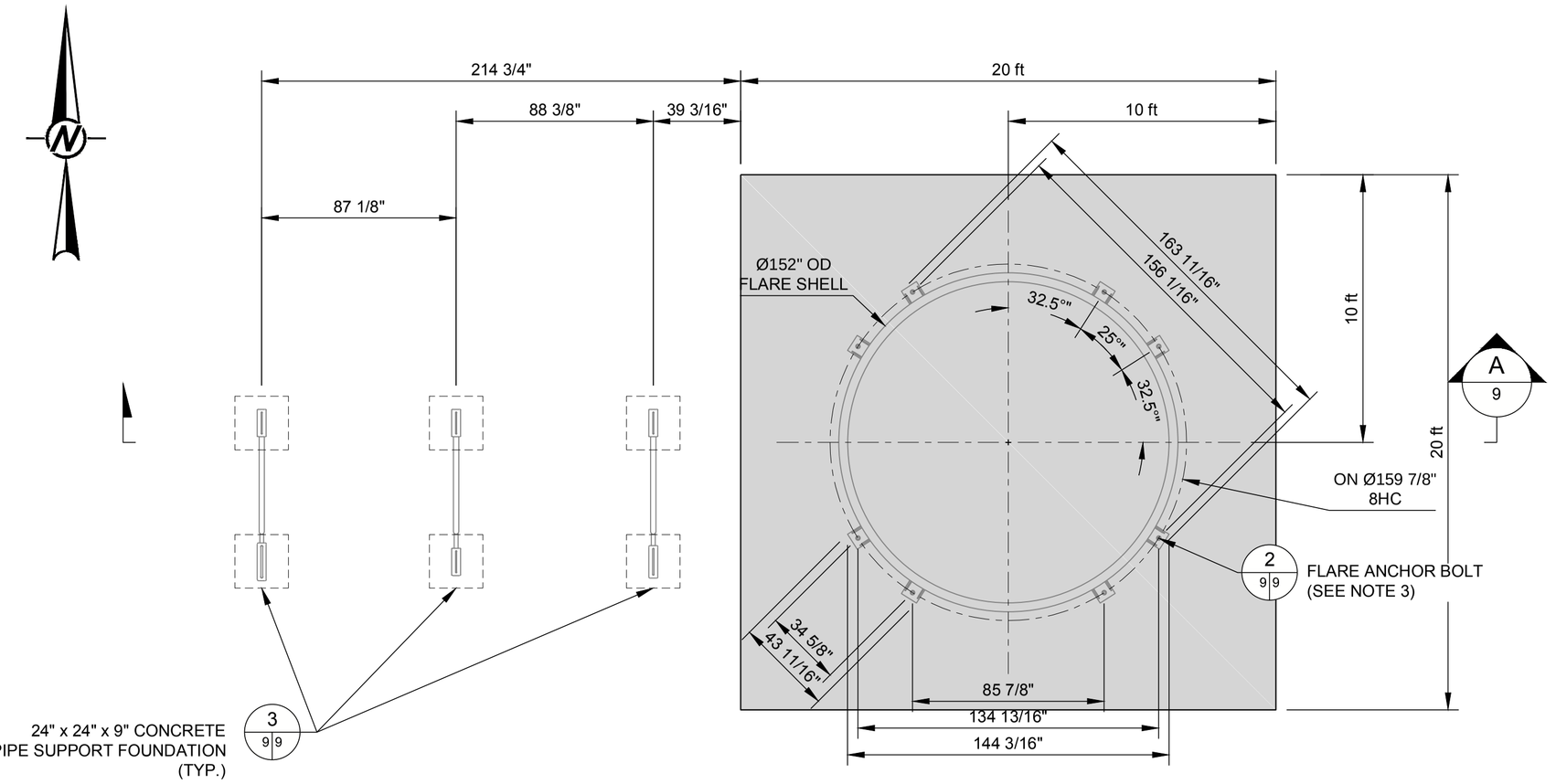

SCALE: 1"=4' 1 7|9 FLARE FOUNDATION PLAN VIEW

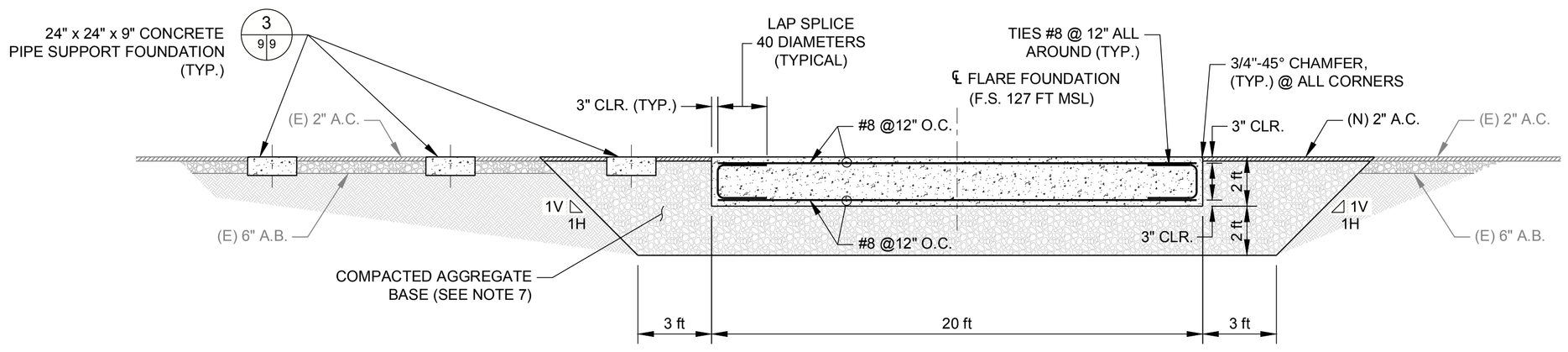

SCALE: 1"=4' A 9|9 SECTION A-A

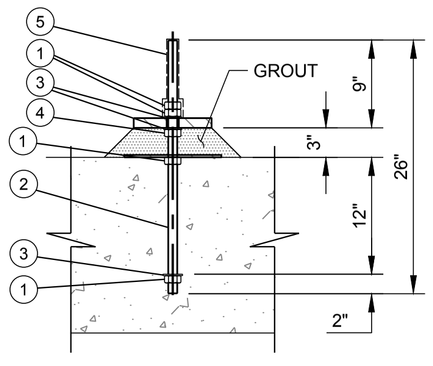

SCALE: 1"=1' 2 9|9 FLARE ANCHOR BOLT DETAIL

ANCHOR BOLT ASSEMBLY BILL OF MATERIAL (SEE NOTE 10)		
ITEM	QTY	DESCRIPTION
1	40	1-1/4" DIA HEAVY HEX NUT ASTM A563A
2	8	1-1/4" DIA ANCHOR ROD ASTM F1554 GRADE 36, 2'-2" LONG
3	16	1-1/4" DIA WASHER, ASTM F436
4	8	1-1/4" DIA LEVELING NUT, HEX JAM NUT OR APPROVED EQUAL
5	8	ANCHOR BOLT CAP
6	1	FLARE TEMPLATE (SEE NOTE 3)

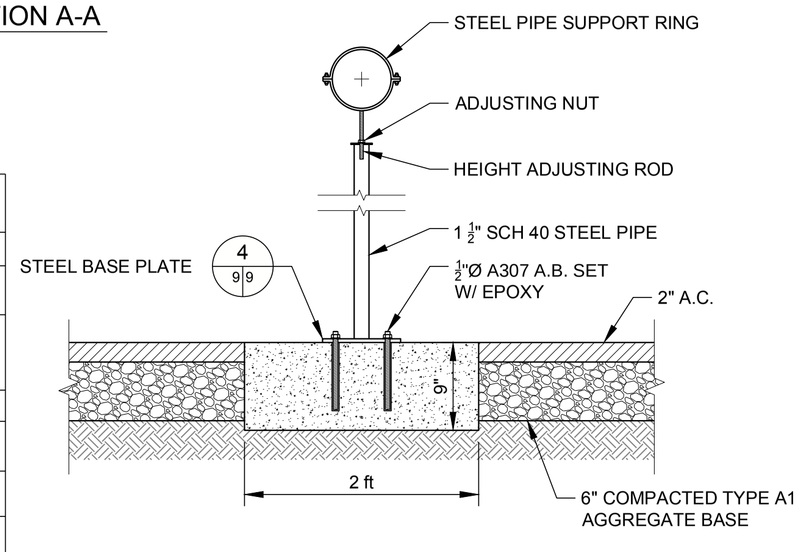

N.T.S. 3 9|9 PIPE STAND DETAIL (TYP.)

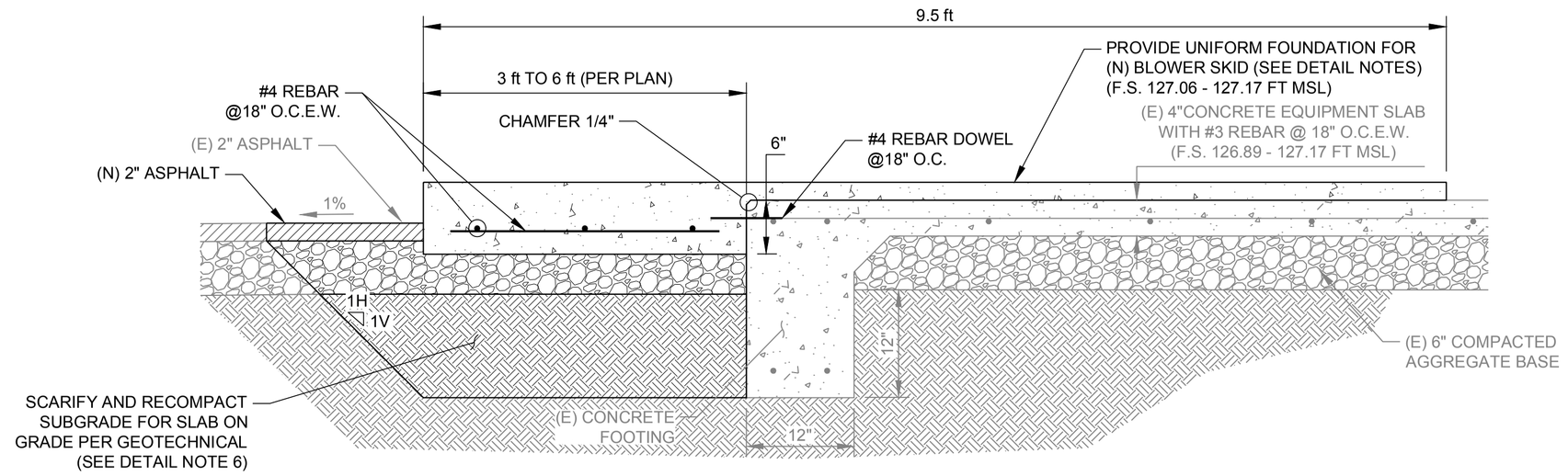

SCALE: 1"=1' 5 7|9 EQUIPMENT PAD EXTENSION DETAIL

DETAIL NOTES:

1. LOCATE EXISTING SLAB REINFORCEMENT TO MINIMIZE ENCOUNTERS DURING DRILLING.
2. ROUGHEN EXISTING CONCRETE CONTACT SURFACES TO FULL AMPLITUDE OF APPROXIMATELY ¼" AND REMOVE ALL LOOSE MATERIAL.
3. DRILL 5/8" DIAMETER HOLE, 8" DEEP HOLE FOR ADHESIVE ANCHORING OF #4 REBAR DOWEL (ASTM A615 GRADE 60).
4. CLEAN HOLE OF ALL LOOSE MATERIALS, DUST AND MOISTURE IN CONFORMANCE WITH ANCHOR ADHESIVE SYSTEM MANUFACTURER'S REQUIREMENTS, USING MATCHED-TOLERANCE STEEL BRUSH, FOLLOWED BY COMPRESSED AIR.
5. PREPARE AND INJECT ANCHOR ADHESIVE SYSTEM (HILTY HIT-HY 200-R OR APPROVED EQUAL) IN CONFORMANCE WITH MANUFACTURER'S REQUIREMENTS.
6. CONSTRUCT LEVEL AND FLAT STRUCTURAL SURFACE FOR SUPPORT OF (N) BLOWER SKID, USING BONDED CONCRETE OVERLAYS BETWEEN EXISTING RAISED EQUIPMENT PADS. SEE EXISTING FINISH SLAB ELEVATION AND CONDITIONS IN LAWRENCE AND ASSOCIATES, "GAS-EXTRACTION SYSTEM AS-BUILT PLANS, 1996.

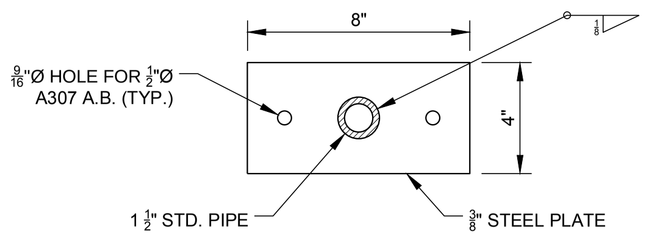

N.T.S. 4 9|9 STEEL PLATE DETAIL

THE PROJECT WAS ORIGINALLY DESIGNED AND BID AS A REPLACEMENT OF THE BLOWER/FLARE STATION THAT INCLUDED REUSING SEVERAL COMPONENTS OF THE EXISTING FACILITIES AND 240 VAC MAIN POWER SUPPLY. THE CURRENT PROJECT, BIDDING PROCESS AND BID FORM IS BASED ON UPGRADING THE FACILITY TO USE 480 VAC POWER, REUSING VERY FEW AND SELECTED FACILITIES, AND USING A REVISED LAYOUT SHOWN ON SHEET 7A. ANY REFERENCES TO NEW 240 VAC EQUIPMENT IN THE PLANS OR SPECIFICATIONS ARE INTENDED TO BE 480 VAC.

GEOTECHNICAL NOTE(S)

1. FOR DETAILS ON SUBSURFACE CONDITIONS, RECOMMENDED SOIL BEARING PRESSURE, SITE GRADING, AND SUBGRADE PREPARATION REQUIREMENTS, REFER TO "GEOTECHNICAL INVESTIGATIONS REPORT" BY BROWN & MILLS, INC. DATED FEBRUARY 28, 1995.
2. FOUNDATION EXCAVATION AND FILL SHALL BE OBSERVED AND APPROVED BY THE PROJECT GEOTECHNICAL ENGINEER PRIOR TO PLACEMENT OF REINFORCEMENT AND CONCRETE.
3. ALL FOUNDATIONS SHALL BE FOUNDED AT LEAST 3 FEET BELOW EXISTING GRADES AFTER REMOVING THE EXISTING FILL SOILS.
4. THE SUBGRADE BELOW THE FOUNDATIONS SHALL BE SCARIFIED AND RE-COMPACTED TO 95% RELATIVE COMPACTION (RELATIVE TO THE MODIFIED PROCTOR TEST; I.E., ASTM D1557) TO A MINIMUM DEPTH OF 12 INCHES. THE PROJECT GEOTECHNICAL ENGINEER MAY WAIVE THIS REQUIREMENT IF DENSE NATIVE SOIL IS ENCOUNTERED AT OR ABOVE THE 3 FEET EXCAVATION DEPTH.
5. ALL FILL AND BACKFILL MATERIALS SHALL BE APPROVED BY THE PROJECT GEOTECHNICAL ENGINEER BEFORE PLACEMENT. ALL BACKFILL SHALL CONSIST OF GRANULAR MATERIAL WITH A PLASTICITY INDEX OF LESS THAN 10 AND PLACED IN 8-INCH LOOSE LIFTS AND COMPACTED TO MINIMUM 90 PERCENT RELATIVE COMPACTION (ASTM D1557) AT A MOISTURE CONTENT OF BETWEEN -3 AND +3% OF THE OPTIMUM DETERMINED FROM ASTM D1557. BACKFILL NEXT TO FOUNDATIONS AND PEDESTALS SHALL BE DONE USING A HAND-OPERATED COMPACTOR IN 4-INCH LOOSE LIFTS.
6. THE EXISTING SUBGRADE BELOW THE DRAIN ROCK UNDERLYING THE SLAB-ON-GRADE SHALL BE SCARIFIED AND RE-COMPACTED TO 90 PERCENT RELATIVE COMPACTION (ASTM D1557) AT A MOISTURE CONTENT OF BETWEEN +2 AND +5% OF THE OPTIMUM DETERMINED FROM ASTM D1557, TO A MINIMUM DEPTH OF 12 INCHES BELOW THE BOTTOM OF DRAIN ROCK. THE SUBGRADE PREPARATION SHALL BE OBSERVED BY A QUALIFIED GEOTECHNICAL ENGINEER. IF UNACCEPTABLE SOILS ARE ENCOUNTERED, SUCH SOILS SHALL BE REMOVED AND REPLACED WITH BACKFILL AS NOTED IN NO. 5 ABOVE.

NOTE(S)

1. DIMENSIONS ARE IN FEET AND INCHES.
2. FLARE FOUNDATION DESIGN CRITERIA

   WIND DESIGN:
   WIND SPEED: 110 MPH (3-SEC PEAK GUST), EXPOSURE CATEGORY C

   ALLOWABLE SOIL BEARING:
   2000 PSF (FOR ENGINEERED FILL)
   PER GEOTECHNICAL REPORT, REMOVE (E) FILL SOILS TO (E) CEMENTED SILTSTONE SURFACE (HARDPAN), PLUS EXCAVATE AN ADDITIONAL 3 INCHES. CONSTRUCT ENGINEERED FILL (OR PLACE LEAN CONCRETE) TO FOUNDATION SUBGRADE. ENGINEER SHALL VERIFY THAT ALL FOUNDATIONS FULLY PENETRATE EXISTING FILL SOILS.

   CONCRETE STRENGTH:
   F'C= 3000 PSI @ 28 DAYS

   CEMENT:
   ASTM C150 TYPE I

   REINFORCING STEEL:
   ASTM A615 GRADE 60 DEFORMED BAR

   SUBGRADE COMPACTION FOR ENGINEERED FILL:
   95 PERCENT MODIFIED PROCTOR MAXIMUM DENSITY

   EARTHQUAKE LOADS:

   FLARE WEIGHT: 70 KIPS
   BASE SHEAR: 21 KIPS
   MOMENT: 420 FT-KIPS

   WIND LOADS:

   FLARE
   BASE SHEAR: 27.4 KIPS
   MOMENT: 731 FT-KIPS
3. ANCHOR BOLT TEMPLATE SHALL BE PROVIDED BY FLARE MANUFACTURER. ANCHOR BOLT SIZE AND PATTERN SHALL BE VERIFIED WITH MANUFACTURER'S SHOP DRAWINGS PRIOR TO CONSTRUCTION.
4. FOUR (4) CONCRETE TEST CYLINDERS SHALL BE TAKEN BY THE CONTRACTOR AND DELIVERED TO THE TESTING LAB APPROVED BY OWNER. ONE TEST CYLINDER SHALL BE TESTED AT 7 DAYS FOR 70 PERCENT OF DESIGN STRENGTH. TWO SHALL BE TESTED AT 28 DAYS FOR FULL DESIGN STRENGTH, AND ONE SHALL BE HELD UNTIL THE FINAL ACCEPTANCE OF THE PROJECT.
5. FINISH GRADE TO DRAIN. PLACE EARTH FILL PER SPECIFICATION.
6. CONTRACTOR SHALL POTHOLE, LOCATE AND PROTECT ALL EXISTING UNDERGROUND UTILITIES.
7. THE AGGREGATE BASE SHOULD BE COMPACTED TO 95 PERCENT RELATIVE COMPACTION (ASTM D 1557) USING A VIBRATORY ROLLER. AGGREGATE BASE SHALL HAVE LESS THAN 6 PERCENT OF MASS PASSING #200 MESH SIEVE IN ACCORDANCE WITH ASTM D422.
8. FOUNDATION AND ANCHOR BOLT DIMENSIONS MAY VARY BASED ON FINAL EQUIPMENT SHOP DRAWINGS.
9. FOR BLOWER SKID, USE 3/4" ANCHOR BOLT W/ 4 3/4" EMBEDMENT HILTI EXP ANCHOR KB-TZ SS 304 OR APPROVED EQUAL.
10. ANCHOR BOLT ASSEMBLY SHALL HAVE A GALVANIZED FINISH.
11. GROUT BY "MASTERFLOW 928". NON-SHRINK GROUT SHALL BE MANUFACTURED BY MASTER-BUILDERS OR APPROVED EQUAL.
12. DO NOT USE FLARE UNTIL CONCRETE HAS CURED 28 DAYS.

Rev.	YYYY-MM-DD	DESCRIPTION	PREPARED	DESIGN	REVIEW	APPROVED
0	2016-08-19	ISSUED FOR BIDDING	MAL	APW	APW	RVW

CLIENT
WESTERN PLACER WASTE MANAGEMENT AUTHORITY
3033 FIDDYMENT ROAD
ROSEVILLE, CA. 95747

CONSULTANT
GOLDER ASSOCIATES, INC.
425 LAKESIDE DRIVE
SUNNYVALE, CALIFORNIA 94085
USA
+[1] (408) 220-9223
www.golder.com

PROJECT
WESTERN REGIONAL SANITARY LANDFILL
2016 GCCS EXPANSION

TITLE
BLOWER/ FLARE STATION FOUNDATION DETAILS

PROJECT No. 1420152 | Rev. 0 | 13 of 58 | DRAWING 9

IF THIS MEASUREMENT DOES NOT MATCH WHAT IS SHOWN, THE SHEET SIZE HAS BEEN MODIFIED FROM: ANSI D

Path: \\sacramento\acad\Sites\Western Regional LF\CIVIL 3D\1420152_GCCS Expansion\Concept 2 (IFB Rev0)\ | File Name: 1418421_Flare Foundation.dwg

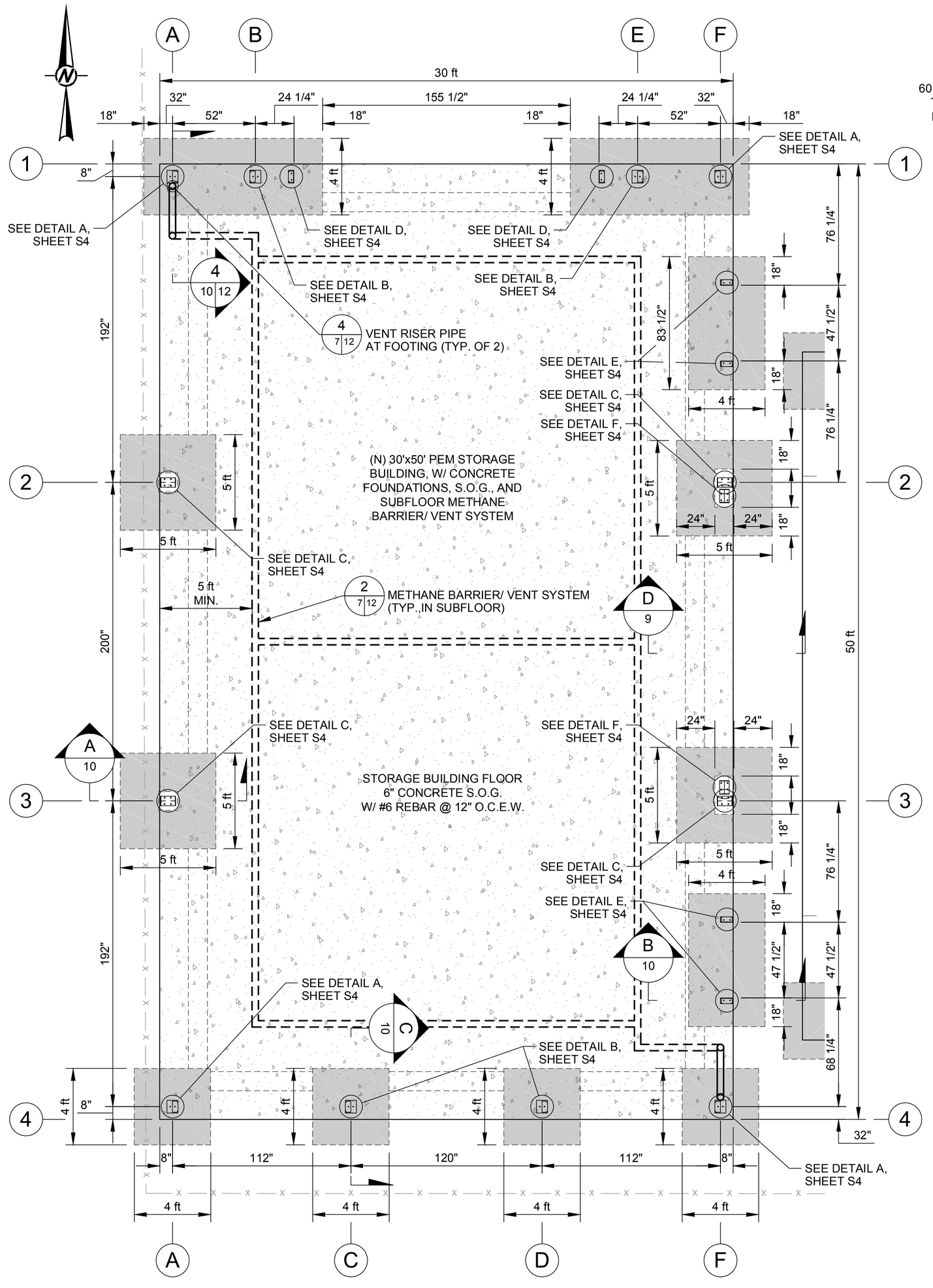

SCALE: 1"=4' 1 7 10 PEM STORAGE BUILDING FOUNDATION PLAN VIEW

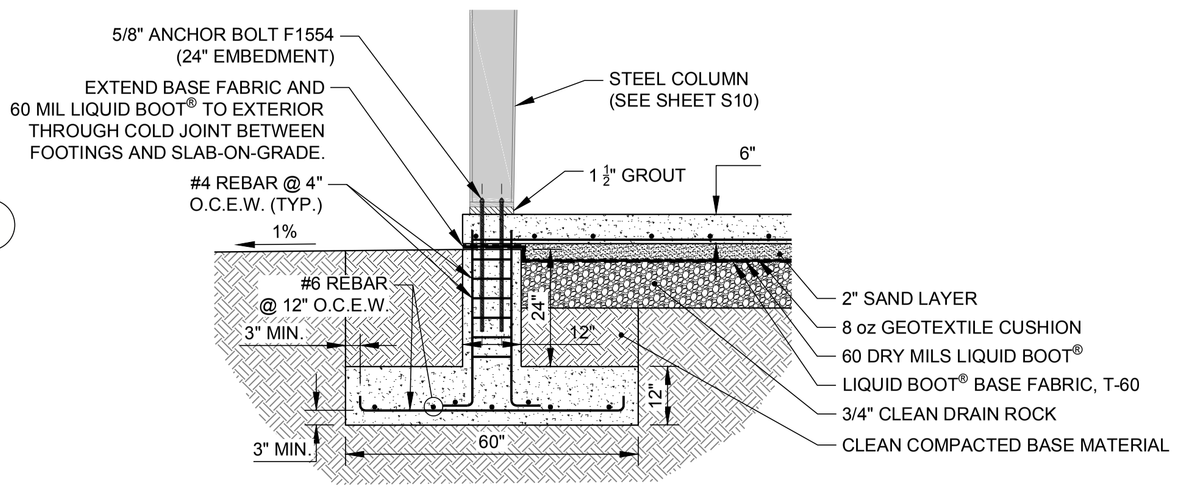

SCALE: 1"=2' A 10 SECTION A

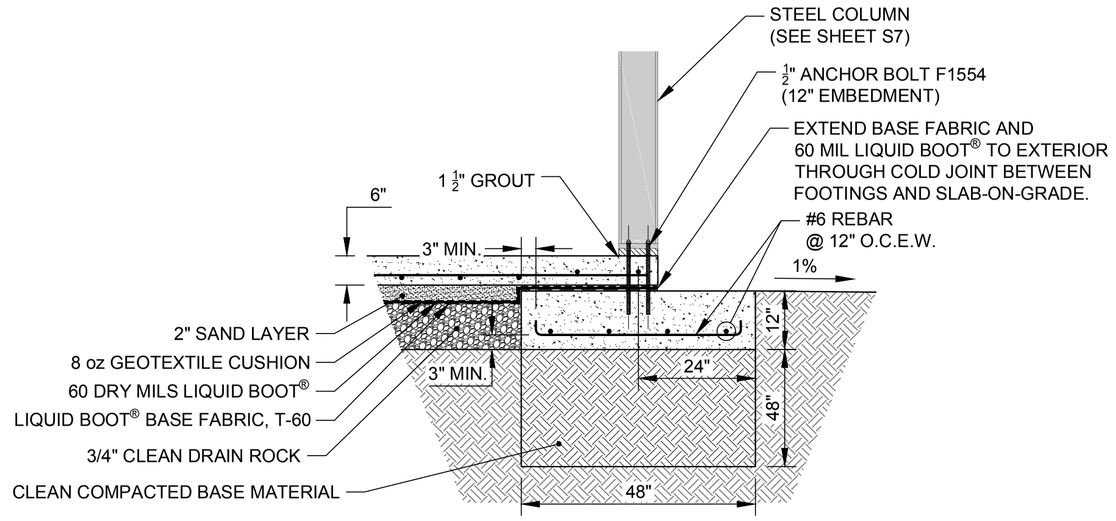

SCALE: 1"=2' B 10 SECTION B

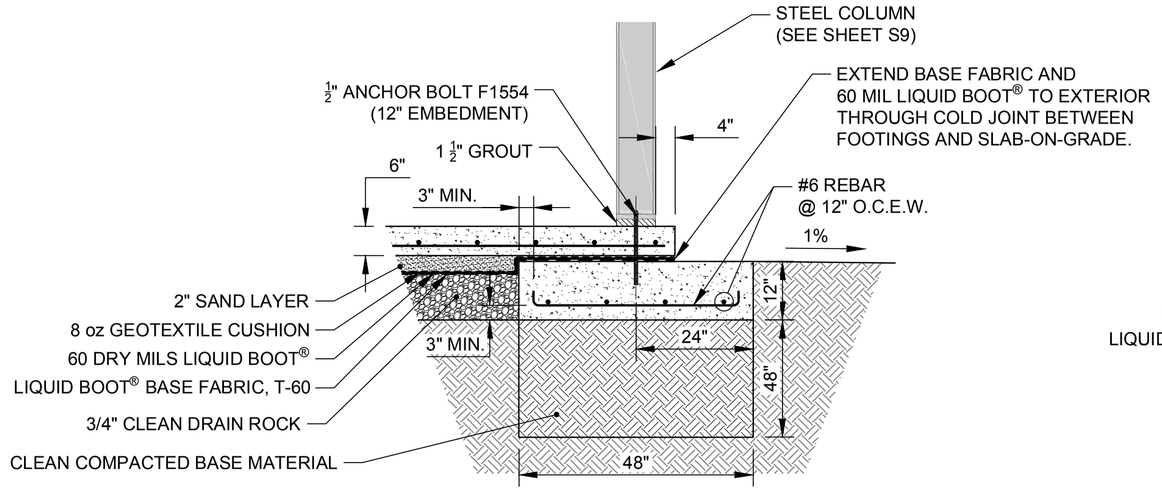

SCALE: 1"=2' C 10 SECTION C

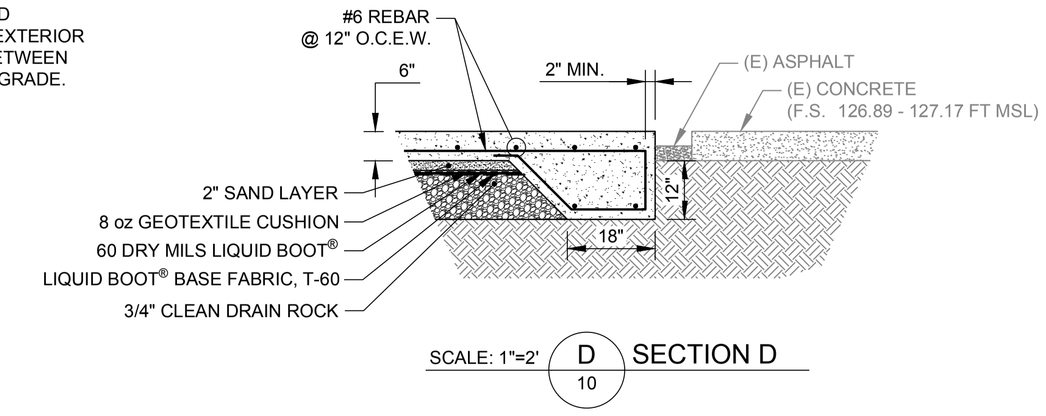

SCALE: 1"=2' D 10 SECTION D

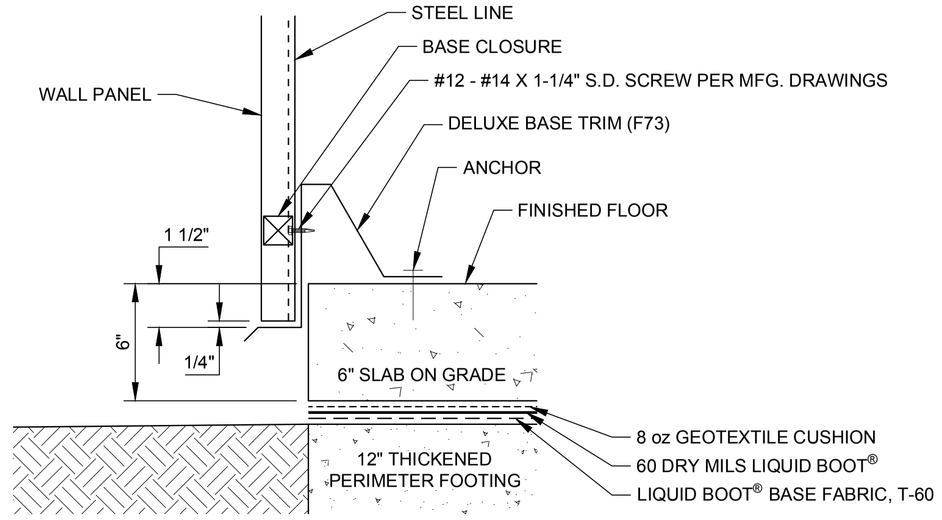

* MINIMUM ¼" DIA. ANCHOR OR EQUIVALENT POWER-DRIVEN FASTENER AT 24" ON CENTER MAXIMUM.

SCALE: NTS 2 10 10 SECTION THRU WALL PANEL AND CONCRETE FOUNDATION WITH DELUXE BASE TRIM

THE PROJECT WAS ORIGINALLY DESIGNED AND BID AS A REPLACEMENT OF THE BLOWER/FLARE STATION THAT INCLUDED REUSING SEVERAL COMPONENTS OF THE EXISTING FACILITIES AND 240 VAC MAIN POWER SUPPLY. THE CURRENT PROJECT, BIDDING PROCESS AND BID FORM IS BASED ON UPGRADING THE FACILITY TO USE 480 VAC POWER, REUSING VERY FEW AND SELECTED FACILITIES, AND USING A REVISED LAYOUT SHOWN ON SHEET 7A. ANY REFERENCES TO NEW 240 VAC EQUIPMENT IN THE PLANS OR SPECIFICATIONS ARE INTENDED TO BE 480 VAC.

GEOTECHNICAL NOTE(S)

1. FOR DETAILS ON SUBSURFACE CONDITIONS, RECOMMENDED SOIL BEARING PRESSURE, SITE GRADING, AND SUBGRADE PREPARATION REQUIREMENTS, REFER TO "GEOTECHNICAL INVESTIGATIONS REPORT" BY BROWN & MILLS, INC. DATED FEBRUARY 28, 1995.
2. FOUNDATION EXCAVATION AND FILL SHALL BE OBSERVED AND APPROVED BY THE PROJECT GEOTECHNICAL ENGINEER PRIOR TO PLACEMENT OF REINFORCEMENT AND CONCRETE.
3. ALL FOUNDATIONS SHALL BE FOUNDED AT LEAST 3 FEET BELOW EXISTING GRADES AFTER REMOVING THE EXISTING FILL SOILS.
4. THE SUBGRADE BELOW THE FOUNDATIONS SHALL BE SCARIFIED AND RE-COMPACTED TO 95% RELATIVE COMPACTION (RELATIVE TO THE MODIFIED PROCTOR TEST; I.E., ASTM D1557) TO A MINIMUM DEPTH OF 12 INCHES. THE PROJECT GEOTECHNICAL ENGINEER MAY WAIVE THIS REQUIREMENT IF DENSE NATIVE SOIL IS ENCOUNTERED AT OR ABOVE THE 3 FEET EXCAVATION DEPTH.
5. ALL FILL AND BACKFILL MATERIALS SHALL BE APPROVED BY THE PROJECT GEOTECHNICAL ENGINEER BEFORE PLACEMENT. ALL BACKFILL SHALL CONSIST OF GRANULAR MATERIAL WITH A PLASTICITY INDEX OF LESS THAN 10 AND PLACED IN 8-INCH LOOSE LIFTS AND COMPACTED TO MINIMUM 90 PERCENT RELATIVE COMPACTION (ASTM D1557) AT A MOISTURE CONTENT OF BETWEEN -3 AND +3% OF THE OPTIMUM DETERMINED FROM ASTM D1557. BACKFILL NEXT TO FOUNDATIONS AND PEDESTALS SHALL BE DONE USING A HAND-OPERATED COMPACTOR IN 4-INCH LOOSE LIFTS.
6. THE EXISTING SUBGRADE BELOW THE DRAIN ROCK UNDERLYING THE SLAB-ON-GRADE SHALL BE SCARIFIED AND RE-COMPACTED TO 90 PERCENT RELATIVE COMPACTION (ASTM D1557) AT A MOISTURE CONTENT OF BETWEEN +2 AND +5% OF THE OPTIMUM DETERMINED FROM ASTM D1557, TO A MINIMUM DEPTH OF 12 INCHES BELOW THE BOTTOM OF DRAIN ROCK. THE SUBGRADE PREPARATION SHALL BE OBSERVED BY A QUALIFIED GEOTECHNICAL ENGINEER. IF UNACCEPTABLE SOILS ARE ENCOUNTERED, SUCH SOILS SHALL BE REMOVED AND REPLACED WITH BACKFILL AS NOTED IN NO. 5 ABOVE.

Rev.	YYYY-MM-DD	DESCRIPTION	PREPARED	DESIGN	REVIEW	APPROVED
0	2016-08-19	ISSUED FOR BIDDING	MAL	APW	APW	RVW

CLIENT
WESTERN PLACER WASTE MANAGEMENT AUTHORITY
3033 FIDDYMENT ROAD
ROSEVILLE, CA. 95747

CONSULTANT
GOLDER ASSOCIATES, INC.
425 LAKESIDE DRIVE
SUNNYVALE, CALIFORNIA 94085
USA
+[1] (408) 220-9223
www.golder.com

PROJECT
WESTERN REGIONAL SANITARY LANDFILL
2016 GCCS EXPANSION

TITLE
PEM STORAGE BUILDING FOUNDATION DETAILS

PROJECT No. 1420152 | Rev. 0 | 14 of 58 | DRAWING 10

IF THIS MEASUREMENT DOES NOT MATCH WHAT IS SHOWN, THE SHEET SIZE HAS BEEN MODIFIED FROM: ANSI D

0 1 in

Path: \\sacramento\acad\Sites\Western Regional LF\CIVIL 3D\1420152_GCCS Expansion\Concept 2 (IFB Rev0\) | File Name: 1418421_Flare Foundation.dwg

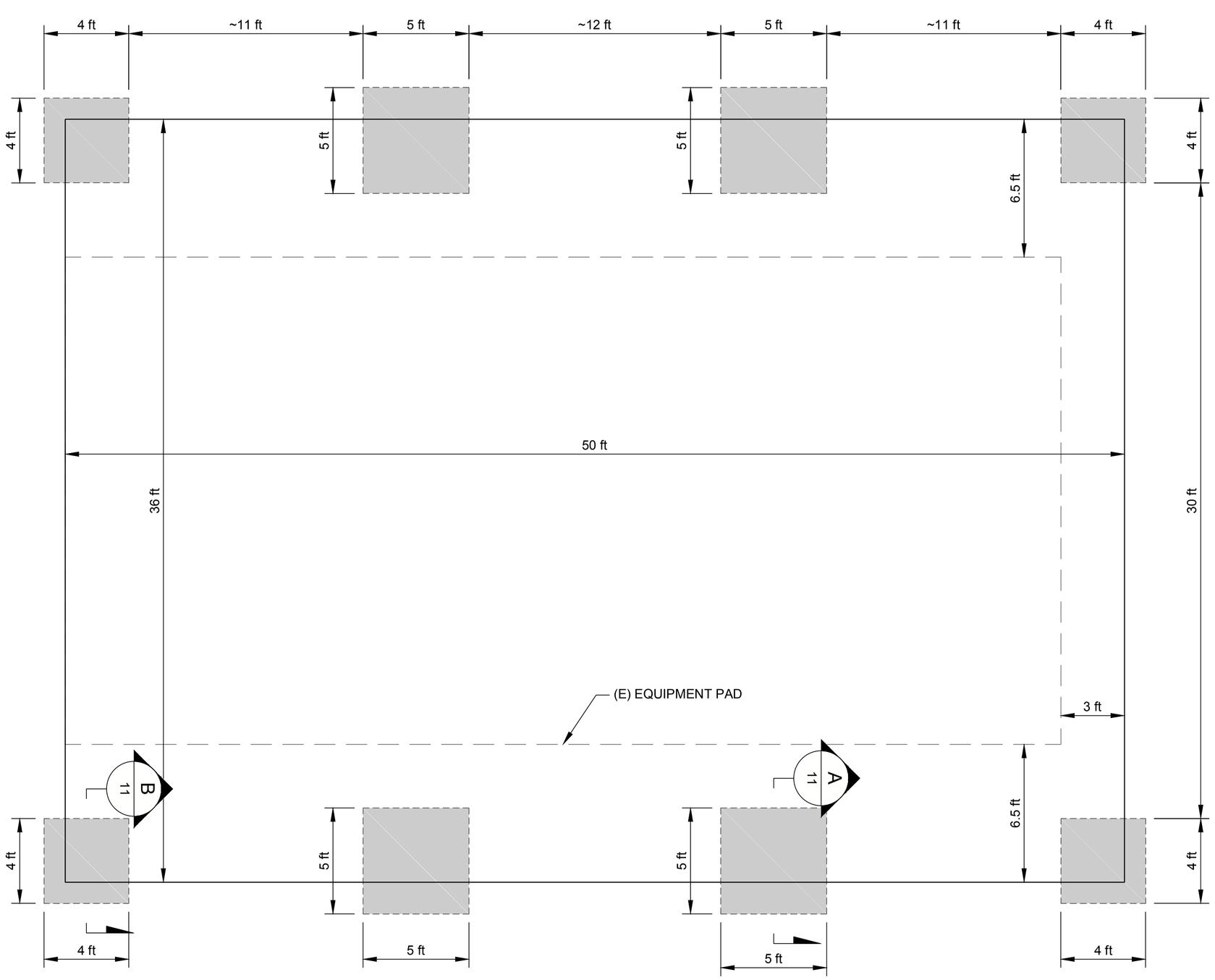

SCALE: 1"=4' 1/7|11 EQUIPMENT CANOPY FOUNDATION PLAN VIEW

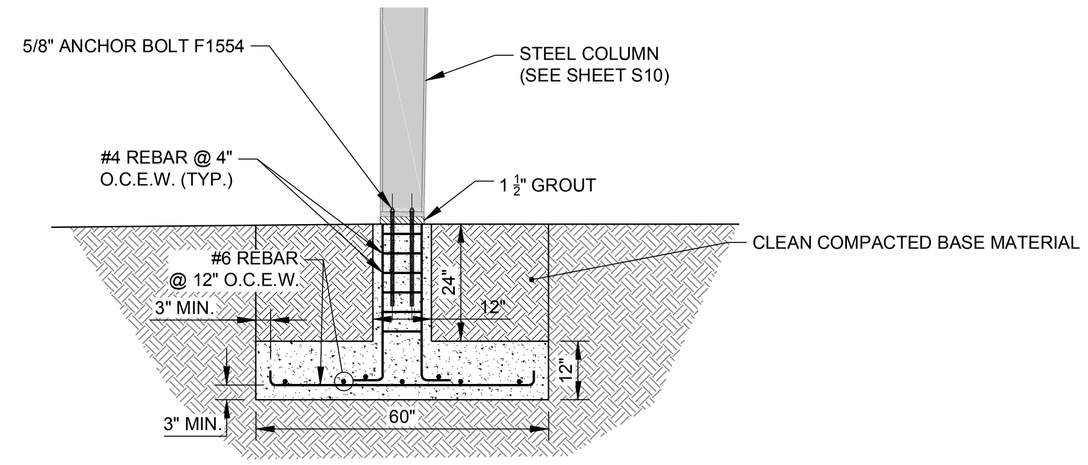

SCALE: 1"=2' A/11 SECTION A

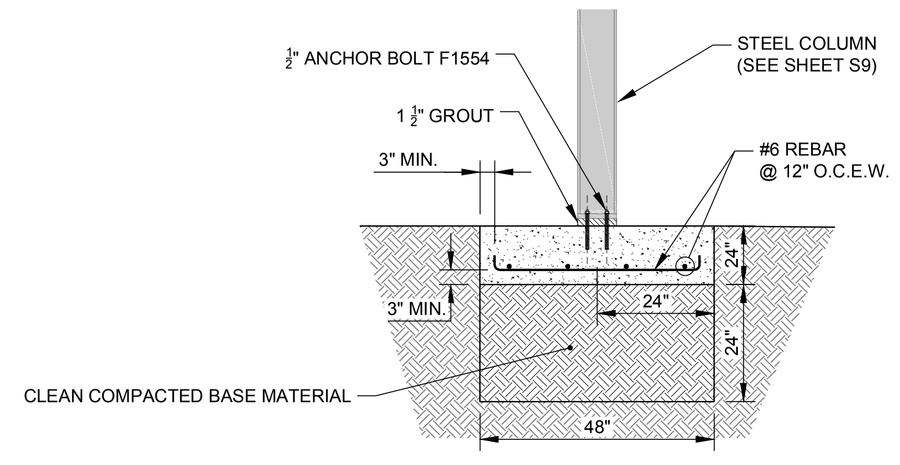

SCALE: 1"=2' B/11 SECTION B

THE PROJECT WAS ORIGINALLY DESIGNED AND BID AS A REPLACEMENT OF THE BLOWER/FLARE STATION THAT INCLUDED REUSING SEVERAL COMPONENTS OF THE EXISTING FACILITIES AND 240 VAC MAIN POWER SUPPLY. THE CURRENT PROJECT, BIDDING PROCESS AND BID FORM IS BASED ON UPGRADING THE FACILITY TO USE 480 VAC POWER, REUSING VERY FEW AND SELECTED FACILITIES, AND USING A REVISED LAYOUT SHOWN ON SHEET 7A. ANY REFERENCES TO NEW 240 VAC EQUIPMENT IN THE PLANS OR SPECIFICATIONS ARE INTENDED TO BE 480 VAC.

NOTE(S) (SEE GEOTECHNICAL NOTES ON SHEET 10)

1. CANOPY FOUNDATION LOCATIONS AND DIMENSIONS ARE ESTIMATES FOR BIDDING PURPOSES ONLY. FINAL LOCATIONS AND DIMENSIONS WILL BE PROVIDED FOR CONSTRUCTION, BASED ON CANOPY VENDOR FINAL CALCULATIONS AND DRAWINGS.

Rev.	YYYY-MM-DD	DESCRIPTION	PREPARED	DESIGN	REVIEW	APPROVED
0	2016-08-19	ISSUED FOR BIDDING	MAL	APW	APW	RVW

CLIENT
WESTERN PLACER WASTE MANAGEMENT AUTHORITY
3033 FIDDYMENT ROAD
ROSEVILLE, CA. 95747

CONSULTANT
GOLDER ASSOCIATES, INC.
425 LAKESIDE DRIVE
SUNNYVALE, CALIFORNIA 94085
USA
+[1] (408) 220-9223
www.golder.com

PROJECT
WESTERN REGIONAL SANITARY LANDFILL
2016 GCCS EXPANSION

TITLE
EQUIPMENT CANOPY FOUNDATION DETAILS (PRELIMINARY)

PROJECT No. 1420152 | Rev. 0 | 15 of 58 | DRAWING 11

IF THIS MEASUREMENT DOES NOT MATCH WHAT IS SHOWN, THE SHEET SIZE HAS BEEN MODIFIED FROM: ANSI D

Path: \\sacramento\acad\Sites\Western Regional LF\CIVIL 3D\1420152_GCCS Expansion\Concept 2 (IFB Rev0\) | File Name: 1418421_Flare Foundation.dwg

THE PROJECT WAS ORIGINALLY DESIGNED AND BID AS A REPLACEMENT OF THE BLOWER/FLARE STATION THAT INCLUDED REUSING SEVERAL COMPONENTS OF THE EXISTING FACILITIES AND 240 VAC MAIN POWER SUPPLY. THE CURRENT PROJECT, BIDDING PROCESS AND BID FORM IS BASED ON UPGRADING THE FACILITY TO USE 480 VAC POWER, REUSING VERY FEW AND SELECTED FACILITIES, AND USING A REVISED LAYOUT SHOWN ON SHEET 7A. ANY REFERENCES TO NEW 240 VAC EQUIPMENT IN THE PLANS OR SPECIFICATIONS ARE INTENDED TO BE 480 VAC.

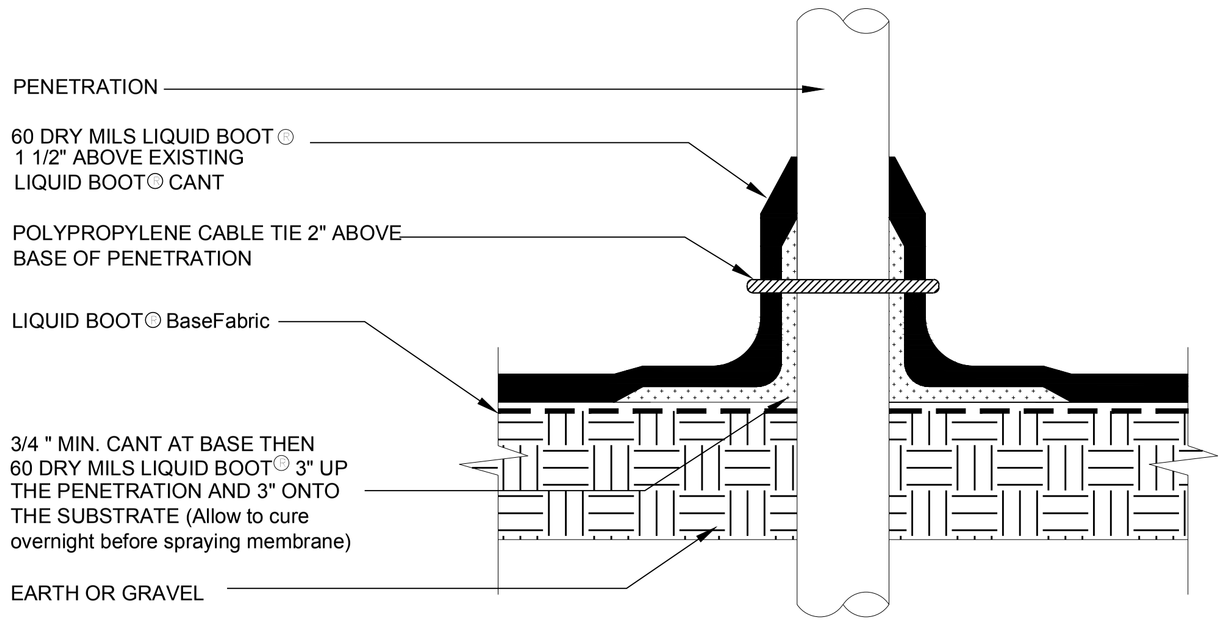

NOTE:
All penetrations shall be cleaned per specifications before LIQUID BOOTⒸ is applied.

SCALE: N.T.S. 1 (12|12) METHANE BARRIER PENETRATIONS ON EARTH OR GRAVEL SUBGRADE TYPICAL DETAIL

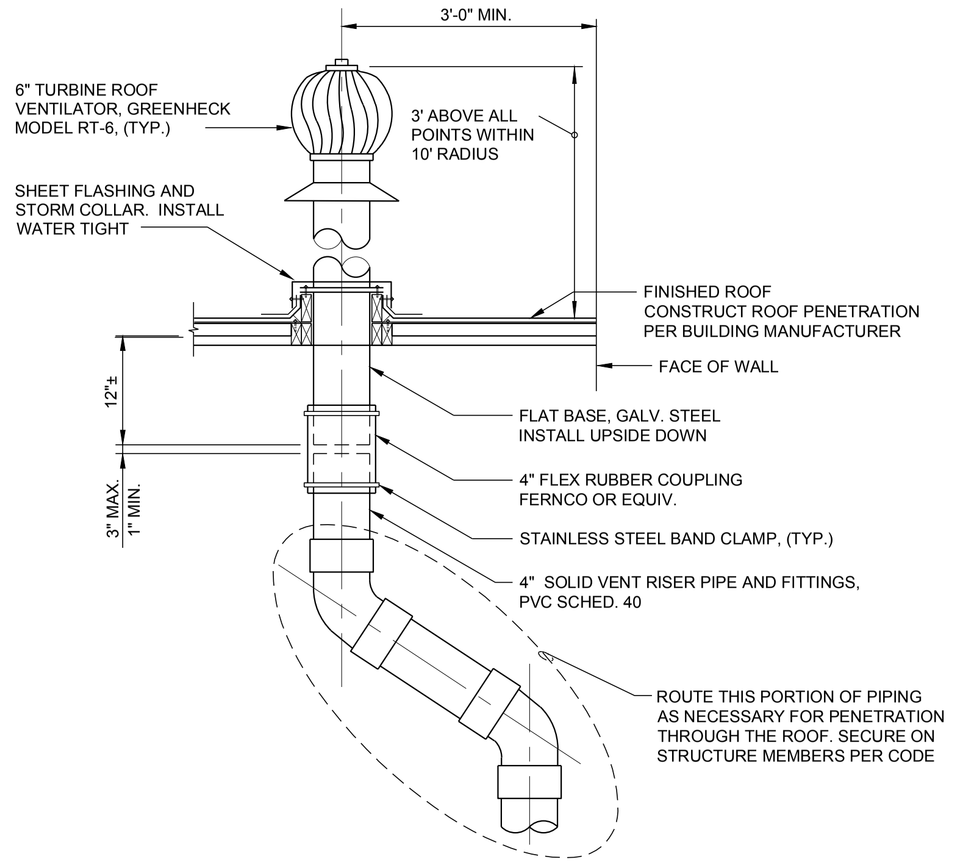

SCALE: N.T.S. 3 (7|12) VENT RISER PIPE ROOF PENETRATION (TYP.)

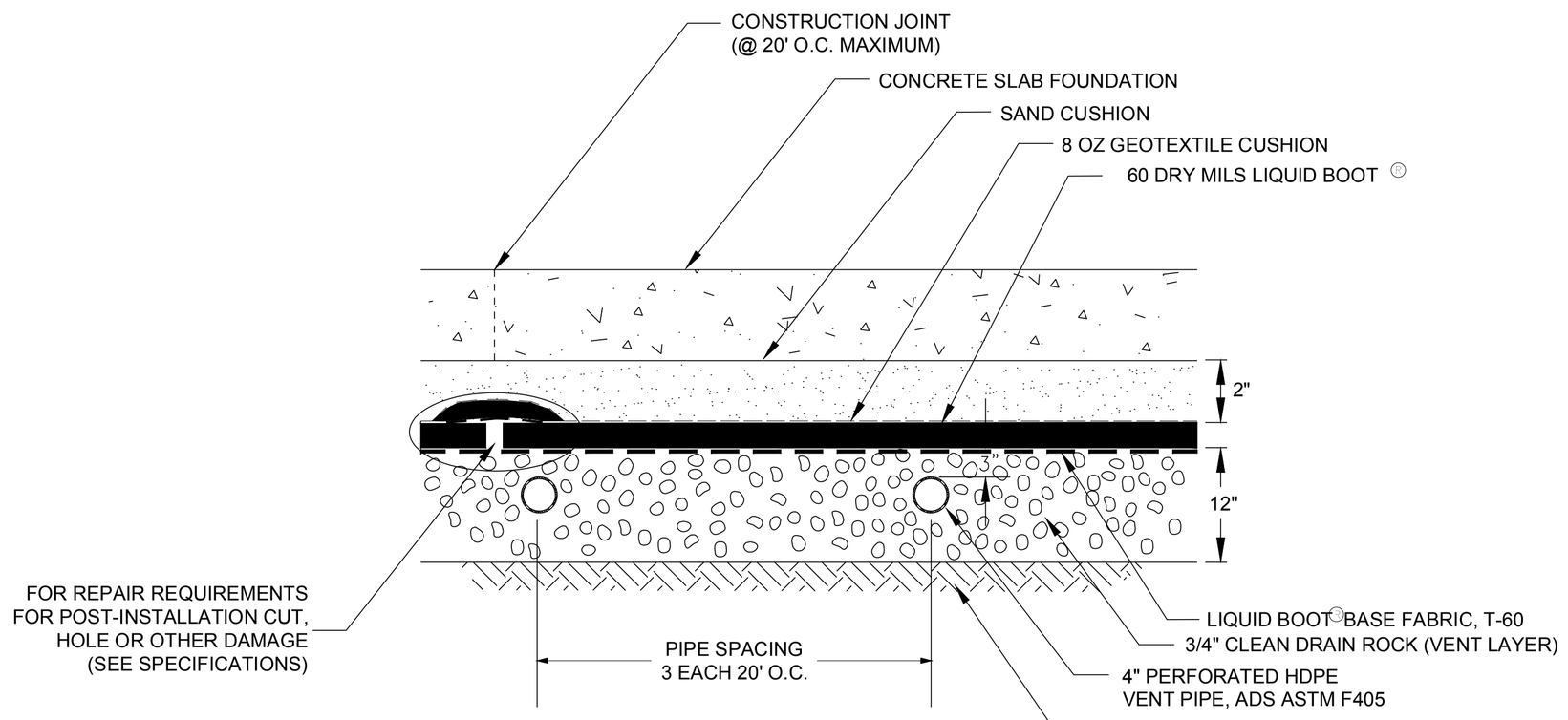

SCALE: N.T.S. 2 (7|12) METHANE BARRIER/ VENT SYSTEM TYPICAL SECTION

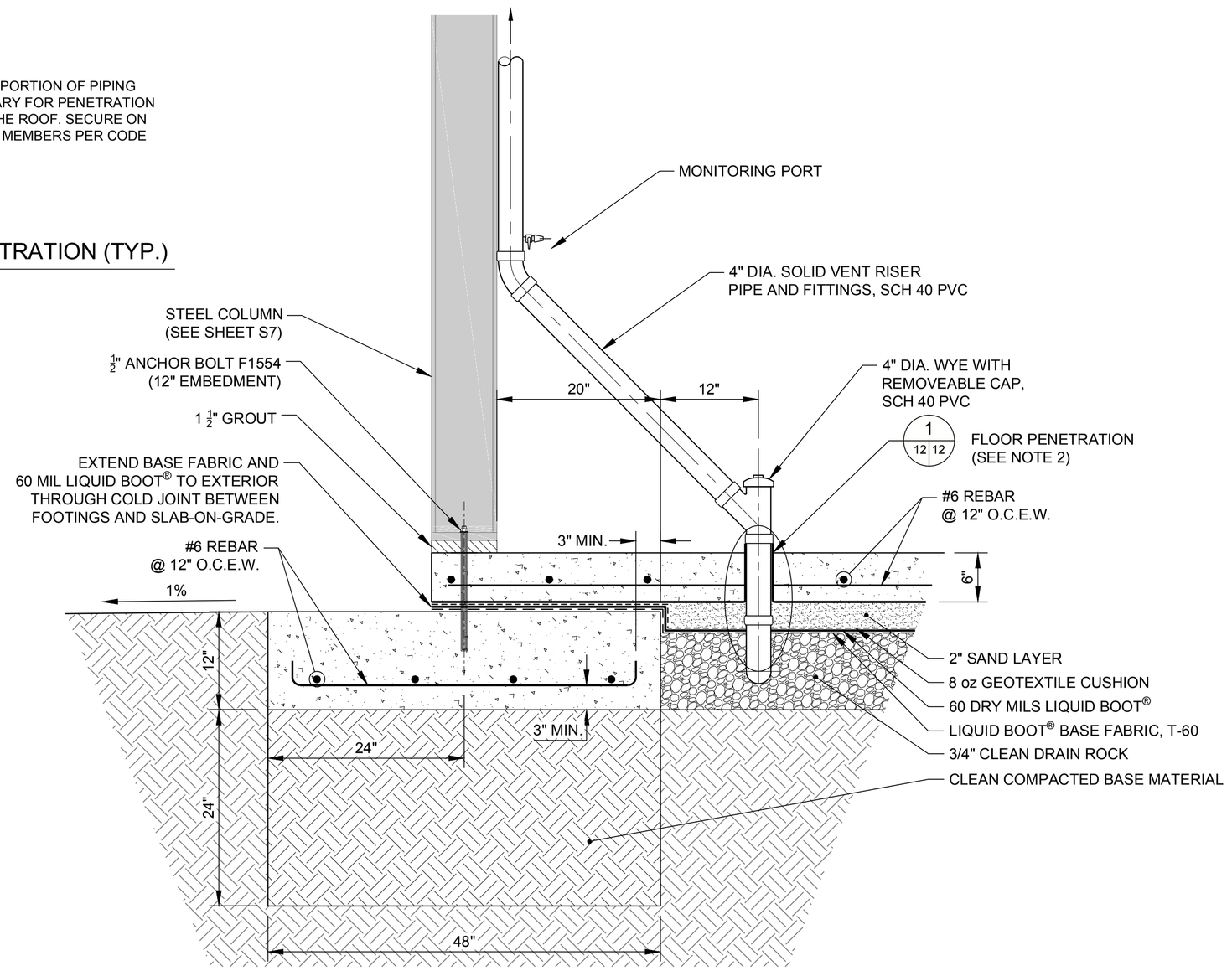

DETAIL NOTE(S)

1. STRUCTURAL ELEMENTS SHOWN ON THIS DRAWING ARE SCHEMATIC ONLY. SEE DRAWING 10 FOR SLAB-ON-GRADE AND STRUCTURAL FOUNDATION PLAN AND DETAILS.
2. PIPING SHOWN OFFSET TO INTERIOR FOR CLARITY. ALIGN SUBFLOOR RISER THROUGH PERIMETER FOOTING CLOSE TO FACE OF WALL. MAINTAIN 1.5" CLEAR TO CONCRETE REINFORCEMENT.

SCALE: N.T.S. 4 (7|12) VENT RISER PIPE AT FOOTING

Rev.	YYYY-MM-DD	DESCRIPTION	PREPARED	DESIGN	REVIEW	APPROVED
0	2016-08-19	ISSUED FOR BIDDING	MAL	APW	APW	RVW

CLIENT
WESTERN PLACER WASTE MANAGEMENT AUTHORITY
3033 FIDDYMENT ROAD
ROSEVILLE, CA. 95747

CONSULTANT
GOLDER ASSOCIATES, INC.
425 LAKESIDE DRIVE
SUNNYVALE, CALIFORNIA 94085
USA
+[1] (408) 220-9223
www.golder.com

PROJECT
WESTERN REGIONAL SANITARY LANDFILL
2016 GCCS EXPANSION

TITLE
METHANE PROTECTION DETAILS

PROJECT No. 1420152 | Rev. 0 | 16 of 58 | DRAWING 12

IF THIS MEASUREMENT DOES NOT MATCH WHAT IS SHOWN, THE SHEET SIZE HAS BEEN MODIFIED FROM: ANSI D

Path: \\sacramento\acad\Sites\Western Regional LF\CIVIL 3D\1420152_GCCS Expansion\Concept 2 (IFB Rev0)\ | File Name: 1418421_Flare Foundation.dwg

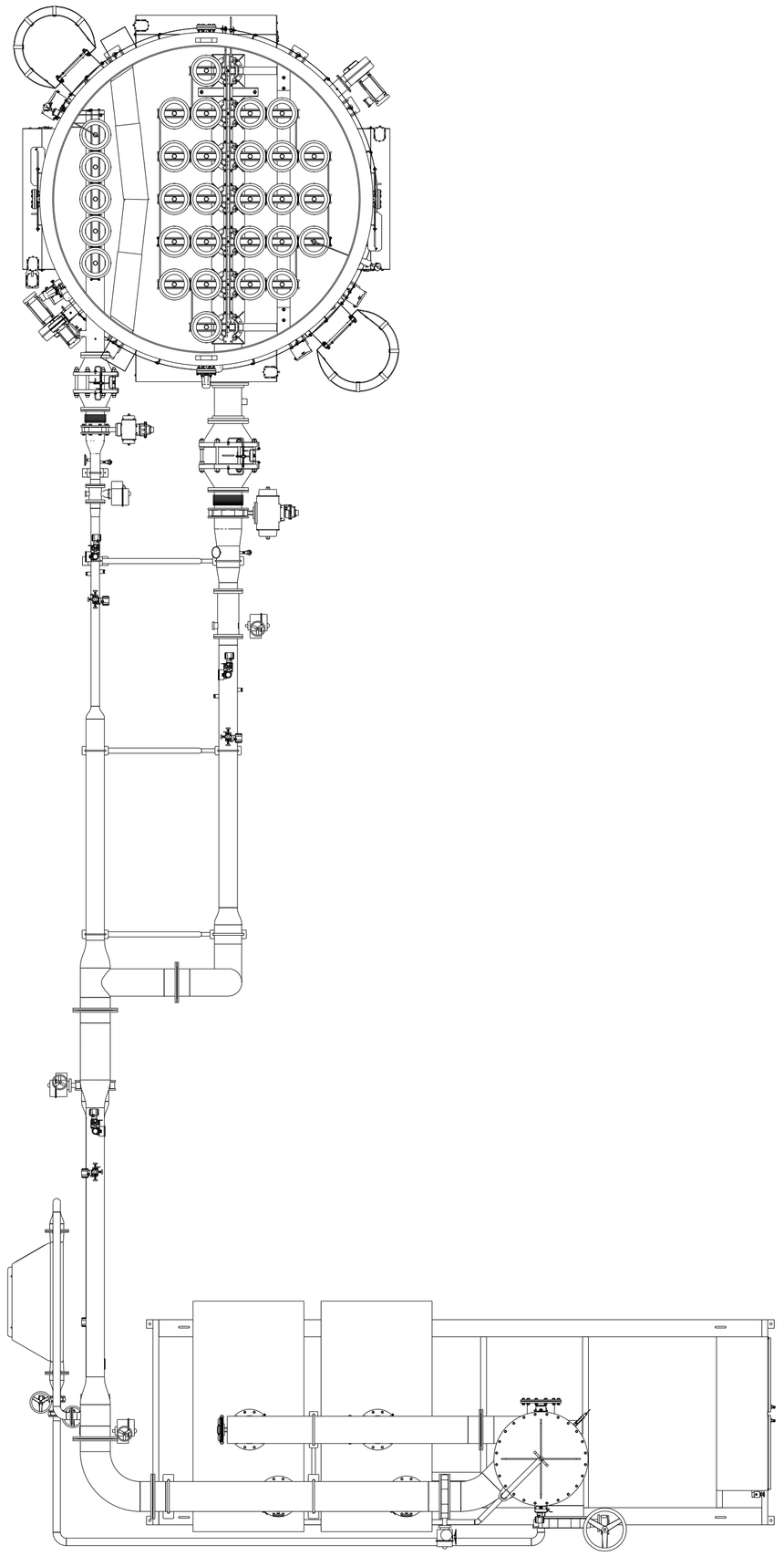

PLAN VIEW
NOT TO SCALE

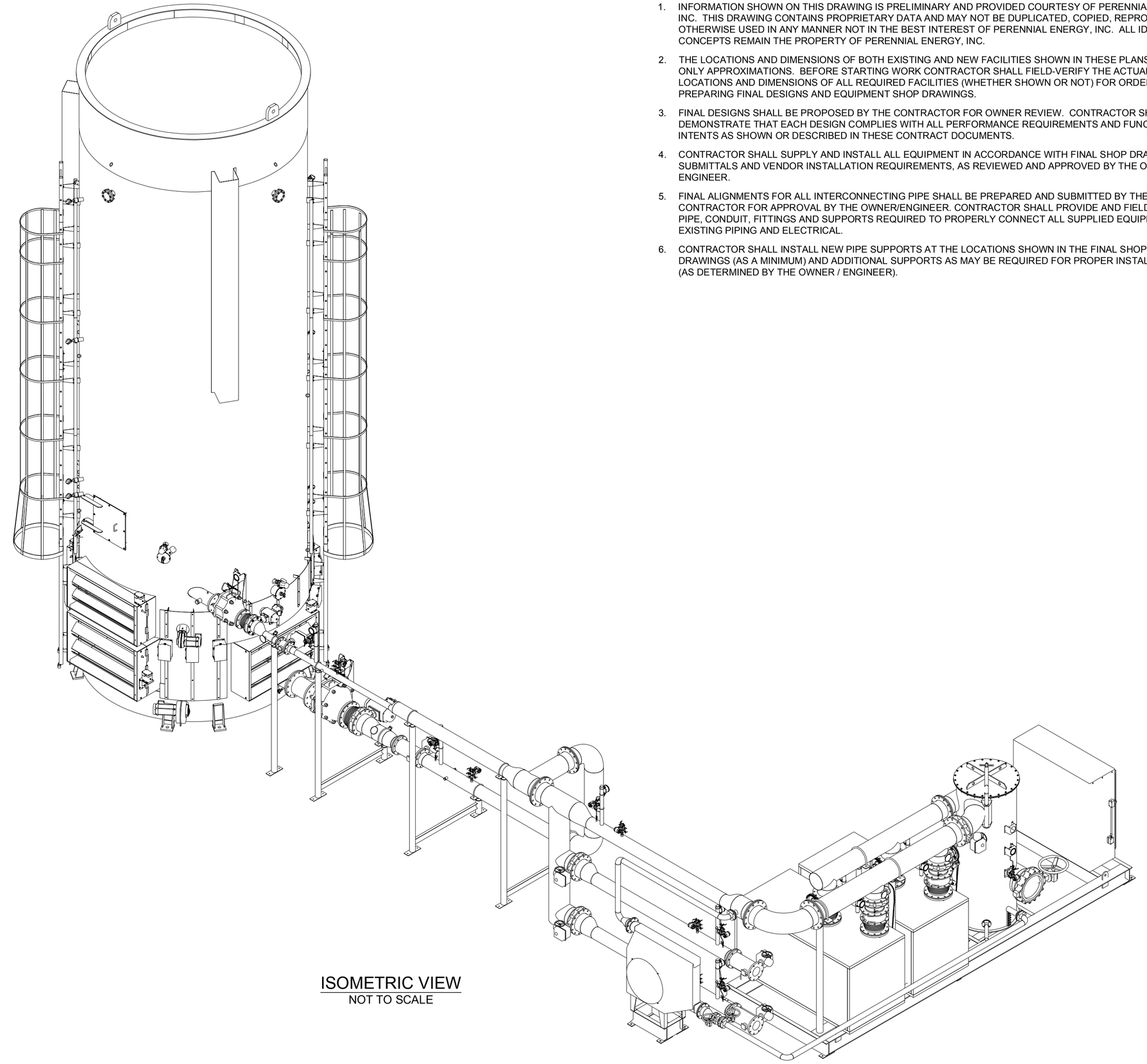

ISOMETRIC VIEW
NOT TO SCALE

NOTE(S)

1. INFORMATION SHOWN ON THIS DRAWING IS PRELIMINARY AND PROVIDED COURTESY OF PERENNIAL ENERGY, INC. THIS DRAWING CONTAINS PROPRIETARY DATA AND MAY NOT BE DUPLICATED, COPIED, REPRODUCED OR OTHERWISE USED IN ANY MANNER NOT IN THE BEST INTEREST OF PERENNIAL ENERGY, INC. ALL IDEAS AND CONCEPTS REMAIN THE PROPERTY OF PERENNIAL ENERGY, INC.
2. THE LOCATIONS AND DIMENSIONS OF BOTH EXISTING AND NEW FACILITIES SHOWN IN THESE PLANS ARE ONLY APPROXIMATIONS. BEFORE STARTING WORK CONTRACTOR SHALL FIELD-VERIFY THE ACTUAL LOCATIONS AND DIMENSIONS OF ALL REQUIRED FACILITIES (WHETHER SHOWN OR NOT) FOR ORDERING AND PREPARING FINAL DESIGNS AND EQUIPMENT SHOP DRAWINGS.
3. FINAL DESIGNS SHALL BE PROPOSED BY THE CONTRACTOR FOR OWNER REVIEW. CONTRACTOR SHALL DEMONSTRATE THAT EACH DESIGN COMPLIES WITH ALL PERFORMANCE REQUIREMENTS AND FUNCTIONAL INTENTS AS SHOWN OR DESCRIBED IN THESE CONTRACT DOCUMENTS.
4. CONTRACTOR SHALL SUPPLY AND INSTALL ALL EQUIPMENT IN ACCORDANCE WITH FINAL SHOP DRAWINGS, SUBMITTALS AND VENDOR INSTALLATION REQUIREMENTS, AS REVIEWED AND APPROVED BY THE OWNER / ENGINEER.
5. FINAL ALIGNMENTS FOR ALL INTERCONNECTING PIPE SHALL BE PREPARED AND SUBMITTED BY THE CONTRACTOR FOR APPROVAL BY THE OWNER/ENGINEER. CONTRACTOR SHALL PROVIDE AND FIELD-FIT ALL PIPE, CONDUIT, FITTINGS AND SUPPORTS REQUIRED TO PROPERLY CONNECT ALL SUPPLIED EQUIPMENT TO EXISTING PIPING AND ELECTRICAL.
6. CONTRACTOR SHALL INSTALL NEW PIPE SUPPORTS AT THE LOCATIONS SHOWN IN THE FINAL SHOP DRAWINGS (AS A MINIMUM) AND ADDITIONAL SUPPORTS AS MAY BE REQUIRED FOR PROPER INSTALLATION (AS DETERMINED BY THE OWNER / ENGINEER).

THE PROJECT WAS ORIGINALLY DESIGNED AND BID AS A REPLACEMENT OF THE BLOWER/FLARE STATION THAT INCLUDED REUSING SEVERAL COMPONENTS OF THE EXISTING FACILITIES AND 240 VAC MAIN POWER SUPPLY. THE CURRENT PROJECT, BIDDING PROCESS AND BID FORM IS BASED ON UPGRADING THE FACILITY TO USE 480 VAC POWER, REUSING VERY FEW AND SELECTED FACILITIES, AND USING A REVISED LAYOUT SHOWN ON SHEET 7A. ANY REFERENCES TO NEW 240 VAC EQUIPMENT IN THE PLANS OR SPECIFICATIONS ARE INTENDED TO BE 480 VAC.

Rev.	YYYY-MM-DD	DESCRIPTION	PREPARED	DESIGN	REVIEW	APPROVED
0	2016-08-19	ISSUED FOR BIDDING	MAL	PEI	APW	RVW

CLIENT
WESTERN REGIONAL WASTE MANAGEMENT AUTHORITY
3033 FIDDYMENT ROAD
ROSEVILLE, CA. 95747

CONSULTANT
GOLDER ASSOCIATES, INC.
425 LAKESIDE DRIVE
SUNNYVALE, CALIFORNIA 94085
USA
+[1] (408) 220-9223
www.golder.com

PROJECT
WESTERN REGIONAL SANITARY LANDFILL
2016 GCCS EXPANSION

TITLE
BLOWER-FLARE EQUIPMENT TOP ASSEMBLY

PROJECT No. 1420152
Rev. 0

DRAWING 14A

IF THIS MEASUREMENT DOES NOT MATCH WHAT IS SHOWN, THE SHEET SIZE HAS BEEN MODIFIED FROM: ANSI D

0 1 in

Path: \\sacramento\acad\Sites\Western Regional LF\CIVIL 3D\1420152_GCCS Expansion\Concept 2 (IFB Rev0) | File Name: 1420152-06_Perennial Drawings (Rev0).dwg

Parts Reference Designators

Location Designators

Ref Des	Location
ACS	Air Compressor Skid
CDS	Condensate Destruction System
CDGS	Cogeneration Skid
CP	Control Panel
CST	Condensate Storage Tank
EG	Engine Generator
FLR	Flare
GAC	Gas Analysis Cabinet
GCS	Gas Compression Skid
GHS	Gas Handling Skid
ITC	Ignition Transformer Cabinet
MCC	Motor Control Center
MISC	Loose Parts
PCS	Precooler Skid
PIP	Piping Not On Skid

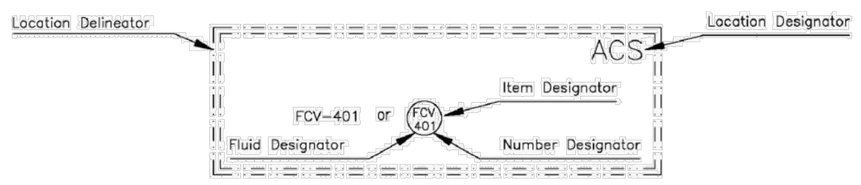

If the Reference Designator is in a bubble, then the item will be listed on that drawing's material list.
If the Reference Designator is not in a bubble, then it is referring to an item listed on another drawing's material list or it is supplied as an integral part of another item called out by a bubbled reference designator.

Fluid Designators

Ref Des	Fluid
1XX	Fossil Fuels
2XX	Oils
3XX	Biogas
4XX	Air
5XX	Combustion Exhaust
6XX	Coolants
7XX	Condensate
8XX	Inert Gases
9XX	Digester Fluids

Item Designators

Ref Des	Reference Item	Typical Usage/Description
AC	Air Conditioner	Air Conditioner
ACF	Activated Carbon Filter	Condensate Tank Vent Filter
AD	Auto Dialer	Auto Dialer
AI	Analog Input	PLC Analog Input Module
AIO	Analog Input Output	PLC Analog Input Output Module
AO	Analog Output	PLC Analog Output Module
AP	Analysis Port	Gas Sample Ports
BALL	Burner Alarm Low Low	Flame Fail Shutdown
BE	Burner Element	UV Sensor
BG	Burner Glass	View Ports
BLR	Blower	Air or Gas Blower
BN	Burner	Boiler, Hot Water Heater
BS	Burner Switch	Flame Recognition Switch
CBL	Cable	Cables, Specialty Wiring Between Devices
CGT	Combustible Gas Transmitter	LEL Transmitter
CHR	Chart Recorder	Paper or Paperless Chart Recorder
CMP	Compressor	Air or Gas Compressor
D	Diode	Diode
DI	Digital Input	PLC Digital Input Module
EDP	Electrical Distribution Panel	Load Centers, Breaker Panels
E/E	Voltage Transformer	Electrical Transformers, Power Supplies
EI	Voltage Indicator	System Voltage Monitoring
ES	Exhaust Silencer	Muffler
FAH	Flow Alarm High	High Flow Alarm
FAHH	Flow Alarm High High	High Flow Shutdown
FAL	Flow Alarm Low	Low Flow Alarm
FALL	Flow Alarm Low Low	Low Flow Shutdown
FC	Flow Controller	PID Loop Flow Controller, Burner Plug
FCV	Flow Control Valve	Actuated or Hand Modulating Valves, Dampers
FD	Fused Disconnect	Fused Disconnect
FE	Flow Element	Pitot Tube, Hot Wire Anemometer, Orifice Plate
FI	Flow Indicator	Flow Rate Gauge
FIR	Flow Indicating Recorder	Paper or Paperless Chart Recorder
FLT	Filter	Liquid or Gas Filter
FLTP	Port Filter	Unused Port Filter
FO	Flow Orifice	Flow Alarms
FQI	Flow Totalization Indicator	Chart Recorder
FSV	Flow Safety Valve	Check Valve
FT	Flow Transmitter	Flow Transmitter
FU	Fuse	Fuse
FUH	Fuse Holder	Fuse Holder
FV	Flow Valve	Open or Closed Valve not Modulating, Solenoid Valve, Shutdown Valve
FX	Flex	Expansion and Vibration Isolators, Hoses
GBK	Ground Block	Ground Block
HS	Hand Switch	Hand Operated Electrical Switches and Pushbuttons
HT	Heat Trace	Heat Trace
HTR	Heater	Electrical Heaters
HV	Hand Valve	Open or Closed Hand Operated Valve
HVP	Hand Valve Port	Gauge, Manometer and Sample Ports
I/I	Current Transformer	Alternating Current to Current Transformer
IAH	Current Alarm High	High Current Alarm
IAHH	Current Alarm High High	High Current Shutdown, Blower Overload
IAL	Current Alarm Low	Low Current Alarm, Blower Surge Alarm
IALL	Current Alarm Low Low	Low Current Shutdown, Blower Surge Shutdown
IGN	Ignitor	Spark Plugs, Spark Ignitors
II	Current Indicator	Motor Current
IIR	Current Indicating Recorder	Paper or Paperless Chart Recorder
IT	Current Transmitter	Current Transmitter
ITC	Ignitor Transformer Cabinet	Flare Ignitor
JB-HV	Junction Box-High Voltage	Interconnection Wiring
JB-LV	Junction Box-Low Voltage	Interconnection Wiring
KI	Time Indicator	Hour Meter
LAH	Level Alarm High	High Liquid Level Alarm
LAHH	Level Alarm High High	High Liquid Level Shutdown
LAL	Level Alarm Low	Low Liquid Level Alarm
LALL	Level Alarm Low Low	Low Liquid Level Shutdown
LC	Level Controller	Liquid Level Controller, Drip Trap
LCH	Level Control High	Condensate Pump Control
LCL	Level Control Low	Condensate Pump Control
LE	Level Element	Liquid Level Measuring Element, Capacitance Probe
LI	Level Indicator	Condensate Measurement
LMP	Lamp	Lights, Lamps, Beacons
LS	Level Switch	Liquid Level Switch
LT	Level Transmitter	Liquid Level Measuring Transmitter
LUB	Air Lubricator	Air Lubricator
LZ	Level controller	Air Vent
MAL	Methane Alarm Low	Low Methane Level Alarm
MALL	Methane Alarm Low Low	Low Methane Level Shutdown
MI	Methane Indicator	Methane Level Gauge
MIR	Methane Indicating Recorder	Paper or Paperless Chart Recorder
MOD	Modem	Modem
MV	Mixer Valve	Engine Carburetor
NBK	Neutral Block	Neutral Block
OAH	Oxygen Alarm High	High Oxygen Level Alarm
OAHH	Oxygen Alarm High High	High Oxygen Level shutdown
OE	Oxygen Element	Oxygen Sensor
OI	Oxygen Indicator	Oxygen Level Gauge
OIR	Oxygen Indicating Recorder	Paper or Paperless Chart Recorder
OT	Oxygen Transmitter	Oxygen Level Transmitter
PAH	Pressure Alarm High	High Pressure Alarm
PAHH	Pressure Alarm High High	High Pressure Shutdown
PAL	Pressure Alarm Low	Low Pressure Alarm
PALL	Pressure Alarm Low Low	Low Pressure Shutdown
PC	Pressure Controller	PID Loop Pressure Controller, Valve Operator Logic
PCV	Pressure Control Valve	Regulators, Actuated or Hand Modulating Valves
PDI	Pressure Differential Indicator	Differential Pressure Gauge
PDT	Pressure Differential Transmitter	DP Flow Meter
PH	Phone	Phone
PI	Pressure Indicator	Pressure Gauge
PIA	Pressure Indicator & Alarm	Pressure Gauge w/Switch
PIR	Pressure Indicating Recorder	Paper or Paperless Chart Recorder
PLC	Programmable Logic Controller	Programmable Logic Controller
PLT	Pilot	Pilot Mixing Assembly
PMP	Pump	Liquid Pump
PR	Pressure Recorder	Paper or Paperless Recorder
PS	Pressure Switch	Pressure Switch
PSE	Pressure Safety Element	Rupture Disk
PT	Pressure Transmitter	Pressure Transmitter
R	Relay	Control Relay
RCP	Receptacle	Electrical Receptacle
RES	Resistor	Resistor
RM	Relay Module	PLC Relay Module
SGN	Sign	Sign
SI	Speed Indicator	Speed or Frequency Meter
SSR	Surge Arrestor	Surge Protectors, Lightning Arrestors
TAH	Temperature Alarm High	High Temperature Alarm
TAHH	Temperature Alarm High High	High Temperature Shutdown
TAL	Temperature Alarm Low	Low Temperature Alarm
TALL	Temperature Alarm Low Low	Low Temperature Shutdown
TB	Terminal Block	Terminal Block
TC	Temperature Controller	Thermostat
TCV	Temperature Control Valve	Control Valves
TE	Temperature Element	Thermocouple, RTD, Thermister
TES	Temperature Element Switch	Thermocouple Switch
TEV	Thermostatic Expansion Valve	Thermostatic Expansion Valve
TEW	Temperature Element Well	Port for Thermocouple, RTD or Thermister
TI	Temperature Indicator	Temperature Gauge
TIA	Temperature Indicator & Alarm	Temperature Gauge w/Switch
TIR	Temperature Indicator Recorder	Paper or Paperless Chart Recorder
TK	Tank	Propane Tank, Condensate Storage Tank
TSE	Temperature Safety Element	Flame Arrestor, Flame Check
TSV	Temperature Safety Valve	Valved Fusible Link
TT	Temperature Transmitter	Temperature Transmitter
TX	Heat Exchanger	Heat Exchanger
UPS	Uninterruptable Power Supply	Uninterruptable Power Supply
VAH	Vibration Alarm High	High Vibration Alarm
VAHH	Vibration Alarm High High	High Vibration Shutdown
VFD	Variable Frequency Drive	Variable Frequency Drive
VI	Vibration Indicator	Vibration Gauge
VIR	Vibration Indicating Recorder	Paper or Paperless Chart Recorder
VT	Vibration Transmitter	Vibration Transmitter
YASD	Event Alarm	VFD Faults
YI	Event Indicator	Run Lamps
YIC	Event Indicator Controller	Touch Screens, Setpoint/Display Panels, VFD Keypads, UV Sensor Interface Panels
ZA	Position Alarm	Valve Fail To Open, Close
ZC	Position Controller	PID Loop Position Controller
ZI	Position Indicator	Valve or Damper Position Indicator
ZS	Position Switch	Valve Open, Close Switches

This Drawing Contains Proprietary Data Provided by Perennial Energy LLC and is Used With Permission. This Drawing and Data May Not Be Duplicated, Copied, Reproduced or Otherwise Used In Any Manner Not in the Best Interest of Perennial Energy LLC. All Ideas and Concepts Remain the Property of Perennial Energy LLC.

THE PROJECT WAS ORIGINALLY DESIGNED AND BID AS A REPLACEMENT OF THE BLOWER/FLARE STATION THAT INCLUDED REUSING SEVERAL COMPONENTS OF THE EXISTING FACILITIES AND 240 VAC MAIN POWER SUPPLY. THE CURRENT PROJECT, BIDDING PROCESS AND BID FORM IS BASED ON UPGRADING THE FACILITY TO USE 480 VAC POWER, REUSING VERY FEW AND SELECTED FACILITIES, AND USING A REVISED LAYOUT SHOWN ON SHEET 7A. ANY REFERENCES TO NEW 240 VAC EQUIPMENT IN THE PLANS OR SPECIFICATIONS ARE INTENDED TO BE 480 VAC.

Rev.	YYYY-MM-DD	DESCRIPTION	PREPARED	DESIGN	REVIEW	APPROVED
0	2016-08-19	ISSUED FOR BIDDING	MAL	APW	APW	RVW

CLIENT
WESTERN PLACER WASTE MANAGEMENT AUTHORITY
3033 FIDDYMENT ROAD
ROSEVILLE, CA. 95747

CONSULTANT
GOLDER ASSOCIATES, INC.
425 LAKESIDE DRIVE
SUNNYVALE, CALIFORNIA 94085
USA
+[1] (408) 220-9223
www.golder.com

PROJECT
WESTERN REGIONAL SANITARY LANDFILL
2016 GCCS EXPANSION

TITLE
BLOWER/ FLARE EQUIPMENT P&ID LEGEND

PROJECT No. 1420152 | Rev. 0 | | DRAWING 15

IF THIS MEASUREMENT DOES NOT MATCH WHAT IS SHOWN, THE SHEET SIZE HAS BEEN MODIFIED FROM: ANSI D

0 1 in

Path: \\sacramento\acad\Sites\Western Regional LF\CIVIL 3D\1420152_GCCS Expansion\Concept 2 (IFB Rev0)\ | File Name: 1420152-06_Perennial Drawings [Rev B].dwg

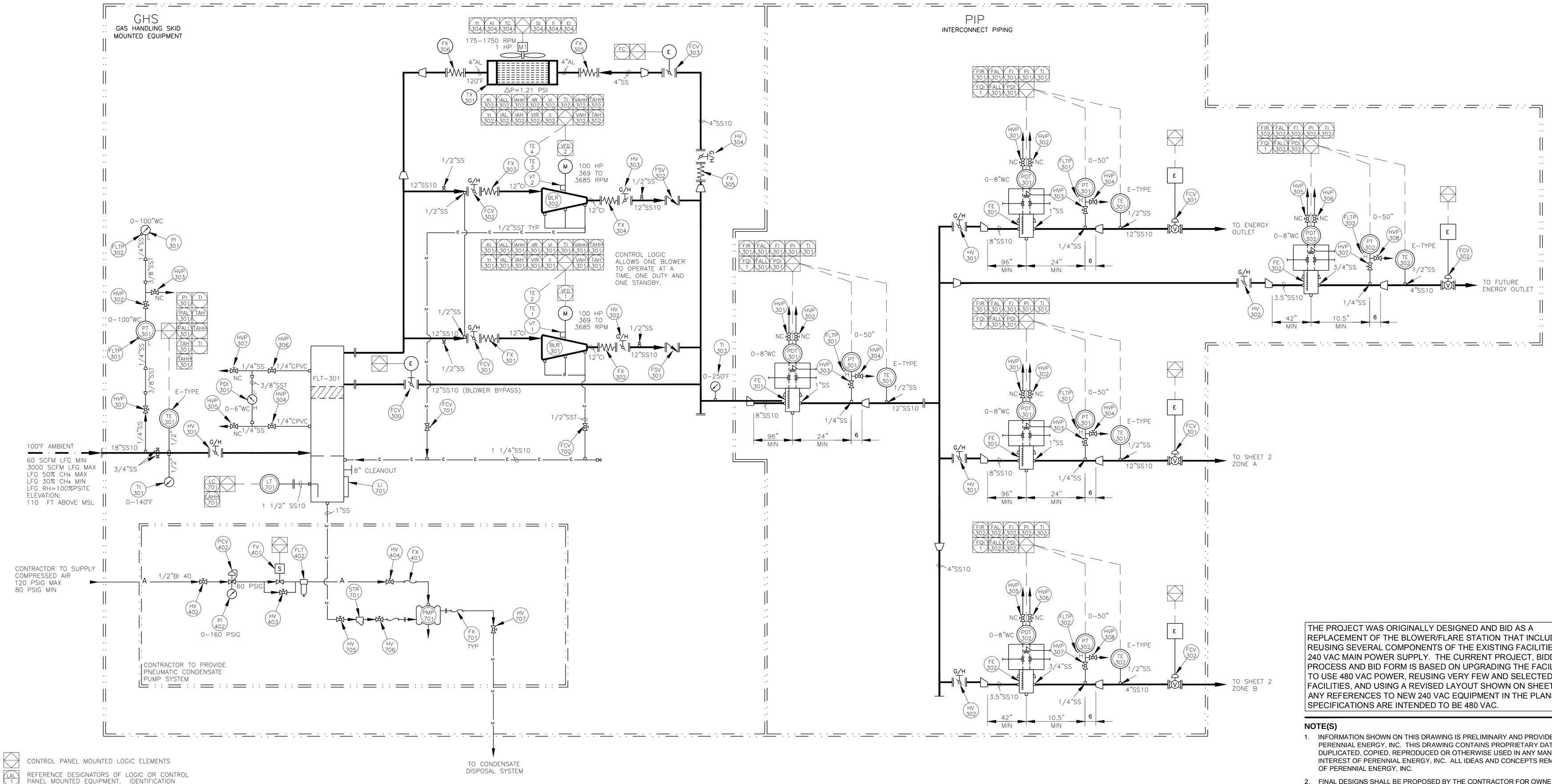

CONTROL PANEL MOUNTED LOGIC ELEMENTS

REFERENCE DESIGNATORS OF LOGIC OR CONTROL PANEL MOUNTED EQUIPMENT. IDENTIFICATION LETTERS CONFORM TO ISA'S INSTRUMENTATION SYMBOLS AND IDENTIFICATION MANUAL TABLE #1

PIPING MATERIALS LEGEND

AL: ALUMINUM	10: SCH 10 PIPE
BI: BLACK IRON	40: SCH 40 PIPE
CI: CAST IRON	80: SCH 80 PIPE
CPVC: CHLORO POLYVINYL CHLORIDE	H: I.D. HOSE
CS: CARBON STEEL	T: O.D. TUBING
EPDM: ETHYLENE PROPYLENE DIENE MONOMER	
FB: FIBERGLASS	
GS: GALVANIZED STEEL	
HDPE: HIGH DENSITY POLYETHYLENE	
SS: STAINLESS STEEL	
PVC: POLYVINYL CHLORIDE	

(EXAMPLE: 6"AL40 = 6" ALUMINUM SCHEDULE 40 PIPE)

P&ID LINES LEGEND

- ELECTRICAL CONNECTIONS
- INSULATION
- MAIN PIPING
- SUB PIPING
- CONDENSATE PIPING
- COMPRESSED AIR PIPING
- CUSTOMER SUPPLIED PIPING
- PEI SCOPE OF PROJECT

PID LOOPS

LOOP #	NAME	CONTROLLED ELEMENT	CONTROLLER, OUTPUT ELEMENT	PROCESS VARIABLE, UNITS	PV SENSOR
1	LANDFILL VACUUM CONTROL	FCV-301,2	PLC, AO1-CH?	LANDFILL VACUUM, 0.0 INWC	PT-301
2	LANDFILL FLOW CONTROL	FCV-301,2	PLC, AO1-CH?	LFG FLOWRATE, SCFM	TOTAL MASS FLOW
3	FLARE ZONE A TEMPERATURE CONTROL	FCV-401,2	PLC, AO1-CH?	FLARE ZONE A TEMPERATURE, °F	SELECTED FLARE ZONE A THERMOCOUPLE
4	FLARE ZONE B TEMPERATURE CONTROL	FCV-403,4,5,6	PLC, AO1-CH?	FLARE ZONE B TEMPERATURE, °F	SELECTED FLARE ZONE B THERMOCOUPLE

THE PROJECT WAS ORIGINALLY DESIGNED AND BID AS A REPLACEMENT OF THE BLOWER/FLARE STATION THAT INCLUDED REUSING SEVERAL COMPONENTS OF THE EXISTING FACILITIES AND 240 VAC MAIN POWER SUPPLY. THE CURRENT PROJECT, BIDDING PROCESS AND BID FORM IS BASED ON UPGRADING THE FACILITY TO USE 480 VAC POWER, REUSING VERY FEW AND SELECTED FACILITIES, AND USING A REVISED LAYOUT SHOWN ON SHEET 7A. ANY REFERENCES TO NEW 240 VAC EQUIPMENT IN THE PLANS OR SPECIFICATIONS ARE INTENDED TO BE 480 VAC.

NOTE(S)

1. INFORMATION SHOWN ON THIS DRAWING IS PRELIMINARY AND PROVIDED COURTESY OF PERENNIAL ENERGY, INC. THIS DRAWING CONTAINS PROPRIETARY DATA AND MAY NOT BE DUPLICATED, COPIED, REPRODUCED OR OTHERWISE USED IN ANY MANNER NOT IN THE BEST INTEREST OF PERENNIAL ENERGY, INC. ALL IDEAS AND CONCEPTS REMAIN THE PROPERTY OF PERENNIAL ENERGY, INC.
2. FINAL DESIGNS SHALL BE PROPOSED BY THE CONTRACTOR FOR OWNER REVIEW. CONTRACTOR SHALL DEMONSTRATE THAT EACH DESIGN COMPLIES WITH ALL PERFORMANCE REQUIREMENTS AND FUNCTIONAL INTENTS AS SHOWN OR DESCRIBED IN THESE CONTRACT DOCUMENTS.
3. CONTRACTOR SHALL SUPPLY AND INSTALL ALL EQUIPMENT IN ACCORDANCE WITH FINAL SHOP DRAWINGS, SUBMITTALS AND VENDOR INSTALLATION REQUIREMENTS, AS REVIEWED AND APPROVED BY THE OWNER / ENGINEER.
4. CONTRACTOR SHALL INTEGRATE NEW EQUIPMENT CONTROLS AND DATA OUTPUT WITH EXISTING SCADA SYSTEM, NEW SCADA SYSTEM AND BACK-UP DATA RECORDER AS DESCRIBED IN THESE CONTRACT DOCUMENTS. SEE TECHNICAL SPECIFICATIONS FOR SUMMARY OF SYSTEMS CONTROL LOGIC AND CONTROLS INTEGRATION REQUIREMENTS.
5. CONTRACTOR SHALL PROVIDE AND COORDINATE SCADA PROGRAMMING, INCLUDING PROVIDING HUMAN MACHINE INTERFACE (HMI) FOR REMOTE INTERNET AND MOBILE ACCESS TO SYSTEM FOR TRANSFERRING MONITORING DATA, VIEWING EQUIPMENT AND PROCESS STATUS, AND MAKING PROCESS ADJUSTMENTS.

Rev.	YYYY-MM-DD	DESCRIPTION	PREPARED	DESIGN	REVIEW	APPROVED
0	2016-08-19	ISSUED FOR BIDDING	MAL	APW	APW	RVW

CLIENT
WESTERN PLACER WASTE MANAGEMENT AUTHORITY
3033 FIDDYMENT ROAD
ROSEVILLE, CA. 95747

CONSULTANT
GOLDER ASSOCIATES, INC.
425 LAKESIDE DRIVE
SUNNYVALE, CALIFORNIA 94085
USA
+[1] (408) 220-9223
www.golder.com

PROJECT
WESTERN REGIONAL SANITARY LANDFILL
2016 GCCS EXPANSION

TITLE
BLOWER/ FLARE CONCEPTUAL EQUIPMENT P&ID (1 OF 2)

PROJECT No. 1420152 | Rev. 0 | 22 of 58 | DRAWING 16A

IF THIS MEASUREMENT DOES NOT MATCH WHAT IS SHOWN, THE SHEET SIZE HAS BEEN MODIFIED FROM: ANSI D

Path: \\sacramento\acad\Sites\Western Regional LF\CIVIL 3D\1420152_GCCS Expansion\Concept 2 (IIFB Rev0)\ | File Name: 1420152-06_Perennial Drawings (Rev0).dwg

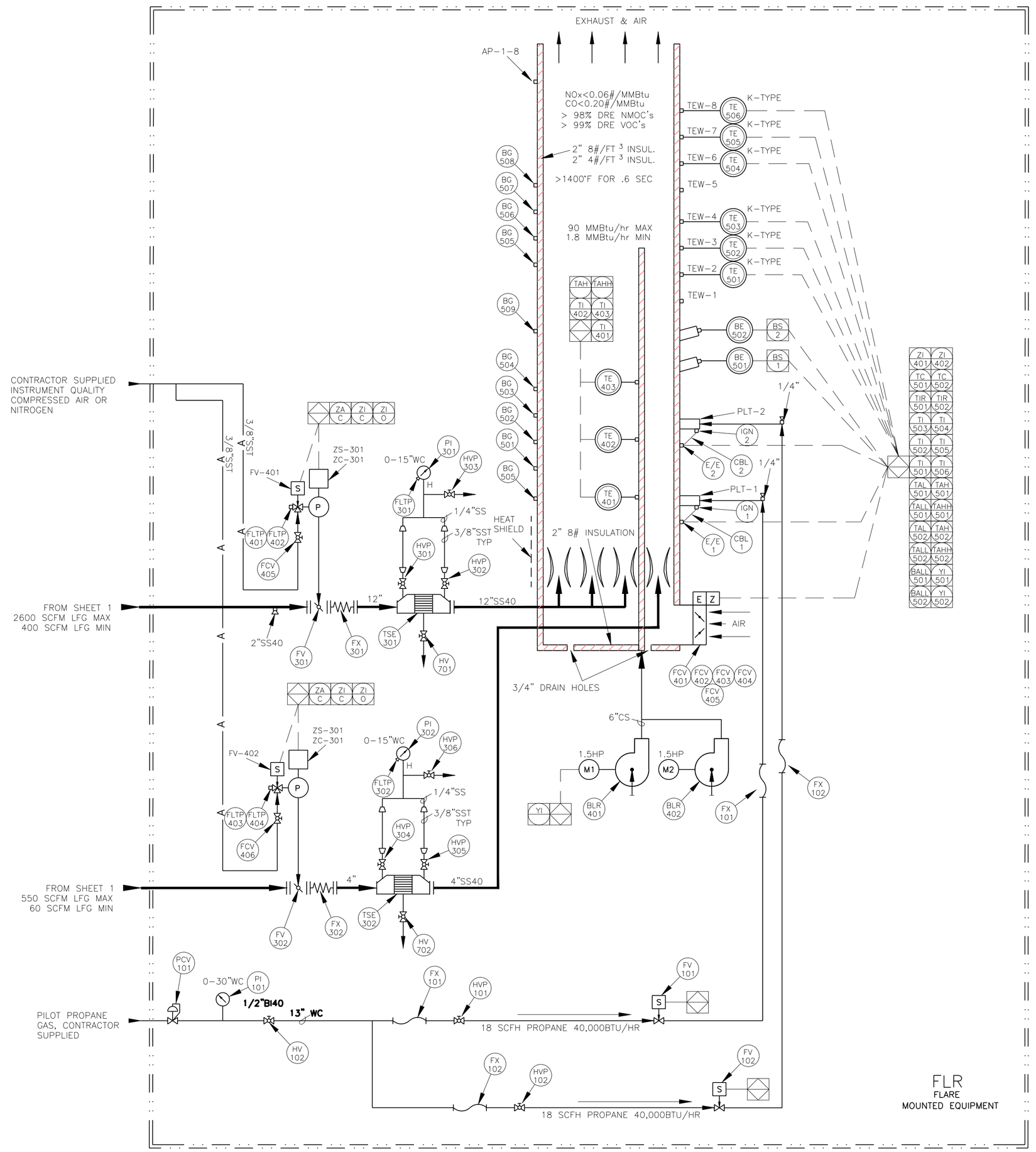

THE PROJECT WAS ORIGINALLY DESIGNED AND BID AS A REPLACEMENT OF THE BLOWER/FLARE STATION THAT INCLUDED REUSING SEVERAL COMPONENTS OF THE EXISTING FACILITIES AND 240 VAC MAIN POWER SUPPLY. THE CURRENT PROJECT, BIDDING PROCESS AND BID FORM IS BASED ON UPGRADING THE FACILITY TO USE 480 VAC POWER, REUSING VERY FEW AND SELECTED FACILITIES, AND USING A REVISED LAYOUT SHOWN ON SHEET 7A. ANY REFERENCES TO NEW 240 VAC EQUIPMENT IN THE PLANS OR SPECIFICATIONS ARE INTENDED TO BE 480 VAC.

NOTE(S)

1. INFORMATION SHOWN ON THIS DRAWING IS PRELIMINARY AND PROVIDED COURTESY OF PERENNIAL ENERGY, INC. THIS DRAWING CONTAINS PROPRIETARY DATA AND MAY NOT BE DUPLICATED, COPIED, REPRODUCED OR OTHERWISE USED IN ANY MANNER NOT IN THE BEST INTEREST OF PERENNIAL ENERGY, INC. ALL IDEAS AND CONCEPTS REMAIN THE PROPERTY OF PERENNIAL ENERGY, INC.
2. FINAL DESIGNS SHALL BE PROPOSED BY THE CONTRACTOR FOR OWNER REVIEW. CONTRACTOR SHALL DEMONSTRATE THAT EACH DESIGN COMPLIES WITH ALL PERFORMANCE REQUIREMENTS AND FUNCTIONAL INTENTS AS SHOWN OR DESCRIBED IN THESE CONTRACT DOCUMENTS.
3. CONTRACTOR SHALL SUPPLY AND INSTALL ALL EQUIPMENT IN ACCORDANCE WITH FINAL SHOP DRAWINGS, SUBMITTALS AND VENDOR INSTALLATION REQUIREMENTS, AS REVIEWED AND APPROVED BY THE OWNER / ENGINEER.
4. CONTRACTOR SHALL INTEGRATE NEW EQUIPMENT CONTROLS AND DATA OUTPUT WITH EXISTING SCADA SYSTEM, NEW SCADA SYSTEM AND BACK-UP DATA RECORDER AS DESCRIBED IN THESE CONTRACT DOCUMENTS. SEE TECHNICAL SPECIFICATIONS FOR SUMMARY OF SYSTEMS CONTROL LOGIC AND CONTROLS INTEGRATION REQUIREMENTS.
5. CONTRACTOR SHALL PROVIDE AND COORDINATE SCADA PROGRAMMING, INCLUDING PROVIDING HUMAN MACHINE INTERFACE (HMI) FOR REMOTE INTERNET AND MOBILE ACCESS TO SYSTEM FOR TRANSFERRING MONITORING DATA, VIEWING EQUIPMENT AND PROCESS STATUS, AND MAKING PROCESS ADJUSTMENTS.

Rev.	YYYY-MM-DD	DESCRIPTION	PREPARED	DESIGN	REVIEW	APPROVED
0	2016-08-19	ISSUED FOR BIDDING	MAL	APW	APW	RVW

CLIENT
WESTERN PLACER WASTE MANAGEMENT AUTHORITY
3033 FIDDYMENT ROAD
ROSEVILLE, CA. 95747

CONSULTANT
GOLDER ASSOCIATES, INC.
425 LAKESIDE DRIVE
SUNNYVALE, CALIFORNIA 94085
USA
+[1] (408) 220-9223
www.golder.com

PROJECT
WESTERN REGIONAL SANITARY LANDFILL
2016 GCCS EXPANSION

TITLE
BLOWER/ FLARE EQUIPMENT P&ID
(2 OF 2)

PROJECT No. 1420152 | Rev. 0 | 23 of 58 | DRAWING 17

Path: \\sacramento\acad\Sites\Western Regional LF\CIVIL 3D\1420152_GCCS Expansion\Concept 2 (IFB Rev0)\ | File Name: 1420152-06_Perennial Drawings [Rev B].dwg

IF THIS MEASUREMENT DOES NOT MATCH WHAT IS SHOWN, THE SHEET SIZE HAS BEEN MODIFIED FROM: ANSI D

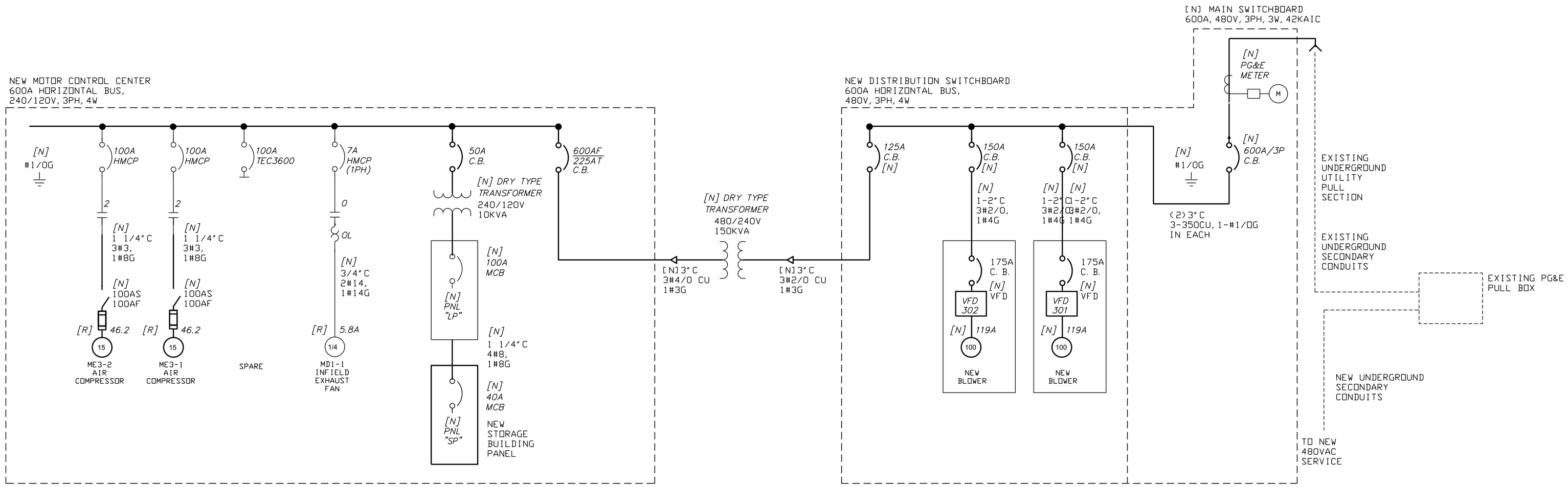

ELECTRICAL ONE LINE DIAGRAM

Western Placer Waste Management
Authority Land Fill Gas Flare Load Study
480V

BLR-301	Blower	100 HP	480V, 3PH	130.0 FLA	108.08 KVA
BLR-302	Blower	100 HP	480V, 3PH	130.0 FLA	108.08 KVA
	25% Of Largest Motor			32.5 FLA	27 KVA
				292.5 FLA	243.16 KVA

Western Placer Waste Management
Authority Land Fill Gas Flare Load Study
240/120V

M-E3-2	Air Compressor No. 2	15 HP	240V, 3PH	.0 FLA	.00 KVA
M-E3-1	Air Compressor No. 1	15 HP	240V, 3PH	42.0 FLA	17.43 KVA
M-D1-1	Blower Exhaust Fan	.25 HP	240V, 1PH	2.9 FLA	.67 KVA
M-A2-2	Demister Pump 2	.33 HP	240V, 1PH	3.6 FLA	.83 KVA
M-C2-1	Demister Pump 1	.33 HP	240V, 1PH	3.6 FLA	.83 KVA
BLR-3	Blower	75 HP	240V, 3PH	192.0 FLA	79.68 KVA
	Panel LP		240V 3Ph	25 A	10 KVA
	25% Of Largest Motor			48.0 FLA	20 KVA
				317.1 FLA	129.42 KVA

THE PROJECT WAS ORIGINALLY DESIGNED AND BID AS A REPLACEMENT OF THE BLOWER/FLARE STATION THAT INCLUDED REUSING SEVERAL COMPONENTS OF THE EXISTING FACILITIES AND 240 VAC MAIN POWER SUPPLY. THE CURRENT PROJECT, BIDDING PROCESS AND BID FORM IS BASED ON UPGRADING THE FACILITY TO USE 480 VAC POWER. REUSING VERY FEW AND SELECTED FACILITIES. AND USING A REVISED LAYOUT SHOWN ON SHEET 7A. ANY REFERENCES TO NEW 240 VAC EQUIPMENT IN THE PLANS OR SPECIFICATIONS ARE INTENDED TO BE 480 VAC.

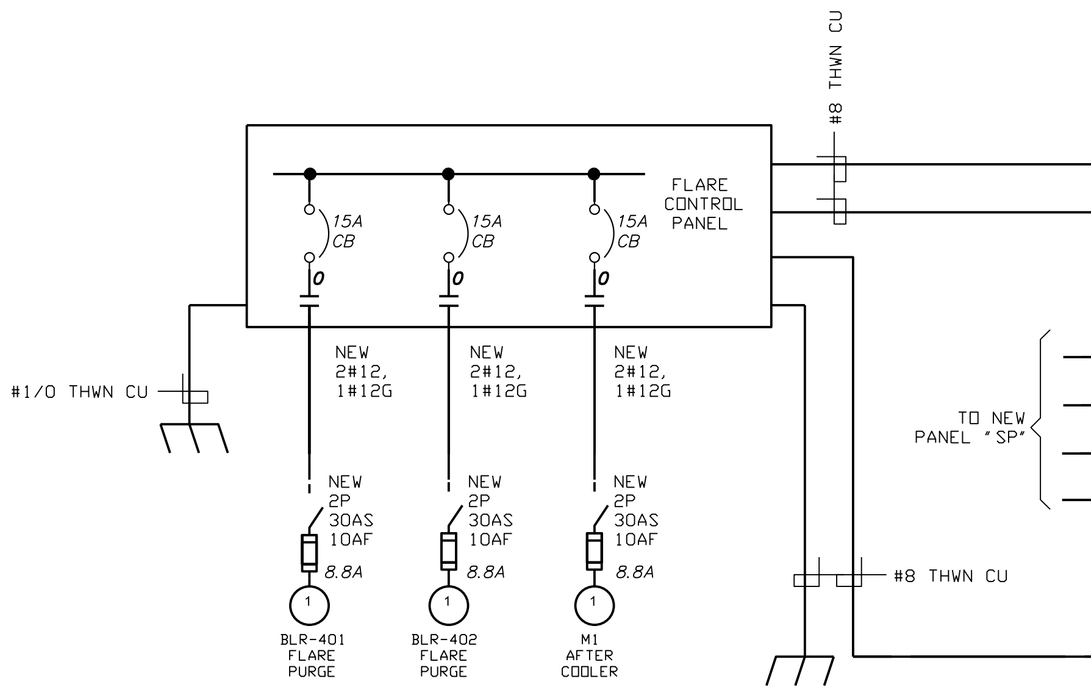

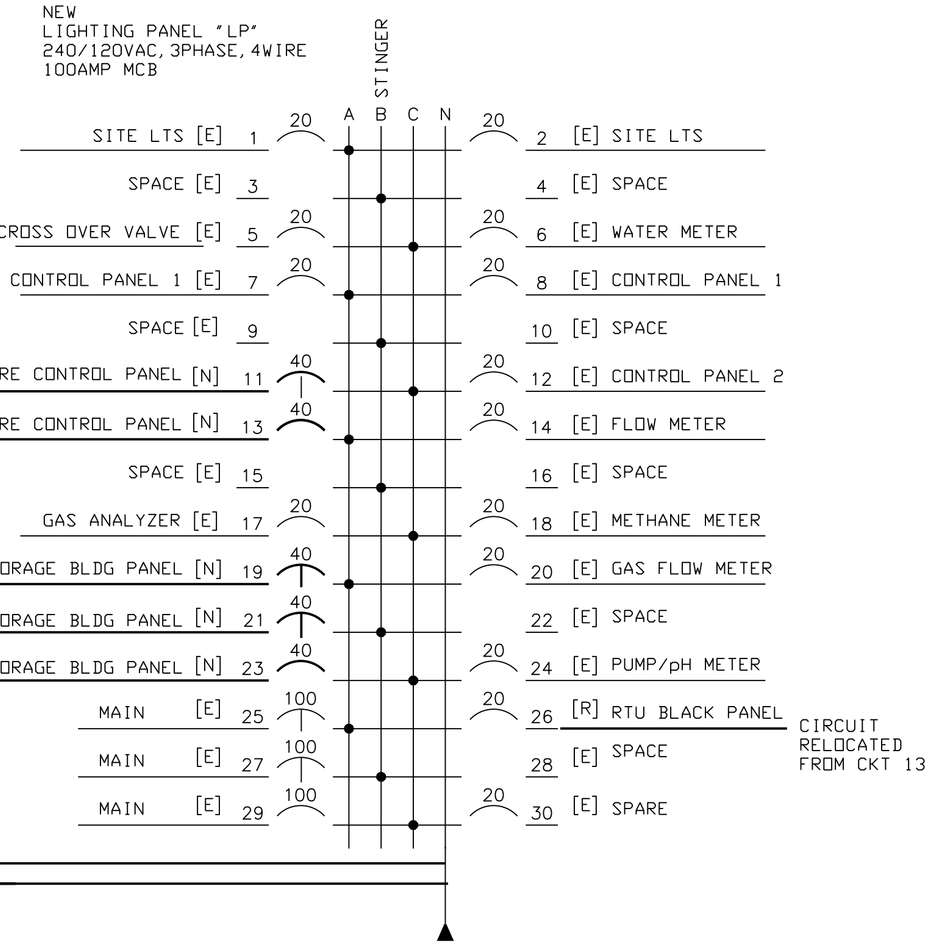

PANEL SCHEDULE

Rev.	YYYY-MM-DD	DESCRIPTION	PREPARED	DESIGN	REVIEW	APPROVED
A	2016-08-11	ISSUED FOR BID	SMA	JR	APW	JR

CLIENT
WESTERN PLACER WASTE MANAGEMENT AUTHORITY

CONSULTANT
Golder Associates

Golder Associates Inc.
425 Lakeside Drive
Sunnyvale, California 94085
USA
408-220-9223
www.golder.com

PROJECT
WESTERN REGIONAL SANITARY LANDFILL
2016 GCCS EXPANSION

TITLE
BLOWER FLARE MODIFICATIONS
ELECTRICAL ONE LINE DIAGRAM

PROJECT No. 1420152 | Rev. 1 | 25 of 48 | DRAWING E1A

Path: \\walnutcreek\acad\Sites\142-0152 WPWMA\PRODUCTION\ELECTRICAL\ | File Name: WPWMA FLARE E1A.dwg
0 1 in IF THIS MEASUREMENT DOES NOT MATCH WHAT IS SHOWN, THE SHEET SIZE HAS BEEN MODIFIED FROM: ANSI D

GENERAL NOTES

1. EQUIPMENT LAYOUT IS GENERALLY DIAGRAMMATIC, THE SIZE AND LOCATIONS OF DEVICES SHOWN ON THESE DRAWINGS SHALL BE VERIFIED. ROUTING OF WIRING SHALL BE GOVERNED BY ACTUAL CONDITIONS.
2. MOTOR CONTROL CENTER SHALL BE PROVIDED WITH ALL NECESSARY ASSEMBLIES, COMPONENTS, CONTROLLERS, PUSHBUTTONS, NAMEPLATES, TERMINAL BLOCKS AND ASSOCIATED WIRING NECESSARY TO COMPLETE THE PROJECT.
3. MOTOR WIRING AND FIELD CONTROL WIRING SHALL FEED THRU TERMINAL BLOCKS OR MARSHALLING PANELS, MCC WIRING SHALL MEET NEMA TYPE IIC REQUIREMENTS. CONTROL WIRING SHALL BE POWER LIMITED, TYPE MTW, #14AWG CU, 600V, UL1015.
4. ENDS OF CONTROL WIRING SHALL HAVE HEAT-SHRINK TYPE TAGS AT BOTH ENDS. TAGS SHALL DENOTE WIRE DESIGNATIONS.
5. ELECTRICAL CONTRACTOR SHALL ARRANGE WITH PG&E TO LOCK OUT THE INCOMING ELECTRICAL SERVICE DURING MAIN BREAKER CHANGE OVER.
6. [N]COOLING FAN AND [N]FLARE PURGE BLOWERS FED FROM [N] FLARE CONTROL PANEL.
7. PROVIDE AND INSTALL NEW NAMEPLATES AND ATTACH TO FRONT OF CUBICAL DOORS.

NUMBERED NOTES

(1) MAIN SWITCHBOARD, 600-AMP, 480V-VOLT, 3-PHASE, 3-WIRE, 42KAIC. DISCONNECT AND REMOVE EXISTING 400 AMP MAIN CIRCUIT BREAKER. PROVIDE AND INSTALL NEW 600 AMP MOLDED CASE G.E. SPECTRA ELECTRONIC TRIP MAIN CIRCUIT BREAKER, 100% CONTINUOUS RATED. RECONNECT TO EXISTING LINE AND LOAD SIDE CIRCUITRY. PROVIDE NEW TRIP PLUG, MOUNTING HARDWARE, LOAD SIDE LUGS AND ENCLOSURE FRONT PANEL AS NECESSARY. PROVIDE AND INSTALL NEW PARALLEL 350KCmil CU. CONDUCTORS FROM NEW BREAKER TO MCC IF REQUIRED.

(2) PROVIDE AND INSTALL NEW 600AF 200AT, 3POLE, 480VAC MOLDED CASE CIRCUIT BREAKER IN NEW DISTRIBUTION BOARD. MATCH VFD RECOMMENDATION. PROVIDE NEW DOOR WITH NEW LOCKABLE SWITCH AND HANDLE.

(3) DISCONNECT EXISTING AIR COMPRESSOR No. 1 (ME3-1). RECONNECT RELOCATED AIR COMPRESSOR No. 1 (ME3-1).

(4) DISCONNECT EXISTING AIR COMPRESSOR No. 2 (ME3-2). RECONNECT RELOCATED AIR COMPRESSOR No. 2 (ME3-2).

(5) PROVIDE AND INSTALL #1/0 BARE COPPER GROUND CABLE AND CONNECT EQUIPMENT TOGETHER TO FORM A CONTINUOUS GROUND NETWORK. CONNECT GROUND CABLE TO THE [N]MCC, [N]GROUND RODS, [N]FLR SKID, [N]PIP SKID, AND [N]BLOWER MOTORS. USE [N]NEMA ONE HOLE COMPRESSION LUGS AT EQUIPMENT. USE [N] EXOTHERMIC MOLDS AT TEES. CABLE BENDS SHALL MEET NEC 312.6(b)

(6) DISCONNECT EXISTING EXHAUST FAN (MD1-3). RECONNECT RELOCATED EXHAUST FAN RELABELED AS (MD1-1).

(7) CORRUGATED METAL ROOF STRUCTURE TO BE 25' LENGHT BY 9' WIDE. ROOF OVERHANGS SHALL HAVE SCREENED GUTTERS AND DOWNSPOUTS AT CORNERS OF ROOF. BUILDINGS CONTRACTOR TO PROVIDE FINAL DETAILS OF GUTTERS DOWNSPOUTS AND OTHER SHEET METAL ACCESSORIES AND METHODS OF JOINING AND ANCHORAGES. ROOF PANELS SHALL BE 24 GAUGE, G-90 ZINC-COATED (GALVANIZED) STEEL, CONFORMING TO ASTM A653, GRADE 50, 24 INCH OR 36 INCH WIDE STANDING SEAM METAL ROOF PANELS ATTACHED WITH CONCEALED SELF-TAPPING FASTENERS AT SUPPORTS AND MECHANICALLY SEAMED SIDE LAP JOINTS.

THE PROJECT WAS ORIGINALLY DESIGNED AND BID AS A REPLACEMENT OF THE BLOWER/FLARE STATION THAT INCLUDED REUSING SEVERAL COMPONENTS OF THE EXISTING FACILITIES AND 240 VAC MAIN POWER SUPPLY. THE CURRENT PROJECT, BIDDING PROCESS AND BID FORM IS BASED ON UPGRADING THE FACILITY TO USE 480 VAC POWER. REUSING VERY FEW AND SELECTED FACILITIES. AND USING A REVISED LAYOUT SHOWN ON SHEET 7A. ANY REFERENCES TO NEW 240 VAC EQUIPMENT IN THE PLANS OR SPECIFICATIONS ARE INTENDED TO BE 480 VAC.

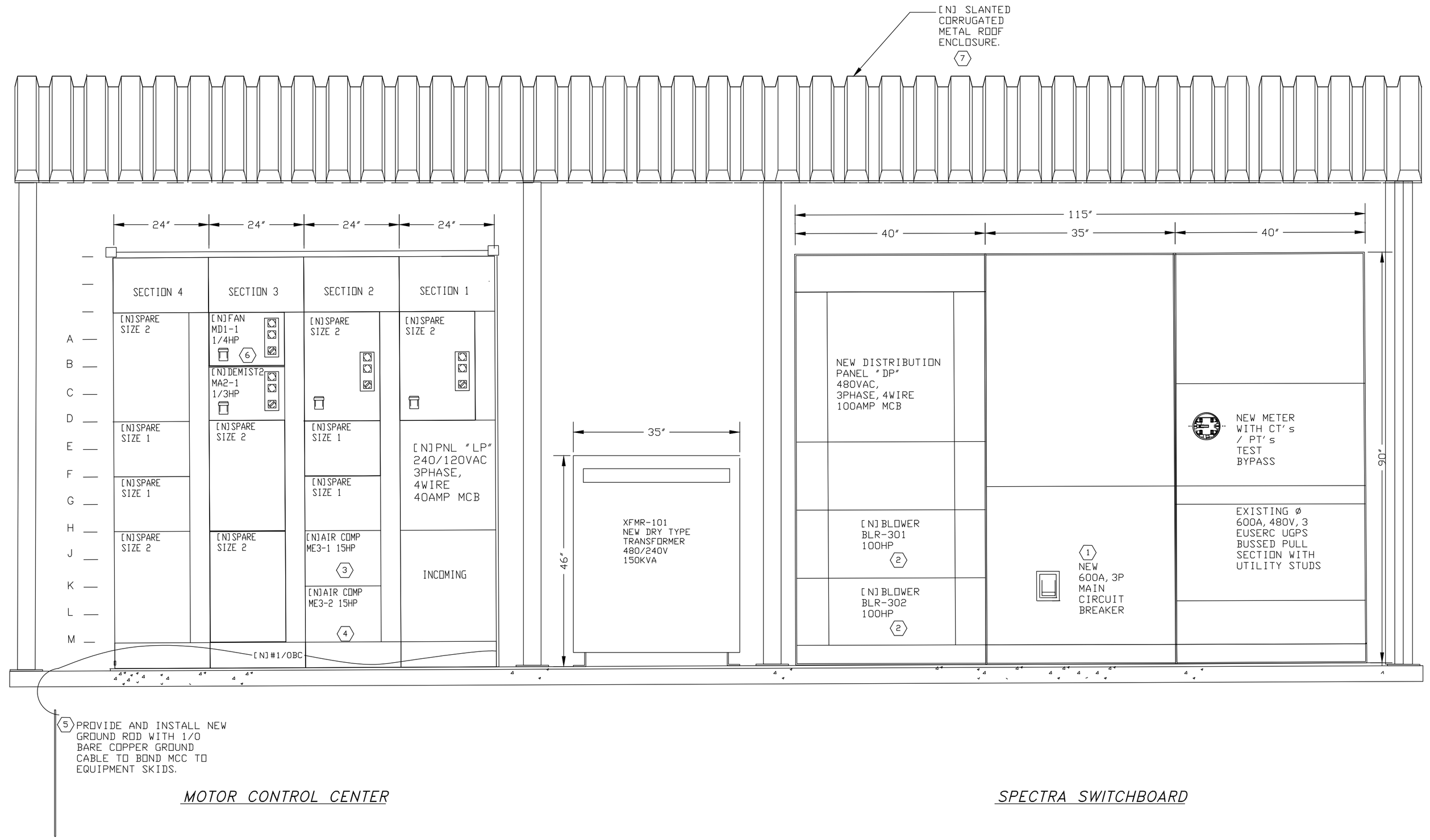

MOTOR CONTROL CENTER

SPECTRA SWITCHBOARD

Rev.	YYYY-MM-DD	DESCRIPTION	PREPARED	DESIGN	REVIEW	APPROVED
A	2016-08-11	ISSUED FOR BID	SMA	JR	APW	JR

CLIENT
WESTERN PLACER WASTE MANAGEMENT AUTHORITY

CONSULTANT
Golder Associates

Golder Associates Inc.
425 Lakeside Drive
Sunnyvale, California 94085
USA
408-220-9223
www.golder.com

PROJECT
WESTERN REGIONAL SANITARY LANDFILL
2016 GCCS EXPANSION

TITLE
BLOWER FLARE MODIFICATIONS
ELECTRICAL MOTOR CONTROL CENTER

PROJECT No.	Rev.	27 of 58	DRAWING
1420152	1		E2A

IF THIS MEASUREMENT DOES NOT MATCH WHAT IS SHOWN, THE SHEET SIZE HAS BEEN MODIFIED FROM: ANSI D

0 1 in

Path: \\wabutzreek\acad\Sites\1142-0152 WPWMA\PRODUCTION\ELECTRICAL\ | File Name: WPWMA FLARE E2A.dwg

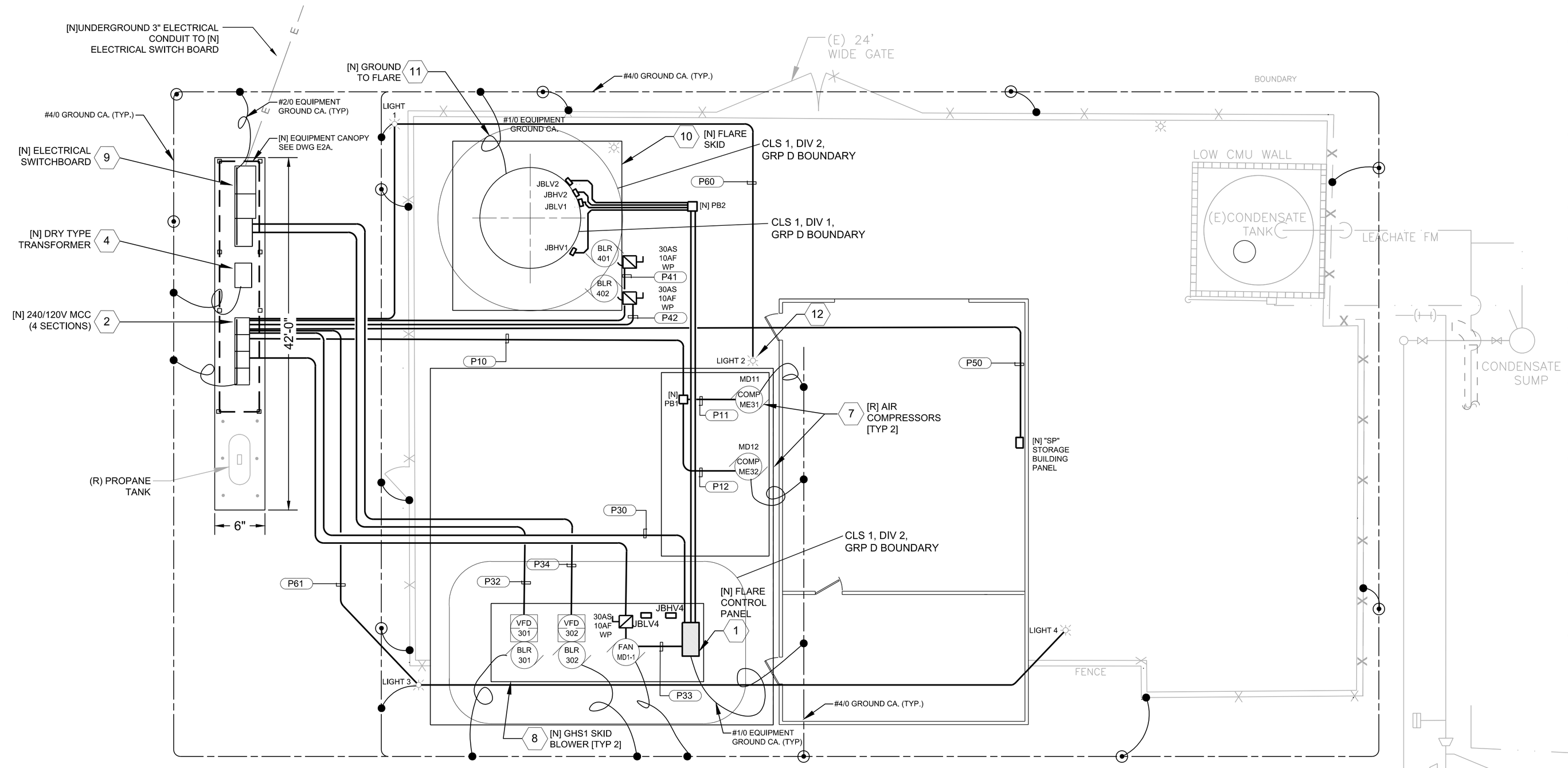

ELECTRICAL SITE PLAN

0' 10' 20'

SCALE: 1.5"=20'

NUMBERED ELECTRICAL NOTES

1. [N]FLARE CONTROL PANEL PROVIDED BY FLARE VENDOR. INSTALLED BY ELECTRICAL CONTRACTOR. VERIFY EXACT INSTALLATION REQUIREMENTS.
2. [N]MOTOR CONTROL CENTER 600A, 240/120V, 3PH, 4W SEE ELEVATION DETAIL SHEET E2A FOR NEW WORK.
3. DECOMMISSION [E] CONDENSATE CONTROL PANEL. DISCONNECT AND REMOVE [E]CIRCUITRY TO [E] FLARE CONTROL PANEL. PROVIDE AND INSTALL [N]CIRCUITRY AND EXTEND TO [N]FLARE CONTROL PANEL.
4. [N]150 KVA DRY TYPE TRANSFORMER SEE ELEVATION SHEET E2A FOR NEW WORK.
5. [E] AUBURN RTU PANEL: TRANSFER REMAINING ACTIVE SIGNALS FROM [E] RTU AND REWIRE TO NEW FLARE CONTROL PANEL INPUT MODULE FOR TRANSMISSION TO CENTRAL SCADA SERVER (COMMUNICATIONS PROTOCOL T.B.D.)
6. [N]PANEL "SP" INSTALLED IN NEW BUILDING, SEE DRAWING E-6 FOR DETAIL 120/240V,3PH,4W,40A MCB, TYPE 1 SURFACE CABINET.
7. [R]AIR COMPRESSORS. DISCONNECT AND REMOVE [E]CONDUIT AND CIRCUITRY FROM [E]COMPRESSORS. PROVIDE AND INSTALL [N]CONDUIT AND CIRCUITRY TO RELOCATED COMPRESSORS AND CONNECT.
8. [N]125HP BLOWER GAS HANDLING SKID [GHS-1]. PROVIDE AND INSTALL [N]CONDUIT AND CIRCUITRY AND CONNECT TO SKID MOUNTED FIELD WIRING TERMINAL BOXES. SKID MOUNTED PRE-WIRED BOXES BY OTHERS. VERIFY EXACT TERMINATION REQUIREMENTS WITH FLARE EQUIPMENT CONTRACTOR.
9. [N]SWITCHBOARD WITH METERING 600A, 480VAC, 3PHASE, 4 WIRE SEE ELEVATION DETAIL SHEET E2A FOR NEW WORK.
10. [N]GAS FLARE SKID [FLR] PROVIDE AND INSTALL [N]CONDUIT AND CIRCUITRY AND CONNECT TO SKID MOUNTED FIELD WIRING TERMINAL BOXES. SKID PRE-WIRED BY OTHERS. VERIFY EXACT TERMINATION REQUIREMENTS.
11. [N]GROUNDING. PROVIDE AND INSTALL ONE [N]#1/0 BARE COPPER GROUND CABLE AND CONNECT TO FLARE AND PIP SKID STEEL, BLOWER ENCLOSURES, [N]CONTROL PANEL AND [E]MCC GROUNDED BUS BAR.
12. [N] LIGHTING SHOWN PER PLACER COUNTY REGULATIONS.

THE PROJECT WAS ORIGINALLY DESIGNED AND BID AS A REPLACEMENT OF THE BLOWER/FLARE STATION THAT INCLUDED REUSING SEVERAL COMPONENTS OF THE EXISTING FACILITIES AND 240 VAC MAIN POWER SUPPLY. THE CURRENT PROJECT, BIDDING PROCESS AND BID FORM IS BASED ON UPGRADING THE FACILITY TO USE 480 VAC POWER, REUSING VERY FEW AND SELECTED FACILITIES, AND USING A REVISED LAYOUT SHOWN ON SHEET 7A. ANY REFERENCES TO NEW 240 VAC EQUIPMENT IN THE PLANS OR SPECIFICATIONS ARE INTENDED TO BE 480 VAC.

ELECTRICAL NOTES

1. ELECTRICAL MATERIALS INSTALLED IN HAZARDOUS LOCATIONS, AS DEFINED BY NFPA 70, SHALL HAVE UTILIZATION LISTING. APPLIES TO NEW CONSTRUCTION ONLY. BOUNDARIES AND : THE AREA RADIATING 3' FROM BURNER EXHAUST OPENING - CLASS 1, DIVISION 1, GROUP D, CLASSIFICATIONS THE AREA RADIATING 5' FROM BLOWERS, AND BLOWER DISCHARGE VALVES AND FLANGES - CLASS 1, DIVISION 2, GROUP D,
2. PROVIDE CONDUITS WITH UL886 SEALS AND APPROVED SEALING COMPOUND WHEN PENETRATING BOUNDARIES OR WHEN PIERCING GRADE. SEALS SHALL BE WITHIN 18" OF ENCLOSURES OR GRADE. SEALS SHALL BE PACKED AND POURED AFTER COMMISSIONING.
3. COMMON GROUNDING SYSTEM IS REQUIRED. UTILIZE [E]GROUND RODS, REPLACE ANY GROUND CABLE OR GROUND CONNECTORS THAT ARE LOOSE OR WORN, AS REQUIRED. TEST GROUND RESISTANCE. THE SYSTEM SHALL NOT EXCEED 25 OHMS. .
4. PROVIDE AND INSTALL CONDUIT AND WIRE FROM TRAY TO TERMINAL BOXES. CONTROL PANELS, MOTORS, AND INSTRUMENTATION. TERMINAL BOXES PROVIDED AND INSTALLED BY SKID MANUFACTURER. REFER TO VENDOR DRAWINGS FOR TERMINATION REQUIREMENTS..
5. MOTORS, INSTRUMENTS AND THE LIKE THAT ARE NOT PRE-CONNECTED TO A TERMINAL BOXES SHALL BE CONNECTED BY ELECTRICAL CONTRACTOR..COORDINATE WITH VENDOR FOR THE EXACT NUMBER OF DEVICES TO BE FIELD CONNECTED..

ELECTRICAL LEGEND

- 1 — NUMBERED NOTE
- C10 — CONDUIT TAG
- IY 300 — INSTRUMENT TAG
- NEW CONDUIT
- CONDUIT BY OTHERS (OR CONDUIT EXISTING)
- GROUND CABLE
- GROUND ELECTRODE
- CONNECTION
- CONDUIT SEAL
- BOX
- NEW PANEL

P - POWER
C - CONTROL
S - SIGNAL

- CIRCUIT BREAKER
- CONTACTOR
- OVERLOAD
- BLR 301 — MOTOR
- [N] NEW
- [E] EXISTING
- [R] REPLACE OR RELOCATE

- PRIMARY U/G GROUND CABLE, #4/0 STRANDED BARE COPPER
- BRANCH GROUND CABLE TAP, #2/0 STRANDED BARE COPPER
- GROUND CONNECTION OR BOND
- GROUND ROD

Rev.	YYYY-MM-DD	DESCRIPTION	PREPARED	DESIGN	REVIEW	APPROVED
A	2016-08-11	ISSUED FOR BID	SMA	JR	APW	JR

CLIENT
WESTERN PLACER WASTE MANAGEMENT AUTHORITY

CONSULTANT
Golder Associates

Golder Associates Inc.
425 Lakeside Drive
Sunnyvale, California 94085
USA
408-220-9223
www.golder.com

PROJECT
WESTERN REGIONAL SANITARY LANDFILL
2016 GCCS EXPANSION

TITLE
BLOWER FLARE MODIFICATIONS
ELECTRICAL SITE PLAN

PROJECT No. 1420152 | Rev. 1 | 29 of 58 | DRAWING E3A

IF THIS MEASUREMENT DOES NOT MATCH WHAT IS SHOWN, THE SHEET SIZE HAS BEEN MODIFIED FROM: ANSI D

Path: \\walnutcreek\acad\Sites\1422-0152 WPWMA\PRODUCTION\ELECTRICAL\ | File Name: WPWMA FLARE E3A.dwg

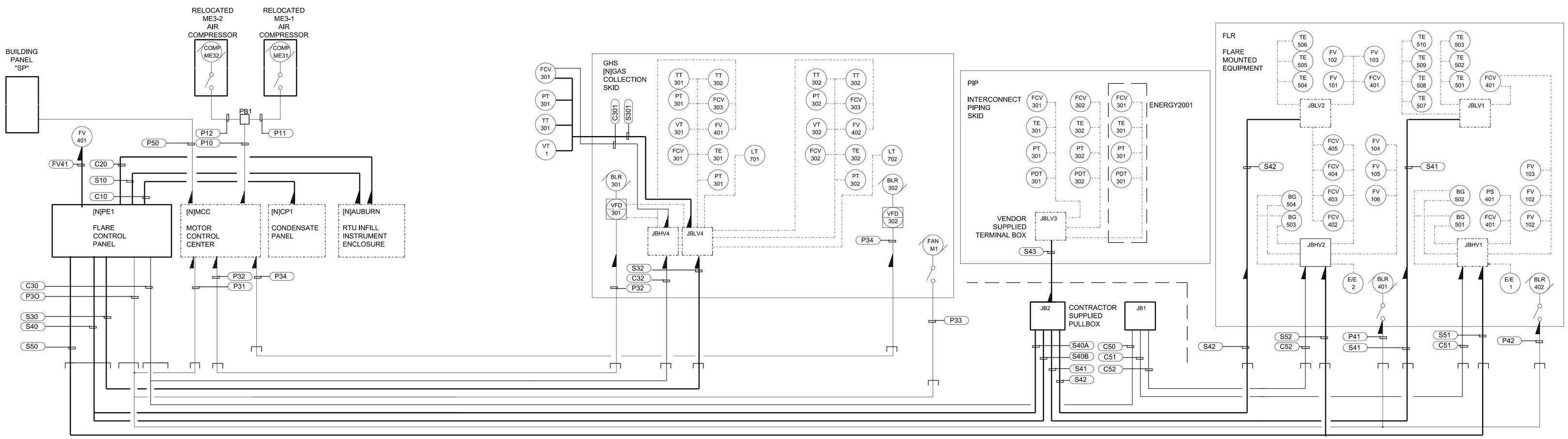

CONDUIT BLOCK DIAGRAM

LINE	TAG	SIZE	TYPE	GRND	FILL	MAT	INSUL	FROM	TO	
1	P10	1 1/4"	RMC	1#6g	6#3	CU	THWN	[N]MCC	Compressors JB	
2	P11	1'	RMC	1#6g	3#3	CU	THWN	Compressors JB	Compressor ME3-1	
3	P12	1'	RMC	1#6g	3#3	CU	THWN	Compressors JB	Compressor ME3-2	
4	P30	2"	RMC	2#12G,1#8G	2C#10,2C#12,3C#8	CU	THWN/TC	PE1 Flare Control	M1 Fan/MCC/BLR 401,2	
5	P31	1"	RMC	1#8g	3C#8	CU	THWN/TC	PE1 Flare Control	[N]MCC	
6	P32	2"	RMC	1#3G	3#4/0	CU	THWN	VFD-301	[N]MCC	
7	P33	3/4"	RMC	1#12g	2C#12	CU	THWN/TC	PE1 Flare Control	M1 Fan	
8	P40	1 1/2"	RMC	1#10g	2-2C#10	CU	THWN/TC	PE1 Flare Control	BLR 401/402	
9	P41	3/4"	RMC	1#10g	2C#10	CU	THWN/TC	PE1	BLR 401	
10	P42	3/4"	RMC	1#10g	2C#10	CU	THWN/TC	PE1	BLR 402	
11	P50	1"	RMC	1#8G	3#8	C U	THWN	[N]MCC	PANEL SP	
12	P32	2"	RMC	1#3G	3#4/0	CU	THWN	VFD-302	[N]MCC	
13	C10	1"	RMC	1#14g	8C#14	CU	THWN/TC	PE1 Flare Control	[E]Condensate Panel	
14	C20	1"	RMC	1 #14g	2-8C#14 (8rd,8wt)	CU	THWN/TC	PE1 Flare Control	[N]RTU	
15	P51	1"	RMC	1 #8g						
16	C30	2"	MC	1#14g	17-2C#14 (16rd,1bl,11wt)	CU	THWN/TC	PE1 Flare Control	[N]VFD-1/GHS1/PIP JB1	
17	C31	1 1/2"	RMC	1#14g	6-2C#14 (6rd,6wt)	CU	THWN/TC	PE1	[N]VFD-1	
18	C32	1 1/2"	RMC	1#14g	4-2C#14 (3rd,1bl,4wt)	CU	THWN/TC	RE1	HS1 JBHV4	
19	C301	1"	RMC	1#14g	2C#14 (1bl,1wt)	CU	THWN/TC	FCV-301	GHS1 JBHV4	
20	C50	2"	RMC	1#16g	7-2C#16 (11rd,2wt)	CU	THHN/TC	PE1 Flare Control	PIP JB1	
21	C51	1 1/2"	RMC	5#16g	4-2C#16 (6rd,2wt)	CU	THHN/TC	FLR JBHV1	PIP JB1	
22	C52	1 1/2"	RMC	5#16g	3-2C#16 (5rd,1wt)	CU	THHN/TC	FLR JBHV2	PIP JB1	
23	C60	1"	RMC	1#14g	8C#14	CU	THHN/TC	PE1	[N]FLARE CTRL	
24	S10	1"	RMC	_	Empty	_	_	PE1 Flare Control [N]BLDG		
25	S20	3/4"	RMC		1-CAT 5 Cable			PE1 Flare Control	[N]RTU	
26	S30	1 1/2"	RMC	1#16g	8-2c#16TSP	_	Belden 8760	PE1 Flare Control	[N]VFD-1/GHS1 JBLV4	
27	S31	3/4"	RMC	1#16g	2-2c#16TSP	_	Belden 8760	PE1	[N]VFD-1	
28	S32	2"	RMC	1#16g	17-2c#16TSP		Belden 8760	PE1	GHS1 JBLV4	
29	S301	1 1/4"	RMC	1#16g	4-2c#16TSP		Belden 8760	FCV-301	GHS1 JBLV4	
30	S40A	1 1/2"	RMC	1#16g	17-2c#16TSP	_	Belden 8760	PE1 Flare Control	PIP JB2	
31	S40B	1 1/2"	RMC	13#16g	10-2c#18(Type K),3-2c#18 (Type E)			PE1 Flare Control	PIP JB2	
32	S41	1 1/2"	RMC	7#16g	7-2c#18(Type K),4-2c#16TSP		Belden 8760	FLR JBLV1	PIP JB2	
33	S42	1 1/2"	RMC	3#16g	3-2c#18(Type K),4-2c#16TSP		Belden 8760	FLR JBLV2	PIP JB2	

No	TAG	SIZE	TYPE	GRND	FILL	MAT	INSUL	FROM	TO	
34	S43	2"	RMC	3#16g	3-2c#18(Type E), 9-2c#16TSP	_	Belden 8760	PIP JBLV3	PIP JB2	
35	S50	1 1/4"	RMC	1#16g	4-2c#16TSP	_	Belden 8760	PE1 Flare Control	FLR JBHV1,2	
36	S51	3/4"	RMC	1#16g	2-2c#16TSP	_	Belden 8760	PE1	FLR JBHV1	
37	S52	3/4"	RMC	1#16g	2-2c#16TSP	_	Belden 8760	PE1	FLR JBHV2	
38										
39	VT1	3/4"	RMC/LFMC	1#14g	1-2c#16TSP	CU	Belden 8760	S301	VT1	
40	TT301	3/4"	RMC/LFMC	1#16g	1-2c#18(Type E)	_	Omega	S301	TE1	
41	PT301	3/4"	RMC/LFMC	1#14g	1-2c#16TSP	CU	Belden 8760	S301 VT2		
42	P60	1"	RMC	1#10g	1-2C#10	CU	THWN/TC	"LP" LIGHTING PANEL	LGHT 1, 2	
43	P61	1"	RMC	1#10g	1-2C#10	CU	THWN/TC	"LP" LIGHTING PANEL	LGHT 2,3	
44	FCV301	3/4"	RMC/LFMC	1#16g	2C#14	_	THWN	C201	TE302	
45	FV41	3/4"	RMC/LFMC	1#14g	2-2c#16TSP	CU	Belden 8760	PE1 Flare Control	FCV303	
46	S40	2"	RMC	14#16g	17-2c#16TSP,3-2C#18(TYPE E) 10-2c#18(Type K)	_	Belden 8760	PE1 Flare Control	PIP JB2	

CONSTRUCTION NOTES

1 WHEN CABLE TRAY IS USED AS A SUBSTITUTE TO CONDUIT REPLACE SINGLE CONDUCTORS FOR MULTI CONDUCTOR CABLE USE UL LISTED TC CABLE. EXAMPLE: 14#14THWN SINGLE CONDUCTORS IS EQUAL TO 7-2C#14THHN TC CABLES.

2 CABLE TYPES AS FOLLOWS:

2C#14 TC	2-Wire THHN in PVC Tray Cable, Include B.C.GROUND
2c#16TSP	2 Insulated Twisted Shield Pair, Belden 8760
2c#18(type E)	E-Type Thermocouple Wire Omega
2c#18(type K)	K-Type Thermocouple Wire Omega XC-K-20

3 BUILDING LIGHTING AND RECEPTACLES NOT INCLUDED IN SCHEDULE. CONDUIT AND CIRCUITRY NOT SHOWN HERE SHALL BE SIZED USING 20160 NATIONAL ELECTRICAL CODE.

THE PROJECT WAS ORIGINALLY DESIGNED AND BID AS A REPLACEMENT OF THE BLOWER/FLARE STATION THAT INCLUDED REUSING SEVERAL COMPONENTS OF THE EXISTING FACILITIES AND 240 VAC MAIN POWER SUPPLY. THE CURRENT PROJECT, BIDDING PROCESS AND BID FORM IS BASED ON UPGRADING THE FACILITY TO USE 480 VAC POWER, REUSING VERY FEW AND SELECTED FACILITIES, AND USING A REVISED LAYOUT SHOWN ON SHEET 7A. ANY REFERENCES TO NEW 240 VAC EQUIPMENT IN THE PLANS OR SPECIFICATIONS ARE INTENDED TO BE 480 VAC.

Rev.	YYYY-MM-DD	DESCRIPTION	PREPARED	DESIGN	REVIEW	APPROVED
A	2016-08-25	ISSUED FOR BIDDING	SMA	JR	APW	JR

CLIENT
WESTERN PLACER WASTE MANAGEMENT AUTHORITY

PROJECT
WESTERN REGIONAL SANITARY LANDFILL
2016 GCCS EXPANSION

CONSULTANT
Golder Associates

Golder Associates Inc.
425 Lakeside Drive
Sunnyvale, California 94085
USA
408-220-9223
www.golder.com

TITLE
BLOWER FLARE MODIFICATIONS
ELECTRICAL CONDUIT BLOCK DIAGRAM

PROJECT No. 1420152
Rev. 1

DRAWING E4A

IF THIS MEASUREMENT DOES NOT MATCH WHAT IS SHOWN, THE SHEET SIZE HAS BEEN MODIFIED FROM: ANSI D
0 1 in

Path: \\walnutcreek\acad\Sites\142-0152 WPWMA\PRODUCTION\ELECTRICAL\ | File Name: WPWMA FLARE E4A.dwg

REMOTE TELEMETRY UNIT – I/O SCHEDULE

TAG NAME	TYPE	DESCRIPTION	CONNECTION	MISC.
EXISTING FLARE SIGNALS TO AUBURN PLC VIA HARD WIRE INPUTS				
LLF11	DA	PLC STATUS	RTU DI 3	[No Change]
LLF12	DA	FLARE FLAME OUT	RTU DI 4	NOTE 1
LLF13	DA	DEMISTER PUMP FAILURE	RTU DI 5	[No Change]
LLF14	DA	FAILURE TO RE-START	RTU DI 6	NOTE 1
LLF15	DA	PERIMETER BLOWER 1 FAILURE	RTU DI 7	NOTE 2
LLF21	DA	GENERAL FLAME FAILURE	RTU DI 8	NOTE 1
LLF22	DA	INFILL BLOWER 3 FAILURE	RTU DI 9	NOTE 3
LLF23	DA	PERIMETER BLOWER 2 FAILURE	RTU DI 10	NOTE 2
LLF24	DA	FLARE TEMPERATURE HIGH	RTU DI 11	NOTE 1
LLF25	DA	CONDENSATE TANK 66% FULL	RTU DI 12	[No Change]
LLF26	DA	FLARE TEMPERATURE LOW	RTU DI 13	NOTE 1
LLF27	DA	CONDENSATE TANK 100% FULL	RTU DI 14	[No Change]
LLF28	DA	INFILL DEMISTER TANK LEVEL	RTU DI 15	[No Change]
LLFANALF	DA	ANALYZER FAULT	RTU DI 2	[No Change]
LLFANALCLA	DA	ANALYZER CALIBRATING	RTU DI 1	[No Change]
LLFCH4	AI	GAS ANALYZER METHANE	RTU AI 1	[No Change]
LLF02	AI	GAS ANALYZER OXYGEN	RTU AI 2	[No Change]
LLFFLOW3	AI	GAS ANALYZER FLOW	RTU AI 3	[No Change]
LLFTVFD	AI	VFD SPEED	RTU AI 4	NOTE 3
LLF2001FLOW1	AI	ENERGY2001 FLOW	YOKOGAWA 1	[T.B.D.]
LLF2001TEMP	AI	ENERGY2001 TEMP	YOKOGAWA 2	[T.B.D.]
LLFWMFLOW 1	AI	WPSL INFILL FLOW	YOKOGAWA 3	[T.B.D.]
LLF2001FLOWTOTAL	AI	ENERGY2001 FLOW TOTAL	YOKOGAWA 5	[T.B.D.]
LLFWMTEMP	AI	WPWM FLARE TEMP	YOKOGAWA 6	NOTE 1

TAG NAME	TYPE	DESCRIPTION
NEW DUAL FLARE SIGNALS TO AUBURN PLC VIA LAN DATA LINK WITH [N]FLARE CONTROL PANEL.		
LLF--	DA	FAILURE TO RE-START
LLF--	DA	GENERAL FLAME FAILURE
LLF--	DA	ZONE A FLARE FLAME OUT
LLF--	DA	ZONE B FLARE FLAME OUT
LLF--	DA	ZONE A FLARE TEMPERATURE HIGH
LLF--	DA	ZONE B FLARE TEMPERATURE HIGH
LLF--	DA	ZONE A FLARE TEMPERATURE LOW
LLF--	DA	ZONE B FLARE TEMPERATURE LOW
LLF--	DA	BLOWER 1 FAILURE
LLF--	DA	BLOWER 2 FAILURE
LLF--	DA	COMPRESSOR STARTS 1 - 2
LLF--	AI	VFD 1 SPEED
LLF--	AI	VFD 2 SPEED
	AI	CONDENSATE/LEACHATE METER GPM
	AI	CONDENSATE/LEACHATE METER TOTAL GALLONS
	AI	ZONE A FLOW FPM
	AI	ZONE B FLOW FPM
	AI	ZONE A TEMPERATURE
	AI	ZONE B TEMPERATURE
	AI	PRIMARY BLOWER BEARING TEMPERATURE
	AI	LFG TEMPERATURE
	AI	COMPRESSOR AIR PRESSURE
	AI	REMOTE LEACHATE FLOW METER TOTALS

1. SIGNALS TO REMAIN AS LONG AS EXISTING FLARE CONTINUES TO REMAIN IN SERVICE.
2. BLOWER SHALL BE DECOMMISSIONED AND STATUS SIGNAL SHALL BE ABANDON.
3. BLOWER TO REMAIN IN SERVICE. STATUS SIGNAL TO BE TRANSFERRED OVER TO NEW FLARE CONTROL PANEL.
4. THIS SCHEDULE IS PRELIMINARY AND IS INTENDED TO BE USED AS A REFERENCE ONLY.

THE PROJECT WAS ORIGINALLY DESIGNED AND BID AS A REPLACEMENT OF THE BLOWER/FLARE STATION THAT INCLUDED REUSING SEVERAL COMPONENTS OF THE EXISTING FACILITIES AND 240 VAC MAIN POWER SUPPLY. THE CURRENT PROJECT, BIDDING PROCESS AND BID FORM IS BASED ON UPGRADING THE FACILITY TO USE 480 VAC POWER, REUSING VERY FEW AND SELECTED FACILITIES, AND USING A REVISED LAYOUT SHOWN ON SHEET 7A. ANY REFERENCES TO NEW 240 VAC EQUIPMENT IN THE PLANS OR SPECIFICATIONS ARE INTENDED TO BE 480 VAC.

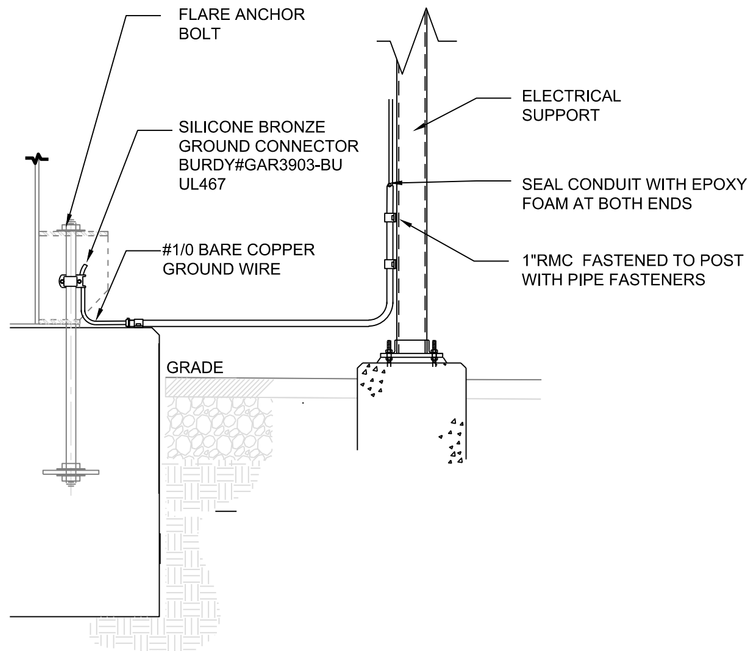

FLARE GROUNDING DETAIL
SCALE: NONE — E3A

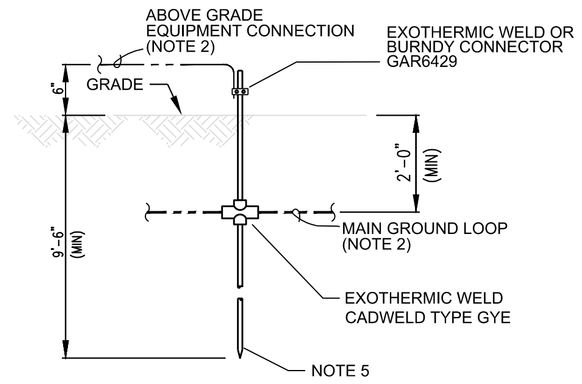

GROUND ROD
ABOVE GRADE CONNECTION WITH MAIN GROUND LOOP

DETAIL
SCALE: NONE — E3A

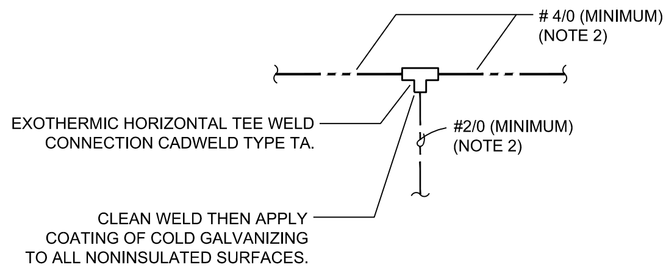

LEGEND SYMBOL: ●

UNDERGROUND TAP
#4/0 MAIN GROUND LOOP

DETAIL
SCALE: NONE — E3A

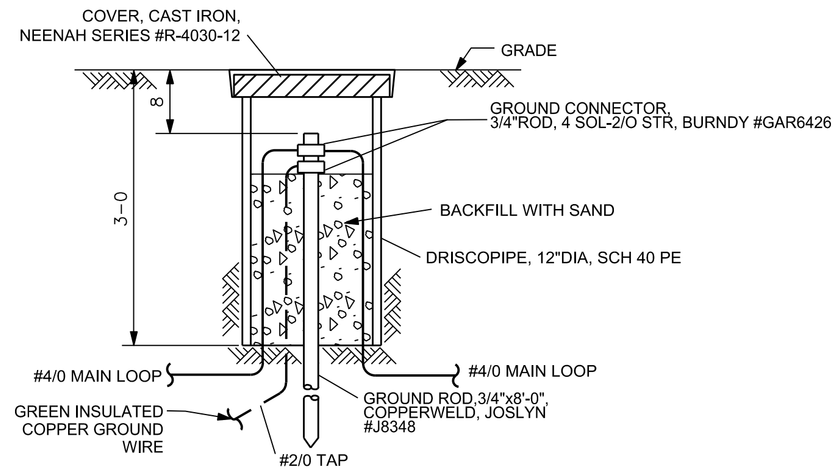

GROUND TEST WELL

DETAIL
SCALE: NONE — E3A

NOTES

1. CABLE TERMINALS TO BE EQUAL TO BURNDY "EA."
2. ALL GROUND WIRE TO BE STRANDED COPPER WITH GREEN 600V XHHW OR THW INSULATION.
3. MOTOR CONTROL CENTERS AND SWITCH GEAR SHALL HAVE A MINIMUM OF TWO "MAIN GROUND LOOP" SIZED GROUND CONNECTIONS FROM THE EQUIPMENT GROUND BUS DIRECTLY TO THE MAIN GROUND LOOP.
4. SERVIT POST SHALL BE EQUAL TO BURNDY "KC"
5. GROUND ROD TO BE 3/4" x 10' GALVANIZED STEEL. FOR EFFECTIVE USE OF GROUND ROD, RODS SHALL BE SPACED A MINIMUM OF 20' APART. REMOVE ROD GALVANIZING TO BARE STEEL BEFORE MAKING EXOTHERMIC (CADWELD) CONNECTION. THAN APPLY COATING OF COLD GALVANIZING TO ALL BARE METAL NON-GALVANIZED SURFACES.
6. SECURE PVC CONDUIT TO CONCRETE AT TWO LOCATIONS WITH CONDUIT CLAMPS.
7. MAIN GROUND LOOP TO BE DESIGNED ACCORDING TO FACILITY REQUIREMENTS BUT NOT SMALLER THAN #1/0.

Rev.	YYYY-MM-DD	DESCRIPTION	PREPARED	DESIGN	REVIEW	APPROVED
A	2016-12-18	ISSUED FOR BID	SMA	JR	APW	JR

CLIENT
WESTERN PLACER WASTE MANAGEMENT AUTHORITY

CONSULTANT
Golder Associates
Golder Associates Inc.
425 Lakeside Drive
Sunnyvale, California 94085
USA
408-220-9223
www.golder.com

PROJECT
WESTERN REGIONAL SANITARY LANDFILL
2016 GCCS EXPANSION

TITLE
BLOWER FLARE MODIFICATIONS
ELECTRICAL DETAILS

PROJECT No. 1420152 | Rev. 1 | | DRAWING E5A

Path: \\walnutcreek\acad\Sites\142-0152 WPWMA\PRODUCTION\ELECTRICAL\ | File Name: WPWMA FLARE E5A.dwg
0 1in IF THIS MEASUREMENT DOES NOT MATCH WHAT IS SHOWN, THE SHEET SIZE HAS BEEN MODIFIED FROM: ANSI D

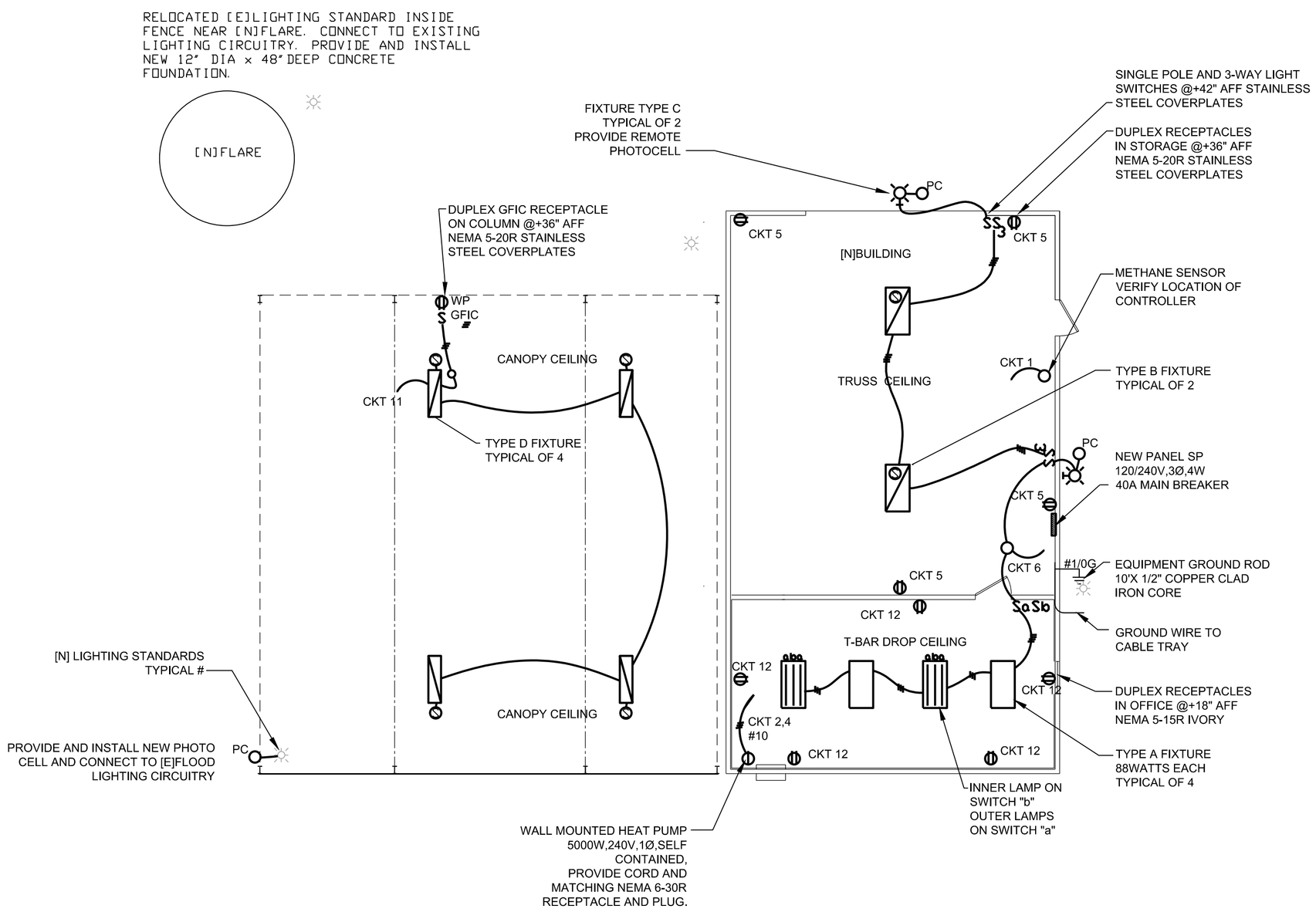

STORAGE BUILDING / CANOPY

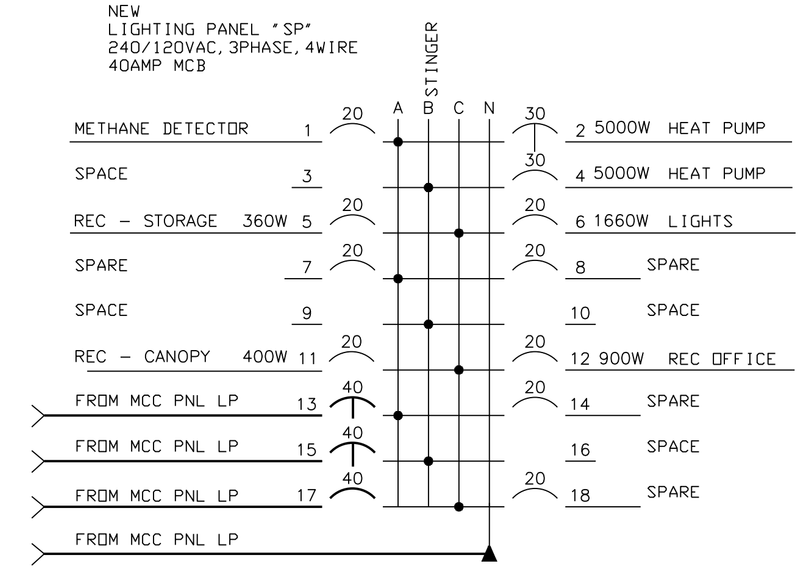

PANEL SCHEDULE

ELECTRICAL FLOOR PLAN

LIGHTING FIXTURE SCHEDULE

TYPE	WATTAGE	DESCRIPTION
FIXTURE TYPE A	3-32WT8 CW LAMPS	2X4 RECESSED T-BAR FIXTURE PRISMATIC LENS, 2-BALLAST
FIXTURE TYPE B	4-T5HO 57WATT LAMPS	2X4 LOWBAY FLUORESCENT PENDENT SECULAR REFLECTOR, MOTION SENSOR
FIXTURE TYPE C	1-ARRAY 60WATT LED 5000K	LED FLOOD IN WALL PACK @+12'-0" 13"Wx9"H IP65 W/REMOTE PHOTOCELL
FIXTURE TYPE D	2-T5HO 57WATT LAMPS	2X4 ENCLOSED FLUORESCENT PENDENT UL WET LOCATIONS, REMOTE MOTION SENSOR

CONSTRUCTION NOTE

1. CIRCUITRY SHALL BE IN CONDUIT AT ALL TIMES. CONDUIT CONCEALED IN WALLS OR CEILINGS SHALL BE EMT, RMC, OR IMC. CONDUIT IN EXPOSED AREAS IN STORAGE OR UNDER CANOPY SHALL BE GALVINIZED RIGID METAL CONDUIT "RMC".
2. PROVIDE AND INSTALL APPROVED AUTOMATIC FIRE ALARM SYSTEM. IF REQUIRED BY CODE.
3. LIGHTING FIXURE INSTALLATION SHALL MEET REQUIREMENTS IN CALIFORNIA TITLE 24 ENERGY COMPLIANCE REGULATIONS.

THE PROJECT WAS ORIGINALLY DESIGNED AND BID AS A REPLACEMENT OF THE BLOWER/FLARE STATION THAT INCLUDED REUSING SEVERAL COMPONENTS OF THE EXISTING FACILITIES AND 240 VAC MAIN POWER SUPPLY. THE CURRENT PROJECT, BIDDING PROCESS AND BID FORM IS BASED ON UPGRADING THE FACILITY TO USE 480 VAC POWER. REUSING VERY FEW AND SELECTED FACILITIES. AND USING A REVISED LAYOUT SHOWN ON SHEET 7A. ANY REFERENCES TO NEW 240 VAC EQUIPMENT IN THE PLANS OR SPECIFICATIONS ARE INTENDED TO BE 480 VAC.

0' 10' 20'
SCALE: 1.5" =20'

Rev.	YYYY-MM-DD	DESCRIPTION	PREPARED	DESIGN	REVIEW	APPROVED
A	2016-08-11	ISSUED FOR BID	SMA	JR	APW	JR

CLIENT
WESTERN PLACER WASTE MANAGEMENT AUTHORITY

PROJECT
WESTERN REGIONAL SANITARY LANDFILL
2016 GCCS EXPANSION

CONSULTANT
Golder Associates
Golder Associates Inc.
425 Lakeside Drive
Sunnyvale, California 94085
USA
408-220-9223
www.golder.com

TITLE
BLOWER FLARE MODIFICATIONS
ELECTRICAL FLOOR PLAN - STORAGE BUILDING

PROJECT No. 1420152
Rev. 1

DRAWING E6A

IF THIS MEASUREMENT DOES NOT MATCH WHAT IS SHOWN, THE SHEET SIZE HAS BEEN MODIFIED FROM: ANSI D

Path: \\walnutcreek\acad\Sites\142-0152 WPWMA\PRODUCTION\ELECTRICAL\ | File Name: WPWMA FLARE E6A.dwg

APPENDIX B
ALTERNATIVES TO LANDFILL NEW SOURCE PERFORMANCE STANDARDS (NSPS) REQUIREMENTS

1 ALTERNATIVE TO LANDFILL NSPS REQUIREMENTS

> **§60.752(b)(2)(i)(B)** The collection and control system design plan shall include any alternatives to the operational standards, test methods, procedures, compliance measures, monitoring, record keeping or reporting provisions of §60.753 through §60.758 proposed by the owner or operator.

Pursuant to Code of Federal Regulations (CFR) Title 40 Part 60 (known as New Source Performance Standards [NSPS]) Section (§)60.752(b)(2)(i)(B), a landfill gas collection and control system (GCCS) design plan may include proposed alternative procedures to the operational standards, test methods, procedures, compliance measures, monitoring, record keeping and reporting provisions of §60.753 through §60.758 in the NSPS. This section of the landfill GCCS design plan report identifies proposed exemptions/alternatives to the NSPS.

1.1 Temporary Partial GCCS Shutdowns

From time to time during normal operation and maintenance of the GCCS, control valves in the collection system must be closed in order to isolate a portion of the system for troubleshooting, maintenance, or addition of new wells. During such periods, wells in the temporary closure area may exhibit positive pressure for the static reading on the wellhead and gas collection header. The WPWMA requests this flexibility and notes that these temporary events will be documented as Startup, Shutdown and Malfunction (SSM) events as defined in the site's SSM Plan with proper documentation.

Exclusion of Leachate System from Operating Parameters

> **§60.753(c)** Operational Standards: "Operate each interior wellhead in the collection system with a LFG temperature less than 55 degrees Celsius and with either a nitrogen level less than 20 percent or an oxygen level less than 5 percent. The owner or operator may establish a higher operating temperature, nitrogen, or oxygen value at a particular well. A higher operating value demonstration shall show supporting data that the elevated parameter does not cause fires or significantly inhibit anaerobic decomposition by killing methanogens."

The GCCS may include future connections to leachate manholes and cleanout risers to extract LFG from the leachate collection system for interim odor and surface emissions control. Industry experience at other NSPS sites shows that leachate collection manholes and cleanout risers sometimes contain concentrations of nitrogen and oxygen similar to that of ambient air, above the NSPS thresholds. This is due to the fact that the leachate collection system is not an air-tight vacuum system, and was not designed as such. However, it does

provide a valuable collection point for LFG, since LFG production tends to be heaviest in areas of moist refuse (such as that found directly above the leachate drainage layer).

Unlike the vertical gas extraction wells, the leachate manhole draws from the leachate collection system beneath the refuse. Therefore, concentrations of air within these extraction points will not cause subsurface oxidation within the refuse, as could potentially happen in a classic vertical extraction well within refuse. Therefore, WPWMA requests that the pressure and nitrogen/oxygen exceedance limits not apply to leachate cleanout risers and leachate manhole extraction points.

Determination of Oxygen Levels at Monitoring Points

> **§60.753(c)(2)** Operational Standards: "Unless an alternative test method is established as allowed by § 60.752(b)(2)(i) of this subpart, the oxygen shall be determined by an oxygen meter using Method 3A or 3C ... "

When applicable, WPWMA proposes to use a portable on-site multi-gas analyzer, in lieu of a laboratory method, for determining the oxygen content of the LFG at each vertical extraction well and monitoring point. The site will be using a portable meter, such as a Landtec GEM-2000 or equivalent, calibrated to the manufacturer's specifications, to determine the oxygen content of the LFG. This is acceptable to and has previously been approved by the USEPA.

Monitoring of Extraction Wells in Active Fill Areas

> **§60.755(a)(3)** Compliance Provisions: "For the purpose of demonstrating whether the gas collection system flow rate is sufficient to determine compliance with §60.752(b)(2)(ii)(A)(3), the owner or operator shall measure gauge pressure in the gas collection header at each individual well, monthly."
>
> **§60.755(a)(5)** Compliance Provisions: "For the purpose of identifying whether excess air infiltration into the landfill is occurring, the owner or operator shall monitor each well monthly for temperature and nitrogen or oxygen as provided in § 60.753(c)."
>
> **§60.756(a)** Monitoring of Operations: "Except as provided in §60.752(b)(2)(i)(B), Each owner or operator seeking to comply with §60.752(b)(2)(ii)(A) for an active gas collection system shall install a sampling port and a thermometer, other temperature measuring device, or an access port for temperature measurements at each wellhead and:
>
> (l) Measure the gauge pressure in the gas collection header on a monthly basis as provided in §60.755(a)(3); and
>
> (2) Monitor nitrogen or oxygen concentration in the LFG on a monthly basis as provided in §60.755(a)(5); and

> (3) Monitor temperature of the LFG on a monthly basis as provided in §60.755(a)(5)."

Future vertical extraction wells may be placed in the active areas several years before the waste has reached final elevation grades. This is in compliance with the NSPS. However, since the vertical extraction wells are placed in active areas, they periodically need to be "raised" (i.e., the well casing extended 15 feet to 25 feet vertically) in order to not be buried under lifts of waste. In such cases, the well is temporarily disconnected until the surrounding lift of waste is brought high enough to reconnect the well to the collection system. The time period between when a vertical extraction well is disconnected and raised, and when the waste height is high enough to reconnect the lateral pipeline riser, may range from a few weeks to a few months. This can result in missed monthly readings at the vertical extraction well, since the well casing is too high for the technician to safely reach.

Since the NSPS allows for exclusion of surface monitoring in "dangerous areas" of the site, WPWMA believes it is reasonable to request exclusion to monitoring the vertical extraction wells raised in active areas. WPWMA proposes that readings will be missed at a particular vertical extraction well, for up to two (2) months, as long as the vertical extraction well cannot be safely accessed. If WPWMA cannot bring the waste height up to the new grade and re-attach the vertical extraction well within a two (2) month period, then modifications to the lateral pipeline riser and wellhead assembly (such as the vertical extraction well being cut back down and re-attached) will be made for monitoring. This request is in accordance with §60.752(b)(2)(i)(B), which allows the operator to propose alternatives to the monitoring procedures in the NSPS.

Start-Up of New or Replacement Wells

> **§60.755(a)(4)** Compliance Provisions: "Owners or operators are not required to expand the system as required in paragraph (a)(3) of this section during the first 180 days after gas collection system startup."

Landfill GCCS are typically built in phases to accommodate for additional waste placement and occasionally require the installation of new or replacement vertical extraction wells due to settlement, damage, etc. Installation of one or a few new or replacement vertical extraction wells can cause challenges with balancing the entire system and therefore may require additional time to not only achieve negative pressure in all vertical extraction wells but to also maintain the operating standard for oxygen, nitrogen, and/or temperature.

Per 40 CFR §60.755(a)(4), the Landfill is not required to expand the system during the first 180 days after GCCS start-up where pressure exceedances were recorded at one or more vertical extraction wells. Given the wellfield balancing challenges, WPWMA proposes that the exemption from system expansion applies to any individual vertical extraction well or

series of vertical extraction wells associated with the new or replacement vertical extraction wells upon start-up.

2 ALTERNATIVE COMPLIANCE OPTIONS TO CALIFORNIA CODE OF REGULATIONS - PREVIOUSLY APPROVED

WPWMA previously submitted a proposal for alternative compliance options to CCR Title 17, Division 3, Chapter 1, Subchapter 10, Article 4, Subarticle 6 (Title 17) to the PCAPCD. PCAPCD responded and approved various alternatives in an August 7, 2012 letter. The approved alternatives are presented below.

Methane Destruction Compliance Parameter - Flares

> **CCR §95464(b)(2)(A)(4)** requires that an enclosed flare operated as a control device be operated within the parameter ranges established during the initial or most recent source test.

Approved alternative: PCAPCD believes that it is reasonable that there be a tolerance on the flare operating temperature. If the last source test were used as the minimum operating temperature, then the allowable flare temperature would continually ratchet up with subsequent flare tests. PCAPCD accepts the requested 50 degree Fahrenheit below source test request. However, flare temperature is not the only compliance parameter. The methane destruction efficiency of at least 99 percent by weight of 95464(B)(2)(A)(1) must be demonstrated by annual or triennial source test. PCAPCD plans to amend the flare permits to include the annual methane destruction test.

Source Test Methods

> **CCR §95464(b)(4)** requires annual compliance testing of the control devices specifies the use of the test methods identified in CCR 95471(f), as follows: USEPA Methods 18, 25, 25A, or 25C.

Approved alternative: PCAPCD intends to add to the flare permits the 99 percent methane destruction requirement and use the test methods required in the permits. So the SEM should state that the test methods are called out in the permits. The Landfill Regulation requires flare testing annually until the destruction limit is achieved three (3) years consecutively, and then the testing frequency can be extended to three (3) years. The testing frequency in PCAPCD permits is biennially. Once the three (3) consecutive years of meeting the methane destruction requirement is achieved, PCAPCD intends to require the methane testing biennially with the other flare testing.

Wellhead Pressure Requirements

> **CCR §95469(c)** requires corrective action if monthly wellhead pressure monitoring results in a positive pressure reading except as exempted in CCR 95464(d) (well raising) and CCR 95464(e) (temporary shutdown in order to repair the components, due to catastrophic events such as earthquakes, to connect new LFG collection system components to the existing system, to extinguish landfill fires, or to perform construction activities.)

Approved alternative: PCAPCD approved the WPWMA request to allow temporary exemption from well head pressure requirements due to potential subsurface oxidation, well damage, poor LFG quality, or other reasons as documented by the WPWMA not listed in §95469. The event is to be described to the PCAPCD in writing and PCAPCD must concur.

Wellhead Pressure Exceedance Corrective Action

> **CCR §95469(c)(2)** requires further corrective actions be initiated, including, but not limited to, any necessary expansion of the GCCS, to correct any positive pressure readings if positive pressure readings cannot be corrected within 15 days after the initial positive pressure reading. CCR 95469(c)(3) requires corrective action, including any necessary expansion of the GCCS, to correct any positive pressure readings within 120 days of the initial positive pressure reading.

Approved alternative: PCAPCD will consider requests for alternative engineering solutions to be evaluated and allow an alternative timeline to consider and implement alternative solutions. This will require concurrence by PCAPCD for the engineering study and implementation.

Wellhead Negative Pressure Requirements

> **CCR §95464(c)** requires that wellheads be operated under negative pressure except as noted in CCR 95464(c)(d) or (e).

Approved alternative: PCAPCD concurred with WPWMA's interpretation is that this applies to wells within the limit of the waste and not to perimeter wells or soil vapor extraction wells which are not in refuse and are not extracting LFG, consistent with the NSPS.

Continuous Routing of LFG/Operations of GCCS

> **CCR §95464(b)(1)(A)** requires that the owner or operator of a GCCCS "Route the collected gas to a gas control device or devices, and operate the gas collection and control system continuously except as provided in CCR 95464(d) and (e)".

Approved alternative: PCAPCD will accept WPWMA's interpretation, consistent with the NSPS, that GCCS downtime of less than five (5) days and/or control device downtime of less than one (1) hour not be considered reportable deviations, and therefore only subject to the SSM reporting requirements.

Surface Emissions Monitoring Requirements

The sections below present the alternatives approved by PCPAPCD in their August 7, 2012 letter for surface emissions monitoring requirements.

Areas Excluded from Collection and SEM

> **CCR §95464(a)(1)(F)(1)** allows any areas of the landfill that contain only asbestos-containing waste, inert waste, or non-decomposable solid waste may be excluded from collection.

Approved alternative: Any areas of the landfill that contain only asbestos-containing waste, inert waste or non-decomposable solid waste may be excluded from collection and SEM.

Areas Excluded from SEM Where Safety Issues Exist

> **CCR §95471(c)(1)** requires that **t**he entire landfill surface must be divided into individually identified 50,000 square foot grids. The grids must be used for both instantaneous and integrated SEM.

Approved alternative: PCAPCD accepts and allows the exclusion of areas of greater than 25 percent slope.

Re-monitoring After Instantaneous and Integrated Exceedances

> **CCR §95469(a)(1)(B) and (a)(2)(B)** require correct action be taken by the owner or operator require corrective action be taken by the owner or operator such as, but not limited to, cover maintenance or repair, or well vacuum adjustments and location re-monitored within ten calendar days of a measured exceedance of the instantaneous and/or integrated surface emission standards.

Approved alternative: PCAPCD will allow additional time for re-monitoring in cases where the area is dangerous or cannot be safely reached.

SEM Remediation after Third Instantaneous and/or Third Integrated SEM Exceedance

> **CCR §95469(a)(1)(B)(2) and (a)(2)(B)(2)** require the installation of a new or replacement well within 120 calendar days of detecting a third exceedance of the Instantaneous SEM limit of CCR 95465(a)(l) and/or the Integrated SEM limit of CCR 95465(a)(2).

Approved alternative: PCAPCD will allow other modifications than just additional wells, as appropriate, to correct exceedances. A corresponding alternative compliance timeline beyond 120 days will be allowed, as appropriate.

SEM Monitoring Height

> **CCR §95471(c)(1)(A)** requires that SEM be conducted by holding the probe within three (3) inches of the landfill surface while traversing the grid.

Approved alternative: If an area clear of surface vegetation cannot be found in the walking path, PCAPCD will allow the top of the vegetation to be considered the landfill surface and the probe be held within three inches vertical of the vegetation surface.

Wind Speed

> **CCR §95471(c)(1)(C)** requires that SEM must be terminated when the average wind speed exceeds file miles per hour or the instantaneous wind speed exceeds 10 miles per hour.

Approved alternative: PCAPCD will accept the alternative wind speeds of 10 miles per hour for average wind and 20 miles per hour for instantaneous wind speed.

Measurable Precipitation

> **CCR §95471(c)(1)(D)** requires that SEM must be conducted only when there has been no measurable precipitation in the preceding 72 hours.

Approved alternative: PCAPCD will allow SEM to be conducted only when there has been no measurable precipitation in the preceding 24 hours. WPWMA shall minimize the times when SEM is conducted with precipitation in the preceding 24 to 72 hours.

Grid Areas – Near Landfill Waste Boundaries

> **CCR §95471(c)(1)** requires that **t**he entire landfill surface must be divided into individually identified 50,000 square foot grids. The grids must be used for both instantaneous and integrated SEM.

Approved alternative: Since landfills are not sized in 50,000 square foot increments, PCAPCD will allow along waste area boundaries and around areas that cannot be subjected to SEM due to safety reasons, grid segments that are slightly larger or smaller than 50,000 square feet.

Closed Areas – Reduction to Annual SEM

> **CCR §95469(a)(3)** allows an owner or operator of a closed or inactive MSWQ landfill, or any closed or inactive areas on an active MSW landfill that can demonstrate that in the three years before the effective date of this subarticle that there were no measured exceedances of the limits specified in 95469 by annual or quarterly monitoring may monitor annually.

Approved alternative: PCAPCD will allow closed areas designated as Modules 1, 2, 10 and 11 to be tested annually. If an exceedance of the limits is measured, the testing of the affected area hall return to quarterly testing.

APPENDIX C

LANDGEM LANDFILL GAS EMISSIONS MODELING

Summary Report

Landfill Name or Identifier: Western Regional Sanitary Landfill

Date: Friday, October 28, 2016

Description/Comments:
LandGEM analysis for low food waste diversion case (34.5% food waste average after 2021)

About LandGEM:

First-Order Decomposition Rate Equation:

$$Q_{CH_4} = \sum_{i=1}^{n} \sum_{j=0.1}^{1} kL_o \left(\frac{M_i}{10} \right) e^{-kt_{ij}}$$

Where,

Q_{CH4} = annual methane generation in the year of the calculation ($m^3/year$)
i = 1-year time increment
n = (year of the calculation) - (initial year of waste acceptance)
j = 0.1-year time increment
k = methane generation rate ($year^{-1}$)
L_o = potential methane generation capacity (m^3/Mg)
M_i = mass of waste accepted in the ith year (Mg)
t_{ij} = age of the jth section of waste mass M_i accepted in the ith year (*decimal years*, e.g., 3.2 years)

LandGEM is based on a first-order decomposition rate equation for quantifying emissions from the decomposition of landfilled waste in municipal solid waste (MSW) landfills. The software provides a relatively simple approach to estimating landfill gas emissions. Model defaults are based on empirical data from U.S. landfills. Field test data can also be used in place of model defaults when available. Further guidance on EPA test methods, Clean Air Act (CAA) regulations, and other guidance regarding landfill gas emissions and control technology requirements can be found at http://www.epa.gov/ttnatw01/landfill/landflpg.html.

LandGEM is considered a screening tool — the better the input data, the better the estimates. Often, there are limitations with the available data regarding waste quantity and composition, variation in design and operating practices over time, and changes occurring over time that impact the emissions potential. Changes to landfill operation, such as operating under wet conditions through leachate recirculation or other liquid additions, will result in generating more gas at a faster rate. Defaults for estimating emissions for this type of operation are being developed to include in LandGEM along with defaults for convential landfills (no leachate or liquid additions) for developing emission inventories and determining CAA applicability. Refer to the Web site identified above for future updates.

Input Review

LANDFILL CHARACTERISTICS

Landfill Open Year	**1979**	
Landfill Closure Year (with 80-year limit)	**2056**	
Actual Closure Year (without limit)	***2056***	
Have Model Calculate Closure Year?	**No**	
Waste Design Capacity		*short tons*

MODEL PARAMETERS

Methane Generation Rate, k	**0.036**	$year^{-1}$
Potential Methane Generation Capacity, L_o	**116**	m^3/Mg
NMOC Concentration	**595**	*ppmv as hexane*
Methane Content	**50**	*% by volume*

GASES / POLLUTANTS SELECTED

Gas / Pollutant #1:	**Total landfill gas**
Gas / Pollutant #2:	**Methane**
Gas / Pollutant #3:	**Carbon dioxide**
Gas / Pollutant #4:	**NMOC**

WASTE ACCEPTANCE RATES

Year	Waste Accepted		Waste-In-Place	
	(Mg/year)	*(short tons/year)*	*(Mg)*	*(short tons)*
1979	1,610	1,771	0	0
1980	36,205	39,826	1,610	1,771
1981	37,272	40,999	37,815	41,597
1982	39,026	42,929	75,087	82,596
1983	66,034	72,637	114,114	125,525
1984	99,795	109,775	180,147	198,162
1985	116,264	127,890	279,943	307,937
1986	132,545	145,799	396,206	435,827
1987	140,678	154,746	528,751	581,626
1988	186,641	205,305	669,429	736,372
1989	170,483	187,531	856,070	941,677
1990	170,042	187,046	1,026,553	1,129,208
1991	166,837	183,521	1,196,595	1,316,254
1992	168,149	184,964	1,363,432	1,499,775
1993	171,245	188,370	1,531,581	1,684,739
1994	158,437	174,281	1,702,826	1,873,109
1995	165,445	181,989	1,861,264	2,047,390
1996	165,146	181,661	2,026,708	2,229,379
1997	160,968	177,065	2,191,855	2,411,040
1998	181,424	199,566	2,352,823	2,588,105
1999	202,045	222,250	2,534,246	2,787,671
2000	235,023	258,525	2,736,292	3,009,921
2001	249,346	274,281	2,971,315	3,268,446
2002	266,225	292,847	3,220,661	3,542,727
2003	227,683	250,451	3,486,885	3,835,574
2004	233,951	257,346	3,714,568	4,086,025
2005	244,051	268,456	3,948,519	4,343,371
2006	256,545	282,199	4,192,570	4,611,827
2007	242,057	266,263	4,449,115	4,894,027
2008	217,299	239,029	4,691,172	5,160,290
2009	200,534	220,587	4,908,472	5,399,319
2010	187,152	205,867	5,109,005	5,619,906
2011	189,136	208,050	5,296,157	5,825,773
2012	181,798	199,978	5,485,293	6,033,822
2013	194,106	213,516	5,667,091	6,233,800
2014	198,375	218,213	5,861,197	6,447,317
2015	212,976	234,274	6,059,572	6,665,530
2016	202,644	222,908	6,272,549	6,899,804
2017	201,331	221,464	6,475,192	7,122,712
2018	193,676	213,044	6,676,523	7,344,175

WASTE ACCEPTANCE RATES (Continued)

Year	Waste Accepted		Waste-In-Place	
	(Mg/year)	*(short tons/year)*	*(Mg)*	*(short tons)*
2019	196,484	216,133	6,870,199	7,557,219
2020	199,405	219,345	7,066,683	7,773,352
2021	203,097	223,406	7,266,088	7,992,697
2022	206,986	227,685	7,469,185	8,216,103
2023	210,951	232,046	7,676,171	8,443,788
2024	214,992	236,491	7,887,122	8,675,834
2025	219,112	241,023	8,102,114	8,912,325
2026	223,311	245,642	8,321,226	9,153,348
2027	227,592	250,351	8,544,537	9,398,991
2028	231,955	255,150	8,772,129	9,649,341
2029	236,403	260,043	9,004,084	9,904,492
2030	240,937	265,030	9,240,486	10,164,535
2031	245,558	270,114	9,481,423	10,429,565
2032	250,269	275,296	9,726,981	10,699,679
2033	255,072	280,579	9,977,250	10,974,976
2034	259,967	285,964	10,232,322	11,255,554
2035	264,957	291,453	10,492,289	11,541,518
2036	270,044	297,048	10,757,246	11,832,971
2037	275,229	302,752	11,027,290	12,130,019
2038	280,515	308,567	11,302,519	12,432,771
2039	285,903	314,494	11,583,034	12,741,338
2040	291,396	320,536	11,868,938	13,055,832
2041	296,995	326,695	12,160,334	13,376,367
2042	302,703	332,973	12,457,329	13,703,062
2043	308,521	339,373	12,760,032	14,036,035
2044	314,453	345,898	13,068,553	14,375,409
2045	320,499	352,549	13,383,006	14,721,306
2046	326,662	359,329	13,703,505	15,073,855
2047	332,945	366,240	14,030,167	15,433,184
2048	339,351	373,286	14,363,112	15,799,424
2049	345,880	380,468	14,702,463	16,172,709
2050	352,536	387,789	15,048,343	16,553,177
2051	359,321	395,253	15,400,879	16,940,967
2052	366,238	402,862	15,760,200	17,336,220
2053	373,289	410,618	16,126,438	17,739,082
2054	373,289	410,618	16,499,727	18,149,700
2055	373,289	410,618	16,873,017	18,560,318
2056	0	0	17,246,306	18,970,937
2057	0	0	17,246,306	18,970,937
2058	0	0	17,246,306	18,970,937

Pollutant Parameters

		Gas / Pollutant Default Parameters:		*User-specified Pollutant Parameters:*	
	Compound	Concentration (*ppmv*)	Molecular Weight	Concentration (*ppmv*)	Molecular Weight
Gases	Total landfill gas		0.00		
	Methane		16.04		
	Carbon dioxide		44.01		
	NMOC	4,000	86.18		
Pollutants	1,1,1-Trichloroethane (methyl chloroform) - HAP	0.48	133.41		
	1,1,2,2-Tetrachloroethane - HAP/VOC	1.1	167.85		
	1,1-Dichloroethane (ethylidene dichloride) - HAP/VOC	2.4	98.97		
	1,1-Dichloroethene (vinylidene chloride) - HAP/VOC	0.20	96.94		
	1,2-Dichloroethane (ethylene dichloride) - HAP/VOC	0.41	98.96		
	1,2-Dichloropropane (propylene dichloride) - HAP/VOC	0.18	112.99		
	2-Propanol (isopropyl alcohol) - VOC	50	60.11		
	Acetone	7.0	58.08		
	Acrylonitrile - HAP/VOC	6.3	53.06		
	Benzene - No or Unknown Co-disposal - HAP/VOC	1.9	78.11		
	Benzene - Co-disposal - HAP/VOC	11	78.11		
	Bromodichloromethane - VOC	3.1	163.83		
	Butane - VOC	5.0	58.12		
	Carbon disulfide - HAP/VOC	0.58	76.13		
	Carbon monoxide	140	28.01		
	Carbon tetrachloride - HAP/VOC	4.0E-03	153.84		
	Carbonyl sulfide - HAP/VOC	0.49	60.07		
	Chlorobenzene - HAP/VOC	0.25	112.56		
	Chlorodifluoromethane	1.3	86.47		
	Chloroethane (ethyl chloride) - HAP/VOC	1.3	64.52		
	Chloroform - HAP/VOC	0.03	119.39		
	Chloromethane - VOC	1.2	50.49		
	Dichlorobenzene - (HAP for para isomer/VOC)	0.21	147		
	Dichlorodifluoromethane	16	120.91		
	Dichlorofluoromethane - VOC	2.6	102.92		
	Dichloromethane (methylene chloride) - HAP	14	84.94		
	Dimethyl sulfide (methyl sulfide) - VOC	7.8	62.13		
	Ethane	890	30.07		
	Ethanol - VOC	27	46.08		

Pollutant Parameters (Continued)

		Gas / Pollutant Default Parameters:		*User-specified Pollutant Parameters:*	
	Compound	Concentration (*ppmv*)	Molecular Weight	Concentration (*ppmv*)	Molecular Weight
Pollutants	Ethyl mercaptan (ethanethiol) - VOC	2.3	62.13		
	Ethylbenzene - HAP/VOC	4.6	106.16		
	Ethylene dibromide - HAP/VOC	1.0E-03	187.88		
	Fluorotrichloromethane - VOC	0.76	137.38		
	Hexane - HAP/VOC	6.6	86.18		
	Hydrogen sulfide	36	34.08		
	Mercury (total) - HAP	2.9E-04	200.61		
	Methyl ethyl ketone - HAP/VOC	7.1	72.11		
	Methyl isobutyl ketone - HAP/VOC	1.9	100.16		
	Methyl mercaptan - VOC	2.5	48.11		
	Pentane - VOC	3.3	72.15		
	Perchloroethylene (tetrachloroethylene) - HAP	3.7	165.83		
	Propane - VOC	11	44.09		
	t-1,2-Dichloroethene - VOC	2.8	96.94		
	Toluene - No or Unknown Co-disposal - HAP/VOC	39	92.13		
	Toluene - Co-disposal - HAP/VOC	170	92.13		
	Trichloroethylene (trichloroethene) - HAP/VOC	2.8	131.40		
	Vinyl chloride - HAP/VOC	7.3	62.50		
	Xylenes - HAP/VOC	12	106.16		

Graphs

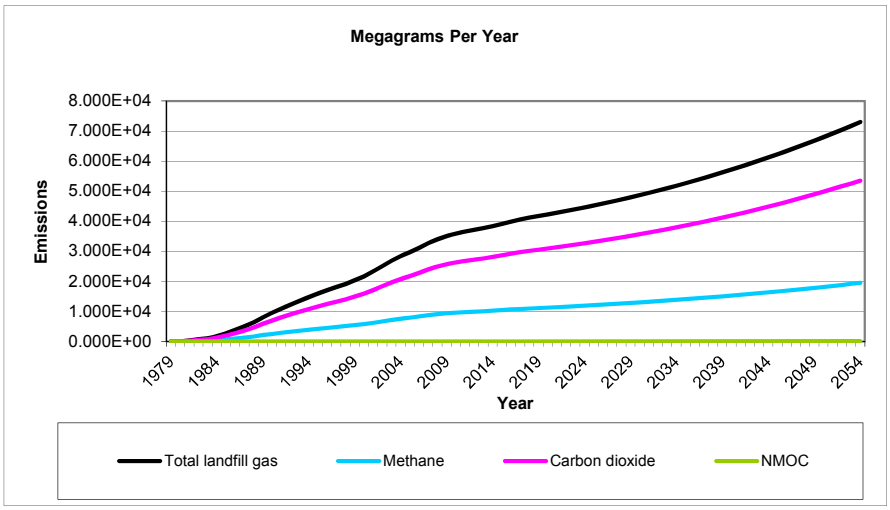
Megagrams Per Year
Emissions
8.000E+04
7.000E+04
6.000E+04
5.000E+04
4.000E+04
3.000E+04
2.000E+04
1.000E+04
0.000E+00
1979
1984
1989
1994
1999
2004
2009
2014
2019
2024
2029
2034
2039
2044
2049
2054
Year
Total landfill gas
Methane
Carbon dioxide
NMOC

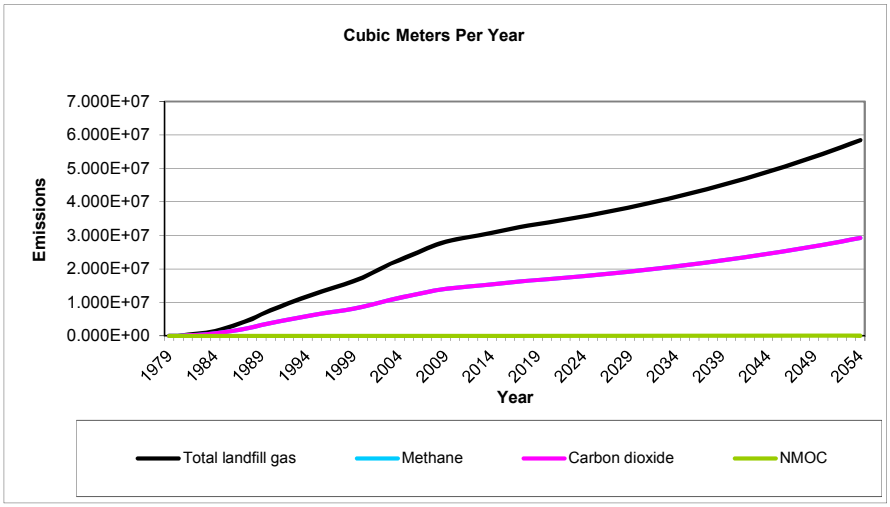
Cubic Meters Per Year
Emissions
7.000E+07
6.000E+07
5.000E+07
4.000E+07
3.000E+07
2.000E+07
1.000E+07
0.000E+00
1979
1984
1989
1994
1999
2004
2009
2014
2019
2024
2029
2034
2039
2044
2049
2054
Year
Total landfill gas
Methane
Carbon dioxide
NMOC

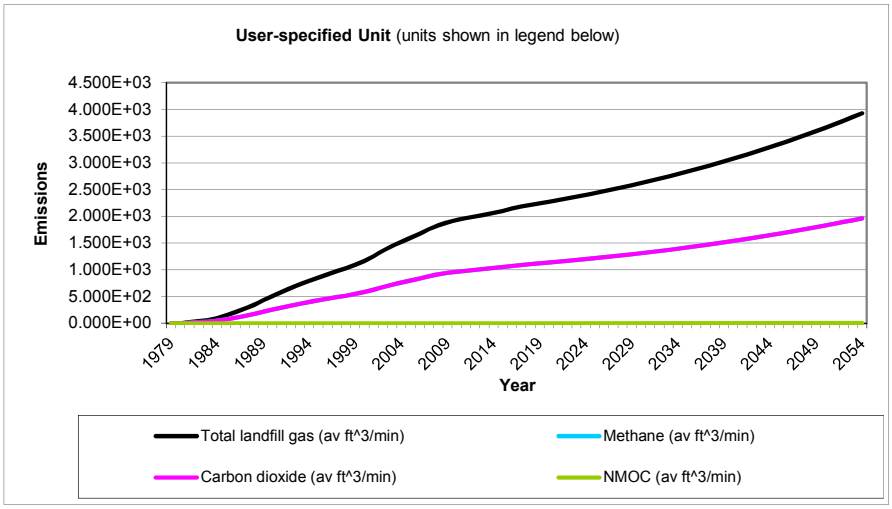
User-specified Unit (units shown in legend below)
Emissions
4.500E+03
4.000E+03
3.500E+03
3.000E+03
2.500E+03
2.000E+03
1.500E+03
1.000E+03
5.000E+02
0.000E+00
1979
1984
1989
1994
1999
2004
2009
2014
2019
2024
2029
2034
2039
2044
2049
2054
Year
Total landfill gas (av ft^3/min)
Methane (av ft^3/min)
Carbon dioxide (av ft^3/min)
NMOC (av ft^3/min)

Results

Year	Total landfill gas			Methane		
	(Mg/year)	*(m^3/year)*	*(av ft^3/min)*	*(Mg/year)*	*(m^3/year)*	*(av ft^3/min)*
1979	0	0	0	0	0	0
1980	1.654E+01	1.324E+04	8.898E-01	4.417E+00	6.621E+03	4.449E-01
1981	3.879E+02	3.106E+05	2.087E+01	1.036E+02	1.553E+05	1.043E+01
1982	7.570E+02	6.062E+05	4.073E+01	2.022E+02	3.031E+05	2.036E+01
1983	1.131E+03	9.057E+05	6.086E+01	3.021E+02	4.529E+05	3.043E+01
1984	1.769E+03	1.417E+06	9.520E+01	4.726E+02	7.084E+05	4.760E+01
1985	2.732E+03	2.188E+06	1.470E+02	7.297E+02	1.094E+06	7.349E+01
1986	3.830E+03	3.067E+06	2.060E+02	1.023E+03	1.533E+06	1.030E+02
1987	5.056E+03	4.048E+06	2.720E+02	1.350E+03	2.024E+06	1.360E+02
1988	6.322E+03	5.062E+06	3.401E+02	1.689E+03	2.531E+06	1.701E+02
1989	8.016E+03	6.418E+06	4.313E+02	2.141E+03	3.209E+06	2.156E+02
1990	9.483E+03	7.594E+06	5.102E+02	2.533E+03	3.797E+06	2.551E+02
1991	1.089E+04	8.724E+06	5.862E+02	2.910E+03	4.362E+06	2.931E+02
1992	1.222E+04	9.788E+06	6.576E+02	3.265E+03	4.894E+06	3.288E+02
1993	1.352E+04	1.082E+07	7.273E+02	3.611E+03	5.412E+06	3.637E+02
1994	1.480E+04	1.185E+07	7.962E+02	3.953E+03	5.925E+06	3.981E+02
1995	1.590E+04	1.273E+07	8.556E+02	4.248E+03	6.367E+06	4.278E+02
1996	1.704E+04	1.365E+07	9.168E+02	4.552E+03	6.823E+06	4.584E+02
1997	1.813E+04	1.452E+07	9.757E+02	4.844E+03	7.261E+06	4.878E+02
1998	1.915E+04	1.533E+07	1.030E+03	5.114E+03	7.666E+06	5.151E+02
1999	2.033E+04	1.628E+07	1.094E+03	5.431E+03	8.141E+06	5.470E+02
2000	2.169E+04	1.737E+07	1.167E+03	5.794E+03	8.684E+06	5.835E+02
2001	2.334E+04	1.869E+07	1.256E+03	6.233E+03	9.343E+06	6.278E+02
2002	2.507E+04	2.008E+07	1.349E+03	6.697E+03	1.004E+07	6.745E+02
2003	2.692E+04	2.156E+07	1.448E+03	7.191E+03	1.078E+07	7.242E+02
2004	2.831E+04	2.267E+07	1.523E+03	7.561E+03	1.133E+07	7.615E+02
2005	2.971E+04	2.379E+07	1.598E+03	7.936E+03	1.190E+07	7.992E+02
2006	3.117E+04	2.496E+07	1.677E+03	8.325E+03	1.248E+07	8.384E+02
2007	3.270E+04	2.618E+07	1.759E+03	8.734E+03	1.309E+07	8.797E+02
2008	3.403E+04	2.725E+07	1.831E+03	9.090E+03	1.362E+07	9.154E+02
2009	3.506E+04	2.807E+07	1.886E+03	9.364E+03	1.404E+07	9.431E+02
2010	3.588E+04	2.873E+07	1.930E+03	9.584E+03	1.436E+07	9.652E+02
2011	3.653E+04	2.925E+07	1.966E+03	9.758E+03	1.463E+07	9.828E+02
2012	3.718E+04	2.977E+07	2.001E+03	9.932E+03	1.489E+07	1.000E+03
2013	3.774E+04	3.022E+07	2.030E+03	1.008E+04	1.511E+07	1.015E+03
2014	3.840E+04	3.075E+07	2.066E+03	1.026E+04	1.537E+07	1.033E+03
2015	3.908E+04	3.129E+07	2.102E+03	1.044E+04	1.564E+07	1.051E+03
2016	3.988E+04	3.194E+07	2.146E+03	1.065E+04	1.597E+07	1.073E+03
2017	4.055E+04	3.247E+07	2.182E+03	1.083E+04	1.624E+07	1.091E+03
2018	4.119E+04	3.298E+07	2.216E+03	1.100E+04	1.649E+07	1.108E+03
2019	4.172E+04	3.341E+07	2.245E+03	1.114E+04	1.670E+07	1.122E+03
2020	4.226E+04	3.384E+07	2.274E+03	1.129E+04	1.692E+07	1.137E+03
2021	4.282E+04	3.429E+07	2.304E+03	1.144E+04	1.714E+07	1.152E+03
2022	4.339E+04	3.474E+07	2.334E+03	1.159E+04	1.737E+07	1.167E+03
2023	4.398E+04	3.522E+07	2.366E+03	1.175E+04	1.761E+07	1.183E+03
2024	4.459E+04	3.571E+07	2.399E+03	1.191E+04	1.785E+07	1.200E+03
2025	4.522E+04	3.621E+07	2.433E+03	1.208E+04	1.811E+07	1.217E+03
2026	4.588E+04	3.674E+07	2.468E+03	1.225E+04	1.837E+07	1.234E+03
2027	4.655E+04	3.727E+07	2.504E+03	1.243E+04	1.864E+07	1.252E+03
2028	4.724E+04	3.783E+07	2.542E+03	1.262E+04	1.891E+07	1.271E+03

Results (Continued)

Year	Total landfill gas			Methane		
	(Mg/year)	*(m^3/year)*	*(av ft^3/min)*	*(Mg/year)*	*(m^3/year)*	*(av ft^3/min)*
2029	4.795E+04	3.840E+07	2.580E+03	1.281E+04	1.920E+07	1.290E+03
2030	4.868E+04	3.898E+07	2.619E+03	1.300E+04	1.949E+07	1.310E+03
2031	4.944E+04	3.959E+07	2.660E+03	1.321E+04	1.979E+07	1.330E+03
2032	5.021E+04	4.021E+07	2.702E+03	1.341E+04	2.010E+07	1.351E+03
2033	5.101E+04	4.084E+07	2.744E+03	1.362E+04	2.042E+07	1.372E+03
2034	5.182E+04	4.150E+07	2.788E+03	1.384E+04	2.075E+07	1.394E+03
2035	5.266E+04	4.217E+07	2.833E+03	1.407E+04	2.108E+07	1.417E+03
2036	5.352E+04	4.286E+07	2.880E+03	1.430E+04	2.143E+07	1.440E+03
2037	5.440E+04	4.356E+07	2.927E+03	1.453E+04	2.178E+07	1.464E+03
2038	5.531E+04	4.429E+07	2.976E+03	1.477E+04	2.214E+07	1.488E+03
2039	5.623E+04	4.503E+07	3.025E+03	1.502E+04	2.251E+07	1.513E+03
2040	5.718E+04	4.579E+07	3.076E+03	1.527E+04	2.289E+07	1.538E+03
2041	5.815E+04	4.657E+07	3.129E+03	1.553E+04	2.328E+07	1.564E+03
2042	5.915E+04	4.736E+07	3.182E+03	1.580E+04	2.368E+07	1.591E+03
2043	6.016E+04	4.818E+07	3.237E+03	1.607E+04	2.409E+07	1.618E+03
2044	6.121E+04	4.901E+07	3.293E+03	1.635E+04	2.451E+07	1.647E+03
2045	6.227E+04	4.986E+07	3.350E+03	1.663E+04	2.493E+07	1.675E+03
2046	6.336E+04	5.074E+07	3.409E+03	1.692E+04	2.537E+07	1.705E+03
2047	6.448E+04	5.163E+07	3.469E+03	1.722E+04	2.582E+07	1.735E+03
2048	6.562E+04	5.254E+07	3.530E+03	1.753E+04	2.627E+07	1.765E+03
2049	6.678E+04	5.348E+07	3.593E+03	1.784E+04	2.674E+07	1.797E+03
2050	6.797E+04	5.443E+07	3.657E+03	1.816E+04	2.722E+07	1.829E+03
2051	6.919E+04	5.541E+07	3.723E+03	1.848E+04	2.770E+07	1.861E+03
2052	7.044E+04	5.640E+07	3.790E+03	1.881E+04	2.820E+07	1.895E+03
2053	7.171E+04	5.742E+07	3.858E+03	1.915E+04	2.871E+07	1.929E+03
2054	7.301E+04	5.846E+07	3.928E+03	1.950E+04	2.923E+07	1.964E+03
2055	7.426E+04	5.946E+07	3.995E+03	1.984E+04	2.973E+07	1.998E+03
2056	7.547E+04	6.043E+07	4.060E+03	2.016E+04	3.022E+07	2.030E+03
2057	7.280E+04	5.829E+07	3.917E+03	1.945E+04	2.915E+07	1.958E+03
2058	7.023E+04	5.623E+07	3.778E+03	1.876E+04	2.812E+07	1.889E+03
2059	6.774E+04	5.424E+07	3.645E+03	1.809E+04	2.712E+07	1.822E+03
2060	6.535E+04	5.233E+07	3.516E+03	1.745E+04	2.616E+07	1.758E+03
2061	6.304E+04	5.048E+07	3.392E+03	1.684E+04	2.524E+07	1.696E+03
2062	6.081E+04	4.869E+07	3.272E+03	1.624E+04	2.435E+07	1.636E+03
2063	5.866E+04	4.697E+07	3.156E+03	1.567E+04	2.348E+07	1.578E+03
2064	5.658E+04	4.531E+07	3.044E+03	1.511E+04	2.265E+07	1.522E+03
2065	5.458E+04	4.371E+07	2.937E+03	1.458E+04	2.185E+07	1.468E+03
2066	5.265E+04	4.216E+07	2.833E+03	1.406E+04	2.108E+07	1.416E+03
2067	5.079E+04	4.067E+07	2.733E+03	1.357E+04	2.034E+07	1.366E+03
2068	4.899E+04	3.923E+07	2.636E+03	1.309E+04	1.962E+07	1.318E+03
2069	4.726E+04	3.785E+07	2.543E+03	1.262E+04	1.892E+07	1.271E+03
2070	4.559E+04	3.651E+07	2.453E+03	1.218E+04	1.825E+07	1.226E+03
2071	4.398E+04	3.522E+07	2.366E+03	1.175E+04	1.761E+07	1.183E+03
2072	4.242E+04	3.397E+07	2.283E+03	1.133E+04	1.699E+07	1.141E+03
2073	4.092E+04	3.277E+07	2.202E+03	1.093E+04	1.638E+07	1.101E+03
2074	3.948E+04	3.161E+07	2.124E+03	1.054E+04	1.581E+07	1.062E+03
2075	3.808E+04	3.049E+07	2.049E+03	1.017E+04	1.525E+07	1.024E+03
2076	3.673E+04	2.942E+07	1.976E+03	9.812E+03	1.471E+07	9.882E+02
2077	3.544E+04	2.837E+07	1.907E+03	9.465E+03	1.419E+07	9.533E+02
2078	3.418E+04	2.737E+07	1.839E+03	9.130E+03	1.369E+07	9.195E+02
2079	3.297E+04	2.640E+07	1.774E+03	8.808E+03	1.320E+07	8.870E+02

Results (Continued)

Year	Total landfill gas			Methane		
	(Mg/year)	*(m^3/year)*	*(av ft^3/min)*	*(Mg/year)*	*(m^3/year)*	*(av ft^3/min)*
2080	3.181E+04	2.547E+07	1.711E+03	8.496E+03	1.274E+07	8.557E+02
2081	3.068E+04	2.457E+07	1.651E+03	8.196E+03	1.228E+07	8.254E+02
2082	2.960E+04	2.370E+07	1.592E+03	7.906E+03	1.185E+07	7.962E+02
2083	2.855E+04	2.286E+07	1.536E+03	7.626E+03	1.143E+07	7.681E+02
2084	2.754E+04	2.205E+07	1.482E+03	7.357E+03	1.103E+07	7.409E+02
2085	2.657E+04	2.127E+07	1.429E+03	7.097E+03	1.064E+07	7.147E+02
2086	2.563E+04	2.052E+07	1.379E+03	6.846E+03	1.026E+07	6.894E+02
2087	2.472E+04	1.980E+07	1.330E+03	6.604E+03	9.898E+06	6.651E+02
2088	2.385E+04	1.910E+07	1.283E+03	6.370E+03	9.548E+06	6.415E+02
2089	2.300E+04	1.842E+07	1.238E+03	6.145E+03	9.211E+06	6.189E+02
2090	2.219E+04	1.777E+07	1.194E+03	5.928E+03	8.885E+06	5.970E+02
2091	2.141E+04	1.714E+07	1.152E+03	5.718E+03	8.571E+06	5.759E+02
2092	2.065E+04	1.654E+07	1.111E+03	5.516E+03	8.268E+06	5.555E+02
2093	1.992E+04	1.595E+07	1.072E+03	5.321E+03	7.975E+06	5.359E+02
2094	1.922E+04	1.539E+07	1.034E+03	5.133E+03	7.693E+06	5.169E+02
2095	1.854E+04	1.484E+07	9.973E+02	4.951E+03	7.421E+06	4.986E+02
2096	1.788E+04	1.432E+07	9.620E+02	4.776E+03	7.159E+06	4.810E+02
2097	1.725E+04	1.381E+07	9.280E+02	4.607E+03	6.906E+06	4.640E+02
2098	1.664E+04	1.332E+07	8.952E+02	4.444E+03	6.662E+06	4.476E+02
2099	1.605E+04	1.285E+07	8.635E+02	4.287E+03	6.426E+06	4.318E+02
2100	1.548E+04	1.240E+07	8.330E+02	4.136E+03	6.199E+06	4.165E+02
2101	1.494E+04	1.196E+07	8.035E+02	3.989E+03	5.980E+06	4.018E+02
2102	1.441E+04	1.154E+07	7.751E+02	3.848E+03	5.768E+06	3.876E+02
2103	1.390E+04	1.113E+07	7.477E+02	3.712E+03	5.564E+06	3.739E+02
2104	1.341E+04	1.073E+07	7.213E+02	3.581E+03	5.367E+06	3.606E+02
2105	1.293E+04	1.036E+07	6.958E+02	3.454E+03	5.178E+06	3.479E+02
2106	1.247E+04	9.989E+06	6.712E+02	3.332E+03	4.995E+06	3.356E+02
2107	1.203E+04	9.636E+06	6.474E+02	3.214E+03	4.818E+06	3.237E+02
2108	1.161E+04	9.295E+06	6.245E+02	3.101E+03	4.648E+06	3.123E+02
2109	1.120E+04	8.967E+06	6.025E+02	2.991E+03	4.483E+06	3.012E+02
2110	1.080E+04	8.650E+06	5.812E+02	2.885E+03	4.325E+06	2.906E+02
2111	1.042E+04	8.344E+06	5.606E+02	2.783E+03	4.172E+06	2.803E+02
2112	1.005E+04	8.049E+06	5.408E+02	2.685E+03	4.024E+06	2.704E+02
2113	9.696E+03	7.764E+06	5.217E+02	2.590E+03	3.882E+06	2.608E+02
2114	9.353E+03	7.490E+06	5.032E+02	2.498E+03	3.745E+06	2.516E+02
2115	9.022E+03	7.225E+06	4.854E+02	2.410E+03	3.612E+06	2.427E+02
2116	8.703E+03	6.969E+06	4.683E+02	2.325E+03	3.485E+06	2.341E+02
2117	8.396E+03	6.723E+06	4.517E+02	2.243E+03	3.361E+06	2.259E+02
2118	8.099E+03	6.485E+06	4.357E+02	2.163E+03	3.243E+06	2.179E+02
2119	7.812E+03	6.256E+06	4.203E+02	2.087E+03	3.128E+06	2.102E+02

Results (Continued)

Year	Carbon dioxide			NMOC		
	(Mg/year)	*(m^3/year)*	*(av ft^3/min)*	*(Mg/year)*	*(m^3/year)*	*(av ft^3/min)*
1979	0	0	0	0	0	0
1980	1.212E+01	6.621E+03	4.449E-01	2.824E-02	7.879E+00	5.294E-04
1981	2.843E+02	1.553E+05	1.043E+01	6.624E-01	1.848E+02	1.242E-02
1982	5.548E+02	3.031E+05	2.036E+01	1.293E+00	3.607E+02	2.423E-02
1983	8.290E+02	4.529E+05	3.043E+01	1.932E+00	5.389E+02	3.621E-02
1984	1.297E+03	7.084E+05	4.760E+01	3.022E+00	8.430E+02	5.664E-02
1985	2.002E+03	1.094E+06	7.349E+01	4.666E+00	1.302E+03	8.746E-02
1986	2.807E+03	1.533E+06	1.030E+02	6.540E+00	1.825E+03	1.226E-01
1987	3.705E+03	2.024E+06	1.360E+02	8.634E+00	2.409E+03	1.618E-01
1988	4.633E+03	2.531E+06	1.701E+02	1.080E+01	3.012E+03	2.024E-01
1989	5.875E+03	3.209E+06	2.156E+02	1.369E+01	3.819E+03	2.566E-01
1990	6.950E+03	3.797E+06	2.551E+02	1.620E+01	4.518E+03	3.036E-01
1991	7.985E+03	4.362E+06	2.931E+02	1.861E+01	5.191E+03	3.488E-01
1992	8.958E+03	4.894E+06	3.288E+02	2.087E+01	5.824E+03	3.913E-01
1993	9.907E+03	5.412E+06	3.637E+02	2.309E+01	6.441E+03	4.328E-01
1994	1.085E+04	5.925E+06	3.981E+02	2.527E+01	7.051E+03	4.738E-01
1995	1.166E+04	6.367E+06	4.278E+02	2.716E+01	7.577E+03	5.091E-01
1996	1.249E+04	6.823E+06	4.584E+02	2.910E+01	8.119E+03	5.455E-01
1997	1.329E+04	7.261E+06	4.878E+02	3.097E+01	8.640E+03	5.805E-01
1998	1.403E+04	7.666E+06	5.151E+02	3.270E+01	9.122E+03	6.129E-01
1999	1.490E+04	8.141E+06	5.470E+02	3.473E+01	9.688E+03	6.509E-01
2000	1.590E+04	8.684E+06	5.835E+02	3.704E+01	1.033E+04	6.943E-01
2001	1.710E+04	9.343E+06	6.278E+02	3.985E+01	1.112E+04	7.471E-01
2002	1.838E+04	1.004E+07	6.745E+02	4.282E+01	1.195E+04	8.026E-01
2003	1.973E+04	1.078E+07	7.242E+02	4.598E+01	1.283E+04	8.618E-01
2004	2.075E+04	1.133E+07	7.615E+02	4.834E+01	1.349E+04	9.062E-01
2005	2.177E+04	1.190E+07	7.992E+02	5.074E+01	1.416E+04	9.511E-01
2006	2.284E+04	1.248E+07	8.384E+02	5.323E+01	1.485E+04	9.977E-01
2007	2.397E+04	1.309E+07	8.797E+02	5.584E+01	1.558E+04	1.047E+00
2008	2.494E+04	1.362E+07	9.154E+02	5.812E+01	1.621E+04	1.089E+00
2009	2.569E+04	1.404E+07	9.431E+02	5.987E+01	1.670E+04	1.122E+00
2010	2.630E+04	1.436E+07	9.652E+02	6.127E+01	1.709E+04	1.149E+00
2011	2.677E+04	1.463E+07	9.828E+02	6.239E+01	1.741E+04	1.169E+00
2012	2.725E+04	1.489E+07	1.000E+03	6.350E+01	1.772E+04	1.190E+00
2013	2.766E+04	1.511E+07	1.015E+03	6.445E+01	1.798E+04	1.208E+00
2014	2.814E+04	1.537E+07	1.033E+03	6.557E+01	1.829E+04	1.229E+00
2015	2.864E+04	1.564E+07	1.051E+03	6.673E+01	1.862E+04	1.251E+00
2016	2.923E+04	1.597E+07	1.073E+03	6.811E+01	1.900E+04	1.277E+00
2017	2.972E+04	1.624E+07	1.091E+03	6.926E+01	1.932E+04	1.298E+00
2018	3.019E+04	1.649E+07	1.108E+03	7.034E+01	1.962E+04	1.319E+00
2019	3.058E+04	1.670E+07	1.122E+03	7.125E+01	1.988E+04	1.336E+00
2020	3.097E+04	1.692E+07	1.137E+03	7.218E+01	2.014E+04	1.353E+00
2021	3.138E+04	1.714E+07	1.152E+03	7.312E+01	2.040E+04	1.371E+00
2022	3.180E+04	1.737E+07	1.167E+03	7.410E+01	2.067E+04	1.389E+00
2023	3.223E+04	1.761E+07	1.183E+03	7.511E+01	2.095E+04	1.408E+00
2024	3.268E+04	1.785E+07	1.200E+03	7.616E+01	2.125E+04	1.428E+00
2025	3.314E+04	1.811E+07	1.217E+03	7.724E+01	2.155E+04	1.448E+00
2026	3.362E+04	1.837E+07	1.234E+03	7.835E+01	2.186E+04	1.469E+00
2027	3.411E+04	1.864E+07	1.252E+03	7.949E+01	2.218E+04	1.490E+00
2028	3.462E+04	1.891E+07	1.271E+03	8.068E+01	2.251E+04	1.512E+00

Results (Continued)

Year	Carbon dioxide			NMOC		
	(Mg/year)	*(m^3/year)*	*(av ft^3/min)*	*(Mg/year)*	*(m^3/year)*	*(av ft^3/min)*
2029	3.514E+04	1.920E+07	1.290E+03	8.189E+01	2.285E+04	1.535E+00
2030	3.568E+04	1.949E+07	1.310E+03	8.314E+01	2.320E+04	1.559E+00
2031	3.623E+04	1.979E+07	1.330E+03	8.443E+01	2.355E+04	1.583E+00
2032	3.680E+04	2.010E+07	1.351E+03	8.575E+01	2.392E+04	1.607E+00
2033	3.738E+04	2.042E+07	1.372E+03	8.711E+01	2.430E+04	1.633E+00
2034	3.798E+04	2.075E+07	1.394E+03	8.851E+01	2.469E+04	1.659E+00
2035	3.860E+04	2.108E+07	1.417E+03	8.994E+01	2.509E+04	1.686E+00
2036	3.923E+04	2.143E+07	1.440E+03	9.140E+01	2.550E+04	1.713E+00
2037	3.987E+04	2.178E+07	1.464E+03	9.291E+01	2.592E+04	1.742E+00
2038	4.053E+04	2.214E+07	1.488E+03	9.445E+01	2.635E+04	1.770E+00
2039	4.121E+04	2.251E+07	1.513E+03	9.603E+01	2.679E+04	1.800E+00
2040	4.191E+04	2.289E+07	1.538E+03	9.765E+01	2.724E+04	1.830E+00
2041	4.262E+04	2.328E+07	1.564E+03	9.931E+01	2.771E+04	1.862E+00
2042	4.335E+04	2.368E+07	1.591E+03	1.010E+02	2.818E+04	1.893E+00
2043	4.409E+04	2.409E+07	1.618E+03	1.027E+02	2.867E+04	1.926E+00
2044	4.486E+04	2.451E+07	1.647E+03	1.045E+02	2.916E+04	1.959E+00
2045	4.564E+04	2.493E+07	1.675E+03	1.063E+02	2.967E+04	1.993E+00
2046	4.644E+04	2.537E+07	1.705E+03	1.082E+02	3.019E+04	2.028E+00
2047	4.725E+04	2.582E+07	1.735E+03	1.101E+02	3.072E+04	2.064E+00
2048	4.809E+04	2.627E+07	1.765E+03	1.121E+02	3.126E+04	2.101E+00
2049	4.894E+04	2.674E+07	1.797E+03	1.141E+02	3.182E+04	2.138E+00
2050	4.982E+04	2.722E+07	1.829E+03	1.161E+02	3.239E+04	2.176E+00
2051	5.071E+04	2.770E+07	1.861E+03	1.182E+02	3.297E+04	2.215E+00
2052	5.162E+04	2.820E+07	1.895E+03	1.203E+02	3.356E+04	2.255E+00
2053	5.255E+04	2.871E+07	1.929E+03	1.225E+02	3.417E+04	2.296E+00
2054	5.351E+04	2.923E+07	1.964E+03	1.247E+02	3.478E+04	2.337E+00
2055	5.442E+04	2.973E+07	1.998E+03	1.268E+02	3.538E+04	2.377E+00
2056	5.531E+04	3.022E+07	2.030E+03	1.289E+02	3.596E+04	2.416E+00
2057	5.335E+04	2.915E+07	1.958E+03	1.243E+02	3.469E+04	2.330E+00
2058	5.147E+04	2.812E+07	1.889E+03	1.199E+02	3.346E+04	2.248E+00
2059	4.965E+04	2.712E+07	1.822E+03	1.157E+02	3.228E+04	2.169E+00
2060	4.789E+04	2.616E+07	1.758E+03	1.116E+02	3.113E+04	2.092E+00
2061	4.620E+04	2.524E+07	1.696E+03	1.077E+02	3.003E+04	2.018E+00
2062	4.457E+04	2.435E+07	1.636E+03	1.038E+02	2.897E+04	1.947E+00
2063	4.299E+04	2.348E+07	1.578E+03	1.002E+02	2.795E+04	1.878E+00
2064	4.147E+04	2.265E+07	1.522E+03	9.663E+01	2.696E+04	1.811E+00
2065	4.000E+04	2.185E+07	1.468E+03	9.322E+01	2.601E+04	1.747E+00
2066	3.859E+04	2.108E+07	1.416E+03	8.992E+01	2.509E+04	1.686E+00
2067	3.722E+04	2.034E+07	1.366E+03	8.674E+01	2.420E+04	1.626E+00
2068	3.591E+04	1.962E+07	1.318E+03	8.367E+01	2.334E+04	1.568E+00
2069	3.464E+04	1.892E+07	1.271E+03	8.071E+01	2.252E+04	1.513E+00
2070	3.341E+04	1.825E+07	1.226E+03	7.786E+01	2.172E+04	1.459E+00
2071	3.223E+04	1.761E+07	1.183E+03	7.511E+01	2.095E+04	1.408E+00
2072	3.109E+04	1.699E+07	1.141E+03	7.245E+01	2.021E+04	1.358E+00
2073	2.999E+04	1.638E+07	1.101E+03	6.989E+01	1.950E+04	1.310E+00
2074	2.893E+04	1.581E+07	1.062E+03	6.742E+01	1.881E+04	1.264E+00
2075	2.791E+04	1.525E+07	1.024E+03	6.503E+01	1.814E+04	1.219E+00
2076	2.692E+04	1.471E+07	9.882E+02	6.274E+01	1.750E+04	1.176E+00
2077	2.597E+04	1.419E+07	9.533E+02	6.052E+01	1.688E+04	1.134E+00
2078	2.505E+04	1.369E+07	9.195E+02	5.838E+01	1.629E+04	1.094E+00
2079	2.417E+04	1.320E+07	8.870E+02	5.631E+01	1.571E+04	1.056E+00

Results (Continued)

Year	Carbon dioxide			NMOC		
	(Mg/year)	*(m^3/year)*	*(av ft^3/min)*	*(Mg/year)*	*(m^3/year)*	*(av ft^3/min)*
2080	2.331E+04	1.274E+07	8.557E+02	5.432E+01	1.515E+04	1.018E+00
2081	2.249E+04	1.228E+07	8.254E+02	5.240E+01	1.462E+04	9.822E-01
2082	2.169E+04	1.185E+07	7.962E+02	5.055E+01	1.410E+04	9.475E-01
2083	2.093E+04	1.143E+07	7.681E+02	4.876E+01	1.360E+04	9.140E-01
2084	2.019E+04	1.103E+07	7.409E+02	4.704E+01	1.312E+04	8.817E-01
2085	1.947E+04	1.064E+07	7.147E+02	4.537E+01	1.266E+04	8.505E-01
2086	1.878E+04	1.026E+07	6.894E+02	4.377E+01	1.221E+04	8.204E-01
2087	1.812E+04	9.898E+06	6.651E+02	4.222E+01	1.178E+04	7.914E-01
2088	1.748E+04	9.548E+06	6.415E+02	4.073E+01	1.136E+04	7.634E-01
2089	1.686E+04	9.211E+06	6.189E+02	3.929E+01	1.096E+04	7.364E-01
2090	1.626E+04	8.885E+06	5.970E+02	3.790E+01	1.057E+04	7.104E-01
2091	1.569E+04	8.571E+06	5.759E+02	3.656E+01	1.020E+04	6.853E-01
2092	1.513E+04	8.268E+06	5.555E+02	3.527E+01	9.839E+03	6.611E-01
2093	1.460E+04	7.975E+06	5.359E+02	3.402E+01	9.491E+03	6.377E-01
2094	1.408E+04	7.693E+06	5.169E+02	3.282E+01	9.155E+03	6.151E-01
2095	1.358E+04	7.421E+06	4.986E+02	3.166E+01	8.831E+03	5.934E-01
2096	1.310E+04	7.159E+06	4.810E+02	3.054E+01	8.519E+03	5.724E-01
2097	1.264E+04	6.906E+06	4.640E+02	2.946E+01	8.218E+03	5.522E-01
2098	1.219E+04	6.662E+06	4.476E+02	2.842E+01	7.927E+03	5.326E-01
2099	1.176E+04	6.426E+06	4.318E+02	2.741E+01	7.647E+03	5.138E-01
2100	1.135E+04	6.199E+06	4.165E+02	2.644E+01	7.377E+03	4.956E-01
2101	1.095E+04	5.980E+06	4.018E+02	2.551E+01	7.116E+03	4.781E-01
2102	1.056E+04	5.768E+06	3.876E+02	2.460E+01	6.864E+03	4.612E-01
2103	1.019E+04	5.564E+06	3.739E+02	2.373E+01	6.621E+03	4.449E-01
2104	9.825E+03	5.367E+06	3.606E+02	2.290E+01	6.387E+03	4.292E-01
2105	9.478E+03	5.178E+06	3.479E+02	2.209E+01	6.161E+03	4.140E-01
2106	9.143E+03	4.995E+06	3.356E+02	2.130E+01	5.944E+03	3.993E-01
2107	8.819E+03	4.818E+06	3.237E+02	2.055E+01	5.733E+03	3.852E-01
2108	8.508E+03	4.648E+06	3.123E+02	1.982E+01	5.531E+03	3.716E-01
2109	8.207E+03	4.483E+06	3.012E+02	1.912E+01	5.335E+03	3.585E-01
2110	7.916E+03	4.325E+06	2.906E+02	1.845E+01	5.146E+03	3.458E-01
2111	7.637E+03	4.172E+06	2.803E+02	1.780E+01	4.965E+03	3.336E-01
2112	7.367E+03	4.024E+06	2.704E+02	1.717E+01	4.789E+03	3.218E-01
2113	7.106E+03	3.882E+06	2.608E+02	1.656E+01	4.620E+03	3.104E-01
2114	6.855E+03	3.745E+06	2.516E+02	1.597E+01	4.456E+03	2.994E-01
2115	6.612E+03	3.612E+06	2.427E+02	1.541E+01	4.299E+03	2.888E-01
2116	6.379E+03	3.485E+06	2.341E+02	1.486E+01	4.147E+03	2.786E-01
2117	6.153E+03	3.361E+06	2.259E+02	1.434E+01	4.000E+03	2.688E-01
2118	5.935E+03	3.243E+06	2.179E+02	1.383E+01	3.859E+03	2.593E-01
2119	5.726E+03	3.128E+06	2.102E+02	1.334E+01	3.722E+03	2.501E-01

APPENDIX D

LANDFILL METHANE RULE (LMR) SURFACE EMISSIONS MONITORING PLAN

cornerstone
A TETRA TECH COMPANY

Building lifetime relationships with our clients and employees.

Landfill Methane Rule Surface Emissions Monitoring Plan

Western Regional Sanitary Landfill

May 2016

Prepared for:
Western Placer Waste Management Authority
3195 Athens Avenue
Lincoln, CA 95468

7600 Dublin Blvd., Suite 200
Dublin, CA 94568
(877) 633-5520

Revision History

Landfill Methane Rule (LMR) Surface Emissions Monitoring (SEM) Plan

Western Regional Sanitary Landfill
Lincoln, California

Add the effective date of the most recent revision to the list below. Do not overwrite or delete any dates. This is intended to be a complete record of all revisions made to this Plan, and assists in making certain that all plan revisions are retained at least five (5) years as required by California Code of Regulations (CCR) Title 17 §95470(a)(1)(D).

Date of Initial Issuance
November 2, 2011
REVISION DATES
May 20, 2016

TABLE OF CONTENTS

REVISION HISTORY II

1 INTRODUCTION 4

1.1 PURPOSE OF PLAN 4

2 LMR SURFACE EMISSIONS MONITORING PLAN 5

2.1 SEM REQUIREMENTS 5

2.1.1 ALTERNATIVE REQUESTS 5

2.1.2 MONITORING AREA AND GRIDS 5

2.1.3 WEATHER CONDITIONS 6

2.1.4 FREQUENCY 7

2.1.5 RECORDKEEPING 8

2.2 INSTANTANEOUS SEM REQUIREMENTS 8

2.2.1 INSTANTANEOUS SEM PROCEDURES 8

2.2.2 INSTANTANEOUS SEM MONITORING EQUIPMENT 10

2.2.3 200 PPMV METHANE INSTANTANEOUS SEM EXCEEDANCES 11

2.2.4 500 PPMV METHANE INSTANTANEOUS SEM EXCEEDANCES 11

2.3 INTEGRATED SEM REQUIREMENTS 13

2.3.1 INTEGRATED SEM PROCEDURES 13

2.3.2 INTEGRATED SEM MONITORING EQUIPMENT 14

2.3.3 INTEGRATED SEM RESULTS BELOW 25 PPMV 14

2.3.4 25 PPMV INTEGRATED SEM EXCEEDANCES 15

LIMITATIONS 17

APPENDICES

APPENDIX A PCAPCD CORRESPONDENCE

APPENDIX B APPROVED ALTERNATIVE COMPLIANCE OPTIONS SUMMARY

APPENDIX C INSTANTANEOUS AND INTEGRATED SEM EVENT MAP

APPENDIX D LMR SURFACE EMISSIONS MONITORING REPORT TEMPLATE

1 INTRODUCTION

1.1 Purpose of Plan

The Western Regional Sanitary Landfill (WRSL) is an active landfill located in Lincoln, Placer County, California, owned and operated by the Western Placer Waste Management Authority (WPWMA). This Surface Emissions Monitoring (SEM) Plan (Plan) has been prepared by Cornerstone on behalf of WPWMA to provide a monitoring protocol in compliance with the requirements of the California Code of Regulations (CCR) Title 17, Division 3, Chapter 1, Subchapter 10, Article 4, Subarticle 6, Methane Emissions from Municipal Solid Waste Landfills (CCR Title 17) Landfill Methane Rule (LMR), as mandated by Assembly Bill (AB) 32.

WRSL is subject to the SEM requirements of CCR Title 17 per §95463(b) because the waste-in-place (WIP) is greater than 450,000 tons and heat input capacity (HIC) of WRSL exceeds 3.0 million British thermal units per hour (MMBTU/hr). A landfill gas collection and control system (GCCS) has been installed at WRSL and is in continuous operation. Surface emissions will be monitored quarterly, as required by regulations and as described in this SEM Plan, unless otherwise approved.

2 LMR SURFACE EMISSIONS MONITORING PLAN

2.1 SEM Requirements

The purpose of SEM is to ensure that no location on the municipal solid waste (MSW) landfill surface exceeds 500 parts per million by volume (ppmv) (other than non-repeatable, momentary readings) during instantaneous SEM, nor any identified approximately 50,000 square foot (ft^2) grid exceed an average methane concentration of 25 ppmv methane during integrated SEM. Pursuant to CCR Title 17 §95469(a), instantaneous and integrated surface monitoring must be conducted on a quarterly basis unless otherwise approved. Due to a delay in implementation, per the California Air Resources Board (CARB), December 1, 2010 MSW Landfill Regulation Regulatory Advisory, the SEM became effective and starting July 1, 2011. The following test methods and procedures for surface emissions testing satisfy 40 Code of Federal Regulations (CFR) §60.753 (d) and the requirements of CCR Title 17 §95471.

2.1.1 Alternative Requests

Pursuant to CCR Title 17 §95468, WPWMA may request alternatives to the compliance measures, monitoring requirements, test methods and procedures of CCR Title 17 §95464, §95469, and §95471. The landfill owner or operator must file a written request with an explanation of the alternative compliance option (ACO) with the Executive Officer (EO), in this case the Placer County Air Pollution Control District (PCAPCD). The EO shall notify the landfill owner or operator in writing of the decision. An ACO Request was submitted to the PCAPCD on February 29, 2012, per CCR Title 17 §95468(a). A formal response to the ACO request was received by the Western Placer Waste Management Authority (WPWMA) on August 7, 2012.

Within this Plan, a brief description of approved ACO requests are included at the end of each section identifying any applicable alternative methods. ACO requests are included in Appendix A, PCAPCD Correspondence. Detailed ACO requirements are included within Appendix B, Approved Alternative Compliance Options Summary.

2.1.2 Monitoring Area and Grids

Pursuant to CCR Title 17 §95471(c)(1), the entire landfill surface must be divided into individually identified approximately 50,000 ft^2 grids, which shall be used for both instantaneous and integrated SEM. Appendix C contains an SEM Grid Map for WRSL which was developed in accordance with the requirements of CCR Title 17 §95471(c)(1):

- The walking pattern must be no more than a 25-foot spacing interval and must traverse each grid;

  - Per CCR Title 17 §95471(c)(1)(B)(1) and (2), if no SEM exceedances (refer to Sections 2.2 and 2.3 for instantaneous and integrated SEM exceedance limits) were detected in the past *three years prior to the effective date (July 1, 2011)* or are detected *after four consecutive quarterly monitoring events*, the walking pattern spacing may be increased to 100-foot intervals. If SEM exceedances are detected and cannot be remediated within ten calendar days or are detected during a compliance inspection, the landfill must return to a 25-foot spacing interval;
- The sampling path resembles a "serpentine" pattern which traverses the grid; and
- The walking pace should be approximately 100 feet per minute, except when limited by terrain or vegetation.

As of the date of this Plan, WRSL is divided into a total of 206 individual monitoring grids. The SEM Grid Map is located in Appendix C.

The following ACO requests are approved for monitoring areas and grids:

ACO Summary Description	Date Approved
Areas containing only asbestos-containing waste, inert waste, or non-decomposable waste.	August 7, 2012
Areas with a 25% slope or greater can be excluded.	August 7, 2012
Since landfills are not sized in 50,000 square foot increments, grid segments are allowed to be slightly larger or smaller than 50,000 square feet along waste area boundaries and around areas that cannot be subjected to SEM due to safety reasons.	August 7, 2012

The ACO requests are included in Appendix A, PCAPCD Correspondence. Detailed ACO requirements are included within Appendix B, Approved Alternative Compliance Options Summary.

2.1.3 Weather Conditions

Monitoring will be performed during typical meteorological conditions. The onsite weather station will be used for monitoring and recording wind speed data during the SEM events and reviewing periods of rainfall. The onsite weather station continuously measures and records wind speed and weather data. The onsite weather station is located at the scale house and can be seen on the Placer County website at:

http://www.placer.ca.gov/Departments/Facility/facweather.aspx

The field technician will check the wind speed using a hand-held anemometer. The wind speed will be measured and recorded to ensure the 15 minute averaged speed does not

exceed 10 mph or the instantaneous wind speed does not exceed 20 mph, per the approved ACO (see below).

The field technician will also confirm the surface of WRSL is dry enough to traverse safely and there has been no measured precipitation within the past 24 hours, per the approved ACO (see below). Historical weather data at the onsite weather station will be checked prior to conducting SEM to ensure there has been no measurable precipitation in the preceding 24 hours.

The following ACO requests are approved for weather conditions:

ACO Summary Description	Date Approved
The District will accept alternative wind speeds of the following: If the average wind speed exceeds 10 miles per hour (mph), or the instantaneous wind speed exceeds 20 mph, surface testing can be terminated until the wind speed decreases and is within the acceptable limits.	August 7, 2012
The District will allow surface monitoring when there has been no measureable precipitation in the preceding 24 hours. WPWMA will minimize the times when SEM is conducted with precipitation in the preceding 24 to 72 hours.	August 7, 2012

The ACO requests are included in Appendix A, PCAPCD Correspondence. Detailed ACO requirements are included within Appendix B, Approved Alternative Compliance Options Summary.

2.1.4 Frequency

SEM will be performed quarterly (calendar basis) for the portion of the landfill with an active GCCS.

If portions of WRSL are closed or inactive, and if there is no measured instantaneous methane reading greater than 500 ppmv after four (4) consecutive quarterly monitoring periods, WRSL may thereafter perform SEM on an annual basis. Any exceedance of the 500 ppmv limit that cannot be remediated within 10 calendar days will result in a return to quarterly SEM of WRSL.

For a closed or inactive municipal solid waste (MSW) landfill, if there is no measured concentration of 200 ppmv methane or greater from the surface of the landfill, pursuant to CCR Title 17 §95463 (b)(2)(B)(3), WRSL may discontinue surface monitoring. WRSL must, however, submit a WIP report per CCR Title 17 §95470(b)(4) and all instantaneous surface monitoring records for review and approval by the EO within 90 days.

The following ACO requests are approved for SEM frequency:

ACO Summary Description	Date Approved
The District will allow closed areas designated as Modules 1, 2, 10 and 11 to be tested annually. If an exceedance of the limits is measured, then the testing of the affected area shall return to quarterly testing.	August 7, 2012

The ACO requests are included in Appendix A, PCAPCD Correspondence. Detailed ACO requirements are included within Appendix B, Approved Alternative Compliance Options Summary.

2.1.5 Recordkeeping

Per CCR Title 17 §95470, instantaneous and integrated SEM records must be stored onsite and be readily accessible in either a paper or electronic format. These records shall be kept for at least five (5) years. These records shall include calibration forms, weather data, the location and reading of the exceedance, as well as the results of the follow-up readings in the subsequent months (whether or not these readings were exceedances), the action taken to repair the area, and the date of the repair.

Alternative recordkeeping requirements may be allowed, following approval of an ACO request, as described in Section 2.1.1. The following ACO requests are approved for recordkeeping:

ACO Summary Description	Date Approved

The ACO requests are included in Appendix A, PCAPCD Correspondence. Detailed ACO requirements are included within Appendix B, Approved Alternative Compliance Options Summary.

2.2 Instantaneous SEM Requirements

2.2.1 Instantaneous SEM Procedures

Prior to initiating the instantaneous SEM monitoring event, the field technician will:

- Confirm the surface of WRSL is dry enough to traverse safely and there has been no measured precipitation within the past 24 hours, per the approved ACO (see Section 2.1.3);
- Check the wind speed using a hand-held anemometer. The wind speed will be measured and recorded to ensure the 15 minute averaged speed does not exceed 10 mph or the instantaneous wind speed does not exceed 20 mph, per the approved ACO (See Section 2.1.3);
- Assess the monitoring grids, locate grid boundaries, and on the SEM map identify all inaccessible areas;
- Calibrate the monitoring equipment (see Section 2.2.2); and
- Establish background methane concentrations by waving the wand of the flame ionization detector (FID) upwind and downwind outside the boundary of the landfill from a distance of at least 30 meters from perimeter wells.

During the instantaneous SEM monitoring event, the field technician will employ the following procedures:

- For each monitoring grid, the field technician will follow the traverse walking path and hold the monitoring probe no more than three (3) inches above the landfill surface;
- Continuously record the wind speed using the onsite anemometer and check the instantaneous wind speed periodically with a hand-held anemometer to ensure instantaneous wind speed does not exceed 20 mph, per the approved ACO;
- Document on the Exceedance and Monitoring Log and on the grid map 200 ppmv and 500 ppmv exceedance locations, along with any re-test dates and results (See Sections 2.2.3 and 2.2.4);
- While walking, the probe should be slowly moved from side to side to cover a path of four (4) to six (6) feet wide (approximately two [2] to three [3] feet on each side);
- Any areas where visual observations indicate elevated concentrations of landfill gas (LFG), such as distressed vegetation and cracks or seeps in the cover, will be visually inspected and monitored;
- A constant walking pace of approximately 100 feet per minute should be maintained except when limited by terrain or vegetation; and
- If the pace is interrupted for more than 10 to 15 seconds, the data logging should be paused and the cause should be noted on recordkeeping forms.

The following ACO requests are approved for procedures required prior to instantaneous SEM:

ACO Summary Description	Date Approved
The wand tip of the FID may be held within 3 inches of the top of vegetation in areas where the landfill surface is covered with low-lying vegetation such as grasses, while traversing the grid.	August 7, 2012

The ACO requests are included in Appendix A, PCAPCD Correspondence. Detailed ACO requirements are included within Appendix B, Approved Alternative Compliance Options Summary.

2.2.2 Instantaneous SEM Monitoring Equipment

An organic vapor analyzer, FID, or other portable hydrocarbon detector in general conformance with 40 CFR Part 60, Appendix A, Method 21 will be used to determine the methane concentration at each sampling point, pursuant to CCR Title 17 §95471(a). The instrument will be calibrated according to the manufacturer's recommendations prior to each monitoring period and calibration results recorded on the calibration forms located in Attachment A of the Surface Emissions Monitoring Report Template. The SEM Report Template is included in Appendix D.

A hand-held anemometer will be used for monitoring instantaneous wind speed. The onsite weather station will be used to record wind speed and weather data.

Alternative instantaneous SEM monitoring equipment may be allowed following approval of an ACO request, as described in Section 2.1.1. The following ACO requests are approved for instantaneous SEM monitoring equipment:

ACO Summary Description	Date Approved

The ACO requests are included in Appendix A, PCAPCD Correspondence. Detailed ACO requirements are included within Appendix B, Approved Alternative Compliance Options Summary.

2.2.3 200 PPMV Methane Instantaneous SEM Exceedances

In accordance with CCR Title 17 §95471(c)(2), the field technician must record instantaneous surface emissions readings ranging from 200 ppmv to 500 ppmv methane using the Instantaneous SEM 200 ppmv Exceedance and Monitoring Log, located in Attachment B of the LMR Surface Emissions Monitoring Report. The LMR Surface Emissions Monitoring Report Template is included in Appendix D of this Plan.

The field technician will record the date, time, grid and instantaneous reading location, methane concentration, and any additional comments. If multiple readings are observed in a given area, the technician will delineate the area with exceedances on the map and document the readings observed. Per CCR Title 17 §95471(c), instantaneous surface emissions from 200 ppmv up to and including 500 ppmv methane readings are only required to be recorded. No remedial action is required.

Alternatives may be approved for instantaneous SEM readings of 200 to 500 ppmv following approval of an ACO request, as described in Section 2.1.1. The following ACO requests are approved for instantaneous SEM readings of 200 to 500 ppmv:

ACO Summary Description	Date Approved

The ACO requests are included in Appendix A, PCAPCD Correspondence. Detailed ACO requirements are included within Appendix B, Approved Alternative Compliance Options Summary.

2.2.4 500 PPMV Methane Instantaneous SEM Exceedances

In accordance with CCR Title 17 §95471(c)(2), the field technician must record and remediate instantaneous surface emissions exceeding 500 ppmv methane. The Instantaneous SEM 500 ppmv Exceedance and Monitoring Log, located in Attachment B of the LMR Surface Emissions Monitoring Report Template must be completed for the monitoring event. The LMR Surface Emissions Monitoring Report Template is included in Appendix D of this Plan.

The field technician will record the date, time, grid and exceedance location, mark location on the SEM grid map, exceedance methane concentration, remedial action, and any additional comments.

If an exceedance of 500 ppmv methane is detected during instantaneous surface monitoring, the following procedures for monitoring and remediation will be employed:

Initial monitoring event: Any SEM reading greater than 500 ppmv methane above background will be recorded as an exceedance. The location of the exceedance will be marked and recorded. Cover maintenance or adjustments to the GCCS will be made following the initial monitoring event.

- *First 10-day re-monitoring event*: The locations where initial exceedances were detected will be re-monitored within 10 calendar days of the initial monitoring date. If the location continues to be in exceedance, it must be re-monitored within 10 calendar days. If no exceedance is detected, no further monitoring is required.
- *Second 10-day re-monitoring event:* If a location continues to be in exceedance during the first 10-day re-monitoring, the location must be re-monitored again within 10 calendar days. If no exceedance is detected, no further monitoring is required. Additional corrective action will be taken following the second 10-day re-monitoring.
    - If the second 10-day re-monitoring shows an exceedance (which is considered three times within a quarterly period), a new well or other collection device shall be installed within 120 calendar days of the initial exceedance. An alternative remedy to the exceedance, such as upgrading the blower, header piping or control device, and a corresponding timeline for installation may be submitted to the EO for approval.

The following ACO requests are approved for instantaneous SEM readings greater than 500 ppmv:

ACO Summary Description	Date Approved
The District will allow additional time for re-monitoring in cases where the area is dangerous or cannot be safely reached.	August 7, 2012
The District will allow other modifications than just additional wells, as appropriate, to correct exceedances. A corresponding alternative compliance timeline beyond 120 days will be allowed, as appropriate.	August 7, 2012

The ACO requests are included in Appendix A, PCAPCD Correspondence. Detailed ACO requirements are included within Appendix B, Approved Alternative Compliance Options Summary.

2.3 Integrated SEM Requirements

2.3.1 Integrated SEM Procedures

Prior to initiating the integrated SEM monitoring event, the field technician will:

- Confirm the surface of the landfill is dry enough to traverse safely and there has been no measured precipitation within the past 24 hours, per the approved ACO (see Section 2.1.3);
- Check the wind speed using a hand-held anemometer. The wind speed will be measured and recorded to ensure the 15-minute averaged speed does not exceed 10 mph or the instantaneous wind speed does not exceed 20 mph, per the approved ACO (See Section 2.1.3);
- Assess the monitoring grids, locate grid boundaries, and on the SEM map identify all inaccessible areas;
- Assemble the sampling unit and calibrate the monitoring equipment (see Section 2.3.2); and
- Establish background methane concentrations by waving the wand of the FID upwind and downwind outside the boundary of the landfill from a distance of at least 30 meters from perimeter wells.

During the integrated SEM monitoring event, the field technician will employ the following procedures:

- For each monitoring grid, the field technician will follow the traverse walking path and hold the monitoring probe no more than three inches above the landfill surface;
- Continuously record the wind speed using the onsite anemometer and check the instantaneous wind speed periodically with a hand-held anemometer to ensure instantaneous wind speed does not exceed 20 mph, per the approved ACO;
- While walking, the probe should be slowly moved from side to side to cover a path of four to six feed wide (approximately two to three feet on each side);
- Any areas where visual observations indicate elevated concentrations of LFG, such as distressed vegetation and cracks or seeps in the cover, will be visually inspected and monitored;
- If the pace is interrupted for more than 10 to 15 seconds, the data logging should be paused and the cause should be noted on recordkeeping forms; and
- Record the average methane concentration for each grid as well as any re-test dates and results (See Sections 2.3.3 and 2.3.4).

Alternative procedures required prior to integrated SEM may be allowed following approval of an ACO request, as described in Section 2.1.1. The following ACO requests are approved for procedures required prior to integrated SEM:

ACO Summary Description	Date Approved

The ACO requests are included in Appendix A, PCAPCD Correspondence. Detailed ACO requirements are included within Appendix B, Approved Alternative Compliance Options Summary.

2.3.2 Integrated SEM Monitoring Equipment

Similar equipment used in instantaneous monitoring will be used for the integrated monitoring. The meter used will be capable of averaging the methane readings collected across each grid to obtain the integrated reading.

2.3.3 Integrated SEM Results Below 25 PPMV

Per CCR Title 17 §95471(c)(3)(A), the field technician must record the average methane concentration for each grid. The Integrated Surface Monitoring Grid Log, located in Attachment B of the LMR Surface Emissions Monitoring Report Template must be completed for the monitoring event. The LMR Surface Emissions Monitoring Report Template is included in Appendix D of this Plan. The Log must include the average methane concentration for each grid. Grids with methane concentrations greater than 25 ppmv methane must be recorded on a separate exceedance log, as discussed in Section 2.3.4.

Alternatives for integrated SEM exceedances below 25 ppmv methane may be allowed following approval of an ACO request. See Section 2.1.1 for additional information. The following ACO requests are approved for integrated SEM procedures:

ACO Summary Description	Date Approved

The ACO requests are included in Appendix A, PCAPCD Correspondence. Detailed ACO requirements are included within Appendix B, Approved Alternative Compliance Options Summary.

2.3.4 25 PPMV Integrated SEM Exceedances

In accordance with CCR Title 17 §95471(c)(3), the field technician must record and remediate grids containing integrated surface emissions exceeding 25 ppmv on average. The Integrated SEM 25 ppmv Exceedance and Monitoring Log, located in Attachment B of the LMR Surface Emissions Monitoring Report Template must be completed for the monitoring event. The LMR Surface Emissions Monitoring Report Template is included in Appendix D of this Plan.

The field technician will record the date, time, grid number, mark location on the SEM grid map, average methane concentration for each grid, remedial action, and any additional comments.

If an exceedance of 25 ppmv methane is detected during integrated surface monitoring, the following procedures for monitoring and remediation will be employed:

- *Initial monitoring event:* Any detection of 25 ppmv or more will be recorded as an exceedance. Cover maintenance or adjustments to the GCCS will be made following the initial monitoring event.
- *First 10-day re-monitoring event*: The grid where initial exceedances were detected will be re-monitored within 10 calendar days of the initial monitoring date. If the grid continues to be in exceedance, it must be re-monitored within 10 calendar days. If no exceedance is detected, no further monitoring is required.
- *Second 10-day re-monitoring event:* If a grid continues to be in exceedance during the first 10-day re-monitoring, the grid must be re-monitored again within 10 calendar days. If no exceedance is detected, no further monitoring is required. Additional corrective action will be taken following the second 10-day re-monitoring.
    - If the second 10-day re-monitoring shows an exceedance (which is considered three (3) times within a quarterly period), a new well or other collection device shall be installed within 120 calendar days of the initial exceedance. An alternative remedy to the exceedance, such as upgrading the blower, header pipes or control device, and a corresponding timeline for installation may be submitted to the EO for approval.

The following ACO requests are approved for integrated SEM procedures:

ACO Summary Description	Date Approved
The District will allow additional time for re-monitoring in cases where the area is dangerous or cannot be safely reached.	August 7, 2012
The District will allow other modifications than just additional wells, as appropriate, to correct exceedances. A corresponding alternative compliance timeline beyond 120 days will be allowed, as appropriate.	August 7, 2012

The ACO requests are included in Appendix A, PCAPCD Correspondence. Detailed ACO requirements are included within Appendix B, Approved Alternative Compliance Options Summary.

LIMITATIONS

The work product included in the attached was undertaken in full conformity with generally accepted professional consulting principles and practices and to the fullest extent as allowed by law we expressly disclaim all warranties, express or implied, including warranties of merchantability or fitness for a particular purpose. The work product was completed in full conformity with the contract with our client and this document is solely for the use and reliance of our client (unless previously agreed upon that a third party could rely on the work product) and any reliance on this work product by an unapproved outside party is at such party's risk.

The work product herein (including opinions, conclusions, suggestions, etc.) was prepared based on the situations and circumstances as found at the time, location, scope and goal of our performance and thus should be relied upon and used by our client recognizing these considerations and limitations. Cornerstone shall not be liable for the consequences of any change in environmental standards, practices, or regulations following the completion of our work and there is no warrant to the veracity of information provided by third parties, or the partial utilization of this work product. Cornerstone is not responsible for the impacts of any changes in information, site operations or methods that may change in the future.

APPENDIX A
PCAPCD CORRESPONDENCE

Placer County
AIR POLLUTION CONTROL DISTRICT

110 Maple St., Auburn, CA 95603 • (530) 745-2330 • Fax (530) 745-2373 • www.placer.ca.gov/apcd

Thomas J. Christofk, Air Pollution Control Officer

August 7, 2012

Mr. Keith J. Schmidt, P.E.
Western Placer Waste Management Authority
11476 C Avenue
Auburn, CA 95603

Subject: District Response to Proposed Exceptions to SEM Plan

Dear Mr. Schmidt:

The following responds to the proposed alternative compliance options for the Western Regional Sanitary Landfill.

1) Areas Excluded from Collection and Surface Emission Monitoring (SEM)
CCR 95464(a)(1)(F)(1) allows the exclusion of areas containing only asbestos-containing waste, inert waste, or non-decomposable waste.

Placer County Air Pollution Control District (District) accepts and allows the clarifications made in the proposal.

2) Areas Excluded from SEM Where Safety Issues Exist
CCR 95471(c)(1) requires that SEM activities be conducted over the entire landfill surface.

The District accepts and allows the exclusion of areas as described in the proposal. Specifically, the use of 25% slope is allowed.

3) Methane Destruction Compliance Parameter – Flares
CCR 95464(b)(2)(A)(4) requires that an enclosed flare operated as a control device be operated within the parameter ranges established during the initial or most recent source test.

The District believes that it is reasonable that there be a tolerance on the flare operating temperature. If the last source test were used as the minimum operating temperature, then the allowable flare temperature would continually ratchet up with subsequent flare tests. The District accepts the requested 50 degree F below source test request.

However, flare temperature is not the only compliance parameter. The methane destruction efficiency of at least 99 percent by weight of 95464(B)(2)(A)(1) must be demonstrated by annual or triennial source test. The District plans to amend your flare permits to include the annual methane destruction test.

4) Source Test Methods

As specified in CCR 95464(b)(4), annual compliance testing of the control devices specifies the use of the test methods identified in CCR 95471(f), as follows: USEPA Methods 18, 25, 25A, or 25C.

The District intends to add to the flare permits the 99 percent methane destruction requirement and use the test methods required in the permits. So the SEM should state that the test methods are called out in the permits.

The Landfill Regulation requires flare testing annually until the destruction limit is achieved three years consecutively, and then the testing frequency can be extended to three years. The testing frequency in the District permits is biennially. Once the three consecutive years of meeting the methane destruction requirement is achieved, we intend to require the methane testing biennially with the other flare testing.

5) Timeline for Leak Repairs

CCR 95468(a)(2) allows additional time for leak repairs at landfills with procurement and delivery delays for necessary parts to complete the repair, or adverse weather conditions that impede work.

WPWMA seems to be requesting a blanket ACO for times when requirements cannot be implemented within the timeline due to procurement or weather issues. This request is denied. The District prefers to initially have these requests be made specific to the individual incident. If there are numerous repetitive incidents, the District may consider a blanket ACO for this particular situation.

6) SEM Procedures

CCR95469(a) requires that owners or operators of landfills with a GCCS conduct instantaneous and integrated SEM quarterly using the procedures specified in CCR 95471(c).
Article 95471(c) does not specify whether the instantaneous and integrated SEMs are to be done individually or simultaneously. Either way is acceptable to the District as long as the SEM meets the requirements of the article.

7) Re-monitoring After Instantaneous and Integrated Exceedances

CCR95469(a)(1)(B) and (a)(2)(B) require corrective action be taken by the owner or operator such as, but not limited to, cover maintenance or repair, or well vacuum adjustments and location re-monitored within ten calendar days of a measured excedance of the instantaneous and/or integrated surface emission standards.

The District will allow additional time for re-monitoring in cases where the area is dangerous or cannot be safely reached, as requested.

8) SEM Remediation after Third Instantaneous and/or Third Integrated SEM Excedance

CCR 95469(a)(1)(B)(2) and (a)(2)(B)(2) require the installation of a new or replacement well within 120 calendar days of detecting a third excedance of the Instantaneous SEM limit of CCR 95465(a)(1) and/or the Integrated SEM limit of CCR 95465(a)(2).

The District will allow other modifications than just additional wells, as appropriate, to correct excedances. A corresponding alternative compliance timeline beyond 120 days will be allowed, as appropriate.

9) SEM Monitoring Height

CCR 95471(c)(1)(A) requires that SEM be conducted by holding the probe within three (3) inches of the landfill surface while traversing the grid.

If an area not clear of surface vegetation cannot be found in the walking path, the District will allow the top of the vegetation to be considered the landfill surface and the probe be held within three inches vertical of the vegetation surface.

10) Wellhead Pressure Requirements

CCR 95469(c) requires corrective action if monthly wellhead pressure monitoring results in a positive pressure reading except as exempted in CCR 95464(d) (well raising) and CCR 95464(e) (temporary shutdown in order to repair the components, due to catastrophic events such as earthquakes, to connect new LFG collection system components to the existing system, to extinguish landfill fires, or to perform construction activities.)

The WPWMA is requesting to allow temporary exemption from well head pressure requirements due to potential subsurface oxidation, well damage, poor LFG quality, or other reasons as documented by the WPWMA not listed in 95469. The District will allow these additional exemptions provided the event is described to the District in writing and the District concurs.

11) Wellhead Pressure Exceedance Corrective Action

CCR 95469(c)(2) requires further corrective actions be initiated, including, but not limited to, any necessary expansion of the GCCS, to correct any positive pressure readings if positive pressure readings cannot be corrected within 15 days after the initial positive pressure reading. CCR 95469(c)(3) requires corrective action, including any necessary expansion of the GCCS, to correct any positive pressure readings within 120 days of the initial positive pressure reading.

The District will consider requests for alternative engineering solutions to be evaluated and allow an alternative timeline to consider and implement alternative solutions. This will require concurrence by the District for the engineering study and implementation.

12) Wind Speed

CCR 95471(c)(1)(C) requires that SEM be terminated when the average wind speed exceeds five miles per hour (mph) or the instantaneous wind speed exceeds 10 mph. The Executive Officer may approve alternatives to this wind speed SEM termination for MSW landfills consistently having measured winds in excess of these specified limits.

The District agrees that the landfill is located in a windy area and will accept the alternative wind speeds of 10 mph for average wind and 20 mph for instantaneous wind speed.

13) Measurable Precipitation

CCR 95471(c)(1)(D) requires that SEM be conducted only when there has been no measurable precipitation in the preceding 72 hours.

The District will allow SEM to be conducted only when there has been no measurable precipitation in the preceding 24 hours, as requested. WPWMA shall minimize the times when SEM is conducted with precipitation in the preceding 24-72 hours.

14) Source Testing Schedule

CCR 95464(b)(4) requires that annual source testing be conducted no later than 45 days after the anniversary of the initial source test.

WPWMA is requesting that the control device source test be conducted with the District source testing of the flares for the Title V permit on the timing for the Title V tests without regard to the 45 day requirement. The District denies this request. The CCR 95464(b)(4) testing is initially required annually, while the Title V testing frequency is biennially. In years when both types of testing are required, the testing can be combined and scheduled to meet the 45 day requirement.

15) Grid Area – Near Landfill Waste Boundaries

CCR 95471(c)(1) requires that the entire surface of the landfill be divided up into individually identified 50,000 square foot grids which would be used for both instantaneous and integrated SEM.

Since landfills are not sized in 50,000 square foot increments, the District will allow, along waste area boundaries and around areas that cannot be subjected to SEM due to safety reasons, grid segments that are slightly larger or smaller than 50,000 square feet.

16) Grid Sizes – Areas Excluded from SEM

See ACP (15) above.

17) Closed Areas – Reduction to Annual SEM

In accordance with CCR 95469(a)(3), an owner or operator of a closed or inactive MSW landfill, or any closed or inactive area on an active MSW landfill that can demonstrate that in the three years before the effective date of this subarticle that there were no measured excedances of the limits specified in 95465 by annual or quarterly monitoring may monitor annually.

The District will allow closed areas designated as Modules 1, 2, 10, and 11 to be tested annually. If an excedance of the limits is measured, then the testing of the affected area shall return to quarterly testing.

18) Exemption from Compliance with Sections 95464 through 95470

In accordance with 95463(b)(2)(B)(3), if there is no measured concentration of methane of 200 ppmv or greater from the surface of a closed or inactive MSW landfill, the requirements of sections 95464 through 95470 no longer apply provided that the following information is submitted to and approved by the EO within 90 days:

a. Waste-in-Place report
b. All instantaneous monitoring records.

WPWMA is requesting that Modules 1, 2, 10, and 11 be exempted from compliance with these noted sections. This request is denied at this time. The request will be granted once the measured concentration of methane does not exceed 200 ppmv for four consecutive quarters.

19) Increase in Walking Pattern Spacing

Per CCR 9547(c)(1)(B)(1) and (2), if no SEM excedances were detected in the past three years prior to the effective date (July 1, 2011) or are detected after four consecutive quarterly monitoring events, the walking pattern spacing may be increased to 100-foot intervals. If SEM excedances are detected and cannot be remediated within ten calendar days or are detected during a compliance inspection, the WPWMA must return to a 25-foot spacing interval.

No ACO is required for increasing the walking pattern spacing for grids that have had no excedances as described above. WPWMA should keep records to justify the larger walking pattern.

PROPOSED CLARIFICATIONS

1) Continuous Routing of LFG/Operation of GCCS

CCR 95464(b)(1)(A) requires that the owner or operator of a GCCCS "Route the collected gas to a gas control device or devices, and operate the gas collection and control system continuously except as provided in CCR 95464(d) and (e)".

The District will accept WPWMA's interpretation, consistent with the NSPS, that GCCS downtime of less than five days and/or control device downtime of less than one hour not be considered reportable deviations, and therefore only subject to the SSM reporting requirements.

2) Wellhead Negative Pressure Requirements

CCR 95464(c) requires that wellheads be operated under negative pressure except as noted in CCR 95464(c)(d) or (e). WPWMA's interpretation is that this applies to wells within the limit of the waste and not to perimeter wells or soil vapor extraction wells which are not in refuse and are not extracting LFG, consistent with the NSPS. The District will concur with this interpretation.

If you have any questions regarding this matter, please contact me at (530) 745-2336.

Sincerely,

Don Duffy

Don Duffy
Air Pollution Control Engineer

APPENDIX B

APPROVED ALTERNATIVE COMPLIANCE OPTIONS SUMMARY

WESTERN REGIONAL SANITARY LANDFILL
APPROVED ALTERNATIVE COMPLIANCE OPTIONS SUMMARY

Title 17 Section	Requirement	Alternative	Approval Date
95464(a)(1)(F)(1)	Any areas of the landfill that contain only asbestos-containing waste, inert waste or non-decomposable solid waste may be excluded from collection.	Any areas of the landfill that contain only asbestos-containing waste, inert waste or non-decomposable solid waste may be excluded from collection and surface emission monitoring.	August 7, 2012
95471(c)(1)	The entire landfill surface mist be divided into individually identified 50,000 square foot grids. The grids must be used for both instantaneous and integrated surface emissions monitoring.	The District accepts and allowed the exclusion of areas of greater than 25% slope.	August 7, 2012
95469(a)(1)(B) and (a)(2)(B)	For integrated and instantaneous monitoring corrective action is to be taken within ten calendar days of the measured exceedance of the SEM standards.	The District will allow additional time for re-monitoring in cases where the area is dangerous or cannot be safely reached.	August 7, 2012
95469(a)(1)(B)(2) and (a)(2)(B)(2)	For integrated and instantaneous monitoring a new or replacement will be installed within 120 days of detection of a third exceedance of the SEM limit.	The District will allow other modifications than just additional wells, as appropriate, to correct exceedances. A corresponding alternative compliance timeline beyond 120 days will be allowed, as appropriate.	August 7, 2012
95471(c)(1)(C)	Surface testing must be terminated when the average wind speed exceeds file miles per hour or the instantaneous wind speed exceeds 10 miles per hour.	The District will accept the alternative wind speeds of 10- miles per hour for average wind and 20 miles per hour for instantaneous wind speed.	August 7, 2012

Title 17 Section	Requirement	Alternative	Approval Date
95471(c)(1)(D)	Surface emissions testing must be conducted only when there has been no measurable precipitation in the preceding 72 hours.	The District will allow SEM to be conducted only when there has been no measurable precipitation in the preceding 24 hours. WPWMA shall minimize the times when SEM is conducted with precipitation in the preceding 24 to 72 hours.	August 7, 2012
95471(c)(1)	The entire landfill surface mist be divided into individually identified 50,000 square foot grids. The grids must be used for both instantaneous and integrated surface emissions monitoring.	Since landfills are not sized in 50,000 square foot increments, the District will allow along waste area boundaries and around areas that cannot be subjected to SEM due to safety reasons, grid segments that are slightly large or smaller than 50,000 square feet.	August 7, 2012
95469(a)(3)	An owner or operator of a closed or inactive MSWQ landfill, or any closed or inactive areas on an active MSW landfill that can demonstrate that in the three years before the effective date of this subarticle there were no measured exceedances of the limits…by annual or quarterly monitoring may monitor annually.	The District will allow closed areas designated as Modules 1, 2, 10 and 11 to be tested annually. If an exceedance of the limits is measured, the testing of the affected area hall return to quarterly testing.	August 7, 2012

APPENDIX C

INSTANTANEOUS AND INTEGRATED SEM EVENT MAP

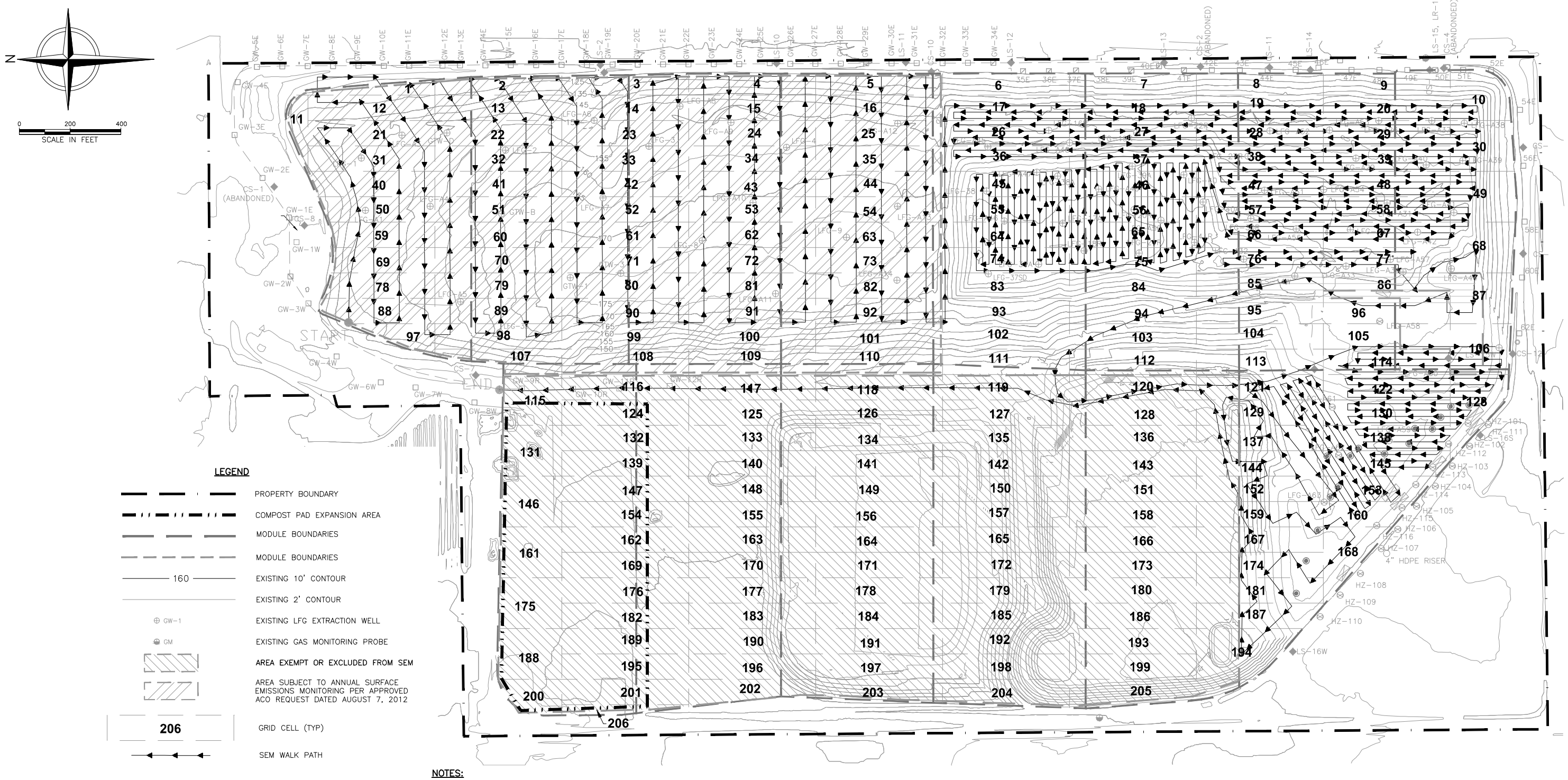

NOTES:

1. TOPOGRAPHY COMPILED BY PHOTOGRAMMETRIC METHODS BY THE BASE MAPPING COMPANY LTD. DATE OF PHOTOGRAPHY: JULY 31, 2013.
2. FEATURES, CONTOURS, AND ELEVATIONS ON THESE BASE MAPS ARE APPROXIMATE INDICATIONS OF CURRENT AND FUTURE CONDITIONS.
3. SOURCE OF 2012 AS-BUILT DATA: AMERICAN ENVIRONMENTAL GROUP LTD. SUPPLEMENTAL 2013 GCCS IMPROVEMENTS AS-BUILT PIPING AND WELL LOCATIONS PER FIELD SURVEY PERFORMED BY F3 AND ASSOCIATES, DATED NOVEMBER 20, 2013 AND NOVEMBER 25, 2013. SUPPLEMENTAL GCCS LOCATIONS, INCLUDING HORIZONTAL COLLECTORS HZ-111 THROUGH HZ-116, PER FIELD OBSERVATIONS PERFORMED IN JANUARY 2014.
4. MONITORING DATES:
5. TECHNICIANS:

REV	DATE	DESCRIPTION	DWN BY	DES BY	CHK BY	APP BY

DATE OF ISSUE 05/18/2016
DRAWN BY RAW
DESIGNED BY JR
CHECKED BY ML
APPROVED BY CWY

cornerstone environmental

PREPARED BY:
CORNERSTONE ENVIRONMENTAL GROUP, LLC

This drawing represents intellectual property of Cornerstone Environmental Group LLC. Any modification to the original by other than Cornerstone Environmental Group LLC personnel violates its original purpose and as such is rendered void. Cornerstone Environmental Group LLC will not be held liable for any changes made to this document without express written consent of the originator.

WESTERN REGIONAL SANITARY LANDFILL
PLACER COUNTY, CALIFORNIA

SURFACE EMISSION MONITORING MAP

SHEET NO. 1
PROJECT NO. 110343

File: L:\PROJECTS\PLACER COUNTY\110343 - WRSL_PROJECT DRAWINGS\SEM\2016\DBR-SEM GRID w WALK PATH.dwg Layout: SHT 1 User: russell.williams May 18, 2016 - 1:08pm
1" 1/2" 0" 1"

APPENDIX D
LMR SURFACE EMISSIONS MONITORING REPORT TEMPLATE

cornerstone
A TETRA TECH COMPANY

7600 Dublin Boulevard, Suite 200, Dublin, CA 94568
T 877.633.5520 | F 925.560.9879 | W www.cornerstoneeg.com

DATE

Mr. Keith Schmidt
Western Regional Sanitary Landfill
3033 Fiddyment Road
Roseville, CA 95648

Re: QUARTER/YEAR Landfill Methane Rule Surface Emissions Monitoring Report
Western Regional Sanitary Landfill

Dear Mr. Schmidt:

This report for the Western Regional Sanitary Landfill (WRSL) contains the results of the QUARTER/YEAR Integrated and Instantaneous Landfill Methane Rule (LMR) Surface Emissions Monitoring (SEM). This monitoring was conducted in accordance with the requirements set forth in the California Code of Regulations (CCR) Title 17, Division 3, Chapter 1, Subarticle 6 (Title 17), as mandated by Assembly Bill (AB) 32 LMR. All monitoring and reporting was completed in accordance with the LMR WRSL SEM Plan, dated May 2016, prepared by Cornerstone Environmental Group, LLC (Cornerstone).

An Alternative Compliance Option (ACO) Request was submitted to the Placer County Air Pollution Control District (PCAPCD) on February 29, 2012, per CCR Title 17 §95468(a). A formal response to the ACO request was received by the Western Placer Waste Management Authority (WPWMA) on August 7, 2012.

The following is a summary of the monitoring results completed for QUARTER/YEAR on DATE.

Instantaneous and Integrated Surface Monitoring Procedures

The surface of the WRSL disposal area has been divided into 206 monitoring grids – approximately 50,000 square feet each. The Instantaneous and Integrated SEM was conducted using a flame ionization detector (FID) which meets or exceeds all guidelines set forth in the LMR SEM CCR Title 17 §95471(a). The FID was calibrated prior to use in accordance with the United States Environmental Protection Agency (USEPA) Method 21. The Instantaneous SEM procedures followed the requirements of CCR Title 17 §95471(c)(2). The Integrated SEM was conducted using an FID with averaging capabilities to average the

methane readings measured while walking the surface of each grid. Calibration logs were completed by the field technician performing the SEM and a copy of the calibration forms are included in Appendix A of this report.

Weather Conditions during Monitoring

The wind speed was recorded and averaged in 15-minute intervals using an onsite anemometer with a continuous recorder for the entire duration of the monitoring event. Pursuant to the approved ACO request, if the average wind speed exceeded 10 miles per hour (mph), or the instantaneous wind speed exceeded 20 mph, surface testing was terminated until the wind speed decreased and was within the acceptable limits. During these monitoring events, the instantaneous and integrated wind speeds were within the required limits. Pursuant to the approved ACO request, surface monitoring was not conducted within 24 hours of measureable precipitation. Weather data collected during surface monitoring is available onsite, upon request.

Instantaneous Surface Monitoring

Field personnel walked the surface of the Landfill following the walking pattern as depicted in Attachment C, which traverses each monitoring grid. Pursuant to the approved ACO areas of the Landfill slopes greater than 14 degrees (25 percent) and areas only containing asbestos-containing waste, inert waste and/or non-decomposable waste were not monitored. As allowed by CCR Title 17 §95466, areas of the Landfill with active operations and areas of the landfill surface where the landfill cover materials have been removed and refuse has been exposed for the purpose of installing, expanding, replacing, or repairing components of the landfill gas, leachate or gas condensate collection and removal system, were excluded.

While walking, the wand tip of the FID was held within three (3) inches of the landfill surface while traversing the grid. Per an approved ACO request, the wand tip of the FID was held within 3 inches of vegetation in areas where the landfill surface is covered with low-lying vegetation such as grasses, while traversing the grid. All instantaneous surface monitoring was performed in accordance with Title 40 Code of Federal Regulation (CFR) §60.755 (c)(3) and CCR Title 17 §95471(c).

Any instantaneous surface readings of methane over 500 parts per million by volume (ppmv) methane were recorded and marked on the SEM Map, and Exceedances and Monitoring Log (Appendix B) and flagged for remediation. Any instantaneous surface readings of methane from (and including) 200 to 500 ppmv were recorded and marked on the SEM Map and the Exceedances and Monitoring Log (Appendix B). Readings between 200 to 500 ppmv are not an exceedance of CCR Title 17 §95465(a)(1-2), therefore no further action is required. The SEM Map is included in Appendix C of this report. WRSL personnel were informed of the SEM results immediately following monitoring.

Results of QUARTER/YEAR Instantaneous SEM

Readings between 200 ppmv and 500 ppmv Methane

There were INSERT readings between 200 ppmv and 500 ppmv methane detected during the initial monitoring event conducted on DATE. See Appendix B, Instantaneous SEM 200 ppmv Methane Readings and Monitoring Log, for details. Pursuant to CCR Title 17 §95471(c), instantaneous surface emissions exceeding 200 ppmv but below 500 ppmv methane are required to be recorded, however no remedial action is required.

500 ppmv or Higher Methane Exceedances

There was INSERT exceedance, in Grid #, of 500 ppmv methane detected on DATE. See Appendices B and C, Instantaneous SEM 500 ppmv Methane Exceedances and Monitoring Log, and SEM Map, for details.

[***If no exceedances detected:*** *Since there were no location with exceedances detected during the initial monitoring event, ten-day re-monitoring and thirty-day follow-up monitoring events were not required.]*

First Ten-day Re-monitoring Results

The first ten-day re-monitoring event was completed on DATE. Upon re-monitoring, Grid # was found to be in compliance of 500 ppmv methane.

[***If no exceedances detected:*** *No exceedances (methane readings above 500 ppmv) were detected during this monitoring event.]*

Second Ten-day Re-monitoring Results

On DATE, field personnel completed a 30-day follow-up monitoring of the exceedance of 500 ppmv methane in Grid # in accordance with the LMR SEM Regulations. Results indicated that no further exceedance of the 500 ppmv limit remained.

Integrated Surface Monitoring

Field personnel walked the surface of the Landfill following the walking pattern which traverses each monitoring grid, as depicted in Appendix C. Pursuant to the approved ACO areas of the Landfill slopes greater than 14 degrees (25 percent) and areas only containing asbestos-containing waste, inert waste and/or non-decomposable waste were not monitored. As allowed by CCR Title 17 §95466 areas of the Landfill with active operations and areas of the landfill surface where the landfill cover materials have been removed and refuse has been exposed for the purpose of installing, expanding, replacing, or repairing components of the landfill gas, leachate or gas condensate collection and removal system, were excluded.

The integrated surface sampling equipment consisted of an FID which meets or exceeds all guidelines set forth in the CCR Title 17 §95471(a). The FID was calibrated prior to use in accordance with the USEPA Method 21. The FID averaged the methane readings observed while walking the surface of each grid. During sampling, the probe was held within 3 inches of the landfill surface and any vegetation in areas where the landfill surface is covered with low-lying vegetation, as allowed by the approved ACO request.

The field technician traversed the grid walking path at a pace of approximately 100 feet per minute. Grids with results greater than 25 ppmv methane were recorded, marked on the SEM map, and flagged for remediation. The SEM Map is included in Appendix C of this report. WRSL personnel were informed of the SEM results immediately following monitoring.

Results of QUARTER/YEAR Integrated SEM

The average methane concentration of each grid was recorded during the monitoring event. See Appendix C, Integrated Surface Monitoring Grid Log.

There were INSERT grids (Grids #, #, and #) with exceedances of 25 ppmv or higher methane detected during the initial monitoring event conducted on DATE.

[***If no exceedances detected:*** *Since there were no location with exceedances detected during the initial monitoring event, no further monitoring is required.]*

See Appendices B and C, Integrated SEM 25 ppmv Exceedances and Monitoring Log, and SEM Map, for details.

First Ten-day Re-monitoring Results

The first ten-day re-monitoring event was completed on DATE.

If exceedances detected: Upon re-monitoring, all INSERT grids remained in exceedance of 25 ppmv methane.

Second Ten-day Re-monitoring Results

The second ten-day re-monitoring event was completed on DATE.

[***If no exceedances detected:*** *No exceedances (methane readings above 25 ppmv) were detected during this monitoring event.]*

If exceedances detected: All INSERT grids continued to be in exceedance of 25 ppmv methane.

Pursuant to CCR Title 17 §95469(a)(2)(B)(2), the owner and operator must install a new or replacement well as determined to achieve compliance no later than 120 calendar days after detecting the third exceedance. However, in accordance with the approved ACO, the District will allow other modifications than just additional wells such as upgrading the blower, header pipes or control device, as appropriate to correct exceedances, and a corresponding alternative compliance timeline beyond 120 days will be allowed, as appropriate.

All monitoring was completed in accordance with the 40 CFR §60.753 (d) and the LMR SEM CCR Title 17 requirements. If you have any questions regarding this report, please do not hesitate to contact me at PHONE NUMBER.

Sincerely,

Cornerstone Environmental Group, LLC

Enclosures: Appendix A - Calibration Records
Appendix B - Exceedances and Monitoring Log
Instantaneous SEM 200 ppmv Exceedance and Monitoring Log
Integrated SEM Monitoring Grid Log
Integrated SEM 25 ppmv Exceedances and Monitoring Log
Appendix C - SEM Event Map
Instantaneous and Integrated SEM Map

APPENDIX A
CALIBRATION RECORDS

CALIBRATION PRECISION TEST RECORD

Date: _____

Expiration Date (3 months): _____

Time: _____ AM _____ PM

Instrument Make: _____ Model: _____ S/N: _____

Measurement #1:

Meter Reading for Zero Air: _____ ppm (a)

Meter Reading for Calibration Gas: _____ ppm (b)

Measurement #2:

Meter Reading for Zero Air: _____ ppm (c)

Meter Reading for Calibration Gas: _____ ppm (d)

Measurement #3:

Meter Reading for Zero Air: _____ ppm (e)

Meter Reading for Calibration Gas: _____ ppm (f)

Calculate Precision:

$$\frac{\{|(500) - (b)| + |(500) - (d)| + |(500) - (f)|\}}{3} \times \frac{1}{500} \times 100$$

Less than 0.33% (must be < than 10%)

Performed By: _____

RESPONSE TIME TEST RECORD

Date: _____

Expiration Date (3 months): _____

Time: _____ AM _____ PM

Instrument Make: _____ Model: _____ S/N: _____

Measurement #1:

Stabilized Reading Using Calibration Gas: _____ ppm
90% of the Stabilized Reading: _____ ppm
Time to Reach 90% of Stabilized Reading after switching from Zero Air to Calibration Gas: _____ seconds (a)

Measurement #2:

Stabilized Reading Using Calibration Gas: _____ ppm
90% of the Stabilized Reading: _____ ppm
Time to Reach 90% of Stabilized Reading after switching from Zero Air to Calibration Gas: _____ seconds (b)

Measurement #3:

Stabilized Reading Using Calibration Gas: _____ ppm
90% of the Stabilized Reading: _____ ppm
Time to Reach 90% of Stabilized Reading after switching from Zero Air to Calibration Gas: _____ seconds (c)

Calculate Response Time:

$$\frac{(a) + (b) + (c)}{3} =$$ _____ seconds (must be less than 30 seconds)

Performed By: _____

CALIBRATION PROCEDURE AND BACKGROUND DETERMINATION REPORT

Landfill Name: Western Regional Sanitary Landfill Date: _____

Time: _____ AM _____ PM

Instrument Make:_____ Model: _____ S/N:_____

Calibration Procedure

1. Allow instrument to internally zero itself while introducing zero air.
2. Introduce the calibration gas into the probe.

   Stable Reading = _____ppm
3. Adjust meter to read 500 ppm.

Background Determination Procedure

1. Upwind Reading (highest in 30 seconds): _____ ppm (a)
2. Downwind Reading (highest in 30 seconds): _____ ppm (b)

Calculate Background Value:

$\frac{(a) + (b)}{2}$ Background = _____ppm

Performed By: _____

APPENDIX B

EXCEEDANCES AND MONITORING LOGS

WESTERN REGIONAL SANITARY LANDFILL INSTANTANEOUS SURFACE EMISSIONS MONITORING
INSTANTANEOUS SEM 200 PPMV EXCEEDANCES AND MONITORING LOG

Grid #/Location	Brief Description	Initial Monitoring Event		Comments
		Monitoring Date/Time	Exceedance (ppmv)	

ppmv = parts per million by volume

Pursuant to CCR Title 17 §95471(c), instantaneous surface emissions exceeding 200 ppmv but below 500 ppmv are required to be recorded. No remedial action is required.

WESTERN REGIONAL SANITARY LANDFILL INSTANTANEOUS SURFACE EMISSIONS MONITORING
INSTANTANEOUS SEM 500 PPMV EXCEEDANCES AND MONITORING LOG

Grid #/ Location	Brief Description	Initial Monitoring Event		1st 10-Day Re-Monitoring Event			2nd 10-Day Monitoring Event			Comments
		Monitoring Date/Time	Exceedance (ppmv)	Monitoring Date/Time	No Exceedance <500 ppm	Exceedance >500 ppm	Monitoring Date/Time	No Exceedance <500 ppm	Exceedance >500 ppm	

WESTERN REGIONAL SANITARY LANDFILL
INTEGRATED SURFACE EMISSIONS MONITORING LOG

Grid Number	Date	Start Time	Stop Time	Average Methane Concentration (ppmv)	Comments
1					
2					
3					
4					
5					
6					
7					
8					
9					
10					
11					
12					
13					
14					
15					
16					
17					
18					
19					
20					
21					
22					
23					
24					
25					
26					
27					
28					
29					
30					

Grid Number	Date	Start Time	Stop Time	Average Methane Concentration (ppmv)	Comments
31					
32					
33					
34					
35					
36					
37					
38					
39					
40					
41					
42					
43					
44					
45					
46					
47					
48					
49					
50					
51					
52					
53					
54					
55					
56					
57					
58					
59					
60					
61					
62					
63					

Grid Number	Date	Start Time	Stop Time	Average Methane Concentration (ppmv)	Comments
64					
65					
66					
67					
68					
69					
70					
71					
72					
73					
74					
75					
76					
77					
78					
79					
80					
81					
82					
83					
84					
85					
86					
87					
88					
89					
90					
91					
92					
93					
94					
95					
96					

Grid Number	Date	Start Time	Stop Time	Average Methane Concentration (ppmv)	Comments
97					
98					
99					
100					
101					
102					
103					
104					
105					
106					
107					
108					
109					
110					
111					
112					
113					
114					
115					
116					
117					
118					
119					
120					
121					
122					
123					
124					
125					
126					
127					
128					
129					

Grid Number	Date	Start Time	Stop Time	Average Methane Concentration (ppmv)	Comments
130					
131					
132					
133					
134					
135					
136					
137					
138					
139					
140					
141					
142					
143					
144					
145					
146					
147					
148					
149					
150					
151					
152					
153					
154					
155					
156					
157					
158					
159					
160					
161					
162					

Grid Number	Date	Start Time	Stop Time	Average Methane Concentration (ppmv)	Comments
163					
164					
165					
166					
167					
168					
169					
170					
171					
172					
173					
174					
175					
176					
177					
178					
179					
180					
181					
182					
183					
184					
185					
186					
187					
188					
189					
190					
191					
192					
193					
194					
195					

Grid Number	Date	Start Time	Stop Time	Average Methane Concentration (ppmv)	Comments
196					
197					
198					
199					
200					
201					
202					
203					
204					
205					
206					

ppmv = parts per million by volume

WESTERN REGIONAL SANITARY LANDFILL INSTANTANEOUS SURFACE EMISSIONS MONITORING
INTEGRATED SEM 25 PPMV EXCEEDANCES AND MONITORING LOG

Grid #/ Location	Brief Description	Initial Monitoring Event		1st 10-Day Re-Monitoring Event			2nd 10-Day Monitoring Event			Comments
		Monitoring Date/Time	Exceedance (ppmv)	Monitoring Date/Time	No Exceedance ≤25 ppm	Exceedance >25 ppm	Monitoring Date/Time	No Exceedance ≤25 ppm	Exceedance >25 ppm	

APPENDIX C
INSTANTANEOUS AND INTEGRATED SEM EVENT MAP

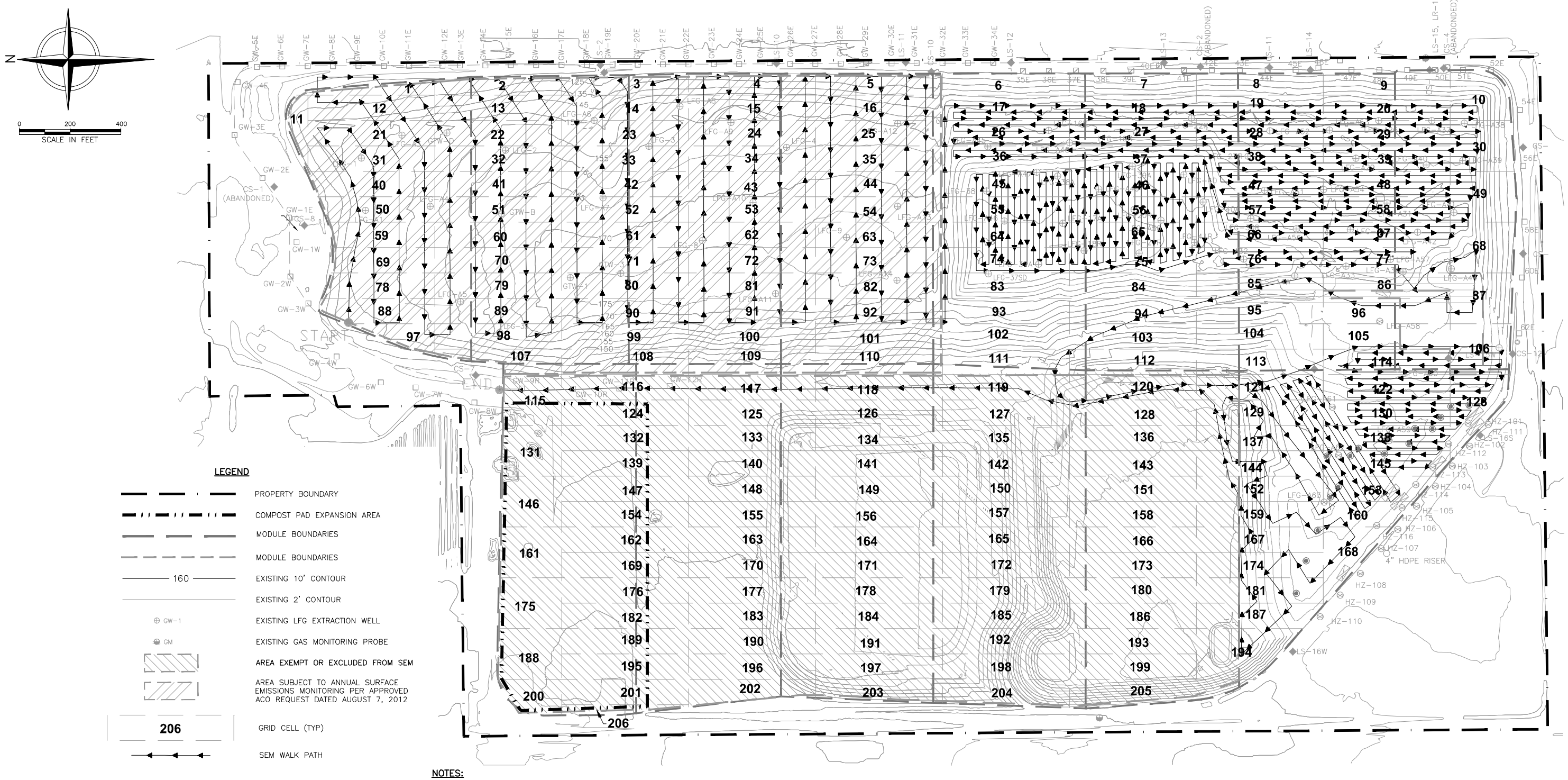

NOTES:

1. TOPOGRAPHY COMPILED BY PHOTOGRAMMETRIC METHODS BY THE BASE MAPPING COMPANY LTD. DATE OF PHOTOGRAPHY: JULY 31, 2013.
2. FEATURES, CONTOURS, AND ELEVATIONS ON THESE BASE MAPS ARE APPROXIMATE INDICATIONS OF CURRENT AND FUTURE CONDITIONS.
3. SOURCE OF 2012 AS-BUILT DATA: AMERICAN ENVIRONMENTAL GROUP LTD. SUPPLEMENTAL 2013 GCCS IMPROVEMENTS AS-BUILT PIPING AND WELL LOCATIONS PER FIELD SURVEY PERFORMED BY F3 AND ASSOCIATES, DATED NOVEMBER 20, 2013 AND NOVEMBER 25, 2013. SUPPLEMENTAL GCCS LOCATIONS, INCLUDING HORIZONTAL COLLECTORS HZ-111 THROUGH HZ-116, PER FIELD OBSERVATIONS PERFORMED IN JANUARY 2014.
4. MONITORING DATES:
5. TECHNICIANS:

REV	DATE	DESCRIPTION	DWN BY	DES BY	CHK BY	APP BY

DATE OF ISSUE 05/18/2016
DRAWN BY RAW
DESIGNED BY JR
CHECKED BY ML
APPROVED BY CWY

cornerstone environmental

PREPARED BY:
CORNERSTONE ENVIRONMENTAL GROUP, LLC

This drawing represents intellectual property of Cornerstone Environmental Group LLC. Any modification to the original by other than Cornerstone Environmental Group LLC personnel violates its original purpose and as such is rendered void. Cornerstone Environmental Group LLC will not be held liable for any changes made to this document without express written consent of the originator.

WESTERN REGIONAL SANITARY LANDFILL
PLACER COUNTY, CALIFORNIA

SURFACE EMISSION MONITORING MAP

SHEET NO. 1
PROJECT NO. 110343

File: L:\PROJECTS\PLACER COUNTY\110343 - WRSL_PROJECT DRAWINGS\SEM\2016\08IR-SEM GRID w WALK PATH.dwg Layout: SHT 1 User: russell.williams May 18, 2016 - 1:08pm
1" 1/2" 0" 1"

Appendix D
Project-Applicable Conditions on Covered Activities from the PCCP

Appendix D
Project-Applicable Conditions on Covered Activities from the PCCP

Appendix D. Project-Applicable Conditions on Covered Activities from the Placer County Conservation Program

D.1 General Condition 1: Watershed Hydrology and Water Quality

All Covered Activities will comply with the State of California General Construction Permit—including requirements to develop a project-based Storm Water Pollution Prevention Plan (SWPPP)—and applicable National Pollutant Discharge Elimination System (NPDES) program requirements as implemented by the County and the City of Lincoln.

The site design requirements, source control measures, and best management practices (BMPs) required by this Condition will cumulatively benefit Covered Species by doing the following:

a) Minimizing the potential impacts on Covered Species that are most likely to be affected by changes in hydrology and water quality

b) Reducing stream pollution by removing pollutants from surface runoff before it reaches local streams

c) Minimizing degradation of streams and maintaining or improving the hydrograph to maintain populations of Covered Species and enhance recovery

d) Reducing the potential for scour at stormwater outlets to streams by controlling the rate of flow into the streams

D.1.1 State Water Board Construction General Permit

Project applicants whose projects disturb 1 or more acres of soil or whose project disturbs less than 1 acre but the project is part of a larger common plan of development that in total disturbs 1 or more acres, are required to obtain coverage under the *General Permit for Discharges of Storm Water Associated with Construction Activity* (Construction General Permit Order 2009-0009-DWQ). Construction activity subject to this permit includes clearing, grading, and disturbances to the ground such as stockpiling or excavation, but does not include regular maintenance activities performed to restore the original line, grade, or capacity of the facility.

A component of the Construction General Permit requires the development of a SWPPP by a certified Qualified SWPPP Developer. The General Permit also aims to match post-construction runoff to preconstruction runoff for the 85th percentile storm event. However, the runoff reduction requirements only apply to projects that lie outside of jurisdictions covered by Standard Urban Storm Water Management Plan (or other more protective) post-construction requirements in either a Phase I or Phase II municipal separate storm sewer system (MS4) NPDES permit. The County and City are subject to such a permit. That program is described in the following section.

D.1.2 West Placer Storm Water Quality Design Manual

In 2013, the State Water Board established the Phase II Small MS4 General Permit (Order 2013-0001-DWQ). This now-current permit modified the previous permit (General Permit, Order 2003-0005-DWQ) by establishing stormwater management program requirements in the Order and defining the minimum acceptable elements of the municipal stormwater management program. Minimum permit requirements

were established at the time of permit issuance and are no longer left to be determined later through Regional Water Board review and approval of Storm Water Management Plans.

Small MS4s are those owned or operated by the United States, a state, city, town, borough, county, parish, district, association, or other public body (created by or pursuant to state law) having jurisdiction over disposal of sewage, industrial wastes, storm water, or other wastes, including special districts under state law such as a sewer district, flood control district or drainage district, or similar entity, or a Native American tribe or an authorized Native American tribal organization, or a designated and approved management agency under section 208 of the *Clean Water Act* that discharges to waters of the United States. Small MS4s typically support a population less than 100,000, based on the 1990 Decennial Census. The County, the City, Granite Bay Census Designated Place, the Town of Loomis, and North Auburn Census Designated Place are all identified as Permittees to Order 2013-0001-DWQ.

To comply with Order 2013-0001-DWQ, the County, the City of Roseville, the City, the City of Auburn, and the Town of Loomis jointly developed the *West Placer Storm Water Quality Design Manual* (Design Manual). The goal of the Design Manual is to provide standards that both conform to the mandates of the 2013 MS4 General and achieve the objectives of the Habitat Conservation Plan/Natural Community Conservation Plan (HCP/NCCP) (Placer County 2020).

The Design Manual includes requirements for Low-Impact Development (LID) strategies that focus on preserving key elements of a project site's pre-development hydrologic function. LID is a design strategy where storm water runoff is treated as a valuable resource that can recharge groundwater supplies, protect and enhance natural habitat and biodiversity, and add value to new development or redevelopment projects. Rather than discharging storm water runoff as a waste product, projects are designed to include a diverse set of post-construction storm water controls or BMPs that infiltrate, evapotranspire, or biotreat storm water runoff. By retaining storm water runoff on site, downstream receiving waters are provided with protection from increased pollutant loads and alterations of hydrologic functions otherwise affected by increased impervious surfaces and human activities.

D.1.3 HCP/NCCP Watershed Hydrology and Water Quality BMPs

The following BMPs are related to water quality objectives contained in the NPDES programs but are more targeted to avoidance and minimization of effects on Covered Species and go beyond the typical requirements of an SWPPP. These BMPs apply to all Covered Activities:

1) When possible, vehicles and equipment will be parked on pavement, existing roads, and previously disturbed areas. When vehicle parking areas are to be established as a temporary facility, the site will be recovered to pre-project or ecologically improved conditions within 1 year of start of groundbreaking so that effects are temporary (see General Condition 4, Temporary Effects, for the process to demonstrate temporary effects in the HCP/NCCP [Placer County, 2020]).
2) Trash generated by Covered Activities will be promptly and properly removed from the site.
3) Appropriate erosion-control measures (for example, fiber rolls, filter fences, vegetative buffer strips) will be used onsite to reduce siltation and runoff of contaminants into avoided wetlands, ponds, streams, or riparian vegetation.
    a) Erosion-control measures will be of material that will not entrap wildlife (that is, no plastic monofilament). Erosion-control blankets will be used as a last resort because of their tendency to biodegrade slowly and trap reptiles and amphibians.

b) Erosion-control measures will be placed between the area of disturbance and any avoided aquatic feature, within an area identified with highly visible markers (for example, construction and erosion-control fencing, flagging, silt barriers) prior to commencement of construction activities. Such identification will be properly maintained until construction is completed and the soils have been stabilized.

c) Fiber rolls used for erosion control will be certified by the California Department of Food and Agriculture or any agency that is a successor or receives delegated authority during the permit term as weed free.

d) Seed mixtures applied for erosion control will not contain California Invasive Plant Council–designated invasive species (http://www.cal-ipc.org/paf/) but will be composed of native species appropriate for the site or sterile non-native species. If sterile non-native species are used for temporary erosion control, native seed mixtures must be used in subsequent treatments to provide long-term erosion control and slow colonization by invasive non-native species.

4) If the runoff from the development will flow within 100 feet of a wetland or pond, vegetated storm water filtration features, such as rain gardens, grass swales, tree box filters, infiltration basins, or similar LID features to capture and treat flows, will be installed in a manner consistent with local programs and ordinances.

D.2 General Condition 3: Land Conversion

Covered Activities that would result in permanent conversion of natural land cover must pay fees or otherwise contribute to establishing the Reserve System and are subject to the maximum extent of take proposed under the Plan.

Land conversion refers broadly to an activity or process that results in the permanent conversion of a natural or semi-natural land cover to an urban, suburban, rural residential, or other artificial, built-up, or otherwise non-natural condition. It is not meant to apply when one natural or semi-natural land-cover type is converted to another natural or semi-natural land-cover type. It is also not meant to apply to changes in agricultural crop types, which is not a Covered Activity addressed by the Plan. Application of this condition is a key provision of the Plan. Land conversion allowable under the permits will be subject to an overall maximum extent of take. The proposed extent of take sets a maximum acreage of cumulative land conversion from all Covered Activities. Proposed maximums are set for several communities and are listed in Table 4-1 for permanent effects. Proposed maximums are also set for geographical Plan subareas, with some provision for flexibility in shifting allowable take between subareas.

The conservation strategy outlined in Chapter 5, Conservation Strategy, serves at a regional scale as conservation in perpetuity for Covered Species and mitigation for the effects of Covered Activities (Placer County 2020). Fees collected for land conversion will fund land acquisition, restoration, and long-term management and monitoring of similar or higher-quality land than those lands affected by Covered Activities.[1]

Covered Activities will be assessed fees based on the parameters described in Chapter 9, Costs and Funding, and summarized in Table 9-6 of the HCP/NCCP (Placer County 2020). In the Valley, the fees will

[1] The HCP/NCCP also provides additional conservation beyond mitigation. The fees, however, apply to the mitigation component of the conservation strategy.

be applied when projects affect natural, semi-natural, and other agricultural communities. These communities include the following land-cover types:

a) Grassland
b) Vernal pool complex
c) Aquatic or wetland complex
d) Riverine or riparian complex
e) Oak woodland
f) Valley Oak woodland
g) Rice agriculture
h) Field agriculture
i) Orchard and vineyard agriculture
j) Rural residential

In the Valley, the land conversion fee will not apply to ground disturbance in urban (non-natural) communities except if a special habitat fee applies. Special habitat fees for restoration and enhancement will apply to any ground disturbance to a constituent habitat regardless of community type (see Chapter 3, Physical and Biological Setting, Table 3-6 of the HCP/NCCP for a list of constituent habitats [Placer County 2020]). In urban (non-natural) communities, the land conversion fee would apply to the same area of ground disturbance as the special habitat fee.

In the Foothills, an open space fee will be assessed on ground disturbance of urban (non-natural) communities to reflect the open space and fuels management benefits of the Plan to all Foothills development. As with the Valley, special habitat fees will apply to ground disturbance in any community where a constituent habitat is present.

Chapter 9, Costs and Funding, describes how fees will be applied based on the parcel or the development area, depending on the type of Covered Activity and whether the project applicant is a Permittee or not. For projects where fees are based on the entire parcel, the project applicant can demonstrate that parts of the parcel will be fully avoided, as described in the following section (Section 6.3.1.3.1, Permanent Effect Avoidance in the PFG [Placer County 2020]) and in other conditions on Covered Activities described in this chapter. Fees will not be levied on lands that are completely avoided per the terms of this chapter. The fee calculation is described in further detail in Chapter 9 of the HCP/NCCP, Costs and Funding (Placer County 2020).

D.2.1 Permanent Effect Avoidance in the Potential Future Growth Area

The past trend toward large projects is expected to continue in the Valley and to a lesser extent, in the Foothills in the portion of the Plan Area designated as Potential Future Growth (PFG) (Components A1 and A3). These projects typically involve large tracts of undeveloped land converted to fairly dense urban or suburban uses. Open space areas may be left within the project site, but these serve mainly aesthetic, flood control, or recreational purposes rather than biological conservation. Such small, avoided areas are subject to indirect effects so that any original habitat values are difficult to manage and protect. For this reason, any open space proposed as part of a Covered Activity will be considered part of the project effects and, therefore, assumed to be permanently affected and not exempted from the Plan fees unless the open space meets avoidance criteria described as follows. See Chapter 9, Section 9.4.1.8, Timing of Development Fee Payment, for application of fees to multi-phase projects.

To qualify as “avoided,” land within the PFG must meet all the applicable natural community and Covered Species habitat requirements in Section 6.3.2, Conditions to Avoid and Minimize Effects on Specific

Natural Communities, and Section 6.3.5, Conditions to Minimize Effects on Covered Species. Avoided lands must also meet at least one of the following criteria:

1) It is a minimum of 200 contiguous acres.
2) It is located adjacent to the Reserve Acquisition Area (RAA) or adjacent to an existing reserve that together totals at least 200 acres (either a HCP/NCCP reserve or a non-HCP/NCCP reserve protected in perpetuity).
3) It is located in or abuts the Stream System boundary.
4) It contributes to meeting the goals and objectives of the Plan as described in Chapter 5, Conservation Strategy, and as determined by the Placer Conservation Authority (PCA) (that is, the PCA may want to acquire the avoided area for the Reserve System).
5) It is set aside to avoid occurrences of certain Covered Species or sensitive land-cover types per the conditions in this chapter.
6) It is required to be avoided by PCA.

The avoidance determination, including an evaluation of direct and indirect effects, will be made by the Permittee with jurisdiction over the project in consultation with PCA and will take into account such factors as the avoidance area's relationship to existing or potential reserves, edge-to-area ratio, and Stream System boundary. The Permittee may consult with PCA for guidance in determining the extent of the reduction of effects.

Any part of a project site that is deemed to have avoided take is not subject to the application of fees, and establishment of a conservation easement is not required. Avoidance does not necessarily mean that the excluded land is suitable to be credited as land to be incorporated into the Reserve System in lieu of fees (see sub-section X.2.3 for additional discussion on land in lieu of fees). If the avoided land is to be included as part of the Reserve System, the Wildlife Agencies must review and approve such inclusion.

D.2.2 Permanent Effect Avoidance for Low-Density Rural Development

Low-density rural development comprises (1) new rural residential use, (2) appurtenant or accessory activities or structures for existing rural residential uses, and (3) activities or structures for rural nonresidential land uses. The following considerations will apply to low-density rural development that is anticipated to include most non-public Covered Activities in the Conservation and Rural Development portion of the Plan Area (components A2 and A4, comprising the RAA and Existing Reserves) and in the Foothills portion of the PFG, plus some limited non-public Covered Activities in the Valley portion of the PFG.

Because low-density rural development may leave a large portion of a parcel undisturbed and where these Covered Activities occur on existing parcels already subject to fragmentation and indirect effects, fees for new rural residential development are graduated based on whether subdivision of an existing parcel occurs and the number of resulting parcels (see Chapter 9, Costs and Funding). PCA will track the estimated actual impact of rural residential development, and the graduated fee may be adjusted if impacts in the aggregate differ from the assumptions used to set the fee. For structures or activities that are appurtenant or accessory to rural residential uses, and activities or structures that support rural nonresidential land uses, land conversion fees will apply to the disturbed area footprint.

D.2.3 Land Provided In Lieu of Fees

Project applicants wishing to receive full or partial credit toward their fee obligations may offer land in lieu of fees. Details regarding land in lieu of fees are provided in Section 9.4.1.10 of the HCP/NCCP, Land Provided in Lieu of Development Fees (Placer County 2020).

D.3 General Condition 4: Temporary Effects

Covered Activities that result in temporary effects on natural land cover must pay fees and are subject to the maximum extent of take proposed under the Plan.

In addition to verifying the land cover on the project site as described in Item 3: Community and Constituent Habitat Types on Site and Baseline Land-cover Map Consistency of the HCP/NCCP, project applicants of Covered Activities that have temporary effects are required to provide documentation related to the nature of the effects (Placer County 2020). To qualify for the temporary effect fee, applicants must document pre-project conditions and propose performance standards for the affected natural community as part of their participation package. The purpose of these performance standards is to demonstrate to the local jurisdiction that temporary impact sites will be returned to pre-project conditions within 1 year of starting ground disturbance at that location. Performance standards will vary based on the natural community type affected, but they should include metrics such as percentage vegetative cover, vegetation height, restored topography, or restored hydrology. One year after project groundbreaking, the applicant will provide the Permittee with jurisdiction over the project with a written assessment of how the performance standards were met. Based on this information, the Permittee will determine whether the project impacts were actually temporary. If it is determined the effects remain 1 year after groundbreaking activities have commenced, the effects will be considered permanent, and fees will be reassessed based on those effects, as described in General Condition 3 of the HCP/NCCP, Land Conversion (Placer County 2020).

Temporary effects allowable under the permits will be subject to overall maximum effects. If a plot of land is subjected to temporary disturbance more than once, that temporary effect is only counted once in the cumulative tally of maximum effects. Proposed temporary effect limits are set for several communities and are listed in Table 4-3 of the HCP/NCCP (Placer County 2020). Proposed maximum temporary effects under the permits are established for geographical Plan subareas, with some provision for flexibility between subareas.

Within 2 years of permit issuance, PCA will provide guidelines to all applicants on recommended performance standards for each affected natural community that, if met, would meet the intent of the temporary impacts. At any time, Permittees may confer with PCA in the review and approval of the performance standards.

D.4 General Condition 5: Conduct Worker Training

If project-specific conditions for avoidance or minimization apply during construction, all project construction personnel will participate in a worker environmental training program that will educate workers regarding the Covered Species and their habitats, the need to avoid impacts, state and federal protection, and the legal implications of violating environmental laws and regulations.

This condition applies to projects where compliance with the conditions on Covered Activities would result in one or more avoidance and minimization requirements applied during construction (for example,

maintenance of an avoidance buffer, placement of exclusion fencing). At a minimum, this training may be accomplished through "tailgate" presentations at the project site and the distribution of informational brochures, with descriptions of sensitive biological resources and regulatory protections, to construction personnel prior to initiation of construction work.

D.5 Regional Public Projects Condition 3: Operations and Maintenance Best Management Practices

Operations and maintenance (O&M) BMPs for applicable transportation or other infrastructure projects in the rural portion of the Plan Area will be implemented where appropriate and feasible to reduce the effects of construction on natural communities and native species.

This condition applies to O&M activities (1) on public lands and (2) on private lands where the activities are authorized pursuant to land use approvals granted by the Permittees and governed by conditions of approval. O&M activities include utility line and facilities maintenance, public or private road maintenance, vegetation management, and mitigation monitoring. Road and utility maintenance activities have the potential to affect Covered Species directly through management activities such as mowing or resurfacing and may indirectly affect Covered Species by introducing sediment and other pollutants into downstream waterways or by spreading invasive species.

- Most O&M will occur as ongoing activities. The determination regarding which BMPs will be required and how they will be monitored will be made as part of the HCP/NCCP participation package described in Section 6.2, Program Participation: Receiving Take Authorization under the Plan.
- Projects occurring in streams or the Stream System will also comply with Stream System Condition 1, Stream System Avoidance and Minimization; and Stream System Condition 2, Stream System Mitigation: Restoration, as appropriate (Placer County 2020).

D.5.1 Operations and Maintenance Best Management Practices

a) Silt fencing or other sediment control devices will be installed down-slope from maintenance activities that disturb soil to minimize the transport of sediment offsite.

b) In the course of rural road maintenance, no erodible materials will be deposited into watercourses. Brush, loose soils, or other debris material will not be stockpiled within stream channels (including road-side drainage ditches) or on adjacent banks where it could be washed into the channel or drainage ditch.

c) Alternatives, such as mechanical control, will be considered to substantially lessen any significant effect on the environment before the use of pesticides. Integrated pest-management BMPs will be used for all vegetation control. Limitations may occur because of fire management requirements and local integrated pest-management ordinances.

d) Herbicides and other pesticides will be used only when necessary and applied in strict compliance with label requirements and state and federal regulations. Herbicides and pesticides will be applied only when weather conditions minimize drift and effects on nontarget sites. Herbicide and pesticide use is not a Covered Activity under the federal permits.

e) Maintenance activities on rural roads adjacent to natural land-cover types will be seasonally timed, when safety permits and regulatory restrictions allow, avoiding or minimizing adverse effects on active nests of resident and migratory birds, including bird Covered Species. This measure is particularly relevant for right-of-way mowing, brush clearing, and tree trimming. Project applicants will coordinate

with PCA to develop work schedules that optimize logistic, safety, and financial needs while minimizing potential effects on nesting birds.

f) Mowing equipment will be thoroughly cleaned before use, so it is free of noxious weeds (as defined by the U.S. Department of Agriculture in cooperation with the California Department of Food and Agriculture) and does not introduce such weeds to new areas.

g) Ground-disturbing road-maintenance activities, such as regrading, will be timed so that the moisture content of the soil will support soil re-compaction and reduce the need for an imported water source to achieve soil compaction. Similarly, activities will be timed so that the use of heavy equipment will not result in the creation of mud puddles and ruts.

h) Regularly scheduled visual inspection of all roads will be conducted to identify sites where erosion is contributing sediment to local streams and stabilize eroding areas.

i) Annual clearing of flow lines (for example, culverts and ditches) will be conducted such that flow lines are maintained free of debris.

j) Existing roads will be used for access and disturbed areas for staging as site constraints allow. Off-road travel will avoid sensitive communities.

k) Utility pole or line replacement and maintenance will follow the suggested practices of the Avian Power Line Interaction Committee's publication *Reducing Avian Collisions with Power Lines: The State of the Art in 2012* (Avian Power Line Interaction Committee 2012).

D.6 Species Condition 1, Swainson's Hawk

Conditions for the Swainson's hawk are based on avoidance, minimization, and mitigation guidelines from the Draft Staff Report: Recommended Mitigation Strategies for the Swainson's Hawk (*Buteo swainsoni*) within the California Breeding Range (California Department of Fish and Game 1994) and measures developed to avoid and minimize effects on Swainson's hawks by activities covered by the East Contra Costa County HCP/NCCP (2006).

D.6.1 Survey Requirements

Surveys for Swainson's hawk nests are required on the following communities in the Valley, within 0.25 mile (1,320 feet) of the project site:

- Valley oak woodland
- Grassland (if trees are present)
- Riparian
- Semi-natural (if trees are present)
- Other agricultural (if trees are present)
- Rural residential (if trees are present)
- Urban (if trees are present)

In addition, a California Natural Diversity Database (CNDDB) record search is required to determine whether any active nests are present within 1,320 feet of the project site. A nest is assumed active if it has been used within the previous 5 years.

Swainson's Hawk 1. Swainson's hawk surveys and CNDDB record searches are required well in advance of project construction to determine whether Swainson's hawk are nesting on or within 1,320 feet of the project site. If the project cannot be designed to avoid active Swainson's hawk nest trees, and construction

must occur during the nesting season (approximately February 1 to September 15), a preconstruction survey must be conducted no more than 15 days prior to ground disturbance. Surveys will be conducted in a manner consistent with current guidelines (Swainson's Hawk Technical Advisory Committee 2000), with the following exceptions:

- Surveys will be required within a 1,320-foot radius around the project site. In instances where an adjacent parcel is not accessible to survey because the qualified biologist was not granted permission to enter, the qualified biologist will scan all potential nest tree(s) from the adjacent property, road sides, or other safe, publicly accessible viewpoints, without trespassing, using binoculars or a spotting scope to look for Swainson's hawk nesting activity.
- Surveys will be required from February 1 to September 15 (or sooner if it is found that birds are nesting earlier in the year).
- If a Swainson's hawk nest is located and presence confirmed, only one follow-up visit is required (to avoid disturbing the nest with repeated visits).

D.6.2 Applicable Measures

If surveys determine that a Swainson's hawk nest is occupied, the project must adopt the minimization measure listed as follows:

Swainson's Hawk 2. During the nesting season (approximately February 1 to September 15 or sooner if it is found that birds are nesting earlier in the year), ground-disturbing activities within 1,320 feet of occupied nests or nests under construction will be prohibited to minimize the potential for nest abandonment. While the nest is occupied, activities outside the buffer can take place, provided they do not stress the breeding pair.

If the active nest site is shielded from view and noise from the project site by other development, topography, or other features, the project applicant can apply to PCA for a reduction in the buffer distance or waiver of this avoidance measure. A qualified biologist would be required to monitor the nest and determine that the reduced buffer does not cause nest abandonment. If a qualified biologist determines nestlings have fledged, Covered Activities can proceed normally.

Swainson's Hawk 3. Active (within the last 5 years) nest trees on a project site will not be removed during the nesting season. If a nest tree must be removed (as determined by PCA), tree removal will occur only between September 15 and February 1, after any young have fledged and are no longer dependent on the nest and before breeding activity begins.

D.6.3 Construction Monitoring

Swainson's Hawk 4. Construction monitoring will be conducted by a qualified biologist and will focus on confirming that activities do not occur within the buffer zone. The qualified biologist performing the construction monitoring will verify that effects on Swainson's hawks are minimized. If monitoring indicates that construction outside of the buffer is affecting nesting, the buffer will be increased if space allows (for example, move staging areas farther away). If space does not allow, construction will cease until the young have fledged from the nest (as confirmed by a qualified biologist).

Monitoring frequency will be approved by PCA and based on the frequency and intensity of construction activities and the likelihood of disturbance of the active nest. In most cases, monitoring will occur at least every other day, but in some cases, daily monitoring may be appropriate to minimize direct effects on

Swainson's hawks. The qualified biologist will train construction personnel on the avoidance procedures and buffer zones.

D.7 Species Condition 3, Western Burrowing Owl

The following measures will be implemented to avoid or minimize effects of Covered Activities on western burrowing owls. This condition is based on the *Staff Report on Burrowing Owl Mitigation* (California Department of Fish and Game 2012) and measures to avoid and minimize effects in the East Contra Costa County HCP/NCCP (Jones & Stokes Associates 2006).

D.7.1 Survey Requirements

Surveys for burrowing owl must be conducted for projects that occur on the following communities and features in the Valley, or as determined by a qualified biologist, so that occupied burrowing owl nests are not taken:

- Grassland
- Vernal pool complex
- Semi-natural (agriculture)
- Other agricultural
- Rural residential and urban community if potential burrow sites are available
- Human-made structures such as underground pipes, irrigation canal banks, ditches
- Banks of intermittent drainages if potential burrow sites are available

Burrowing Owl 1. Two surveys will be conducted within 15 days prior to ground disturbance to establish the presence or absence of burrowing owls. The surveys will be conducted at least 7 days apart (if burrowing owls are detected on the first survey, a second survey is not needed) for both breeding and nonbreeding season surveys. All burrowing owls observed will be counted and mapped.

During the breeding season (February 1 to August 31), surveys will document whether burrowing owls are nesting in or within 250 feet of the project area.

During the nonbreeding season (September 1 to January 31), surveys will document whether burrowing owls are using habitat in or directly adjacent to any area to be disturbed. Survey results will be valid only for the season (breeding or nonbreeding) during which the survey was conducted.

The qualified biologist will survey the proposed footprint of disturbance and a 250-foot radius from the perimeter of the proposed footprint to determine the presence or absence of burrowing owls. The site will be surveyed by walking line transects, spaced 20 to 60 feet apart, adjusting for vegetation height and density. At the start of each transect and at least every 300 feet, the surveyor, with use of binoculars, will scan the entire visible project area for burrowing owls. During walking surveys, the surveyor will record all potential burrows used by burrowing owls, as determined by the presence of one or more burrowing owls, pellets, prey remains, whitewash, or decoration. Some burrowing owls may be detected by their calls; therefore, observers will also listen for burrowing owls while conducting the survey. Adjacent parcels under different land ownership will be surveyed only if access is granted. If portions of the survey area are on adjacent sites for which access has not been granted, the qualified biologist will get as close to the inaccessible area as possible and use binoculars to look for burrowing owls.

The presence of burrowing owl or their sign anywhere on the site or within the 250-foot accessible radius around the site will be recorded and mapped. Surveys will map all burrows and occurrence of sign of

burrowing owl on the project site. Surveys must begin 1 hour before sunrise and continue until 2 hours after sunrise (3 hours total) or begin 2 hours before sunset and continue until 1 hour after sunset. Additional time may be required for large project sites.

D.7.2 Applicable Measures

If a burrowing owl or evidence of presence at or near a burrow entrance is found to occur within 250 feet of the project site, the following measures must be implemented:

Burrowing Owl 2. If burrowing owls are found during the breeding season (approximately February 1 to August 31), the project applicant will do the following:

- Avoid nest sites that could be disturbed by project construction during the remainder of the breeding season or while the nest is occupied by adults or young (occupation includes individuals or family groups foraging on or near the site following fledging).
- Establish a 250-foot nondisturbance buffer zone around nests. The buffer zone will be flagged or otherwise clearly marked. Should construction activities cause the nesting bird to vocalize, make defensive flights at intruders, or otherwise display agitated behavior, then the exclusionary buffer will be increased such that activities are far enough from the nest so that the bird(s) no longer display this agitated behavior. The exclusionary buffer will remain in place until the chicks have fledged or as otherwise determined by a qualified biologist. Construction may only occur within the 250-foot buffer zone during the breeding season only if a qualified raptor biologist monitors the nest and determines that the activities do not disturb nesting behavior, or the birds have not begun egg-laying and incubation, or that the juveniles from the occupied burrows have fledged and moved offsite. Measures such as visual screens may be used to further reduce the buffer with Wildlife Agency approval, provided a biological monitor confirms that such measures do not cause agitated behavior.

Burrowing Owl 3. If burrowing owls are found during the nonbreeding season (approximately September 1 to January 31), the project applicant will establish a 160-foot buffer zone around active burrows. The buffer zone will be flagged or otherwise clearly marked. Measures such as visual screens may be used to further reduce the buffer with Wildlife Agency approval, provided a biological monitor confirms that such measures do not cause agitated behavior.

Burrowing Owl 4. During the nonbreeding season only, if a project cannot avoid occupied burrows after all alternative avoidance and minimization measures are exhausted, as confirmed by the Wildlife Agencies, a qualified biologist may passively exclude birds from those burrows. A burrowing owl exclusion plan must be developed by a qualified biologist, consistent with the most recent guidelines from the Wildlife Agencies (for example, California Department of Fish and Game 2012), and submitted to and approved by PCA and the Wildlife Agencies. Burrow exclusion will be conducted for burrows located in the project footprint and within a 160-foot buffer zone as necessary.

D.7.3 Construction Monitoring

Burrowing Owl 5. A biological monitor will be present onsite daily to verify that no Covered Activities occur within the buffer zone. The qualified biologist performing the construction monitoring will confirm that effects on burrowing owls are minimized. If monitoring indicates that construction outside of the buffer is affecting nesting, the buffer will be increased if space allows (for example, move staging areas farther away). If space does not allow, construction will cease until the young have fledged from the nests in the

colony (as confirmed by a qualified biologist) or until the end of the breeding season, whichever occurs first.

A biological monitor will conduct training of construction personnel on the avoidance procedures, buffer zones, and protocols in the event that a burrowing owl flies into an active construction zone (that is, outside the buffer zone).

D.8 Species Condition 4, Tricolored Blackbird

The following measures will be implemented to avoid or minimize effects of Covered Activities on tricolored blackbird nesting colonies and actively used foraging habitat.

D.8.1 Survey Requirements

PCA will provide a map of active colony sites to help determine where a survey for tricolored blackbird must occur. A colony site is considered active if it has been used for nesting in the prior 10 years. Surveys for nesting tricolored blackbird must occur if the PCA-provided map indicates an active colony site occurs on the project site or within 1,300 feet of a colony site. Surveys for nesting tricolored blackbird must also be conducted for project sites below 300 feet elevation, within the following communities:

- Aquatic/Wetland Complex
- Field Agriculture when planted in wheat, grain, triticale, or similar crop
- Patches of thorny or spiny vegetation such as blackberry, nettle, or thistle (blackberry is often associated with the riparian constituent habitat)

If an active colony site is within 3 miles of the project site, and construction will occur within the nesting season (March 15 to July 31), then a survey of foraging habitat at and immediately surrounding the project site will be conducted within the following communities:

- Grassland
- Rice agriculture
- Field agriculture
- Aquatic or wetland complex
- Vernal pool complex

Tricolored Blackbird 1. Preconstruction Surveys – Nest Colony Sites. Prior to initiation of Covered Activities in project work areas and within 1,300 feet of project work areas, the qualified biologist(s) will conduct preconstruction surveys to evaluate the presence of tricolored blackbird nesting colonies. In instances where an adjacent parcel is not accessible to survey because the qualified biologist was not granted permission to enter, the qualified biologist will scan potential nest colony site(s) from the adjacent property, road sides, or other safe, publicly accessible viewpoints, without trespassing, using binoculars or a spotting scope to look for tricolored blackbird nesting activity.

Surveys should be conducted at least twice with at least 1 month between surveys during the nesting season 1 year prior to initial ground disturbing for the Covered Activity, if feasible, and during the year of ground disturbing for the Covered Activity (required). If Covered Activities will occur in the project work area during the nesting season, three surveys will be conducted within 15 days prior to the Covered Activity, with one of the surveys occurring within 5 days prior to the start of the Covered Activity. The

survey methods will be based on Kelsey (2008) or a similar protocol approved by PCA and the Wildlife Agencies based on site-specific conditions.

If the first survey indicates that suitable nesting habitat is not present on the project site or within 1,300 feet of the project work area, additional surveys for nest colonies are not required. Preconstruction surveys are still required, however, as described in the following sub-section, Tricolored Blackbird 2.

Tricolored Blackbird 2. Preconstruction Surveys – Foraging Habitat. If an active colony is known to occur within 3 miles of the project site, a qualified biologist will conduct two surveys of foraging habitat within the project site and within a 1,300-foot radius around the project site to determine whether foraging habitat is being actively used by foraging tricolored blackbirds. The qualified biologist will map foraging habitat, as defined by the land cover types listed previously, within a 1,300-foot radius around the project site to delineate foraging habitat that will be surveyed. The surveys will be conducted approximately 1 week apart, with the second survey occurring no more than 5 calendar days prior to ground-disturbing activities. Two surveys are required because tricolored blackbirds may not visit a site during a single survey period, as they may be foraging elsewhere.

Each survey will last 4 hours and begin no later than 8:00 a.m. The qualified biologist will survey the entire project site and a 1,300-foot radius around the project site by observing and listening from accessible vantage points that provide views of the entire survey area. If such vantage points are not available, the qualified biologist will survey from multiple vantage points so that the entire survey area is surveyed. In instances where an adjacent parcel is not accessible to survey because the qualified biologist was not granted permission to enter, the qualified biologist will scan all foraging habitat from the adjacent property, road sides, or other safe, publicly accessible viewpoints, without trespassing, by using binoculars or a spotting scope to look for tricolored blackbird foraging activity. The qualified biologist will map the locations on the site and within a 1,300-foot radius around the project site where tricolored blackbirds are observed and record an estimate of the numbers of tricolored blackbirds observed (estimated by 10s, 100s, or 1,000s), the frequency of visits (for example, if individuals or a flock makes repeated foraging visits to the site during the survey period), whether tricolored blackbirds are leaving the site with food in their bills, and the direction they fly to and from.

D.8.2 Applicable Measures

If a tricolored blackbird nesting colony is found, the project applicant will abide by the following measures:

Tricolored Blackbird 3. Nesting Colony – Avoidance and Minimization. Construction activity or other Covered Activities that may disturb an occupied nest colony site, as determined by a qualified biologist, will be prohibited during the nesting season (March 15 through July 31 or until the chicks have fledged or the colony has been abandoned on its own) within a 1,300-foot buffer zone around the nest colony, to the extent practicable. The intent of this condition is to prevent disturbance to occupied nest colony sites on or near project sites so they can complete their nesting cycle. This condition is not intended to preserve suitable breeding habitat on project sites; rather, it allows impacts to active colony sites to only take place once the site is no longer occupied by the nesting colony. The buffer will be applied to extend beyond the nest colony site as follows:

- If the colony is nesting in a wetland, the buffer must be established from the outer edge of hydric vegetation associated with the colony.
- If the colony is nesting in nonwetland vegetation (for example, Himalayan blackberry), the buffer must be established from the edge of the colony substrate.

This buffer may be modified to a minimum of 300 feet, with written approval from the Wildlife Agencies, in areas with dense forest, buildings, or other features between the Covered Activities and the occupied active nest colony; where there is sufficient topographic relief to protect the colony from excessive noise or visual disturbance; where sound curtains have been installed; or other methods developed in consultation with the Wildlife Agencies where conditions warrant reduction of the buffer distance. If tricolored blackbirds colonize habitat adjacent to Covered Activities after the activities have been initiated, the project applicant will reduce disturbance through establishment of buffers or noise reduction techniques or visual screens, as determined in consultation with the Wildlife Agencies and PCA. The buffer must be clearly marked to prevent project-related activities from occurring within the buffer zone.

Tricolored Blackbird 4. Actively Used Foraging Habitat – Avoidance and Minimization. Construction activity or other Covered Activities that may disturb foraging tricolored blackbirds, as determined by a qualified biologist, will be prohibited within 1,300-feet of the foraging site to the extent feasible during the nesting season (March 15 through July 31 or until the chicks have fledged or the colony has been abandoned on its own) if the foraging habitat was found to be actively used by foraging tricolored blackbirds during at least one of the two foraging habitat surveys conducted under Tricolored Blackbird 2. If survey results indicate that the area provides marginal foraging habitat (for example, tricolored blackbirds were observed foraging, but only briefly, and most were not successfully capturing prey), or site-specific conditions may warrant a reduced buffer, PCA technical staff will consult with the Wildlife Agencies to evaluate whether the project needs to avoid the foraging habitat or whether a reduced buffer may be appropriate. In such cases, additional surveys may be needed to assess site conditions and the value of the foraging habitat.

The buffer must be clearly marked to prevent project-related activities from occurring within the buffer zone. This buffer may be modified to a minimum of 300 feet, with written approval from the Wildlife Agencies, in areas with dense forest, buildings, or other features between the Covered Activities and the actively used foraging habitat; where there is sufficient topographic relief to protect foraging birds from excessive noise or visual disturbance; or in consultation with the Wildlife Agencies if other conditions warrant reduction of the buffer distance. If tricolored blackbird begin using foraging habitat adjacent to Covered Activities after the activities have been initiated, the project applicant will reduce disturbance by establishing buffers or noise reduction techniques or visual screens, as determined in consultation with the Wildlife Agencies and PCA.

Similar to Tricolored Blackbird 3, the intent of this condition is to allow actively nesting colonies on or near project sites to complete their nesting cycle prior to the loss of the foraging habitat onsite. Protecting actively used foraging habitat during the nesting season will help the tricolored blackbird nesting colony complete its nesting cycle, as loss of valuable foraging habitat could cause the nesting colony to fail. (This condition is not intended to preserve suitable foraging habitat on project sites in the long term.)

D.8.3 Construction Monitoring

Tricolored Blackbird 5. Nesting Colony – Construction Monitoring. Active nesting colonies that occur within the no-disturbance buffer will be monitored by the qualified biologist(s) to verify the Covered Activity is not disrupting the nesting behavior of the colony. The frequency of monitoring will be approved by PCA and based on the frequency and intensity of construction activities and the likelihood of disturbance of the active nest. In most cases, monitoring will occur at least every other day, but in some cases, daily monitoring may be appropriate to confirm that direct effects on tricolored blackbird are minimized. The biologist will train construction personnel on the avoidance procedures and buffer zones.

If the qualified biologist(s) determines that the Covered Activity is disrupting nesting or foraging behavior, the qualified biologist(s) will notify the project applicant immediately, and the project applicant will notify PCA within 24 hours to determine additional protective measures that can be implemented. The qualified biologist(s) will have the authority to stop Covered Activities until additional protective measures are implemented. Additional protective measures will remain in place until the qualified biologist(s) determine(s) tricolored blackbird behavior has normalized. If additional protective measures are ineffective, the qualified biologist(s) will have the authority to stop Covered Activities as needed until the additional protective measures are modified and nesting behavior of tricolored blackbird returns to normal.

Additional protective measures may include increasing the size of the buffer (within the constraints of the project site), delaying Covered Activities (or the portion of Covered Activities causing the disruption) until the colony is finished breeding and chicks have left the nest site, temporarily relocating staging areas, or temporarily rerouting access to the project work area. The project proponent will notify PCA and Wildlife Agencies within 24 hours if nests or nestlings are abandoned. If the nestlings are still alive, the qualified biologist(s) will work with the Wildlife Agencies to determine appropriate actions for salvaging the eggs or nestlings. Notification to PCA and Wildlife Agencies will be via telephone or email, followed by a written incident report. Notification will include the date, time, location, and circumstances of the incident.

Tricolored Blackbird 6. Actively Used Foraging Habitat – Construction Monitoring. Foraging habitat within the buffer will be monitored by the qualified biologist(s) to verify that the Covered Activity is not disrupting tricolored blackbird foraging behavior. The frequency of monitoring will be approved by PCA and based on the frequency and intensity of construction activities and the likelihood of disturbance of foraging tricolored blackbirds. In most cases, monitoring will occur at least every other day, but in some cases, daily monitoring may be appropriate to confirm that effects on tricolored blackbird are minimized. The biologist will train construction personnel on the avoidance procedures and buffer zones.

If the qualified biologist(s) determines that the Covered Activity is disrupting foraging behavior, the qualified biologist(s) will notify project applicant immediately, and the project applicant will notify PCA within 24 hours to determine additional protective measures that can be implemented. The qualified biologist(s) will have the authority to stop Covered Activities until additional protective measures are implemented. Additional protective measures will remain in place until the qualified biologist(s) determine(s) tricolored blackbird behavior has normalized. If additional protective measures are ineffective, the qualified biologist(s) will have the authority to stop Covered Activities as needed until the additional protective measures are modified and foraging behavior of tricolored blackbird returns to normal. Additional protective measures may include increasing the size of the buffer (within the constraints of the project site), temporarily relocating staging areas, or temporarily rerouting access to the project work area.

D.9 Species Condition 8, Valley Elderberry Longhorn Beetle

The following measures will be implemented to avoid or minimize effects of Covered Activities on valley elderberry longhorn beetle.

Surveys for valley elderberry longhorn beetle are required for Covered Activities within the following habitat features when below 650 feet elevation (above mean sea level):

a) Riparian constituent habitat

b) Valley oak woodland community

c) Stream system (excluding frequently disked or flooded agricultural lands, such as rice, that would not likely support elderberry shrubs)

The project applicant will apply avoidance and minimization measures as specified in the U.S. Fish and Wildlife Services' (USFWS's) *Conservation Guidelines for the Valley Elderberry Longhorn Beetle* (USFWS 1999b) or the current Wildlife Agency-approved avoidance and minimization protocol. When take is authorized, the project applicant must coordinate with PCA to provide transplants and seedlings or cuttings for planting in suitable habitat on the Reserve System, consistent with the USFWS Guidelines and Framework. Project-by-project mitigation requirements for valley elderberry longhorn beetle cannot be applied to the restoration requirements of 6.3.2.2.3 (Community Condition 2.3, Riverine and Riparian Restoration) for a project's associated riparian native tree and shrub impacts to be planted as replacement habitat (that is, mitigation for impacts to valley elderberry longhorn beetle [transplants and plantings of seedlings and cuttings] does not count as mitigation for impacts to riverine and riparian [restoration of riverine and riparian]). The distinction between valley elderberry longhorn beetle impacts and riverine and riparian impacts will be addressed through project-specific mitigation requirements that provide for restoration of natural communities, including riverine and riparian complex (that is, restoration dependent on effects; see Table 5-4 of the HCP/NCCP [Placer County 2020]).

D.10 Species Condition 10: Vernal Pool Fairy Shrimp and Vernal Pool Tadpole Shrimp

Surveys are required in vernal pools that will be lost to Covered Activities to determine the occupancy rate of vernal pool fairy shrimp and vernal pool tadpole shrimp in these wetlands. These occupancy rates will be used to calculate the Occupancy Rate Standards[2] for these species. The Occupancy Rate Standards will help PCA protect, restore, and create vernal pools that are occupied by vernal pool fairy shrimp and vernal pool tadpole shrimp at a rate and quality equal to or greater than vernal pools lost to Covered Activities. The Occupancy Rate Standards will be determined after at least 37 wetted acres of vernal pools have been surveyed. Existing data (that is, data collected prior to issuance of the state and federal permits) collected within the PFG will count toward the requirement to survey a minimum of 37 wetted acres of vernal pools if the surveys were conducted using USFWS-established or -approved protocols, and data are sufficient to quantify occupancy rates. Once the Occupancy Rate Standards are established and approved by the Wildlife Agencies, no further vernal pool occupancy surveys will be required for sites to be affected under the Plan. See HCP/NCCP Section 5.3.1.6.10, Vernal Pool Branchiopods, for more details on the Occupancy Rate Standards and the Plan's requirements to protect, enhance, restore, and create habitat on the Reserve System occupied by vernal pool fairy shrimp and vernal pool tadpole (Placer County 2020).

D.10.1 Survey Requirements

Wet-season surveys to determine occupancy of vernal pools by vernal pool fairy shrimp and vernal pool tadpole shrimp will be required during the Initial Survey Phase. PCA will inform the applicant if the Plan is in the Initial Survey Phase and surveys are required.

Vernal Pool Fairy Shrimp and Tadpole Shrimp 1. Wet-season surveys will be conducted for vernal pool fairy shrimp and vernal pool tadpole shrimp in vernal pools, as determined by wetland delineation (See Section 6.2.4.4, Item 4: Mapping HCP/NCCP Aquatic Features for details [Placer County 2020]). The

[2] The Occupancy Rate Standard is the proportion of occupied vernal pools relative to all vernal pools sampled, expressed as a percentage. The Occupancy Rate Standard will be represented in two ways: as an Area-Based Occupancy Rate Standard and a Pool-Based Occupancy Rate Standard. See the following footnotes for more details.

qualified biologist will conduct protocol-level wet-season surveys, using modified Guidelines, as approved by USFWS. Modifications include requiring that all vernal pools at a site be surveyed, rather than allowing for the survey to be terminated when presence on a project site is confirmed. This modification is necessary to obtain data on presence and absence in all of the available vernal pools, to facilitate the determination of the Occupancy Rate Standards. This, and other exceptions and additions to the Guidelines, are as follows:

- If presence is confirmed for vernal pool fairy shrimp and vernal pool tadpole shrimp in an individual vernal pool, surveys may be stopped for that vernal pool.
- All vernal pools on the project site must be surveyed. Surveys cannot be suspended prior to completion, as allowed by the Guidelines, if one or more of the six listed large branchiopods, identified in the Guidelines is determined to be present.
- The Guidelines define a complete survey as consisting of one wet-season and one dry-season survey conducted and completed in accordance with the Guidelines within a 3-year period. For the purposes of the Plan, only one wet-season survey is required; dry-season surveys are not required. Applicants must plan ahead to allow sufficient time to complete these surveys.
- Data that will be collected at each vernal pool surveyed during the wet-season survey will include the presence or absence of vernal pool fairy shrimp and vernal pool tadpole shrimp, species identity and the estimated abundance (10s, 100s, 1,000s) of immature and mature vernal pool fairy shrimp and vernal pool tadpole shrimp present, and estimated maximum surface area of the vernal pool. Other information on the USFWS data sheet are not required to be collected (that is, air and water temperature, average and estimated maximum depth of the vernal pool, presence of nontarget crustaceans, insects, and platyhelminths, and habitat condition). This will allow surveys to be conducted more efficiently, while providing the essential information necessary to calculate the Pool-based Occupancy Rate Standard[3] and the Area-based Occupancy Rate Standard[4]. Because these vernal pools will be affected by Covered Activities, collection of additional information is not necessary.
- Information will be recorded on the PCA-provided data sheet, which will be the USFWS data sheet (included as Appendix A to the Guidelines), modified to include the previously noted information.
- Voucher specimens will not be collected during wet-season surveys unless the identity of the mature shrimp is uncertain and cannot be identified in the field. The Guidelines allow for a limited number of voucher specimens to be collected for each vernal pool. For the purpose of the Plan, the modified survey protocol further limits the collection of voucher specimens to instances where identity is uncertain.

The biologist conducting a survey for vernal pool fairy shrimp and vernal pool tadpole shrimp should participate in the wetland delineation to map the area of each vernal pool. If the biologist cannot participate in the wetland delineation, and the wetland delineation does not provide area for each vernal pool, the biologist will conduct follow-up surveys to map the perimeter of each vernal pool with a global

[3] The Pool-based Occupancy Rate Standard is defined as the total number of vernal pools occupied by a covered branchiopod species divided by the total number of vernal pools surveyed and expressed as the percentage of occupied pools and seasonal swales. A pool-based Occupancy Rate Standard will be set for vernal pool fairy shrimp and for vernal pool tadpole shrimp individually.

[4] The Area-based Occupancy Rate Standard is defined as the total wetted area of vernal pools occupied by a covered branchiopod species divided by the total wetted area of vernal pools surveyed and is expressed as the percentage of the wetted area occupied. An Area-based Occupancy Rate Standard will be set for vernal pool fairy shrimp and for vernal pool tadpole shrimp individually.

positioning system. Each vernal pool will be given a unique identification number that will be used to track survey data collected during wet-season surveys.

D.10.2 Applicable Measures

The applicant must submit completed data sheets to the PCA prior to ground disturbance activities.

D.11 References

Avian Power Line Interaction Committee. 2012. *Reducing Collisions with Power Lines: The State of the Art in 2012*. Edison Electric Institute and Avian Power Line Action Committee. Washington, D.C.

Jones & Stokes Associates. 2006. *East Contra Costa County Habitat Conservation Plan/Natural Community Conservation Plan*. Prepared for the East Contra Costa County Habitat Conservation Planning Association, Martinez, CA. October.

Kelsey, R. 2008. *Results of the tricolored blackbird 2008 census*. Prepared for the U.S. Fish and Wildlife Service, Portland, OR.

Placer County. 2020. "Appendix A: Western Placer County Habitat Conservation Plan and Natural Community Conservation Plan." *Placer County Conservation Program*. (ICF 04406.04.) Prepared by ICF, San Francisco, CA. February.

Swainson's Hawk Technical Advisory Committee. 2000. *Recommended timing and methodology for Swainson's hawk nesting surveys in California's Central Valley*. California Department of Fish and Game 2012. May 31.