Appendix H

Water Supply Assessment

WQMP

Water Supply Assessment for
CP Logistics Vineyard LLC
9Th & Vineyard Development Project

City of Rancho Cucamonga, California

Prepared for:

CP Logistics Vineyard LLC

June 2020

Prepared By:

VALUED
ENGINEERING, INC
CIVIL ENGINEERING • LAND SURVEYING • LAND PLANNING
600 N. MOUNTAIN AVE, STE C102, UPLAND, CA 91786
PHONE: (909) 982-4601

Contents

Executive Summary 1
1 - Introduction 2
1.1 - Cucamonga Valley Water District Water Service 2
1.2 - Water Supply Planning Provisions 2
1.2.1 - California Water Code (Sections 10910-10915) 3
1.2.2 - Government Code 66473.7 3
2 - CVWD's Water Demands 4
2.1 - Historic Water Demands 4
2.2 - Projected Water Demands 4
3.0 - Water Supply Sources 8
3.1 - Chino Basin 8
3.1.1 - Chino Basin Reliability 10
3.2 – Cucamonga Basin 11
3.1.1 – Cucamonga Basin Reliability 12
3.3 – Tunnel Water 12
3.3.1 – Reliability of Tunnel Water Sources 13
3.4 – Inland Empire Utilities Agency 14
3.4.1 – SWP Water Reliability 19
3.4.1 – Metropolitan Water District of Southern California 21
3.4.2 – Recycled Water Reliability 22
4 – Future Supply 22
5 – Conclusion 24
LIST OF APPENDICES 1
APPENDIX A – 2015 UWMP GUIDEBOOK CHECKLIST 2
APPENDIX B – SBX7 – 7 VERIFICATION TABLES 3
APPENDIX C – ORDINANCE NO. 2015-5-1 4
APPENDIX D – ORDINANCE NO. 2015-6-1 5
APPENDIX E – ORDINANCE NO. 47 6
APPENDIX F – ORDINANCE NO. 48 7
APPENDIX G – 2015 UWMP TABLES 8
APPENDIX H – 60 -DAY NOTIFICATION 9
APPENDIX I – PUBLIC NOTIFICATION DOCUMENTS 10

APPENDIX J – RESOLUTION 2016-6-3 OF ADOPTION 11
APPENDIX K – CVWD ANNUAL WATER USE EFFICIENCY PROGRAMS REPORT FY 14-15 12
APPENDIX L – AWWA WATER AUDIT 13
APPENDIX M – 2015 SAFE YIELD RESET AGREEMENT 14
APPENDIX N – CHINO BASIN JUDGEMENT 15
APPENDIX O – 2007 PEACE II AGREEMENT 16
APPENDIX P – CUCAMONGA BASE JUDGEMENT (1958 DECREE) 17
EXHIBITS 18
EXHIBIT A – LOCATION MAP OF CHINO BASIN 19
EXHIBIT B – HYDROLOGIC MAP OF CHINO BASIN 20
EXHIBIT C – STIPULATING OVERLAYING AGRICULTURAL PRODUCERS 21
EXHIBIT D – OVERLYING NON-AGRICULTURAL RIGHTS 22
EXHIBIT E – APPROPRIATIVE RIGHTS 23
EXHIBIT F – OVERLYING (AGRICULTURAL) POOL 24
EXHIBIT G – OVERLYING (NON-AGRICULTURAL) 25
EXHIBIT H – APPROPRIATIVE POOL 26
EXHIBIT I – ENGINEERING APPENDIX 27
EXHIBIT J – CHINO BASIN IN LIU AREA NO. 1 28
EXHIBIT K – LEGAL DESCRIPTION OF CHINO BASIN 29

Executive Summary

This Water Supply Assessment (WSA) was prepared per requirements in Section 10912[a] of the California Water Code (CWC) based on California Senate Bill 610 of 2001 (SB610) and evaluates the water supply availability for the ***9th & Vineyard Development Project*** (Project) and what affects it will have on the existing water system. The WSA contains information from Cucamonga Valley Water District's (CVWD) adopted 2015 Urban Water Management Plan (UWMP) and CVWD's 2013 Water Supply Master Plan (Master Plan). The WSA also includes a description of the Project, water supply and demand projections and other relevant water resource information.

The Project will be served water by CVWD (see Figure 1 in the Appendix). The anticipated completion of the Project is within the 20-year planning period addressed in CVWD's adopted 2015 UWMP.

The estimated total potable water demand for the Project is approximately 53 acre-feet per year (AFY). The irrigation will not be provided by recycled water as the project is located outside the limits per Figure 4 – Recycled Water Use Map in the 2015 UWMP (see Figure 4 in the Appendix), therefore no non-potable demand is discussed. If there is an opportunity in future to connect to the recycled water, this will help offset the potable landscape demand to more cost beneficial recycled water. The net increase in the Project's estimated potable water demands have been added to future potable water demands accounted for in CVWD's adopted 2015 UWMP and 2013 Master Plan over a 20-year period through 2035, as shown in Tables 14 through 19 of the 2015 UWMP.

The present and future water supplies available to CVWD to provide water service to the project include imported water from the Metropolitan Water District of Southern California's (MWD) State Water Project (SWP) through the Inland Empire Utilities Agency (IEUA), groundwater from the Chino Basin and the Cucamonga Basin, and local surface water from tunnel sources. The inclusion of the project does not result in the demand exceeding the supply at any time over the 20-year period study.

This WSA analyzes and evaluates CVWD's historical water supplies, water rights, current UWMP's developed by CVWD and the historical and future availability of SWP water. The analysis and evaluation presented in this WSA shows that CVWD's available water supplies will be sufficient to meet all the water demands of the Project for the next twenty years through 2035, including during single and multiple dry years. With this understanding, the Project's impact on the system is "less than significant" and no mitigation measure will be required for construction.

1 - Introduction

This WSA incorporates water supply and demand projections from CVWD's 2013 Master Plan (dated February 2014), CVWD's 2015 UWMP (dated June 2016), and other adopted UWMPs prepared by regional water agencies.

The 9th & Vineyard Development Project (Project) will be reviewed by the City of Rancho Cucamonga to determine if the project meets the California Environmental Quality Act (CEQA) requirements. One of the requirements of CEQA is to produce a WSA based on water supplier demands project and analyze if the projected supply for the next 20 years can meet the demands.

1.1 - Cucamonga Valley Water District Water Service

CVWD is the water supplier to a 47 square-mile area that includes the City of Rancho Cucamonga and a portion of the cities of Upland, Ontario, Fontana, as well as some unincorporated areas of San Bernardino County. This region has approximately 200,460 customers with over 48,000 water connections[1]. There is a district service area map in Figure 1 in the Appendix.

1.2 - Water Supply Planning Provisions

The State of California has seen an increase in population and new developments which has resulted in more water demand from water suppliers. In order for water suppliers to meet the demands, State legislature has required that new developments confirm the applicable water supplier is able to supply not only the demands of the current customers but for the projected future. The regulations include California Water Code Division 6, Part 2.10, sections 10910-10915 (Water Supply Planning to Support Existing and Planned Future Use) and Government Code 66473.7, which are briefly described below. These provisions of the California Water Code and the Government Code seek to promote more collaborative planning between local water suppliers and cities/counties and require detailed information regarding water availability to be provided to city and county land use planners prior to approval of certain development projects.

This WSA was prepared pursuant to the requirements of the California Water Code and the Government Code for the approach, required information, and criteria confirming CVWD has sufficient water supplies to meet the projected demands of the Project, in addition to existing and planned future uses. The UWMP is a foundational document for compliance with the California Water Code and the Government Code. The provisions of the California Water Code and the Government Code repeatedly identify the UWMP as a planning document which can be used by a water supplier to meet the standards set forth in both statutes. The lead agency for the preparation of an Environmental Impact Report (EIR) for a proposed project, is required under California Environmental Quality Act (CEQA) guidelines Article 7 and Article 9, to consult with the water agency serving a proposed project and to include in the EIR information provided by the water agency. The lead agency must determine whether projected water supplies are sufficient to meet the demand of a project, in addition to existing and planned future water uses.

[1] *Information from 2015 CVWD Urban Water Management Plan*

1.2.1 - California Water Code (Sections 10910-10915)

California Water Code Division 6, Part 2.6, Section 10631, requires every urban water supplier to identify, as part of its UWMP, the existing and planned sources of water available to the supplier in five-year increments to 20 years. Existing law prohibits an urban water supplier which fails to prepare or submit its UWMP to the Department of Water Resources from receiving financial or drought assistance from the state until the plan is submitted.

California Water Code Division 6, Part 2.10, Sections 10910-10915 requires a Water Supply Assessment to provide a description of all water supply projects and programs which may be undertaken to meet total projected water use over the next 20 years, included with the proposed project. The California Water Code requires a city or county which determines a project is subject to the California Environmental Quality Act to identify any public water system which may supply water for proposed developments and to request those public water systems to prepare a specific WSA, including for proposed residential projects of more than 500 dwelling units. If the water demands for the proposed developments have been accounted for in a recently adopted urban water management plan, the water supplier may incorporate information contained in that plan to satisfy certain requirements of a WSA. The California Water Code requires the assessment to include, along with other information, an identification of existing water supply entitlements, water rights, or water service contracts relevant to the identified water supply for the proposed project and the quantities of water received in prior years pursuant to those entitlements, rights, and contracts.

The California Water Code also requires the public water system, or the city or county, as applicable, to submit its plans for acquiring additional water supplies if that entity concludes water supplies are, or will be, insufficient.

1.2.2 - Government Code 66473.7

Government Code 66473.7 prohibits approval of a tentative map, or a parcel map for which a tentative map was not required, or a development agreement for a subdivision of property of more than 500 dwelling units, except as specified, including the design of the subdivision or the type of improvement, unless the legislative body of a city or county or the designated advisory agency provides written verification from the applicable public water system that a sufficient water supply is available or, in addition, a specified finding is made by the local agency that sufficient water supplies are, or will be, available prior to completion of the project. Sufficient water supply is the total water supply available during normal, single-dry, and multiple-dry years within a 20-year projection which will meet the projected demand of the Project, in addition to existing and planned future water uses.

2 - CVWD's Water Demands

2.1 - Historic Water Demands

Table 1 below provides CVWD's historical water metered consumption from Calendar year 2007 to 2019. CVWD's total water metered consumption have ranged from 41,048 Acre Feet per Year (AFY) to 59,707 AFY, with an average demand of approximately 49,098 AFY.

Table 1. (Historical Water Metered Consumption FY 2007-2019)

Calendar Year Ending	Total Water Consumption
	AF (Acre-feet)
2007	58,370
2008	55,547
2009	51.829
2010	45,381
2011	46,398
2012	48,756
2013	48,885
2014	50,060
2015	39,233
2016	38,934
2017	42,981
2018	42,808
2019	41,203
Average	46,953

2.2 - Projected Water Demands

The water demands for this Project will solely consist of industrial warehouse buildings and landscape irrigation demands. The Project will include three warehouse buildings, with the largest being at 636,580 square feet and the smallest being at 130,531 square feet in size. The total Project site footprint is approximately 47.07 acres.

The projected water demand for the industrial warehouse development is estimated by multiplying the planned acreage of the developed site (47.07 acres of industrial warehouse development) by an industrial water use rate of 1,000 gallons per day (gpd) per acre[2]. The estimated water demand for the industrial area of the Project is approximately 53 AFY (or 47.07 acres x (0.00112 AFY / 1 gpd)).

[2] *Water use factor for typical "industrial" classifications provided by Cucamonga Valley Water District are derived from recorded water use data in industrial areas with CVWD's service area and City of Fontana.*

Table 2 summarizes the projected water demands through 2035 for CVWD's service area including the demands from the Project. According to the current phasing plan, Project construction will begin in 2020 and will be completed by 2021.

Table 2. Projected Water Use Demands for CVWD, Including Project (AFY)

YEAR	2020	2025	2030	2035
POTABLE WATER DEMANDS				
CVWD Projected Potable Water Demands	58,900	61,300	63,700	63,700
Additional Potable Water Demands (Project)				
1. Building 1 site (28.45 acres)[3]	0	**32**	**32**	**32**
2. Building 2 site (5.80 acres)[3]	0	**7**	**7**	**7**
3. Building 3 site (12.83 acres)[3]	0	**14**	**14**	**14**
Total CVWD Projected Potable Water Demands	**58,900**	**61,353**	**63,753**	**63,753**

[3] Conversion factor from Gallons Per Day (GPD) to Acre Feet per Year (AFY) is (0.00112 AFY/GPD).

Table 3. CVWD's Future Water Supplies in Normal Years (AFY)

Year		2020	2025	2030	2035
Portable Water Supply and Demands					
Water Demands	Potable Demands	58,900	61,300	63,700	63,700
	Net Project Demand Increase	0	53	53	53
	Total CVWD Projected Potable Water Demands	**58,900**	**61,353**	**63,753**	**63,753**
Water Supplies	Chino Basin				
	1. Chino Basin	12,755	13,687	13,859	19,282
	2. Cucamonga Basin	10,000	10,000	10,000	10,000
	Surface Water				
	1. Cucamonga Canyon	1,000	1,000	1,000	1,000
	2. Deer Canyon	140	140	140	140
	3. Day/East Canyon	3,400	3,400	3,400	3,400
	Imported Water from MWD (Tier 1)	28,369	28,369	28,369	28,369
	Imported Water from MWD (Tier 2)	3,289	4,757	6,932	1,509
	Non-Portable Water for Groundwater Recharge	1,600	1,800	2,000	2,000
	Total Potable Supplies	60,553	63,153	65,700	65,700
Potable Water Supply Surplus (CVWD)		0	-53	-53	-53
Potable Water Supply Surplus (with MWD Tier II)		1,553	1,747	1,947	1,947

Table 4. Comparison of CVWD's 2020 Water Supply and Demand in Normal, Single Dry and Multiple Years (AFY)

Supply & Demand	Normal Year	Single Dry Year	Multiple Dry Years		
			Dry Year 1	Dry Year 2	Dry Year 3
Supply Total	60,500	60,500	60,500	60,500	60,500
Demand Total	58,900	58,900	58,900	58,900	58,900
Demand Total (including proposed project)	58,953	58,953	58,953	58,953	58,953
Difference – Surplus	1,600	1,653	1,600	1,600	1,600
Difference – Surplus (including proposed project)*	1,547	1,547	1,547	1,547	1,547

*MWD Tier II Supply

Table 5. Comparison of CVWD's 2025 Water Supply and Demand in Normal, Single Dry and Multiple Years (AFY)

Supply & Demand	Normal Year	Single Dry Year	Multiple Dry Years		
			Dry Year 1	Dry Year 2	Dry Year 3
Supply Total	63,100	63,100	63,100	63,100	63,100
Demand Total	61,300	61,300	61,300	61,300	61,300
Demand Total (including proposed project)	61,353	61,353	61,353	61,353	61,353
Difference – Surplus	1,800	1,800	1,800	1,800	1,800
Difference – Surplus (including proposed project)*	1,747	1,747	1,747	1,747	1,747

*MWD Tier II Supply

Table 6. Comparison of CVWD's 2030 Water Supply and Demand in Normal, Single Dry and Multiple Years (AFY)

Supply & Demand	Normal Year	Single Dry Year	Multiple Dry Years		
			Dry Year 1	Dry Year 2	Dry Year 3
Supply Total	65,700	65,700	65,700	65,700	65,700
Demand Total	63,700	63,700	63,700	63,700	63,700
Demand Total (including proposed project)	63,753	63,753	63,753	63,753	63,753
Difference – Surplus	2,000	2,000	2,000	2,000	2,000
Difference – Surplus (including proposed project)*	1,947	1,947	1,947	1,947	1,947

*MWD Tier II Supply

Table 7. Comparison of CVWD's 2035 Water Supply and Demand in Normal, Single Dry and Multiple Years (AFY)

Supply & Demand	Normal Year	Single Dry Year	Multiple Dry Years		
			Dry Year 1	Dry Year 2	Dry Year 3
Supply Total	65,700	65,700	65,700	65,700	65,700
Demand Total	63,700	63,700	63,700	63,700	63,700
Demand Total (including proposed project)	63,753	63,753	63,753	63,753	63,753
Difference – Surplus	2,000	2,000	2,000	2,000	2,000
Difference – Surplus (including proposed project)*	1,947	1,947	1,947	1,947	1,947

*MWD Tier II Supply

3.0 - Water Supply Sources

CVWD has many sources of water to supply its customer ranging from groundwater to imported water purchase from Metropolitan Water District (MWD). The 2015 UWMP provides transparent information regarding the sources.

CVWD has 12 active well sites in the Chino Basin which has the capability of producing 27,017 GPM or 32,686 AFY. The Cucamonga Basin has 9 active wells with a total 21 wells. The others are not used due to high nitrate concentration found in the effluent. According to the 2015 UWMP, 12,566 AFY may be pumped from these wells within Cucamonga Basin. Per 2015 UWMP, Groundwater source accounts for approximately 63.7% of supplied water.

The other water source CVWD depends on is canyon water, also known as "tunnel sources," that includes Cucamonga Canyon, Day/East Canyon, and Deer Canyon. Per 2015 UWMP, Canyon water accounts for approximately 2.5% of supplied water. This source of water is dependent on the amount of rainfall the area receives. Cucamonga Canyon, in a normal year is estimated to supply 1,000 AFY and a dry year it can supply half that amount at 500 AFY. Day/East Canyon in a normal year is estimated to supply 3,400 AFY and a dry year it can supply half that amount at 1,700 AFY. The Deer Canyon in a normal year is estimated to supply 140 AFY and a dry year it can supply half that amount at 70 APY. The total estimated amount that canyon can supply in a normal year is 4,540 AFY and in a dry year is 2,270 AFY.

The third source of water is imported water purchased directly from MWD. Per the 2015 UWMP, imported source accounts for approximately 30.9% of supplied water. MWD has setup tiered allocation for purchases to its member agencies and Tier I maximum allocation is set at 28,369 AFY. Any amount above 28,369 APY will be consider as Tier II.

The fourth sources of water are the recharge of recycled water in the Chino Basin by IEUA. Per 2015 UWMP, recycled water recharge accounts for approximately 2.9% of supplied water. The recycled water recharge has steadily increased over the years.

3.1 - Chino Basin

The Chino Basin, in San Bernardino County, is the largest groundwater basin in the Upper Santa Ana River Watershed. The Chino Basin is bounded by the Rialto-Colton, Chino, San Jose, and Cucamonga faults, and by the Puente Hills and the San Gabriel Mountains. The total surface area of the basin is approximately 154,000 acres (240 square miles). CVWD's service area within the Chino Basin is shown in Figure 1.

The Chino Basin currently has over five million AF of water in storage, with an additional unused storage capacity, based on historical water levels in the basin, of about one million AF. Over the ten-year period from fiscal year 2002-03 through 2011-124, total groundwater production from the basin has ranged from approximately 113,700 AFY to 181,700 AFY. A majority of production is pumped for municipal and industrial purposes and the remaining production is pumped by agricultural producers.

The Chino Basin was adjudicated under the Chino Basin Judgment, entered on January 27, 1978 by the Superior Court for the County of San Bernardino (included as Appendix A). CVWD is a party to the

Chino Basin Judgment and is classified as an appropriator. The Chino Basin Judgment established an average Safe Yield in the Chino Basin of 140,000 AFY (the Chino Basin Watermaster is currently in the process of recalculating the Safe Yield, however, it is assumed that if the Safe Yield is reduced the difference to CVWD will be made up with unproduced agricultural rights). The Safe Yield is defined in the Chino Basin Judgment as "the long-term average annual quantity of ground water (excluding replenishment of stored water but including return flow to the Basin from use of replenishment or stored water) which can be produced from the Chino Basin under conditions of a particular year without causing an undesirable result." The 1978 Chino Basin Judgment's allocation of the Safe Yield of the Chino Basin includes three separate Pools: the "Overlying Agricultural Pool", the "Overlying Non-Agricultural Pool", and the "Appropriative Pool". CVWD's appropriative rights together with those of Etiwanda Water Company (acquired by CVWD in 1986) and Fontana Union (of which CVWD is a principal shareholder) amount to an 18.258 percent share of the Operating Safe Yield, or 10,011.190 AFY.

Appropriators who are parties to the Chino Basin Judgment, such as CVWD, are authorized to produce groundwater in excess of their rights. Appropriators pay assessments for such production to the Chino Basin Watermaster. The assessments are used to replenish the basin through imported surface water recharge. The Chino Basin Watermaster purchases water to replenish the Chino Basin from MWD through IEUA. Additional supplemental sources of replenishment water come from recycled water and from increased recharge of local storm water. Reliability of water purchased from IEUA to replenish the Chino Basin is discussed in Section 3.4. In addition, the Chino Basin Watermaster reallocates the unused portion of the Chino Basin Safe Yield from the Overlying Agricultural Pool to the Appropriative Pool members as a supplement to the Appropriative Pool share of Operating Safe Yield rights in any year. These transfers are permanent if agricultural land has been converted to non-agricultural use, or temporary if agricultural pool extractions are less than their share of the safe yield. Watermaster historically reallocates a portion of the Agricultural Pool, which was not used during the previous year, which is known as an "Early Agricultural Transfer." CVWD typically receives about 5,989 AFY of the Early Agricultural Transfer. Permanent transfers from the Agricultural Pool are known as "Land Use Conversions." CVWD currently has about 598 AFY of permanent "Land Use Conversion" rights. As agricultural production declines within the Chino Basin, Early Agricultural Transfer and Land Use Conversion rights will increase.

The Chino Basin is managed under the Peace Agreement of the Optimum Basin Management Plan, which was reached in 2000 and establishes goals for operation of the Basin. The Peace Agreement was amended in 2007 through the Peace II Settlement, and now requires the Chino Basin Watermaster to recharge 6,500 AFY of supplemental water, regardless of existing replenishment obligations. The terms of the Peace II Settlement currently run through June 30, 2030. The Chino Basin Watermaster allocates a portion of the recharged water to Producers based on their share of the Operating Safe Yield. CVWD's share of the water recharged under the Peace II Settlement is 602.514 AFY, which is assumed to be available to June 30, 2030. In addition, the Peace II Settlement provides for water to be utilized for Chino Desalter Authority (CDA) replenishment. The CDA has two desalters and several wells in the Chino Basin which produce about 29,000 AFY and require replenishment to the Chino Basin. The CDA is not a party to the Chino Basin Judgement, therefore, through provisions of the Peace II Settlement, Chino Basin Producers must collectively meet the replenishment obligation for the CDA. According to the 2013 Master Plan, CVWD's replenishment obligation ranges from 3,000 AFY to 5,500 AFY through 2030. CVWD may be assessed monetarily by the Chino Basin Watermaster or may transfer water from its Chino Basin storage account to meet the replenishment obligation.

In 2003, IEUA, Three Valleys Municipal Water District, Chino Basin Watermaster, and MWD developed a Dry-Year Yield Program to plan for dry year conditions. As a part of the Dry-Year Yield Program, MWD provided funds to Producers within the Chino Basin, including CVWD, to construct additional groundwater supply wells. In exchange, the participating Producers agreed to shift their water supply from imported water supplied by MWD to Chino Basin groundwater production when requested by MWD. According to the CVWD 2015 UWMP, CVWD constructed five groundwater supply wells in the Chino Basin under the Dry-Year Yield Program with a combined capacity of 15,720 AFY. MWD stored 100,000 AF in the Chino Basin to be utilized by the participating Producers when called upon by MWD. According to the Chino Basin Watermaster 33rd Annual Report, MWD had called upon all 100,000 AF stored in the Chino Basin under the Dry Year Yield Program as of April 30, 2011. Consequently, it is assumed there will be no water in the Dry Year Yield Program when estimating future water supplies from the Chino Basin. In addition, groundwater production through the Dry Year Yield Program is categorized as imported water according to the CVWD 2010 UWMP, therefore historical groundwater supplies from the Chino Basin are not projected to be impacted.

CVWD's total production rights include its Operating Safe Yield allocation (approximately 10,012 AFY), unproduced agricultural pool water rights allocation [Early Agricultural Transfer (5,989 AFY) and Land Use Conversions (598 AFY)], new yield allocation (storm water recharge, assumed to be 0 AFY), Peace II Settlement allocation (602.514 AFY through 2030), recycled water recharge allocation (4,200 AFY), and any purchases from other producers made during the year (assumed to be 0 AFY). CVWD's projected rights from the Chino Basin through 2030 total approximately 21,400 AFY (10,012 AFY + 5,989 AFY + 598 AFY + 603 AFY + 4,200 AFY). CVWD's projected rights from the Chino Basin after 2030 total approximately 20,800 AFY (10,012 AFY + 5,989 AFY + 598 AFY + 4,200 AFY). CVWD staff have indicated they intend to increase groundwater storage within the Chino Basin to be utilized during future single and multiple dry years. Consequently, CVWD staff have provided conservative Chino Basin supply estimates (Chino Basin rights which exceed conservative projected supplies will be utilized to maintain storage within the Chino Basin) of 18,036 AFY, 10,926 AFY, 11,862 AFY, 12,033 AFY, and 17,456 AFY for calendar years 2015, 2020, 2025, 2030, and 2035, respectively. These projected Chino Basin supplies will be used for the purposes of this WSA. As previously indicated, CVWD maintains a groundwater storage account within the Chino Basin pursuant to the Chino Basin Judgment. CVWD currently has approximately 62,000 AF of water in its storage account. CVWD plans to add approximately 34,000 AF of additional water (in addition to 2 percent storage losses and annual withdrawals to meet CDA replenishment obligations) into its storage account over the next 20 years for use during single and multiple dry years, if needed.

3.1.1 - Chino Basin Reliability

As previously discussed, CVWD's average annual production from the Chino Basin from 1997 to 2014 was approximately 13,423 AFY and the capacity of CVWD's active production wells in the Chino Basin total approximately 30,400 AFY. During the most recent five years, CVWD's annual production ranged from approximately 13,626 AFY to 19,831 AFY. The Chino Basin Judgment authorizes CVWD to produce all the water it requires from the Chino Basin for beneficial use by CVWD's customers, subject to replenishment requirements, and more than ample water is present in the Chino Basin to allow CVWD to do so. CVWD will construct additional wells and associated infrastructure in the Chino Basin to match additional water supply with additional water demands from growth in the number of customers. CVWD active wells located in the Chino Basin have not been impacted by water quality issues, however CVWD

has the necessary technical and financial resources available to allow CVWD to quickly respond to assure continuity and reliability of water service if any such water quality incidents occur.

Table 8. CVWD's Groundwater Production (AFY)

Calendar Year	Chino Basin	Cucamonga Basin	Total Demand
1995	NA	NA	20463
1996	NA	NA	22351
1997	7764	13492	21256
1998	5101	9764	14865
1999	7737	13661	21398
2000	6195	10642	16837
2001	6899	6604	13503
2002	10580	6719	17299
2003	10020	5051	15071
2004	12582	6714	19296
2005	13328	7518	20846
2006	16814	6497	23311
2007	16782	5019	21801
2008	19232	4450	23682
2009	22271	7630	29901
2010	19831	3848	23979
2011	19380	3645	23025
2012	15041	6028	21069
2013	18437	6523	24960
2014	13626	10724	24350
AVERAGE	13423	7474	20949

Source: CVWD

3.2 – Cucamonga Basin

The Cucamonga Basin is CVWD's second groundwater source. CVWD's historical production from the Cucamonga Basin averaged approximately 7,474 AFY, as shown in Table 3, which in most years accounts for about 15 percent of CVWD's total water supply.

The Cucamonga Basin is bounded by the San Gabriel Mountains and the Cucamonga fault to the north and by the Red Hill fault to the west, south and east. (See Figure 1). The 1958 Cucamonga Basin Judgement adjudicated groundwater rights within the Cucamonga Basin to 24 stipulating parties, which today consist of CVWD, San Antonio Water Company (SAWC), and West End Consolidated Water Company (WEC).

Pursuant to the Cucamonga Basin Judgment (included as Appendix B), CVWD has a right to produce 15,471 AFY (68.1 percent of total rights) from the Cucamonga Basin. In addition, CVWD has 3,620 AFY of diversion rights to Cucamonga Creek. CVWD's total production rights to the Cucamonga Basin are

19,071 AFY. There are currently discussions underway regarding revisions to the management of the Cucamonga Basin to update the Judgment and establish an Operating Safe Yield. According to the 2013 Master Plan, the proposed Operating Safe Yield may likely range from 14,000 AFY to 16,000 AFY, resulting in a total production right of approximately 10,500 AFY for CVWD (based on a 68.1 percent share of the proposed Operating Safe Yield). For the purposes of this WSA, a projected supply of 10,000 AFY from the Cucamonga Basin has been used for CVWD based on CVWD staff projections.

3.1.1 – Cucamonga Basin Reliability

CVWD's average annual production from the Cucamonga Basin from 1997 to 2014 was approximately 7,474 AFY. As discussed previously, the capacity of CVWD's active production wells in the Cucamonga Basin totals approximately 11,548 AFY. During the most recent five years, CVWD's annual production ranged from approximately 3,645 AFY to 10,724 AFY. Although CVWD has rights to produce additional groundwater from the Cucamonga Basin, CVWD has reduced its annual groundwater production in anticipation of a reduced Operating Safe Yield. Overall basin production currently is less than the estimated sustainable safe yield. Therefore, under current conditions, the Cucamonga Basin may be assumed to be a reliable source of supply.

3.3 – Tunnel Water

Tunnel water sources provide about 10 percent of CVWD's water supply. During the last 20 years, CVWD's total production from tunnel water sources averaged approximately 4,878 AFY, as shown in Table 4.

CVWD has several tunnel water sources which originate in the canyons of the San Gabriel Mountains. These tunnel water sources come from streams, springs and tunnels in the Cucamonga Canyon, Deer Canyon and Day/East Canyon of the San Gabriel Mountains. (CVWD also has water rights to three (3) additional tunnel water sources including Smith Canyon, Lytle Creek, and Golf Course Tunnel. These tunnel water sources are not currently utilized by CVWD due to age and distance of the facilities from CVWD's service area and will conservatively not be included in this WSA as projected water supply sources.)

Cucamonga Canyon

CVWD acquired the Ioamosa Water Company in the 1970s along with the Ioamosa Tunnel. CVWD's Cucamonga Canyon facilities are located in an unincorporated area of western San Bernardino County, north of the City of Rancho Cucamonga and include two diversion ponds and a 24-inch diameter 3,300 foot transmission pipeline which conveys the surface water from the Cucamonga Canyon to the Arthur H. Bridge Water Treatment Plant (ABWTP). CVWD has rights to 250 miner's inches of runoff in Cucamonga Creek, or approximately 3.24 million gallons per day (mgd). CVWD's Cucamonga Canyon transmission pipeline was destroyed after the Station Fire by subsequent flooding and water was not diverted between December 2003 and February 2007.

Water supplies from tunnel sources are dependent on precipitation, therefore, according to the 2013 Master Plan, tunnel supplies were projected based on above average hydrologic conditions and below average hydrologic conditions. The Cucamonga Canyon water supply was assumed to be 1,000 AFY during years

with above average hydrologic conditions and 500 AFY during years with below average hydrologic conditions.

Day/East Canyon

CVWD acquired the Etiwanda Water Company in 1979 along with the surface water rights to the Day and East Canyons (2013 Master Plan). Day Canyon is located northwest of Etiwanda Avenue and East Canyon is located northeast of Etiwanda Avenue. CVWD's Day/East Canyon facilities include the Day Basin, East Basin, Smith Tunnel, "Bee" Tunnel, and transmission pipelines which convey surface water from the Day/East Canyons to either the Royer-Nesbit Water Treatment Plant (Royer-Nesbit WTP) or the Lloyd Michael Water Treatment Plant (Lloyd Michael WTP). CVWD's rights to the Day/East Canyon are appropriative and include all subsurface and surface flows through the canyon.

According to the 2013 Master Plan, the Day/East Canyon water supply was assumed to be 3,400 AFY during years with above average hydrologic conditions and 1,700 AFY during years with below average hydrologic conditions.

Deer Canyon

CVWD acquired the Hermosa Water Company in 1970 along with the water rights to Deer Canyon. In 2002, CVWD sold a portion of its water rights and facilities in Deer Canyon to the Nestle Company. CVWD's Deer Canyon facilities are located north of Haven Avenue and currently include the Hermosa Tunnel and a 6-inch diameter 1,300 foot long transmission pipeline which conveys surface water from the Hermosa Tunnel to a reservoir for distribution. Water produced from the Hermosa Tunnel is considered to be groundwater and does not require treatment. CVWD's rights to Deer Canyon are appropriative and include all subsurface and surface flows through the canyon.

According to the 2013 Master Plan, the Deer Canyon water supply was assumed to be 140 AFY during years with above average hydrologic conditions and 70 AFY during years with below average hydrologic conditions.

Total Projected Tunnel Water Supplies

Projected tunnel water supplies total 4,540 AFY (1,000 AFY + 3,400 AFY + 140 AFY) for years with above average hydrologic conditions and 2,270 AFY (500 AFY + 1,700 AFY + 70 AFY) for years with below average hydrologic conditions.

3.3.1 – Reliability of Tunnel Water Sources

As previously discussed, CVWD's average annual production from tunnel water sources from 1995 to 2014 was approximately 4,878 AFY. During the most recent five years, CVWD's annual production ranged from approximately 1,825 AFY to 5,919 AFY (production of 1,825 AF was recorded during 2004 at which point the Cucamonga Canyon tunnel was out of service). For the purposes of this WSA, approximately 4,540 AFY of tunnel water (from Cucamonga Canyon, Deer Canyon, and Day/East Canyon) is assumed to be available during a normal year and approximately 2,270 AFY of tunnel water is assumed to be available during a dry year.

Table 9. CVWD's Production from Tunnel Sources (AFY)

Year	Total Demand
1995	7563
1996	7080
1997	6685
1998	9580
1999	6157
2000	4420
2001	5655
2002	2475
2003	3499
2004	1892
2005	6978
2006	5347
2007	3194
2008	5263
2009	4821
2010	3954
2011	5919
2012	2838
2013	1825
2014	2422
AVERAGE	4878

Source: CVWD

3.4 – Inland Empire Utilities Agency

IEUA, originally known as Chino Basin Municipal Water District, was formed by popular vote of its residents in June 1950, to become a member agency of MWD for the purpose of importing supplemental water to augment local stream and groundwater supplies.
Since its formation in 1950, IEUA has significantly expanded its services. These expanded services include production of recycled water, wholesaling of untreated imported water and recycled water supplies, sewage treatment, co-composting of manure and municipal biosolids, desalinization of groundwater supplies and disposal of non-reclaimable industrial wastewater and brine. IEUA does not provide treated MWD water to retail water purveyors in its service area.

CVWD is located within IEUA's service area and treats imported water delivered on behalf of IEUA by MWD at two water treatment plants, (the Lloyd Michael WTP and Royer-Nesbit WTP). IEUA's water management goals and implementation strategies, such as its imported water distribution policy, groundwater banking, conjunctive use programs, and use of recycled water, enhances the reliability of water supplies utilized by CVWD. The following discussion of water sources, future water demands, and future water supplies in IEUA's service area illustrates sufficient water is available for CVWD and the other purveyors within IEUA's service area in the future.

IEUA wholesales untreated water and provides industrial/municipal wastewater collection and treatment services, and other related services for the western portion of San Bernardino County. IEUA's service area is located in southwestern San Bernardino County. Its 242 square mile service area, which encompasses the Chino Groundwater Basin, consists of a relatively flat alluvial valley from east to west which slopes downward from north to south at a one to two percent grade.

Water used in IEUA's service area comes from both local and imported sources. Local sources include local groundwater, surface water and, most recently, recycled water. IEUA purchases untreated imported water from MWD for wholesale redistribution to local retail water purveyors within its service area, including CVWD. The local retail water purveyors must first treat the imported MWD water before delivery to their potable water customers.

According to IEUA's 2010 UWMP, total local groundwater production by CVWD and other local retail water agencies in IEUA's service area ranged from approximately 110,000 AFY to 146,000 AFY from 2000 to 2010.

CVWD and a number of other retail water agencies in IEUA's service area which produce groundwater from the Chino Basin also obtain a portion of their water from local surface sources. The principal sources of surface water include Lytle Creek, San Antonio Canyon, Cucamonga Canyon, Day Creek, Deer Creek, and several smaller surface streams. According to IEUA's 2010 UWMP, production from all such local surface supplies ranged from approximately 8,900 AFY to 25,700 AFY from 2000 to 2010.

CVWD has the capacity to receive up to 71 mgd of MWD imported SWP water from IEUA for treatment at CVWD's existing Royer-Nesbit WTP (11 mgd capacity) and Lloyd Michael WTP (60 mgd capacity). Historical MWD deliveries to IEUA's service area are shown in Table 5. Additional imported water supplies from IEUA are used for groundwater replenishment thereby augmenting the annual yield and production from the Chino Basin.

IEUA also provides recycled water to its member agencies for direct non-potable use (irrigation) and indirect non-potable use (groundwater recharge). Water recycling involves treatment of wastewater to create a high quality, safe source of water for landscape irrigation, industrial uses, and groundwater recharge. Recycled water is a critical component of the Optimum Basin Management Plan developed by the Chino Basin Watermaster in 2000 to address water supply and quality issues in the Chino Basin.

Recycled water has become an increasingly important source of renewable local water supply for the region. A map showing CVWD's current recycled water infrastructure is shown in Figure 4. According to CVWD's 2010 UWMP, approximately 2,800 AFY of recycled water supplies for direct use and 4,500 AFY of recycled water supplies for groundwater recharge will be available for CVWD use by 2035. According to CVWD's 2013 Master Plan, CVWD's recycled water demands for direct use are projected to be 2,000 AFY by 2035, resulting in a surplus of recycled water supplies.

The population within IEUA's service area is projected by the local retail water agencies (including CVWD) to collectively increase from approximately 919,800 people in 2015 to over 1,176,100 people by the year 2035 (Table 6). This represents an increase of approximately 327,000 people over a twenty-five year period, an average annual growth rate of approximately 1.3 percent.

Table 10. MWD Historical Water Purchase by IEUA (AFY)

Fiscal Year	Full Service	Agricultural	Interruptible/Local Projects	Storage	Total
1953-54	3135				3135
1954-55	4820.5				4820.5
1955-56	5033.3				5033.3
1956-57	5983.6				5983.6
1957-58	6850.3				6850.3
1958-59	4363.7	41			4404.7
1959-60	3568.1	83			3651.1
1960-61	4906.6	459			367.6
1961-62	6416.4	796			7212.4
1962-63	6865.20	1195			8060.2
1963-64	14598.7	1579			16177.7
1964-65	18993.5	2699			21692.5
1965-66	13422.2	2154			15576.2
1966-67	10071.7	1072			11143.7
1967-68	10883.8	1681			156.80
1968-69	8565.2	134			8699.20
1969-70	7262.5	370			7632.5
1970-71	8583.8	462			9045.8
1971-72	9611.7	660			10271.7
1972-73	8592.6	634			9226.6
1973-74	8427.7	800			9227.7
1974-75	8841.0	933			9774.0
1975-76	9474.0	1842			11316.0
1976-77	11096.0	1698			12794.0
1977-78	20357.0	924			21281.0
1978-79	10361.6	817.3	16088.6		27267.5
1979-80	11196.0	69.4	7841.4	10677.6	29784.4
1980-81	13163.1	335.6	17861.9	3020.6	34381.20
1981-82	7837.4	588.1	25914.6	2453.7	36793.80
1982-83	4792.3	303.4	21797.5		26893.20
1983-84	4727.6	404.2	21230.0		26361.8
1984-85	8201.0	558.6	21001.6		29761.2
1985-86	9150.3	398.4	24701.0	1072.5	35322.2
1986-87	11673.6	368.7	18393.2	3522.6	33958.1
1987-88	9728.8	459	12245.1	13142.2	35575.1
1988-89	20247.2	175.3	25931.5		46354.0
1989-90	15773.0	117.8	26156.5	26616.5	68663.8
1990-91	20015.9	26.2	28071.0	4011.7	52124.8
1991-92	31924.5	152		75976.1	108052.6
1992-93	29407.0	94.4		51553.7	81055.1
1993-94	28897.1			28046.9	56944.0
1994-95	36967.80	8.5		1579.5	38555.8
1995-96	35204.10	77.4		4408.80	39690.3
1996-97	44728.20	118.8		5058.70	49905.7
1997-98	39320.6	83.8		11895.10	51299.5
1998-99	41607.8	68.1	100.3	8414.10	50190.3
1999-00	57070.30	104.1	495.5	5332.1	63002.0
2000-01	57735.60	45.1	4066.0	11742.5	73589.2
2001-02	64996.0	44.0	5664.3	9006.30	79710.9
2002-03	57415.5	52.3	5907.6	13449.9	76825.3
2003-04	64024.7	49.3	9771.0	7582.0	81427.0
2004-05	54841.4	56.4	8931.7	42259.4	106089.0

2005-06	50607.8	90.4	11943.2	36227.80	98869.2
2006-07	52869.1	89.7	13793.8	24759.1	91511.7
2007-08	70780.0	43.2	23729.6		94552.8
2008-09	81615.90	3	2767.0		109305.9
2009-10	65539.60		22181.0		87720.6
2010-11	51134.4		22986.0	9650.6	83771.0
2011-12	51551.80		23969.0	24915.6	100436.4
2012-13	59050.90		32352.0		91402.9
2013-14	67833.10		29456.6		97289.7

Table 11. Projected Population in IEUA's Service Area

Year	2015	2020	2025	2030	2035	2040
Population	919,771	981,651	1,041,521	1,108,234	1,176,066	

As a result of this projected regional population growth, water demand in IEUA's service area is expected to increase by approximately 15 percent over the twenty-year period from 2015 to 2035. Table 7 presents the projected water demands for IEUA's service area. According to IEUA's 2015 UWMP, total annual water use is expected to increase from approximately 271,870 AF in 2015 to approximately 314,136 AF by the year 2035.

Table 12. Projected Water Demands in IEUA's Service Area (AFY)

Year	2015	2020	2025	2030	2035	2040
Municipal and Industrial	228,006	229,803	240,969	251,877	268,233	
Agricultural	15,000	7,000	7,000	7,000	7,000	
Recycled Water (Direct Use)	28,865	31,662	34,359	37,056	40,903	
Total Demand	**271,871**	**268,465**	**282,328**	**293,933**	**314,136**	

Projected water supplies within IEUA's service area include groundwater, surface water, recycled water, and untreated imported water purchased from MWD. Table 8 summarizes the available supplies and water demands under a normal year.

Table 13. IEUA Future Water Demand/Supply Balance in Normal Years (AFY)

	Year	2015	2020	2025	2030	2035	2040
Water Supply	Groundwater	180,075	174,217	182,581	188,480	200,842	
	Surface Water	28,490	28,490	28,490	28,490	28,490	
	Recycled Water	66,241	70,391	74,402	78,884	83,436	
	Imported Water	80,556	81,641	82,725	83,809	85,978	
	Total Supply	335,365	354,739	368,198	379,663	398,746	
	Total Demand	271,871	268,465	282,328	293,933	314,136	
	Surplus	83,494	86,274	85,870	85,730	84,610	

According to IEUA's 2010 UWMP, total production from the Chino Basin and adjacent groundwater basins is projected to increase from approximately 180,000 AFY in 2015 to approximately 201,000 AFY in 2035 for normal years.

According to IEUA's 2010 UWMP, IEUA conservatively projected total production from surface water supplies within its service area at approximately 28,500 AFY through the year 2035 for normal years. Surface water flows are substantially greater in wet years and less during dry years.

According to IEUA's 2010 UWMP, the direct use of recycled water within IEUA's service area in the year 2010 was approximately 17,300 AF. Recycled water use during normal years is expected to increase to approximately 83,400 AFY by 2035.

The demand for untreated imported Colorado River and SWP water for the Chino Basin in normal years is projected to increase from approximately 80,600 AFY, in 2015, to approximately 86,000 AFY by the year 2035.

CVWD supports and works closely with IEUA to implement a mix of water management strategies to meet the region's long-term needs. IEUA's water management goals are the following:

- Implement an effective conservation program which will maximize efficient water use and reuse in IEUA's service area;
- Continue development of a groundwater recovery program;
- Increase the safe storage capacity of the Chino Basin to 150,000 AFY and implement a conjunctive use/groundwater management program which provides dry year water supplies for the service area (the increased safe storage capacity potential is 500,000 AFY). In 2008, IEUA completed a CEQA document for the proposed expansion of the program;
- Achieve maximum use of all available storm water;
- Achieve maximum reuse of all available recycled water; and
- Minimize dependence on imported water supplies.

The water demands and supplies for IEUA's service area were analyzed by IEUA to assess the region's ability to meet demands given a repeat of California's severe drought from 2007 to 2009. Table 9 and Table 10 present the supply-demand balance for single and multiple year drought scenarios for calendar years 2015 and 2035. With the implementation of the local programs outlined above, the region is expected to meet 100 percent of it's dry year demand.

Table 14. IEUA's 2015 Water Supply and Demand in Normal, Single Dry, and Multiple Dry Years

Demand and Supply		Normal Year	Single Dry Year	Multiple Dry Years		
				Dry Year 1	Dry Year 2	Dry Year 3
Water Supplies	Ground Water	180,078	207,090	192,913	199,170	205,289
	Imported Water	80,556	49,945	42,184	46,013	49,945
	Surface Water	28,490	8,832	13,404	23,455	21,937
	Recycled Water	66,241	66,241	49,549	60,788	72,865
	Total Supply	355,365	332,108	298,049	329,426	350,036
Total Demand		271,871	271,871	260,588	266,230	271,871
Total Demand w/Conservation		271,871	244,684	234,529	239,607	244,684
Surplus		83,494	87,423	63,519	89,820	105,352

Table 14. IEUA's 2035 Water Supply and Demand in Normal, Single Dry, and Multiple Dry Years

Demand and Supply		Normal Year	Single Dry Year	Multiple Dry Years		
				Dry Year 1	Dry Year 2	Dry Year 3
Water Supplies	Ground Water	200,842	230,968	227,241	228,125	228,960
	Imported Water	85,978	53,306	51,066	52,182	53,306
	Surface Water	28,490	8,832	13,960	23,932	21,937
	Recycled Water	83,436	83,436	83,436	81,615	86,652
	Total Supply	398,746	398,746	376,542	373,882	395,982
Total Demand		314,136	314,136	306,055	310,095	314,136
Total Demand w/Conservation		314,136	282,722	275,449	279,086	282,722
Surplus		84,610	83,820	98,433	111,805	113,261

3.4.1 – SWP Water Reliability

MWD contracts with the State of California, through the SWP, for the delivery of northern California water through the California Aqueduct. The SWP is a water storage and delivery system maintained and operated by the California Department of Water Resources (DWR). The SWP is a statewide water conveyance system which diverts and stores water in Northern and Central California and conveys water (including through the Sacramento-San Joaquin Delta region) to 29 water agencies throughout the State. The SWP has delivered water since the 1960's through a network of aqueducts, pumping stations and powerplants.

The San Francisco Bay -Sacramento River Delta area (Bay-Delta) is a part of the SWP water delivery system. The reliability of the Bay-Delta to deliver water may be impacted by potential risks associated with endangered species, earthquakes, levee failure, and climate change. In order to mitigate these potential risks, State and federal resources and environmental protection agencies and a broad range of stakeholders are involved in a multiyear planning process referred to as the CALFED process to develop programs to greatly improve the capacity and reliability of the SWP and the environmental conditions of the Bay-Delta. The Bay-Delta cooperating agencies approved a Record of Decision in August 2000 for a Programmatic Environmental Impact Report/Impact Statement for a multi-year improvement program. The improvement program includes projects related to DWR's SWP conveyance capacity, water quality,

and operation of the SWP. Those programs are undergoing thorough federal and state environmental review.

The Bay Delta Conservation Plan (BDCP) grew out of the CALFED Bay-Delta Plan's Ecosystem Restoration Program Conservation Strategy. A draft BDCP was prepared through a collaboration of state, federal, and local water agencies, state and federal fish agencies, and a broad range of stakeholders. The BDCP identifies conservation strategies, water flow, and habitat restoration actions in California's Sacramento-San Joaquin Delta. The goal of the BDCP is to provide for both species/habitat protection and improved reliability of water supplies. The Public Draft BDCP and Public Draft Environmental Impact Report / Environmental Impact Statement (EIR/EIS) were released for formal public review and comment on December 13, 2013 through July 29, 2014. Comments to the EIR/EIS are currently being reviewed by DWR. On August 27, 2014, DWR and the other state and federal agencies leading the BDCP indicated a partially Recirculated Draft BDCP, EIR/EIS, and Implementing Agreement (IA) will be published in 2015. The agencies are currently reviewing the comments received through the public comment period. On April 30, 2015, State and Federal agencies proposed a new sub-alternative (Alternative 4A) which would replace Alternative 4 (the proposed BDCP) as the State's proposed project. Alternative 4A reflects the state's proposal to separate conveyance facility and habitat restoration measures. These efforts are a direct reflection of public comments. Alternative 4A will be evaluated in the Recirculated Draft BDCP, EIR/EIS that will be available for public review and comment in coming months. The public will also have opportunities to review the final documents prior to their adoption. The BDCP is intended to meet the standards of the Sacramento-San Joaquin Delta Reform Act of 2009, described below.

In November 2009, following more than three (3) years of BDCP planning, the State of California enacted comprehensive legislation, including the Sacramento-San Joaquin Delta Reform Act of 2009 (California Water Code Division 35) which provided for an independent state agency, the Delta Stewardship Council. Pursuant to that act, the Delta Stewardship Council developed a comprehensive management plan which provides more reliable water supply for California and protects and enhances the Delta ecosystem (through development and implementation of a Delta Plan). The Delta Stewardship Council adopted a final Delta Plan in May 2013 which is the comprehensive long-term management plan for the Delta to improve statewide water supply reliability and to protect the Delta. The Delta Stewardship Council also adopted a Programmatic Environmental Impact Report (PEIR) on the Delta Plan in May 2013. The PEIR evaluates the potential impact of the Delta Plan and identifies mitigation measures.

In June 2013, a lawsuit was filed by the State Water Contractors and others seeking to overturn the Delta Stewardship Council's adoption of the Delta Plan, promulgation of related regulations, and certification of the above referenced PEIR. The litigation brought by State Water Contractors and others claims the Delta Stewardship Council exceeded its authority under the Sacramento-San Joaquin Delta Reform Act of 2009 and failed to analyze impacts under the California Environmental Quality Act, particularly foreseeable impacts of the Delta Plan on water supplies around the state.

DWR's "State Water Project Draft Delivery Reliability Report 2015" (2015 Draft Report), dated April 2015, indicates the delivery reliability of SWP water is approximately 62 percent, on average, over the next 20 years. It should be noted the SWP allocation during calendar year 2014 was 5 percent, which is 6 percent lower than the estimated single dry year allocation of 11 percent as presented in the 2015 Draft Report. However, the 2015 SWP allocation is currently 20 percent. DWR's Reliability Report incorporates future impacts on water deliveries as a result of the future effects of climate change, anticipated changes

in Sacramento River basin land uses and potential limited pumping of the SWP to protect salmon, smelt, and other species in the Sacramento-San Joaquin Delta and Central Valley areas. This includes operational restrictions placed on the SWP from biological opinions issued by the U.S. Fish and Wildlife Service (USFWS) in December 2008 and the National Marine Fisheries Service (NMFS) in June 2009 governing the SWP and Central Valley Project (a Federal water storage and conveyance facility) operations. Subsequently, a U.S. District Court Judge remanded the biological opinions to the USFWS and NMFS for further review and analysis. The long term impact of these issues cannot be fully quantified at this time. DWR plans to develop additional water supply facilities in order for the SWP to deliver contracted water beyond historical delivery quantities.

3.4.1 – Metropolitan Water District of Southern California

MWD provides imported water supplies to the Chino Basin for both replacement/recharge purposes and direct delivery. As previously discussed, imported water from MWD is provided through IEUA, which is entitled to deliver and sell water from MWD. Untreated imported water can be spread and stored in the Chino Basin for replacement/recharge and can be delivered directly to retail water utilities within IEUA's service area with available connections.

MWD's 2010 Regional UWMP provides information regarding MWD's water supply reliability and the ability to meet all projected water demands. MWD has indicated in its report with the addition of all water supplies existing and planned, MWD would have the ability to meet all of its member agencies' projected supplemental demand for the next twenty years, even during a repeat of the worst drought scenario.

MWD's 2010 UWMP considers DWR's "State Water Project Delivery Reliability Report 2009" (2009 Report), dated August 2010, which contains similar deliveries during future conditions as the 2015 Draft Report. MWD's 2010 UWMP concludes MWD will have sufficient water available for anticipated water demands in its service area, including IEUA's service area through the year 2035. In addition, since the delivery of replacement water can be shifted from dry years to wet years of water surplus, the available information shows adequate replacement water will be available through the year 2035.

Because of critically dry conditions in 2007 affecting MWD's main water supply sources and Federal Court rulings protecting the Delta Smelt and other aquatic species in the Sacramento-San Joaquin River Delta, SWP water deliveries were reduced. As a result, MWD adopted a Water Supply Allocation Plan (WSAP), in February 2008 to allocate available water supplies to its member agencies. The WSAP established ten different shortage levels and a corresponding Allocation to each member agency. Although member agency water use is not restricted to the Allocation, additional charges would be assessed on water used above the total annual Allocation. The WSAP provides a reduced Allocation to a member agency for its Municipal and Industrial (M&I) retail demand. The WSAP considers historical local water production, full service treated water deliveries, agricultural deliveries and water conservation efforts when calculating each member agency's Allocation.

In general, the WSAP process calculates total historical member agency demand. The historical demand is then compared to member agency projected local supply for a specific Allocation year. The balance required from MWD, less an Allocation reduction factor, is the member agency's "Water Supply Allocation". When an MWD Member Agency (such as IEUA) reduces its local demand through conservation or other means, the Allocation increases. The increased Allocation can be used for Full Service replenishment deliveries when an Allocation is in place.

On April 1, 2015, in response to historically dry conditions, California Governor Jerry Brown signed Executive Order B-29-15 (Governor's Executive Order) which requires a 25 percent reduction of urban potable water use throughout the State of California through February 28, 2016. In response to the EO, on April 14, 2015, MWD implemented the WSAP at Level 3 effective July 1, 2015 through June 20, 2016. CVWD's Tier 1 allocation for fiscal year 2015-16 is 27,000 AF, however imported water may be purchased above the Tier 1 allocation (at the Tier 2 rate), albeit at a higher rate to encourage water conservation.

Tables 11, 12, and 13 show MWD's projected total water supplies and demands through year 2035 for average, single dry, and multiple dry years, respectively. MWD has sufficient water supplies to meet all of its member agencies projected supplemental demand for the next twenty years, even during multiple dry years. MWD's greatest water demands, which occur during a multiple dry year, will increase at a rate of approximately 0.2 percent per year from approximately 2,236,000 AFY, in 2015, to 2,399,000 AFY, in 2035.

3.4.2 – Recycled Water Reliability

As previously discussed, IEUA provides recycled water to its member agencies for direct non-potable use (irrigation) and indirect potable use (groundwater recharge). Water recycling involves treatment of wastewater to create a high quality, safe source of water for landscape irrigation, industrial uses, and groundwater recharge. Recycled water has become an increasingly important source of reliable local water supply for the region, including CVWD which began utilizing recycled water to meet irrigation demands in 2008.

According to IEUA's 2013-14 Recycled Water Annual Report, CVWD's recycled water demands for fiscal year 2013-14 were approximately 1,200 acre-feet, of which 502 acre-feet (577 acre-feet during calendar year 2014) were used at the Empire Lakes Golf Course for irrigation. A map showing CVWD's current recycled water infrastructure is shown in Figure 4. According to CVWD's 2010 UWMP, up to approximately 2,800 AFY of recycled water supplies are projected to be available for direct use by 2035. According to CVWD's 2013 Master Plan, CVWD's recycled water demands for direct use are projected to be 2,000 AFY by 2035. Therefore, CVWD's recycled water demands for direct use, including projected Project recycled water use of 30 AFY, are projected to be about 1,453 AFY (2,000 AFY – 577 AFY + 30 AFY) by 2035. As previously stated, an additional 4,500 AFY of recycled water supplies are projected for groundwater recharge purposes.

4 – Future Supply

CVWD's sources of water supply include untreated imported water purchased through the IEUA, groundwater rights to the Chino Basin and the Cucamonga Basin, tunnel water, and recycled water through the IEUA.

Tables 14 through 19 show CVWD's projected water demands and sources of water supply, under future average, single dry, and multiple dry year scenarios, from 2015 to 2035. CVWD has historically met all of its water demands with imported water, groundwater production, tunnel water, and recycled water purchased through the IEUA.

CVWD included a Water Shortage Contingency Plan in its 2010 UWMP which identifies actions that can be taken to respond to a catastrophic interruption of water supply. In addition, CVWD adopted in 1990 and revised in June 2009 Ordinance 48 titled "Water Supply Shortage Contingency Plan". According to CVWD's 2010 UWMP, the Plan includes mandatory water use restrictions that conserve water regardless of water supply availability.

CVWD's future water demands can be supplied by imported water, groundwater from the Chino Basin and Cucamonga Basin, tunnel water, and recycled water. Any remaining future water demands can also be supplied from Chino Basin groundwater storage.

CVWD will continue to implement future system improvements, including reservoirs, pipelines, treatment, and booster stations, on an as-needed basis. In order to install these additional potential system improvements, CVWD may need to satisfy the following requirements:

- CEQA requirements
- State Water Resources Control Board Division of Drinking Water requirements
- City/County approval for construction projects

The past four years (2012 through 2015) have comprised the most significant drought event over the past 20 years. From 2012 through 2014, CVWD's average total groundwater production was above supply projections. CVWD's average production from tunnel water supplies was approximately equal to the dry year tunnel water supply projection of 2,270 AFY. In addition, imported water purchased from IEUA by CVWD was, on average, approximately equal to the fiscal year 2015-16 water supply allocation of 27,000 AF. Current drought conditions have proved to be more severe than prior droughts (2007 to 2009) on which planning documents were based (including CVWD's 2010 UWMP, 2013 Water Master Plan, and the SWP 2015 Draft Delivery Reliability Report), however, the total water supplies available during the current drought (2012 through 2014) have been similar to projected drought supplies. Therefore, CVWD is able to meet water demands, even during continuing unprecedented drought conditions.

CVWD has indicated they plan to meet water use reductions within their service area as mandated by the Governor's Executive Order (in effect through February 28, 2016) through implementation of a Drought Response Plan. The Drought Response Plan includes outreach and communication efforts to ensure CVWD customers understand the water use reduction requirements, as well as tools and resources including rebates, water consultations, landscape surveys, and water leak investigations to aid CVWD customers in conservation efforts. According to the Drought Response Plan, achievement of conservation goals (32 percent reduction in overall potable water usage) will be monitored on a monthly basis. In addition, on May 12, 2015, CVWD declared a Stage 6 Severe Water Emergency pursuant to CVWD's Water Supply Shortage Contingency Plan. A Stage 6 Severe Water Emergency enacts a 35 percent mandatory water use reduction and allows CVWD to specify requirements on the days, frequency and duration of outdoor water use by its customers.

Tables 14 through 19 show CVWD's existing water supplies will provide sufficient water supply for CVWD to meet all present and future water supply requirements of the Project under all conditions for the next twenty years and through 2035.

5 – Conclusion

The proposed Industrial Park project on 9th and Vineyard will adequately be provided the supply of water currently available through the District. The additional water demand for the proposed project will be available through purchasing of MWD supply on a Tier II basis.

In addition to the increased supply of Tier II imported water to meet Project's demand, District has projects in place to increase the local groundwater supplies up to the existing rights and other supply management strategies to meet the Project's demands in normal, single-dry, and multiple-dry years.

This WSA does not create a right or any entitlement to water service (Water Code Section 10914). The WSA is not a commitment to serve the project but is a review of the District's total projected water supplies. Based on presently available information, the WSA and its analyses and conclusions are conditioned in part on the ability of MWD and IEUA to continue to supply imported water to meet the District's needs.

LIST OF APPENDICES

APPENDIX A – 2015 UWMP GUIDEBOOK CHECKLIST

Appendix A

2015 UWMP Guidebook Checklist

Checklist Arranged by Subject

CWC Section	UWMP Requirement	Subject	Guidebook Location	UWMP Location *(Optional Column for Agency Use)*
10620(b)	Every person that becomes an urban water supplier shall adopt an urban water management plan within one year after it has become an urban water supplier.	Plan Preparation	Section 2.1	**1.1**
10620(d)(2)	Coordinate the preparation of its plan with other appropriate agencies in the area, including other water suppliers that share a common source, water management agencies, and relevant public agencies, to the extent practicable.	Plan Preparation	Section 2.5.2	**1.4**
10642	Provide supporting documentation that the water supplier has encouraged active involvement of diverse social, cultural, and economic elements of the population within the service area prior to and during the preparation of the plan.	Plan Preparation	Section 2.5.2	**1.4**
10631(a)	Describe the water supplier service area.	System Description	Section 3.1	**2.1**
10631(a)	Describe the climate of the service area of the supplier.	System Description	Section 3.3	**2.2**
10631(a)	Provide population projections for 2020, 2025, 2030, and 2035.	System Description	Section 3.4	**2.3**
10631(a)	Describe other demographic factors affecting the supplier's water management planning.	System Description	Section 3.4	**2.3.2**
10631(a)	Indicate the current population of the service area.	System Description and Baselines and Targets	Sections 3.4 and 5.4	**2.3.2**
10631(e)(1)	Quantify past, current, and projected water use, identifying the uses among water use sectors.	System Water Use	Section 4.2	**3.2, 3.4**
10631(e)(3)(A)	Report the distribution system water loss for the most recent 12-month period available.	System Water Use	Section 4.3	**3.4**
10631.1(a)	Include projected water use needed for lower income housing projected in the service area of the supplier.	System Water Use	Section 4.5	**3.6**
10608.20(b)	Retail suppliers shall adopt a 2020 water use target using one of four methods.	Baselines and Targets	Section 5.7 and App E	**-**
10608.20(e)	Retail suppliers shall provide baseline daily per capita water use, urban water use target, interim urban water use target, and	Baselines and Targets	Chapter 5 and App E	**4.2, 4.3, 4.6, 4.10**

	compliance daily per capita water use, along with the bases for determining those estimates, including references to supporting data.			
10608.22	Retail suppliers' per capita daily water use reduction shall be no less than 5 percent of base daily per capita water use of the 5 year baseline. This does not apply if the suppliers base GPCD is at or below 100.	Baselines and Targets	Section 5.7.2	**4.7**
10608.24(a)	Retail suppliers shall meet their interim target by December 31, 2015.	Baselines and Targets	Section 5.8 and App E	**4.10**
10608.24(d)(2)	If the retail supplier adjusts its compliance GPCD using weather normalization, economic adjustment, or extraordinary events, it shall provide the basis for, and data supporting the adjustment.	Baselines and Targets	Section 5.8.2	**-**
10608.36	Wholesale suppliers shall include an assessment of present and proposed future measures, programs, and policies to help their retail water suppliers achieve targeted water use reductions.	Baselines and Targets	Section 5.1	**N/A**
10608.40	Retail suppliers shall report on their progress in meeting their water use targets. The data shall be reported using a standardized form.	Baselines and Targets	Section 5.8 and App E	**-**
10631(b)	Identify and quantify the existing and planned sources of water available for 2015, 2020, 2025, 2030, and 2035.	System Supplies	Chapter 6	**5.2**
10631(b)	Indicate whether groundwater is an existing or planned source of water available to the supplier.	System Supplies	Section 6.2	**5.2**
10631(b)(1)	Indicate whether a groundwater management plan has been adopted by the water supplier or if there is any other specific authorization for groundwater management. Include a copy of the plan or authorization.	System Supplies	Section 6.2.2	**5.2**
10631(b)(2)	Describe the groundwater basin.	System Supplies	Section 6.2.1	**5.2**
10631(b)(2)	Indicate if the basin has been adjudicated and include a copy of the court order or decree and a description of the amount of water the supplier has the legal right to pump.	System Supplies	Section 6.2.2	**5.2**
10631(b)(2)	For unadjudicated basins, indicate whether or not the department has identified the basin as overdrafted, or projected to become overdrafted. Describe efforts by the supplier to eliminate the long-term overdraft condition.	System Supplies	Section 6.2.3	**5.2**
10631(b)(3)	Provide a detailed description and analysis of the location, amount, and sufficiency of	System Supplies	Section 6.2.4	**5.2**

	groundwater pumped by the urban water supplier for the past five years			
10631(b)(4)	Provide a detailed description and analysis of the amount and location of groundwater that is projected to be pumped.	System Supplies	Sections 6.2 and 6.9	**5.9**
10631(d)	Describe the opportunities for exchanges or transfers of water on a short-term or long-term basis.	System Supplies	Section 6.7	**5.7**
10631(g)	Describe the expected future water supply projects and programs that may be undertaken by the water supplier to address water supply reliability in average, single-dry, and multiple-dry years.	System Supplies	Section 6.8	**5.8**
10631(h)	Describe desalinated water project opportunities for long-term supply.	System Supplies	Section 6.6	**5.6**
10631(j)	Retail suppliers will include documentation that they have provided their wholesale supplier(s) – if any - with water use projections from that source.	System Supplies	Section 2.5.1	**1.4**
10631(j)	Wholesale suppliers will include documentation that they have provided their urban water suppliers with identification and quantification of the existing and planned sources of water available from the wholesale to the urban supplier during various water year types.	System Supplies	Section 2.5.1	**N/A**
10633	For wastewater and recycled water, coordinate with local water, wastewater, groundwater, and planning agencies that operate within the supplier's service area.	System Supplies (Recycled Water)	Section 6.5.1	**5.5**
10633(a)	Describe the wastewater collection and treatment systems in the supplier's service area. Include quantification of the amount of wastewater collected and treated and the methods of wastewater disposal.	System Supplies (Recycled Water)	Section 6.5.2	**5.5**
10633(b)	Describe the quantity of treated wastewater that meets recycled water standards, is being discharged, and is otherwise available for use in a recycled water project.	System Supplies (Recycled Water)	Section 6.5.2.2	**5.5**
10633(c)	Describe the recycled water currently being used in the supplier's service area.	System Supplies (Recycled Water)	Section 6.5.3 and 6.5.4	**5.5**
10633(d)	Describe and quantify the potential uses of recycled water and provide a determination of the technical and economic feasibility of those uses.	System Supplies (Recycled Water)	Section 6.5.4	**5.5**
10633(e)	Describe the projected use of recycled water within the supplier's service area at the end of 5, 10, 15, and 20 years, and a description	System Supplies (Recycled Water)	Section 6.5.4	**5.5**

	of the actual use of recycled water in comparison to uses previously projected.			
10633(f)	Describe the actions which may be taken to encourage the use of recycled water and the projected results of these actions in terms of acre-feet of recycled water used per year.	System Supplies (Recycled Water)	Section 6.5.5	**5.5**
10633(g)	Provide a plan for optimizing the use of recycled water in the supplier's service area.	System Supplies (Recycled Water)	Section 6.5.5	**5.5**
10620(f)	Describe water management tools and options to maximize resources and minimize the need to import water from other regions.	Water Supply Reliability Assessment	Section 7.4	**6.4**
10631(c)(1)	Describe the reliability of the water supply and vulnerability to seasonal or climatic shortage.	Water Supply Reliability Assessment	Section 7.1	**6.2**
10631(c)(1)	Provide data for an average water year, a single dry water year, and multiple dry water years	Water Supply Reliability Assessment	Section 7.2	**6.2**
10631(c)(2)	For any water source that may not be available at a consistent level of use, describe plans to supplement or replace that source.	Water Supply Reliability Assessment	Section 7.1	**6.1**
10634	Provide information on the quality of existing sources of water available to the supplier and the manner in which water quality affects water management strategies and supply reliability	Water Supply Reliability Assessment	Section 7.1	**6.1**
10635(a)	Assess the water supply reliability during normal, dry, and multiple dry water years by comparing the total water supply sources available to the water supplier with the total projected water use over the next 20 years.	Water Supply Reliability Assessment	Section 7.3	**6.3**
10632(a) and 10632(a)(1)	Provide an urban water shortage contingency analysis that specifies stages of action and an outline of specific water supply conditions at each stage.	Water Shortage Contingency Planning	Section 8.1	**7.1**
10632(a)(2)	Provide an estimate of the minimum water supply available during each of the next three water years based on the driest three-year historic sequence for the agency.	Water Shortage Contingency Planning	Section 8.9	**7.9**
10632(a)(3)	Identify actions to be undertaken by the urban water supplier in case of a catastrophic interruption of water supplies.	Water Shortage Contingency Planning	Section 8.8	**7.8**
10632(a)(4)	Identify mandatory prohibitions against specific water use practices during water shortages.	Water Shortage Contingency Planning	Section 8.2	**7.2**
10632(a)(5)	Specify consumption reduction methods in the most restrictive stages.	Water Shortage Contingency Planning	Section 8.4	**7.2, 7.4**

10632(a)(6)	Indicated penalties or charges for excessive use, where applicable.	Water Shortage Contingency Planning	Section 8.3	**7.3**
10632(a)(7)	Provide an analysis of the impacts of each of the actions and conditions in the water shortage contingency analysis on the revenues and expenditures of the urban water supplier, and proposed measures to overcome those impacts.	Water Shortage Contingency Planning	Section 8.6	**7.6**
10632(a)(8)	Provide a draft water shortage contingency resolution or ordinance.	Water Shortage Contingency Planning	Section 8.7	**7.7**
10632(a)(9)	Indicate a mechanism for determining actual reductions in water use pursuant to the water shortage contingency analysis.	Water Shortage Contingency Planning	Section 8.5	**7.5**
10631(f)(1)	Retail suppliers shall provide a description of the nature and extent of each demand management measure implemented over the past five years. The description will address specific measures listed in code.	Demand Management Measures	Sections 9.2 and 9.3	**8.2, 8.3**
10631(f)(2)	Wholesale suppliers shall describe specific demand management measures listed in code, their distribution system asset management program, and supplier assistance program.	Demand Management Measures	Sections 9.1 and 9.3	**N/A**
10631(i)	CUWCC members may submit their 2013-2014 CUWCC BMP annual reports in lieu of, or in addition to, describing the DMM implementation in their UWMPs. This option is only allowable if the supplier has been found to be in full compliance with the CUWCC MOU.	Demand Management Measures	Section 9.5	**8.4**
10608.26(a)	Retail suppliers shall conduct a public hearing to discuss adoption, implementation, and economic impact of water use targets.	Plan Adoption, Submittal, and Implementation	Section 10.3	**9.2**
10621(b)	Notify, at least 60 days prior to the public hearing, any city or county within which the supplier provides water that the urban water supplier will be reviewing the plan and considering amendments or changes to the plan.	Plan Adoption, Submittal, and Implementation	Section 10.2.1	**9.1**
10621(d)	Each urban water supplier shall update and submit its 2015 plan to the department by July 1, 2016.	Plan Adoption, Submittal, and Implementation	Sections 10.3.1 and 10.4	**1.1, 9.3**
10635(b)	Provide supporting documentation that Water Shortage Contingency Plan has been, or will be, provided to any city or county within which it provides water, no later than 60 days after the submission of the plan to DWR.	Plan Adoption, Submittal, and Implementation	Section 10.4.4	**9.3**

10642	Provide supporting documentation that the urban water supplier made the plan available for public inspection, published notice of the public hearing, and held a public hearing about the plan.	Plan Adoption, Submittal, and Implementation	Sections 10.2.2, 10.3, and 10.5	**9.2**
10642	The water supplier is to provide the time and place of the hearing to any city or county within which the supplier provides water.	Plan Adoption, Submittal, and Implementation	Sections 10.2.1	**9.1**
10642	Provide supporting documentation that the plan has been adopted as prepared or modified.	Plan Adoption, Submittal, and Implementation	Section 10.3.1	**-**
10644(a)	Provide supporting documentation that the urban water supplier has submitted this UWMP to the California State Library.	Plan Adoption, Submittal, and Implementation	Section 10.4.3	**9.3, 9.4**
10644(a)(1)	Provide supporting documentation that the urban water supplier has submitted this UWMP to any city or county within which the supplier provides water no later than 30 days after adoption.	Plan Adoption, Submittal, and Implementation	Section 10.4.4	**9.3, 9.4**
10644(a)(2)	The plan, or amendments to the plan, submitted to the department shall be submitted electronically.	Plan Adoption, Submittal, and Implementation	Sections 10.4.1 and 10.4.2	**4.3**
10645	Provide supporting documentation that, not later than 30 days after filing a copy of its plan with the department, the supplier has or will make the plan available for public review during normal business hours.	Plan Adoption, Submittal, and Implementation	Section 10.5	**9.4**

APPENDIX B – SBX7 – 7 VERIFICATION TABLES

Appendix B

2015 UWMP SB X7 – 7 Verification Tables

SB X7-7 Table 0: Units of Measure Used in UWMP* *(select one from the drop down list)*
Acre Feet
**The unit of measure must be consistent with Table 2-3*
NOTES:

SB X7-7 Table-1: Baseline Period Ranges

Baseline	Parameter	Value	Units
10- to 15-year baseline period	2008 total water deliveries	58,175	Acre Feet
	2008 total volume of delivered recycled water	635	Acre Feet
	2008 recycled water as a percent of total deliveries	1.09%	Percent
	Number of years in baseline period[1, 2]	10	Years
	Year beginning baseline period range	1995	
	Year ending baseline period range[3]	2004	
5-year baseline period	Number of years in baseline period	5	Years
	Year beginning baseline period range	2004	
	Year ending baseline period range[4]	2008	

[1] *If the 2008 recycled water percent is less than 10 percent, then the first baseline period is a continuous 10-year period. If the amount of recycled water delivered in 2008 is 10 percent or greater, the first baseline period is a continuous 10- to 15-year period.* [2] *The Water Code requires that the baseline period is between 10 and 15 years. However, DWR recognizes that some water suppliers may not have the minimum 10 years of baseline data.*

[3] *The ending year must be between December 31, 2004 and December 31, 2010.*

[4] *The ending year must be between December 31, 2007 and December 31, 2010.*

NOTES:

SB X7-7 Table 2: Method for Population Estimates	
Method Used to Determine Population (may check more than one)	
☐	**1. Department of Finance** (DOF) DOF Table E-8 (1990 - 2000) and (2000-2010) and DOF Table E-5 (2011 - 2015) when available
☑	**2. Persons-per-Connection Method**
☐	**3. DWR Population Tool**
☐	**4. Other** DWR recommends pre-review
NOTES:	

SB X7-7 Table 3: Service Area Population		
Year		**Population**
10 to 15 Year Baseline Population		
Year 1	1995	132,882
Year 2	1996	135,001
Year 3	1997	136,874
Year 4	1998	139,556
Year 5	1999	143,175
Year 6	2000	148,159
Year 7	2001	152,221
Year 8	2002	161,267
Year 9	2003	166,359
Year 10	2004	170,784
Year 11		
Year 12		
Year 13		
Year 14		
Year 15		
5 Year Baseline Population		
Year 1	2004	170,784
Year 2	2005	179,523
Year 3	2006	182,035
Year 4	2007	184,369
Year 5	2008	184,669
2015 Compliance Year Population		
2015		200,466
NOTES:		

SB X7-7 Table 4: Annual Gross Water Use *

Baseline Year *Fm SB X7-7 Table 3*		Volume Into Distribution System *This column will remain blank until SB X7-7 Table 4-A is completed.*	Deductions					Annual Gross Water Use
			Exported Water	Change in Dist. System Storage (+/-)	Indirect Recycled Water *This column will remain blank until SB X7-7 Table 4-B is completed.*	Water Delivered for Agricultural Use	Process Water *This column will remain blank until SB X7-7 Table 4-D is completed.*	
10 to 15 Year Baseline - Gross Water Use								
Year 1	1995	42,132	-		-	101	-	42,031
Year 2	1996	45,476	-		-	151	-	45,325
Year 3	1997	47,219	-		-	133	-	47,086
Year 4	1998	41,865	-		-	88	-	41,777
Year 5	1999	49,410	-		-	103	-	49,307
Year 6	2000	50,717	73		-	112	-	50,532
Year 7	2001	48,063	-		-	73	-	47,990
Year 8	2002	52,422	307		-	80	-	52,035
Year 9	2003	51,899	437		-	54	-	51,409
Year 10	2004	54,826	385		-	55	-	54,386
Year 11	0	-			-		-	-
Year 12	0	-			-		-	-
Year 13	0	-			-		-	-
Year 14	0	-			-		-	-
Year 15	0	-			-		-	-
10 - 15 year baseline average gross water use								**48,188**
5 Year Baseline - Gross Water Use								
Year 1	2004	54,826	385		-	55	-	54,386
Year 2	2005	55,978	437		-	18	-	55,523
Year 3	2006	57,977	165		-	18	-	57,794
Year 4	2007	61,035	165		-	22	-	60,848
Year 5	2008	57,541	-		-	16	-	57,524
5 year baseline average gross water use								**57,215**
2015 Compliance Year - Gross Water Use								
2015		41,451	16		-	33	-	**41,403**

* NOTE that the units of measure must remain consistent throughout the UWMP, as reported in Table 2-3

NOTES:

SB X7-7 Table 4-A: Volume Entering the Distribution System(s)
Complete one table for each source.

Name of Source	Chino Basin Groundwater
This water source is:	
☑	The supplier's own water source
☐	A purchased or imported source

Baseline Year *Fm SB X7-7 Table 3*		Volume Entering Distribution System	Meter Error Adjustment* *Optional (+/-)*	Corrected Volume Entering Distribution System
10 to 15 Year Baseline - Water into Distribution System				
Year 1	1995	6,297		6,297
Year 2	1996	7,311		7,311
Year 3	1997	7,764		7,764
Year 4	1998	5,101		5,101
Year 5	1999	7,737		7,737
Year 6	2000	6,195		6,195
Year 7	2001	6,899		6,899
Year 8	2002	10,580		10,580
Year 9	2003	10,020		10,020
Year 10	2004	12,582		12,582
Year 11	0			-
Year 12	0			-
Year 13	0			-
Year 14	0			-
Year 15	0			-
5 Year Baseline - Water into Distribution System				
Year 1	2004	12,582		12,582
Year 2	2005	13,328		13,328
Year 3	2006	16,814		16,814
Year 4	2007	16,781		16,781
Year 5	2008	19,232		19,232
2015 Compliance Year - Water into Distribution System				
2015		18,760		18,760

** Meter Error Adjustment - See guidance in Methodology 1, Step 3 of Methodologies Document*

NOTES:

SB X7-7 Table 4-A: Volume Entering the Distribution				
Name of Source	Cucamonga Basin Groundwater			
This water source is:				
☑	The supplier's own water source			
☐	A purchased or imported source			
Baseline Year *Fm SB X7-7 Table 3*		Volume Entering Distribution System	Meter Error Adjustment* *Optional (+/-)*	Corrected Volume Entering Distribution System
10 to 15 Year Baseline - Water into Distribution System				
Year 1	1,995	14,200		14,200
Year 2	1,996	15,319		15,319
Year 3	1,997	14,180		14,180
Year 4	1,998	9,764		9,764
Year 5	1,999	13,661		13,661
Year 6	2,000	10,642		10,642
Year 7	2,001	6,604		6,604
Year 8	2,002	6,719		6,719
Year 9	2,003	5,051		5,051
Year 10	2,004	6,714		6,714
Year 11	-			0
Year 12	-			0
Year 13	-			0
Year 14	-			0
Year 15	-			0
5 Year Baseline - Water into Distribution System				
Year 1	2,004	6,714		6,714
Year 2	2,005	7,518		7,518
Year 3	2,006	6,497		6,497
Year 4	2,007	5,019		5,019
Year 5	2,008	4,450		4,450
2015 Compliance Year - Water into Distribution System				
2015		8,439		8,439
** Meter Error Adjustment - See guidance in Methodology 1, Step 3 of Methodologies Document*				
NOTES:				

SB X7-7 Table 4-A: Volume Entering the Distribution				
Name of Source	Imported Water (State Water Project)			
This water source is:				
☐	The supplier's own water source			
☑	A purchased or imported source			
Baseline Year *Fm SB X7-7 Table 3*		Volume Entering Distribution System	Meter Error Adjustment* *Optional (+/-)*	Corrected Volume Entering Distribution System
10 to 15 Year Baseline - Water into Distribution System				
Year 1	1,995	12,412		12,412
Year 2	1,996	16,932		16,932
Year 3	1,997	18,587		18,587
Year 4	1,998	17,419		17,419
Year 5	1,999	21,854		21,854
Year 6	2,000	29,460		29,460
Year 7	2,001	28,905		28,905
Year 8	2,002	32,635		32,635
Year 9	2,003	33,329		33,329
Year 10	2,004	33,638		33,638
Year 11	-			0
Year 12	-			0
Year 13	-			0
Year 14	-			0
Year 15	-			0
5 Year Baseline - Water into Distribution System				
Year 1	2,004	33,638		33,638
Year 2	2,005	28,109		28,109
Year 3	2,006	29,318		29,318
Year 4	2,007	36,041		36,041
Year 5	2,008	28,551		28,551
2015 Compliance Year - Water into Distribution System				
2015		13,195		13,195
** Meter Error Adjustment - See guidance in Methodology 1, Step 3 of Methodologies Document*				
NOTES:				

SB X7-7 Table 4-A: Volume Entering the Distribution				
Name of Source	Cucamonga Canyon Water			
This water source is:				
☑	The supplier's own water source			
☐	A purchased or imported source			
Baseline Year *Fm SB X7-7 Table 3*		Volume Entering Distribution System	Meter Error Adjustment* *Optional (+/-)*	Corrected Volume Entering Distribution System
10 to 15 Year Baseline - Water into Distribution System				
Year 1	1,995	0		0
Year 2	1,996	0		0
Year 3	1,997	586		586
Year 4	1,998	1,612		1,612
Year 5	1,999	1,664		1,664
Year 6	2,000	1,053		1,053
Year 7	2,001	1,648		1,648
Year 8	2,002	492		492
Year 9	2,003	958		958
Year 10	2,004	410		410
Year 11	-			0
Year 12	-			0
Year 13	-			0
Year 14	-			0
Year 15	-			0
5 Year Baseline - Water into Distribution System				
Year 1	2,004	410		410
Year 2	2,005	0		0
Year 3	2,006	0		0
Year 4	2,007	141		141
Year 5	2,008	1,700		1,700
2015 Compliance Year - Water into Distribution System				
2015		363		363
** Meter Error Adjustment - See guidance in Methodology 1, Step 3 of Methodologies Document*				
NOTES:				

SB X7-7 Table 4-A: Volume Entering the Distribution				
Name of Source	Deer Canyon Water			
This water source is:				
☑	The supplier's own water source			
☐	A purchased or imported source			
Baseline Year *Fm SB X7-7 Table 3*		Volume Entering Distribution System	Meter Error Adjustment* *Optional (+/-)*	Corrected Volume Entering Distribution System
10 to 15 Year Baseline - Water into Distribution System				
Year 1	1,995	2,355		2,355
Year 2	1,996	1,091		1,091
Year 3	1,997	1,033		1,033
Year 4	1,998	2,028		2,028
Year 5	1,999	640		640
Year 6	2,000	504		504
Year 7	2,001	579		579
Year 8	2,002	209		209
Year 9	2,003	453		453
Year 10	2,004	249		249
Year 11	-			0
Year 12	-			0
Year 13	-			0
Year 14	-			0
Year 15	-			0
5 Year Baseline - Water into Distribution System				
Year 1	2,004	249		249
Year 2	2,005	603		603
Year 3	2,006	187		187
Year 4	2,007	73		73
Year 5	2,008	78		78
2015 Compliance Year - Water into Distribution System				
2015		189		189
** Meter Error Adjustment - See guidance in Methodology 1, Step 3 of Methodologies Document*				
NOTES:				

SB X7-7 Table 4-A: Volume Entering the Distribution				
Name of Source	Day/East Canyon Water			
This water source is:				
☑	The supplier's own water source			
☐	A purchased or imported source			
Baseline Year *Fm SB X7-7 Table 3*		Volume Entering Distribution System	Meter Error Adjustment* *Optional (+/-)*	Corrected Volume Entering Distribution System
10 to 15 Year Baseline - Water into Distribution System				
Year 1	1,995	6,867		6,867
Year 2	1,996	4,823		4,823
Year 3	1,997	5,069		5,069
Year 4	1,998	5,940		5,940
Year 5	1,999	3,853		3,853
Year 6	2,000	2,864		2,864
Year 7	2,001	3,428		3,428
Year 8	2,002	1,775		1,775
Year 9	2,003	2,088		2,088
Year 10	2,004	1,233		1,233
Year 11	-			0
Year 12	-			0
Year 13	-			0
Year 14	-			0
Year 15	-			0
5 Year Baseline - Water into Distribution System				
Year 1	2,004	1,233		1,233
Year 2	2,005	6,374		6,374
Year 3	2,006	5,161		5,161
Year 4	2,007	2,979		2,979
Year 5	2,008	3,485		3,485
2015 Compliance Year - Water into Distribution System				
2015		498		498
** Meter Error Adjustment - See guidance in Methodology 1, Step 3 of Methodologies Document*				
NOTES:				

SB X7-7 Table 4-A: Volume Entering the Distribution				
Name of Source	FWC Interconnection - Transfer from FWC			
This water source is:				
☐	The supplier's own water source			
☑	A purchased or imported source			
Baseline Year *Fm SB X7-7 Table 3*		Volume Entering Distribution System	Meter Error Adjustment* *Optional (+/-)*	Corrected Volume Entering Distribution System
10 to 15 Year Baseline - Water into Distribution System				
Year 1	1,995	0		0
Year 2	1,996	0		0
Year 3	1,997	0		0
Year 4	1,998	0		0
Year 5	1,999	0		0
Year 6	2,000	0		0
Year 7	2,001	0		0
Year 8	2,002	13		13
Year 9	2,003	0		0
Year 10	2,004	0		0
Year 11	-			0
Year 12	-			0
Year 13	-			0
Year 14	-			0
Year 15	-			0
5 Year Baseline - Water into Distribution System				
Year 1	2,004	0		0
Year 2	2,005	45.51		46
Year 3	2,006	0.18		0
Year 4	2,007	0		0
Year 5	2,008	45		45
2015 Compliance Year - Water into Distribution System				
2015		8		8
** Meter Error Adjustment - See guidance in Methodology 1, Step 3 of Methodologies Document*				
NOTES:				

SB X7-7 Table 4-C.1: Process Water Deduction Eligibility					
Criteria 1 Industrial water use is equal to or greater than 12% of gross water use					
Baseline Year *Fm SB X7-7 Table 3*		Gross Water Use Without Process Water Deduction	Industrial Water Use	Percent Industrial Water	**Eligible for Exclusion Y/N**
10 to 15 Year Baseline - Process Water Deduction Eligibility					
Year 1	1995	42,031	2,220	5%	NO
Year 2	1996	45,325	2,020	4%	NO
Year 3	1997	47,086	2,317	5%	NO
Year 4	1998	41,777	2,254	5%	NO
Year 5	1999	49,307	2,367	5%	NO
Year 6	2000	50,532	2,598	5%	NO
Year 7	2001	47,990	2,426	5%	NO
Year 8	2002	52,035	2,465	5%	NO
Year 9	2003	51,409	2,462	5%	NO
Year 10	2004	54,386	2,495	5%	NO
Year 11	0	-			NO
Year 12	0	-			NO
Year 13	0	-			NO
Year 14	0	-			NO
Year 15	0	-			NO
5 Year Baseline - Process Water Deduction Eligibility					
Year 1	2004	54,386	2,495	5%	NO
Year 2	2005	55,523	2,446	4%	NO
Year 3	2006	57,794	2,755	5%	NO
Year 4	2007	60,848	2,506	4%	NO
Year 5	2008	57,524	2,589	5%	NO
2015 Compliance Year - Process Water Deduction Eligiblity					
2015		41,403	2,126	5%	NO
NOTES:					

SB X7-7 Table 4-C.2: Process Water Deduction Eligibility					
Criteria 2 Industrial water use is equal to or greater than 15 GPCD					
Baseline Year *Fm SB X7-7 Table 3*		Industrial Water Use	Population	Industrial GPCD	**Eligible for Exclusion Y/N**
10 to 15 Year Baseline - Process Water Deduction Eligibility					
Year 1	1995	2,220	132,882	15	NO
Year 2	1996	2,020	135,001	13	NO
Year 3	1997	2,317	136,874	15	YES
Year 4	1998	2,254	139,556	14	NO
Year 5	1999	2,367	143,175	15	NO
Year 6	2000	2,598	148,159	16	YES
Year 7	2001	2,426	152,221	14	NO
Year 8	2002	2,465	161,267	14	NO
Year 9	2003	2,462	166,359	13	NO
Year 10	2004	2,495	170,784	13	NO
Year 11	0		-		NO
Year 12	0		-		NO
Year 13	0		-		NO
Year 14	0		-		NO
Year 15	0		-		NO
5 Year Baseline - Process Water Deduction Eligibility					
Year 1	2004	2,495	170,784	13	NO
Year 2	2005	2,446	179,523	12	NO
Year 3	2006	2,755	182,035	14	NO
Year 4	2007	2,506	184,369	12	NO
Year 5	2008	2,589	184,669	13	NO
2015 Compliance Year - Process Water Deduction Eligibility					
2015		2,126	200,466	9	NO
NOTES:					

SB X7-7 Table 4-C.3: Process Water Deduction Eligibility

Criteria 3

Non-industrial use is equal to or less than 120 GPCD

Baseline Year *Fm SB X7-7 Table 3*		Gross Water Use Without Process Water Deduction *Fm SB X7-7 Table 4*	Industrial Water Use	Non-industrial Water Use	Population *Fm SB X7-7 Table 3*	Non-Industrial GPCD	**Eligible for Exclusion Y/N**
10 to 15 Year Baseline - Process Water Deduction Eligibility							
Year 1	1995	42,031		42,031	132,882	282	NO
Year 2	1996	45,325		45,325	135,001	300	NO
Year 3	1997	47,086		47,086	136,874	307	NO
Year 4	1998	41,777		41,777	139,556	267	NO
Year 5	1999	49,307		49,307	143,175	307	NO
Year 6	2000	50,532		50,532	148,159	304	NO
Year 7	2001	47,990		47,990	152,221	281	NO
Year 8	2002	52,035		52,035	161,267	288	NO
Year 9	2003	51,409		51,409	166,359	276	NO
Year 10	2004	54,386		54,386	170,784	284	NO
Year 11	0	-		-	-		NO
Year 12	0	-		-	-		NO
Year 13	0	-		-	-		NO
Year 14	0	-		-	-		NO
Year 15	0	-		-	-		NO
5 Year Baseline - Process Water Deduction Eligibility							
Year 1	2004	54,386		54,386	170,784	284	NO
Year 2	2005	55,523		55,523	179,523	276	NO
Year 3	2006	57,794		57,794	182,035	283	NO
Year 4	2007	60,848		60,848	184,369	295	NO
Year 5	2008	57,524		57,524	184,669	278	NO
2015 Compliance Year - Process Water Deduction Eligiblity							
2015		41,403		41,403	200,466	184	NO

NOTES:

SB X7-7 Table 4-C.4: Process Water Deduction Eligibility

Criteria 4

Disadvantaged Community. A "Disadvantaged Community" (DAC) is a community with a median household income less than 80 percent of the statewide average.

SELECT ONE

"Disadvantaged Community" status was determined using one of the methods listed below:

☐ **1. IRWM DAC Mapping tool**
http://www.water.ca.gov/irwm/grants/resources_dac.cfm

If using the IRWM DAC Mapping Tool, include a screen shot from the tool showing that the service area is considered a DAC.

☑ **2. 2010 Median Income**

	California Median Household Income	Service Area Median Household Income	Percentage of Statewide Average	**Eligible for Exclusion? Y/N**
2015 Compliance Year - Process Water Deduction Eligibility				
2010	$60,883	$67,486	111%	NO

NOTES:

SB X7-7 Table 5: Gallons Per Capita Per Day (GPCD)				
Baseline Year *Fm SB X7-7 Table 3*		Service Area Population *Fm SB X7-7 Table 3*	Annual Gross Water Use *Fm SB X7-7 Table 4*	Daily Per Capita Water Use (GPCD)
10 to 15 Year Baseline GPCD				
Year 1	1995	132,882	42,031	282
Year 2	1996	135,001	45,325	300
Year 3	1997	136,874	47,086	307
Year 4	1998	139,556	41,777	267
Year 5	1999	143,175	49,307	307
Year 6	2000	148,159	50,532	304
Year 7	2001	152,221	47,990	281
Year 8	2002	161,267	52,035	288
Year 9	2003	166,359	51,409	276
Year 10	2004	170,784	54,386	284
Year 11	0	-	-	
Year 12	0	-	-	
Year 13	0	-	-	
Year 14	0	-	-	
Year 15	0	-	-	
10-15 Year Average Baseline GPCD				**290**
5 Year Baseline GPCD				
Baseline Year *Fm SB X7-7 Table 3*		Service Area Population *Fm SB X7-7 Table 3*	Gross Water Use *Fm SB X7-7 Table 4*	Daily Per Capita Water Use
Year 1	2004	170,784	54,386	284
Year 2	2005	179,523	55,523	276
Year 3	2006	182,035	57,794	283
Year 4	2007	184,369	60,848	295
Year 5	2008	184,669	57,524	278
5 Year Average Baseline GPCD				**283**
2015 Compliance Year GPCD				
2015		200,466	41,403	**184**
NOTES:				

SB X7-7 Table 6: Gallons per Capita per Day *Summary From Table SB X7-7 Table 5*	
10-15 Year Baseline GPCD	290
5 Year Baseline GPCD	283
2015 Compliance Year GPCD	184
NOTES:	

SB X7-7 Table 7: 2020 Target Method *Select Only One*		
Target Method		Supporting Documentation
☑	Method 1	SB X7-7 Table 7A
☐	Method 2	SB X7-7 Tables 7B, 7C, and 7D *Contact DWR for these tables*
☐	Method 3	SB X7-7 Table 7-E
☐	Method 4	Method 4 Calculator
NOTES:		

SB X7-7 Table 7-A: Target Method 1 20% Reduction	
10-15 Year Baseline GPCD	**2020 Target GPCD**
290	**232**
NOTES:	

SB X7-7 Table 7-F: Confirm Minimum Reduction for 2020 Target			
5 Year Baseline GPCD *From SB X7-7 Table 5*	Maximum 2020 Target[1]	Calculated 2020 Target[2]	**Confirmed 2020 Target**
283	269	232	**232**

[1] Maximum 2020 Target is 95% of the 5 Year Baseline GPCD except for suppliers at or below 100 GPCD.

[2] 2020 Target is calculated based on the selected Target Method, see SB X7-7 Table 7 and corresponding tables for agency's calculated target.

NOTES:

SB X7-7 Table 8: 2015 Interim Target GPCD		
Confirmed 2020 Target *Fm SB X7-7 Table 7-F*	10-15 year Baseline GPCD *Fm SB X7-7 Table 5*	**2015 Interim Target GPCD**
232	290	**261**
NOTES:		

SB X7-7 Table 9: 2015 Compliance

Actual 2015 GPCD	2015 Interim Target GPCD	Optional Adjustments *(in GPCD)* Enter "0" if Adjustment Not Used			TOTAL Adjustments	Adjusted 2015 GPCD	2015 GPCD *(Adjusted if applicable)*	**Did Supplier Achieve Targeted Reduction for 2015?**
		Extraordinary Events	Weather Normalization	Economic Adjustment				
184	261	*From Methodology 8 (Optional)*	*From Methodology 8 (Optional)*	*From Methodology 8 (Optional)*	-	184	184	**YES**

NOTES:

APPENDIX C – ORDINANCE NO. 2015-5-1

Appendix C

Ordinance No.2015-5-1 Revising Water Use Efficiency Requirements

STAFF REPORT

Cucamonga Valley Water District

Meeting Date: May 12, 2015

To: **Board of Directors**

SUBJECT: **Adoption of Ordinance No. 2015-5-1 Revising Water Use Efficiency Requirements and Water Supply Shortage Contingency Plan To Comply With Statewide Drought Regulations**

SUMMARY

Purpose The State Water Resources Control Board (SWRCB) has issued an emergency rulemaking for mandatory conservation actions. Some of the additional proposed mandates are currently not stipulated in the District's Water Use Efficiency Requirements. In addition, staff also proposes to increase the number of drought stages currently in the District's Water Supply Shortage Contingency Plan.

Recommendation - It is recommended that the Board of Directors adopt Ordinance No. 2015-5-1 revising the Water Use Efficiency Requirements and Water Supply Shortage Contingency Plan.

Fiscal Impact – None.

Previous Related Action -- In 2009 the District updated its Water Use Efficiency and Water Supply Shortage Contingency Plan in order to address water supply conditions at that time.

Background

In early 2014 the Governor issued a series of Executive Orders declaring a drought State of Emergency. The SWRCB was directed to assess voluntary conservation efforts for urban water agencies, and issue emergency conservation regulations. On August 26, 2014 the Board of Directors declared a Stage 2 Water Supply Alert in order to comply with the state mandates. The District also began reporting its consumption and population data to the SWRCB as part of the requirements.

On April 1, 2015, as dry conditions continued to persist, the Governor issued another Executive Order requiring a mandatory 25% statewide reduction in urban water use. On April 7th, the SWRCB published a Regulatory Framework and issued its Draft Regulation on April 17th. The SWRCB issued a Notice of Proposed Rulemaking on April 28th and will consider taking action to adopt its Regulation at the May 5-6, 2015 meeting. Under the Draft Regulation, the District is required to reduce urban water use by 32% as part of the mandate for a total statewide reduction of 25%. There were also new end-user requirements that are proposed in the Regulation.

Discussion

In order to comply with some of the new directives from the SWRCB staff recommends revisions to the District Code Book, Chapters 4.20 Water Use Efficiency and 4.24 Water Supply Shortage Contingency Plan. The State's proposed Regulation calls for additional end-user requirements, most of which already exist in Chapter 4 Section 4.20.030, Water Use Efficiency Practices. These are best management practices that are always in effect and are part of Stage 1 of the Water Supply Shortage Contingency Plan. There was one item currently not included in the code and will be incorporated:

- Prohibition to the application of potable water to outdoor landscapes during and within 48 hours after measureable rainfall.

It is further recommended that Chapter 4.0 Section 4.24.040 of the Water Supply Shortage Contingency Plan be revised and amended to include additional drought stages. The existing Plan has five drought stages, whereas the new proposed Plan will have a total of seven drought stages, with reduction targets ranging from 10% to 50%.

Each of the stages builds upon the previous stage and is intended to provide the maximum level of flexibility in actions the District could take to achieve the conservation target. There are additional actions included in Stage 6 that address watering turf on public medians, and ensuring that irrigation in new construction is done in a manner consistent with the California Building Standards Commission.

In Stage 7 there is a complete restriction for all non-essential outdoor water use and water for construction purposes is curtailed, unless with the exception of recycled water. Finally, all stages have provisions to access penalties for violations, although it is our intention to work cooperatively with our customers to ensure a maximum level of compliance. The Board of Directors has the authority to enact the Plan for mandatory conservation measures when it becomes necessary through resolution. Below is a summary of the stages:

- STAGE 1 – ENCOURAGING WATER USE EFFICIENCY -This Stage outlines mandatory prohibited water waste practices. Stage 1 remains in effect at all times and does not require the Board of Directors adopt a resolution for implementation.

- STAGE 2 - WATER WATCH - Stage 2 requires customers reduce water usage by ten (10) percent. Hours of watering are limited to 4 p.m. through 9 a.m.

- STAGE 3 - WATER ALERT - Stage 3 requires customers to reduce their water usage by fifteen (15) percent.

- STAGE 4 - CRITICAL WATER ALERT - Stage 4 requires customers to reduce their water usage by twenty (20) percent.

- STAGE 5 – WATER EMERGENCY - Stage 5 requires customers to reduce their water usage by twenty-five (25) percent.

- STAGE 6 – SEVERE WATER EMERGENCY - Stage 6 requires customers reduce water use by thirty-five (35) percent. In addition, (1) the use of potable water on ornamental turf on public street medians is prohibited, and (2) the irrigation of potable water on landscapes outside newly constructed homes and buildings must be done in a manner consistent with regulations or requirements established by the California Building Standards Commission.

- STAGE 7 - WATER CRISIS – CATASTROPHIC - Stage 7 requires customers to reduce their water usage by fifty (50) percent. All non-essential outdoor water may be prohibited as determined by the District and enacted by resolution. Water for construction purposes shall be curtailed during a water emergency crisis with the exception that recycled water may be used for such purposes.

Staff recommends that the Board of Directors adopt Ordinances 2015-5-1 Revising the Water Use Efficiency Requirements and Water Supply Shortage Contingency Plan to comply with statewide drought regulations. As required, a summary of the proposed Ordinance 2015-5-1 was published on the local paper on May 5, 2015.

Respectfully submitted,

Jo Lynne Russo-Pereyra
Assistant General Manager

Approved by:

Martin E. Zvirbulis, P.E.
General Manager/CEO

Attachments:
Ordinance 2015-5-1
Notice of the Public Hearing

ORDINANCE NO. 2015-5-1

ORDINANCE OF THE CUCAMONGA VALLEY WATER DISTRICT REVISING WATER USE EFFICIENCY REQUIRMENTS AND WATER SUPPLY SHORTAGE CONTINGENCY PLAN TO COMPLY WITH STATEWIDE DROUGHT REGULATIONS

WHEREAS, on April 1, 2015, Governor Jerry Brown issued the fourth in a series of Executive Orders directing the State Water Resources Control Board ("SWRCB") to impose restrictions to achieve a statewide 25% reduction in total potable water production through February 2016; and

WHEREAS, on May 5-6, 2015, the SWRCB will take final action to adopt its Emergency Regulation Implementing the 25% Conservation Standard ("Regulation") which includes a prohibition against certain irrigation practices and an order that all urban water suppliers reduce their total potable water production by a defined percentage which has been applied to each urban water supplier; and

WHEREAS, the Board desires to adopt this Ordinance in order to incorporate the additional provisions from the Regulation into the Cucamonga Valley Water District Code ("District Code") in existing Chapter 4.20 Encouraging Water Use Efficiency and Chapter 4.24 Water Supply Shortage Contingency Plan. These District Code revisions will enable the District to implement the requirements that the SWRCB is imposing on the District by way of the Regulation; and

WHEREAS, revisions to the District Code will also provide the framework for declaring Drought Alert Stages and for implementing a corresponding Drought Rate structure in the event such a rate structure is adopted by the Board and made part of the District's rules and regulations. It is anticipated that the Board will consider the adoption of a Drought Rate on June 9, 2015 and if adopted, it is anticipated that such a rate structure would go into effect on July 1, 2015; and

WHEREAS, Water Code Section 31026 provides that the District has the authority to restrict the use of water during any emergency caused by drought, or other threatened or existing water shortage, and to prohibit the wastage of water or the use of water during such periods, for any purpose other than household uses or such other restricted uses as may be determined to be necessary by the District and may prohibit use of such water during such periods for specific uses which the District may from time to time find to be nonessential. The District has the authority to impose monetary fines and penalties and take other applicable actions pursuant to Water Code Sections 350-358, 375-377, and 31029; and

WHEREAS, in accordance with Water Code Sections 350 et seq., 375 et seq., and 31027, at least seven (7) days before consideration of this Ordinance, a Notice of Public Hearing was published in the Inland Valley Daily Bulletin, a newspaper of general circulation. A certified copy of the proposed Ordinance was also posted at the District Offices at least five (5) days before the hearing; and

WHEREAS, currently the District is at a STAGE 2 WATER WATCH, and based on the proposed Regulation by the SWRCB, it is anticipated that the District will need to declare a new drought stage in order to achieve a 32% reduction in total potable water production as mandated by the SWRCB; and

NOW THEREFORE, THE BOARD OF DIRECTORS OF THE CUCAMONGA VALLEY WATER DISTRICT DOES HEREBY ORDAIN AS FOLLOWS:

Section 1 All of the foregoing Recitals are true and correct and the Board so finds and determines. The Recitals set forth above are incorporated herein and made an operative part of this Ordinance.

Section 2 The Board conducted a public hearing on May 12, 2015 at 6:00 p.m., or as soon thereafter as practicable, at the District offices located at 10440 Ashford St., Rancho Cucamonga, CA 91730-2799 as part of the Regular Meeting of the Board.

Section 3 Title 4 – Chapter 4.20 WATER USE EFFICIENCY, Section 4.20.030 of the District Code is hereby amended, in its entirety, in order to include a new provision as item (9):

4.20.030 Water use efficiency practices.

Customers are required to practice the following activities:

(1) Hosing paved areas for health and safety purposes only with the use of a waterbroom or water-efficient pressure washer using not more than five gallons per minute.
(2) Wash vehicles using a hose equipped with a shutoff nozzle so that water does not flow to waste.
(3) All decorative fountains shall be equipped with recirculating systems.
(4) Upon notification by the District, repair all leaks.
(5) Adjust sprinklers so there is no run-off, over-spray or excessive irrigation from the property.
(6) Restaurants will only serve water on request.
(7) Hotels will offer guests the option to not launder linen daily.
(8) Industrial customers will review their water-using processes to evaluate ways to increase water conservation.
(9) Prohibition of watering outdoor landscapes during and within 48 hours after a measureable rainfall.

No water customer of the District shall make, cause, use, or permit the use of water in a manner contrary to any provision of this Chapter.

Section 4 Title 4 – Chapter 4.24 WATER SUPPLY SHORTAGE CONTINGENCY PLAN, Section 4.24.040 of the District Code is hereby revised and amended, in its entirety, in order to make revisions to certain provisions of existing drought alert stages and to add STAGE 6 – SEVERE WATER EMERGENCY and STAGE 7 – WATER CRISIS - CATASTROPHIC:

STAGE 1 – ENCOURAGING WATER USE EFFICIENCY

This Stage [Chapter 4.20 of this Code]) outlines mandatory prohibited water waste practices. Stage 1 remains in effect at all times and does not require the Board of Directors adopt a resolution for implementation.

STAGE 2 - WATER WATCH

A Stage 2 shortage may be declared when the Board of Directors determines that it is likely that the District will require customers to reduce their water usage by ten (10) percent from a time period determined by the District. In addition to Stage 1 measures,

hours of watering are limited to 4 p.m. through 9 a.m., and are enacted by resolution of the Board.

Penalties for violating any of the above provisions will be assessed according to Section 4.24.050

STAGE 3 - WATER ALERT

A Stage 3 shortage may be declared when the Board of Directors determines that it is likely that the District will require customers to reduce their water usage by fifteen (15) percent from a time period determined by the District. In addition to Stage 2 measures, limits may be applied to the number of days, frequency and duration of outdoor watering as determined by the District and enacted by Board resolution.

Penalties for violating any of the above provisions will be assessed according to Section 4.24.050.

STAGE 4 - CRITICAL WATER ALERT

A Stage 4 shortage may be declared when the Board of Directors determines that it is likely that the District will require customers to reduce their water usage by twenty (20) percent from a time period determined by the District. In addition to Stage 3 measures, limits may be applied to the number of days and frequency and duration of outdoor watering as determined by the District when Stage 4 is enacted by resolution of the Board.

Penalties for violating any of the above provisions will be assessed according to Section 4.24.050.

STAGE 5 – WATER EMERGENCY

A Stage 5 shortage may be declared when the Board of Directors determines that it is likely that the District will require customers to reduce their water usage by twenty-five (25) percent from a time period determined by the District. In addition to Stage 4 measures, limits may be applied to the number of days, frequency and duration of outdoor watering as determined by the District and enacted by Board resolution.

Penalties for violating any of the above provisions will be assessed according to Section 4.24.050.

STAGE 6 – SEVERE WATER EMERGENCY

A Stage 6 shortage may be declared when the Board of Directors determines that it is likely that the District will require customers to reduce their water usage by thirty-five (35) percent as a result from a catastrophic event, such as earthquake, loss of imported water supply, other natural disaster or severe drought conditions. In addition to Stage 5 measures, limits may be applied to the number of days, frequency and duration of outdoor watering as determined by the District and enacted by Board resolution. The following end-user prohibitions are also in effect under Stage 6:

a) The irrigation with potable water on ornamental turf areas on public street medians.

b) The irrigation with potable water of landscapes outside newly constructed homes and buildings in a manner inconsistent with regulations or other requirements established by the California Building Standards Commission.

Penalties for violating any of the above provisions will be assessed according to Section 4.24.050.

STAGE 7 - WATER CRISIS - CATASTROPHIC

A Stage 7 shortage may be declared when the Board of Directors determines that it is likely that the District will require customers to reduce their water usage by fifty (50) percent as a result from a catastrophic event, such as earthquake, loss of imported water supply or other natural disaster. In addition to Stage 6 measures, all non-essential outdoor water may be prohibited as determined by the District and enacted by resolution.

Additionally, the use of water for construction purposes shall be curtailed during a water emergency crisis with the exception that recycled water may be used for such purposes. Penalties for violating any of the above provisions will be assessed according to Section 4.24.050

Section 5 The President of the Board shall sign this Ordinance and the Secretary of the Board shall attest thereto, and this Ordinance shall be in full force and effect immediately upon adoption. Within fifteen (15) days after adoption of this Ordinance, a summary of this Ordinance shall be published with the names of the Directors voting for and against this Ordinance and a certified copy of the full text of this Ordinance, along with the names of those Directors voting for and against this Ordinance, shall be posted in the District offices.

Section 6 If any section, subsection, clause or phrase in this Ordinance is for any reason held invalid, the validity of the remainder of this Ordinance shall not be affected thereby. The Board hereby declares that it would have passed this Ordinance and each section, subsection, sentence, clause, or phrase thereof, irrespective of the fact that one or more sections, subsections, sentences, clauses or phrases or the application thereof be held invalid.

ADOPTED this 12th day of May, 2015 by the Board of Directors of the Cucamonga Valley Water District.

James V. Curatalo
President

ATTEST:

Martin E. Zvirbulis
Secretary

APPENDIX D – ORDINANCE NO. 2015-6-1

Appendix D

Ordinance No.2015-6-1 Establishing Rates & Charges for Water Service

ORDINANCE NO. 2015-6-1

AN ORDINANCE OF THE CUCAMONGA VALLEY WATER DISTRICT OF SAN BERNARDINO COUNTY, CALIFORNIA, ESTABLISHING RATES AND CHARGES FOR WATER SERVICE

WHEREAS, the Cucamonga Valley Water District (the "District") is organized and operates pursuant to the County Water District Law, Division 12 commencing with Section 30000 of the California Water Code; and

WHEREAS, the District is authorized to fix and collect charges for the provision of water service pursuant to Water Code Section 31007; and

WHEREAS, the rate structure for the District's bi-monthly water service charges are comprised of two components— a variable Commodity Charge and a fixed Meter Service Charge; and

WHEREAS, the Commodity Charge is determined on the basis of the amount of water served to a parcel of property in hundred cubic feet (HCF) (one HCF = 748 gallons) and consists of 4 tiers which impose higher rates as the level of water consumption increases. This charge is structured to recover a portion of CVWD's fixed costs, and the costs of purchased and other water. The rates for the Meter Service Charge are established on the basis of the size of the water meter serving a property and are calculated to recover the district's fixed costs of water facilities repairs and replacements, as well as the cost of meter reading, billing and customer service; and

WHEREAS, there has been presented to the District Board of Director's proposed rate increases to the water service charges that are designed to proportionately allocate the cost of providing water service to the District's customers, all of which are more fully set forth herein; and

WHEREAS, the state is in the fourth year of a severe drought and mandatory water conservations measures have been implemented statewide; and

WHEREAS, the District has adopted a drought ordinance that specifies different drought stages, depending on the severity of the water shortage. Pursuant to the ordinance each stage beyond stage 1 implements increasing mandatory conservation measures designed to reduce water use and prevent waste; and

WHEREAS, in addition to these conservation measures, the District has determined that, due to the ongoing statewide water shortage emergency, to adopt drought rates that may be implemented during declared drought stages; and

WHEREAS, the District purchases nearly 50% of its water supply from a portion of its water from the Metropolitan Water District of Southern California ("MWD") through the Inland Empire Utilities District (IEUA). The drought has impacted the cost of imported water CVWD purchases from MWD through IEUA and the availability of water supplies; and

WHEREAS, during water shortages, MWD may establish water supply allocations for the amount of water that MWD will deliver to CVWD and other retail water agencies. If CVWD exceeds its allocation, MWD may impose a surcharge or penalty ("MWD Surcharge") on the District for the water it purchases; and

WHEREAS, in addition to any MWD Surcharge that may be imposed on the District, the District anticipates that MWD and IEUA will increase the rates of wholesale water that are sold and delivered to the District and may impose other charges on the District related to its wholesale water service; and

WHEREAS, in developing its rates, the District included projected increases in these costs as part of its long-range financial plan; and

WHEREAS, to ensure that there are sufficient revenues to provide water services to our customers, the District desires to authorize for a five-year period to annually pass through to customers: (1) any increases in the rates for wholesale water and any other charges that MWD or IEUA impose on the District that are greater than those projected in the District's long-range financial plan (each a "Pass-Through Adjustment"). Any Pass-Through Adjustment will only impact the rates of the Commodity Charge set forth in this Ordinance; and

WHEREAS, the annual Pass-Through Adjustments are proposed to be implemented each fiscal year beginning July 1, 2015, and adjusted each fiscal year thereafter, through and including fiscal year commencing July 1, 2019; and

WHEREAS, during the week of April 20, 2015, in accordance with the provisions of Article XIII D, section 6 of the California Constitution, District Staff mailed out notices of the proposed increase in the Water Rates and Service Charges and annual Pass-Through Adjustments (collectively herein, "rate increases"). Such notices were provided to the affected property owners and tenants directly liable for the Water Rates and Service Charges not less than 45 days prior to the public hearing on the proposed establishment of rates and charges as set forth herein; and

WHEREAS, in accordance with Water Code Section 31027(b)(1), at least 5 days before the public hearing, a summary of this Ordinance was published in the Inland Valley Daily Bulletin, a newspaper of general circulation, and a certified copy of the full text of this Ordinance was posted in the District offices; and

WHEREAS, the Board conducted a public hearing on June 9, 2015 at 6:00 p.m. at 10440 Ashford Street, Rancho Cucamonga, CA 91730-2799 in order to receive oral and written testimony regarding this Ordinance. Said date and time were not less than forty five (45) days after the mailing of the notice as set forth above; and

WHEREAS, at the conclusion of the public hearing, written protests against the proposed rate increases were not presented by a majority of record owners of parcels upon which the proposed Water Rates and Service Charges are proposed to be imposed and tenants directly responsible for the payment of Water Rates and Service Charges (i.e., a customer of record); and

WHEREAS, it is deemed to be in the best interests of the District to adopt the rate increases due to the fiscal impacts referenced above.

NOW THEREFORE, THE BOARD OF DIRECTORS OF THE CUCAMONGA VALLEY WATER DISTRICT DOES HEREBY ORDAIN AS FOLLOWS:

Section 1 All of the foregoing Recitals are true and correct and the Board so finds and determines. The Recitals set forth above are incorporated herein, are made findings and determinations of the Board, and are made an operative part of this Ordinance.

Section 2 The Board hereby finds that written protests against the proposed rate increases were not presented by a majority of record owners of parcels upon which the rate increases are proposed to be imposed and tenants directly responsible for the payment of the water service charges (i.e., a customer of record). The Board is therefore authorized to impose the rate increases as set forth herein.

Section 3 The District hereby adopts the following rate increases in the amounts and on the effective dates set forth below and amends Chapter 4.08.020 as follows:

(a) Bimonthly Meter Service Charge. The rates for the bimonthly meter service charge, according to meter size, are as follows:

Meter Size	Effective 7/1/2015	Effective 7/1/2016	Effective 7/1/2017	Effective 7/1/2018
5/8" x 3/4"	$ 30.35	$35.64	$ 41.75	$ 50.00
3/4"	30.35	35.64	41.75	50.00
1"	50.58	59.39	69.58	83.33
1-1/2"	101.16	118.79	139.16	166.67
2"	161.86	190.06	222.65	266.67
3"	303.48	356.36	417.47	500.00
4"	505.80	593.96	695.79	833.33
6"	1,011.60	1,187.87	1,391.57	1,666.67
8"	1,618.57	1,900.59	2,226.51	2,666.67
10"	2,427.85	2,850.88	3,339.77	4,000.00
12"	3,642.00	4,276.80	5,010.00	6,000.00

(b) Water Commodity Charge – Non-Drought. The rates for the Non-Drought water commodity charge and the amount of water allocated to each tier, based on the hydraulic capacity of the customer's meter, are as follows.

Non-Drought Commodity Rate per hcf	**Effective 7/1/2015**	**Effective 7/1/2016**	**Effective 7/1/2017**	**Effective 7/1/2018**
Tier 1	$ 1.59	$ 1.60	$ 1.61	$ 1.62
Tier 2	2.11	2.13	2.14	2.16
Tier 3	2.62	2.66	2.68	2.71
Tier 4	2.99	3.03	3.05	3.07

		Allocation in Units (hcf)			
Meter Size	**Hydraulic Capacity**	**Tier 1 No. of Units**	**Tier 2 No. of Units**	**Tier 3 No. of Units**	**Tier 4 No. of Units**
¾-inch	1.0	0 - 10	11 - 40	41 - 100	> 100
1-inch	1.67	0 - 17	18 - 67	68 - 167	> 167
1.5-inch	3.33	0 - 33	34 - 133	134 - 333	> 333
2-inch	5.33	0 - 53	54 - 213	214 - 533	> 533
3-inch	10.00	0 - 100	101 - 400	401 - 1,000	> 1,000
4-inch	16.67	0 - 167	168 - 667	668 - 1,667	> 1,667
6-inch	33.33	0 - 333	334 - 1,333	1,334 - 3,333	> 3,333
8-inch	53.33	0 - 533	534 - 2,133	2,134 - 5,333	> 5,333
10-inch	80.00	0 - 800	801 - 3,200	3,201 - 8,000	> 8,000
12-inch	120.00	0 - 1,200	1,201 - 4,800	4,801 - 12,000	> 12,000

(c) Water Commodity Drought Rates – Stages 2-7. The rates for the water commodity charge to be implemented during declared drought stages ("Water Commodity Drought Rates") are listed below. The Water Commodity Drought Rates will be enacted by a vote of the Board of Directors in concurrence with the declaration of drought stages as set forth in Chapter 4.24 of the District Code. The amount of water allocated to each tier is based on the hydraulic capacity of the customer's meter as indicated in section (b).

	(10% Conservation)			
Drought Stage 2 Commodity Rate per hcf	**Effective 7/1/2015**	**Effective 7/1/2016**	**Effective 7/1/2017**	**Effective 7/1/2018**
Tier 1	$ 1.69	$ 1.70	$ 1.71	$ 1.72
Tier 2	2.15	2.17	2.18	2.20
Tier 3	2.77	2.81	2.83	2.86
Tier 4	3.56	3.65	3.67	3.70

	(15% Conservation)			
Drought Stage 3 Commodity Rate per hcf	**Effective 7/1/2015**	**Effective 7/1/2016**	**Effective 7/1/2017**	**Effective 7/1/2018**
Tier 1	$ 1.79	$ 1.80	$ 1.81	$ 1.82
Tier 2	2.21	2.24	2.25	2.26
Tier 3	2.83	2.87	2.88	2.91
Tier 4	3.80	3.83	3.86	3.88

	(20% Conservation)			
Drought Stage 4 Commodity Rate per hcf	**Effective 7/1/2015**	**Effective 7/1/2016**	**Effective 7/1/2017**	**Effective 7/1/2018**
Tier 1	$ 1.90	$ 1.92	$ 1.93	$ 1.94
Tier 2	2.29	2.31	2.32	2.33
Tier 3	2.89	2.93	2.94	2.96
Tier 4	4.05	4.07	4.10	4.12

	(25% Conservation)			
Drought Stage 5 Commodity Rate per hcf	**Effective 7/1/2015**	**Effective 7/1/2016**	**Effective 7/1/2017**	**Effective 7/1/2018**
Tier 1	$ 2.03	$ 2.05	$ 2.06	$ 2.07
Tier 2	2.36	2.39	2.39	2.40
Tier 3	2.95	2.99	3.00	3.01
Tier 4	4.37	4.40	4.42	4.44

	(35% Conservation)			
Drought Stage 6 Commodity Rate per hcf	**Effective 7/1/2015**	**Effective 7/1/2016**	**Effective 7/1/2017**	**Effective 7/1/2018**
Tier 1	$ 2.34	$ 2.35	$ 2.37	$ 2.38
Tier 2	2.55	2.56	2.56	2.58
Tier 3	3.09	3.13	3.11	3.11
Tier 4	5.68	5.69	5.75	5.77

	(50% Conservation)			
Drought Stage 7 Commodity Rate per hcf	**Effective 7/1/2015**	**Effective 7/1/2016**	**Effective 7/1/2017**	**Effective 7/1/2018**
Tier 1	$ 2.86	$ 2.88	$ 2.88	$ 2.90
Tier 2	3.16	3.18	3.18	3.19

(D) Pass-Through Adjustments. The Board hereby authorizes, for a five-year period, the imposition of Pass-Through Adjustments.

Pass-Through Adjustments may be imposed in the fiscal year commencing July 1, 2015, and each fiscal year thereafter, through and including the fiscal year commencing July 1,

2019. A Pass-Through Adjustment will only impact the rates of the commodity charge set forth in this Ordinance. Provided, however, that (1) any increase in the rates for wholesale water and any other charged that MWD or IEUA imposes on the district that are greater than those projected in the Water Rate Study ("each a Pass-Through Adjustment"); (2) any increase in the rates of the commodity charge as a result of any Pass-Through Adjustment shall not exceed $1.00 per HCF in any one year; and (3) in no event shall such rates be increased as a result of a Pass-Through Adjustment by more than the cost of providing water service.

Prior to implementing any such future rate increase resulting from a Pass-Through Adjustment, the District General Manager is hereby directed and shall provide written notice of any such rate increase to District customers not less than 30 days prior to the effective date of the rate increase. Any such notice may be provided in the regular billing statements of the District sewer customers. In the event that an increase from a Pass-Through Adjustment is implemented in accordance with this Ordinance, the District General Manager, or his authorized designee, is hereby directed and shall revise the schedule of rates and charges set forth in Part D of Chapter 4.08.020 of Title 4 of the District Code to reflect the rate then in effect as a result of any increase resulting from a Pass-Through Adjustment.

(E) Temporary Water Service Rate. The Temporary Water Service Rate (Construction Water) is as follows:

Temporary Water Service Rate per hcf	**Effective 7/1/2015**	**Effective 7/1/2016**	**Effective 7/1/2017**	**Effective 7/1/2018**
Non-Drought	$ 4.58	$ 4.63	$ 4.65	$ 4.70
Drought Stage 2	4.75	4.80	4.81	4.84
Drought Stage 3	4.85	4.90	4.91	4.94
Drought Stage 4	4.97	5.02	5.03	5.05
Drought Stage 5	5.10	5.15	5.15	5.17
Drought Stage 6	5.34	5.38	5.37	5.39
Drought Stage 7 (if available)	6.10	6.13	6.14	6.15

Section 4 The Board finds and determines that the administration, operation, maintenance and improvements of the District water system, which are to be funded by the increased water rates and service charges set forth herein, are necessary to maintain service within the District' existing service area. The Board further finds that the administration, operation, maintenance and improvements of the District water system, to be funded by the increased water service rates and charges, will not expand the District's system. The District further finds that the adoption of the rates and charges is necessary and reasonable to fund the administration, operation, maintenance and improvements of the District water system. Based on these findings, the Board determines that the adoption of the rates and charges established by this Ordinance are exempt from the requirements of the California Environmental Quality Act pursuant to section 21080(b)(8) of the Public Resources Code and section 15273(a) of the State CEQA Guidelines.

Section 5 All ordinances, resolutions, or administrative actions by the Board of Directors, or parts thereof that are inconsistent with any provision of this Ordinance are hereby

superseded only to the extent of such inconsistency. Except as otherwise specifically set forth herein, all provisions Title 4 of the District Code, including but not limited to Chapter 4.08, shall remain in full force and effect.

Section 6 The President of the Board of Directors shall sign this Ordinance and the Secretary of the Board of Directors shall attest thereto, and this Ordinance shall be in full force and effect immediately upon adoption. Within 15 days after adoption of this Ordinance, a summary of the Ordinance shall be published with the names of those directors voting for and against this Ordinance and a certified copy of the full text of this Ordinance, along with the names of those Directors voting for and against this Ordinance, shall be posted in the District offices.

Section 7 If any section, subsection, clause or phrase in this Ordinance is for any reason held invalid, the validity of the remainder of this Ordinance shall not be affected thereby. The Board hereby declares that it would have passed this Ordinance and each section, subsection, sentence, clause, or phrase thereof, irrespective of the fact that one or more sections, subsections, sentences, clauses or phrases or the application thereof be held invalid.

Section 8 In accordance with Water Code Section 31027(b)(1), within 15 days after adoption, the District Secretary shall (i) prepare a summary of this Ordinance, which shall be published in the Inland Valley Daily Bulletin, a newspaper of general circulation, with the names of those directors voting for and against it; and (ii) post in the Board's office a certified copy of the full text of this Ordinance, along with the names of those directors voting for and against it.

Section 9 This Ordinance shall take effect immediately upon adoption.

ADOPTED this 9th day of June, 2015, by the Board of Directors of the Cucamonga Valley Water District.

CUCAMONGA VALLEY WATER DISTRICT

_____
James Curatalo, President
Board of Directors

ATTEST:

_____
Martin Zvirbulis
Secretary of the Board of Directors

APPENDIX E – ORDINANCE NO. 47

Appendix E

Ordinance No. 47 Rescinding Ordinance 41 & Encourage Water Use Efficiency

ORDINANCE NO. 47

AN ORDINANCE OF THE CUCAMONGA VALLEY WATER DISTRICT OF SAN BERNARDINO COUNTY, CALIFORNIA, RESCINDING ORDINANCE 41 AND ENCOURAGING WATER USE EFFICIENCY

WHEREAS, the State of California and western United States has limited supplies of drinking water, and;

WHEREAS, Cucamonga Valley Water District practices diligent stewardship of this valuable resource, and;

WHEREAS, the District's Board of Directors encourages the efficient use of all water supplies.

WHEREAS, it is hereby declared that the conditions prevailing in areas served by Cucamonga Valley Water District, the areas of the State of California and elsewhere from which the District obtains its water supplies require that the water resources available to the District be put to the maximum beneficial use to the extent to which they are capable, and that waste or unreasonable method of use of water be prevented, and the conservation of such waters is to be exercised with a view to the reasonable and beneficial use thereof in the interests of the people of the District and for the public welfare.

WHEREAS, Water Code Section 31026 authorizes the District to restrict the use of water during any emergency caused by drought, or other threatened or existing water shortage, and to prohibit the waste of District water or the use of District water during such periods, for any purpose other than household use. Other restricted uses may be determined to be necessary by the District.

WHEREAS, Water Code Section 350 et seq. and Section 375 et seq. authorize the District to declare a water shortage emergency condition whenever it finds and determines that the ordinary demands and requirements of water consumers will not be satisfied without depleting the water supply of the District to the extent that there will be insufficient water for human consumption, sanitation and fire protection. The District has the power and authority to enact a water conservation measures pursuant to Water Code Section 350 et seq. and 375 et seq.

NOW, THEREFORE, THE BOARD OF DIRECTORS OF THE CUCAMONGA VALLEY WATER DISTRICT OF SAN BERNARDINO COUNTY, CALIFORNIA, DOES ORDAIN AS FOLLOWS:

SECTION 1: As of the effective date of this Ordinance No. 47, Ordinance No. 47 shall supersede, and otherwise control, over Ordinance 41 and Ordinance 41 shall be of no further force or effect.

SECTION 2: DEFINITIONS

2.1 "DISTRICT": Cucamonga Valley Water District

2.2 "AREA OF SERVICE": For the purposes of this Ordinance, the area of service shall be defined as all of the Cucamonga Valley Water District

2.3 "CUSTOMER/PERSON": Any natural person, firm, or corporation.

2.4 "GENERAL MANAGER/CEO": The person designated by the District to supervise the operation of the public water system and who is charged with certain duties and responsibilities by this Ordinance, or his/her duly authorized representative.

SECTION 3: AUTHORITY

This Ordinance is adopted pursuant to Water Code Sections 31026, 31027, 350 et seq., and 375 et seq. Pursuant to the Water Code Sections 31027, 350 et seq., and 375 et seq., a notice of public hearing was published at least seven (7) days prior to the date of the public hearing which was conducted on March 24, 2009 at 6:00 p.m., or as soon thereafter as practicable at 10440 Ashford Street, Rancho Cucamonga, CA 91730-2799 as part of the Regular Meeting of the Board of Directors. A certified copy of the proposed Ordinance was also posted at the District offices at least five (5) days before the hearing. Notice of the time and place of the public hearing was published in a newspaper of general circulation within the District. The Public Hearing was continued to the May 12, 2009 Regular Meeting of the Board of Directors and a subsequent notice of the continuation was published in the newspaper of general circulation, on the District's website and on the bulletin board at the District office.

SECTION 4: WATER USE EFFICIENCY PRACTICES

Customers are required to practice the following activities:

(1) Hosing paved areas for health and safety purposes only with the use of a waterbroom or water-efficient pressure washer using not more than 5 gallons per minute.

(2) Wash vehicles using a hose equipped with a shutoff nozzle so that water does not flow to waste.

(3) All decorative fountains shall be equipped with recirculating systems.

(4) Upon notification by the District, repair all leaks.

(5) Adjust sprinklers so there is no run-off, over-spray or excessive irrigation from the property.

(6) Restaurants will only serve water on request.

(7) Hotels will offer guests the option to not launder linen daily.

(8) Industrial customers will review their water-using processes to evaluate ways to increase water conservation

No water customer of the District shall make, cause, use, or permit the use of water in a manner contrary to any provision of this Ordinance.

SECTION 5: FAILURE TO COMPLY

Financial penalties will be assessed when a customer who, in the reasonable discretion of the General Manager/CEO, or his/her representative, violates this Ordinance. Exhibit A, attached hereto and incorporated herein by reference, outlines those penalties and the method of notifying a customer that he/she is violating District's Ordinance. If the General Manager/CEO, or his/her representative deems it appropriate, water service will be terminated at the location where the violation occurred due to a failure to comply with this Ordinance or a failure to pay financial penalties. Any such service termination shall be implemented under the District's authority and procedures including, but not limited to, the District's rules and regulations for water service. The regulatory purpose of imposing the requirements and financial penalties, as set forth in this Ordinance and Exhibit "A," are to conserve water, deter waste and unreasonable use of water, encourage efficiency, and to cover the costs incident to the investigation, inspection, and administration of the enforcement of this Ordinance and Exhibit "A." Such costs of this regulatory program include, but are not necessarily limited to, the cost of District personnel for administration of this program, notices, publications, implementation of conservation measures/programs and the monitoring and enforcement of penalties.

SECTION 6: SEVERABILITY

If any provision, paragraph, word, section, or article of this Ordinance is invalidated by any court of competent jurisdiction, the remaining provision, paragraphs, words, sections, and articles shall not be affected and shall continue in full force and effect.

SECTION 7: EFFECTIVE DATE OF ORDINANCE

This Ordinance is effective immediately upon its adoption. Within ten (10) days after adoption of this Ordinance, this full Ordinance with the names of those Directors voting for and against the Ordinance shall be published in a newspaper of general circulation and a certified copy of this Ordinance, along with the names of those Directors voting for and against the Ordinance, will be posted in the District offices.

ADOPTED May 12, 2009

Randall J. Reed
President

ATTEST:

Robert A. DeLoach
Secretary

ORDINANCE NO. 47

EXHIBIT "A"

Financial penalties will be assessed when a customer violates the requirements outlined in Section 4 of Ordinance 47. The penalties are as follows:

(a) First violation. The District shall issue a written notice of a first violation to the water customer.

(b) Second violation. For a second violation, the District shall impose a penalty in the amount of Fifty Dollars ($50.00) which will be added to the water customer's water bill.

(c) Third violation. For a third violation, the District shall impose a penalty in the amount of One Hundred Dollars ($100.00) which will be added to the water customer's water bill.

(d) Fourth violation. After a fourth and any subsequent violation, the District shall impose a penalty in the amount of One Hundred Fifty Dollars ($150.00) which will be added to the water customer's water bill.

The regulatory purposes of imposing the requirements and financial penalties, as set forth in this Ordinance and Exhibit "A," are to conserve water, deter waste and unreasonable use of water, encourage efficiency, and to cover the costs incident to the investigation, inspection, and administration of the enforcement of this Ordinance and Exhibit "A." Such costs of this regulatory program include, but are not necessarily limited to, the cost of District personnel for administration of this program, notices, publications, implementation of conservation measures/programs and the monitoring and enforcement of penalties.

NOTICING

The District shall give notice of violation of Ordinance No. 47 to the water customer as follows:

(a) The first notice of violation shall be a warning given to the customer by using a door hanger.
(b) The second violation shall be in writing by regular mail to the address at which the water customer is normally billed.
(c) Notice of subsequent violations shall be given in writing in the following manner:

(i) By giving the notice to the customer at the property where the violation occurred; or

(ii) If the water customer is absent from or unavailable at the premises at which the violation occurred, by leaving a copy with some person of suitable age and discretion

at the premises and sending a copy through the regular mail to the address at which the water customer is normally billed; or

(iii) If a person of suitable age or discretion cannot be found, then by affixing a copy in a conspicuous place at the premises at which the violation occurred, and also sending a copy through the regular mail to the address at which the customer is normally billed.

The notice shall contain a description of the facts of the violation and a statement of the penalties for each violation.

APPEAL PROCESS

(1) The application of this Ordinance is not intended to have a disproportionate impact on customers who have implemented conservation methods or installed water saving devices.

(2) A water customer may appeal to the District in writing if he/she feels that this Ordinance causes an undue hardship. The written request shall provide a justification for a reduction of a restricted use violation. Documentation must be provided to support the request and reasons outlining the hardship must be included.

(3) The request shall be reviewed by the General Manager or designee(s) and the customer will receive a written response from the District.

(4) A customer may appeal the District's decision by requesting a review by a committee designated by the Board of Directors. The decision of this committee will be final.

STATE OF CALIFORNIA)
COUNTY OF SAN BERNARDINO) ss.

I, **ROBERT A. DeLOACH,** Secretary of the Board of Directors of Cucamonga Valley Water District, do hereby certify that the foregoing **Ordinance No. 47** was adopted by the Board of Directors of said District at a regular board meeting held on **May 12, 2009**. A recorded vote of the Board is as follows:

AYES: Directors Curatalo, Gonzalez, Tiegs, Stoy, Reed

NOES: Directors NONE

ABSENT: Directors None

ROBERT A. DELOACH, SECRETARY
Cucamonga Valley Water District
and the Board of Directors thereof

(SEAL)

APPENDIX F – ORDINANCE NO. 48

Appendix F

Ordinance No. 48 Establishing Water Supply Shortage Contingency Plan

ORDINANCE NO. 48

AN ORDINANCE OF CUCAMONGA VALLEY WATER DISTRICT ESTABLISHING A WATER SUPPLY SHORTAGE CONTINGENCY PLAN

THE BOARD OF DIRECTORS OF THE CUCAMONGA VALLEY WATER DISTRICT DOES ORDAIN AS FOLLOWS:

SECTION l: STATEMENT OF POLICY

It is hereby declared that the conditions prevailing in areas served by Cucamonga Valley Water District, the areas of the State of California and elsewhere from which the District obtains its water supplies require that the water resources available to the District be put to the maximum beneficial use to the extent to which they are capable, and that waste or unreasonable method of use of water be prevented, and the conservation of such waters is to be exercised with a view to the reasonable and beneficial use thereof in the interests of the people of the District and for the public welfare. Water Code Section 350 et seq. and Section 375 et seq. authorize the District to declare a water shortage emergency condition whenever it finds and determines that the ordinary demands and requirements of water consumers will not be satisfied without depleting the water supply of the District to the extent that there will be insufficient water for human consumption, sanitation and fire protection. The District has the power and authority to enact a water shortage contingency plan and water conservation measures pursuant to Water Code Section 350 et seq., to ensure an available water supply at the levels necessary to maintain human consumption, sanitation, and fire protection during the period as described herein.

SECTION 2: DECLARATION OF PURPOSE

The purpose of this Ordinance is to establish a Water Supply Shortage Contingency Plan to minimize the effect of cutbacks in Cucamonga Valley Water District's water supply and to adopt provisions that will significantly reduce the consumption of water thereby extending the available water required for the District's customers. Water shortage conditions can be caused by a variety of reasons, including but not limited to: drought, equipment breakdown, power outage, and failure or maintenance of the imported water system. Shortage conditions can take the form of both short term and long term events. A short term event may only impact operations for a period of hours or days, while long term events could last weeks, months or years. Response to the shortage is dependent upon the severity of the shortage, the part of the system affected, current system demands, and projected longevity of the situation.

SECTION 3: AUTHORIZATION TO IMPLEMENT WATER SHORTAGE CONTINGENCY PLAN

Pursuant to Water Code Sections 31027, 350 et seq. and 375 et seq., a notice of public hearing was published at least seven (7) days prior to the date of the public hearing which was conducted at 6:00 p.m., or as soon thereafter as practicable at 10440 Ashford Street, Rancho Cucamonga, CA 91730-2799 as part of the Regular Meeting of the Board of Directors on March 24, 2009,

and then continued to May 12, 2009, and June 23, 2009. A certified copy of the proposed Ordinance was also posted at the District Offices at least five (5) days before the hearing. Notice of the time and place of the public hearing was published in a newspaper of general circulation within the District.

The Board of Directors shall declare, change and rescind, as applicable, the particular stage of the water supply shortage through the adoption of a resolution from time to time as deemed necessary by the Board of Directors. Within ten (10) calendar days of adoption of the resolution declaring, changing or rescinding the applicable stage of water supply shortage, the Board of Directors shall issue its determination of shortage and corrective measures by public proclamation published in a daily newspaper of general circulation a minimum of three (3) times for three (3) consecutive weeks. Three (3) publications in a newspaper regularly published once a week or more often, with at least five (5) days intervening between the respective publication dates not counting such publication dates, are sufficient. Such declaration and notice shall provide the extent, terms and conditions respecting the use and consumption of water in accordance with the applicable water conservation stage provided by this Ordinance. Upon such declaration and publication of such notice, due and proper notice shall be deemed to have been given each and every person supplied water within the District.

Any prohibitions on the use of water shall become effective immediately upon such publication. Any provisions requiring curtailment in the use of water shall become effective with the first full billing period commencing on or after the date of such publication.

SECTION 4: REDUCED WATER USAGE

STAGE 1 - ORDINANCE NO. 47, "Encouraging Water Use Efficiency"

This Stage (Ordinance No. 47) outlines mandatory prohibited water waste practices. Stage 1 remains in effect at all times and does not require the Board of Directors adopt a resolution for implementation.

STAGE 2 - ALERT

A Stage 2 shortage may be declared when the Board of Directors determines that it is likely that the District will require customers to reduce their water usage by ten percent (10%) from the previous year's billing cycle for fiscal year 2007-2008.

STAGE 3 – WATER WARNING

A Stage 3 shortage may be declared when the Board of Directors determines that it is likely that the District will require customers to reduce their water usage by fifteen percent (15%) by

eliminating outdoor watering up to two days each week. The days of no watering will be assigned by the District when Stage 3 is enacted by resolution of the Board.

Penalties for violating any of the above provisions will be assessed according to Section 5.

STAGE 4 – WATER EMERGENCY

A Stage 4 shortage may be declared when the Board of Directors determines that it is likely that the District will require customers to reduce their water usage by twenty-five percent (25%) by eliminating outdoor watering up to three days each week. The days of no watering will be determined by the District when Stage 4 is enacted by resolution of the Board.

Penalties for violating any of the above provisions will be assessed according to Section 5.

STAGE 5 - WATER SEVERE EMERGENCY

A Stage 5 shortage may be declared when the Board of Directors determines that it is likely that the District will require customers to reduce their water usage by fifty percent (50%) or more by eliminating outdoor watering from four to seven days, to be determined by the severity of the water emergency. The days of no watering will be determined by the District when Stage 5 is enacted by resolution of the board.

Additionally, the use of water for construction purposes shall be curtailed during a severe water emergency with the exception that recycled water may be used for such purposes.

Penalties for violating any of the above provisions will be assessed according to Section 5.

SECTION 5: FAILURE TO COMPLY

Financial penalties will be assessed when a customer who, in the reasonable discretion of the General Manager/CEO, or his/her representative, violates this Ordinance. Exhibit A, attached hereto and incorporated herein by reference, outlines those penalties and the method of notifying a customer that he/she is violating the District's Ordinance. If the General Manager/CEO, or his/her representative deems it appropriate, water service will be terminated at the location where the violation occurred due to a failure to comply with this Ordinance or a failure to pay financial penalties. The regulatory purpose of imposing the requirements and financial penalties, as set forth in this Ordinance and Exhibit "A," are to conserve water, deter waste and unreasonable use of water, encourage efficiency, and to cover the costs incident to the investigation, inspection, and administration of the enforcement of this Ordinance and Exhibit "A." Such costs of this regulatory program include, but are not necessarily limited to, the cost of District personnel for administration of this program, notices, publications, implementation of conservation measures/programs and the monitoring and enforcement of penalties.

SECTION 6: SEVERABILITY

If any provision, paragraph, word, section, or article of this Ordinance is invalidated by any court of competent jurisdiction, the remaining provision, paragraphs, words, sections, and articles shall not be affected and shall continue in full force and effect.

SECTION 7: CONFLICTING PROVISIONS

If provisions of this Ordinance are in conflict with each other, other rules and regulations of the District, any other resolution or ordinance of the District, or any State law or regulation, the more restrictive provisions shall apply.

SECTION 8: EFFECTIVE DATE OF ORDINANCE

This Ordinance is effective immediately upon its adoption. Within ten (10) days after adoption of this Ordinance, this full Ordinance with the names of those Directors voting for and against the Ordinance shall be published in a newspaper of general circulation and a certified copy of this Ordinance, along with the names of those Directors voting for and against the Ordinance, will be posted in the District offices.

ADOPTED this 23rd day of June, 2009

Randall J. Reed
President

ATTEST:

Robert A. DeLoach
Secretary

ORDINANCE NO. 48

EXHIBIT "A"

Financial penalties will be assessed when a customer who violates the requirements outlined in Section 4 of Ordinance 48, Reduced Water Usage. The penalties are as follows:

(a) First violation. The District shall issue a written notice of a first violation to the water customer.

(b) Second violation. For a second violation, the District shall impose a penalty in the amount of Fifty Dollars ($50.00) which will be added to the water customer's water bill.

(c) Third violation. For a third violation, the District shall impose a penalty in the amount of One Hundred Dollars ($100.00) which will be added to the water customer's water bill.

(d) Fourth violation. After a fourth and any subsequent violation, the District shall impose a penalty in the amount of One Hundred Fifty Dollars ($150.00) which will be added to the water customer's water bill.

The regulatory purposes of imposing the requirements and financial penalties, as set forth in this Ordinance and Exhibit "A," are to conserve water, deter waste and unreasonable use of water, encourage efficiency, and to cover the costs incident to the investigation, inspection, and administration of the enforcement of this Ordinance and Exhibit "A." Such costs of this regulatory program include, but are not necessarily limited to, the cost of District personnel for administration of this program, notices, publications, implementation of conservation measures/programs and the monitoring and enforcement of penalties.

NOTICING

The District shall give notice of violation of Ordinance No. 48 to the water customer as follows:

(a) The first notice of violation shall be a warning given to the customer by using a door hanger.
(b) The second violation shall be in writing by regular mail to the address at which the water customer is normally billed.
(c) Notice of subsequent violations shall be given in writing in the following manner:

(i) By giving the notice to the customer at the property where the violation occurred; or

(ii) If the water customer is absent from or unavailable at the premises at which the violation occurred, by leaving a copy with some person of suitable age and discretion

at the premises and sending a copy through the regular mail to the address at which the water customer is normally billed; or

(iii) If a person of suitable age or discretion cannot be found, then by affixing a copy in a conspicuous place at the premises at which the violation occurred, and also sending a copy through the regular mail to the address at which the customer is normally billed.

The notice shall contain a description of the facts of the violation and a statement of the penalties for each violation.

APPEAL PROCESS

(1) The application of this Ordinance is not intended to have a disproportionate impact on customers who have implemented conservation methods or installed water saving devices.

(2) A water customer may appeal to the District in writing if he/she feels that this Ordinance causes an undue hardship. The written request shall provide a justification for a reduction of a restricted use violation. Documentation must be provided to support the request and reasons outlining the hardship must be included.

(3) The request shall be reviewed by the General Manager or designee(s) and the customer will receive a written response from the District.

(4) A customer may appeal the District's decision by requesting a review by a committee designated by the Board of Directors. The decision of this committee will be final.

APPENDIX G – 2015 UWMP TABLES

Appendix G

2015 UWMP Tables

Table 2-1 Retail Only: Public Water Systems			
Public Water System Number	Public Water System Name	Number of Municipal Connections 2015	Volume of Water Supplied 2015
3610018	Cucamonga Valley Water District	48,095	42,678
	TOTAL	48,095	42,678
NOTES: Inlcudes Recycled Water Connections and RW Supply			

Table 2-2: Plan Identification			
Select Only One	**Type of Plan**		**Name of RUWMP or Regional Alliance** *if applicable* *drop down list*
☑	**Individual UWMP**		
	☐	Water Supplier is also a member of a RUWMP	
	☐	Water Supplier is also a member of a Regional Alliance	
☐	**Regional Urban Water Management Plan (RUWMP)**		
NOTES:			

Table 2-3: Agency Identification	
Type of Agency (select one or both)	
☐	Agency is a wholesaler
☑	Agency is a retailer
Fiscal or Calendar Year (select one)	
☑	UWMP Tables Are in Calendar Years
☐	UWMP Tables Are in Fiscal Years
If Using Fiscal Years Provide Month and Date that the Fiscal Year Begins (mm/dd)	
Units of Measure Used in UWMP (select from Drop down)	
Unit	AF
NOTES: Most of the tables are in Calendar Year unless mentioned.	

Table 2-4 Retail: Water Supplier Information Exchange
The retail supplier has informed the following wholesale supplier(s) of projected water use in accordance with CWC 10631.
Wholesale Water Supplier Name *(Add additional rows as needed)*
Inland Empire Utilities Agency (IEUA)
NOTES:

Table 3-1 Retail: Population - Current and Projected						
Population Served	2015	2020	2025	2030	2035	2040*(opt)*
	200,466	209,707	219,118	228,200	228,200	
NOTES:						

Table 4-1 Retail: Demands for Potable and Raw Water - Actual			
Use Type *(Add additional rows as needed)*	2015 Actual		
Drop down list *May select each use multiple times* *These are the only Use Types that will be recognized by the WUEdata online submittal tool*	Additional Description *(as needed)*	Level of Treatment When Delivered *Drop down list*	Volume
Single Family		Drinking Water	21,926
Multi-Family		Drinking Water	3,802
Commercial		Drinking Water	2,004
Industrial		Drinking Water	2,126
Institutional/Governmental		Drinking Water	648
Landscape		Drinking Water	8,039
Sales/Transfers/Exchanges to other agencies		Drinking Water	16
Agricultural irrigation		Drinking Water	33
Other	Construction Meters	Drinking Water	137
Losses		Drinking Water	2,721
		TOTAL	41,451
NOTES:			

Table 4-2 Retail: Demands for Potable and Raw Water - Projected

Use Type *(Add additional rows as needed)* ***Drop down list*** *May select each use multiple times* *These are the only Use Types that will be recognized by the WUEdata online submittal tool*	Additional Description *(as needed)*	Projected Water Use *Report To the Extent that Records are Available*				
		2020	2025	2030	2035	2040-opt
Single Family		32,000	33,304	34,608	34,608	
Multi-Family		4,731	4,924	5,116	5,116	
Commercial		2,553	2,657	2,761	2,761	
Industrial		2,614	2,721	2,827	2,827	
Institutional/Governmental		736	765	795	795	
Landscape		12,529	13,040	13,550	13,550	
Sales/Transfers/Exchanges to other agencies		0	0	0	0	
Agricultural irrigation		41	43	44	44	
Other	Construction Meters	162	168	175	175	
Losses		3,534	3,678	3,822	3,822	
TOTAL		58,900	61,300	63,700	63,700	0

NOTES:

Table 4-3 Retail: Total Water Demands						
	2015	2020	2025	2030	2035	2040 *(opt)*
Potable and Raw Water *From Tables 4-1 and 4-2*	41,451	58,900	61,300	63,700	63,700	0
Recycled Water Demand* *From Table 6-4*	1,227	1,600	1,800	2,000	2,000	0
TOTAL WATER DEMAND	42,678	60,500	63,100	65,700	65,700	0
**Recycled water demand fields will be blank until Table 6-4 is complete.*						
NOTES:						

Table 4-4 Retail: 12 Month Water Loss Audit Reporting	
Reporting Period Start Date (mm/yyyy)	Volume of Water Loss*
01/2015	2203
** Taken from the field "Water Losses" (a combination of apparent losses and real losses) from the AWWA worksheet.*	
NOTES:	

Table 4-5 Retail Only: Inclusion in Water Use Projections	
Are Future Water Savings Included in Projections? (Refer to Appendix K of UWMP Guidebook) *Drop down list (y/n)*	No
If "Yes" to above, state the section or page number, in the cell to the right, where citations of the codes, ordinances, etc… utilized in demand projections are found.	
Are Lower Income Residential Demands Included In Projections? *Drop down list (y/n)*	Yes
NOTES:	

Table 5-1 Baselines and Targets Summary
Retail Agency or Regional Alliance Only

Baseline Period	Start Year	End Year	Average Baseline GPCD*	2015 Interim Target *	Confirmed 2020 Target*
10-15 year	*1995*	*2004*	*290*	*261*	*232*
5 Year	*2004*	*2008*	*283*		

*All values are in Gallons per Capita per Day (GPCD)

NOTES:

Table 5-2: 2015 Compliance

Retail Agency or Regional Alliance Only

Actual 2015 GPCD*	2015 Interim Target GPCD*	Optional Adjustments to 2015 GPCD (Enter "0" if no adjustment is made) From *Methodology 8*					2015 GPCD* *(Adjusted if applicable)*	Did Supplier Achieve Targeted Reduction for 2015? Y/N
		Extraordinary Events*	Economic Adjustment*	Weather Normalization*	TOTAL Adjustments*	Adjusted 2015 GPCD*		
184	261				0	184	184	Yes

**All values are in Gallons per Capita per Day (GPCD)*

NOTES:

Table 6-1 Retail: Groundwater Volume Pumped						
☐	Supplier does not pump groundwater. The supplier will not complete the table below.					
Groundwater Type ***Drop Down List*** *May use each category multiple times*	Location or Basin Name	2011	2012	2013	2014	2015
Add additional rows as needed						
Alluvial Basin	Chino Basin	19380	15041	18437	13626	18760
Alluvial Basin	Cucamonga Basin	3645	6028	6523	10724	8439
	TOTAL	23,025	21,069	24,960	24,350	27,199
NOTES:						

Table 6-2 Retail: Wastewater Collected Within Service Area in 2015						
☐	There is no wastewater collection system. The supplier will not complete the table below.					
	Percentage of 2015 service area covered by wastewater collection system *(optional)*					
	Percentage of 2015 service area population covered by wastewater collection system *(optional)*					
Wastewater Collection			**Recipient of Collected Wastewater**			
Name of Wastewater Collection Agency	Wastewater Volume Metered or Estimated? *Drop Down List*	Volume of Wastewater Collected from UWMP Service Area 2015	Name of Wastewater Treatment Agency Receiving Collected Wastewater	Treatment Plant Name	Is WWTP Located Within UWMP Area? *Drop Down List*	Is WWTP Operation Contracted to a Third Party? *(optional)* *Drop Down List*
Add additional rows as needed						
CVWD	Estimated	9,501	IEUA	RP-1	No	No
CVWD	Estimated	4,799	IEUA	RP-4	Yes	No
Total Wastewater Collected from Service Area in 2015:		14,300				

NOTES: CVWD's collected sewerage is sent to Inland Empire Utilities Agency for treatment.

Table 6-3 Retail: Wastewater Treatment and Discharge Within Service Area in 2015

☐ No wastewater is treated or disposed of within the UWMP service area.
The supplier will not complete the table below.

Wastewater Treatment Plant Name	Discharge Location Name or Identifier	Discharge Location Description	Wastewater Discharge ID Number *(optional)*	Method of Disposal *Drop down list*	Does This Plant Treat Wastewater Generated Outside the Service Area?	Treatment Level *Drop down list*	2015 volumes			
							Wastewater Treated	Discharged Treated Wastewater	Recycled Within Service Area	Recycled Outside of Service Area
Add additional rows as needed										
RP-1		Santa Ana River		River or creek outfall	Yes	Tertiary	28,896			
Rp-4		Santa Ana River		River or creek outfall	Yes	Tertiary	10,976			
						Total	39,872	0	0	0

NOTES: CVWD's collected sewerage is sent to Inland Empire Utilities Agency for treatment. 2015 volumes shown is totals for Treatment Plant as addressed in IEUA's 2015 UWMP.

Table 6-4 Retail: Current and Projected Recycled Water Direct Beneficial Uses Within Service Area

☐ Recycled water is not used and is not planned for use within the service area of the supplier. The supplier will not complete the table below.

Name of Agency Producing (Treating) the Recycled Water:	Inland Empire Utilities Agency (IEUA)
Name of Agency Operating the Recycled Water Distribution System:	Cucamonga Valley Water District (CVWD)
Supplemental Water Added in 2015	
Source of 2015 Supplemental Water	

Beneficial Use Type	General Description of 2015 Uses	Level of Treatment *Drop down list*	2015	2020	2025	2030	2035	2040 (opt)
Agricultural irrigation								
Landscape irrigation (excludes golf courses)		Tertiary	1,227	1,600	1,800	2,000	2,000	
Golf course irrigation								
Commercial use								
Industrial use								
Geothermal and other energy production								
Seawater intrusion barrier								
Recreational impoundment								
Wetlands or wildlife habitat								
Groundwater recharge (IPR)*								
Surface water augmentation (IPR)*								
Direct potable reuse								
Other *(Provide General Description)*								
		Total:	1,227	1,600	1,800	2,000	2,000	0

**IPR - Indirect Potable Reuse*

NOTES: 2015 usage includes Empire Lakes Golf Course which was 141 AF. Golf Course to close in 2016 and proposed mixed use development shall replace golf course.

Table 6-5 Retail: 2010 UWMP Recycled Water Use Projection Compared to 2015 Actual			
☐	Recycled water was not used in 2010 nor projected for use in 2015. The supplier will not complete the table below.		
Use Type		**2010 Projection for 2015**	**2015 Actual Use**
Agricultural irrigation			
Landscape irrigation (excludes golf courses)		1,800	1,227
Golf course irrigation			
Commercial use			
Industrial use			
Geothermal and other energy production			
Seawater intrusion barrier			
Recreational impoundment			
Wetlands or wildlife habitat			
Groundwater recharge (IPR)		3,000	3,176
Surface water augmentation (IPR)			
Direct potable reuse			
Other	*Type of Use*		
Total		4,800	4,403
NOTES: The 2010 UWMP did not separate the golf course usage. Actual golf course consumption for 2010 was 421 AF and 2015 is 141 AF			

Table 6-6 Retail: Methods to Expand Future Recycled Water Use			
☐	Supplier does not plan to expand recycled water use in the future. Supplier will not complete the table below but will provide narrative explanation.		
	Provide page location of narrative in UWMP		
Name of Action	Description	Planned Implementation Year	Expected Increase in Recycled Water Use
Add additional rows as needed			
New Connections	New connections at various sites	2020	200
New Connections	New connections at various sites	2025	200
New Connections	New connections at various sites	2030	200
		Total	600
NOTES:			

Table 6-7 Retail: Expected Future Water Supply Projects or Programs						
☐	No expected future water supply projects or programs that provide a quantifiable increase to the agency's water supply. Supplier will not complete the table below.					
☐	Some or all of the supplier's future water supply projects or programs are not compatible with this table and are described in a narrative format.					
	Provide page location of narrative in the UWMP					
Name of Future Projects or Programs	Joint Project with other agencies?		Description (if needed)	Planned Implementation Year	Planned for Use in Year Type *Drop Down List*	Expected Increase in Water Supply to Agency *This may be a range*
	Drop Down List (y/n)	*If Yes, Agency Name*				
Add additional rows as needed						
Well #48	No		New Well in Chino Basin	2016	Average Year	2,400
Well #49	No		New Well in Chino Basin	2017	Average Year	2,400
Well #50	No		New Well in Chino Basin	2018	Average Year	2,400
Well #51	No		New Well in Chino Basin	2019	Average Year	2,400
Well #52	No		New Well in Chino Basin	2025	Average Year	2,400
NOTES:						

Table 6-8 Retail: Water Supplies — Actual				
Water Supply	Additional Detail on Water Supply	2015		
Drop down list *May use each category multiple times. These are the only water supply categories that will be recognized by the WUEdata online submittal tool*		Actual Volume	Water Quality *Drop Down List*	Total Right or Safe Yield *(optional)*
Add additional rows as needed				
Purchased or Imported Water	MWD	13,195	Drinking Water	
Groundwater	Chino Basin	18,760	Drinking Water	
Groundwater	Cucamonga Basin	8,439	Drinking Water	
Surface water	Cucamonga Canyon	363	Raw Water	
Surface water	Deer Canyon	189	Raw Water	
Surface water	Day/East Canyon	498	Raw Water	
Recycled Water	IEUA	1,227	Recycled Water	
Transfers	Transferred from Fontana Water Company	8	Drinking Water	
	Total	42,678		0
NOTES:				

Table 6-9 Retail: Water Supplies — Projected

Water Supply	Additional Detail on Water Supply	Projected Water Supply *Report To the Extent Practicable*									
Drop down list *May use each category multiple times. These are the only water supply categories that will be recognized by the WUEdata online submittal tool*		**2020**		**2025**		**2030**		**2035**		**2040** *(opt)*	
		Reasonably Available Volume	Total Right or Safe Yield *(optional)*	Reasonably Available Volume	Total Right or Safe Yield *(optional)*	Reasonably Available Volume	Total Right or Safe Yield *(optional)*	Reasonably Available Volume	Total Right or Safe Yield *(optional)*	Reasonably Available Volume	Total Right or Safe Yield *(optional)*
Add additional rows as needed											
Purchased or Imported Water	Tier I	28,369		28,369		28,369		28,369			
Purchased or Imported Water	Tier II or Replenishment Water	3,236		4,704		6,932		1,509			
Groundwater	Chino Basin	12,755		13,687		13,859		19,282			
Groundwater	Cucamonga Basin	10,000		10,000		10,000		10,000			
Surface water	Cucamonga Canyon	1,000		1,000		1,000		1,000			
Surface water	Deer Canyon	140		140		140		140			
Surface water	Day/East Canyon	3,400		3,400		3,400		3,400			
Recycled Water	Direct Use	1,600		1,800		2,000		2,000			
	Total	60,500	0	63,100	0	65,700	0	65,700	0	0	0

NOTES: Total Project Supply during Normal Year. Imported Water above District's Tier I rate shall be either MWD replenishment water in the Chino Basin or Tier II imported water. Values shown do not include CVWD's stored groundwater in the Chino Basin.

Table 7-1 Retail: Basis of Water Year Data

Year Type	Base Year *If not using a calendar year, type in the last year of the fiscal, water year, or range of years, for example, water year 1999-2000, use 2000*	Available Supplies if Year Type Repeats	
		☐ Quantification of available supplies is not compatible with this table and is provided elsewhere in the UWMP. Location _____	
		☑ Quantification of available supplies is provided in this table as either volume only, percent only, or both.	
		Volume Available	**% of Average Supply**
Average Year	2008	57540	
Single-Dry Year	2009	54820	
Multiple-Dry Years 1st Year	2013	52548	
Multiple-Dry Years 2nd Year	2014	52246	
Multiple-Dry Years 3rd Year	2015	41436	
Multiple-Dry Years 4th Year *Optional*			
Multiple-Dry Years 5th Year *Optional*			
Multiple-Dry Years 6th Year *Optional*			

Agency may use multiple versions of Table 7-1 if different water sources have different base years and the supplier chooses to report the base years for each water source separately. If an agency uses multiple versions of Table 7-1, in the "Note" section of each table, state that multiple versions of Table 7-1 are being used and identify the particular water source that is being reported in each table.

NOTES:

Table 7-2 Retail: Normal Year Supply and Demand Comparison					
	2020	2025	2030	2035	2040 *(Opt)*
Supply totals *(autofill from Table 6-9)*	60,500	63,100	65,700	65,700	0
Demand totals *(autofill from Table 4-3)*	60,500	63,100	65,700	65,700	0
Difference	0	0	0	0	0
NOTES:					

Table 7-3 Retail: Single Dry Year Supply and Demand Comparison					
	2020	2025	2030	2035	2040 (Opt)
Supply totals	60,500	63,100	65,700	65,700	
Demand totals	60,500	63100	65,700	65,700	
Difference	0	0	0	0	0
NOTES: Difference from reduced canyon flows during a single dry year shall be made up from CVWD's stored groundwater from the Chino Basin and/or implimentation of water shortage contingency plan.					

Table 7-4 Retail: Multiple Dry Years Supply and Demand Comparison						
		2020	2025	2030	2035	2040 (Opt)
First year	Supply totals	60,500	63,100	65,700	65,700	
	Demand totals	60,500	63,100	65,700	65,700	
	Difference	0	0	0	0	0
Second year	Supply totals	60,500	63,100	65,700	65,700	
	Demand totals	60,500	63,100	65,700	65,700	
	Difference	0	0	0	0	0
Third year	Supply totals	60,500	63,100	65,700	65,700	
	Demand totals	60,500	63,100	65,700	65,700	
	Difference	0	0	0	0	0
Fourth year *(optional)*	Supply totals					
	Demand totals					
	Difference	0	0	0	0	0
Fifth year *(optional)*	Supply totals					
	Demand totals					
	Difference	0	0	0	0	0
Sixth year *(optional)*	Supply totals					
	Demand totals					
	Difference	0	0	0	0	0

NOTES: Difference from reduced canyon flows, imported water restrictions and State mandated water reductions during a multi-dry year shall be made up from CVWD's stored groundwater from the Chino Basin and/or implimentation of water shortage contingency plan.

Table 8-1 Retail **Stages of Water Shortage Contingency Plan**		
Stage	Complete Both	
	Percent Supply Reduction[1] *Numerical value as a percent*	Water Supply Condition (*Narrative description)*
Add additional rows as needed		
Stage 1		Water Use Efficiency 1. Hosing paved areas for health and safety purposes only using a water broom or water-efficient pressure washer using not more than five gallons per minute. 2. Wash vehicles using a hose equipped with a shutoff nozzle so that water does not flow to waste. 3. All decorative fountains shall be equipped with re-circulating systems. 4. Upon notification by the District, repair all leaks. 5. Adjust sprinklers so there is no runoff, overspray, or excessive irrigation from the property. 6. Restaurants will only serve water on request. 7. Hotels will offer guests the option to not launder linen daily. 8. Industrial customers will review their water-using processes to evaluate ways to increase water conservation. 9. Prohibition of watering outdoor landscapes during and within 48 hours after a measurable rainfall.
Stage 2	10%	Water Watch In addition to Stage 1 measures: 1. Requires customers to reduce water usage by 10% from a time period determined by the District. 2. Hours of watering are limited to 4 p.m. through 9 a.m.
Stage 3	15%	Water Alert In addition to Stage 2 measures: 1. Requires customers to reduce water usage by 15% from a time period determined by the District. 2. Limits may be applied to the number of days, frequency and duration of outdoor watering as determined by the District and enacted by Board resolution.
Stage 4	20%	Water Critical Water Alert In addition to Stage 3 measures: 1. Requires customers to reduce water usage by 20% from a time period determined by the District. 2. Limits may be applied to the number of days, frequency and duration of outdoor watering as determined by the District and enacted by Board resolution.

Table 8-1 Retail Stages of Water Shortage Contingency Plan		
Stage	Complete Both	
	Percent Supply Reduction[1] *Numerical value as a percent*	Water Supply Condition (*Narrative description)*
Add additional rows as needed		
Stage 5	25%	Water Emergency In addition to Stage 4 measures: 1. Requires customers to reduce water usage by 25% from a time period determined by the District. 2. Limits may be applied to the number of days, frequency and duration of outdoor watering as determined by the District and enacted by Board resolution.
Stage 6	35%	Water Severy Emergency In addition to Stage 5 measures: 1. Requires customers to reduce water usage by 35% as a result from a catastrophic event, such as earthquake, loss of imported water supply, other natural disaster or severe drought conditions. 2. Limits may be applied to the number of days, frequency and duration of outdoor watering as determined by the District and enacted by Board resolution. The following end-user prohibitions are also in effect: a) The irrigation with potable water on ornamental turf areas on public street medians. b) The irrigation with potable water of landscapes outside newly constructed homes and buildings in a manner inconsistent with regulations or other requirements established by the California Building Standards Commission.
Stage 7	50%	Water Crisis- Catastrophic In addition to Stage 6 measures: 1. Requires customers to reduce water usage by 50% as a result from a catastrophic event, such as earthquake, loss of imported water supply, other natural disaster or severe drought conditions. 2. All non-essential outdoor water may be prohibited as determined by the District and enacted by resolution. 3. The use of water for construction purposes shall be curtailed during a water emergency crisis with the exception that recycled water may be used for such purposes.
[1] *One stage in the Water Shortage Contingency Plan must address a water shortage of 50%.*		
NOTES:		

Table 8-2 Retail Only: Restrictions and Prohibitions on End Uses			
Stage	Restrictions and Prohibitions on End Users ***Drop down list*** *These are the only categories that will be accepted by the WUEdata online submittal tool*	Additional Explanation or Reference *(optional)*	Penalty, Charge, or Other Enforcement? *Drop Down List*
Add additional rows as needed			
1 to 7	Other - Prohibit use of potable water for washing hard surfaces	Hosing paved areas for health and safety purposes only using a water broom or water-efficient pressure washer using not more than five gallons per minute.	Yes
1 to 7	Other	Wash vehicles using a hose equipped with a shutoff nozzle so that water does not flow to waste.	Yes
1 to 7	Water Features - Restrict water use for decorative water features, such as fountains	All decorative fountains shall be equipped with re-circulating systems.	Yes
1 to 7	Other - Customers must repair leaks, breaks, and malfunctions in a timely manner	Upon notification by the District, repair all leaks.	Yes
1 to 7	Landscape - Restrict or prohibit runoff from landscape irrigation	Adjust sprinklers so there is no runoff, overspray, or excessive irrigation from the property.	Yes
1 to 7	CII - Restaurants may only serve water upon request	Restaurants will only serve water on request.	Yes
1 to 7	CII - Lodging establishment must offer opt out of linen service	Hotels will offer guests the option to not launder linen daily.	Yes
1 to 7	Other	Industrial customers will review their water-using processes to evaluate ways to increase water conservation.	Yes
1 to 7	Landscape - Other landscape restriction or prohibition	Prohibition of watering outdoor landscapes during and within 48 hours after a measurable rainfall.	Yes
2 to 7	Landscape - Limit landscape irrigation to specific days	Limits may be applied to the number of days, frequency and duration of outdoor watering as determined by the District and enacted by Board resolution.	Yes
6	Landscape - Prohibit certain types of landscape irrigation	Irrigation with potable water on ornamental turf areas on public street medians.	Yes

Table 8-2 Retail Only: Restrictions and Prohibitions on End Uses			
Stage	Restrictions and Prohibitions on End Users ***Drop down list*** *These are the only categories that will be accepted by the WUEdata online submittal tool*	Additional Explanation or Reference *(optional)*	Penalty, Charge, or Other Enforcement? *Drop Down List*
Add additional rows as needed			
6	Landscape - Prohibit certain types of landscape irrigation	Irrigation with potable water of landscapes outside newly constructed homes and buildings in a manner inconsistent with regulations or other requirements established by the California Building Standards Commission.	Yes
7	Landscape - Prohibit all landscape irrigation	All non-essential outdoor water may be prohibited as determined by the District and enacted by resolution.	Yes
7	Other - Prohibit use of potable water for construction and dust control	The use of water for construction purposes shall be curtailed during a water emergency crisis with the exception that recycled water may be used for such purposes.	Yes
NOTES:			

Table 8-4 Retail: Minimum Supply Next Three Years			
	2016	2017	2018
Available Water Supply	62,771	58,660	58,740
NOTES: Does not include CVWD's stored groundwater in the Chino Basin.			

Table 10-1 Retail: Notification to Cities and Counties		
City Name	60 Day Notice	Notice of Public Hearing
Add additional rows as needed		
City of Rancho Cucamonga	☑	☑
City of Fontana	☑	☑
City of Upland	☑	☑
City of Ontario	☑	☑
County Name *Drop Down List*	60 Day Notice	Notice of Public Hearing
Add additional rows as needed		
San Bernardino County	☑	☑
NOTES:		

APPENDIX H – 60 -DAY NOTIFICATION

Appendix H

60-Day Notification

Cucamonga Valley Water District

10440 Ashford Street, Rancho Cucamonga, CA 91730-2799
P.O. Box 638, Rancho Cucamonga, CA 91729-0638
(909) 987-2591 Fax (909) 476-8032

Martin E. Zvirbulis
Secretary / General Manager/CEO

March 21, 2016

SENT VIA FIRST CLASS MAIL AND E-MAIL (PKAVOUNAS@CBWM.ORG)

Mr. Peter Kavounas
General Manager
Chino Basin Watermaster
9641 San Bernardino Road
Rancho Cucamonga, CA 91730

Subject: Cucamonga Valley Water District 2015 Urban Water Management Plan Update; Notice of Review and Changes

Dear Mr. Peter Kavounas

The Cucamonga Valley Water District (District) is currently involved in an effort and process to review, update, and prepare its 2015 Urban Water Management Plan (2015 UWMP) in accordance with the California Urban Water Management Planning Act, the Water Conservation Act of 2009, and other applicable laws.

The District is required to update its UWMP every five years. Among other information and analyses, the 2015 UWMP will evaluate current and projected water supplies and demands within the District's service area during normal, single-dry, and multiple-dry year periods over the next 20-year planning horizon and beyond. The 2015 UWMP will also include information regarding water conservation efforts and water shortage contingency planning.

The District is providing this notice to Chino Basin Watermaster pursuant to Water Code section 10621(b). The District is encouraging local agencies, the public, and other interested parties to participate in the development of the 2015 UWMP, and we invite your agency to meet with us to review various elements of the 2015 UWMP, including population projections, water supplies and demands, and current and upcoming water conservation programs.

A copy of the draft 2015 UWMP is currently scheduled to be available for public review and comment by May 31, 2016 and will be available at the District's offices at the address set forth below. The District will also hold a public hearing on the 2015 UWMP, which is currently estimated to take place on June 14, 2016 at the following address:

James V. Curatalo, Jr. President | **Luis Cetina** Vice President | **Oscar Gonzalez** Director | **Randall Reed** Director | **Kathleen J. Tiegs** Director

Public Hearing Location: Cucamonga Valley Water District
10440 Ashford Street
Rancho Cucamonga, CA 91730-2799

Additional notice regarding the time and place of the public hearing will be published in accordance with Government Code section 6066. Public input and coordination with the Chino Basin Watermaster and other local agencies is strongly encouraged and will be considered throughout the process of preparing and completing the 2015 UWMP. (See, e.g., Water Code §§ 10620(d)(2); 10621(b); 10642.) After the draft 2015 UWMP is made available for public review, please provide any written comments to the address below no later than June 13, 2016.

Send Comments To: Cucamonga Valley Water District
10440 Ashford Street
Rancho Cucamonga, CA 91730-2799
Attn: Braden Yu

Thank you for your cooperation and involvement with regard to the District's 2015 UWMP update process. The UWMP is being prepared by Civiltec Engineering, Inc. Should you have any questions or concerns, please feel free to contact Greg Ripperger at (626) 357-0588 or gripperger@civiltec.com

Sincerely,

Martin E. Zvirbulis
General Manager / CEO

Cucamonga Valley Water District

10440 Ashford Street, Rancho Cucamonga, CA 91730-2799
P.O. Box 638, Rancho Cucamonga, CA 91729-0638
(909) 987-2591 Fax (909) 476-8032

Martin E. Zvirbulis
Secretary / General Manager/CEO

March 21, 2016

SENT VIA FIRST CLASS MAIL AND E-MAIL (CHAYS@FONTANA.ORG)

Mr. Chuck Hays
Public Works Director
City of Fontana
16489 Orange
Fontana, California 92335

Subject: Cucamonga Valley Water District 2015 Urban Water Management Plan Update; Notice of Review and Changes

Dear Mr. Chuck Hays,

The Cucamonga Valley Water District (District) is currently involved in an effort and process to review, update, and prepare its 2015 Urban Water Management Plan (2015 UWMP) in accordance with the California Urban Water Management Planning Act, the Water Conservation Act of 2009, and other applicable laws.

The District is required to update its UWMP every five years. Among other information and analyses, the 2015 UWMP will evaluate current and projected water supplies and demands within the District's service area during normal, single-dry, and multiple-dry year periods over the next 20-year planning horizon and beyond. The 2015 UWMP will also include information regarding water conservation efforts and water shortage contingency planning.

The District is providing this notice to the City of Fontana pursuant to Water Code section 10621(b). The District is encouraging local agencies, the public, and other interested parties to participate in the development of the 2015 UWMP, and we invite your agency to meet with us to review various elements of the 2015 UWMP, including population projections, water supplies and demands, and current and upcoming water conservation programs.

A copy of the draft 2015 UWMP is currently scheduled to be available for public review and comment by May 31, 2016 and will be available at the District's offices at the address set forth below. The District will also hold a public hearing on the 2015 UWMP, which is currently estimated to take place on June 14, 2016 at the following address:

James V. Curatalo, Jr. President | **Luis Cetina** Vice President | **Oscar Gonzalez** Director | **Randall Reed** Director | **Kathleen J. Tiegs** Director

Public Hearing Location: Cucamonga Valley Water District
10440 Ashford Street
Rancho Cucamonga, CA 91730-2799

Additional notice regarding the time and place of the public hearing will be published in accordance with Government Code section 6066. Public input and coordination with the City of Fontana and other local agencies is strongly encouraged and will be considered throughout the process of preparing and completing the 2015 UWMP. (See, e.g., Water Code §§ 10620(d)(2); 10621(b); 10642.) After the draft 2015 UWMP is made available for public review, please provide any written comments to the address below no later than June 13, 2016.

Send Comments To: Cucamonga Valley Water District
10440 Ashford Street
Rancho Cucamonga, CA 91730-2799
Attn: Braden Yu

Thank you for your cooperation and involvement with regard to the District's 2015 UWMP update process. The UWMP is being prepared by Civiltec Engineering, Inc. Should you have any questions or concerns, please feel free to contact Greg Ripperger at (626) 357-0588 or gripperger@civiltec.com

Sincerely,

Martin E. Zvirbulis
General Manager / CEO

Cucamonga Valley Water District

10440 Ashford Street, Rancho Cucamonga, CA 91730-2799
P.O. Box 638, Rancho Cucamonga, CA 91729-0638
(909) 987-2591 Fax (909) 476-8032

Martin E. Zvirbulis
Secretary / General Manager/CEO

March 21, 2016

SENT VIA FIRST CLASS MAIL AND E-MAIL (JMSWIFT@FONTANAWATER.COM)

Mr. Josh M. Swift
General Manager
Fontana Water Company
15966 Arrow Route
Fontana, CA 92335

Subject: Cucamonga Valley Water District 2015 Urban Water Management Plan Update; Notice of Review and Changes

Dear Mr. Josh M. Swift,

The Cucamonga Valley Water District (District) is currently involved in an effort and process to review, update, and prepare its 2015 Urban Water Management Plan (2015 UWMP) in accordance with the California Urban Water Management Planning Act, the Water Conservation Act of 2009, and other applicable laws.

The District is required to update its UWMP every five years. Among other information and analyses, the 2015 UWMP will evaluate current and projected water supplies and demands within the District's service area during normal, single-dry, and multiple-dry year periods over the next 20-year planning horizon and beyond. The 2015 UWMP will also include information regarding water conservation efforts and water shortage contingency planning.

The District is providing this notice to Fontana Water Company pursuant to Water Code section 10621(b). The District is encouraging local agencies, the public, and other interested parties to participate in the development of the 2015 UWMP, and we invite your agency to meet with us to review various elements of the 2015 UWMP, including population projections, water supplies and demands, and current and upcoming water conservation programs.

A copy of the draft 2015 UWMP is currently scheduled to be available for public review and comment by May 31, 2016 and will be available at the District's offices at the address set forth below. The District will also hold a public hearing on the 2015 UWMP, which is currently estimated to take place on June 14, 2016 at the following address:

James V. Curatalo, Jr. President | **Luis Cetina** Vice President | **Oscar Gonzalez** Director | **Randall Reed** Director | **Kathleen J. Tiegs** Director

Public Hearing Location: Cucamonga Valley Water District
10440 Ashford Street
Rancho Cucamonga, CA 91730-2799

Additional notice regarding the time and place of the public hearing will be published in accordance with Government Code section 6066. Public input and coordination with the Fontana Water Company and other local agencies is strongly encouraged and will be considered throughout the process of preparing and completing the 2015 UWMP. (See, e.g., Water Code §§ 10620(d)(2); 10621(b); 10642.) After the draft 2015 UWMP is made available for public review, please provide any written comments to the address below no later than June 13, 2016.

Send Comments To: Cucamonga Valley Water District
10440 Ashford Street
Rancho Cucamonga, CA 91730-2799
Attn: Braden Yu

Thank you for your cooperation and involvement with regard to the District's 2015 UWMP update process. The UWMP is being prepared by Civiltec Engineering, Inc. Should you have any questions or concerns, please feel free to contact Greg Ripperger at (626) 357-0588 or gripperger@civiltec.com

Sincerely,

Martin E. Zvirbulis
General Manager / CEO

Cucamonga Valley Water District

10440 Ashford Street, Rancho Cucamonga, CA 91730-2799
P.O. Box 638, Rancho Cucamonga, CA 91729-0638
(909) 987-2591 Fax (909) 476-8032

Martin E. Zvirbulis
Secretary / General Manager/CEO

March 21, 2016

SENT VIA FIRST CLASS MAIL AND E-MAIL (JGRINDSTAFF@IEUA.ORG)

Mr. Joseph Grindstaff
General Manager
Inland Empire Utilities Agency
6075 Kimball Avenue
Chino, CA 91708

Subject: Cucamonga Valley Water District 2015 Urban Water Management Plan Update; Notice of Review and Changes

Dear Mr. Joseph Grindstaff,

The Cucamonga Valley Water District (District) is currently involved in an effort and process to review, update, and prepare its 2015 Urban Water Management Plan (2015 UWMP) in accordance with the California Urban Water Management Planning Act, the Water Conservation Act of 2009, and other applicable laws.

The District is required to update its UWMP every five years. Among other information and analyses, the 2015 UWMP will evaluate current and projected water supplies and demands within the District's service area during normal, single-dry, and multiple-dry year periods over the next 20-year planning horizon and beyond. The 2015 UWMP will also include information regarding water conservation efforts and water shortage contingency planning.

The District is providing this notice to Inland Empire Utilities Agency pursuant to Water Code section 10621(b). The District is encouraging local agencies, the public, and other interested parties to participate in the development of the 2015 UWMP, and we invite your agency to meet with us to review various elements of the 2015 UWMP, including population projections, water supplies and demands, and current and upcoming water conservation programs.

A copy of the draft 2015 UWMP is currently scheduled to be available for public review and comment by May 31, 2016 and will be available at the District's offices at the address set forth below. The District will also hold a public hearing on the 2015 UWMP, which is currently estimated to take place on June 14, 2016 at the following address:

James V. Curatalo, Jr. President | **Luis Cetina** Vice President | **Oscar Gonzalez** Director | **Randall Reed** Director | **Kathleen J. Tiegs** Director

Public Hearing Location: Cucamonga Valley Water District
10440 Ashford Street
Rancho Cucamonga, CA 91730-2799

Additional notice regarding the time and place of the public hearing will be published in accordance with Government Code section 6066. Public input and coordination with the Inland Empire Utilities Agency and other local agencies is strongly encouraged and will be considered throughout the process of preparing and completing the 2015 UWMP. (See, e.g., Water Code §§ 10620(d)(2); 10621(b); 10642.) After the draft 2015 UWMP is made available for public review, please provide any written comments to the address below no later than June 13, 2016.

Send Comments To: Cucamonga Valley Water District
10440 Ashford Street
Rancho Cucamonga, CA 91730-2799
Attn: Braden Yu

Thank you for your cooperation and involvement with regard to the District's 2015 UWMP update process. The UWMP is being prepared by Civiltec Engineering, Inc. Should you have any questions or concerns, please feel free to contact Greg Ripperger at (626) 357-0588 or gripperger@civiltec.com

Sincerely,

Martin E. Zvirbulis
General Manager / CEO

Cucamonga Valley Water District

10440 Ashford Street, Rancho Cucamonga, CA 91730-2799
P.O. Box 638, Rancho Cucamonga, CA 91729-0638
(909) 987-2591 Fax (909) 476-8032

Martin E. Zvirbulis
Secretary / General Manager/CEO

March 21, 2016

SENT VIA FIRST CLASS MAIL AND E-MAIL (SBURTON@CI.ONTARIO.CA.US)

Mr. Scott Burton
Utilities General Manager
City of Ontario
1425 South Bon View Avenue
Ontario, California 91761

Subject: Cucamonga Valley Water District 2015 Urban Water Management Plan Update; Notice of Review and Changes

Dear Mr. Scott Burton,

The Cucamonga Valley Water District (District) is currently involved in an effort and process to review, update, and prepare its 2015 Urban Water Management Plan (2015 UWMP) in accordance with the California Urban Water Management Planning Act, the Water Conservation Act of 2009, and other applicable laws.

The District is required to update its UWMP every five years. Among other information and analyses, the 2015 UWMP will evaluate current and projected water supplies and demands within the District's service area during normal, single-dry, and multiple-dry year periods over the next 20-year planning horizon and beyond. The 2015 UWMP will also include information regarding water conservation efforts and water shortage contingency planning.

The District is providing this notice to the City of Ontario pursuant to Water Code section 10621(b). The District is encouraging local agencies, the public, and other interested parties to participate in the development of the 2015 UWMP, and we invite your agency to meet with us to review various elements of the 2015 UWMP, including population projections, water supplies and demands, and current and upcoming water conservation programs.

A copy of the draft 2015 UWMP is currently scheduled to be available for public review and comment by May 31, 2016 and will be available at the District's offices at the address set forth below. The District will also hold a public hearing on the 2015 UWMP, which is currently estimated to take place on June 14, 2016 at the following address:

James V. Curatalo, Jr. President | **Luis Cetina** Vice President | **Oscar Gonzalez** Director | **Randall Reed** Director | **Kathleen J. Tiegs** Director

Public Hearing Location: Cucamonga Valley Water District
10440 Ashford Street
Rancho Cucamonga, CA 91730-2799

Additional notice regarding the time and place of the public hearing will be published in accordance with Government Code section 6066. Public input and coordination with the City of Ontario and other local agencies is strongly encouraged and will be considered throughout the process of preparing and completing the 2015 UWMP. (See, e.g., Water Code §§ 10620(d)(2); 10621(b); 10642.) After the draft 2015 UWMP is made available for public review, please provide any written comments to the address below no later than June 13, 2016.

Send Comments To: Cucamonga Valley Water District
10440 Ashford Street
Rancho Cucamonga, CA 91730-2799
Attn: Braden Yu

Thank you for your cooperation and involvement with regard to the District's 2015 UWMP update process. The UWMP is being prepared by Civiltec Engineering, Inc. Should you have any questions or concerns, please feel free to contact Greg Ripperger at (626) 357-0588 or gripperger@civiltec.com

Sincerely,

Martin E. Zvirbulis
General Manager / CEO

Cucamonga Valley Water District

10440 Ashford Street, Rancho Cucamonga, CA 91730-2799
P.O. Box 638, Rancho Cucamonga, CA 91729-0638
(909) 987-2591 Fax (909) 476-8032

Martin E. Zvirbulis
Secretary / General Manager/CEO

March 21, 2016

SENT VIA FIRST CLASS MAIL AND E-MAIL (WILLIAM.WITTKOPF@CITYOFRC.US)

Mr. William Wittkopf
Public Works Services Director
City of Rancho Cucamonga
8794 Lion Street
Rancho Cucamonga, CA 91730

Subject: Cucamonga Valley Water District 2015 Urban Water Management Plan Update; Notice of Review and Changes

Dear Mr. William Wittkopf,

The Cucamonga Valley Water District (District) is currently involved in an effort and process to review, update, and prepare its 2015 Urban Water Management Plan (2015 UWMP) in accordance with the California Urban Water Management Planning Act, the Water Conservation Act of 2009, and other applicable laws.

The District is required to update its UWMP every five years. Among other information and analyses, the 2015 UWMP will evaluate current and projected water supplies and demands within the District's service area during normal, single-dry, and multiple-dry year periods over the next 20-year planning horizon and beyond. The 2015 UWMP will also include information regarding water conservation efforts and water shortage contingency planning.

The District is providing this notice to the City of Rancho Cucamonga pursuant to Water Code section 10621(b). The District is encouraging local agencies, the public, and other interested parties to participate in the development of the 2015 UWMP, and we invite your agency to meet with us to review various elements of the 2015 UWMP, including population projections, water supplies and demands, and current and upcoming water conservation programs.

A copy of the draft 2015 UWMP is currently scheduled to be available for public review and comment by May 31, 2016 and will be available at the District's offices at the address set forth below. The District will also hold a public hearing on the 2015 UWMP, which is currently estimated to take place on June 14, 2016 at the following address:

James V. Curatalo, Jr. President | **Luis Cetina** Vice President | **Oscar Gonzalez** Director | **Randall Reed** Director | **Kathleen J. Tiegs** Director

Public Hearing Location: Cucamonga Valley Water District
10440 Ashford Street
Rancho Cucamonga, CA 91730-2799

Additional notice regarding the time and place of the public hearing will be published in accordance with Government Code section 6066. Public input and coordination with the City of Rancho Cucamonga and other local agencies is strongly encouraged and will be considered throughout the process of preparing and completing the 2015 UWMP. (See, e.g., Water Code §§ 10620(d)(2); 10621(b); 10642.) After the draft 2015 UWMP is made available for public review, please provide any written comments to the address below no later than June 13, 2016.

Send Comments To: Cucamonga Valley Water District
10440 Ashford Street
Rancho Cucamonga, CA 91730-2799
Attn: Braden Yu

Thank you for your cooperation and involvement with regard to the District's 2015 UWMP update process. The UWMP is being prepared by Civiltec Engineering, Inc. Should you have any questions or concerns, please feel free to contact Greg Ripperger at (626) 357-0588 or gripperger@civiltec.com

Sincerely,

Martin E. Zvirbulis
General Manager / CEO

Cucamonga Valley Water District

10440 Ashford Street, Rancho Cucamonga, CA 91730-2799
P.O. Box 638, Rancho Cucamonga, CA 91729-0638
(909) 987-2591 Fax (909) 476-8032

Martin E. Zvirbulis
Secretary / General Manager/CEO

March 21, 2016

SENT VIA FIRST CLASS MAIL AND E-MAIL (CMOORREES@SAWATERCO.COM)

Mr. Charles Moorrees
General Manager
San Antonio Water Company
139 N. Euclid Avenue
Upland, CA 91786-6036

Subject: Cucamonga Valley Water District 2015 Urban Water Management Plan Update; Notice of Review and Changes

Dear Mr. Charles Moorrees,

The Cucamonga Valley Water District (District) is currently involved in an effort and process to review, update, and prepare its 2015 Urban Water Management Plan (2015 UWMP) in accordance with the California Urban Water Management Planning Act, the Water Conservation Act of 2009, and other applicable laws.

The District is required to update its UWMP every five years. Among other information and analyses, the 2015 UWMP will evaluate current and projected water supplies and demands within the District's service area during normal, single-dry, and multiple-dry year periods over the next 20-year planning horizon and beyond. The 2015 UWMP will also include information regarding water conservation efforts and water shortage contingency planning.

The District is providing this notice to San Antonio Water Company pursuant to Water Code section 10621(b). The District is encouraging local agencies, the public, and other interested parties to participate in the development of the 2015 UWMP, and we invite your agency to meet with us to review various elements of the 2015 UWMP, including population projections, water supplies and demands, and current and upcoming water conservation programs.

A copy of the draft 2015 UWMP is currently scheduled to be available for public review and comment by May 31, 2016 and will be available at the District's offices at the address set forth below. The District will also hold a public hearing on the 2015 UWMP, which is currently estimated to take place on June 14, 2016 at the following address:

James V. Curatalo, Jr. President | **Luis Cetina** Vice President | **Oscar Gonzalez** Director | **Randall Reed** Director | **Kathleen J. Tiegs** Director

Public Hearing Location: Cucamonga Valley Water District
10440 Ashford Street
Rancho Cucamonga, CA 91730-2799

Additional notice regarding the time and place of the public hearing will be published in accordance with Government Code section 6066. Public input and coordination with the San Antonio Water Company and other local agencies is strongly encouraged and will be considered throughout the process of preparing and completing the 2015 UWMP. (See, e.g., Water Code §§ 10620(d)(2); 10621(b); 10642.) After the draft 2015 UWMP is made available for public review, please provide any written comments to the address below no later than June 13, 2016.

Send Comments To: Cucamonga Valley Water District
10440 Ashford Street
Rancho Cucamonga, CA 91730-2799
Attn: Braden Yu

Thank you for your cooperation and involvement with regard to the District's 2015 UWMP update process. The UWMP is being prepared by Civiltec Engineering, Inc. Should you have any questions or concerns, please feel free to contact Greg Ripperger at (626) 357-0588 or gripperger@civiltec.com

Sincerely,

Martin E. Zvirbulis
General Manager / CEO

Cucamonga Valley Water District

10440 Ashford Street, Rancho Cucamonga, CA 91730-2799
P.O. Box 638, Rancho Cucamonga, CA 91729-0638
(909) 987-2591 Fax (909) 476-8032

Martin E. Zvirbulis
Secretary / General Manager/CEO

March 21, 2016

SENT VIA FIRST CLASS MAIL AND E-MAIL (GNEWCOMBE@DPW.SBCOUNTY.GOV)

Mr. Gerry Newcombe
Director of Public Works
County of San Bernardino
825 East Third Street
San Bernardino, CA 92415

Subject: Cucamonga Valley Water District 2015 Urban Water Management Plan Update; Notice of Review and Changes

Dear Mr. Gerry Newcombe,

The Cucamonga Valley Water District (District) is currently involved in an effort and process to review, update, and prepare its 2015 Urban Water Management Plan (2015 UWMP) in accordance with the California Urban Water Management Planning Act, the Water Conservation Act of 2009, and other applicable laws.

The District is required to update its UWMP every five years. Among other information and analyses, the 2015 UWMP will evaluate current and projected water supplies and demands within the District's service area during normal, single-dry, and multiple-dry year periods over the next 20-year planning horizon and beyond. The 2015 UWMP will also include information regarding water conservation efforts and water shortage contingency planning.

The District is providing this notice to the County of San Bernardino pursuant to Water Code section 10621(b). The District is encouraging local agencies, the public, and other interested parties to participate in the development of the 2015 UWMP, and we invite your agency to meet with us to review various elements of the 2015 UWMP, including population projections, water supplies and demands, and current and upcoming water conservation programs.

A copy of the draft 2015 UWMP is currently scheduled to be available for public review and comment by May 31, 2016 and will be available at the District's offices at the address set forth below. The District will also hold a public hearing on the 2015 UWMP, which is currently estimated to take place on June 14, 2016 at the following address:

James V. Curatalo, Jr. President | **Luis Cetina** Vice President | **Oscar Gonzalez** Director | **Randall Reed** Director | **Kathleen J. Tiegs** Director

Public Hearing Location: Cucamonga Valley Water District
10440 Ashford Street
Rancho Cucamonga, CA 91730-2799

Additional notice regarding the time and place of the public hearing will be published in accordance with Government Code section 6066. Public input and coordination with the County of San Bernardino and other local agencies is strongly encouraged and will be considered throughout the process of preparing and completing the 2015 UWMP. (See, e.g., Water Code §§ 10620(d)(2); 10621(b); 10642.) After the draft 2015 UWMP is made available for public review, please provide any written comments to the address below no later than June 13, 2016.

Send Comments To: Cucamonga Valley Water District
10440 Ashford Street
Rancho Cucamonga, CA 91730-2799
Attn: Braden Yu

Thank you for your cooperation and involvement with regard to the District's 2015 UWMP update process. The UWMP is being prepared by Civiltec Engineering, Inc. Should you have any questions or concerns, please feel free to contact Greg Ripperger at (626) 357-0588 or gripperger@civiltec.com

Sincerely,

Martin E. Zvirbulis
General Manager / CEO

Cucamonga Valley Water District

10440 Ashford Street, Rancho Cucamonga, CA 91730-2799
P.O. Box 638, Rancho Cucamonga, CA 91729-0638
(909) 987-2591 Fax (909) 476-8032

Martin E. Zvirbulis
Secretary / General Manager/CEO

March 21, 2016

SENT VIA FIRST CLASS MAIL AND E-MAIL (DANIELF@SMWD.COM)

Mr. Daniel R. Ferons
General Manager
Santa Margarita Water District
26111 Antonio Parkway
Rancho Santa Margarita, CA 92688

Subject: Cucamonga Valley Water District 2015 Urban Water Management Plan Update; Notice of Review and Changes

Dear Mr. Daniel Ferons,

The Cucamonga Valley Water District (District) is currently involved in an effort and process to review, update, and prepare its 2015 Urban Water Management Plan (2015 UWMP) in accordance with the California Urban Water Management Planning Act, the Water Conservation Act of 2009, and other applicable laws.

The District is required to update its UWMP every five years. Among other information and analyses, the 2015 UWMP will evaluate current and projected water supplies and demands within the District's service area during normal, single-dry, and multiple-dry year periods over the next 20-year planning horizon and beyond. The 2015 UWMP will also include information regarding water conservation efforts and water shortage contingency planning.

The District is providing this notice to Santa Margarita Water District pursuant to Water Code section 10621(b). The District is encouraging local agencies, the public, and other interested parties to participate in the development of the 2015 UWMP, and we invite your agency to meet with us to review various elements of the 2015 UWMP, including population projections, water supplies and demands, and current and upcoming water conservation programs.

A copy of the draft 2015 UWMP is currently scheduled to be available for public review and comment by May 31, 2016 and will be available at the District's offices at the address set forth below. The District will also hold a public hearing on the 2015 UWMP, which is currently estimated to take place on June 14, 2016 at the following address:

James V. Curatalo, Jr. President | **Luis Cetina** Vice President | **Oscar Gonzalez** Director | **Randall Reed** Director | **Kathleen J. Tiegs** Director

Public Hearing Location: Cucamonga Valley Water District
10440 Ashford Street
Rancho Cucamonga, CA 91730-2799

Additional notice regarding the time and place of the public hearing will be published in accordance with Government Code section 6066. Public input and coordination with the Santa Margarita Water District and other local agencies is strongly encouraged and will be considered throughout the process of preparing and completing the 2015 UWMP. (See, e.g., Water Code §§ 10620(d)(2); 10621(b); 10642.) After the draft 2015 UWMP is made available for public review, please provide any written comments to the address below no later than June 13, 2016.

Send Comments To: Cucamonga Valley Water District
10440 Ashford Street
Rancho Cucamonga, CA 91730-2799
Attn: Braden Yu

Thank you for your cooperation and involvement with regard to the District's 2015 UWMP update process. The UWMP is being prepared by Civiltec Engineering, Inc. Should you have any questions or concerns, please feel free to contact Greg Ripperger at (626) 357-0588 or gripperger@civiltec.com

Sincerely,

Martin E. Zvirbulis
General Manager / CEO

Cucamonga Valley Water District

10440 Ashford Street, Rancho Cucamonga, CA 91730-2799
P.O. Box 638, Rancho Cucamonga, CA 91729-0638
(909) 987-2591 Fax (909) 476-8032

Martin E. Zvirbulis
Secretary / General Manager/CEO

March 21, 2016

SENT VIA FIRST CLASS MAIL AND E-MAIL (RHOERNING@CI.UPLAND.CA.US)

Ms. Rosemary Hoerning
Public Works Director / City Engineer
City of Upland
460 N. Euclid Avenue
Upland, California 91786

Subject: Cucamonga Valley Water District 2015 Urban Water Management Plan Update; Notice of Review and Changes

Dear Ms. Rosemary Hoerning,

The Cucamonga Valley Water District (District) is currently involved in an effort and process to review, update, and prepare its 2015 Urban Water Management Plan (2015 UWMP) in accordance with the California Urban Water Management Planning Act, the Water Conservation Act of 2009, and other applicable laws.

The District is required to update its UWMP every five years. Among other information and analyses, the 2015 UWMP will evaluate current and projected water supplies and demands within the District's service area during normal, single-dry, and multiple-dry year periods over the next 20-year planning horizon and beyond. The 2015 UWMP will also include information regarding water conservation efforts and water shortage contingency planning.

The District is providing this notice to the City of Upland pursuant to Water Code section 10621(b). The District is encouraging local agencies, the public, and other interested parties to participate in the development of the 2015 UWMP, and we invite your agency to meet with us to review various elements of the 2015 UWMP, including population projections, water supplies and demands, and current and upcoming water conservation programs.

A copy of the draft 2015 UWMP is currently scheduled to be available for public review and comment by May 31, 2016 and will be available at the District's offices at the address set forth below. The District will also hold a public hearing on the 2015 UWMP, which is currently estimated to take place on June 14, 2016 at the following address:

James V. Curatalo, Jr. President | **Luis Cetina** Vice President | **Oscar Gonzalez** Director | **Randall Reed** Director | **Kathleen J. Tiegs** Director

Public Hearing Location: Cucamonga Valley Water District
10440 Ashford Street
Rancho Cucamonga, CA 91730-2799

Additional notice regarding the time and place of the public hearing will be published in accordance with Government Code section 6066. Public input and coordination with the City of Upland and other local agencies is strongly encouraged and will be considered throughout the process of preparing and completing the 2015 UWMP. (See, e.g., Water Code §§ 10620(d)(2); 10621(b); 10642.) After the draft 2015 UWMP is made available for public review, please provide any written comments to the address below no later than June 13, 2016.

Send Comments To: Cucamonga Valley Water District
10440 Ashford Street
Rancho Cucamonga, CA 91730-2799
Attn: Braden Yu

Thank you for your cooperation and involvement with regard to the District's 2015 UWMP update process. The UWMP is being prepared by Civiltec Engineering, Inc. Should you have any questions or concerns, please feel free to contact Greg Ripperger at (626) 357-0588 or gripperger@civiltec.com

Sincerely,

Martin E. Zvirbulis
General Manager / CEO

APPENDIX I – PUBLIC NOTIFICATION DOCUMENTS

Appendix I

Public Notification Documents

Inland Valley Daily Bulletin
(formerly The Daily Report)
9616 Archibald Avenue, Suite 100
Rancho Cucamonga, CA 91730
909-987-6397
legals@inlandnewspapers.com

(Space below for use of County Clerk Only)

PROOF OF PUBLICATION
(2015.5 C.C.P.)

STATE OF CALIFORNIA
County of San Bernardino

I am a citizen of the United States, I am over the age of eighteen years, and not a party to or interested in the above-entitled matter. I am the principal clerk of the printer of INLAND VALLEY DAILY BULLETIN, a newspaper of general circulation printed and published daily in the City of Ontario, County of San Bernardino, and which newspaper has been adjudged a newspaper of general circulation by the Superior Court of the County of San Bernardino, State of California, on the date of August 24, 1951, Case Number 70663. The notice, of which the annexed is a true printed copy, has been published in each regular and entire issue of said newspaper and not in any supplement thereof on the following dates, to wit:

5/31, 6/14/2016

I declare under the penalty of perjury that the foregoing is true and correct.

Executed at Rancho Cucamonga, San Bernardino Co. California

On this 14 day of June, 2016.

KC

Signature

Legal Notice | Legal Notice

EXHIBIT A
NOTICE OF PUBLIC HEARING

NOTICE OF PUBLIC HEARING FOR THE ADOPTION OF THE 2015 URBAN WATER MANAGEMENT PLAN

NOTICE IS HEREBY GIVEN that on June 14, 2016 at 6:00 p.m. in the meeting room of the Board of Directors of the Cucamonga Valley Water District, 10440 Ashford Street, Rancho Cucamonga, California, the Board of Directors will conduct a public hearing to consider the adoption of the 2015 Urban Water Management Plan.

NOTICE IS FURTHER GIVEN that a copy of the Draft Year 2015 Urban Water Management Plan will be available for public review on May 31, 2016 Monday through Friday from 7:30 a.m. – 5:30 p.m. at the Agency's Administrative Office located at 10440 Ashford Street, Rancho Cucamonga.

Summary of Urban Water Management Plan

Cucamonga Valley Water District has developed a 2015 Urban Water Management Plan which complies with the requirements set forth by the California Urban Water Management Planning Act (Act), Water Code Sections 10610 through 10657.

Date: May 24, 2016

CUCAMONGA VALLEY WATER DISTRICT

Published: 5/31, 6/14/2016 #808350

MINUTES OF A REGULAR MEETING
of the
CUCAMONGA VALLEY WATER DISTRICT
BOARD OF DIRECTORS

June 14, 2016

~

CALL TO ORDER
6:00 p.m.

A regular meeting of the Cucamonga Valley Water District Board of Directors was called to order at 6:00 p.m. by President Curatalo. President Curatalo led the Pledge of Allegiance following a brief Flag Day tribute.

In Attendance:

Board
James V. Curatalo, Jr., President
Luis Cetina, Vice President
Oscar Gonzalez, Director
Randall J. Reed, Director
Kathleen J. Tiegs, Director

Staff
Martin Zvirbulis, General Manager/CEO
Jeff Ferre, BB&K, Legal Counsel

Agnes Boros, Accounting Supervisor
John Bosler, Assistant General Manager/COO
Chad Brantley, Finance Manager
Frank Chu, Information Technology Manager
Cindy Cisneros, Executive Assistant, General Manager/CEO
Carrie Corder, Assistant General Manager/CFO
Eduardo Espinosa, Design & Construction Manager
Kristeen Farlow, Communications & Outreach Manager
Joanna Gonzalez, Temp. Community Outreach Representative
Rob Hills, Water Treatment Plant Manager
Robert Kalarsarinis, Customer Service Manager
Praseetha Krishnan, Assistant Engineer
Gidti Ludesirishoti, Associate Engineer
Jo Lynne Russo-Pereyra, Assistant General Manager
Tuan Truong, Associate Engineer
Taya Victorino, Executive Assistant, Board of Directors
Braden Yu, Planning & Development Manager

Guests
Carmen Gonzalez, Customer
Tom Mitchell, Assistant Principal, Los Osos High School
Nathaniel Thomas, WEWAC Water Scholar Program Winner
Suzie Thomas

ADDITIONS/DELETIONS TO THE AGENDA

ADDITIONS/
DELETIONS

None.

PUBLIC COMMENT

PUBLIC COMMENT

None.

PRESENTATIONS

A) 2016 WEWAC Water Scholar Program Winner, Nathanial Thomas

Ms. Kristeen Farlow gave a presentation on the 2016 WEWAC Water Scholar Program, one of several programs offered through WEWAC with the goal of inspiring water awareness. As an essay winner, Mr. Nathanial Thomas, a student from our service area, received a $500 scholarship to Washington State University. Ms. Farlow recognized Mr. Tom Mitchell who attended in support of Mr. Thomas.

The Board presented a certificate of recognition to Mr. Thomas and congratulated him on his accomplishment. They collectively thanked Mr. Mitchell and Los Osos High School for their continued partnership in the community.

GENERAL MANAGER/CEO REPORTS

GENERAL MANAGER/CEO COMMUNICATIONS

B) Miscellaneous Updates

Martin Zvirbulis, General Manager/CEO, reported the following:

- A copy of the Board Tracking Log has been provided at the dais. Moving forward a copy will continue to be placed at the dais to keep the Board informed of the requests they have made and their status.
- Also at the dais are two postcards that were mailed to our customers. One postcard informs them of the Meter Upgrade Project currently taking place and advises that they may see the project vendors at their meter box. The second postcard notifies customers that the annual Water Quality report is available for them to view on our website.
- As a thank you for our water and wastewater crews' exceptional customer service in coordinating service lines to the Cucamonga Service Station, the Route 66 Inland Empire has recognized CVWD as a community partner and sponsor of the Route 66 Classic Car Show. The car show takes place on June 25, 2016 and our logo has been included on their event posters and car show calendars which will be given to all attendees at the event.
- The Water Resources Institute (WRI) at Cal State San Bernardino is offering no-cost interns for an eight to ten week summer program. Our Human Resources Department is working with WRI staff to coordinate GIS intern candidates. Thank you to Director Reed for bringing this program to our attention; we look forward to our continued partnership with WRI.

CONSENT CALENDAR

CONSENT CALENDAR

a) Approve Minutes of the May 10, 2016 Regular Board Meeting.
b) Approve Minutes of the May 24, 2016 Regular Board Meeting
c) Approve Board Calendar of Events.
d) Approve Cash Disbursements for the month ending May 31, 2016.
e) Receive and File June 2016 Legislative Report.
f) Approve the casting of the official ballot voting in favor of the proposed changes to the California Special Districts Association Bylaws.
g) Approve an award of contract for Reservoir 3 Site Improvements to A & Y Asphalt Contractors in the amount of $393,452 and approve a budget transfer of $60,000 from CP7460 to CP7469.

PASSED 5-0

On a motion by Vice President Cetina, and seconded by Director Tiegs to approve the Consent Calendar as submitted. **Passed 5-0.**

PUBLIC HEARING- PROPOSED 2015 URBAN WATER MANAGEMENT PLAN

RESOLUTION NO. 2016-6-3 ADOPTING THE DISTRICT'S 2015 UWMP

PASSED 5-0

President Curatalo opened the Public Hearing at 6:20pm and asked Mr. Braden Yu to provide a presentation on the Urban Water Management Plan.

Mr. Yu announced that per the Urban Water Management Plan Act, the District published notice of this hearing and comment period for two consecutive weeks beginning May 31, 2016. No comments have been received to date. A redlined copy of the Urban Water Management Plan (UWMP/Plan) has been provided at the dais. The updates in the redlined copy are comprised of grammatical revisions and general cleanup of language to make the Plan easier to read and understand. The Plan outlines the details of the District's supply and production capacity to meet our service area demands.

President Curatalo announced that notice of the date and time of the hearing were published and delivered as required by law including notices to public agencies and publication in a newspaper.

President Curatalo invited members of the public to approach the podium to give testimony. The following people provided verbal comment:

Carmen Gonzalez

At 6:41pm President Curatalo declared the public hearing closed.

On a motion by Director Tiegs, and seconded by Vice President Cetina to adopt Resolution No. 2016-6-3 Adopting the District's 2015 Urban Water Management Plan. **Passed 5-0.**

RESOLUTION NO. 2016-6-1 ANNUAL OPERATING AND CAPITAL IMPROVEMENT BUDGET FOR THE FISCAL YEAR ENDING JUNE 30, 2017 AND RESOLUTION NO. 2016-6-2 WAGE AND BENEFITS ADJUSTMENT

RESOLUTION NO. 2016-6-1 APPROVING THE ANNUAL OPERATING AND CIP BUDGET FOR FY2017

PASSED 5-0

Mr. Chad Brantley gave a presentation on the proposed Annual Operating and Capital Improvement Budget for Fiscal Year 2017. The proposed budget includes a wage and benefits adjustment of 3 percent effective July 1, 2016 with an increased employee contribution to CalPERS pension benefit costs.

On a motion by Director Reed, and seconded by Director Gonzalez to adopt Resolution No. 2016-6-1 Approving the Annual Operating and Capital Improvement Budget for the Fiscal Year ending June 30, 2017, as submitted. **Passed 5-0.**

RESOLUTION NO. 2016-6-2 APPROVING A WAGE AND BENEFITS ADJUSTMENT

PASSED 5-0

On a motion by Director Tiegs, and seconded by Vice President Cetina to adopt Resolution No. 2016-6-2 Approving a Wage and Benefits Adjustment effective July 1, 2016 with increased employee contribution to CalPERS pension benefit costs, as submitted. **Passed 5-0.**

BOARD COMMITTEE REPORTS

BOARD COMMITTEE REPORTS

A) May 10, 2016 Human Resources/Risk Management Committee
Director Tiegs reported the notes accurately reflect what occurred at the meeting.

B) May 17, 2016 Water Resources Committee
President Curatalo reported the notes accurately reflect what occurred at the meeting.

C) June 2, 2016 Finance Committee
Director Reed reported the notes accurately reflect what occurred at the meeting.

BOARD MEMBER REPORTS

BOARD MEMBER REPORTS

Director Reed

- Attended the WRI Garden Art show on June 9, 2016 and spoke on behalf of the District during the Donor Spotlight portion of the event. The student art displayed was meant to demonstrate different aspects of water and the water industry.
- Attended MWD's inspection tour of Diamond Valley Lake and Lake Skinner on June 10, 2016.
- Thank you to Ms. Gonzalez for speaking during public comment. The Board appreciates engaged customers who can share their observations intuitively.

Director Gonzalez

- Attended the Three Valleys MWD Leadership Breakfast on June 9, 2016. Appreciated the opportunity for insight on Tim Quinn's work in the water industry.

Director Tiegs

- Thanked the water crews that were onsite to repair a leak in her neighborhood last week. Their performance that day is a reflection of every employee and the culture of this District. Thank you for the hard work and dedication to our customers.

Vice President Cetina

- Lake Powell is expected to have 90 percent of its normal in-flow this year with over-all storage up by 50 percent. The state system has storage; the issue is getting the water through the system.
- Scheduled to attend a Water Education Foundation tour of the Sacramento Delta on June 15, 2016. Will report back to the Board at our next meeting.

President Curatalo

- Thanked Director Tiegs for her report and heartfelt expression of gratitude to District employees.

CLOSED SESSION

CLOSED SESSION

At 7:28 p.m. President Curatalo announced that after a brief recess a closed session would be held pursuant to:

PUBLIC EMPLOYEE PERFORMANCE EVALUATION
Pursuant to Government Code Section 54957
Title: General Manager

Closed Session was called to order at 7:35 p.m.
In attendance were the entire Board and Legal Counsel (Ferre).

RECONVENE/REPORT ON CLOSED SESSION

RECONVENE/REPORT

The regular meeting reconvened at 8:04 p.m. at which time Mr. Jeff Ferre reported that no reportable action took place.

ADJOURNMENT

ADJOURNED AT 8:06 p.m.

There being no further business to come before the Board, the meeting was adjourned in honor and memory of those impacted by the Orlando Shooting and in memory of Director Gene Koopman of IEUA on a motion by Director Tiegs, and seconded by Director Reed at 8:06 p.m.

Martin E. Zvirbulis
Secretary/General Manager

ATTEST:

James V. Curatalo, Jr.
President

APPENDIX J – RESOLUTION 2016-6-3 OF ADOPTION

Appendix J

Resolution 2016-6-3 of Adoption

RESOLUTION NO. 2016-6-3

RESOLUTION OF THE BOARD OF DIRECTORS OF THE CUCAMONGA VALLEY WATER DISTRICT ADOPTING THE CUCAMONGA VALLEY WATER DISTRICT'S 2015 URBAN WATER MANAGEMENT PLAN

WHEREAS, California Water Code section 10610 et seq., known as the Urban Water Management Planning Act (the Act) mandates that every urban water supplier providing water for municipal purposes either directly or indirectly to more than 3,000 customers or supplying more than 3,000 acre feet of water annually, prepare an Urban Water Management Plan (UWMP) at least once every five years on or before December 31, in years ending in five and zero; and

WHEREAS, pursuant to recent amendments to the Act, urban water suppliers are required to update and electronically submit their 2015 UWMPs to the California Department of Water Resources (DWR) by July 1, 2016; and

WHEREAS, California Water Code section 10608 et seq., known as the Water Conservation Act of 2009 or Senate Bill X7-7 (SBX7-7), among other things, established requirements for urban retail water suppliers to prepare and report urban water use targets in their 2010 and 2015 UWMPs in accordance with the goals of SBX7-7 to reduce statewide daily per capita water use 10 percent by December 31, 2015 and 20 percent by December 31, 2020; and

WHEREAS, the Cucamonga Valley Water District (District) is an "urban retail water supplier" for purposes of the Act and SBX7-7 because it directly provides potable municipal water to more than 3,000 end users; and

WHEREAS, in accordance with applicable law, including the requirements of the Act and SBX7-7, the District has prepared its 2015 UWMP to ensure the availability and reliability of its water supplies over the next 20-year planning horizon, and has undertaken certain notice, agency coordination, public involvement and outreach, and other procedures in connection with the preparation of its 2015 UWMP; and

WHEREAS, as authorized by Section 10620(e) of the Act, the District has prepared its 2015 UWMP with its own staff, with the assistance of consulting professionals, and in cooperation with other governmental agencies, and has utilized and relied upon industry standards and the expertise of industry professionals in preparing its 2015 Plan, and has also in part utilized and relied upon the DWR Guidebook for Urban Water Suppliers to Prepare Urban Water Management Plans (March 2016), including its related appendices; and

WHEREAS, in accordance with applicable law, including Water Code sections 10608.26 and 10642, and Government Code section 6066, the District made its Draft 2015 UWMP available for public inspection, and conducted a properly noticed a public hearing regarding its 2015 UWMP; and

WHEREAS, the District held its public hearing regarding the 2015 UWMP on June 14, 2016, wherein, among other things, the District encouraged the active involvement of diverse social, cultural, and economic members of the community within the District's service area with regard to the preparation and adoption of the 2015 UWMP, allowed input by members of the public and other interested entities regarding all aspects of the 2015 UWMP, allowed community input regarding the District's implementation plan for complying with SBX7-7, considered the economic impacts of its implementation plan for complying with SBX7-7, and confirmed the method under Water Code section 10608.20(b) for determining the District's urban water use targets; and

WHEREAS, the Board of Directors of the District has reviewed and considered the purposes and requirements and of the Urban Water Management Planning Act and SBX7-7, the contents of the 2015 UWMP, the documentation contained in the administrative record in support of the 2015 UWMP, and all public and agency input received with regard to the 2015 UWMP, and has determined that the factual analyses and conclusions set forth in the 2015 UWMP are supported by substantial evidence.

NOW, THEREFORE, BE IT RESOLVED BY THE BOARD OF DIRECTORS OF THE CUCAMONGA VALLEY WATER DISTRICT that:

1. That the above Recitals are true and correct.

2. Method 1 is confirmed under Water Code section 10608.20(b) for determining the District's urban water use targets, and the District's 2015 Urban Water Management Plan is hereby approved and adopted.

3. The General Manager is hereby authorized and directed to include a copy of this Resolution in the 2015 UWMP.

4. The General Manager is hereby authorized and directed, in accordance with Water Code sections 10621(d) and 10644(a), to electronically submit a copy of the adopted 2015 UWMP to the California Department of Water Resources no later than July 1, 2016.

5. The General Manager is hereby authorized and directed, in accordance with Water Code section 10644(a), to submit a copy of the adopted 2015 UWMP to the California State Library within thirty (30) days of this adoption date.

6. The General Manager is hereby authorized and directed, in accordance with Water Code sections 10635(b) and 10644(a), to submit copies of the adopted 2015 UWMP, specifically including the portion of the UWMP prepared in accordance with Water Code section 10635(a), to any city and county within which the District provides water supplies within thirty (30) days of this adoption date.

7. The General Manager is hereby authorized and directed, in accordance with Water Code section 10645, to make the 2015 UWMP available for public review at the offices of the District during normal business hours not later than thirty (30) days after filing a copy thereof with the California Department of Water Resources.

8. The General Manager is hereby authorized and directed to recommend to the Board of Directors additional steps necessary or appropriate to effectively carry out the implementation of the 2015 UWMP in accordance with applicable law, including the Urban Water Management Planning Act and SBX7-7.

APPROVED, ADOPTED AND SIGNED this 14th day of June, 2016

CUCAMONGA VALLEY WATER DISTRICT

James V. Curatalo, Jr.
President

ATTEST:

Martin E. Zvirbulis
Secretary and General Manager/CEO

APPENDIX K – CVWD ANNUAL WATER USE EFFICIENCY PROGRAMS REPORT FY 14-15

Appendix K

CVWD Annual Water Use Efficiency Programs Report
FY2014-2015

CUCAMONGA VALLEY WATER DISTRICT

Annual Water Use Efficiency Programs Report
FY 2014-2015

Cucamonga Valley
Water District

Cucamonga Valley Water District
IEUA Conservation Programs Annual Report

Program	District Devices/ Rebates	Gallons Saved (year)	AF Saved (year)	AF Saved Lifetime	Funding Sources (dollars) Outside Funding	IEUA	MWD	Total	Payback Period (years) [1]
FY 2014-2015									
SoCal Water$mart Residential Rebates									
High Efficiency Toilets (HET)	445	6,163,584	18.91	378.25	$0	$22,250	$22,250	$44,500	3.1
High Efficiency Clothes Washers (HECW)	306	4,238,330	13.01	260.10	$0	$19,890	$26,010	$45,900	4.7
Rotating Nozzles for Pop-up Spray Heads	373	5,166,330	15.85	317.05	$0	$373	$1,492	$1,865	0.2
Weather based Irrigation Controllers (WBIC)	34	470,926	1.45	28.90	$0	$2,380	$2,720	$5,100	4.7
Turf Removal (79,670 Sq. Ft.)	50	3,373,065	10.35	207	$0	$0	$157,556	$157,556	20.2
Rain Barrels	70	969,553	2.98	59.50	$0	$0	$5,250	$5,250	2.3
IEUA Locally Implemented Residential Programs									
FreeSprinklerNozzles.com Program	11,090	153,581,723	471.33	9,426.50	$0	$0	$25,650	$25,650	0.1
Residential Landscape Retrofit Program (79 WBIC/1,323 Nozzles)	52	10,102,900	31	286	$55,569	$0	$55,569	$111,138	4.8
Landscape Transformation Program (26,070 Sq. Ft.)	27	556,097	1.71	17.07	$0	$34,134	$52,140	$86,274	67.2
Subtotal	**12,447**	**184,622,506**	**567**	**10,980**	**$55,569**	**$79,027**	**$348,637**	**$483,233**	**107**
SoCal Water$mart Commercial Rebates									
High Efficiency Toilets (HET)	107	1,482,030	5	91	$0	$14,445	$17,655	$32,100	9.4
Waterless Urinals	0	0	0	0	$0	$0	$0	$0	0.0
Cooling Tower Controller	0	0	0	0	$0	$0	$0	$0	0.0
Weather Based Irrigation Controllers (WBIC)	41	4,342,618	13.33	133	$0	$14,750	$14,850	$29,600	3.0
Rotating Nozzles for Pop-up Spray Heads	22,234	28,984,242	88.94	444.68	$0	$552	$3,086	$3,638	0.1
Large Rotary Nozzles	0	0	0	0	$0	$0	$0	$0	0.0
Central Computerized Irrigation Controller	0	0	0	0	$0	$0	$0	$0	0.0
Laminar Flow Restrictor	0	0	0	0	$0	$0	$0	$0	0.0
Air-Cooled Ice Machine	0	0	0	0	$0	$1,000	$1,000	$2,000	0.0
Turf Removal (283,719 Sq. Ft.)	36	11,993,120	36.8	368	$0	$283,719	$567,438	$851,157	30.8
IEUA Locally Implemented Commercial Programs									
FreeSprinklerNozzles.com Program	26,025	33,921,089	104.10	520.50	$0	$0	$84,581	$84,581	1.1
Subtotal	**48,443**	**80,723,099**	**248**	**1,557**	**$0**	**$314,466**	**$688,610**	**$1,003,077**	
TOTAL	**60,890**	**265,345,605**	**814**	**12,538**	**$55,569**	**$393,493**	**$1,037,247**	**$1,486,310**	

[1] Payback period = $\frac{\text{Total direct program costs}}{\text{AF saved/year x MWD Tier II rate/AF}}$

Cucamonga Valley Water District
IEUA Conservation Programs Annual Report

Program	District Devices/ Rebates	Gallons Saved (year)	AF Saved (year)	AF Saved Lifetime	Funding Sources (dollars) Outside Funding	IEUA	MWD	Total	Payback Period (years) [1]
FY 2013-2014									
SoCal Water$mart Residential Rebates									
High Efficiency Toilets (HET)	170	2,354,273	7.23	144.50	$0	$8,500	$8,500	$17,000	3.1
High Efficiency Clothes Washers (HECW)	383	5,304,040	16.28	325.55	$0	$24,895	$32,555	$57,450	4.7
Rotating Nozzles for Pop-up Spray Heads	15	207,730	0.64	12.75	$0	$15	$60	$75	0.2
Weather based Irrigation Controllers (WBIC)	34	470,855	1.45	28.90	$0	$2,380	$2,720	$5,100	4.7
Rain Barrels	26	360,065	1.11	22.10	$0	$0	$1,950	$1,950	2.3
IEUA Locally Implemented Residential Programs									
FreeSprinklerNozzles.com Program	6,153	85,210,851	261.50	5,230.05	$0	$0	$23,156	$23,156	0.1
Residential Landscape Retrofit Program (64 WBIC/1,366 Nozzles)	41	8,736,065	27	238	$22,825	$0	$22,825	$45,650	2.3
Landscape Transformation Program (12,190 Sq. Ft.)	13	556,097	1.71	17.07	$0	$19,026	$17,890	$36,916	28.8
Subtotal	**6,835**	**103,199,977**	**317**	**6,019**	**$22,825**	**$54,816**	**$109,656**	**$187,297**	**46**
SoCal Water$mart Commercial Rebates									
High Efficiency Toilets (HET)	0	0	0	0	$0	$0	$0	$0	0.0
Waterless Urinals	0	0	0	0	$0	$0	$0	$0	0.0
Cooling Tower Controller	0	0	0	0	$0	$0	$0	$0	0.0
Weather Based Irrigation Controllers (WBIC)	20	2,118,032	6.50	65	$0	$14,750	$14,850	$29,600	6.1
Rotating Nozzles for Pop-up Spray Heads	792	1,032,296	3.17	15.84	$0	$552	$3,086	$3,638	1.5
Large Rotary Nozzles	0	0	0	0	$0	$0	$0	$0	0.0
Central Computerized Irrigation Controller	0	0	0	0	$0	$0	$0	$0	0.0
Laminar Flow Restrictor	0	0	0	0	$0	$0	$0	$0	0.0
Air-Cooled Ice Machine	1	1,588,198	5	49	$0	$1,000	$1,000	$2,000	0.5
Turf Removal	0	0	0	0	$0	$0	$0	$0	0.0
IEUA Locally Implemented Commercial Programs									
FreeSprinklerNozzles.com Program	12,700	16,553,231	50.80	254.00	$0	$0	$41,275	$41,275	1.1
Subtotal	**13,513**	**21,291,756**	**65**	**384**	**$0**	**$16,302**	**$60,211**	**$76,514**	
TOTAL	**20,348**	**124,491,733**	**382**	**6,402**	**$22,825**	**$71,118**	**$169,867**	**$263,811**	

[1] Payback period = $\frac{\text{Total direct program costs}}{\text{AF saved/year x MWD Tier II rate/AF}}$

Cucamonga Valley Water District
IEUA Conservation Programs Annual Report

Program	District Devices/ Rebates	Gallons Saved (year)	AF Saved (year)	AF Saved Lifetime	Funding Sources (dollars) Outside Funding	IEUA	MWD	Total	Payback Period (years) [1]
FY 2012-2013									
SoCal Water$mart Residential Rebates									
High Efficiency Toilets (HET)	3	41,546	0.13	2.55	$0	$150	$150	$300	3.2
High Efficiency Clothes Washers (HECW)	295	4,085,357	12.54	250.75	$0	$19,175	$25,075	$44,250	4.9
Rotating Nozzles for Pop-up Spray Heads	16	221,579	0.68	13.60	$0	$16	$64	$80	0.2
Weather based Irrigation Controllers (WBIC)	22	304,671	0.94	18.70	$0	$1,540	$1,760	$3,300	4.9
IEUA Locally Implemented Residential Programs									
FreeSprinklerNozzles.com Program	8,496	117,658,279	361.08	7,221.60	$0	$0	$23,156	$23,156	0.1
Residential Landscape Retrofit Program	42	12,382,338	38	316	$23,816	$3,876	$27,693	$55,385	2.0
Landscape Transformation Program (5,455 Sq. Ft.)	6	248,852	0.76	7.64	$1,900	$4,249	$5,119	$11,268	20.3
Subtotal	**8,880**	**134,942,622**	**414**	**7,831**	**$25,716**	**$29,006**	**$83,017**	**$137,739**	**35**
IEUA High Efficiency Toilet (HET) Installation Prog.									
IEUA Multi-Family Direct Install Prog. (HET)	0	0	0.00	0.00	$0	$0	$0	$0	0.0
IEUA Single-Family Direct Install Prog. (HET)	179	2,478,911	7.61	152.15	$13,128	$6,383	$8,950	$28,461	5.1
Subtotal	**179**	**2,478,911**	**8**	**152**	**$13,128**	**$6,383**	**$8,950**	**$28,461**	
SoCal Water$mart Commercial Rebates									
High Efficiency Toilets (HET)	0	0	0	0	$0	$0	$0	$0	0.0
Waterless Urinals	0	0	0	0	$0	$0	$0	$0	0.0
Cooling Tower Controller	0	0	0	0	$0	$0	$0	$0	0.0
High Efficiency Clothes Washers	0	0	0	0	$0	$0	$0	$0	0.0
Weather based Irrigation Controllers (WBIC)	12	1,270,819	3.90	39	$0	$6,265	$8,900	$15,165	5.3
Rotating Nozzles for Pop-up Spray Heads	30	39,102	0.12	0.60	$0	$30	$120	$150	1.7
Large Rotary Nozzles	0	0	0	0	$0	$0	$0	$0	0.0
Central Computerized Irrigation Controller	0	0	0	0	$0	$0	$0	$0	0.0
Laminar Flow Restrictor	0	0	0	0	$0	$0	$0	$0	0.0
Air-Cooled Ice Machine	0	0	0	0	$0	$0	$0	$0	0.0
IEUA Locally Implemented Commercial Programs									
Fontana Unified School Retrofit Program	0	0	0	0	$0	$0	$0	$0	0.0
FreeSprinklerNozzles.com Program	17,635	22,985,530	70.54	352.70	$0	$0	$57,314	$57,314	1.1
Subtotal	**17,677**	**24,295,451**	**75**	**392**	**$0**	**$6,295**	**$66,334**	**$72,630**	
TOTAL	**26,736**	**161,716,984**	**496**	**8,375**	**$38,844**	**$41,684**	**$158,301**	**$238,830**	

[1] Payback period = $\frac{\text{Total direct program costs}}{\text{AF saved/year x MWD Tier II rate/AF}}$

Cucamonga Valley Water District
IEUA Conservation Programs Annual Report

Program	District Devices/ Rebates	Gallons Saved (year)	AF Saved (year)	AF Saved Lifetime	Funding Sources (dollars) DWR	IEUA	MWD	Total	Payback Period (years) [1]
FY 2011-2012									
Residential Rebate Programs									
High Efficiency Clothes Washers (HECW)	361	3,246,649	9.96	149.45	0	0	30,685	30,685	4.5
Rotating Nozzles for Pop-up Spray Heads	513	668,646	2.05	10.26	0	1,026	1,539	2,565	1.8
Weather Based Irrigation Controllers (WBIC)	33	3,494,752	10.73	107.25	0	1,485	2,640	4,125	0.6
FreeSprinklerNozzles.com Program	19,915	25,957,291	80	398.30	0	0	21,375	21,375	0.4
Residential Landscape Retrofit Program	0	0	0	0.00	0	0	0	0	0.0
Subtotal	**20,822**	**33,367,338**	**102**	**665.26**	**0.00**	**2,511.00**	**56,239.00**	**58,750.00**	
IEUA Multi-Family Direct Install Prog. (HET)									
IEUA Multi-Family Direct Install Prog. (HET)	10	138,487	0.43	8.50	733	357	500	1,590	5.5
IEUA Single-Family Direct Install Prog. (HET)	189	2,617,398	8.03	160.65	13,861	6,740	9,450	30,051	5.5
Subtotal	**199**	**2,755,885**	**8**	**169.15**	**14,594.66**	**7,096**	**9,950**	**31,641.00**	
CII Save-A-Buck Rebate Program									
High Efficiency Toilets (HET)	0	0	0.00	0.00	0	0	0	0	0.0
Waterless Urinals	15	599,729	1.84	36.81	0	750	3,000	3,750	3.0
PH Conductivity Controller	0	0	0.00	0.00	0	0	0	0	0.0
High Efficiency Clothes Washers	0	0	0.00	0.00	0	0	0	0	0.0
Weather Based Irrigation Controllers (WBIC)	37	3,918,358	12.03	120.25	0	2,716	6,775	9,491	1.2
Rotating Nozzles for Pop-up Spray Heads	1,493	1,945,982	5.97	29.86	0	1,493	4,479	5,972	1.5
Large Rotary Nozzles	0	0	0.00	0.00	0	0	0	0	0.0
FreeSprinklerNozzles.com Program	1,300	7,624,913	23.40	234.00	0	0	16,900	16,900	1.1
Central Computerized Irrigation Controller	11	17,470,176	53.61	536.14	0	3,480	8,700	12,180	0.3
Subtotal	**2,893**	**31,560,846**	**97**	**957.11**	**1.00**	**8,455.65**	**39,865.10**	**48,321.75**	
TOTAL	**23,914**	**67,684,069**	**208**	**1,791.53**	**14,595.66**	**18,062.99**	**106,054.10**	**138,712.75**	

[1] Payback period = $\frac{\text{Total direct program costs}}{\text{AF saved/year x MWD Tier II rate/AF}}$

Cucamonga Valley Water District
IEUA Conservation Programs Annual Report

Program	District Devices/ Rebates	Gallons Saved (year)	AF Saved (year)	AF Saved Lifetime	Funding Sources (dollars) DWR	IEUA	MWD	Total	Payback Period (years) [1]
FY 2010-2011									
Residential Rebate Programs									
High Efficiency Toilets (HET)	44	609,341	1.87	37.40	0	1,540	2,200	3,740	4.0
High Efficiency Clothes Washers (HECW)	685	6,160,539	18.91	283.59	0	0	58,225	58,225	6.2
Rotating Nozzles for Pop-up Spray Heads	493	642,578	1.97	9.86	0	986	1,479	2,465	2.5
Weather Based Irrigation Controllers (WBIC)	11	1,164,917	3.58	35.75	0	495	880	1,375	0.8
Synthetic Turf (6,587 Sq. Ft.)	7	300,538	0.92	9.22	0	2,964	1,976	4,940	10.7
FreeSprinklerNozzles.com Program	285	371,526	1	5.70	0	0	21,375	21,375	37.6
Subtotal	**1,525**	**9,249,440**	**28**	**381.52**	**0.00**	**5,985.15**	**86,135.10**	**92,120.25**	
IEUA Multi-Family Direct Install Prog. (HET)									
IEUA Multi-Family Direct Install Prog. (HET)	287	3,974,568	12.20	243.95	21,049	10,234	14,350	45,633	0.0
Subtotal	**287**	**3,974,568**	**12**	**243.95**	**21,048.58**	**10,234**	**14,350**	**45,633.00**	
CII Save-A-Buck Rebate Program									
High Efficiency Toilets (HET)	0	0	0.00	0.00	0	0	0	0	0.0
Waterless Urinals	9	359,837	1.10	22.09	0	450	1,800	2,250	4.1
PH Conductivity Controller	2	419,696	1.29	6.44	0	1,000	3,500	4,500	7.0
Weather Based Irrigation Controllers (WBIC)	43	4,553,768	13.98	139.75	0	9,275	22,175	31,450	4.5
Synthetic Turf (Sq. Ft.)	0	0	0.00	0.00	0	0	0	0	0.0
Rotating Nozzles for Pop-up Spray Heads	2,998	3,907,605	11.99	59.96	0	2,998	8,994	11,992	2.0
Large Rotary Nozzles	0	0	0.00	0.00	0	0	0	0	0.0
Pre-Rinse Nozzles	0	0	0.00	0.00	0	0	0	0	0.0
Subtotal	**3,052**	**9,240,906**	**28**	**228.24**	**0.00**	**13,723**	**36,469**	**50,192.00**	
TOTAL	**4,864**	**22,464,914**	**69**	**853.71**	**21,048.58**	**29,942.57**	**136,954.10**	**187,945.25**	

[1] Payback period = $\frac{\text{Total direct program costs}}{\text{AF saved/year x MWD Tier II rate/AF}}$

Cucamonga Valley Water District
IEUA Conservation Programs Annual Report

Program	District Devices/ Rebates	Gallons Saved (year)	AF Saved (year)	AF Saved Lifetime	Funding Sources (dollars) DWR	IEUA	MWD	Total	Payback Period (years) [1]
FY 2009-2010									
Residential Rebate Programs									
High Efficiency Toilets (HET)	65	900,163	2.76	55.25	0	2,275	3,250	5,525	4.0
High Efficiency Clothes Washers (HECW)	122	1,097,205	3.37	50.51	0	6,100	13,420	19,520	11.6
Rotating Nozzles for Pop-up Spray Heads	216	281,535	0.86	4.32	0	432	864	1,296	3.0
Weather Based Irrigation Controllers (WBIC)	7	741,311	2.28	22.75	0	0	519	519	0.5
Water Wise Landscape (Turf Buy Back) (0 Sq. Ft.)	0	0	0.00	0.00	0	0	0	0	0.0
Synthetic Turf (17,168 Sq. Ft.)	13	783,189	2.40	24.04	0	7,726	5,150	12,876	10.7
Subtotal	**423**	**3,803,405**	**12**	**156.86**	**0**	**16,533**	**23,203**	**39,736**	
IEUA Multi-Family Direct Install Prog. (HET)									
IEUA Multi-Family Direct Install Prog. (HET)	129	1,786,478	5.48	109.65	9,461	4,600	21,285	35,346	0.0
Subtotal	**129**	**1,786,478**	**5**	**109.65**	**9,460.86**	**4,600**	**21,285**	**35,346.00**	
CII Save-A-Buck Rebate Program									
ULFT Tank	1	12,350	0.04	0.76	0	0	60	60	3.2
High Efficiency Toilets (HET)	7	96,941	0.30	5.95	0	945	1,155	2,100	14.2
Waterless Urinals	144	5,757,396	17.67	353.38	0	0	57,600	57,600	6.5
High Efficiency Clothes Washers	0	0	0.00	0.00	0	0	0	0	0.0
Water Brooms	0	0	0.00	0.00	0	0	0	0	0.0
Weather Based Irrigation Controllers (WBIC)	49	5,189,177	15.93	159.25	0	15,735	27,548	43,283	5.5
Synthetic Turf (Sq. Ft.)	0	0	0.00	0.00	0	0	0	0	0.0
Rotating Nozzles for Pop-up Spray Heads	8,081	10,532,808	32.32	161.62	0	0	32,324	32,324	0.0
Pre-Rinse Nozzles	0	0	0.00	0.00	0	0	0	0	0.0
Subtotal	**8,282**	**21,588,671**	**66**	**680.95**	**0.00**	**16,680**	**118,687**	**135,367.00**	
TOTAL	**8,834**	**27,178,554**	**83**	**947.47**	**9,460.86**	**37,812.74**	**163,175.40**	**210,449.00**	

[1] Payback period = $\frac{\text{Total direct program costs}}{\text{AF saved/year x MWD Tier II rate/AF}}$

Cucamonga Valley Water District
IEUA Conservation Programs Annual Report

Program	District Devices/ Rebates	Gallons Saved (year)	AF Saved (year)	AF Saved Lifetime	Funding Sources (dollars) DWR	IEUA	MWD	Total	Payback Period (years) [1]
FY 2008-2009									
Residential Rebate Programs									
Ultra Low Flush Toilets (ULFT)	3	37,049	0.11	2.27	0	0	180	180	3.2
High Efficiency Toilets (HET)	297	4,113,054	12.62	252.45	0	0	49,005	49,005	7.8
High Efficiency Clothes Washers (HECW)	323	2,904,896	8.91	133.72	0	0	35,530	35,530	8.0
Rotating Nozzles for Pop-up Spray Heads	575	749,457	2.30	11.50	0	0	2,300	2,300	2.0
Weather Based Irrigation Controllers (WBIC)	4	423,606	1.30	13.00	0	0	320	320	0.5
Water Wise Landscape (Turf Buy Back) (66,317 Sq. Ft.)	49	3,025,325	9.28	92.84	0	87,921	0	87,921	19.0
Synthetic Turf (35,987 Sq. Ft.)	43	1,641,696	5.04	50.38	0	10,796	10,796	21,592	8.6
Subtotal	**1,294**	**12,895,084**	**40**	**556.17**	**0**	**98,717**	**98,131**	**196,848**	
IEUA Multi-Family Direct Install Prog. (HET)									
IEUA Multi-Family Direct Install Prog. (HET)	0	0	0.00	0.00	0	0	0	0	0.0
Subtotal	**0**	**0**	**0**	**0.00**	**0.00**	**0**	**0**	**0.00**	
CII Save-A-Buck Rebate Program									
ULFT Flushometer	0	0	0.00	0.00	0	0	0	0	0.0
ULFT Tank	1	12,350	0.04	0.76	0	0	60	60	3.2
High Efficiency Toilets (HET)	587	8,129,168	24.95	498.95	0	79,245	96,855	176,100	14.2
Waterless Urinals	162	6,477,071	19.88	397.55	0	0	64,800	64,800	6.5
Conductivity Controller	4	839,392	2.576	12.88	0	175	2,500	2,675	2.1
High Efficiency Clothes Washers	3	26,980	0.08	0.83	0	300	240	540	13.1
Water Brooms	3	149,957	0.46	2.30	0	0	450	450	2.0
Weather Based Irrigation Controllers (WBIC)	10	1,059,016	3.25	32.50	0	0	6,690	6,690	4.1
Synthetic Turf (Sq. Ft.)	0	0	0.00	0.00	0	0	0	0	0.0
Rotating Nozzles for Pop-up Spray Heads	0	0	0.00	0.00	0	0	0	0	0.0
Large Rotary Nozzles	0	0	0.00	0.00	0	0	0	0	0.0
Pre-Rinse Nozzles	0	0	0.00	0.00	0	0	0	0	0.0
Subtotal	**770**	**16,693,933**	**51**	**945.77**	**0.00**	**79,720**	**171,595**	**251,315.00**	
MWD Public Sector Program									
High Efficiency Toilets (HET)	0	0	0.00	0.00	0	0	0	0	0.0
Waterless Urinals	0	0	0.00	0.00	0	0	0	0	0.0
Water Brooms	16	799,769	2.45	12.27	0	0	5,603	5,603	4.6
Weather Based Irrigation Controllers (WBIC)	22	4,365,752	13.40	133.98	0	0	36,539	36,539	5.5
Central Computer Irrigation Controllers (CCIC)	25	8,081,105	24.80	248.00	0	0	109,880	109,880	8.9
Synthetic Turf (Sq. Ft.)	0	0	0.00	0.00	0	0	0	0	0.0
Subtotal	**63**	**13,246,625**	**41**	**394.25**	**0.00**	**0.00**	**152,021.99**	**152,021.99**	
TOTAL	**2,127**	**42,835,643**	**131**	**1,896.19**	**0.00**	**178,437.10**	**421,748.09**	**600,185.19**	

[1] Payback period = $\frac{\text{Total direct program costs}}{\text{AF saved/year x MWD Tier II rate/AF}}$

Cucamonga Valley Water District
IEUA Conservation Programs Annual Report

Program	District Devices/ Rebates	Gallons Saved (year)	AF Saved (year)	AF Saved Lifetime	Funding Sources (dollars) DWR	IEUA	MWD	Total	Payback Period (years) [1]
FY 2007-2008									
Residential Rebate Programs									
Ultra Low Flush Toilets (ULFT)	49	605,138	1.86	37.14	0	0	2,940	2,940	3.7
High Efficiency Toilets (HET)	45	623,190	1.91	38.25	0	0	7,425	7,425	9.1
High Efficiency Clothes Washers (HECW)	457	4,110,024	12.61	189.20	0	0	50,270	50,270	9.3
Rotating Nozzles for Pop-up Spray Heads	616	802,897	2.46	12.32	0	0	2,464	2,464	2.3
Weather Based Irrigation Controllers (WBIC)	15	1,588,524	4.88	48.75	0	2,400	1,200	3,600	1.7
Water Wise Landscape (Turf Buy Back) (8,199 Sq. Ft.)	6	374,031	1.15	11.48	0	16,398	0	16,398	33.5
Synthetic Turf (33,087 Sq. Ft.)	34	1,509,400	4.63	46.32	0	9,926	9,926	19,852	10.0
Subtotal	**1,222**	**9,613,204**	**30**	**383.46**	**0**	**28,724**	**74,225**	**102,949**	
IEUA Multi-Family Direct Install Prog. (HET/ULFT)									
IEUA Multi-Family Direct Install Prog. (HET/ULFT)	1,034	12,769,644	39.19	783.77	75,834	36,872	62,040	174,746	10.4
Subtotal	**1,034**	**12,769,644**	**39**	**783.77**	**75,833.56**	**36,872.44**	**62,040.00**	**174,746.00**	
CII Save-A-Buck Rebate Program									
ULFT Flushometer	0	0	0.00	0.00	0	0	0	0	0.0
ULFT Tank	0	0	0.00	0.00	0	0	0	0	0.0
High Efficiency Toilets (HET)	0	0	0.00	0.00	0	0	0	0	0.0
Waterless Urinals	206	8,236,275	25.28	505.52	0	0	82,400	82,400	7.6
Conductivity Controller	1	209,848	0.644	3.22	0	175	625	800	2.9
High Efficiency Clothes Washers	0	0	0.00	0.00	0	0	0	0	0.0
Water Brooms	0	0	0.00	0.00	0	0	0	0	0.0
Weather Based Irrigation Controllers (WBIC)	3	317,705	0.98	9.75	0	0	1,890	1,890	4.5
Synthetic Turf (Sq. Ft.)	0	0	0.00	0.00	0	0	0	0	0.0
Rotating Nozzles for Pop-up Spray Heads	0	0	0.00	0.00	0	0	0	0	0.0
Subtotal	**210**	**8,763,828**	**27**	**518.49**	**0.00**	**175.00**	**84,915.00**	**85,090.00**	
MWD Public Sector Program									
High Efficiency Toilets (HET)	0	0	0.00	0.00	0	0	0	0	0.0
Waterless Urinals	0	0	0.00	0.00	0	0	0	0	0.0
Water Brooms	0	0	0.00	0.00	0	0	0	0	0.0
Weather Based Irrigation Controllers (WBIC)	42	6,377,556	19.57	195.72	0	0	42,168	42,168	5.0
Central Computer Irrigation Controllers (CCIC)	36	9,654,313	29.63	296.28	0	0	112,464	112,464	8.9
Subtotal	**78**	**16,031,869**	**49**	**492.00**	**0.00**	**0.00**	**154,632.00**	**154,632.00**	
TOTAL	**2,544**	**47,178,546**	**145**	**2,177.73**	**75,833.56**	**65,771.54**	**375,812.10**	**517,417.20**	

[1] Payback period = $\frac{\text{Total direct program costs}}{\text{AF saved/year x MWD Tier II rate/AF}}$

Cucamonga Valley Water District
IEUA Conservation Programs Annual Report

Program	District Devices/ Rebates	Gallons Saved (year)	AF Saved (year)	AF Saved Lifetime	Funding Sources (dollars) City	IEUA	MWD	Total	Payback Period (years) [1]
FY 2006-2007									
Residential Programs									
Ultra Low Flush Toilets (ULFT)	56	633,194	1.94	38.86	0	0	3,360	3,360	4.0
High Efficiency Toilets (HET)	4	55,395	0.17	3.40	0	0	1,060	1,060	14.6
High Efficiency Clothes Washers (HECW)	426	3,831,226	11.76	176.36	0	0	46,860	46,860	9.3
Rotating Sprinkler Nozzles	158	205,938	0.63	3.16	0	0	632	632	2.3
Weather Based Irrigation Controllers (WBIC) - Rebate	15	3,177,047	9.75	97.50	0	2,400	1,200	3,600	0.9
Weather Based Irrigation Controllers (WBIC) - Distribution	119	25,204,575	77.35	773.50	0	0	28,560	28,560	0.9
Subtotal	**778**	**33,107,374**	**102**	**1,092.79**	**0**	**2,400**	**81,672**	**84,072**	
IEUA Multi-Family Direct Install Prog. (HET/ULFT)									
Multi-Family Toilet Program (HET/ULFT)	4,053	45,827,391	140.64	2,812.78	297,247	144,530	243,180	684,957	11.4
Subtotal	**4,053**	**45,827,391**	**141**	**2,812.78**	**297,247.02**	**144,529.98**	**243,180.00**	**684,957.00**	
CII Save-A-Buck Rebate Program									
ULFT Flushometer	0	0	0	0.00	0	0	0	0	0.0
ULFT Tank	0	0	0	0.00	0	0	0	0	0.0
High Effeciency Toilets (HET)	0	0	0	0.00	0	0	0	0	0.0
Zero Water Urinal	49	1,955,921	6.00	120.05	0	0	19,600	19,600	7.6
Conductivity Controller	0	0	0	0.00	0	0	0	0	0.0
High Efficiency Clothes Washers (HECW)	0	0	0.00	0.00	0	0	0	0	0.0
Water Brooms	0	0	0.00	0.00	0	0	0	0	0.0
Weather Based Irrigation Controllers (WBIC)	0	0	0.00	0.00	0	0	0	0	0.0
Subtotal	**49**	**1,955,921**	**6**	**120.05**	**0.00**	**0.00**	**19,600.00**	**19,600.00**	
TOTAL	**4,880**	**80,890,686**	**248**	**4025.62**	**$297,247**	**$146,930**	**$344,452**	**$788,629**	

[1] Payback period = $\frac{\text{Total direct program costs}}{\text{AF saved/year x MWD Tier II rate/AF}}$

Cucamonga Valley Water District
IEUA Conservation Programs Annual Report

Program	District Devices/ Rebates	Gallons Saved (year)	AF Saved (year)	AF Saved Lifetime	Funding Sources (dollars) City	IEUA	MWD	Total	Payback Period (years) [1]
FY 2005-2006									
Residential Programs									
City Event (ULFT)	0	0	0	0.00	0	0	0	0	0.0
IEUA Regional Event (ULFT)	0	0	0	0.00	0	0	0	0	
IEUA Rebate Program (ULFT)	150	1,696,054	5	104.10	0	150	9,000	9,150	4.1
High Efficiency Clothes Washers	389	3,498,467	10.74	161.05	0	389	42,790	43,179	9.4
Subtotal	**539**	**5,194,521**	**16**	**265.15**	**0.00**	**539.00**	**51,790.00**	**52,329.00**	
IEUA Multi-Family Direct Install Prog. (HET/ULFT)									
Multi-Family Program	343	3,878,311	12	238.04	0	36,015	20,580	56,595	11.1
Subtotal	**343**	**3,878,311**	**12**	**238.04**	**0.00**	**36,015.00**	**20,580.00**	**56,595.00**	**11.1**
CII Save-A-Buck Rebate Program									
ULFT's (Tank)	219	2,476,240	8	151.99	0	0	13,140	13,140	4.0
Conductivity Controller	0	0	0	0.00	0	0	0	0	0.0
High Efficiency Clothes Washers	0	0	0.00	0.00	0	0	0	0	0.0
Water Brooms	1	49,986	0.15	0.77	0	0	100	100	1.5
Pre-Rinse Spray Nozzles	0	0	0.00	0.00	0	0	0	0	0.0
Weather Based Irrigation Controllers (WBIC)	9	1,906,228	5.85	58.50	0	0	0	0	0.0
Subtotal	**229**	**4,432,453**	**14**	**211**	**0**	**0**	**13,240**	**13,240**	
TOTAL	**1,111**	**13,505,286**	**41**	**714.44**	**0**	**$36,554**	**$85,610**	**$122,164**	

Program	District Devices/ Rebates	Gallons Saved (year)	AF Saved (year)	AF Saved Lifetime	Funding Sources (dollars) City	IEUA	MWD	Total	Payback Period (years) [1]
FY 2004-2005									
Residential Programs									
City Event (ULFT)	0	0	0	0.00	0	0	0	0	0.0
IEUA Regional Event (ULFT)	24	271,369	1	16.66	0	264	1,440	1,704	4.8
IEUA Rebate Program (ULFT)	201	2,272,713	7	139.49	0	201	12,060	12,261	4.1
High Efficiency Clothes Washers	542	4,874,470	14.96	224.39	0	542	59,620	60,162	9.4
Pool Cover Rebates	19	324,558	1.00	4.98	0	1,007	0	1,007	2.4
Subtotal	**786**	**7,743,110**	**24**	**385.52**	**0.00**	**2,014.00**	**73,120.00**	**75,134.00**	
IEUA Multi-Family Direct Install Prog. (HET/ULFT)									
Multi-Family Program	520	5,879,655	18	360.88	0	54,600	31,200	85,800	11.1
Subtotal	**520**	**5,879,655**	**18**	**360.88**	**0.00**	**54,600.00**	**31,200.00**	**85,800.00**	**11.1**
CII Save-A-Buck Rebate Program									
ULFT's (Tank)	0	0	0	0.00	0	0	0	0	0.0
Conductivity Controller	0	0	0	0.00	0	0	0	0	0.0
High Efficiency Clothes Washers	0	0	0.00	0.00	0	0	0	0	0.0
Water Brooms	0	0	0.00	0.00	0	0	0	0	0.0
Pre-Rinse Spray Nozzles	1	1,303	0.00	0.02	0	0	50	50	29.3
X-Ray Film Processor (MWD CII)	2	2,085,446	6.40	32.00	0	0	4,000	4,000	1.5
Subtotal	**3**	**2,086,750**	**6**	32.02	**0**	**0**	**4,050**	**4,050**	
TOTAL	**1,309**	**15,709,515**	**48**	**778.42**	**0**	**$56,614**	**$108,370**	**$164,984**	

[1] Payback period = $\frac{\text{Total direct program costs}}{\text{AF saved/year x MWD Tier II rate/AF}}$

Cucamonga Valley Water District
IEUA Conservation Programs Annual Report

Program	District Devices/ Rebates	Gallons Saved (year)	AF Saved (year)	AF Saved Lifetime	Funding Sources (dollars) City	IEUA	MWD	Total	Payback Period (years) [1]
FY 2003-2004									
Residential Programs									
City Event (ULFT)	288	3,256,425	10	199.87	0	576	17,200	17,776	4.7
IEUA Regional Event (ULFT)	49	554,044	2	34.01	0	539	2,940	3,479	5.5
IEUA Rebate Program (ULFT)	432	4,884,637	15	299.81	0	432	25,920	26,352	4.6
High Efficiency Clothes Washers	594	5,342,132	16.39	245.92	0	594	65,340	65,934	5.7
Pool Cover Rebates	47	802,854	2.46	12.30	0	2,491	0	2,491	2.4
Subtotal	**1,410**	**14,840,091**	**46**	**791.90**	**0.00**	**4,632.00**	**111,400.00**	**116,032.00**	
IEUA Multi-Family Direct Install Prog. (HET/ULFT)									
Multi-Family Program	96	1,085,475	3	66.62	0	3,264	5,760	9,024	4.1
Subtotal	**96**	**1,085,475**	**3**	**66.62**	**0**	**3,264**	**5,760**	**9,024**	
CII Save-A-Buck Rebate Program									
High Efficiency Clothes Washers	0	0	0.00	0.00	0	0	0	0	0.0
Water Brooms (Rebates)	43	2,149,378	6.60	32.98	0	4,300	4,300	8,600	3.1
Water Brooms (Distribution)	1	49,986	0.15	0.77	0	0	100	100	1.2
Pre-Rinse Spray Nozzles	0	0	0.00	0.00	0	0	0	0	0.0
Subtotal	**44**	**2,199,364**	**7**	**34**	**0**	**4,300**	**4,400**	**8,700**	
TOTAL	**1,550**	**18,124,930**	**56**	**892.27**	**0**	**$12,196**	**$121,560**	**$133,756**	

FY 2002-2003									
Residential Programs									
City Event (ULFT)	393	4,443,663	14	272.74	0	786	23,580	24,366	4.7
IEUA Regional Event (ULFT)	66	746,264	2	45.80	0	726	3,960	4,686	5.3
IEUA Rebate Program (ULFT)	84	949,790	3	58.30	0	84	5,040	5,124	4.7
High Efficiency Clothes Washers	435	3,912,167	12.01	180.09	0	435	47,850	48,285	5.7
Pool Cover Rebates	73	1,246,986	3.83	19.15	0	3,869	0	3,869	2.4
Subtotal	**1,051**	**11,298,870**	**35**	**576.08**	**0.00**	**5,900.00**	**80,430.00**	**86,330.00**	
IEUA Multi-Family Direct Install Prog. (HET/ULFT)									
Multi-Family Program	3	33,921	0	2.08	0	102	180	282	3.3
Subtotal	**3**	**33,921**	**0**	**2.08**	**0**	**102**	**180**	**282**	
CII Save-A-Buck Rebate Program									
High Efficiency Clothes Washers	9	80,941	0.25	3.73	0	0	2,250	2,250	4.9
Water Brooms	9	449,870	1.38	6.90	0	900	900	1,800	3.1
Pre-Rinse Spray Nozzles	75	97,755	0.30	1.50	0	0	3,750	3,750	0.5
X-Ray Film Processor (MWD CII)	3	3,128,170	9.60	48.00	0	0	6,000	6,000	1.5
Restaurant Table Tent Program	N/A	N/A	N/A	N/A	N/A	N/A	N/A	N/A	N/A
Subtotal	**96**	**3,756,736**	**12**	**60.13**	**0.00**	**900.00**	**12,900.00**	**13,800.00**	
TOTAL	**1,150**	**15,089,528**	**46**	**638.29**	**0**	**$6,902**	**$93,510**	**$100,412**	

[1] Payback period = $\frac{\text{Total direct program costs}}{\text{AF saved/year x MWD Tier II rate/AF}}$

APPENDIX L – AWWA WATER AUDIT

Appendix L

AWWA Water Audit

This spreadsheet-based water audit tool is designed to help quantify and track water losses associated with water distribution systems and identify areas for improved efficiency and cost recovery. It provides a "top-down" summary water audit format, and is not meant to take the place of a full-scale, comprehensive water audit format.

Auditors are strongly encouraged to refer to the most current edition of AWWA M36 Manual for Water Audits for detailed guidance on the water auditing process and targetting loss reduction levels

The spreadsheet contains several separate worksheets. Sheets can be accessed using the tabs towards the bottom of the screen, or by clicking the buttons below.

Please begin by providing the following information

Name of Contact Person:	
Email Address:	
Telephone (incl Ext.):	
Name of City / Utility:	Cucamonga Valley Water District
City/Town/Municipality:	
State / Province:	
Country:	
Year:	2015
Start Date:	01/2015 Enter MM/YYYY numeric format
End Date:	12/2015 Enter MM/YYYY numeric format
Audit Preparation Date:	
Volume Reporting Units:	Acre-feet
PWSID / Other ID:	

The following guidance will help you complete the Audit

All audit data are entered on the ***Reporting Worksheet***

Value can be entered by user

Value calculated based on input data

These cells contain recommended default values

Use of Option (Radio) Buttons: Pcnt: 0.25% Value:

Select the default percentage by choosing the option button on the left

To enter a value, choose this button and enter a value in the cell to the right

The following worksheets are available by clicking the buttons below or selecting the tabs along the bottom of the page

Instructions
The current sheet. Enter contact information and basic audit details (year, units etc)

Reporting Worksheet
Enter the required data on this worksheet to calculate the water balance and data grading

Comments
Enter comments to explain how values were calculated or to document data sources

Performance Indicators
Review the performance indicators to evaluate the results of the audit

Water Balance
The values entered in the Reporting Worksheet are used to populate the Water Balance

Dashboard
A graphical summary of the water balance and Non-Revenue Water components

Grading Matrix
Presents the possible grading options for each input component of the audit

Service Connection Diagram
Diagrams depicting possible customer service connection line configurations

Definitions
Use this sheet to understand the terms used in the audit process

Loss Control Planning
Use this sheet to interpret the results of the audit validity score and performance indicators

Example Audits
Reporting Worksheet and Performance Indicators examples are shown for two validated audits

Acknowledgements
Acknowledgements for the AWWA Free Water Audit Software v5.0

If you have questions or comments regarding the software please contact us via email at: wlc@awwa.org

? Click to access definition
+ Click to add a comment

Water Audit Report for: Cucamonga Valley Water District
Reporting Year: 2015 1/2015 - 12/2015

Please enter data in the white cells below. Where available, metered values should be used; if metered values are unavailable please estimate a value. Indicate your confidence in the accuracy of the input data by grading each component (n/a or 1-10) using the drop-down list to the left of the input cell. Hover the mouse over the cell to obtain a description of the grades

All volumes to be entered as: ACRE-FEET PER YEAR

To select the correct data grading for each input, determine the highest grade where the utility meets or exceeds all criteria for that grade and all grades below it.

Master Meter and Supply Error Adjustments

WATER SUPPLIED

					Pcnt:	Value:	
Volume from own sources:	8	28,248.648	acre-ft/yr				acre-ft/yr
Water imported:	8	13,202.753	acre-ft/yr				acre-ft/yr
Water exported:	8	15.590	acre-ft/yr				acre-ft/yr
WATER SUPPLIED:		**41,435.811**	acre-ft/yr				

Enter negative % or value for under-registration
Enter positive % or value for over-registration

AUTHORIZED CONSUMPTION

Click here: ? for help using option buttons below

				Pcnt:	Value:	
Billed metered:	9	38,715.000	acre-ft/yr			
Billed unmetered:	n/a	0.000	acre-ft/yr			
Unbilled metered:	n/a	0.000	acre-ft/yr			
Unbilled unmetered:	9	517.948	acre-ft/yr	1.25%		acre-ft/yr

Default option selected for Unbilled unmetered - a grading of 5 is applied but not displayed

AUTHORIZED CONSUMPTION: 39,232.948 acre-ft/yr

Use buttons to select percentage of water supplied **OR** value

WATER LOSSES (Water Supplied - Authorized Consumption)

2,202.863 acre-ft/yr

Apparent Losses

				Pcnt:	Value:	
Unauthorized consumption:		103.590	acre-ft/yr	0.25%		acre-ft/yr

Default option selected for unauthorized consumption - a grading of 5 is applied but not displayed

Customer metering inaccuracies:	9	790.102	acre-ft/yr	2.00%		acre-ft/yr
Systematic data handling errors:	9	96.788	acre-ft/yr	0.25%		acre-ft/yr

Default option selected for Systematic data handling errors - a grading of 5 is applied but not displayed

Apparent Losses: 990.479 acre-ft/yr

Real Losses (Current Annual Real Losses or CARL)

Real Losses = Water Losses - Apparent Losses: 1,212.384 acre-ft/yr

WATER LOSSES: 2,202.863 acre-ft/yr

NON-REVENUE WATER

NON-REVENUE WATER: 2,720.811 acre-ft/yr

= Water Losses + Unbilled Metered + Unbilled Unmetered

SYSTEM DATA

Length of mains:	8	710.0	miles
Number of active AND inactive service connections:	8	47,987	
Service connection density:		68	conn./mile main

Are customer meters typically located at the curbstop or property line? Yes

Average length of customer service line: (length of service line, beyond the property boundary, that is the responsibility of the utility)

Average length of customer service line has been set to zero and a data grading score of 10 has been applied

Average operating pressure: 8 80.0 psi

COST DATA

Total annual cost of operating water system:	8	$27,000,000	$/Year	
Customer retail unit cost (applied to Apparent Losses):	8			
Variable production cost (applied to Real Losses):	8		$/acre-ft	☐ Use Customer Retail Unit Cost to value real losses

WATER AUDIT DATA VALIDITY SCORE:

***** YOUR SCORE IS: 78 out of 100 *****

A weighted scale for the components of consumption and water loss is included in the calculation of the Water Audit Data Validity Score

PRIORITY AREAS FOR ATTENTION:

Based on the information provided, audit accuracy can be improved by addressing the following components:

1: Volume from own sources
2: Unauthorized consumption
3: Systematic data handling errors

Water Audit Report for: Cucamonga Valley Water District
Reporting Year: 2015 | 1/2015 - 12/2015

*** YOUR WATER AUDIT DATA VALIDITY SCORE IS: 78 out of 100 ***

System Attributes:

	Apparent Losses:	990.479	acre-ft/yr
+	Real Losses:	1,212.384	acre-ft/yr
=	**Water Losses:**	**2,202.863**	acre-ft/yr
?	Unavoidable Annual Real Losses (UARL):	989.23	acre-ft/yr
	Annual cost of Apparent Losses:		
	Annual cost of Real Losses:		Valued at **Variable Production Cost**

Return to Reporting Worksheet to change this assumpiton

Performance Indicators:

Financial:	Non-revenue water as percent by volume of Water Supplied:	6.6%	
	Non-revenue water as percent by cost of operating system:	#N/A	Real Losses valued at Variable Production Cost
Operational Efficiency:	Apparent Losses per service connection per day:	18.43	gallons/connection/day
	Real Losses per service connection per day:	22.56	gallons/connection/day
	Real Losses per length of main per day*:	N/A	
	Real Losses per service connection per day per psi pressure:	0.28	gallons/connection/day/psi
	From Above, Real Losses = Current Annual Real Losses (CARL):	1,212.38	acre-feet/year
?	Infrastructure Leakage Index (ILI) [CARL/UARL]:	1.23	

* This performance indicator applies for systems with a low service connection density of less than 32 service connections/mile of pipeline

Water Audit Report for:	Cucamonga Valley Water District
Reporting Year:	2015 (1/2015 - 12/2015)
Data Validity Score:	78

Own Sources (Adjusted for known errors) 28,248.648	Water Exported 15.590	Billed Water Exported			
	Water Supplied 41,435.811	Authorized Consumption 39,232.948	Billed Authorized Consumption 38,715.000	Billed Metered Consumption (water exported is removed) 38,715.000	Revenue Water 38,715.000
				Billed Unmetered Consumption 0.000	
			Unbilled Authorized Consumption 517.948	Unbilled Metered Consumption 0.000	Non-Revenue Water (NRW) 2,720.811
				Unbilled Unmetered Consumption 517.948	
		Water Losses 2,202.863	Apparent Losses 990.479	Unauthorized Consumption 103.590	
				Customer Metering Inaccuracies 790.102	
				Systematic Data Handling Errors 96.788	
Water Imported 13,202.753			Real Losses 1,212.384	Leakage on Transmission and/or Distribution Mains Not broken down	
				Leakage and Overflows at Utility's Storage Tanks Not broken down	
				Leakage on Service Connections Not broken down	

The graphic below is a visual representation of the Water Balance with bar heights propotional to the volume of the audit components

Water Audit Report for: Cucamonga Valley Water District
Reporting Year: 2015 (1/2015 - 12/2015)
Data Validity Score: 78

○ Show me the VOLUME of Non-Revenue Water
◉ Show me the COST of Non-Revenue Water

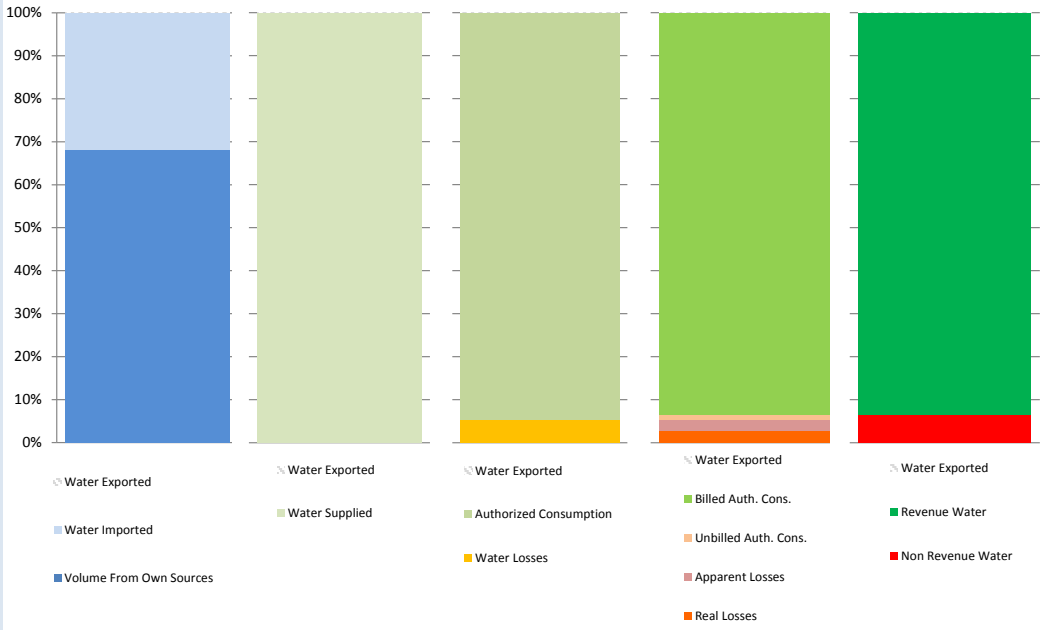

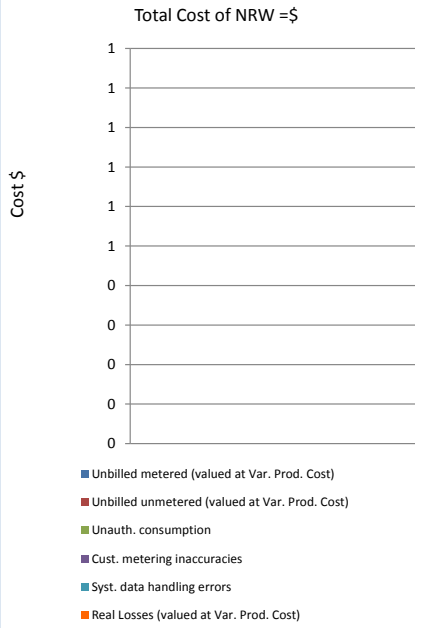

Water Audit Report for: **Cucamonga Valley Water District**
Reporting Year: **2015** **1/2015 - 12/2015**
Data Validity Score: **78**

Water Loss Control Planning Guide

Functional Focus Area	Water Audit Data Validity Level / Score				
	Level I (0-25)	**Level II** (26-50)	**Level III** (51-70)	**Level IV** (71-90)	**Level V** (91-100)
Audit Data Collection	Launch auditing and loss control team; address production metering deficiencies	Analyze business process for customer metering and billing functions and water supply operations. Identify data gaps.	Establish/revise policies and procedures for data collection	Refine data collection practices and establish as routine business process	Annual water audit is a reliable gauge of year-to-year water efficiency standing
Short-term loss control	Research information on leak detection programs. Begin flowcharting analysis of customer billing system	Conduct loss assessment investigations on a sample portion of the system: customer meter testing, leak survey, unauthorized consumption, etc.	Establish ongoing mechanisms for customer meter accuracy testing, active leakage control and infrastructure monitoring	Refine, enhance or expand ongoing programs based upon economic justification	Stay abreast of improvements in metering, meter reading, billing, leakage management and infrastructure rehabilitation
Long-term loss control		Begin to assess long-term needs requiring large expenditure: customer meter replacement, water main replacement program, new customer billing system or Automatic Meter Reading (AMR) system.	Begin to assemble economic business case for long-term needs based upon improved data becoming available through the water audit process.	Conduct detailed planning, budgeting and launch of comprehensive improvements for metering, billing or infrastructure management	Continue incremental improvements in short-term and long-term loss control interventions
Target-setting			Establish long-term apparent and real loss reduction goals (+10 year horizon)	Establish mid-range (5 year horizon) apparent and real loss reduction goals	Evaluate and refine loss control goals on a yearly basis
Benchmarking			Preliminary Comparisons - can begin to rely upon the Infrastructure Leakage Index (ILI) for performance comparisons for real losses (see below table)	Performance Benchmarking - ILI is meaningful in comparing real loss standing	Identify Best Practices/ Best in class - the ILI is very reliable as a real loss performance indicator for best in class service

For validity scores of 50 or below, the shaded blocks should not be focus areas until better data validity is achieved.

Once data have been entered into the Reporting Worksheet, the performance indicators are automatically calculated. How does a water utility operator know how well his or her system is performing? The AWWA Water Loss Control Committee provided the following table to assist water utilities is gauging an approximate Infrastructure Leakage Index (ILI) that is appropriate for their water system and local conditions. The lower the amount of leakage and real losses that exist in the system, then the lower the ILI value will be.

Note: this table offers an approximate guideline for leakage reduction target-setting. The best means of setting such targets include performing an economic assessment of various loss control methods. However, this table is useful if such an assessment is not possible.

Target ILI Range	Financial Considerations	Operational Considerations	Water Resources Considerations
1.0 - 3.0	Water resources are costly to develop or purchase; ability to increase revenues via water rates is greatly limited because of regulation or low ratepayer affordability.	Operating with system leakage above this level would require expansion of existing infrastructure and/or additional water resources to meet the demand.	Available resources are greatly limited and are very difficult and/or environmentally unsound to develop.
>3.0 -5.0	Water resources can be developed or purchased at reasonable expense; periodic water rate increases can be feasibly imposed and are tolerated by the customer population.	Existing water supply infrastructure capability is sufficient to meet long-term demand as long as reasonable leakage management controls are in place.	Water resources are believed to be sufficient to meet long-term needs, but demand management interventions (leakage management, water conservation) are included in the long-term
>5.0 - 8.0	Cost to purchase or obtain/treat water is low, as are rates charged to customers.	Superior reliability, capacity and integrity of the water supply infrastructure make it relatively immune to supply shortages.	Water resources are plentiful, reliable, and easily extracted.
Greater than 8.0	Although operational and financial considerations may allow a long-term ILI greater than 8.0, such a level of leakage is not an effective utilization of water as a resource. Setting a target level greater than 8.0 - other than as an incremental goal to a smaller long-term target - is discouraged.		
Less than 1.0	If the calculated Infrastructure Leakage Index (ILI) value for your system is 1.0 or less, two possibilities exist. a) you are maintaining your leakage at low levels in a class with the top worldwide performers in leakage control. b) A portion of your data may be flawed, causing your losses to be greatly understated. This is likely if you calculate a low ILI value but do not employ extensive leakage control practices in your operations. In such cases it is beneficial to validate the data by performing field measurements to confirm the accuracy of production and customer meters, or to identify any other potential sources of error in the data.		

APPENDIX M – 2015 SAFE YIELD RESET AGREEMENT

Appendix M

2015 Safe Yield Reset Agreement

2015 SAFE YIELD RESET AGREEMENT

WHEREAS, the Parties to this 2015 Safe Yield Reset Agreement (hereinafter, the "Agreement") are Parties or successors to Parties in *Chino Basin Municipal Water District v. City of Chino* (San Bernardino Superior Court Case No. 51010) and the Judgment in that case set the Safe Yield of the Chino Basin at 140,000 acre-feet per year (AFY), but reserved continuing jurisdiction to the Court to amend the Judgment, inter alia, to redetermine the Safe Yield after the first 10 years of operation of the Physical Solution established under the Judgment;

WHEREAS, the Parties to the Judgment have executed; and Watermaster, with the advice and consent of the Pools and Advisory Committees, has endorsed; and the Court has approved, the following agreements to implement the Physical Solution ("Court Approved Management Agreements"):

[1] the Chino Basin Peace Agreement, dated June 29, 2000, as subsequently amended in September 2004 and December 2007;

[2] the Peace II Measures (Court approved on December 21, 2007);

[3] the OBMP Implementation Plan dated June 29, 2000, as supplemented in December 2007;

[4] the Recharge Master Plan, dated 1998, as updated in 2010 and amended in 2013;

[5] the Watermaster Rules and Regulations dated June 2000, as amended;

[6] the October 8, 2010 Order Approving Watermaster's Compliance with Condition Subsequent Number Eight and Approving Procedures to be used to Allocated Surplus Agricultural Pool Water in the Event of a Decline in Safe Yield and

[7] Watermaster Resolution 2010-04 ("Resolution of the Chino Basin Watermaster regarding Implementation of the Peace II Agreement and the Phase III Desalter Expansion in Accordance with the December 21, 2007 Order of the San Bernardino Superior Court);

WHEREAS, the parties to this Agreement have reviewed evidence that the conditions affecting the Safe Yield of the Basin have changed since the Judgment was entered in 1978 and evidence supporting reset of the Safe Yield of the Basin to 135,000 AFY;

WHEREAS, questions have arisen concerning the interpretation and implementation of the Judgment and the Court Approved Management Agreements, and the Parties to this Agreement intend to address those questions and settle their

disputes and compromise their respective claims as to the subject matter set forth herein as expressly provided for in this Agreement;

WHEREAS, the Parties intend this Agreement to be consistent with, and further the implementation of, the Judgment and the Court Approved Management Agreements. The terms of this Agreement shall not constitute an amendment to the Judgment or the Court Approved Management Agreements, but shall be construed and implemented consistently with the Judgment and Court Approved Management Agreements; and

NOW, THEREFORE, in consideration of the mutual promises specified herein and by conditioning their performance under this Agreement upon the conditions precedent set forth in Article 2 herein, and for other good and valuable consideration, the Parties agree as follows:

ARTICLE 1
DEFINITIONS AND RULES OF CONSTRUCTION

1.1 Definitions.

(a) "2001-2014 Stormwater Recharge Program" means those specific recharge projects that were previously approved and initiated by Watermaster during production years 2001-2014 (e.g., Chino Basin Facilities Improvement Plan, and Chino Basin Facilities Improvement Plan II). The 2001-2014 Stormwater Recharge Program does not include projects identified in the 2013 Amendment to the 2010 Recharge Master Plan Update.

(b) "Advisory Committee" shall have the meaning as used in the Judgment for the Advisory Committee.

(c) "Agricultural Pool" shall have the meaning of Overlying (Agricultural) Pool as used in the Judgment and shall include all its members.

(d) "Appropriative Pool" shall have the meaning as used in the Judgment and shall include all its members.

(e) "Assessment Package" means Watermaster's annual report of that title, which summarizes allocations of Production rights, Production, and related data (e.g., water transfers, storage accounting) relative to the previous Production Year. Based on this information, the report includes the calculation of each Party's share of Assessments for the applicable fiscal year's Watermaster-approved budget.

(f) "Best Efforts" means reasonable diligence and reasonable efforts under the totality of the circumstances. Indifference and inaction do not constitute Best Efforts. Futile action(s) are not required.

(g) "Chino Basin" or "Basin" means the groundwater basin underlying the area shown on Exhibit "B" to the Judgment and within the boundaries described on Exhibit "K" to the Judgment.

(h) "Desalter" and "Desalters" means the Chino I Desalter, Chino I Desalter Expansion, the Chino II Desalter and Future Desalters, consisting of all the capital facilities and processes that remove salt from Basin Water, including extraction wells, transmission facilities for delivery of groundwater to the Desalter, Desalter treatment and delivery facilities for the Desalter water including pumping and storage facilities, and treatment and disposal capacity in the SARI System.

(i) "Effective Date" means the date upon which all conditions precedent, described in Article 2.1, are satisfied.

(j) "Hydraulic Control" means the reduction of groundwater discharge from the Chino North Management Zone to the Santa Ana River to *de minimus* quantities. The Chino North Management Zone is defined in the 2004 Basin Plan Amendment (RWQCB resolution R8-2004-001) attached to the Peace II Agreement as Exhibit "B."

(k) "Material Physical Injury" means material injury that is attributable to the Recharge, Transfer, storage and recovery, management, movement or Production of water, or implementation of the OBMP, including, but not limited to, degradation of water quality, liquefaction, land subsidence, increases in pump lift (lower water levels) and adverse impacts associated with rising groundwater. Material Physical Injury does not include "economic injury" that results from other than physical causes. Once fully mitigated, physical injury shall no longer be considered to be material.

(l) "Net New Recharge" means the stormwater recharge caused by the implementation of a Post-2014 Stormwater Recharge Project, upon its construction and operation, less the decrease in recharge at stormwater recharge projects existing at the time of implementation, which decrease is attributable to the new projects.

(m) "New Yield" means proven increases in yield in quantities greater than historical amounts from sources of supply including, but not limited to, capture of rising water, capture of available storm flow, operation of the Desalters (including the Chino I Desalter), induced Recharge and other management activities implemented and operational after June 1, 2000.

(n) "Non-Agricultural Pool" shall have the meaning as used in the Judgment for the Overlying (Non-Agricultural) Pool and shall include all its members.

(o) "Operating Safe Yield" means the annual amount of groundwater which Watermaster shall determine, pursuant to criteria specified in Exhibit "I" to the Judgment, can be Produced from Chino Basin by the Appropriative Pool parties free of Replenishment obligation under the Physical Solution. Watermaster shall include any New Yield in determining Operating Safe Yield.

(p) "Participation Share" means a member of the Appropriative Pool's prescribed share of the potential Post-2014 Stormwater Recharge Project Net New Recharge benefits and corresponding financial obligations.

(q) "Party" means a party to this Agreement.

(r) "Party to the Judgment" means a party to the Judgment regardless of whether it has executed this Agreement.

(s) "Physical Solution" shall have the meaning of Physical Solution as described in the Judgment.

(t) "Post-2014 Stormwater Recharge Program" means a suite of Post-2014 Stormwater Recharge Projects that are considered together for approval and initiation.

(u) "Post-2014 Stormwater Recharge Project" means a stormwater recharge project, including the improvement of a previously existing project, that was not in existence in Production Year 2014 but is approved and initiated thereafter (i.e., a project other than those within the 2001-2014 Stormwater Recharge Program) and is included within a Post-2014 Stormwater Recharge Program.

(v) "Produce" or "Produced" means to pump or extract groundwater from the Chino Basin.

(w) "Production" means the annual quantity, stated in acre-feet, of water Produced from the Chino Basin.

(x) "Production Year" means the fiscal year, July 1 through June 30 following, for which Production and related data are used to calculate the Assessment Package of the following year.

(y) "Re-Operation" means the controlled overdraft of the Basin by the managed withdrawal of groundwater Production for the Desalters

and the potential increase in the cumulative un-replenished Production from 200,000 acre-feet authorized by Paragraph 3 of the Engineering Appendix attached as Exhibit "I" to the Judgment, to 600,000 acre-feet for the express purpose of securing and maintaining Hydraulic Control as a component of the Physical Solution.

(z) "Reset Technical Memorandum" means the memorandum attached hereto and incorporated herein as Exhibit "A," which sets forth the methodology pursuant to which the Safe Yield is evaluated or reset.

(aa) "Safe Yield" shall have the meaning of Safe Yield as used in the Restated Judgment.

(bb) "Safe Storage Reserve" shall mean the 130,000 AF reserve composed of stored water held in the non-Supplemental Water storage accounts of individual members of the Appropriative Pool, that may be conditionally accessed as described in Paragraph 6.2 of this Agreement.

(cc) "Storage Management Plan" shall mean a long-term plan for ensuring that, consistent with Program Elements 8 and 9 of the Optimum Basin Management Program Implementation Plan and section 5.2 of the Peace Agreement, use of the Basin's Safe Storage Capacity, as defined in the Optimum Basin Management Program Implementation Plan, is safe, sustainable, and will not cause Material Physical Injury or undesirable results.

(dd) "Supplemental Water" includes both water imported to Chino Basin from outside Chino Basin Watershed and reclaimed water.

(ee) Unless otherwise expressly provided herein, all definitions set forth in the Peace Agreement, the Peace II Agreement, and the Restated Judgment are applicable to the terms as they are used herein.

1.2 Rules of Construction.

(a) Unless the context clearly requires otherwise:

(i) The plural and singular forms include the other;

(ii) "Shall," "will," "must," and "agrees" are each mandatory;

(iii) "May" is permissive;

(iv) "Or" is not exclusive;

(v) "Includes" and "including" are not limiting; and

(vi) "Between" includes the ends of the identified range.

(b) Headings at the beginning of Articles, Paragraphs and Subparagraphs of this Agreement are solely for the convenience of the Parties, are not a part of this Agreement and shall not be used in construing it.

(c) The masculine gender shall include the feminine and neuter genders and vice versa.

(d) The word "person" shall include individual, partnership, corporation, limited liability company, business trust, joint stock company, trust, unincorporated association, joint venture, governmental authority, water district and other entity of whatever nature.

(e) Reference to any agreement (including this Agreement), document, or instrument means such agreement, document, instrument as amended or modified and in effect from time to time in accordance with the terms thereof and, if applicable, the terms thereof.

(f) Except as specifically provided herein, reference to any law, statute or ordinance, regulation or the like means such law as amended, modified, codified or reenacted, in whole or in part and in effect from time to time, including any rules and regulations promulgated thereunder.

(g) In the event of a conflict between this Agreement and the Judgment, the Judgment shall prevail. The terms of the Peace Agreement, Peace II Agreement, and this Agreement shall be construed as an integrated set of agreements; but, where the subject matter of this Agreement expressly provides guidance, direction, construction, or interpretation, those terms of this Agreement shall prevail.

1.3 Incorporation of Recitals and Exhibits. The Recitals set forth above are incorporated in this Agreement and made a part hereof. All exhibits attached hereto are incorporated by this reference as though fully stated herein.

1.4 Reservation of Discretion. Execution of this Agreement is not intended to commit any Party to undertake a project without compliance with CEQA or to commit the Parties individually or collectively to any specific course of action, which would result in the present approval of a future project.

1.5 Commitments are Consistent with CEQA. The Parties acknowledge and agree that this Agreement provides for the further administration of the Judgment by

Watermaster following the reset of the Safe Yield, pursuant to the Court's continuing jurisdiction, and that no commitment is being made to carry out any "project" within the meaning of CEQA unless and until the environmental review and assessment that may be required by CEQA for that defined "project" have been completed.

ARTICLE 2
CONDITIONS PRECEDENT

2.1 Performance under Articles 3 through 10 is Subject to Satisfaction of the Conditions Precedent. Each Party's obligations under this Agreement are subject to the satisfaction of the following conditions precedent on or before the dates specified below, unless satisfaction of a specified condition is waived in writing by all other Parties;

(a) Watermaster approval of Resolution 2015-06 in the form attached hereto as Exhibit "F", including the following Attachments thereto:

(i) 2015 Safe Yield Reset Agreement;

(ii) Proposed Order amending Paragraph 6 of the Restated Judgment; and

(iii) Amended schedule for access to Re-Operation water.

(b) Court orders:

(i) Amending Paragraph 6 of the Restated Judgment, as shown in Exhibit "B" to Resolution 2015-06, to provide that the Safe Yield of the Chino Basin is 135,000 acre feet per year;

(ii) Amending the schedule for access to Re-Operation water as shown in Exhibit "C" to Resolution 2015-06; and

(iii) Directing Watermaster to proceed in accordance with the terms of the Agreement on Redetermination and Reset of Safe Yield, as embodied in Resolution 2015-06.

ARTICLE 3
MUTUAL ACKNOWLEDGEMENT AND COVENANTS

3.1 Acknowledgment of Safe Yield Reset. The collective actions of Watermaster set forth in Watermaster Resolution 2015-06 and the Attachments thereto constitute further actions by Watermaster in implementing the OBMP Implementation Plan and administration of the Judgment post-reset in accordance with the Judgment

3.2 Non-Opposition. No Party shall oppose Watermaster's administration of the Judgment as set forth in this Agreement. Notwithstanding this covenant, no Party shall be limited in its right of participation in all functions of Watermaster as they are provided in the Judgment nor shall a Party to the Judgment be precluded from seeking judicial review (i) of Watermaster actions not related to this Agreement; or (ii) to determine the consistency of Watermaster actions with this Agreement, pursuant to the Judgment or as otherwise provided in this Agreement.

3.3 Consent to Amendments. Each Party expressly consents to the amendment of Paragraph 6 of the Restated Judgment and to the amendment to the schedule for access to Re-Operation water set forth in Watermaster's Resolution 2015-06.

3.4 Stewardship. Each of the Parties acknowledges its individual duty and the collective stewardship obligation of all Parties to the Judgment to manage the precious water resources of this State, and, more specifically, all waters of the Chino Basin, in accordance with the Constitutional requirements set forth in Article X, section 2 of the California Constitution, which states, in part:

> It is hereby declared that because of the conditions prevailing in this State the general welfare requires that the water resources of the State be put to beneficial use to the fullest extent of which they are capable, and that the waste or unreasonable use or unreasonable method of use of water be prevented, and that the conservation of such waters is to be exercised with a view to the reasonable and beneficial use thereof in the interest of the people and for the public welfare.

The Parties will exercise their best efforts toward the optimization of groundwater management in the Basin to ensure the maximum reasonable and beneficial use thereof.

3.5 Supplemental Water Recharge. The Parties acknowledge the obligations of Watermaster, pursuant to Peace Agreement sections 5.1 and Peace II Agreement section 8.4, to exercise Best Efforts to direct Recharge relative to Production in each area and sub-area of the Basin to achieve and maintain long term balance between total Recharge and discharge and to promote the goal of equal access to groundwater within all areas and sub-areas of the Basin, and to direct wet water Supplemental Water recharge to Management Zone 1 in an amount equal to or greater than 6,500 AFY.

ARTICLE 4
SAFE YIELD RESET

4.1 Safe Yield Reset. Consistent with the prior orders of the Court pursuant to its continuing jurisdiction, effective July 1, 2010 and continuing until June 30, 2020,

the Safe Yield for the Basin is reset at 135,000 AFY. For all purposes arising under the Judgment, the Peace Agreement(s) and the OBMP Implementation Plan, the Safe Yield shall be 135,000 AFY, without exception, unless and until Safe Yield is reset in accordance with the procedures set forth in this Article 4, and determined by the Court pursuant to its retained continuing jurisdiction. Any reduction in Safe Yield pursuant to Paragraph 5.2(b), below, shall be a reduction from this 135,000 AFY.

4.2 Scheduled Reset. Watermaster will initiate a process to evaluate and reset the Safe Yield by July 1, 2020 as further provided herein. Subject to the provisions of Paragraph 4.3 below, the Safe Yield, as it is reset effective July 1, 2020 will continue until June 30, 2030. Watermaster will initiate the reset process no later than January 1, 2019, in order to ensure that the Safe Yield, as reset, may be approved by the Court no later than June 30, 2020. Consistent with the provisions of the OBMP Implementation Plan, thereafter, Watermaster will conduct a Safe Yield evaluation and reset process no less frequently than every ten years. This Paragraph is deemed to satisfy Watermaster's obligation, under Paragraph 3.(b) of Exhibit "I" to the Restated Judgment, to provide notice of a potential change in Operating Safe Yield.

4.3 Interim Correction. In addition to the scheduled reset set forth in Paragraph 4.2 above, the Safe Yield may be reset in the event that, with the recommendation and advice of the Pools and Advisory Committee and in the exercise of prudent management discretion described in Paragraph 4.5(c), below, Watermaster recommends to the Court that the Safe Yield must be changed by an amount greater (more or less) than 2.5% of the then-effective Safe Yield.

4.4 Safe Yield Reset Methodology. The Safe Yield has been reset effective July 1, 2010 and shall be subsequently evaluated pursuant to the methodology set forth in the Reset Technical Memorandum attached hereto and incorporated herein as Exhibit "A". The reset will rely upon long-term hydrology and will include data from 1921 to the date of the reset evaluation. The long-term hydrology will be continuously expanded to account for new data from each year, through July 2030, as it becomes available. This methodology will thereby account for short-term climatic variations, wet and dry. Based on the best information practicably available to Watermaster, the Reset Technical Memorandum sets forth a prudent and reasonable professional methodology to evaluate the then prevailing Safe Yield in a manner consistent with the Judgment, the Peace Agreements, and the OBMP Implementation Plan. In furtherance of the goal of maximizing the beneficial use of the waters of the Chino Basin, Watermaster, with the recommendation and advice of the Pools and Advisory Committee, may supplement the Reset Technical Memorandum's methodology to incorporate future advances in best management practices and hydrologic science as they evolve over the term of this Agreement.

4.5 Annual Data Collection and Evaluation. In support of its obligations to undertake the reset in accordance with the Reset Technical Memorandum, Watermaster shall annually undertake the following actions:

(a) Ensure that, unless a Party to the Judgment is excluded from reporting, all production by all Parties to the Judgment is metered, reported, and reflected in Watermaster's approved Assessment Packages;

(b) Collect data concerning cultural conditions annually, with cultural conditions including, but not limited to, land use, water use practices, production, and facilities for the production, generation, storage, recharge, treatment, or transmission of water;

(c) Evaluate the potential need for prudent management discretion to avoid or mitigate undesirable results including, but not limited to, subsidence, water quality degradation, and unreasonable pump lifts. Where the evaluation of available data suggests that there has been or will be a material change from existing and projected conditions or threatened undesirable results, then a more significant evaluation, including modeling, as described in the Reset Technical Memorandum, will be undertaken; and,

(d) As part of its regular budgeting process, develop a budget for the annual data collection, data evaluation, and any scheduled modeling efforts, including the methodology for the allocation of expenses among the Parties to the Judgment. Such budget development shall be consistent with section 5.4(a) of the Peace Agreement.

4.6 Modeling. Watermaster shall cause the Basin Model to be updated and a model evaluation of Safe Yield, in a manner consistent with the Reset Technical Memorandum, to be initiated no later than January 1, 2024, in order to ensure that the same may be completed by June 30, 2025.

4.7 Peer Review. The Pools shall be provided with reasonable opportunity, no less frequently than annually, for peer review of the collection of data and the application of the data collected in regard to the activities described in Paragraphs 4.4, 4.5, and 4.6 above.

4.8 No Retroactive Accounting. Notwithstanding that the initial Safe Yield reset, described in Paragraph 4.1, above, shall be effective as of July 1, 2010, Watermaster will not, in any manner, including through the approval of its Assessment Packages, seek to change prior accounting of the prior allocation of Safe Yield and Operating Safe Yield among the Parties to the Judgment for production years prior to July 1, 2014.

ARTICLE 5
WATERMASTER ACCOUNTING

5.1 Stormwater Recharge. After the Effective Date and until termination of this Agreement, the Parties expressly consent to Watermaster's accounting for Basin recharge arising from stormwater as follows:

(a) 2001-2014 Stormwater Recharge Program. Stormwater recharge that arises from or is attributable to the 2001-2014 Stormwater Recharge Program shall be: (i) New Yield for the period 2001-2014 in the manner that it has been distributed through approved Watermaster Assessment Packages; and (ii) Safe Yield in each subsequent year. For the 2001-2014 Stormwater Recharge Program, Watermaster shall cause no reduction against Safe Yield requiring supplementation by the reallocation of a portion of the unproduced Overlying (Agricultural) Pool's share of the Basin's Safe Yield.

(b) Post-2014 Stormwater Recharge Projects. For the remainder of the term of the Peace Agreement, inclusive of an extension term, if any, stormwater recharge that arises from or is attributable to Post-2014 Stormwater Recharge Projects shall be allocated as set forth in this Paragraph 5.1(b).

(i) Interim Accounting Between Resets. For any and all Post-2014 Stormwater Recharge Projects completed in the interim periods between subsequent Safe Yield resets, Net New Recharge attributable to specific Post-2014 Stormwater Recharge Projects shall be New Yield, as that term is defined in the Peace Agreement and will be allocated based upon observed and quantified annual net-increases rather than projected future estimates of annual performance. New Yield attributable to Post-2014 Stormwater Recharge Projects shall be credited annually to the Project participants, in the Production Year in which such New Yield actually arises. Post-2014 Stormwater Recharge Project New Yield is in addition to Safe Yield and therefore by definition it shall cause no reduction against Safe Yield requiring supplementation by the reallocation of a portion of the unproduced Overlying (Agricultural) Pool's share of the Basin's Safe Yield.

(ii) Post-Safe Yield Reset Accounting for Post-2014 Stormwater Recharge Projects. Upon any reset of the Safe Yield after 2015, any Net New Recharge that occurs

as a result of specific Post-2014 Stormwater Recharge Projects that have been previously approved and fully implemented at the time of the reset shall be considered as a potential change in cultural conditions as provided in the Reset Technical Memorandum and thereafter considered a component of the Safe Yield if the Post-2014 Stormwater Recharge Projects to which the Net New Recharge is attributable have been constructed and in operation for a minimum of five (5) years prior to the reset. The Net New Recharge will be measured and accounted for and will be made available exclusively to the members of the Appropriative Pool in accordance with Paragraph 5.1(c) below. Following a reset of the Safe Yield, Post-2014 Stormwater Recharge Project recharge will be included within Safe Yield and its separate measurement and allocation shall cause no reduction against Safe Yield requiring supplementation by the reallocation of a portion of the unproduced Overlying (Agricultural) Pool's share of the Basin's Safe Yield. Moreover, Post-2014 Stormwater Recharge Projects that have been fully constructed and in operation for less than five (5) years or the Net New Recharge from which is otherwise not included as a component of Safe Yield pursuant to the Reset Technical Memorandum, will be treated "as if" the Net New Recharge were Safe Yield for the limited and exclusive purpose of quantifying the annual supplementation by the reallocation of a portion of the unproduced Overlying (Agricultural) Pool's share of the Basin's Safe Yield. To assist the Parties to the Agreement in their understanding of this section, examples of how Watermaster will conduct the accounting described in this Section 5.1(b)(ii) are included in Exhibit "B" hereto.

(c) Participation in Post-2014 Stormwater Recharge Programs. The Parties contemplate that Post-2014 Stormwater Recharge Projects, such as those projects described in Watermaster's Court-approved 2013 Amendment to 2010 Recharge Master Plan Update, may be completed after the Effective Date, as part of suites of such Projects (each suite of Projects, a "Post-2014 Stormwater Recharge Program" and collectively, "Post-2014 Stormwater Recharge Programs"). Watermaster shall prepare an estimate of the Net New Recharge projected to arise from or be attributable to proposed Post-2014 Stormwater Recharge Programs. Based on this pre-approval estimate, Watermaster shall quantify each member of the Appropriative Pool's

proportionate share of the potential Net New Recharge benefits in accordance with its percentage of Operating Safe Yield and calculate its corresponding capital financing obligations. Each Appropriative Pool member's proportionate share of the potential Program Net New Recharge benefits and corresponding financing obligations shall be referred to as its "Participation Share" in the Program. The Participation Shares in a particular Program shall remain unchanged regardless of actual Program yield. Within six months of the Effective Date, Watermaster, with the recommendation and advice of the Pools and Advisory Committee, will develop rules and regulations for the definition of Post-2014 Stormwater Programs and Participation Shares therein.

Any member of the Appropriative Pool may elect, in its discretion, not to participate in certain Post-2014 Stormwater Recharge Programs. In the case a member of the Appropriative Pool has cast a final vote against an approved Post-2014 Stormwater Recharge Program, then that member may elect, in its complete discretion, to opt out of its Participation Share, by providing written notice to the members of the Appropriative Pool, within ninety (90) days of the approval of the Post-2014 Stormwater Recharge Program. Notice shall be provided through a request that the election be placed on the agenda of a regularly scheduled meeting of the Appropriative Pool, and offering the other members of the Appropriative Pool the right to assume its respective Participation Share of stormwater recharge New Yield or Safe Yield attributable to the Post-2014 Stormwater Recharge Program, along with the Pool member's assumption of all applicable rights and responsibilities.

(i) In the event that one or more members of the Appropriative Pool voting against the approval of a Post-2014 Stormwater Recharge Program elects to opt out of its Participation Share therein, each shall permanently waive and relinquish, without limitation, all right to all the benefits accruing under its Participation Share of a Post-2014 Stormwater Recharge Program;

(ii) An Appropriative Pool member electing to opt out of participation in a Post-2014 Stormwater Recharge Program shall be assigned no further financial obligation attributable to a Participation Share in the Post-2014 Stormwater Recharge Program that was the subject of the election;

(iii) Fontana Water Company (FWC), a member of the Appropriative Pool, and any successor in interest thereto, shall have the first priority and exclusive right and obligation to acquire the Participation Shares, representing up to 2,000 AFY (cumulative maximum) of projected annual average recharge arising from or attributable to one or more Post-2014 Stormwater Recharge Programs, which may be made available by one or more members of the Appropriative Pool opting out of the Post-2014 Stormwater Recharge Programs. If Participation Shares in Post-2014 Stormwater Recharge Programs are available in excess of FWC's first priority right of up to 2,000 AFY under this provision, then each member of the Appropriative Pool may elect to participate in the acquisition of the excess Participation Shares along with its corresponding assumption of duties associated therewith. Available Participation Shares shall be distributed among the members of the Appropriative Pool electing to acquire the Participation Shares, pro rata based on the total number of members electing to acquire, including FWC. The acquisition of any obligations and benefits pursuant to this Paragraph shall survive the expiration of the Peace Agreement, for the life of the Post-2014 Stormwater Recharge Program, pursuant to the same terms and conditions generally applicable to all Project Participants.

(iv) FWC shall have a right of first refusal (ROFR) as to any transfer, lease, or assignment (collectively "transfer") of any portion of a Participation Share by any member of the Appropriative Pool until a cumulative maximum of 2,000 AFY of Participation Shares has been acquired by FWC. Any member of the Appropriative Pool desiring to transfer any portion of its Participation Share will provide sixty (60) days written notice of its intention to transfer to FWC along with a copy of any agreement and accompanied by a reasonable description of the transfer. Upon its receipt of written notice, FWC may, in its complete discretion, elect to match the offer and the Appropriative Pool member providing its notice of intention to transfer must sell the identified Participation Shares. After FWC has acquired a cumulative total of 2,000 AFY of Participation Shares, its right to share in Post-2014 Stormwater Recharge Programs shall be limited to the provisions of Paragraph 5.1(c)(iii) above. FWC's ROFR, as described in this

Section 5.1(c)(iv), shall be limited only to those transfers as to which the City of Ontario is not the proposed transferee.

5.2 Desalter-Induced Recharge. After the Effective Date and until termination of this Agreement, the Parties expressly consent to Watermaster's accounting for Basin recharge arising from or attributable the Desalters as follows:

(a) 2001-2014 Desalter-Induced Recharge. Induced recharge that arises from or is attributable to the Desalters for the period of production years 2001-2014 shall be accounted for as Safe Yield, in the manner it has been distributed through approved Watermaster Assessment Packages, shall not be considered New Yield, and shall not be considered to have been available for production by the Desalters.

(b) 2015-2030 Desalter-Induced Recharge. For the production years of 2015- 2030, Watermaster shall account for induced recharge that arises from or is attributable to the Desalters as equal to fifty (50) percent of the total Desalter Production during each applicable production year up to a maximum of twenty-thousand (20,000) AFY of recharge. Consistent with Paragraph 6.2(a)(iii) of the Peace II Agreement, Watermaster shall deem the induced recharge as having been produced by the Desalters. During each applicable production year, Watermaster shall reduce Safe Yield by an amount equal to fifty (50) percent of the total Desalter Production, up to a maximum of twenty-thousand (20,000) AFY, and require a corresponding supplementation by the reallocation of available unproduced Agricultural Pool's share of the Basin's Safe Yield.

Claims for reallocation of the remaining unproduced quantity of the Agricultural Pool's share of Safe Yield shall be satisfied consistent with section 6.3(c) of Watermaster's Rules and Regulations, as amended as part of the Peace II Measures, and the October 8, 2010 Order Approving Watermaster's Compliance with Condition Subsequent Number Eight and Approving Procedures to be used to Allocated Surplus Agricultural Pool Water in the Event of a Decline in Safe Yield.

(c) 2031-2060 Desalter-Induced Recharge. Should the term of the Peace Agreement be extended pursuant to Paragraph 8.4 thereof, the treatment of Desalter-Induced Recharge shall be subject to the negotiation of a new and separate agreement among the Parties to the Judgment. The accounting provided for in Section 5.2(b), above, shall be without prejudice to the

negotiation of such a new and separate agreement among the Parties to the Judgment. Unless otherwise agreed by the Parties, during the extension term, Watermaster shall not consider such recharge to require supplementation by the reallocation of a portion of the unproduced Agricultural Pool's share of Safe Yield.

5.3 Post-2030 Priority among Land Use Conversion and Early Transfer Claims. At the expiration of the Peace II Agreement, the Peace II provisions relating to the distribution of surplus (unpumped) water by the Agricultural Pool requiring that claims for the Early Transfer of 32,800 AFY and for Land Use Conversion be treated equally are expressly repealed, including (i) the amendment to Section 6.3(c) of Watermaster's Rules and Regulations, pursuant to the Peace II measures, and (ii) Section III.(6) of the October 8, 2010 Order Approving Watermaster's Compliance with Condition Subsequent Number Eight and Approving Procedures to be used to Allocate Surplus Agricultural Pool Water in the Event of a Decline in Safe Yield. In any Peace Agreement extension term, the previous changes to Restated Judgment, Exhibit "H", Paragraph 10(b)(3)(i) effectuated by Paragraph 4.4(c) of the Peace Agreement, which, to the extent sufficient unallocated Safe Yield from the Agricultural Pool is available for conversion claims, allocate 2.0 acre-feet of unallocated Safe Yield water for each converted acre, shall remain in effect.

ARTICLE 6
SAFE STORAGE MANAGEMENT

6.1 Safe Storage Management. The following measures ensure that withdrawals of groundwater from authorized storage accounts within the Basin are safe, sustainable, and will not cause Material Physical Injury or undesirable results.

6.2 Safe Storage Reserve. A Safe Storage Reserve is established in the amount of one hundred thirty thousand (130,000) AF. This quantity is sufficient to ensure protection against a precipitous drop in water levels, undesirable results, and Material Physical Injury while a Storage Management Plan is developed by the Parties.

(a) The Safe Storage Reserve shall be composed of water in the non-Supplemental Water stored water accounts of members of the Appropriative Pool, apportioned among them in accordance with their relative percentages of their quantity of non-Supplemental Water held in groundwater storage on July 1, 2015, consistent with the illustration shown in Exhibit "C," attached hereto, which utilizes existing July 1, 2014 information. Watermaster will update Exhibit "C" and distribute the final table when the quantities of non-Supplemental water held in groundwater storage on July 1, 2015 become available. For the avoidance of doubt, the Safe

Storage Reserve shall not include water in the non-Supplemental Water stored water accounts of members of the Non-Agricultural Pool.

(b) Watermaster shall annually report, in its Assessment Package, the quantity of water in non-Supplemental stored water accounts of the members of the Appropriative Pool. In any production year in which Watermaster determines that less than one hundred fifty thousand (150,000) AF exist in non-supplemental stored water accounts, each member of the Appropriative Pool shall maintain a stored water balance in their non-supplemental stored water accounts in an amount equal to or greater than the quantity set forth in Exhibit "C" by the close of that production year.

(i) Watermaster will provide written notice to the Chair of the Appropriative Pool within thirty (30) days of its determination that the cumulative quantity of non-supplemental stored water is less than one hundred fifty thousand (150,000) AF.

(ii) Members of the Appropriative Pool shall not be restricted in their transactions (withdrawals and transfers to and from storage) unless and until Watermaster has provided notice of its determination that the cumulative quantity of non-supplemental stored water is less than one hundred fifty thousand (150,000) AF. Thereafter, and until quantities of non-supplemental stored water again exceed 150,000 AF, withdrawals from non-supplemental storage shall be subject to the provisions of Paragraph 6.1(c) below.

If, within 24 months of the Effective Date, the Court has not approved a Storage Management Plan pursuant to Paragraph 6.3, below, Watermaster, with the recommendation and advice of the Pools and Advisory Committee, will develop rules and regulations for the administration of its obligations under this Paragraph 6.2(b).

(c) Withdrawals from Safe Storage Reserve. Members of the Appropriative Pool may make temporary withdrawals from their portions of the Safe Storage Reserve, in the event of an emergency, and permanent withdrawals for Desalter Replenishment as set forth below:

(i) Emergency. Each member of the Appropriative Pool shall be allowed to temporarily withdraw a quantity equal to 10/13 of its portion of the Safe Storage Reserve in the event that the member of the Appropriative Pool has made a finding, in its discretion, pursuant to Water Code section 350 or other applicable law, that the ordinary demands and requirements of its customers cannot be satisfied by its other supplies such that, without access to this water, it would have insufficient supplies for human consumption, sanitation, and fire protection. The availability of water for withdrawal pursuant to this provision is expressly conditioned upon the full replenishment, at the member's expense, of any temporary withdrawals within thirty six (36) months of the withdrawal, and upon a Watermaster finding that the withdrawal will not result in Material Physical Injury or undesirable results, consistent with the methodology defined in Exhibit "E" hereto.

(ii) Withdrawal for Desalter Replenishment. After 2024, each member of the Appropriative Pool shall be allowed to withdraw a quantity equal to 3/13 of its portion of the Safe Storage Reserve for the exclusive purpose of replenishment of Desalter production, consistent with Peace II Agreement section 6.2, Watermaster Resolution 2010-04, dedication to Desalter Replenishment in furtherance of the OBMP Implementation Plan and the maintenance of Hydraulic Control. Any such withdrawal of this water is conditioned upon a Watermaster finding that the withdrawal will not result in Material Physical Injury or undesirable results, consistent with the methodology defined in Exhibit "E" hereto.

(d) The provisions of this Paragraph 6.2 shall remain in effect only until the Court has approved a Storage Management Plan pursuant to Paragraph 6.3, below.

6.3 Development of Storage Management Plan. Within twenty four (24) months of the Effective Date, the Appropriative Pool, in coordination with other interested Pools and Parties to the Judgment, will exercise Best Efforts to develop and recommend, a Storage Management Plan to Watermaster and the Court for approval. Each of the Agricultural Pool Committee, the Non-Agricultural Pool Committee and the Appropriative Pool Committee must approve any Storage Management Plan before it may be presented to the Watermaster, provided that, at any time after exercising good faith and undertaking Best Efforts to reach a mutually acceptable agreement within one year from the initiation of negotiations, any Pool may submit

its proposal to Watermaster, and then to the Court, for review and approval. Pending the Court's approval of a Storage Management Plan, applications for the recharge, storage, and recovery of Supplemental Water will be administered in accordance with the Court Approved Management Agreements.

6.4 Storage Losses. After the Effective Date and until termination of this Agreement, consistent with Exhibit "D" hereto, the "Post-Hydraulic Control uniform loss percentage of less than 1 percent," as that terminology is used in Peace II Agreement 7.4(b), shall be a uniform annual storage loss of 0.07 percent. Storage losses for storage accounts held by persons other than Parties to the Judgment, if any, will be consistent with the requirements of the Peace Agreements. This Paragraph 6.4 shall have no effect on any agreements, in existence at the Effective Date, that provide for the exemption from storage losses of specific quantities of water resident in the Basin.

ARTICLE 7
SETTLEMENT AND RESERVATION OF RIGHTS

7.1 Settlement. By execution of this Agreement, the Parties mutually and irrevocably fully settle their respective claims, rights and obligations, whatever they may be, regarding the timing and methodology of the 2015 Safe Yield Reset, and Watermaster's past and future accounting practices consistent with this Agreement for the apportionment of Basin recharge resulting from 2001-2014 Stormwater Recharge Program, Post-2014 Stormwater Recharge Projects, and Desalter-Induced Recharge.

7.2 Reservation of Rights: General. Nothing herein shall be construed as precluding any Party to the Judgment from seeking judicial review of any Watermaster action on the grounds that Watermaster has failed to act in accordance with the Peace Agreement as amended, the Peace II Agreement, this Agreement, the Amended Judgment, the OBMP Implementation Plan as amended, and applicable law.

7.3 Reservation of Rights: Desalter Replenishment. The Parties expressly reserve their respective rights and remedies arising from the Judgment and the Peace Agreements, whatever they may be, to pursue, promote, design, plan, finance and implement Desalter Replenishment in furtherance of the OBMP Implementation Plan and to allocate costs attributable thereto. Notwithstanding this reservation, the Parties expressly waive their right to seek a re-evaluation of Desalter Replenishment arising from Paragraph 6.2(b) of the Peace II Agreement.

The rights and obligations of the Parties regarding Replenishment Assessments attributable to all Desalters in any renewal term of the Peace Agreement are subject to the negotiation of a new and separate agreement among the Parties to the Judgment.

ARTICLE 8
TERM

8.1 Commencement. This Agreement will become effective upon the satisfaction of all conditions precedent and shall expire on its termination, as described in Paragraph 8.2, below.

8.2 Termination. This Agreement is coterminous with of the term of the Peace Agreement, including any extension thereto, and will expire of its own terms and terminate on the date of the Peace Agreement.

8.3 Survival. Paragraphs 5.1(b)(ii) and 5.1(c) shall survive termination of this agreement.

ARTICLE 9
DISPUTE RESOLUTION

9.1 Scope of Dispute Resolution. Disputes (Disputes) between the Parties other than those constituting an "Exclusion" (defined below), shall be subject to the provisions of this Paragraph.

9.2 Exclusions:

(a) Emergency. An emergency event which, if not promptly resolved may result in imminent danger to the public health, safety or welfare shall not be subject to dispute resolution.

(b) Complete Discretion. Those matters reserved to the complete discretion of a Party under this Agreement shall not be subject to dispute resolution.

(c) Review under the Judgment Unaffected. The rights and remedies of the Parties to the Judgment to seek review of Watermaster actions shall not be subject to dispute resolution.

9.3 Disputes.

(a) Each Party may submit any Dispute related to or arising under this Agreement to non- binding mediation by delivering a Notice of Dispute to the other Party;

(b) The written Notice of Dispute prepared by the Party shall be delivered to the other Party in accordance with Section 10.13 of the Peace Agreement. The Notice of Dispute shall clearly describe the basis of the dispute and the Paragraphs of the Agreement under which the Dispute arises;

(c) The non-binding mediation shall be conducted by Judicial Arbitration Mediation Services (JAMS) or an equivalent mediation service agreed to by the Parties;

(d) Unless otherwise agreed, a mediator shall be appointed within forty-five (45) days of the date the Notice of Dispute is delivered to hear the dispute and provide a written determination. The mediator shall be chosen jointly by the Parties. If the Parties cannot agree, the Court shall appoint the mediator. Employees or agents of Watermaster or any Party to the Judgment are ineligible to serve as the mediator;

(e) The mediation shall be held within ninety (90) days of the date the Notice of Dispute is delivered;

(f) Any statute of limitations applicable to any claims, rights, causes of action, suits, or liabilities of whatever kind or nature, in law, equity or otherwise, whether known or unknown, shall be tolled during the mediation process. For purposes of this Paragraph, the mediation process shall commence upon the service of a Notice of Dispute to the other Party pursuant to Paragraph 9.3(b) above. For purposes of this Paragraph, the mediation process shall be deemed complete ten (10) days after service of the mediator's written notice of the conclusion of the mediation.

ARTICLE 10
GENERAL PROVISIONS

10.1 Construction of this Agreement. Each Party, with the assistance of competent legal counsel, has participated in the drafting of this Agreement and any ambiguity should not be construed for or against any Party on account of such drafting.

10.2 Awareness of Contents/Legal Effect. The Parties expressly declare and represent that they have read the Agreement and that they have consulted with their respective counsel regarding the meaning of the terms and conditions contained herein. The Parties further expressly declare and represent that they fully understand the content and effect of this Agreement and they approve and accept the terms and conditions contained herein, and that this Agreement is executed freely and voluntarily.

10.3 Amendments and/or Changes to Agreement.

(a) Any amendments and/or changes to this Agreement must be in writing, signed by a duly authorized representative of the Parties hereto, and must expressly state the mutual intent of the Parties to amend this Agreement as set forth herein. The Parties

to this Agreement recognize that the terms and conditions of this Agreement, which are set forth herein in the Paragraphs preceding this Paragraph, have been arrived at through the collective negotiations by the Parties.

(b) The Parties hereby agree that no amendments and/ or changes may be made to this Agreement without the express written approval of each Party to this Agreement, provided that upon request, no such approval shall be unreasonably withheld.

10.4 Counterparts. This Agreement may be executed in counterparts. This Agreement shall become operative as soon as one counterpart hereof has been executed by each Party. The counterparts so executed shall constitute on Agreement notwithstanding that the signatures of all Parties do not appear on the same page.

IN WITNESS WHEREOF, the Parties hereto have set forth their signatures as of the date written below:

DATED:

_____

CITY OF ONTARIO

By_____

DATED:

11-24-15

CITY OF POMONA

By_____

DATED:

10/19/2015

CITY OF UPLAND

By_____

Ray M. Musser, Mayor

DATED:

_____

CITY OF CHINO

By_____

DATED:

10/20/2015

CUCAMONGA VALLEY WATER DISTRICT

By_____

DATED:

11-24-15

MONTE VISTA WATER DISTRICT

By_____

DATED:

12-2-15

FONTANA UNION WATER COMPANY

By_____

DATED:

CITY OF CHINO HILLS

_____

By_____

DATED:

JURUPA COMMUNITY SERVICES DISTRICT

_____

By_____

DATED:

OVERLYING (AGRICULTURAL) POOL

10-8-2015

By Robert Feenstra

DATED:

APPROPRIATIVE POOL

_____

By_____

DATED:

_____

OVERLYING: (NON-AGRICULTURAL) POOL

By_____

DATED:

11/5/15

INLAND EMPIRE UTILITIES AGENCY

By_____

DATED:

10/13/2015

THREE VALLEYS MUNICIPAL WATER DISTRICT

By_____

DATED:

_____

WESTERN MUNICIPAL WATER DISTRICT

By_____

DATED:

SAN ANTONIO WATER COMPANY

_____

By_____

DATED:

CHINO BASIN WATER CONSERVATION DISTRICT

_____

By_____

DATED:

MONTE VISTA IRRIGATION COMPANY

11-10-15

By Sandra Rose

DATED:

FONTANA WATER COMPANY

12.2.15

By Joel Swift

EXHIBITS

A. Reset Technical Memorandum

B. Section 5.1(b)(ii) Accounting Examples

C. Safe Storage Reserve Allocation Illustration

D. Storage Losses Technical Memorandum

E. Safe Storage Withdrawal Technical Memorandum

F. Watermaster Resolution No. 2015-06

APPENDIX N – CHINO BASIN JUDGEMENT

Appendix N

Chino Basin Judgement

Recd 8:50 am Jan 27, 1978 td

DONALD D. STARK
A Professional Corporation
Suite 201 Airport Plaza
2061 Business Center Drive
Irvine, California 92715
Telephone: (714) 752-8971

CLAYSON, ROTHROCK & MANN
601 South Main Street
Corona, California 91720
Telephone: (714) 737-1910

Attorneys for Plaintiff

FILED

'78 JAN 30 AM 11 41

FILED - West District
San Bernardino County Clerk

OCT 26 1989

Carrie Jennings

Lynne Cortese

SUPERIOR COURT OF THE STATE OF CALIFORNIA

FOR THE COUNTY OF SAN BERNARDINO

MICROFILMED

CHINO BASIN MUNICIPAL WATER DISTRICT,

Plaintiff,

v.

CITY OF CHINO, et al.

Defendants.

No. 164327

RCN 51010

JUDGMENT

LAW OFFICES
DONALD D. STARK
A PROFESSIONAL CORPORATION
SUITE 201
2061 BUSINESS CENTER DRIVE
IRVINE, CALIFORNIA 92715
(714) 752-8971

Routing ..... Date ..... Dept. ..... Appeals
Judge ..... Exhibits
Asst. Co. Clerk ..... Supervisor
Index ..... Secretary ..... Other

LAW OFFICES
DONALD D. STARK
A PROFESSIONAL CORPORATION
SUITE 201
2061 BUSINESS CENTER DRIVE
IRVINE, CALIFORNIA 92715
(714) 752-8971

JUDGMENT
TABLE OF CONTENTS

		Page
I.	INTRODUCTION	1
	1. Pleadings, Parties and Jurisdiction	1
	2. Stipulation for Judgment	2
	3. Trial; Findings and Conclusions	2
	4. Definitions	2
	5. Exhibits	5
II.	DECLARATION OF RIGHTS	6
	A. HYDROLOGY	6
	6. Safe Yield	6
	7. Overdraft and Prescriptive Circumstances	6
	B. WATER RIGHTS IN SAFE YIELD	6
	8. Overlying Rights	6
	9. Appropriative Rights	7
	10. Rights of the State of California	8
	C. RIGHTS TO AVAILABLE GROUND WATER STORAGE CAPACITY	8
	11. Available Ground Water Storage Capacity.	8
	12. Utilization of Available Ground Water Capacity	8
III.	INJUNCTION	9
	13. Injunction Against Unauthorized Production of Basin Water	9
	14. Injunction Against Unauthorized Storage or Withdrawal of Stored Water	10
IV.	CONTINUING JURISDICTION	10
	15. Continuing Jurisdiction	10
V.	WATERMASTER	12

LAW OFFICES
DONALD D. STARK
A PROFESSIONAL CORPORATION
SUITE 201
2061 BUSINESS CENTER DRIVE
IRVINE, CALIFORNIA 92715
(714) 752-8971

Page

A. APPOINTMENT 12

16. Watermaster Appointment 12

B. POWERS AND DUTIES 12

17. Powers and Duties 12

18. Rules and Regulations 12

19. Acquisition of Facilities 13

20. Employment of Experts and Agents 13

21. Measuring Devices 13

22. Assessments 14

23. Investment of Funds 14

24. Borrowing 14

25. Contracts 14

26. Cooperation With Other Agencies 14

27. Studies 14

28. Ground Water Storage Agreements 15

29. Accounting for Stored Water 15

30. Annual Administrative Budget. 15

31. Review Procedures 16

C. ADVISORY AND POOL COMMITTEES 17

32. Authorization 17

33. Term and Vacancies 18

34. Voting Power 18

35. Quorum 18

36. Compensation 19

37. Organization 19

38. Powers and Functions 21

VI. PHYSICAL SOLUTION 23

LAW OFFICES
DONALD D. STARK
A PROFESSIONAL CORPORATION
SUITE 201
2061 BUSINESS CENTER DRIVE
IRVINE, CALIFORNIA 92715
(714) 752-8971

Page

A. GENERAL 23

39. Purpose and Objective 23

40. Need for Flexibility 23

41. Watermaster Control 23

42. General Pattern of Operations 24

B. POOLING 24

43. Multiple Pools Established 24

44. Determination and Allocation of Rights to Safe Yield of Chino Basin 25

45. Annual Replenishment 25

46. Initial Pooling PLans 26

C. REPORTS AND ACCOUNTING 26

47. Production Reports 26

48. Watermaster Reports and Accounting 26

D. REPLENISHMENT 27

49. Sources of Supplemental Water 27

50. Methods of Replenishment 28

E. REVENUES 28

51. Production Assessment 28

52. Minimal Producers 28

53. Assessment Proceeds -- Purposes 28

54. Administrative Expenses 29

55. Assessments -- Procedure 29

56. Accumulation of Replenishment Water Assessment Proceeds 30

57. Effective Date 30

VII. MISCELLANEOUS PROVISIONS 31

	Page
58. Designation of Address for Notice and Service	31
59. Service of Documents	31
60. Intervention After Judgment	32
61. Loss of Rights	32
62. Scope of Judgment	32
63. Judgment Binding on Successors	32
64. Costs	33
EXHIBIT "A" -- Location Map of Chino Basin	34
EXHIBIT "B" -- Hydrologic Map of Chino Basin	35
EXHIBIT "C" -- Parties With Overlying Agricultural Rights	36
EXHIBIT "D" -- Parties With Overlying Non-Agricultural Rights	60
EXHIBIT "E" -- Appropriative Rights	61
EXHIBIT "F" -- Overlying Agricultural Pooling Plan . . .	62
EXHIBIT "G" -- Overlying Non-Agricultural Pooling Plan .	65
EXHIBIT "H" -- Appropriative Pooling Plan	68
EXHIBIT "I" -- Engineering Appendix	79
EXHIBIT "J" -- Map of In Lieu Area No. 1	82
EXHIBIT "K" -- Legal Description of Chino Basin	83

LAW OFFICES
DONALD D. STARK
A PROFESSIONAL CORPORATION
SUITE 201
2061 BUSINESS CENTER DRIVE
IRVINE, CALIFORNIA 92715
(714) 752-8871

DONALD D. STARK
A Professional Corporation
Suite 201 Airport Plaza
2061 Business Center Drive
Irvine, California 92715
Telephone: (714) 752-8971

CLAYSON, ROTHROCK & MANN
601 South Main Street
Corona, California 91720
Telephone: (714) 737-1910

Attorneys for Plaintiff

SUPERIOR COURT OF THE STATE OF CALIFORNIA

FOR THE COUNTY OF SAN BERNARDINO

CHINO BASIN MUNICIPAL WATER DISTRICT, Plaintiff, v. CITY OF CHINO, et al. Defendants.	No. 164327 JUDGMENT

LAW OFFICES
DONALD D. STARK
A PROFESSIONAL CORPORATION
SUITE 201
2061 BUSINESS CENTER DRIVE
IRVINE, CALIFORNIA 92715
(714) 752-8971

I. INTRODUCTION

1. Pleadings, Parties and Jurisdiction. The complaint herein was filed on January 2, 1975, seeking an adjudication of water rights, injunctive relief and the imposition of a physical solution. A first amended complaint was filed on July 16, 1976. The defaults of certain defendants have been entered, and certain other defendants dismissed. Other than defendants who have been dismissed or whose defaults have been entered, all defendants have appeared herein. By answers and order of this Court, the issues have been made those of a full inter se adjudication between the

parties. This Court has jurisdiction of the subject matter of this action and of the parties herein.

2. Stipulation For Judgment. Stipulation for entry of judgment has been filed by and on behalf of a majority of the parties, representing a majority of the quantitative rights herein adjudicated.

3. Trial; Findings and Conclusions. Trial was commenced on December 16, 1977, as to the non-stipulating parties, and findings of fact and conclusions of law have been entered disposing of the issues in the case.

4. Definitions. As used in this Judgment, the following terms shall have the meanings herein set forth:

(a) Active Parties. All parties other than those who have filed with Watermaster a written waiver of service of notices, pursuant to Paragraph 58.

(b) Annual or Year -- A fiscal year, July 1 through June 30, following, unless the context shall clearly indicate a contrary meaning.

(c) Appropriative Right -- The annual production right of a producer from the Chino Basin other than pursuant to an overlying right.

(d) Basin Water -- Ground water within Chino Basin which is part of the Safe Yield, Operating Safe Yield, or replenishment water in the Basin as a result of operations under the Physical Solution decreed herein. Said term does not include Stored Water.

(e) CBMWD -- Plaintiff Chino Basin Municipal Water District.

LAW OFFICES
DONALD D. STARK
A PROFESSIONAL CORPORATION
SUITE 201
2061 BUSINESS CENTER DRIVE
IRVINE, CALIFORNIA 92715
(714) 752-8971

(f) Chino Basin or Basin -- The ground water basin underlying the area shown as such on Exhibit "B" and within the boundaries described in Exhibit "K".

(g) Chino Basin Watershed -- The surface drainage area tributary to and overlying Chino Basin.

(h) Ground Water -- Water beneath the surface of the ground and within the zone of saturation, i.e., below the existing water table.

(i) Ground Water Basin -- An area underlain by one or more permeable formations capable of furnishing substantial water storage.

(j) Minimal Producer -- Any producer whose production does not exceed five acre-feet per year.

(k) MWD -- The Metropolitan Water District of Southern California.

(l) Operating Safe Yield -- The annual amount of ground water which Watermaster shall determine, pursuant to criteria specified in Exhibit "I", can be produced from Chino Basin by the Appropriative Pool parties free of replenishment obligation under the Physical Solution herein.

(m) Overdraft -- A condition wherein the total annual production from the Basin exceeds the Safe Yield thereof.

(n) Overlying Right -- The appurtenant right of an owner of lands overlying Chino Basin to produce water from the Basin for overlying beneficial use on such lands.

(o) Person. Any individual, partnership, association, corporation, governmental entity or agency, or other organization.

LAW OFFICES
DONALD D. STARK
A PROFESSIONAL CORPORATION
SUITE 201
2061 BUSINESS CENTER DRIVE
IRVINE, CALIFORNIA 92715
(714) 752-8971

(p) PVMWD -- Defendant Pomona Valley Municipal Water District.

(q) Produce or Produced -- To pump or extract ground water from Chino Basin.

(r) Producer -- Any person who produces water from Chino Basin.

(s) Production -- Annual quantity, stated in acre feet, of water produced.

(t) Public Hearing -- A hearing after notice to all parties and to any other person legally entitled to notice.

(u) Reclaimed Water -- Water which, as a result of processing of waste water, is suitable for a controlled use.

(v) Replenishment Water -- Supplemental water used to recharge the Basin pursuant to the Physical Solution, either directly by percolating the water into the Basin or indirectly by delivering the water for use in lieu of production and use of safe yield or Operating Safe Yield.

(w) Responsible Party -- The owner, co-owner, lessee or other person designated by multiple parties interested in a well as the person responsible for purposes of filing reports hereunder.

(x) Safe Yield -- The long-term average annual quantity of ground water (excluding replenishment or stored water but including return flow to the Basin from use of replenishment or stored water) which can be produced from the Basin under cultural conditions of a particular year without causing an undesirable result.

(y) SBVMWD -- San Bernardino Valley Municipal Water

LAW OFFICES
DONALD D. STARK
A PROFESSIONAL CORPORATION
SUITE 201
2061 BUSINESS CENTER DRIVE
IRVINE, CALIFORNIA 92715
(714) 752-8971

District.

(z) State Water -- Supplemental Water imported through the State Water Resources Development System, pursuant to Chapter 8, Division 6, Part 6 of the Water Code.

(aa) Stored Water -- Supplemental water held in storage, as a result of direct spreading, in lieu delivery, or otherwise, for subsequent withdrawal and use pursuant to agreement with Watermaster.

(bb) Supplemental Water -- Includes both water imported to Chino Basin from outside Chino Basin Watershed, and reclaimed water.

(cc) WMWD -- Defendant Western Municipal Water District of Riverside County.

5. List of Exhibits. The following exhibits are attached to this Judgment and made a part hereof:

"A" -- "Location Map of Chino Basin" showing boundaries of Chino Basin Municipal Water District, and other geographic and political features.

"B" -- "Hydrologic Map of Chino Basin" showing hydrologic features of Chino Basin.

"C" -- Table Showing Parties in Overlying (Agricultural) Pool.

"D" -- Table Showing Parties in Overlying (Non-agricultural Pool and Their Rights.

"E" -- Table Showing Appropriators and Their Rights.

"F" -- Overlying (Agricultural) Pool Pooling Plan.

"G" -- Overlying (Non-agricultural) Pool Pooling Plan.

"H" -- Appropriative Pool Pooling Plan.

LAW OFFICES
DONALD D. STARK
A PROFESSIONAL CORPORATION
SUITE 201
2061 BUSINESS CENTER DRIVE
IRVINE, CALIFORNIA 92715
(714) 752-8971

"I" -- Engineering Appendix.

"J" -- Map of In Lieu Area No. 1.

"K" -- Legal Description of Chino Basin.

II. DECLARATION OF RIGHTS

A. HYDROLOGY

6. Safe Yield. The Safe Yield of Chino Basin is 140,000 acre feet per year.

7. Overdraft and Prescriptive Circumstances. In each year for a period in excess of five years prior to filing of the First Amended Complaint herein, the Safe Yield of the Basin has been exceeded by the annual production therefrom, and Chino Basin is and has been for more than five years in a continuous state of overdraft. The production constituting said overdraft has been open, notorious, continuous, adverse, hostile and under claim of right. The circumstances of said overdraft have given notice to all parties of the adverse nature of such aggregate over-production.

B. WATER RIGHTS IN SAFE YIELD

8. Overlying Rights. The parties listed in Exhibits "C" and "D" are the owners or in possession of lands which overlie Chino Basin. As such, said parties have exercised overlying water rights in Chino Basin. All overlying rights owned or exercised by parties listed in Exhibits "C" and "D" have, in the aggregate, been limited by prescription except to the extent such rights have been preserved by self-help by said parties. Aggregate preserved overlying rights in the Safe Yield for agricultural pool use, including the rights of the State of California, total 82,800 acre feet per year. Overlying rights for non-agricultural pool use

LAW OFFICES
DONALD D. STARK
A PROFESSIONAL CORPORATION
SUITE 201
2061 BUSINESS CENTER DRIVE
IRVINE, CALIFORNIA 92715
(714) 752-8971

total 7,366 acre feet per year and are individually decreed for each affected party in Exhibit "D". No portion of the Safe Yield of Chino Basin exists to satisfy unexercised overlying rights, and such rights have all been lost by prescription. However, uses may be made of Basin Water on overlying lands which have no preserved overlying rights pursuant to the Physical Solution herein. All overlying rights are appurtenant to the land and cannot be assigned or conveyed separate or apart therefrom.

9. Appropriative Rights. The parties listed in Exhibit "E" are the owners of appropriative rights, including rights by prescription, in the unadjusted amounts therein set forth, and by reason thereof are entitled under the Physical Solution to share in the remaining Safe Yield, after satisfaction of overlying rights and rights of the State of California, and in the Operating Safe Yield in Chino Basin, in the annual shares set forth in Exhibit "E".

(a) Loss of Priorities. By reason of the long continued overdraft in Chino Basin, and in light of the complexity of determining appropriative priorities and the need for conserving and making maximum beneficial use of the water resources of the State, each and all of the parties listed in Exhibit "E" are estopped and barred from asserting special priorities or preferences, inter se. All of said appropriative rights are accordingly deemed and considered of equal priority.

(b) Nature and Quantity. All rights listed in Exhibit "E" are appropriative and prescriptive in nature. By reason of the status of the parties, and the provisions of Section

LAW OFFICES
DONALD D. STARK
A PROFESSIONAL CORPORATION
SUITE 201
2061 BUSINESS CENTER DRIVE
IRVINE, CALIFORNIA 92715
(714) 752-8971

1007 of the Civil Code, said rights are immune from reduction or limitation by prescription.

10. Rights of the State of California. The State of California, by and through its Department of Corrections, Youth Authority and Department of Fish and Game, is a significant producer of ground water from and the State is the largest owner of land overlying Chino Basin. The precise nature and scope of the claims and rights of the State need not be, and are not, defined herein. The State, through said departments, has accepted the Physical Solution herein decreed, in the interests of implementing the mandate of Section 2 of Article X of the California Constitution. For all purposes of this Judgment, all future production by the State or its departments or agencies for overlying use on State-owned lands shall be considered as agricultural pool use.

C. RIGHTS TO AVAILABLE GROUND WATER STORAGE CAPACITY

11. Available Ground Water Storage Capacity. There exists in Chino Basin a substantial amount of available ground water storage capacity which is not utilized for storage or regulation of Basin Waters. Said reservoir capacity can appropriately be utilized for storage and conjunctive use of supplemental water with Basin Waters. It is essential that said reservoir capacity utilization for storage and conjunctive use of supplemental water be undertaken only under Watermaster control and regulation, in order to protect the integrity of both such Stored Water and Basin Water in storage and the Safe Yield of Chino Basin.

12. Utilization of Available Ground Water Capacity. Any person or public entity, whether a party to this action or not, may make reasonable beneficial use of the available ground water

LAW OFFICES
DONALD D. STARK
A PROFESSIONAL CORPORATION
SUITE 201
2061 BUSINESS CENTER DRIVE
IRVINE, CALIFORNIA 92715
(714) 752-8971

storage capacity of Chino Basin for storage of supplemental water; provided that no such use shall be made except pursuant to written agreement with Watermaster, as authorized by Paragraph 28. In the allocation of such storage capacity, the needs and requirements of lands overlying Chino Basin and the owners of rights in the Safe Yield or Operating Safe Yield of the Basin shall have priority and preference over storage for export.

III. INJUNCTION

13. Injunction Against Unauthorized Production of Basin Water. Each party in each of the respective pools is enjoined, as follows:

(a) Overlying (Agricultural) Pool. Each party in the Overlying (Agricultural) Pool, its officers, agents, employees, successors and assigns, is and they each are ENJOINED AND RESTRAINED from producing ground water from Chino Basin in any year hereafter in excess of such party's correlative share of the aggregate of 82,800 acre feet allocated to said Pool, except pursuant to the Physical Solution or a storage water agreement.

(b) Overlying (Non-Agricultural) Pool. Each party in the Overlying (Non-agricultural) Pool, its officers, agents, employees, successors and assigns, is and they each are ENJOINED AND RESTRAINED from producing ground water of Chino Basin in any year hereafter in excess of such party's decreed rights in the Safe Yield, except pursuant to the provisions of the Physical Solution or a storage water agreement.

(c) Appropriative Pool. Each party in the

LAW OFFICES
DONALD D. STARK
A PROFESSIONAL CORPORATION
SUITE 201
2061 BUSINESS CENTER DRIVE
IRVINE, CALIFORNIA 92715
(714) 752-8971

Appropriative Pool, its officers, agents, employees, successors and assigns, is and they are each ENJOINED AND RESTRAINED from producing ground water of Chino Basin in any year hereafter in excess of such party's decreed share of Operating Safe Yield, except pursuant to the provisions of the Physical Solution or a storage water agreement.

14. Injunction Against Unauthorized Storage or Withdrawal of Stored Water. Each party, its officers, agents, employees, successors and assigns is and they each are ENJOINED AND RESTRAINED from storing supplemental water in Chino Basin for withdrawal, or causing withdrawal of, water stored by that party, except pursuant to the terms of a written agreement with Watermaster and in accordance with Watermaster regulations. Any supplemental water stored or recharged in the Basin, except pursuant to such a Watermaster agreement, shall be deemed abandoned and not classified as Stored Water. This paragraph has no application, as such, to supplemental water spread or provided in lieu by Watermaster pursuant to the Physical Solution.

LAW OFFICES
DONALD D. STARK
A PROFESSIONAL CORPORATION
SUITE 201
2061 BUSINESS CENTER DRIVE
IRVINE, CALIFORNIA 92715
(714) 752-8971

IV. CONTINUING JURISDICTION

15. Continuing Jurisdiction. Full jurisdiction, power and authority are retained and reserved to the Court as to all matters contained in this judgment, except:

(a) The redetermination of Safe Yield, as set forth in Paragraph 6, during the first ten (10) years of operation of the Physical Solution;

(b) The allocation of Safe Yield as between the several pools as set forth in Paragraph 44 of the Physical Solution;

(c) The determination of specific quantitative rights and shares in the declared Safe Yield or Operating Safe Yield herein declared in Exhibits "D" and "E"; and

(d) The amendment or modification of Paragraphs 7(a) and (b) of Exhibit "H", during the first ten (10) years of operation of the Physical Solution, and thereafter only upon affirmative recommendation of at least 67% of the voting power (determined pursuant to the formula described in Paragraph 3 of Exhibit "H"), but not less than one-third of the members of the Appropriative Pool Committee representatives of parties who produce water within CBMWD or WMWD; after said tenth year the formula set forth in said Paragraph 7(a) and 7(b) of Exhibit "H" for payment of the costs of replenishment water may be changed to 100% gross or net, or any percentage split thereof, but only in response to recommendation to the Court by affirmative vote of at least 67% of said voting power of the Appropriative Pool representatives of parties who produce ground water within CBMWD or WMWD, but not less than one-third of their number. In such event, the Court shall act in conformance with such recommendation unless there are compelling reasons to the contrary; and provided, further, that the fact that the allocation of Safe Yield or Operating Safe Yield shares may be rendered moot by a recommended change in the formula for replenishment assessments shall not be deemed to be such a "compelling reason."

Said continuing jurisdiction is provided for the purpose of enabling the Court, upon application of any party, the Watermaster, the Advisory Committee or any Pool Committee, by motion and, upon

LAW OFFICES
DONALD D. STARK
A PROFESSIONAL CORPORATION
SUITE 201
2061 BUSINESS CENTER DRIVE
IRVINE, CALIFORNIA 92715
(714) 752-8971

at least 30 days' notice thereof, and after hearing thereon, to make such further or supplemental orders or directions as may be necessary or appropriate for interpretation, enforcement or carrying out of this Judgment, and to modify, amend or amplify any of the provisions of this Judgment.

V. WATERMASTER

A. APPOINTMENT

16. Watermaster Appointment. CBMWD, acting by and through a majority of its board of directors, is hereby appointed Watermaster, to administer and enforce the provisions of this Judgment and any subsequent instructions or orders of the Court hereunder. The term of appointment of Watermaster shall be for five (5) years. The Court will by subsequent orders provide for successive terms or for a successor Watermaster. Watermaster may be changed at any time by subsequent order of the Court, on its own motion, or on the motion of any party after notice and hearing. Unless there are compelling reasons to the contrary, the Court shall act in conformance with a motion requesting the Watermaster be changed if such motion is supported by a majority of the voting power of the Advisory Committee.

B. POWERS AND DUTIES

17. Powers and Duties. Subject to the continuing supervision and control of the Court, Watermaster shall have and may exercise the express powers, and shall perform the duties, as provided in this Judgment or hereafter ordered or authorized by the Court in the exercise of the Court's continuing jurisdiction.

18. Rules and Regulations. Upon recommendation by the

LAW OFFICES
DONALD D. STARK
A PROFESSIONAL CORPORATION
SUITE 201
2061 BUSINESS CENTER DRIVE
IRVINE, CALIFORNIA 92715
(714) 752-8971

Advisory Committee, Watermaster shall make and adopt, after public hearing, appropriate rules and regulations for conduct of Watermaster affairs, including meeting schedules and procedures, and compensation of members of Watermaster at not to exceed $25 per member per meeting, or $300 per member per year, whichever is less, plus reasonable expenses related to activities within the Basin. Thereafter, Watermaster may amend said rules from time to time upon recommendation, or with approval of the Advisory Committee after hearing noticed to all active parties. A copy of said rules and regulations, and of any amendments thereof, shall be mailed to each active party.

19. Acquisition of Facilities. Watermaster may purchase, lease, acquire and hold all necessary facilities and equipment; provided, that it is not the intent of the Court that Watermaster acquire any interest in real property or substantial capital assets.

20. Employment of Experts and Agents. Watermaster may employ or retain such administrative, engineering, geologic, accounting, legal or other specialized personnel and consultants as may be deemed appropriate in the carrying out of its powers and shall require appropriate bonds from all officers and employees handling Watermaster funds. Watermaster shall maintain records for purposes of allocation of costs of such services as well as of all other expenses of Watermaster administration as between the several pools established by the Physical Solution.

21. Measuring Devices. Watermaster shall cause parties, pursuant to uniform rules, to install and maintain in good operating condition, at the cost of each party, such necessary measuring

LAW OFFICES
DONALD D. STARK
A PROFESSIONAL CORPORATION
SUITE 201
2061 BUSINESS CENTER DRIVE
IRVINE, CALIFORNIA 92715
(714) 752-8971

devices or meters as Watermaster may deem appropriate. Such measuring devices shall be inspected and tested as deemed necessary by Watermaster, and the cost thereof shall constitute an expense of Watermaster.

22. Assessments. Watermaster is empowered to levy and collect all assessments provided for in the pooling plans and Physical Solution.

23. Investment of Funds. Watermaster may hold and invest any and all Watermaster funds in investments authorized from time to time for public agencies of the State of California.

24. Borrowing. Watermaster may borrow from time to time amounts not exceeding the annual anticipated receipts of Watermaster during such year.

25. Contracts. Watermaster may enter into contracts for the performance of any powers herein granted; provided, however, that Watermaster may not contract with or purchase materials, supplies or services from CBMWD, except upon the prior recommendation and approval of the Advisory Committee and pursuant to written order of the Court.

26. Cooperation With Other Agencies. Subject to prior recommendation or approval of the Advisory Committee, Watermaster may act jointly or cooperate with agencies of the United States and the State of California or any political subdivisions, municipalities or districts or any person to the end that the purpose of the Physical Solution may be fully and economically carried out.

27. Studies. Watermaster may, with concurrence of the Advisory Committee or affected Pool Committee and in accordance with Paragraph 54(b), undertake relevant studies of hydrologic

LAW OFFICES
DONALD D. STARK
A PROFESSIONAL CORPORATION
SUITE 201
2061 BUSINESS CENTER DRIVE
IRVINE, CALIFORNIA 92715
(714) 752-8971

conditions, both quantitative and qualitative, and operating aspects of implementation of the management program for Chino Basin.

28. Ground Water Storage Agreements. Watermaster shall adopt, with the approval of the Advisory Committee, uniformly applicable rules and a standard form of agreement for storage of supplemental water, pursuant to criteria therefor set forth in Exhibit "I". Upon appropriate application by any person, Watermaster shall enter into such a storage agreement; provided that all such storage agreements shall first be approved by written order of the Court, and shall by their terms preclude operations which will have a substantial adverse impact on other producers.

29. Accounting for Stored Water. Watermaster shall calculate additions, extractions and losses and maintain an annual account of all Stored Water in Chino Basin, and any losses of water supplies or Safe Yield of Chino Basin resulting from such Stored Water.

30. Annual Administrative Budget. Watermaster shall submit to Advisory Committee an administrative budget and recommendation for each fiscal year on or before March 1. The Advisory Committee shall review and submit said budget and their recommendations to Watermaster on or before April 1, following. Watermaster shall hold a public hearing on said budget at its April quarterly meeting and adopt the annual administrative budget which shall include the administrative items for each pool committee. The administrative budget shall set forth budgeted items in sufficient detail as necessary to make a proper allocation of the expense among the several pools, together with Watermaster's proposed allocation. The budget shall contain such additional comparative information

LAW OFFICES
DONALD D. STARK
A PROFESSIONAL CORPORATION
SUITE 201
2061 BUSINESS CENTER DRIVE
IRVINE, CALIFORNIA 92715
(714) 752-8971

or explanation as the Advisory Committee may recommend from time to time. Expenditures within budgeted items may thereafter be made by Watermaster in the exercise of powers herein granted, as a matter of course. Any budget transfer in excess of 20% of a budget category during any budget year or modification of such administrative budget during any year shall be first submitted to the Advisory Committee for review and recommendation.

31. Review Procedures. All actions, decisions or rules of Watermaster shall be subject to review by the Court on its own motion or on timely motion by any party, the Watermaster (in the case of a mandated action), the Advisory Committee, or any Pool Committee, as follows:

(a) Effective Date of Watermaster Action. Any action, decision or rule of Watermaster shall be deemed to have occurred or been enacted on the date on which written notice thereof is mailed. Mailing of copies of approved Watermaster minutes to the active parties shall constitute such notice to all parties.

(b) Noticed Motion. Any party, the Watermaster (as to any mandated action), the Advisory Committee, or any Pool Committee may, by a regularly noticed motion, apply to the Court for review of any Watermaster's action, decision or rule. Notice of such motion shall be served personally or mailed to Watermaster and to all active parties. Unless otherwise ordered by the Court, such motion shall not operate to stay the effect of such Watermaster action, decision or rule.

- - - - - - - - - - - - - - -

LAW OFFICES
DONALD D. STARK
A PROFESSIONAL CORPORATION
SUITE 201
2061 BUSINESS CENTER DRIVE
IRVINE, CALIFORNIA 92715
(714) 752-8971

(c) Time for Motion. Notice of motion to review any Watermaster action, decision or rule shall be served and filed within ninety (90) days after such Watermaster action, decision or rule, except for budget actions, in which event said notice period shall be sixty (60) days.

(d) De Novo Nature of Proceedings. Upon the filing of any such motion, the Court shall require the moving party to notify the active parties, the Watermaster, the Advisory Committee and each Pool Committee, of a date for taking evidence and argument, and on the date so designated shall review de novo the question at issue. Watermaster's findings or decision, if any, may be received in evidence at said hearing, but shall not constitute presumptive or prima facie proof of any fact in issue.

(e) Decision. The decision of the Court in such proceeding shall be an appealable supplemental order in this case. When the same is final, it shall be binding upon the Watermaster and all parties.

C. ADVISORY AND POOL COMMITTEES

32. Authorization. Watermaster is authorized and directed to cause committees of producer representatives to be organized to act as Pool Committees for each of the several pools created under the Physical Solution. Said Pool Committees shall, in turn, jointly form an Advisory Committee to assist Watermaster in performance of its functions under this judgment. Pool Committees shall be composed as specified in the respective pooling plans, and the Advisory Committee shall be composed of not to exceed ten (10) voting representatives from each pool, as designated by the

LAW OFFICES
DONALD D. STARK
A PROFESSIONAL CORPORATION
SUITE 201
2061 BUSINESS CENTER DRIVE
IRVINE, CALIFORNIA 92715
(714) 752-8971

LAW OFFICES
DONALD D. STARK
A PROFESSIONAL CORPORATION
SUITE 201
2061 BUSINESS CENTER DRIVE
IRVINE, CALIFORNIA 92715
(714) 752-8971

respective Pool Committee. WMWD, PVMWD and SBVMWD shall each be entitled to one non-voting representative on said Advisory Committee.

33. Term and Vacancies. Members of any Pool Committee, shall serve for the term, and vacancies shall be filled, as specified in the respective pooling plan. Members of the Advisory Committee shall serve at the will of their respective Pool Committee.

34. Voting Power. The voting power on each Pool Committee shall be allocated as provided in the respective pooling plan. The voting power on the Advisory Committee shall be one hundred (100) votes allocated among the three pools in proportion to the total assessments paid to Watermaster during the preceding year; provided, that the minimum voting power of each pool shall be

(a) Overlying (Agricultural) Pool 20,

(b) Overlying (Non-agricultural) Pool 5, and

(c) Appropriative Pool 20.

In the event any pool is reduced to its said minimum vote, the remaining votes shall be allocated between the remaining pools on said basis of assessments paid to Watermaster by each such remaining pool during the preceding year. The method of exercise of each pool's voting power on the Advisory Committee shall be as determined by the respective pool committees.

35. Quorum. A majority of the voting power of the Advisory Committee or any Pool Committee shall constitute a quorum for the transaction of affairs of such Advisory or Pool Committee; provided, that at least one representative of each Pool Committee shall be required to constitute a quorum of the Advisory Committee. No Pool Committee representative may purposely absent himself or

herself, without good cause, from an Advisory Committee meeting to deprive it of a quorum. Action by affirmative vote of a majority of the entire voting power of any Pool Committee or the Advisory Committee shall constitute action by such committee. Any action or recommendation of a Pool Committee or the Advisory Committee shall be transmitted to Watermaster in writing, together with a report of any dissenting vote or opinion.

36. Compensation. Pool or Advisory Committee members may receive compensation, to be established by the respective pooling plan, but not to exceed twenty-five dollars ($25.00) for each meeting of such Pool or Advisory Committee attended, and provided that no member of a Pool or Advisory Committee shall receive compensation of more than three hundred ($300.00) dollars for service on any such committee during any one year. All such compensation shall be a part of Watermaster administrative expense. No member of any Pool or Advisory Committee shall be employed by Watermaster or compensated by Watermaster for professional or other services rendered to such Pool or Advisory Committee or to Watermaster, other than the fee for attendance at meetings herein provided, plus reimbursement of reasonable expenses related to activities within the Basin.

37. Organization.

(a) Organizational Meeting. At its first meeting in each year, each Pool Committee and the Advisory Committee shall elect a chairperson and a vice chairperson from its membership. It shall also select a secretary, a treasurer and such assistant secretaries and treasurers as may be appropriate, any of whom may, but need not, be members of

LAW OFFICES
DONALD D. STARK
A PROFESSIONAL CORPORATION
SUITE 201
2061 BUSINESS CENTER DRIVE
IRVINE, CALIFORNIA 92715
(714) 752-8971

such Pool or Advisory Committee.

(b) Regular Meetings. All Pool Committees and the Advisory Committee shall hold regular meetings at a place and time to be specified in the rules to be adopted by each Pool and Advisory Committee. Notice of regular meetings of any Pool or Advisory Committee, and of any change in time or place thereof, shall be mailed to all active parties in said pool or pools.

(c) Special Meetings. Special meetings of any Pool or Advisory Committee may be called at any time by the Chairperson or by any three (3) members of such Pool or Advisory Committee by delivering notice personally or by mail to each member of such Pool or Advisory Committee and to each active party at least 24 hours before the time of each such meeting in the case of personal delivery, and 96 hours in the case of mail. The calling notice shall specify the time and place of the special meeting and the business to be transacted. No other business shall be considered at such meeting.

(d) Minutes. Minutes of all Pool Committee, Advisory Committee and Watermaster meetings shall be kept at Watermaster's offices. Copies thereof shall be mailed or otherwise furnished to all active parties in the pool or pools concerned. Said copies of minutes shall constitute notice of any Pool or Advisory Committee action therein reported, and shall be available for inspection by any party.

(e) Adjournments. Any meeting of any Pool or Advisory Committee may be adjourned to a time and place specified in the order of adjournment. Less than a quorum may so adjourn

LAW OFFICES
DONALD D. STARK
A PROFESSIONAL CORPORATION
SUITE 201
2061 BUSINESS CENTER DRIVE
IRVINE, CALIFORNIA 92715
(714) 752-8971

from time to time. A copy of the order or notice of adjournment shall be conspicuously posted forthwith on or near the door of the place where the meeting was held.

38. Powers and Functions. The powers and functions of the respective Pool Committees and the Advisory Committee shall be as follows:

(a) Pool Committees. Each Pool Committee shall have the power and responsibility for developing policy recommendations for administration of its particular pool, as created under the Physical Solution. All actions and recommendations of any Pool Committee which require Watermaster implementation shall first be noticed to the other two pools. If no objection is received in writing within thirty (30) days, such action or recommendation shall be transmitted directly to Watermaster for action. If any such objection is received, such action or recommendation shall be reported to the Advisory Committee before being transmitted to Watermaster.

(b) Advisory Committee. The Advisory Committee shall have the duty to study, and the power to recommend, review and act upon all discretionary determinations made or to be made hereunder by Watermaster.

[1] Committee Initiative. When any recommendation or advice of the Advisory Committee is received by Watermaster, action consistent therewith may be taken by Watermaster; provided, that any recommendation approved by 80 votes or more in the Advisory Committee shall constitute a mandate for action by Watermaster consistent therewith. If Watermaster is unwilling or unable to act

LAW OFFICES
DONALD D. STARK
A PROFESSIONAL CORPORATION
SUITE 201
2061 BUSINESS CENTER DRIVE
IRVINE, CALIFORNIA 92715
(714) 752-8971

pursuant to recommendation or advice from the Advisory Committee (other than such mandatory recommendations), Watermaster shall hold a public hearing, which shall be followed by written findings and decision. Thereafter, Watermaster may act in accordance with said decision, whether consistent with or contrary to said Advisory Committee recommendation. Such action shall be subject to review by the Court, as in the case of all other Watermaster determinations.

[2] Committee Review. In the event Watermaster proposes to take any discretionary action, other than approval or disapproval of a Pool Committee action or recommendation properly transmitted, or execute any agreement not theretofore within the scope of an Advisory Committee recommendation, notice of such intended action shall be served on the Advisory Committee and its members at least thirty (30) days before the Watermaster meeting at which such action is finally authorized.

(c) Review of Watermaster Actions. Watermaster (as to mandated action), the Advisory Committee or any Pool Committee shall be entitled to employ counsel and expert assistance in the event Watermaster or such Pool or Advisory Committee seeks Court review of any Watermaster action or failure to act. The cost of such counsel and expert assistance shall be Watermaster expense to be allocated to the affected pool or pools.

- - - - - - - - - - - - -

- - - - - - - - - - - - -

- - - - - - - - - - - - -

LAW OFFICES
DONALD D. STARK
A PROFESSIONAL CORPORATION
SUITE 201
2061 BUSINESS CENTER DRIVE
IRVINE, CALIFORNIA 92715
(714) 752-8971

LAW OFFICES
DONALD D. STARK
A PROFESSIONAL CORPORATION
SUITE 201
2061 BUSINESS CENTER DRIVE
IRVINE, CALIFORNIA 92715
(714) 752-8971

VI. PHYSICAL SOLUTION

A. GENERAL

39. Purpose and Objective. Pursuant to the mandate of Section 2 of Article X of the California Constitution, the Court hereby adopts and orders the parties to comply with a Physical Solution. The purpose of these provisions is to establish a legal and practical means for making the maximum reasonable beneficial use of the waters of Chino Basin by providing the optimum economic, long-term, conjunctive utilization of surface waters, ground waters and supplemental water, to meet the requirements of water users having rights in or dependent upon Chino Basin.

40. Need for Flexibility. It is essential that this Physical Solution provide maximum flexibility and adaptability in order that Watermaster and the Court may be free to use existing and future technological, social, institutional and economic options, in order to maximize beneficial use of the waters of Chino Basin. To that end, the Court's retained jurisdiction will be utilized, where appropriate, to supplement the discretion herein granted to the Wastermaster.

41. Watermaster Control. Watermaster, with the advice of the Advisory and Pool Committees, is granted discretionary powers in order to develop an optimum basin management program for Chino Basin, including both water quantity and quality considerations. Withdrawals and supplemental water replenishment of Basin Water, and the full utilization of the water resources of Chino Basin, must be subject to procedures established by and administered through Watermaster with the advice and assistance of the Advisory and Pool Committees composed of the affected producers. Both the

quantity and quality of said water resources may thereby be preserved and the beneficial utilization of the Basin maximized.

42. General Pattern of Operations. It is contemplated that the rights herein decreed will be divided into three (3) operating pools for purposes of Watermaster administration. A fundamental premise of the Physical Solution is that all water users dependent upon Chino Basin will be allowed to pump sufficient waters from the Basin to meet their requirements. To the extent that pumping exceeds the share of the Safe Yield assigned to the Overlying Pools, or the Operating Safe Yield in the case of the Appropriative Pool, each pool will provide funds to enable Watermaster to replace such overproduction. The method of assessment in each pool shall be as set forth in the applicable pooling plan.

B. POOLING

43. Multiple Pools Established. There are hereby established three (3) pools for Watermaster administration of, and for the allocation of responsibility for, and payment of, costs of replenishment water and other aspects of this Physical Solution.

(a) Overlying (Agricultural) Pool. The first pool shall consist of the State of California and all overlying producers who produce water for other than industrial or commercial purposes. The initial members of the pool are listed in Exhibit "C".

(b) Overlying (Non-agricultural) Pool. The second pool shall consist of overlying producers who produce water for industrial or commercial purposes. The initial members of this pool are listed in Exhibit "D".

(c) Appropriative Pool. A third and separate pool shall

LAW OFFICES
DONALD D. STARK
A PROFESSIONAL CORPORATION
SUITE 201
2061 BUSINESS CENTER DRIVE
IRVINE, CALIFORNIA 92715
(714) 752-8971

consist of owners of appropriative rights. The initial members of the pool are listed in Exhibit "E".

Any party who changes the character of his use may, by subsequent order of the Court, be reassigned to the proper pool; but the allocation of Safe Yield under Paragraph 44 hereof shall not be changed. Any non-party producer or any person who may hereafter commence production of water from Chino Basin, and who may become a party to this physical solution by intervention, shall be assigned to the proper pool by the order of the Court authorizing such intervention.

44. Determination and Allocation of Rights to Safe Yield of Chino Basin. The declared Safe Yield of Chino Basin is hereby allocated as follows:

Pool	Allocation
Overlying (Agricultural) Pool	414,000 acre feet in any five (5) consecutive years.
Overlying (Non-agricultural) Pool.	7,366 acre feet per year.
Appropriative Pool	49,834 acre feet per year.

The foregoing acre foot allocations to the overlying pools are fixed. Any subsequent change in the Safe Yield shall be debited or credited to the Appropriative Pool. Basin Water available to the Appropriative Pool without replenishment obligation may vary from year to year as the Operating Safe Yield is determined by Watermaster pursuant to the criteria set forth in Exhibit "I".

45. Annual Replenishment. Watermaster shall levy and collect assessments in each year, pursuant to the respective pooling plans, in amounts sufficient to purchase replenishment water to replace production by any pool during the preceding year which exceeds that

LAW OFFICES
DONALD D. STARK
A PROFESSIONAL CORPORATION
SUITE 201
2061 BUSINESS CENTER DRIVE
IRVINE, CALIFORNIA 92715
(714) 752-8971

pool's allocated share of Safe Yield in the case of the overlying pools, or Operating Safe Yield in the case of the Appropriative Pool. It is anticipated that supplemental water for replenishment of Chino Basin may be available at different rates to the various pools to meet their replenishment obligations. If such is the case, each pool will be assessed only that amount necessary for the cost of replenishment water to that pool, at the rate available to the pool, to meet its replenishment obligation.

46. Initial Pooling Plans. The initial pooling plans, which are hereby adopted, are set forth in Exhibits "F", "G" and "H", respectively. Unless and until modified by amendment of the judgment pursuant to the Court's continuing jurisdiction, each such plan shall control operation of the subject pool.

C. REPORTS AND ACCOUNTING

47. Production Reports. Each party or responsible party shall file periodically with Watermaster, pursuant to Watermaster rules, a report on a form to be prescribed by Watermaster showing the total production of such party during the preceding reportage period, and such additional information as Watermaster may require, including any information specified by the affected Pool Committee.

48. Watermaster Reports and Accounting. Watermaster's annual report, which shall be filed on or before November 15 of each year and shall apply to the preceding year's operation, shall contain details as to operation of each of the pools and a certified audit of all assessments and expenditures pursuant to this Physical Solution and a review of Watermaster activities.

- - - - - - - - - - - -

LAW OFFICES
DONALD D. STARK
A PROFESSIONAL CORPORATION
SUITE 201
2061 BUSINESS CENTER DRIVE
IRVINE, CALIFORNIA 92715
(714) 752-8971

D. REPLENISHMENT

49. Sources of Supplemental Water. Supplemental water may be obtained by Watermaster from any available source. Watermaster shall seek to obtain the best available quality of supplemental water at the most reasonable cost for recharge in the Basin. To the extent that costs of replenishment water may vary between pools, each pool shall be liable only for the costs attributable to its required replenishment. Available sources may include, but are not limited to:

(a) Reclaimed Water. There exist a series of agreements generally denominated the Regional Waste Water Agreements between CBMWD and owners of the major municipal sewer systems within the basin. Under those agreements, which are recognized hereby but shall be unaffected and unimpaired by this judgment, substantial quantities of reclaimed water may be made available for replenishment purposes. There are additional sources of reclaimed water which are, or may become, available to Watermaster for said purposes. Maximum beneficial use of reclaimed water shall be given high priority by Watermaster.

(b) State Water. State water constitutes a major available supply of supplemental water. In the case of State Water, Watermaster purchases shall comply with the water service provisions of the State's water service contracts. More specifically, Watermaster shall purchase State Water from MWD for replenishment of excess production within CBMWD, WMWD and PVMWD, and from SBVMWD to replenish excess production within SBVMWD's boundaries in Chino Basin, except to the

LAW OFFICES
DONALD D. STARK
A PROFESSIONAL CORPORATION
SUITE 201
2061 BUSINESS CENTER DRIVE
IRVINE, CALIFORNIA 92715
(714) 752-8971

extent that MWD and SBVMWD give their consent as required by such State water service contracts.

(c) Local Import. There exist facilities and methods for importation of surface and ground water supplies from adjacent basins and watersheds.

(d) Colorado River Supplies. MWD has water supplies available from its Colorado River Aqueduct.

50. Methods of Replenishment. Watermaster may accomplish replenishment of overproduction from the Basin by any reasonable method, including:

(a) Spreading and percolation or Injection of water in existing or new facilities, subject to the provisions of Paragraphs 19, 25 and 26 hereof.

(b) In Lieu Procedures. Watermaster may make, or cause to be made, deliveries of water for direct surface use, in lieu of ground water production.

E. REVENUES

51. Production Assessment. Production assessments, on whatever basis, may be levied by Watermaster pursuant to the pooling plan adopted for the applicable pool.

52. Minimal Producers. Minimal Producers shall be exempted from payment of production assessments, upon filing of production reports as provided in Paragraph 47 of this Judgment, and payment of an annual five dollar ($5.00) administrative fee as specified by Watermaster rules.

53. Assessment Proceeds -- Purposes. Watermaster shall have the power to levy assessments against the parties (other than minimal pumpers) based upon production during the preceding period

LAW OFFICES
DONALD D. STARK
A PROFESSIONAL CORPORATION
SUITE 201
2061 BUSINESS CENTER DRIVE
IRVINE, CALIFORNIA 92715
(714) 752-8971

of assessable production, whether quarterly, semi-annually or annually, as may be determined most practical by Watermaster or the affected Pool Committee.

54. Administrative Expenses. The expenses of administration of this Physical Solution shall be categorized as either (a) general Watermaster administrative expense, or (b) special project expense.

(a) General Watermaster Administrative Expense shall include office rental, general personnel expense, supplies and office equipment, and related incidental expense and general overhead.

(b) Special Project Expense shall consist of special engineering, economic or other studies, litigation expense, meter testing or other major operating expenses. Each such project shall be assigned a Task Order number and shall be separately budgeted and accounted for.

General Watermaster administrative expense shall be allocated and assessed against the respective pools based upon allocations made by the Watermaster, who shall make such allocations based upon generally accepted cost accounting methods. Special Project Expense shall be allocated to a specific pool, or any portion thereof, only upon the basis of prior express assent and finding of benefit by the Pool Committee, or pursuant to written order of the Court.

55. Assessments -- Procedure. Assessments herein provided for shall be levied and collected as follows:

(a) Notice of Assessment. Watermaster shall give written notice of all applicable assessments to each party on

LAW OFFICES
DONALD D. STARK
A PROFESSIONAL CORPORATION
SUITE 201
2061 BUSINESS CENTER DRIVE
IRVINE, CALIFORNIA 92715
(714) 752-8971

or before ninety (90) days after the end of the production period to which such assessment is applicable.

(b) Payment. Each assessment shall be payable on or before thirty (30) days after notice, and shall be the obligation of the party or successor owning the water production facility at the time written notice of assessment is given, unless prior arrangement for payment by others has been made in writing and filed with Watermaster.

(c) Delinquency. Any delinquent assessment shall bear interest at 10% per annum (or such greater rate as shall equal the average current cost of borrowed funds to the Watermaster) from the due date thereof. Such delinquent assessment and interest may be collected in a show-cause proceeding herein instituted by the Watermaster, in which case the Court may allow Watermaster its reasonable costs of collection, including attorney's fees.

56. Accumulation of Replenishment Water Assessment Proceeds. In order to minimize fluctuation in assessment and to give Watermaster flexibility in purchase and spreading of replenishment water, Watermaster may make reasonable accumulations of replenishment water assessment proceeds. Interest earned on such retained funds shall be added to the account of the pool from which the funds were collected and shall be applied only to the purchase of replenishment water.

57. Effective Date. The effective date for accounting and operation under this Physical Solution shall be July 1, 1977, and the first production assessments hereunder shall be due after July 1, 1978. Watermaster shall, however, require installation of

LAW OFFICES
DONALD D. STARK
A PROFESSIONAL CORPORATION
SUITE 201
2061 BUSINESS CENTER DRIVE
IRVINE, CALIFORNIA 92715
(714) 752-8971

meters or measuring devices and establish operating procedures immediately, and the costs of such Watermaster activity (not including the cost of such meters and measuring devices) may be recovered in the first administrative assessment in 1978.

VII. MISCELLANEOUS PROVISIONS

58. Designation of Address for Notice and Service. Each party shall designate the name and address to be used for purposes of all subsequent notices and service herein, either by its endorsement on the Stipulation for Judgment or by a separate designation to be filed within thirty (30) days after Judgment has been served. Said designation may be changed from time to time by filing a written notice of such change with the Watermaster. Any party desiring to be relieved of receiving notices of Watermaster or committee activity may file a waiver of notice on a form to be provided by Watermaster. Thereafter such party shall be removed from the Active Party list. Watermaster shall maintain at all times a current list of active parties and their addresses for purposes of service. Watermaster shall also maintain a full current list of names and addresses of all parties or their successors, as filed herein. Copies of such lists shall be available, without cost, to any party, the Advisory Committee or any Pool Committee upon written request therefor.

59. Service of Documents. Delivery to or service upon any party or active party by the Watermaster, by any other party, or by the Court, of any item required to be served upon or delivered to such party or active party under or pursuant to the Judgment shall be made personally or by deposit in the United States mail, first

LAW OFFICES
DONALD D. STARK
A PROFESSIONAL CORPORATION
SUITE 201
2061 BUSINESS CENTER DRIVE
IRVINE, CALIFORNIA 92715
(714) 752-8971

class, postage prepaid, addressed to the designee and at the address in the latest designation filed by such party or active party.

60. Intervention After Judgment. Any non-party assignee of the adjudicated appropriative rights of any appropriator, or any other person newly proposing to produce water from Chino Basin, may become a party to this judgment upon filing a petition in intervention. Said intervention must be confirmed by order of this Court. Such intervenor shall thereafter be a party bound by this judgment and entitled to the rights and privileges accorded under the Physical Solution herein, through the pool to which the Court shall assign such intervenor.

61. Loss of Rights. Loss, whether by abandonment, forfeiture or otherwise, of any right herein adjudicated shall be accomplished only (1) by a written election by the owner of the right filed with Watermaster, or (2) by order of the Court upon noticed motion and after hearing.

62. Scope of Judgment. Nothing in this Judgment shall be deemed to preclude or limit any party in the assertion against a neighboring party of any cause of action now existing or hereafter arising based upon injury, damage or depletion of water supply available to such party, proximately caused by nearby pumping which constitutes an unreasonable interference with such complaining party's ability to extract ground water.

63. Judgment Binding on Successors. This Judgment and all provisions thereof are applicable to and binding upon not only the parties to this action, but also upon their respective heirs, executors, administrators, successors, assigns, lessees and

LAW OFFICES
DONALD D. STARK
A PROFESSIONAL CORPORATION
SUITE 201
2061 BUSINESS CENTER DRIVE
IRVINE, CALIFORNIA 92715
(714) 752-8971

licensees and upon the agents, employees and attorneys in fact of all such persons.

64. Costs. No party shall recover any costs in this proceeding from any other party.

Dated: JAN 27 1978.

Arthur B. Ulein
Judge

LAW OFFICES
DONALD D. STARK
A PROFESSIONAL CORPORATION
SUITE 201
2061 BUSINESS CENTER DRIVE
IRVINE, CALIFORNIA 92715
(714) 752-8971

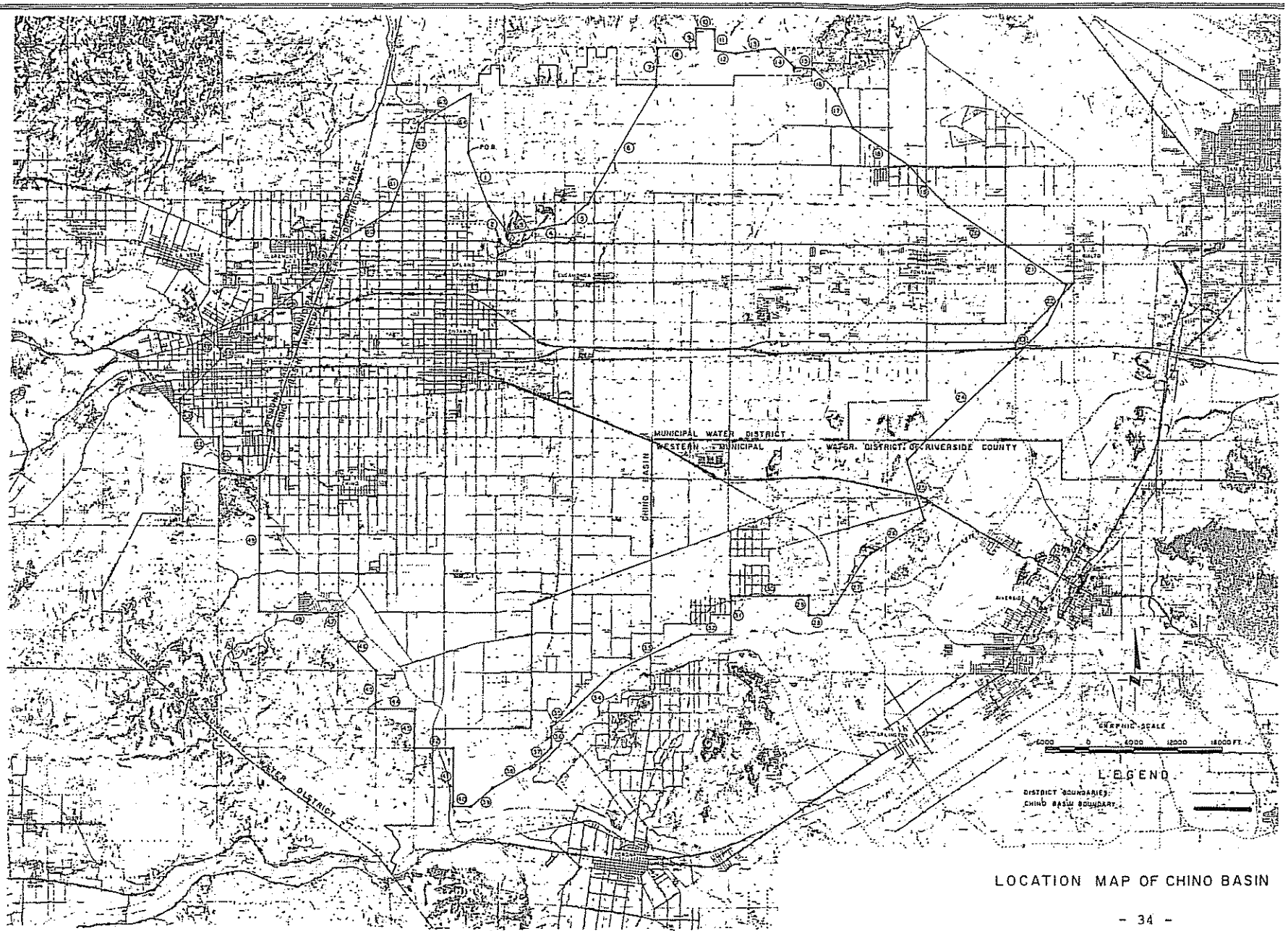

LOCATION MAP OF CHINO BASIN

EXHIBIT A

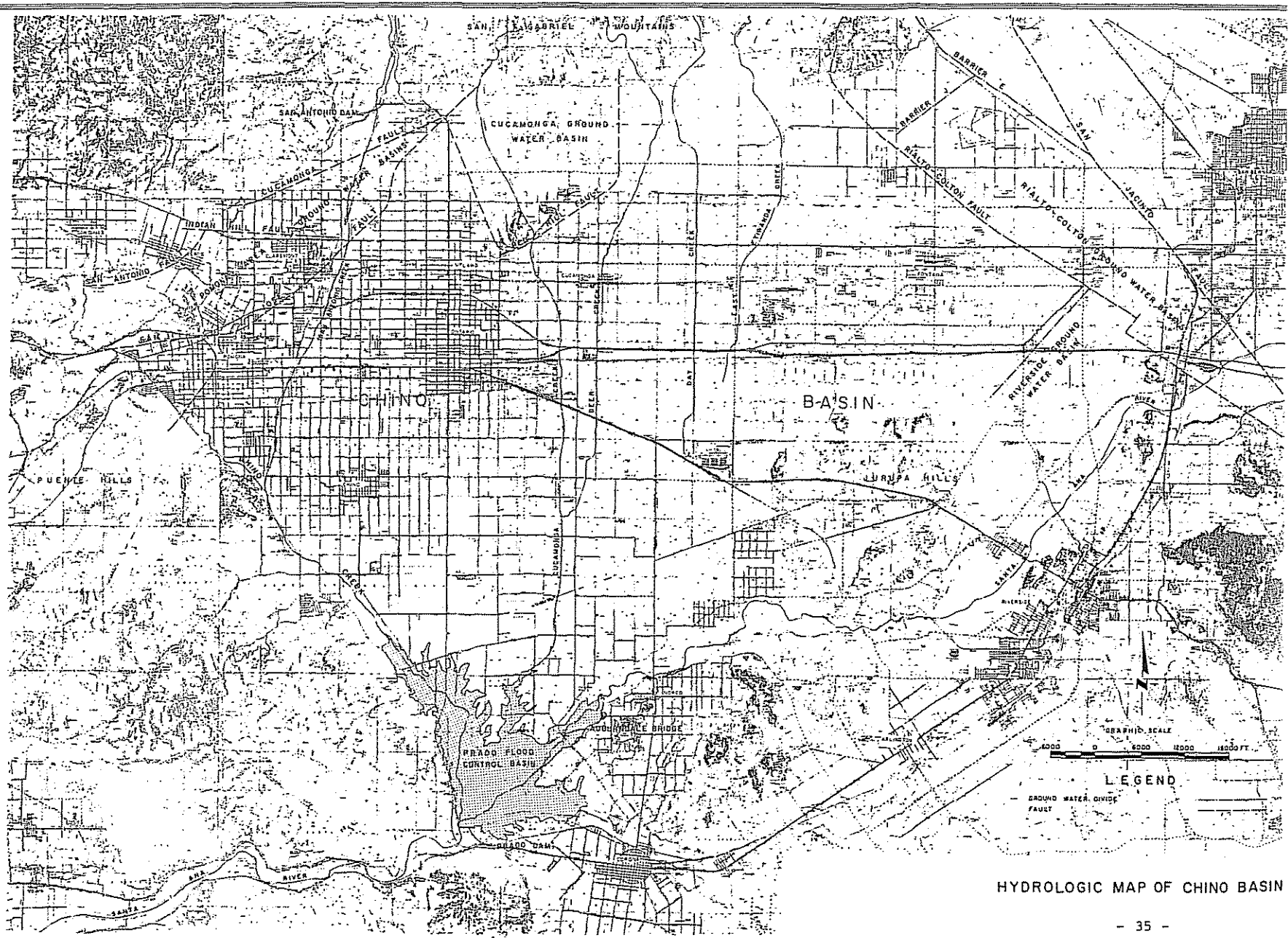

HYDROLOGIC MAP OF CHINO BASIN

EXHIBIT 8

LAW OFFICES
DONALD D. STARK
A PROFESSIONAL CORPORATION
SUITE 201
2061 BUSINESS CENTER DRIVE
IRVINE, CALIFORNIA 92715
(714) 752-8971

STIPULATING OVERLYING AGRICULTURAL PRODUCERS

STATE OF CALIFORNIA
COUNTY OF SAN BERNARDINO
Abacherli Dairy, Inc.
Abacherli, Frank
Abacherli, Shirley
Abbona, Anna
Abbona, James
Abbona, Jim
Abbona, Mary
Agliani, Amelia H.
Agman, Inc.
Aguerre, Louis B.
Ahmanson Trust Co.
Akiyama, Shizuye
Akiyama, Tomoo
Akkerman, Dave
Albers, J. N.
Albers, Nellie
Alewyn, Jake J.
Alewyn, Normalee
Alger, Mary D.
Alger, Raymond
Allen, Ben F.
Allen, Jane F.
Alta-Dena Dairy
Anderson Farms
Anguiano, Sarah L. S.
Anker, Gus
Aphessetche, Xavier
Arena Mutual Water Assn.
Armstrong Nurseries, Inc.
Arretche, Frank
Arretche, Jean Pierre
Arvidson, Clarence F.
Arvidson, Florence
Ashley, George W.
Ashley, Pearl E.
Atlas Farms
Atlas Ornamental Iron Works, Inc.
Aukeman, Carol
Aukeman, Lewis
Ayers, Kenneth C., aka
Kelley Ayers
Bachoc, Raymond
Baldwin, Edgar A.
Baldwin, Lester
Banbury, Carolyn
Bangma Dairy
Bangma, Arthur
Bangma, Ida
Bangma, Martin
Bangma, Sam
Barba, Anthony B.
Barba, Frank
Barcellos, Joseph
Barnhill, Maurine W.

LAW OFFICES
DONALD D. STARK
A PROFESSIONAL CORPORATION
SUITE 201
2061 BUSINESS CENTER DRIVE
IRVINE, CALIFORNIA 92715
(714) 752-8971

Barnhill, Paul	Boersma, Angie
Bartel, Dale	Boersma, Berdina
Bartel, Ursula	Boersma, Frank
Bartel, Willard	Boersma, Harry
Barthelemy, Henry	Boersma, Paul
Barthelemy, Roland	Boersma, Sam
Bassler, Donald V., M.D.	Boersma, William L.
Bates, Lowell R.	Bohlander & Holmes, Inc.
Bates, Mildred L.	Bokma, Peter
Beahm, James W.	Bollema, Jacob
Beahm, Joan M.	Boonstoo, Edward
Bekendam, Hank	Bootsma, Jim
Bekendam, Pete	Borba, Dolene
Bello, Eugene	Borba, Dolores
Bello, Olga	Borba, Emily
Beltman, Evelyn	Borba, George
Beltman, Tony	Borba, John
Bergquist Properties, Inc.	Borba, John & Sons
Bevacqua, Joel A.	Borba, John Jr.
Bevacqua, Marie B.	Borba, Joseph A.
Bidart, Bernard	Borba, Karen E.
Bidart, Michael J.	Borba, Karen M.
Binnell, Wesley	Borba, Pete, Estate of
Black, Patricia E.	Borba, Ricci
Black, Victor	Borba, Steve
Bodger, John & Sons Co.	Borba, Tom
Boer, Adrian	Bordisso, Alleck
Boersma and Wind Dairy	Borges, Angelica M.

LAW OFFICES
DONALD D. STARK
A PROFESSIONAL CORPORATION
SUITE 201
2061 BUSINESS CENTER DRIVE
IRVINE, CALIFORNIA 92715
(714) 752-8971

Borges, Bernadette
Borges, John O.
Borges, Linda L.
Borges, Manual Jr.
Borges, Tony
Bos, Aleid
Bos, Gerrit
Bos, John
Bos, John
Bos, Margaret
Bos, Mary
Bos, Mary Beth
Bos, Tony
Bosch, Henrietta
Bosch, Peter T.
Boschma, Betty
Boschma, Frank
Boschma, Greta
Boschma, Henry
Bosma, Dick
Bosma, Florence G.
Bosma, Gerrit
Bosma, Jacob J.
Bosma, Jeanette Thea
Bosman, Frank
Bosman, Nellie
Bosnyak, Goldie M.
Bosnyak, Martin
Bothof, Roger W.
Bouma, Cornie
Bouma, Emma
Bouma, Henry P.
Bouma, Martin
Bouma, Peter G. & Sons Dairy
Bouma, Ted
Bouman, Helen
Bouman, Sam
Bower, Mabel E.
Boys Republic
Breedyk, Arie
Breedyk, Jessie
Briano Brothers
Briano, Albert
Briano, Albert Trustee for
Briano, Albert Frank
Briano, Lena
Brink, Russell N.
Brinkerhoff, Margaret
Brinkerhoff, Robert L.
Britschgi, Florence
Britschgi, Magdalena Garetto
Britschgi, Walter P.
Brommer, Marvin
Brookside Enterprizes, dba
Brookside Vineyard Co.
Brothers Three Dairy

LAW OFFICES
DONALD D. STARK
A PROFESSIONAL CORPORATION
SUITE 201
2061 BUSINESS CENTER DRIVE
IRVINE, CALIFORNIA 92715
(714) 752-8971

Brown, Eugene
Brun, Martha M.
Brun, Peter Robert
Buma, Duke
Buma, Martha
Bunse, Nancy
Bunse, Ronnie L.
Caballero, Bonnie L.
Caballero, Richard F.
Cable Airport Inc.
Cadlini, Donald
Cadlini, Jesse R.
Cadlini, Marie Edna
Cambio, Anna
Cambio, Charles, Estate of
Cambio, William V.
Cardoza, Florence
Cardoza, Olivi
Cardoza, Tony
Carnesi, Tom
Carver, Robt M., Trustee
Cauffman, John R.
Chacon Bros.
Chacon, Elvera P.
Chacon, Joe M.
Chacon, Robert M.
Chacon, Virginia L.
Chez, Joseph C.
Chino Corona Investment
Chino Water Co.
Christensen, Leslie
Christensen, Richard G.
Christian, Ada R.
Christian, Harold F.
Christy, Ella J.
Christy, Ronald S.
Cihigoyenetche, Jean
Cihigoyenetche, Leona
Cihigoyenetche, Martin
Clarke, Arthur B.
Clarke, Nancy L.
Clarke, Phyllis J.
Coelho, Isabel
Coelho, Joe A. Jr.
Collins, Howard E.
Collins, Judith F.
Collinsworth, Ester L.
Collinsworth, John E.
Collinsworth, Shelby
Cone Estate (05-2-00648/649)
Consolidated Freightways Corp.
of Delaware
Corona Farms Co.
Corra, Rose
Costa, Dimas S.
Costa, Laura

LAW OFFICES
DONALD D. STARK
A PROFESSIONAL CORPORATION
SUITE 201
2061 BUSINESS CENTER DRIVE
IRVINE, CALIFORNIA 92715
(714) 752-8971

Costa, Myrtle	De Boer, L. H.
Costamagna, Antonio	De Boer, Sidney
Costamagna, Joseph	De Bos, Andrew
Cousyn, Claus B.	De Graaf, Anna Mae
Cramer, Carole F.	De Graaf, Gerrit
Cramer, William R.	De Groot, Dick
Crossroads Auto Dismantlers, Inc.	De Groot, Dorothy
Crouse, Beatrice I.	De Groot, Ernest
Crouse, Roger	De Groot, Henrietta
Crowley, Juanita C.	De Groot, Jake
Crowley, Ralph	De Groot, Pete Jr.
Cucamonga Vintners	De Haan, Bernadena
D'Astici, Teresa	De Haan, Henry
Da Costa, Cecilia B.	De Hoog, Adriana
Da Costa, Joaquim F.	De Hoog, Joe
Daloisio, Norman	De Hoog, Martin
De Berard Bros.	De Hoog, Martin L.
De Berard, Arthur, Trustee	De Hoog, Mitch
De Berard, Charles	De Hoog, Tryntje
De Berard, Chas., Trustee	De Jager, Cobi
De Berard, Helan J.	De Jager, Edward D.
De Berard, Robert	De Jong Brothers Dairy
De Berard, Robert, Trustee	De Jong, Cornelis
De Bie, Adrian	De Jong, Cornelius
De Bie, Henry	De Jong, Grace
De Bie, Margaret M.	De Jong, Jake
De Bie, Marvin	De Jong, Lena
De Boer, Fred	De Leeuw, Alice

De Leeuw, Sam	Dirkse, Catherine
De Soete, Agnes	Dirkse, Charles C.
De Soete, Andre	Dixon, Charles E.
De Vries, Abraham	Dixon, Geraldine A.
De Vries, Case	Doesberg, Hendrica
De Vries, Dick	Doesburg, Theodorus P.
De Vries, Evelyn	Dolan, Marion
De Vries, Henry, Estate of	Dolan, Michael H.
De Vries, Hermina	Dominguez, Helen
De Vries, Jack H.	Dominguez, Manual
De Vries, Jane	Donkers, Henry A.
De Vries, Janice	Donkers, Nellie G.
De Vries, John	Dotta Bros.
De Vries, John J.	Douma Brothers Dairy
De Vries, Neil	Douma, Betty A.
De Vries, Ruth	Douma, Fred A.
De Vries, Theresa	Douma, Hendrika
De Wit, Gladys	Douma, Herman G.
De Wit, Peter S.	Douma, Narleen J.
De Wyn, Evert	Douma, Phillip M.
De Zoete, Hattie V.	Dow Chemical Co.
De Zoete, Leo A.	Dragt, Rheta
Decker, Hallie	Dragt, William
Decker, Henry A.	Driftwood Dairy Farm
Demmer, Ernest	Droogh, Case
Di Carlo, Marie	Duhalde, Marian
Di Carlo, Victor	Duhalde, Lauren
Di Tommaso, Frank	Duits, Henrietta

LAW OFFICES
DONALD D. STARK
A PROFESSIONAL CORPORATION
SUITE 201
2061 BUSINESS CENTER DRIVE
IRVINE, CALIFORNIA 92715
(714) 752-8971

LAW OFFICES
DONALD D. STARK
A PROFESSIONAL CORPORATION
SUITE 201
2061 BUSINESS CENTER DRIVE
IRVINE, CALIFORNIA 92715
(714) 752-8971

Duits, John
Dunlap, Edna Kraemer,
Estate of
Durrington, Glen
Durrington, William F.
Dusi, John, Sr.
Dykstra, Dick
Dykstra, John
Dykstra, John & Sons
Dykstra, Wilma
Dyt, Cor
Dyt, Johanna
E and S Grape Growers
Eaton, Thomas, Estate of
Echeverria, Juan
Echeverria, Carlos
Echeverria, Pablo
Eilers, E. Myrle
Eilers, Henry W.
El Prado Golf Course
Ellsworth, Rex C.
Engelsma, Jake
Engelsma, Susan
Escojeda, Henry
Etiwanda Grape Products Co.
Euclid Ave. Investment One
Euclid Ave. Investment Four
Euclid Ave. Three Investment
Excelsior Farms
F.D.I.C.
Fagundes, Frank M.
Fagundes, Mary
Fernandes, Joseph Jr.
Fernandes, Velma C.
Ferraro, Ann
Ferreira, Frank J.
Ferreira, Joe C. Jr.
Ferreira, Narcie
Filippi, J. Vintage Co.
Filippi, Joseph
Filippi, Joseph A.
Filippi, Mary E.
Fitzgerald, John R.
Flameling Dairy Inc.
Flamingo Dairy
Foss, Douglas E.
Foss, Gerald R.
Foss, Russel
Fred & John Troost No. 1 Inc.
Fred & Maynard Troost No. 2 Inc.
Freitas, Beatriz
Freitas, Tony T.
Gakle, Louis L.
Galleano Winery, Inc.
Galleano, Bernard D.
Galleano, D.
Galleano, Mary M.

LAW OFFICES
DONALD D. STARK
A PROFESSIONAL CORPORATION
SUITE 201
2061 BUSINESS CENTER DRIVE
IRVINE, CALIFORNIA 92715
(714) 752-8971

Garcia, Pete
Gardner, Leland V.
Gardner, Lola M.
Garrett, Leonard E.
Garrett, Patricia T.
Gastelluberry, Catherine
Gastelluberry, Jean
Gilstrap, Glen E.
Gilstrap, Marjorie J.
Godinho, John
Godinho, June
Gonsalves, Evelyn
Gonsalves, John
Gorzeman, Geraldine
Gorzeman, Henry A.
Gorzeman, Joe
Govea, Julia
Goyenetche, Albert
Grace, Caroline E.
Grace, David J.
Gravatt, Glenn W.
Gravatt, Sally Mae
Greydanus Dairy, Inc.
Greydanus, Rena
Griffin Development Co.
Haagsma, Dave
Haagsma, John
Hansen, Mary D.
Hansen, Raymond F.
Hanson, Ardeth W.
Harada, James T.
Harada, Violet A.
Haringa, Earl and Sons
Haringa, Herman
Haringa, Rudy
Haringa, William
Harper, Cecilia de Mille
Harrington, Winona
Harrison, Jacqueline A.
Hatanaka, Kenichi
Heida, Annie
Heida, Don
Heida, Jim
Heida, Sam
Helms, Addison D.
Helms, Irma A.
Hermans, Alma I.
Hermans, Harry
Hettinga, Arthur
Hettinga, Ida
Hettinga, Judy
Hettinga, Mary
Hettinga, Wilbur
Heublein, Inc., Grocery Products Group
Hibma, Catherine M.

Hibma, Sidney
Hicks, Kenneth I.
Hicks, Minnie M.
Higgins Brick Co.
Highstreet, Alfred V.
Highstreet, Evada V.
Hilarides, Bertha as Trustee
Hilarides, Frank
Hilarides, John as Trustee
Hindelang, Tillie
Hindelang, William
Hobbs, Bonnie C.
Hobbs, Charles W.
Hobbs, Hazel I.
Hobbs, Orlo M.
Hoekstra, Edward
Hoekstra, George
Hoekstra, Grace
Hoekstra, Louie
Hofer, Paul B.
Hofer, Phillip F.
Hofstra, Marie
Hogeboom, Jo Ann M.
Hogeboom, Maurice D.
Hogg, David V.
Hogg, Gene P.
Hogg, Warren G.
Hohberg, Edith J.
Hohberg, Harold C.
Hohberg, Harold W.
Holder, Arthur B.
Holder, Dorothy F.
Holmes, A. Lee
Holmes, Frances P.
Hoogeboom, Gertrude
Hoogeboom, Pete
Hoogendam, John
Hoogendam, Tena
Houssels, J. K. Thoroughbred Farm
Hunt Industries
Idsinga, Ann
Idsinga, William W.
Imbach Ranch, Inc.
Imbach, Kenneth E.
Imbach, Leonard K.
Imbach, Oscar K.
Imbach, Ruth M.
Indaburu, Jean
Indaburu, Marceline
Iseli, Kurt H.
Ito, Kow
J & B Dairy Inc.
Jaques, Johnny C. Jr.
Jaques, Mary
Jaques, Mary Lou

LAW OFFICES
DONALD D. STARK
A PROFESSIONAL CORPORATION
SUITE 201
2061 BUSINESS CENTER DRIVE
IRVINE, CALIFORNIA 92715
(714) 752-8971

Jay Em Bee Farms

Johnson Bro's Egg Ranches, Inc.

Johnston, Ellwood W.

Johnston, George F. Co.

Johnston, Judith H.

Jones, Leonard P.

Jongsma & Sons Dairy

Jongsma, Diana A.

Jongsma, Dorothy

Jongsma, George

Jongsma, Harold

Jongsma, Henry

Jongsma, John

Jongsma, Nadine

Jongsma, Tillie

Jordan, Marjorie G.

Jordan, Troy O.

Jorritsma, Dorothy

Juliano, Albert

Kamper, Cornelis

Kamstra, Wilbert

Kaplan, Lawrence J.

Kasbergen, Martha

Kasbergen, Neil

Kazian, Angelen Estate of

Kingsway Const. Corp.

Klapps Market

Kline, James K.

Knevelbaard, John

Knudsen, Ejnar

Knudsen, Karen M.

Knudsen, Kenneth

Knudson, Robert

Knudson, Darlene

Koel, Helen S.

Koetsier, Gerard

Koetsier, Gerrit J.

Koetsier, Jake

Koning, Fred W.

Koning, Gloria

Koning, J. W. Estate

Koning, James A.

Koning, Jane

Koning, Jane C.

Koning, Jennie

Koning, John

Koning, Victor A.

Kooi Holstein Corporation

Koolhaas, Kenneth E.

Koolhaas, Simon

Koolhaas, Sophie Grace

Koopal, Grace

Koopal, Silas

Koopman, Eka

Koopman, Gene T.

Koopman, Henry G.

LAW OFFICES
DONALD D. STARK
A PROFESSIONAL CORPORATION
SUITE 201
2061 BUSINESS CENTER DRIVE
IRVINE, CALIFORNIA 92715
(714) 752-8971

Koopman, Ted

Koopman, Tena

Koot, Nick

Koster, Aart

Koster, Frances

Koster, Henry B.

Koster, Nellie

Kroes, Jake R.

Kroeze, Bros

Kroeze, Calvin E.

Kroeze, John

Kroeze, Wesley

Kruckenberg, Naomi

Kruckenberg, Perry

L. D. S. Welfare Ranch

Labrucherie, Mary Jane

Labrucherie, Raymond F.

Lako, Samuel

Landman Corp.

Lanting, Broer

Lanting, Myer

Lass, Jack

Lass, Sandra L.

Lawrence, Cecelia, Estate of

Lawrence, Joe H., Estate of

Leal, Bradley W.

Leal, John C.

Leal, John Craig

Leck, Arthur A.

Leck, Evelyn M.

Lee, Harold E.

Lee, Helen J.

Lee, Henrietta C.

Lee, R. T. Construction Co.

Lekkerkerk, Adriana

Lekkerkerk, L. M.

Lekkerkerker, Nellie

Lekkerkerker, Walt

Lewis Homes of California

Livingston, Dorothy M.

Livingston, Rex E.

Lokey, Rosemary Kraemer

Lopes, Candida A.

Lopes, Antonio S.

Lopez, Joe D.

Lourenco, Carlos, Jr.

Lourenco, Carmelina P.

Lourenco, Jack C.

Lourenco, Manual H.

Lourenco, Mary

Lourenco, Mary

Luiten, Jack

Luiz, John M.

Luna, Christine I.

Luna, Ruben T.

Lusk, John D. and Son
a California corporation

LAW OFFICES
DONALD D. STARK
A PROFESSIONAL CORPORATION
SUITE 201
2061 BUSINESS CENTER DRIVE
IRVINE, CALIFORNIA 92715
(714) 752-8971

LAW OFFICES
DONALD D. STARK
A PROFESSIONAL CORPORATION
SUITE 201
2061 BUSINESS CENTER DRIVE
IRVINE, CALIFORNIA 92715
(714) 752-8971

Lyon, Gregory E.
Lyon, Paula E.
M & W Co. #2
Madole, Betty M.
Madole, Larry B.
Marquez, Arthur
Marquine, Jean
Martin, Lelon O.
Martin, Leon O.
Martin, Maria D.
Martin, Tony J.
Martins, Frank
Mathias, Antonio
Mc Cune, Robert M.
Mc Masters, Gertrude
Mc Neill, J. A.
Mc Neill, May F.
Mees, Leon
Mello and Silva Dairy
Mello and Sousa Dairy
Mello, Emilia
Mello, Enos C.
Mello, Mercedes
Mendiondo, Catherine
Mendiondo, Dominique
Meth. Hosp. - Sacramento
Metzger, R. S.
Metzger, Winifred
Mickel, Louise
Miersma, Dorothy
Meirsma, Harry C.
Minaberry, Arnaud
Minaberry, Marie
Mistretta, Frank J.
Mocho and Plaa Inc.
Mocho, Jean
Mocho, Noeline
Modica, Josephine
Montes, Elizabeth
Montes, Joe
Moons, Beatrice
Moons, Jack
Moramarco, John A. Enterprises
Moreno, Louis W.
Moss, John R.
Motion Pictures Associates, Inc.
Moynier, Joe
Murphy, Frances V.
Murphy, Myrl L.
Murphy, Naomi
Nanne, Martin Estate of
Nederend, Betty
Nederend, Hans
Norfolk, James
Norfolk, Martha
Notrica, Louis

Nyberg, Lillian N.
Nyenhuis, Annie
Nyenhuis, Jim
Occidental Land Research
Okumura, Marion
Okumura, Yuiche
Oldengarm, Effie
Oldengarm, Egbert
Oldengarm, Henry
Oliviera, Manuel L.
Oliviera, Mary M.
Olson, Albert
Oltmans Construction Co.
Omlin, Anton
Omlin, Elsie L.
Ontario Christian School Assn.
Oord, John
Oostdam, Jacoba
Oostdam, Pete
Oosten, Agnes
Oosten, Anthonia
Oosten, Caroline
Oosten, John
Oosten, Marinus
Oosten, Ralph
Orange County Water District
Ormonde, Manuel
Ormonde, Pete, Jr.
Ormonde, Viva
Ortega, Adeline B.
Ortega, Bernard Dino
Osterkamp, Joseph S.
Osterkamp, Margaret A.
P I E Water Co.
Palmer, Eva E.
Palmer, Walter E.
Parente, Luis S.
Parente, Mary Borba
Parks, Jack B.
Parks, Laura M.
Patterson, Lawrence E. Estate of
Payne, Clyde H.
Payne, Margo
Pearson, Athelia K.
Pearson, William C.
Pearson, William G.
Pene, Robert
Perian, Miller
Perian, Ona E.
Petrissans, Deanna
Petrissans, George
Petrissans, Jean P.
Petrissans, Marie T.
Pickering, Dora M.
(Mrs. A. L. Pickering)
Pierce, John

LAW OFFICES
DONALD D. STARK
A PROFESSIONAL CORPORATION
SUITE 201
2061 BUSINESS CENTER DRIVE
IRVINE, CALIFORNIA 92715
(714) 752-8971

LAW OFFICES
DONALD D. STARK
A PROFESSIONAL CORPORATION
SUITE 201
2061 BUSINESS CENTER DRIVE
IRVINE, CALIFORNIA 92715
(714) 752-8971

Pierce, Sadie
Pietszak, Sally
Pine, Joe
Pine, Virginia
Pires, Frank
Pires, Marie
Plaa, Jeanne
Plaa, Michel
Plantenga, Agnes
Plantenga, George
Poe, Arlo D.
Pomona Cemetery Assn.
Porte, Cecelia, Estate of
Porte, Garritt, Estate of
Portsmouth, Vera McCarty
Ramella, Mary M.
Ramirez, Concha
Rearick, Hildegard H.
Rearick, Richard R.
Reinalda, Clarence
Reitsma, Greta
Reitsma, Louis
Rice, Bernice
Rice, Charlie E.
Richards, Karin
(Mrs. Ronnie Richards)
Richards, Ronald L.
Ridder, Jennie Wassenaar
Righetti, A. T.
Riley, George A.
Riley, Helen C.
Robbins, Jack K.
Rocha, John M.
Rocha, Jose C.
Rodrigues, John
Rodrigues, Manuel
Rodrigues, Manuel, Jr.
Rodrigues, Mary L.
Rodriquez, Daniel
Rogers, Jack D.
Rohrer, John A.
Rohrer, Theresa D.
Rohrs, Elizabeth H.
Rossetti, M. S.
Roukema, Angeline
Roukema, Ed.
Roukema, Nancy
Roukema, Siebren
Ruderian, Max J.
Russell, Fred J.
Rusticus, Ann
Rusticus, Charles
Rynsburger, Arie
Rynsburger, Berdena, Trust
Rynsburger, Joan Adele
Rynsburger, Thomas

LAW OFFICES
DONALD D. STARK
A PROFESSIONAL CORPORATION
SUITE 201
2061 BUSINESS CENTER DRIVE
IRVINE, CALIFORNIA 92715
(714) 752-8971

S. P. Annex, Inc.
Salisbury, Elinor J.
Sanchez, Edmundo
Sanchez, Margarita O.
Santana, Joe Sr.
Santana, Palmira
Satragni, John B. Jr.
Scaramella, George P.
Schaafsma Bros.
Schaafsma, Jennie
Schaafsma, Peter
Schaafsma, Tom
Schaap, Andy
Schaap, Ids
Schaap, Maria
Schacht, Sharon C.
Schakel, Audrey
Schakel, Fred
Schmid, Olga
Schmidt, Madeleine
Schoneveld, Evert
Schoneveld, Henrietta
Schoneveld, John
Schoneveld, John Allen
Schug, Donald E.
Schug, Shirley A.
Schuh, Bernatta M.
Schuh, Harold H.
Scott, Frances M.
Scott, Linda F.
Scott, Stanley A.
Scritsmier, Lester J.
Serl, Charles A.
Serl, Rosalie P.
Shady Grove Dairy, Inc.
Shamel, Burt A.
Shelby, Harold E.
Shelby, John A.
Shelby, Velma M.
Shelton, Alice A.
Sherwood, Robert W.
Sherwood, Sheila J.
Shue, Eva
Shue, Gilbert
Sieperda, Anne
Sieperda, James
Sigrist, Hans
Sigrist, Rita
Silveira, Arline L.
Silveira, Frank
Silveira, Jack
Silveira, Jack P. Jr.
Simas, Dolores
Simas, Joe
Singleton, Dean
Singleton, Elsie R.

LAW OFFICES
DONALD D. STARK
A PROFESSIONAL CORPORATION
SUITE 201
2061 BUSINESS CENTER DRIVE
IRVINE, CALIFORNIA 92715
(714) 752-8971

Sinnott, Jim	Staal, John
Sinnott, Mildred B.	Stahl, Zippora P.
Slegers, Dorothy	Stampfl, Berta
Slegers, Hubert J.	Stampfl, William
Slegers, Jake	Stanley, Robert E.
Slegers, Jim	Stark, Everett
Slegers, Lenwood M.	Stellingwerf, Andrew
Slegers, Martha	Stellingwerf, Henry
Slegers, Tesse J.	Stellingwerf, Jenette
Smith, Edward S.	Stellingwerf, Shana
Smith, Helen D.	Stellingwerf, Stan
Smith, James E.	Stelzer, Mike C.
Smith, Keith J.	Sterk, Henry
Smith, Lester W.	Stiefel, Winifred
Smith, Lois Maxine	Stiefel, Jack D.
Smith, Marjorie W.	Stigall, Richard L.
Soares, Eva	Stigall, Vita
Sogioka, Mitsuyoshi	Stockman's Inn
Sogioka, Yoshimato	Stouder, Charlotte A.
Sousa, Sam	Stouder, William C.
Southern Pacific Land Co.	Struikmans, Barbara
Southfield, Eddie	Struikmans, Gertie
Souza, Frank M.	Struikmans, Henry Jr.
Souza, Mary T.	Struikmans, Henry Sr.
Spickerman, Alberta	Struikmans, Nellie
Spickerman, Florence	Swager, Edward
Spickerman, Rudolph	Swager, Gerben
Spyksma, John	Swager, Johanna

Swager, Marion
Swierstra, Donald
Swierstra, Fanny
Sybrandy, Ida
Sybrandy, Simon
Sytsma, Albert
Sytsma, Edith
Sytsma, Jennie
Sytsma, Louie
Te Velde, Agnes
Te Velde, Bay
Te Velde, Bernard A.
Te Velde, Bonnie
Te Velde, Bonnie G.
Te Velde, George
Te Velde, George, Jr.
Te Velde, Harm
Te Velde, Harriet
Te Velde, Henry J.
Te Velde, Jay
Te Velde, Johanna
Te Velde, John H.
Te Velde, Ralph A.
Te Velde, Zwaantina, Trustee
Ter Maaten, Case
Ter Maaten, Cleone
Ter Maaten, Steve
Terpstra, Carol
Terpstra, Theodore G.
Teune, Tony
Teunissen, Bernard
Teunissen, Jane
Thomas, Ethel M.
Thommen, Alice
Thommen, Fritz
Tillema, Allie
Tillema, Harold
Tillema, Klaas D.
Timmons, William R.
Tollerup, Barbara
Tollerup, Harold
Trapani, Louis A.
Trimlett, Arlene R.
Trimlett, George E.
Tristant, Pierre
Tuinhout, Ale
Tuinhout, Harry
Tuinhout, Hilda
Tuls, Elizabeth
Tuls, Jack S.
Tuls, Jake
Union Oil Company of California
United Dairyman's Co-op.
Urquhart, James G.
Usle, Cathryn
Usle, Faustino

LAW OFFICES
DONALD D. STARK
A PROFESSIONAL CORPORATION
SUITE 201
2061 BUSINESS CENTER DRIVE
IRVINE, CALIFORNIA 92715
(714) 752-8971

LAW OFFICES
DONALD D. STARK
A PROFESSIONAL CORPORATION
SUITE 201
2061 BUSINESS CENTER DRIVE
IRVINE, CALIFORNIA 92715
(714) 752-8971

V & Y Properties
Vaile, Beryl M.
Valley Hay Co.
Van Beek Dairy Inc.
Van Canneyt Dairy
Van Canneyt, Maurice
Van Canneyt, Wilmer
Van Dam, Bas
Van Dam, Isabelle
Van Dam, Nellie
Van Den Berg, Gertrude
Van Den Berg, Joyce
Van Den Berg, Marinus
Van Den Berg, Marvin
Van Der Linden, Ardith
Van Der Linden, John
Van Der Linden, Stanley
Van Der Veen, Kenneth
Van Diest, Anna T.
Van Diest, Cornelius
Van Diest, Ernest
Van Diest, Rena
Van Dyk, Bart
Van Dyk, Jeanette
Van Foeken, Martha
Van Foeken, William
Van Hofwegan, Steve
Van Hofwegen, Adrian A.
Van Hofwegen, Clara
Van Hofwegen, Jessie
Van Klaveren, A.
Van Klaveren, Arie
Van Klaveren, Wilhelmina
Van Klaveren, William
Van Leeuwen, Arie C.
Van Leeuwen, Arie C.
Van Leeuwen, Arlan
Van Leeuwen, Clara G.
Van Leeuwen, Cornelia L.
Van Leeuwen, Harriet
Van Leeuwen, Jack
Van Leeuwen, John
Van Leeuwen, Letie
Van Leeuwen, Margie
Van Leeuwen, Paul
Van Leeuwen, William A.
Van Ravenswaay, Donald
Van Ryn Dairy
Van Ryn, Dick
Van Surksum, Anthonetta
Van Surksum, John
Van Veen, John
Van Vliet, Effie
Van Vliet, Hendrika
Van Vliet, Hugo
Van Vliet, Klaas

LAW OFFICES
DONALD D. STARK
A PROFESSIONAL CORPORATION
SUITE 201
2061 BUSINESS CENTER DRIVE
IRVINE, CALIFORNIA 92715
(714) 752-8971

Vande Witte, George	Vander Laan, Katie
Vanden Berge, Gertie	Vander Laan, Martin Jr.
Vanden Berge, Gertie	Vander Laan, Tillie
Vanden Berge, Jack	Vander Leest, Anna
Vanden Berge, Jake	Vander Leest, Ann
Vanden Brink, Stanley	Vander Meer, Alice
Vander Dussen, Agnes	Vander Meer, Dick
Vander Dussen, Cor	Vander Poel, Hank
Vander Dussen, Cornelius	Vander Poel, Pete
Vander Dussen, Edward	Vander Pol, Irene
Vander Dussen, Geraldine Marie	Vander Pol, Margie
Vander Dussen, James	Vander Pol, Marines
Vander Dussen, John	Vander Pol, William P.
Vander Dussen, Nelvina	Vander Schaaf, Earl
Vander Dussen, Rene	Vander Schaaf, Elizabeth
Vander Dussen, Sybrand Jr.	Vander Schaaf, Henrietta
Vander Dussen, Sybrand Sr.	Vander Schaaf, John
Vander Dussen Trustees	Vander Schaaf, Ted
Vander Eyk, Case Jr.	Vander Stelt, Catherine
Vander Eyk, Case Sr.	Vander Stelt, Clarence
Vander Feer, Peter	Vander Tuig, Arlene
Vander Feer, Rieka	Vander Tuig, Sylvester
Vander Laan, Ann	Vander Veen, Joe A.
Vander Laan, Ben	Vandervlag, Robert
Vander Laan, Bill	Vander Zwan, Peter
Vander Laan, Corrie	Vanderford, Betty W.
Vander Laan, Henry	Vanderford, Claud R.
Vander Laan, James	Vanderham, Adrian

LAW OFFICES
DONALD D. STARK
A PROFESSIONAL CORPORATION
SUITE 201
2061 BUSINESS CENTER DRIVE
IRVINE, CALIFORNIA 92715
(714) 752-8971

Vanderham, Cornelius	Vestal, J. Howard
Vanderham, Cornelius P.	Visser, Gerrit
Vanderham, Cory	Visser, Grace
Vanderham, E. Jane	Visser, Henry
Vanderham, Marian	Visser, Jess
Vanderham, Martin	Visser, Louie
Vanderham, Pete C.	Visser, Neil
Vanderham, Wilma	Visser, Sam
Vasquez, Eleanor	Visser, Stanley
Veenendaal, Evert	Visser, Tony D.
Veenendaal, John H.	Visser, Walter G.
Veiga, Dominick Sr.	Von Der Ahe, Fredric T.
Verbree, Jack	Von Euw, George
Verbree, Tillie	Von Euw, Marjorie
Verger, Bert	Von Lusk, a limited partnership
Verger, Betty	Voortman, Anna Marie
Verhoeven, Leona	Voortman, Edward
Verhoeven, Martin	Voortman, Edwin J.
Verhoeven, Wesley	Voortman, Gertrude Dena
Vermeer, Dick	Wagner, Richard H.
Vermeer, Jantina	Walker, Carole R.
Vernola Ranch	Walker, Donald E.
Vernola, Anthonietta	Walker, Wallace W.
Vernola, Anthony	Wardle, Donald M.
Vernola, Frank	Warner, Dillon B.
Vernola, Mary Ann	Warner, Minnie
Vernola, Pat F.	Wassenaar, Peter W.
Vestal, Frances Lorraine	Waters, Michael

Weeda, Adriana
Weeda, Daniel
Weeks, O. L.
Weeks, Verona E.
Weidman, Maurice
Weidman, Virginia
Weiland, Adaline I.
Weiland, Peter J.
Wesselink, Jules
West, Katharine R.
West, Russel
West, Sharon Ann
Western Horse Property
Westra, Alice
Westra, Henry
Westra, Hilda
Westra, Jake J.
Weststeyn, Freida
Weststeyn, Pete
Whitehurst, Louis G.
Whitehurst, Pearl L.
Whitmore, David L.
Whitmore, Mary A.
Whitney, Adolph M.
Wiersema, Harm
Wiersema, Harry
Wiersma, Ellen H.
Wiersma, Gladys J.
Wiersma, Jake
Wiersma, Otto
Wiersma, Pete
Winchell, Verne H., Trustee
Wind, Frank
Wind, Fred
Wind, Hilda
Wind, Johanna
Woo, Frank
Woo, Sem Gee
Wybenga, Clarence
Wybenga, Gus
Wybenga, Gus K.
Wybenga, Sylvia
Wynja, Andy
Wynja, Iona F.
Yellis, Mildred
Yellis, Thomas E.
Ykema-Harmsen Dairy
Ykema, Floris
Ykema, Harriet
Yokley, Betty Jo
Yokley, Darrell A.
Zak, Zan
Zivelonghi, George
Zivelonghi, Margaret
Zwaagstra, Jake
Zwaagstra, Jessie M.
Zwart, Case

LAW OFFICES
DONALD D. STARK
A PROFESSIONAL CORPORATION
SUITE 201
2061 BUSINESS CENTER DRIVE
IRVINE, CALIFORNIA 92715
(714) 752-8971

LAW OFFICES
DONALD D. STARK
A PROFESSIONAL CORPORATION
SUITE 201
2061 BUSINESS CENTER DRIVE
IRVINE, CALIFORNIA 92715
(714) 752-8971

NON-PRODUCER WATER DISTRICTS

Chino Basin Municipal Water District

Chino Basin Water Conservation District

Pomona Valley Municipal Water District

Western Municipal Water District of Riverside County

LAW OFFICES
DONALD D. STARK
A PROFESSIONAL CORPORATION
SUITE 201
2061 BUSINESS CENTER DRIVE
IRVINE, CALIFORNIA 92715
(714) 752-8971

DEFAULTING OVERLYING AGRICULTURAL PRODUCERS

Cheryl L. Bain	Roy W. Lantis
Warren Bain	Sharon I. Lantis
John M. Barcelona	Frank Lorenz
Letty Bassler	Dagney H. MacDonald
John Brazil	Frank E. Martin
John S. Briano	Ruth C. Martin
Lupe Briano	Connie S. Mello
Paul A. Briano	Naldiro J. Mello
Tillie Briano	Felice Miller
Arnie B. Carlson	Ted Miller
John Henry Fikse	Masao Nerio
Phyllis S. Fikse	Tom K. Nerio
Lewellyn Flory	Toyo Nerio
Mary I. Flory	Yuriko Nerio
L. H. Glazer	Harold L. Rees
Dorothy Goodman	Alden G. Rose
Sidney D. Goodman	Claude Rouleau, Jr.
Frank Grossi	Patricia M. Rouleau
Harada Brothers	Schultz Enterprises
Ellen Hettinga	Albert Shaw
Hein Hettinga	Lila Shaw
Dick Hofstra, Jr.	Cathy M. Stewart
Benjamin M. Hughey	Marvin C. Stewart
Frieda L. Hughey	Betty Ann Stone
Guillaume Indart	John B. Stone
Ellwood B. Johnston, Trustee	Vantoll Cattle Co., Inc.
Perry Kruckenberg, Jr.	Catherene Verburg

Martin Verburg

Donna Vincent

Larry Vincent

Cliff Wolfe & Associates

Ada M. Woll

Zarubica Co.

LAW OFFICES
DONALD D. STARK
A PROFESSIONAL CORPORATION
SUITE 201
2061 BUSINESS CENTER DRIVE
IRVINE, CALIFORNIA 92715
(714) 752-8971

EXHIBIT "D"

OVERLYING NON-AGRICULTURAL RIGHTS

Party	Total Overlying Non-Agricultural Rights (Acre Feet)	Share of Safe Yield (Acre Feet)
Ameron Steel Producers, Inc.	125	97.858
County of San Bernardino	171	133.870
Conrock Company	406	317.844
Kaiser Steel Corporation	3,743	2,930.274
Red Star Fertilizer	20	15.657
Southern California Edison Co.	1,255	982.499
Space Center, Mira Loma	133	104.121
Southern Service Co., dba Blue Seal Linen	24	18.789
Sunkist, Orange Products Division	2,393	1,873.402
Carlsberg Mobile Home Properties, Ltd. '73	593	464.240
Union Carbide Corporation	546	427.446
Quaker Chemical Co.	0	0
Totals	9,409	7,366.000

A PROFESSIONAL CORPORATION
SUITE 201
2061 BUSINESS CENTER DRIVE
IRVINE, CALIFORNIA 92715
(714) 752-8971

EXHIBIT "E"
APPROPRIATIVE RIGHTS

Party	Appropriative Right (Acre Feet)	Share of Initial Operating Safe Yield (Acre Feet)	Share of Operating Safe Yield (Percent)
City of Chino	5,271.7	3,670.067	6.693
City of Norco	289.5	201.545	0.368
City of Ontario	16,337.4	11,373.816	20.742
City of Pomona	16,110.5	11,215.852	20.454
City of Upland	4,097.2	2,852.401	5.202
Cucamonga County Water District	4,431.0	3,084.786	5.626
Jurupa Community Services District	1,104.1	768.655	1.402
Monte Vista County Water District	5,958.7	4,148.344	7.565
West San Bernardino County Water District	925.5	644.317	1.175
Etiwanda Water Company	768.0	534.668	0.975
Felspar Gardens Mutual Water Company	68.3	47.549	0.087
Fontana Union Water Co.	9,188.3	6,396.736	11.666
Marygold Mutual Water Co.	941.3	655.317	1.195
Mira Loma Water Co.	1,116.0	776.940	1.417
Monta Vista Irr. Co.	972.1	676.759	1.234
Mutual Water Company of Glen Avon Heights	672.2	467.974	0.853
Park Water Company	236.1	164.369	0.300
Pomona Valley Water Co.	3,106.3	2,162.553	3.944
San Antonio Water Co.	2,164.5	1,506.888	2.748
Santa Ana River Water Company	1,869.3	1,301.374	2.373
Southern California Water Company	1,774.5	1,235.376	2.253
West End Consolidated Water Company	1,361.3	947.714	1.728
TOTAL	78,763.8	54,834.000	100.000

LAW OFFICES
DONALD D. STARK
A PROFESSIONAL CORPORATION
SUITE 201
2061 BUSINESS CENTER DRIVE
IRVINE, CALIFORNIA 92715
(714) 752-8971

EXHIBIT "F"
OVERLYING (AGRICULTURAL) POOL
POOLING PLAN

1. Membership in Pool. The State of California and all producers listed in Exhibit "C" shall be the initial members of this pool, which shall include all producers of water for overlying uses other than industrial or commercial purposes.

2. Pool Meetings. The members of the pool shall meet annually, in person or by proxy, at a place and time to be designated by Watermaster for purposes of electing members of the Pool Committee and conducting any other business of the pool. Special meetings of the membership of the pool may be called and held as provided in the rules of the pool.

3. Voting. All voting at meetings of pool members shall be on the basis of one vote for each 100 acre feet or any portion thereof of production from Chino Basin during the preceding year, as shown by the records of Watermaster.

4. Pool Committee. The Pool Committee for this pool shall consist of not less than nine (9) representatives selected at large by members of the pool. The exact number of members of the Pool Committee in any year shall be as determined by majority vote of the voting power of members of the pool in attendance at the annual pool meeting. Each member of the Pool Committee shall have one vote and shall serve for a two-year term. The members first elected shall classify themselves by lot so that approximately one-half serve an initial one-year term. Vacancies during any term shall be filled by a majority of the remaining members of the Pool Committee.

5. Advisory Committee Representatives. The number of

representatives of the Pool Committee on the Advisory Committee shall be as provided in the rules of the pool from time to time but not exceeding ten (10). The voting power of the pool on the Advisory Committee shall be apportioned and exercised as determined from time to time by the Pool Committee.

6. Replenishment Obligation. The pool shall provide funds for replenishment of any production by persons other than members of the Overlying (Non-agricultural) Pool or Appropriator Pool, in excess of the pool's share of Safe Yield. During the first five (5) years of operations of the Physical Solution, reasonable efforts shall be made by the Pool Committee to equalize annual assessments.

7. Assessments. All assessments in this pool (whether for replenishment water cost or for pool administration or the allocated share of Watermaster administration) shall be in an amount uniformly applicable to all production in the pool during the preceding year or calendar quarter. Provided, however, that the Agricultural Pool Committee, may recommend to the Court modification of the method of assessing pool members, inter se, if the same is necessary to attain legitimate basin management objectives, including water conservation and avoidance of undesirable socio-economic consequences. Any such modification shall be initiated and ratified by one of the following methods:

(a) Excess Production. In the event total pool production exceeds 100,000 acre feet in any year, the Pool Committee shall call and hold a meeting, after notice to all pool members, to consider remedial modification of the assessment formula.

A PROFESSIONAL CORPORATION
SUITE 201
2061 BUSINESS CENTER DRIVE
IRVINE, CALIFORNIA 92715
(714) 752-8971

(b) Producer Petition. At any time after the fifth full year of operation under the Physical Solution, a petition by ten percent (10%) of the voting power or membership of the Pool shall compel the holding of a noticed meeting to consider revision of said formula of assessment for replenishment water.

In either event, a majority action of the voting power in attendance at such pool members' meeting shall be binding on the Pool Committee.

8. Rules. The Pool Committee shall adopt rules for conducting meetings and affairs of the committee and for administering its program and in amplification of the provisions, but not inconsistent with, this pooling plan.

LAW OFFICES
DONALD D. STARK
A PROFESSIONAL CORPORATION
SUITE 201
2061 BUSINESS CENTER DRIVE
IRVINE, CALIFORNIA 92715
(714) 752-8971

LAW OFFICES
DONALD D. STARK
A PROFESSIONAL CORPORATION
SUITE 201
2061 BUSINESS CENTER DRIVE
IRVINE, CALIFORNIA 92715
(714) 752-8971

EXHIBIT "G"
OVERLYING (NON-AGRICULTURAL) POOL
POOLING PLAN

1. Membership in Pool. The initial members of the pool, together with the decreed share of the Safe Yield of each, are listed in Exhibit "D". Said pool includes producers of water for overlying industrial or commercial (non-agricultural) purposes, or such producers within the Pool who may hereafter take water pursuant to Paragraph 8 hereof.

2. Pool Committee. The Pool Committee for this pool shall consist of one representative designated by each member of the pool. Voting on the committee shall be on the basis of one vote for each member, unless a volume vote is demanded, in which case votes shall be allocated as follows:

> The volume voting power on the Pool Committee shall be 1,484 votes. Of these, 742 votes shall be allocated on the basis of one vote for each ten (10) acre feet or fraction thereof of decreed shares in Safe Yield. (See Exhibit "D".) The remaining 742 votes shall be allocated proportionally on the basis of assessments paid to Watermaster during the preceding year.*

3. Advisory Committee Representatives. At least three (3) members of the Pool Committee shall be designated by said committee to serve on the Advisory Committee. The exact number of such representatives at any time shall be as determined by the Pool Committee. The voting power of the pool shall be exercised in the

---

*Or production assessments paid under Water Code Section 72140 et seq., as to years prior to the second year of operation under the Physical Solution hereunder.

Advisory Committee as a unit, based upon the vote of a majority of said representatives.

4. Replenishment Obligation. The pool shall provide funds for replenishment of any production in excess of the pool's share of Safe Yield in the preceding year.

5. Assessment. Each member of this pool shall pay an assessment equal to the cost of replenishment water times the number of acre feet of production by such producer during the preceding year in excess of (a) his decreed share of the Safe Yield, plus (b) any carry-over credit under Paragraph 7 hereof. In addition, the cost of the allocated share of Watermaster administration expense shall be recovered on an equal assessment against each acre foot of production in the pool during such preceding fiscal year or calendar quarter; and in the case of Pool members who take substitute ground water as set forth in Paragraph 8 hereof, such producer shall be liable for its share of administration assessment, as if the water so taken were produced, up to the limit of its decreed share of Safe Yield.

6. Assignment. Rights herein decreed are appurtenant to the land and are only assignable with the land for overlying use thereon; provided, however, that any appropriator who may, directly or indirectly, undertake to provide water service to such overlying lands may, by an appropriate agency agreement on a form approved by Watermaster, exercise said overlying right to the extent, but only to the extent necessary to provide water service to said overlying lands.

7. Carry-over. Any member of the pool who produces less than its assigned water share of Safe Yield may carry such unexercised

LAW OFFICES
DONALD D. STARK
A PROFESSIONAL CORPORATION
SUITE 201
2061 BUSINESS CENTER DRIVE
IRVINE, CALIFORNIA 92715
(714) 752-8971

right forward for exercise in subsequent years. The first water produced during any such subsequent year shall be deemed to be an exercise of such carry-over right. In the event the aggregate carry-over by any pool member exceeds its share of Safe Yield, such member shall, as a condition of preserving such surplus carry-over, execute a storage agreement with Watermaster.

8. Substitute Supplies. To the extent that any Pool member, at the request of Watermaster and with the consent of the Advisory Committee, takes substitute surface water in lieu of producing ground water otherwise subject to production as an allocated share of Safe Yield, said party shall nonetheless remain a member of this Pool.

9. Rules. The Pool Committee shall adopt rules for administering its program and in amplification of the provisions, but not inconsistent with, this pooling plan.

LAW OFFICES
DONALD D. STARK
A PROFESSIONAL CORPORATION
SUITE 201
2061 BUSINESS CENTER DRIVE
IRVINE, CALIFORNIA 92715
(714) 752-8971

LAW OFFICES
DONALD D. STARK
A PROFESSIONAL CORPORATION
SUITE 201
2061 BUSINESS CENTER DRIVE
IRVINE, CALIFORNIA 92715
(714) 752-8971

EXHIBIT "H"
APPROPRIATIVE POOL
POOLING PLAN

1. Qualification for Pool. Any city, district or other public entity and public utility -- either regulated under Public Utilities Commission jurisdiction, or exempt therefrom as a non-profit mutual water company (other than those assigned to the Overlying [Agricultural] Pool) -- shall be a member of this pool. All initial members of the pool are listed in Exhibit "E", together with their respective appropriative rights and acre foot allocation and percentage shares of the initial and subsequent Operating Safe Yield.

2. Pool Committee. The Pool Committee shall consist of one (1) representative appointed by each member of the Pool.

3. Voting. The total voting power on the Pool Committee shall be 1,000 votes. Of these, 500 votes shall be allocated in proportion to decreed percentage shares in Operating Safe Yield. The remaining 500 votes shall be allocated proportionally on the basis of assessments paid to Watermaster during the preceding year.* Routine business of the Pool Committee may be conducted on the basis of one vote per member, but upon demand of any member a weighted vote shall be taken. Affirmative action of the Committee shall require a majority of the voting power of members in attendance, provided that it includes concurrence by at least one-third of its total members.

4. Advisory Committee Representatives. Ten (10) members of

*Or production assessments paid under Water Code Section 72140 et seq., as to years prior to the second year of operation under the Physical Solution hereunder.

the Pool Committee shall be designated to represent this pool on the Advisory Committee. Each major appropriator, i.e., the owner of an adjudicated appropriative right in excess of 3,000 acre feet, shall be entitled to one representative. The remaining members representing the Appropriative Pool on the Advisory Committee shall be elected at large by the remaining members of the pool. The voting power of the Appropriative Pool on the Advisory Committee shall be apportioned between the major appropriator representatives in proportion to their respective voting power in the Pool Committee. The remaining two representatives shall exercise equally the voting power proportional to the Pool Committee voting power of all remaining appropriators; provided, however, that if any representative fails to attend an Advisory Committee meeting, the voting power of that representative shall be allocated among the representatives of the Appropriator Pool in attendance in the same proportion as their own respective voting powers.

5. Replenishment Obligation. The pool shall provide funds for purchase of replenishment water to replace any production by the pool in excess of Operating Safe Yield during the preceding year.

6. Administrative Assessment. Costs of administration of this pool and its share of general Watermaster expense shall be recovered by a uniform assessment applicable to all production during the preceding year.

7. Replenishment Assessment. The cost of replenishment water required to replace production from Chino Basin in excess of Operating Safe Yield in the preceding year shall be allocated and recovered as follows:

LAW OFFICES
DONALD D. STARK
A PROFESSIONAL CORPORATION
SUITE 201
2061 BUSINESS CENTER DRIVE
IRVINE, CALIFORNIA 92715
(714) 752-8971

(a) For production, other than for increased export, within CBMWD or WMWD:

(1) Gross Assessment. 15% of such replenishment water costs shall be recovered by a uniform assessment against all production of each appropriator producing in said area during the preceding year.

(2) Net Assessment. The remaining 85% of said costs shall be recovered by a uniform assessment on each acre foot of production from said area by each such appropriator in excess of his allocated share of Operating Safe Yield during said preceding year.

(b) For production which is exported for use outside Chino Basin in excess of maximum export in any year through 1976, such increased export production shall be assessed against the exporting appropriator in an amount sufficient to purchase replenishment water from CBMWD or WMWD in the amount of such excess.

(c) For production within SBVMWD or PVMWD:

By an assessment on all production in excess of an appropriator's share of Operating Safe Yield in an amount sufficient to purchase replenishment water through SBVMWD or MWD in the amount of such excess.

8. Socio-Economic Impact Review. The parties have conducted certain preliminary socio-economic impact studies. Further and more detailed socio-economic impact studies of the assessment formula and its possible modification shall be undertaken for the Appropriator Pool by Watermaster no later than ten (10) years from the effective date of this Physical Solution, or whenever total

LAW OFFICES
DONALD D. STARK
A PROFESSIONAL CORPORATION
SUITE 201
2061 BUSINESS CENTER DRIVE
IRVINE, CALIFORNIA 92715
(714) 752-8971

production by this pool has increased by 30% or more over the decreed appropriative rights, whichever is first.

9. Facilities Equity Assessment. Watermaster may, upon recommendation of the Pool Committee, institute proceedings for levy and collection of a Facilities Equity Assessment for the purposes and in accordance with the procedures which follow:

(a) Implementing Circumstances. There exist several sources of supplemental water available to Chino Basin, each of which has a differential cost and quantity available. The optimum management of the entire Chino Basin water resource favors the maximum use of the lowest cost supplemental water to balance the supplies of the Basin, in accordance with the Physical Solution. The varying sources of supplemental water include importations from MWD and SBVMWD, importation of surface and ground water supplies from other basins in the immediate vicinity of Chino Basin, and utilization of reclaimed water. In order to fully utilize any of such alternate sources of supply, it will be essential for particular appropriators having access to one or more of such supplies to have invested, or in the future to invest, directly or indirectly, substantial funds in facilities to obtain and deliver such water to an appropriate point of use. To the extent that the use of less expensive alternate sources of supplemental water can be maximized by the inducement of a Facilities Equity Assessment, as herein provided, it is to the long-term benefit of the entire basin that such assessment be authorized and levied by Watermaster.

(b) Study and Report. At the request of the Pool

LAW OFFICES
DONALD D. STARK
A PROFESSIONAL CORPORATION
SUITE 201
2061 BUSINESS CENTER DRIVE
IRVINE, CALIFORNIA 92715
(714) 752-8971

LAW OFFICES
DONALD D. STARK
A PROFESSIONAL CORPORATION
SUITE 201
2061 BUSINESS CENTER DRIVE
IRVINE, CALIFORNIA 92715
(714) 752-8971

Committee, Watermaster shall undertake a survey study of the utilization of alternate supplemental supplies by members of the Appropriative Pool which would not otherwise be utilized and shall prepare a report setting forth the amount of such alternative supplies being currently utilized, the amount of such supplies which could be generated by activity within the pool, and the level of cost required to increase such uses and to optimize the total supplies available to the basin. Said report shall contain an analysis and recommendation for the levy of a necessary Facilities Equity Assessment to accomplish said purpose.

(c) Hearing. If the said report by Watermaster contains a recommendation for imposition of a Facilities Equity Assessment, and the Pool Committee so requests, Watermaster shall notice and hold a hearing not less than 60 days after distribution of a copy of said report to each member of the pool, together with a notice of the hearing date. At such hearing, evidence shall be taken with regard to the necessity and propriety of the levy of a Facilities Equity Assessment and full findings and decision shall be issued by Watermaster.

(d) Operation of Assessment. If Watermaster determines that it is appropriate that a Facilities Equity Assessment be levied in a particular year, the amount of additional supplemental supplies which should be generated by such assessment shall be estimated. The cost of obtaining such supplies, taking into consideration the investment in necessary facilities shall then be determined and spread equitably among the producers within the pool in a manner so that those

LAW OFFICES
DONALD D. STARK
A PROFESSIONAL CORPORATION
SUITE 201
2061 BUSINESS CENTER DRIVE
IRVINE, CALIFORNIA 92715
(714) 752-8971

producers not providing such additional lower cost supplemental water, and to whom a financial benefit will result, may bear a proportionate share of said costs, not exceeding said benefit; provided that any producer furnishing such supplemental water shall not thereby have its average cost of water in such year reduced below such producer's average cost of pumping from the Basin. In so doing, Watermaster shall establish a percentage of the total production by each party which may be produced without imposition of a Facilities Equity Assessment. Any member of the pool producing more water than said percentage shall pay such Facilities Equity Assessment on any such excess production. Watermaster is authorized to transmit and pay the proceeds of such Facilities Equity Assessment to those producers who take less than their share of Basin water by reason of furnishing a higher percentage of their requirements through use of supplemental water.

10. Unallocated Safe Yield Water. To the extent that, in any five years, any portion of the share of Safe Yield allocated to the Overlying (Agricultural) Pool is not produced, such water shall be available for reallocation to members of the Appropriative Pool, as follows:

(a) Priorities. Such allocation shall be made in the following sequence:

(1) to supplement, in the particular year, water available from Operating Safe Yield to compensate for any reduction in the Safe Yield by reason of recalculation thereof after the tenth year of operation hereunder.

(2) pursuant to conversion claims as defined in Subparagraph (b) hereof.

(3) as a supplement to Operating Safe Yield, without regard to reductions in Safe Yield.

(b) Conversion Claims. The following procedures may be utilized by any appropriator:

(1) Record of Land Use Conversion. Any appropriator who undertakes, directly or indirectly, during any year, to permanently provide water service to lands which during the immediate preceding five (5) consecutive years was devoted to irrigated agriculture may report such change in land use or water service to Watermaster. Watermaster shall thereupon verify such change in water service and shall maintain a record and account for each appropriator of the total acreage involved and the average annual water use during said five-year period.

(2) Establishment of Allocation Percentage. In any year in which unallocated Safe Yield water from the Overlying (Agricultural) Pool is available for such conversion claims, Watermaster shall establish allocable percentages for each appropriator based upon the total of such converted acreage recorded to each such appropriator's account.

(3) Allocation and Notice. Watermaster shall thereafter apply the allocated percentage to the total unallocated Safe Yield water available for special allocation to derive the amount thereof allocable to

LAW OFFICES
DONALD D. STARK
A PROFESSIONAL CORPORATION
SUITE 201
2061 BUSINESS CENTER DRIVE
IRVINE, CALIFORNIA 92715
(714) 752-8971

LAW OFFICES
DONALD D. STARK
A PROFESSIONAL CORPORATION
SUITE 201
2061 BUSINESS CENTER DRIVE
IRVINE, CALIFORNIA 92715
(714) 752-8971

each appropriator; provided that in no event shall the allocation to any appropriator as a result of such conversion claim exceed 50% of the average annual amount of water actually applied to the areas converted by such appropriator prior to such conversion. Any excess water by reason of such limitation on any appropriator's right shall be added to Operating Safe Yield. Notice of such special allocation shall be given to each appropriator and shall be treated for purposes of this Physical Solution as an addition to such appropriator's share of the Operating Safe Yield for the particular year only.

(4) Administrative Costs. Any costs of Watermaster attributable to administration of such special allocations and conversion claims shall be assessed against appropriators participating in such reporting.

11. In Lieu Procedures. There are, or may develop, certain areas within Chino Basin where good management practices dictate that recharge of the basin be accomplished, to the extent practical, by taking surface supplies of supplemental water in lieu of ground water otherwise subject to production as an allocated share of Operating Safe Yield.

(a) Method of Operation. Any appropriator producing water within such designated in lieu area who is willing to abstain for any reason from producing any portion of such producer's share of Operating Safe Yield in any year may offer such unpumped water to Watermaster. In such event, Watermaster shall purchase said water in place, in lieu of spreading replenishment water, which is otherwise required to

make up for over production. The purchase price for in lieu water shall be the lesser of:

(1) Watermaster's current cost of replenishment water, whether or not replenishment water is currently then obtainable, plus the cost of spreading; or

(2) The cost of supplemental surface supplies to the appropriator, less

a. said appropriator's average cost of ground water production, and

b. the applicable production assessment were the water produced.

Where supplemental surface supplies consist of MWD or SBVMWD supplies, the cost of treated, filtered State water from such source shall be deemed the cost of supplemental surface supplies to the appropriator for purposes of such calculation.

In any given year in which payments may be made pursuant to a Facilities Equity Assessment, as to any given quantity of water the party will be entitled to payment under this section or pursuant to the Facilities Equity Assessment, as the party elects, but not under both.

(b) Designation of In Lieu Areas. The first in lieu area is designated as the "In Lieu Area No. 1" and consists of an area wherein nitrate levels in the ground water generally exceed 45 mg/l, and is shown on Exhibit "J" hereto. Other in lieu areas may be designated by subsequent order of Watermaster upon recommendation or approval by Advisory Committee. Said in lieu areas may be enlarged, reduced or

LAW OFFICES
DONALD D. STARK
A PROFESSIONAL CORPORATION
SUITE 201
2061 BUSINESS CENTER DRIVE
IRVINE, CALIFORNIA 92715
(714) 752-8971

LAW OFFICES
DONALD D. STARK
A PROFESSIONAL CORPORATION
SUITE 201
2061 BUSINESS CENTER DRIVE
IRVINE, CALIFORNIA 92715
(714) 752-8971

eliminated by subsequent orders; provided, however, that designation of In Lieu Areas shall be for a minimum fixed term sufficient to justify necessary capital investment. In Lieu Area No. 1 may be enlarged, reduced or eliminated in the same manner, except that any reduction of its original size or elimination thereof shall require the prior order of Court.

12. Carry-over. Any appropriator who produces less than his assigned share of Operating Safe Yield may carry such unexercised right forward for exercise in subsequent years. The first water produced during any such subsequent year shall be deemed to be an exercise of such carry-over right. In the event the aggregate carry-over by any appropriator exceeds its share of Operating Safe Yield, such appropriator shall, as a condition of preserving such surplus carry-over, execute a storage agreement with Watermaster. Such appropriator shall have the option to pay the gross assessment applicable to such carry-over in the year in which it accrued.

13. Assignment, Transfer and Lease. Appropriative rights, and corresponding shares of Operating Safe Yield, may be assigned or may be leased or licensed to another appropriator for exercise in a given year. Any transfer, lease or license shall be ineffective until written notice thereof is furnished to and approved as to form by Watermaster, in compliance with applicable Watermaster rules. Watermaster shall not approve transfer, lease or license of a right for exercise in an area or under conditions where such production would be contrary to sound basin management or detrimental to the rights or operations of other producers.

14. Rules. The Pool Committee shall adopt rules for

administering its program and in amplification of the provisions, but not inconsistent with, this pooling plan.

LAW OFFICES
DONALD D. STARK
A PROFESSIONAL CORPORATION
SUITE 201
2061 BUSINESS CENTER DRIVE
IRVINE, CALIFORNIA 92715
(714) 752-8971

LAW OFFICES
DONALD D. STARK
A PROFESSIONAL CORPORATION
SUITE 201
2061 BUSINESS CENTER DRIVE
IRVINE, CALIFORNIA 92715
(714) 752-8971

EXHIBIT "I"

ENGINEERING APPENDIX

1. Basin Management Parameters. In the process of implementing the physical solution for Chino Basin, Watermaster shall consider the following parameters:

(a) Pumping Patterns. Chino Basin is a common supply for all persons and agencies utilizing its waters. It is an objective in management of the Basin's waters that no producer be deprived of access to said waters by reason of unreasonable pumping patterns, nor by regional or localized recharge of replenishment water, insofar as such result may be practically avoided.

(b) Water Quality. Maintenance and improvement of water quality is a prime consideration and function of management decisions by Watermaster.

(c) Economic Considerations. Financial feasibility, ecnomic impact and the cost and optimum utilization of the Basin's resources and the physical facilities of the parties are objectives and concerns equal in importance to water quantity and quality parameters.

2. Operating Safe Yield. Operating Safe Yield in any year shall consist of the Appropriative Pool's share of Safe Yield of the Basin, plus any controlled overdraft of the Basin which Watermaster may authorize. In adopting the Operating Safe Yield for any year, Watermaster shall be limited as follows:

(a) Accumulated Overdraft. During the operation of this Judgment and Physical Solution, the overdraft accumulated from and after the effective date of the Physical

Solution and resulting from an excess of Operating Safe Yield over Safe Yield shall not exceed 200,000 acre feet.

(b) Quantitative Limits. In no event shall Operating Safe Yield in any year be less than the Appropriative Pool's share of Safe Yield, nor shall it exceed such share of Safe Yield by more than 10,000 acre feet. The initial Operating Safe Yield is hereby set at 54,834 acre feet per year. Operating Safe Yield shall not be changed upon less than five (5) years' notice by Watermaster.

Nothing contained in this paragraph shall be deemed to authorize, directly or indirectly, any modification of the allocation of shares in Safe Yield to the overlying pools, as set forth in Paragraph 44 of the Judgment.

3. Ground Water Storage Agreements. Any agreements authorized by Watermaster for storage of supplemental water in the available ground water storage capacity of Chino Basin shall include, but not be limited to:

(a) The quantities and term of the storage right.

(b) A statement of the priority or relation of said right, as against overlying or Safe Yield uses, and other storage rights.

(c) The procedure for establishing delivery rates, schedules and procedures which may include

[1] spreading or injection, or

[2] in lieu deliveries of supplemental water for direct use.

(d) The procedures for calculation of losses and annual accounting for water in storage by Watermaster.

LAW OFFICES
DONALD D. STARK
A PROFESSIONAL CORPORATION
SUITE 201
2061 BUSINESS CENTER DRIVE
IRVINE, CALIFORNIA 92715
(714) 752-8971

(e) The procedures for establishment and administration of withdrawal schedules, locations and methods.

LAW OFFICES
DONALD D. STARK
A PROFESSIONAL CORPORATION
SUITE 201
2061 BUSINESS CENTER DRIVE
IRVINE, CALIFORNIA 92715
(714) 752-8971

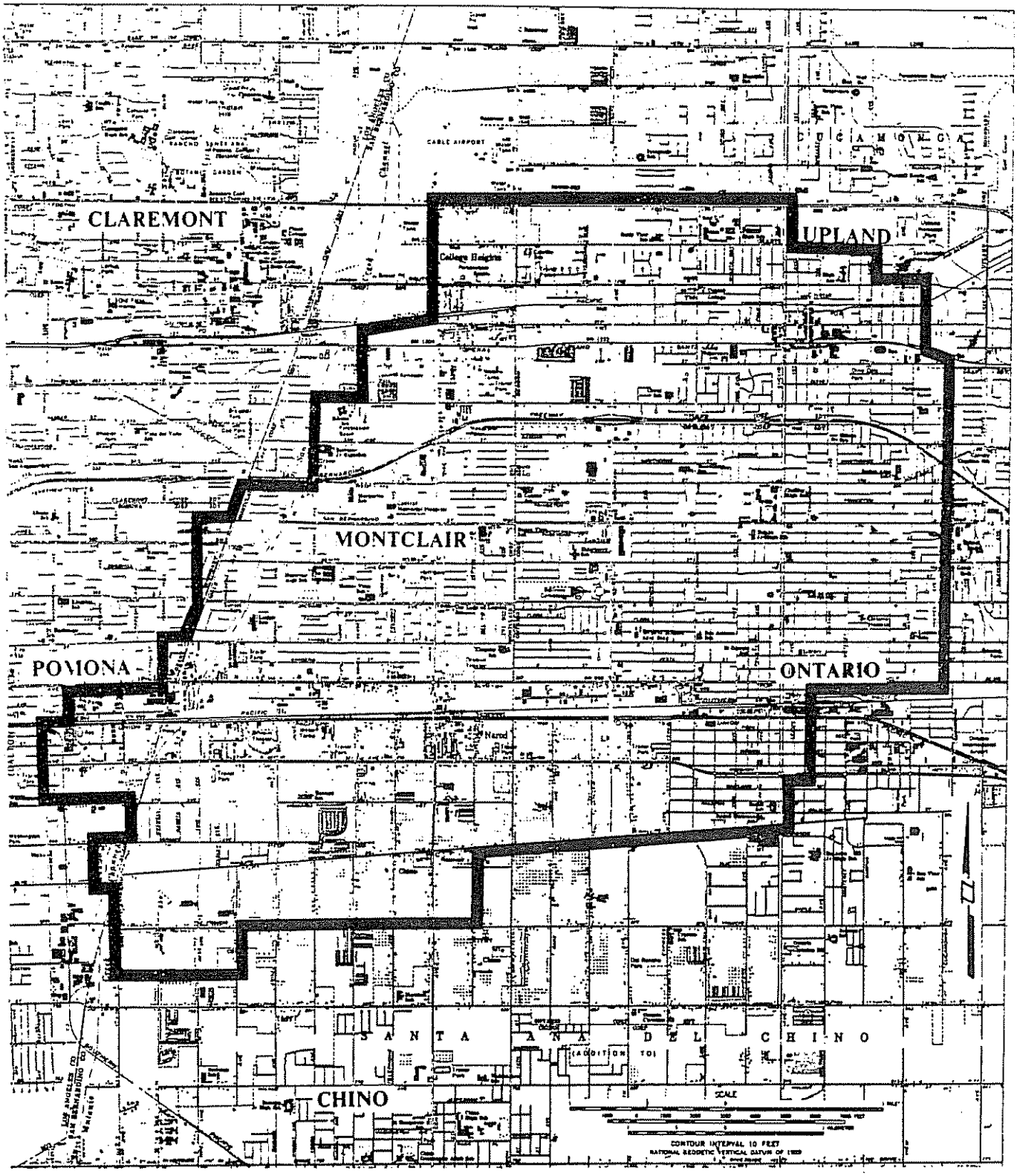

CHINO BASIN

IN LIEU AREA NO. 1

EXHIBIT "J"

LEGAL DESCRIPTION

OF CHINO BASIN

Preamble

All of the townships and ranges referred to in the following legal description are the San Bernardino Base and Meridian. Certain designated sections are implied as the System of Government Surveys may be extended where not established. Said sections are identified as follows:

Section 20, T1N, R8W is extended across Rancho Cucamonga;

Section 36, T1N, R8W is extended across the City of Upland;

Sections 2, 3, and 4, T1S, R7W are extended across Rancho Cucamonga;

Section 10, T1S, R8W is extended across the City of Claremont;

Sections 19, 20, 21, 30, 31 and 32, T1S, R8W are extended across the City of Pomona;

Sections 4, 5, and 28, T2S, R8W are extended across Rancho Santa Ana Del Chino;

Sections 15 and 16, T3S, R7W are extended across Rancho La Sierra; and

Sections 17 and 20, T3S, R7W are extended across Rancho El Rincon.

Description

Chino Basin is included within portions of the Counties of San Bernardino, Riverside and Los Angeles, State of California, bounded by a continuous line described as follows:

BEGINNING at the Southwest corner of Lot 241 as shown on Map of Ontario Colony Lands, recorded in Map Book 11, page 6, Office of the County Recorder of San Bernardino County, said corner being the Point of Beginning;

1. Thence Southeasterly to the Southeast corner

of Lot 419 of said Ontario Colony Lands;

2. Thence Southeasterly to a point 1300 feet North of the South line and 1300 feet East of the West line of Section 4, T1S, R7W;

3. Thence Easterly to a point on the East line of Section 4, 1800 feet North of the Southeast corner of said Section 4;

4. Thence Easterly to the Southeast corner of the Southwest quarter of the Northeast quarter of Section 3, T1S, R7W;

5. Thence Northeasterly to a point on the North line of Section 2, T1S, R7W, 1400 feet East of the West line of said Section 2;

6. Thence Northeasterly to the Southwest corner of Section 18, T1N, R6W;

7. Thence Northerly to the Northwest corner of said Section 18;

8. Thence Easterly to the Northeast corner of said Section 18;

9. Thence Northerly to the Northwest corner of the Southwest quarter of Section 8, T1N, R6W;

10. Thence Easterly to the Northeast corner of said Southwest quarter of said Section 8;

11. Thence Southerly to the Southeast corner of said Southwest quarter of said Section 8;

12. Thence Easterly to the Northeast corner of Section 17, T1N, R6W;

13. Thence Easterly to the Northeast corner of Section 16, T1N, R6W;

14. Thence Southeasterly to the Northwest corner of the Southeast quarter of Section 15, T1N, R6W;

15. Thence Easterly to the Northeast corner of said Southeast quarter of said Section 15;

16. Thence Southeasterly to the Northwest corner of the Northeast quarter of Section 23, T1N, R6W;

17. Thence Southeasterly to the Northwest corner

of Section 25, T1N, R6W;

18. Thence Southeasterly to the Northwest corner of the Northeast quarter of Section 31, T1N, R5W;

19. Thence Southeasterly to the Northeast corner of the Northwest quarter of Section 5, T1S, R5W;

20. Thence Southeasterly to the Southeast corner of Section 4, T1S, R5W;

21. Thence Southeasterly to the Southeast corner of the Southwest quarter of Section 11, T1S, R5W;

22. Thence Southwesterly to the Southwest corner of Section 14, T1S, R5W;

23. Thence Southwest to the Southwest corner of Section 22, T1S, R5W;

24. Thence Southwesterly to the Southwest corner of the Northeast quarter of Section 6, T2S, R5W;

25. Thence Southeasterly to the Northeast corner of Section 18 T2S, R5W;

26. Thence Southwesterly to the Southwest corner of the Southeast quarter of Section 13, T2S, R6W;

27. Thence Southwesterly to the Southwest corner of the Northeast quarter of Section 26, T2S, R6W;

28. Thence Westerly to the Southwest corner of the Northwest quarter of said Section 26;

29. Thence Northerly to the Northwest corner of said Section 26;

30. Thence Westerly to the Southwest corner of Section 21, T2S, R6w:

31. Thence Southerly to the Southeast corner of Section 29, T2S, R6W;

32. Thence Westerly to the Southeast corner of Section 30, T2S, R6W;

33. Thence Southwesterly to the Southwest corner of Section 36, T 2 S, R 7 W;

34. Thence Southwesterly to the Southeast corner

of Section 3, T3S, R7W;

35. Thence Southwesterly to the Southwest corner of the Northeast quarter of Section 10, T3S, R7W;

36. Thence Southerly to the Northeast corner of the Northwest quarter of Section 15, T3S, R7W;

37. Thence Southwesterly to the Southeast corner of the Northeast quarter of Section 16, T3S, R7W;

38. Thence Southwesterly to the Southwest corner of said Section 16;

39. Thence Southwesterly to the Southwest corner of the Northeast quarter of Section 20, T3S, R7W;

40. Thence Westerly to the Southwest corner of the Northwest quarter of said Section 20;

41. Thence Northerly to the Northwest corner of Section 17, T3S, R7W;

42. Thence Westerly to the Southwest corner of Section 7, T3S, R7W;

43. Thence Northerly to the Southwest corner of Section 6, T3S, R7W;

44. Thence Westerly to the Southwest corner of Section 1, T3S, R8W;

45. Thence Northerly to the Southeast corner of Section 35, T2S, R8W;

46. Thence Northwesterly to the Northwest corner of said Section 35;

47. Thence Northerly to the Southeast corner of Lot 33, as shown on Map of Tract 3193, recorded in Map Book 43, pages 46 and 47, Office of the County Recorder of San Bernardino County;

48. Thence Westerly to the Northwest corner of the Southwest quarter of Section 28, T2S, R8W;

49. Thence Northerly to the Southwest corner of Section 4, T2S, R8W;

50. Thence Westerly to the Southwest corner of Section 5, T2S, R8W;

51. Thence Northerly to the Southwest corner of Section 32, T1S, R8W;

52. Thence Westerly to the Southwest corner of Section 31, T1S, R8W;

53. Thence Northerly to the Southwest corner of Section 30, T1S, R8W;

54. Thence Northeasterly to the Southwest corner of Section 20, T1S, R8W;

55. Thence Northerly to the Northwest corner of the Southwest quarter of the Southwest quarter of said Section 20;

56. Thence Northwesterly to the Northeast corner of the Southeast quarter of the Southeast quarter of the Northwest quarter of Section 19, T1S, R8W;

57. Thence Easterly to the Northwest corner of Section 21, T1S, R8W;

58. Thence Northeasterly to the Southeast corner of the Southwest quarter of the Southwest quarter of Section 10, T1S, R8W;

59. Thence Northeasterly to the Southwest corner of Section 2, T1S, R8W;

60. Thence Northeasterly to the Southeast corner of the Northwest quarter of the Northwest quarter of Section 1, T1S, R8W;

61. Thence Northerly to the Northeast corner of the Northwest quarter of the Northeast quarter of Section 36, T1N, R8W;

62. Thence Northerly to the Southeast corner of Section 24, T1N, R8W;

63. Thence Northeasterly to the Southeast corner of the Northwest quarter of the Northwest quarter of Section 20, T1N, R7W; and

64. Thence Southerly to the Point of Beginning.

Sections Included

Said perimeter description includes all or portions of the following Townships, Ranges and Sections of San Bernardino Base and Meridian:

T1N, R5W - Sections: 30, 31 and 32

T1N, R6W - Sections: 8, 14, 15, 16, 17, 18, 19, 20, 21, 22, 23, 25, 26, 27, 28, 29, 30, 31, 32, 33, 34, 35 and 36

T1N, R7W - Sections: 19, 20, 24, 25, 26, 29, 30, 31, 32, 35 and 36

T1N, R8W - Sections: 25 and 36

T1S, R5W - Sections: 4, 5, 6, 7, 8, 9, 10, 11, 14, 15, 16, 17, 18, 19, 20, 21, 22, 28, 29, 30, 31 and 32.

T1S, R6W - Sections: 1 through 36, inclusive

T1S, R7W - Sections: 1 through 36, inclusive

T1S, R8W - Sections: 1, 2, 10, 11, 12, 13, 14, 15, 16, 19, 20, 21, 22, 23, 24, 25, 26, 27, 28, 29, 30, 31, 32, 33, 34, 35 and 36

T2S, R5W - Sections: 6, 7 and 18

T2S, R6W - Sections: 1, 2, 3, 4, 5, 6, 7, 8, 9, 10, 11, 12, 13, 14, 15, 16, 17, 18, 19, 20, 21, 22, 23, 24, 26, 29, 30 and 31

T2S, R7W - Sections: 1 through 36, inclusive

T2S, R8W - Sections: 1, 2, 3, 4, 5, 9, 10, 11, 12, 13, 14, 15, 16, 21, 22, 23, 24, 25, 26, 27, 28, 35 and 36

T3S, R7W - Sections: 2, 3, 4, 5, 6, 7, 8, 9, 10, 15, 16, 17 and 20

T3S, R8W - Section: 1.

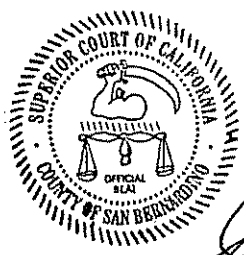

THE DOCUMENT TO WHICH THIS CERTIFICATION IS ATTACHED IS A FULL, TRUE AND CORRECT COPY OF THE ORIGINAL ON FILE AND OF RECORD IN MY OFFICE.

ATTEST OCT 2 9 2002

Clerk of the Superior Court of the State of California, in and for the County of San Bernardino

By _____ Deputy

Terry Wittenborn

92 pages

APPENDIX O – 2007 PEACE II AGREEMENT

Appendix O

2007 Peace II Agreement

October 25, 2007

PEACE II AGREEMENT:
PARTY SUPPORT FOR WATERMASTER'S OBMP IMPLEMENTATION PLAN, – SETTLEMENT AND RELEASE OF CLAIMS REGARDING FUTURE DESALTERS

WHEREAS, paragraph 41 of the Judgment entered in *Chino Basin Municipal Water District v. City of Chino* (San Bernardino Superior Court Case No. 51010) grants Watermaster, with the advice of the Advisory and Pool Committees, "discretionary powers in order to implement an Optimum Basin Management Program ("OBMP") for the Chino Basin";

WHEREAS, the Parties to the Judgment executed an agreement resolving their differences and pledging their support for Watermaster actions in accordance with specific terms in June of 2000 ("Peace Agreement");

WHEREAS, Watermaster approved Resolution 00-05, and thereby adopted the goals and objectives of the OBMP, the OBMP Implementation Plan and committed to act in accordance with the terms of the Peace Agreement;

WHEREAS, pursuant to Article IV, paragraph 4.2, each of the parties to the Peace Agreement agreed not to oppose Watermaster's adoption and implementation of the OBMP Implementation Plan attached as Exhibit "B" to the Peace Agreement;

WHEREAS, the Peace Agreement, the OBMP Implementation Plan and the Chino Basin Watermaster Rules and Regulations contemplate further actions by Watermaster in furtherance of its responsibilities under paragraph 41 of the Judgment and in accordance with the Peace Agreement and the OBMP Implementation Plan;

WHEREAS, the Parties to the Peace Agreement made certain commitments regarding the funding, design, construction and operation of Future Desalters;

WHEREAS, after receiving input from its stakeholders in the form of the Stakeholder's Non-Binding Term Sheet, Watermaster has proposed to adopt Resolution 07-05 attached as Exhibit "1" hereto to further implement the OBMP through a suite of measures commonly referred to and herein defined as "Peace II Measures", including but not limited to the 2007 Supplement to the OBMP, the Second Amendment to the Peace Agreement, amendments to Watermater's Rules and Regulations, the purchase and sale of water within the Overlying (Non-Agricultural) Pool and certain Judgment amendments; and

NOW, THEREFORE, in consideration of the mutual promises specified herein and by conditioning their performance under this Agreement upon the conditions precedent set forth in Article III herein, the Watermaster Approval, and Court Order, and for other good and valuable consideration, the Parties agree as follows:

ARTICLE I
DEFINITIONS AND RULES OF CONSTRUCTION

1.1 Definitions.

(a) "Desalters" means Desalters and Future Desalters collectively, as defined in the Peace Agreement.

(b) "Hydraulic Control" means the reduction of groundwater discharge from the Chino North Management Zone to the Santa Ana River to de minimus quantities. The Chino North Management Zone is defined in the 2004 Basin Plan amendment (RWQCB resolution R8-2004-001) attached hereto as Exhibit "B."

(c) "Leave Behind" means a contribution to the Basin from water held in storage within the Basin under a Storage and Recovery Agreement that may be established by Watermaster from time to time that may reflect any or all of the following: (i) actual losses; (ii) equitable considerations associated with Watermaster's management of storage agreements; and (iii) protection of the long-term health of the Basin against the cumulative impacts of simultaneous recovery of groundwater under all storage agreements.

(d) Re-Operation" means the controlled overdraft of the Basin by the managed withdrawal of groundwater Production for the Desalters and the potential increase in the cumulative un-replenished Production from 200,000 authorized by paragraph 3 of the Engineering Appendix Exhibit I to the Judgment, to 600,000 acre feet for the express purpose of securing and maintaining Hydraulic Control as a component of the Physical Solution.

(e) Unless otherwise expressly provided herein, all definitions set forth in the Peace Agreement and the Judgment are applicable to the terms as they are used herein.

1.2 Rules of Construction.

(a) Unless the context clearly requires otherwise:

(i) The plural and singular forms include the other;

(ii) "Shall," "will," "must," and "agrees" are each mandatory;

(iii) "May" is permissive;

(iv) "Or" is not exclusive;

(v) "Includes" and "including" are not limiting; and

(vi) "Between" includes the ends of the identified range.

(b) Headings at the beginning of Articles, paragraphs and subparagraphs of this Agreement are solely for the convenience of the Parties, are not a part of this Agreement and shall not be used in construing it.

(c) The masculine gender shall include the feminine and neuter genders and vice versa.

(d) The word "person" shall include individual, partnership, corporation, limited liability company, business trust, joint stock company, trust, unincorporated association, joint venture, governmental authority, water district and other entity of whatever nature.

(e) Reference to any agreement (including this Agreement), document, or instrument means such agreement, document, instrument as amended or modified and in effect from time to time in accordance with the terms thereof and, if applicable, the terms thereof.

(f) Except as specifically provided herein, reference to any law, statute or ordinance, regulation or the like means such law as amended, modified, codified or reenacted, in whole or in part and in effect from time to time, including any rules and regulations promulgated thereunder.

ARTICLE II
COMPLIANCE WITH CEQA

2.1 Project Description. The proposed project description regarding the design, permitting, construction and operation of Future Desalter, securing Hydraulic Control through Basin Re-Operation is set forth in Attachment "A" to Watermaster Resolution 07-05 attached hereto as Exhibit "1."

2.2 Acknowledgment of IEUA as the Lead Agency for CEQA Review. IEUA has been properly designated as the "Lead Agency" for the purposes of completing environmental assessment and review of the proposed project.

2.3 Commitments are Consistent with CEQA. The Parties agree and acknowledge that no commitment will be made to carry out any "project" under the amendments to the OBMP and within the meaning of CEQA unless and until the environmental review and assessment that may be required by CEQA for that defined "project" have been completed.

2.4 Reservation of Discretion. Execution of this Agreement is not intended to commit any Party to undertake a project without compliance with CEQA or to commit the Parties individually or collectively to any specific course of action, which would result in the present approval of a future project.

2.5 No Prejudice by Comment or Failure to Comment. Nothing contained in environmental review of the Project, or a Party's failure to object or comment thereon, shall limit any

Party's right to allege that "Material Physical Injury" will result or has resulted from the implementation of the OBMP or its amendment.

ARTICLE III
CONDITIONS PRECEDENT

3.1 Performance Under Articles IV-XII is Subject to Satisfaction of the Conditions Precedent. Each Party's obligations under this Agreement are subject to the satisfaction of the following conditions precedent on or before the dates specified below, unless satisfaction or a specified condition or conditions is waived in writing by all other Parties:

(a) Watermaster approval of Resolution 07-05 in a form attached hereto as Exhibit "1," including the following Attachments thereto

(i) the amendments to the Chino Basin Watermaster Rules and Regulations set forth in Attachment "F" thereto.

(ii) the 2007 Supplement to the OBMP Implementation Plan set forth in Attachment "D" thereto.

(iii) the amendments to the Judgment set forth in Attachments "H, I, and J" thereto.

(iv) the Second Amendment to the Peace Agreement set forth in Attachment "L" thereto.

(v) the Purchase and Sale Agreement for the Purchase of Water by Watermaster From the Overlying (Non-Agricultural) Pool as set forth in Attachment G thereto.

(b) The execution of the proposed Second Amendment to the Peace Agreement by all Parties to the Peace Agreement .

(c) Court approval of the proposed Judgment Amendments and a further order of the Court directing Watermaster to proceed in accordance with the terms of the Peace II Measures as embodied in Resolution 07-05.

ARTICLE IV
MUTUAL ACKNOWLEDGEMENT AND COVENANTS

4.1 Acknowledgment of Peace II Measures. The collective actions of Watermaster set forth in Watermaster Resolution 07-05 and the Attachments thereto (Peace II Measures) constitute further actions by Watermaster in implementing the OBMP in accordance with the grant and limitations on its discretionary authority set forth under paragraph 41 of the Judgment

4.2 Non-Opposition. No Party to this Agreement shall oppose Watermaster's adoption of Resolution 07-05 and implementation of the Peace II measures as embodied therein

including the Judgment Amendments, Amendments to the Peace Agreement, the 2007 Supplement to the OBMP Implementation Plan and Amendments to the Chino Basin Watermaster's Rules and Regulations or to Watermaster's execution of memoranda of agreement that are not materially inconsistent with the terms contained therein. Notwithstanding this covenant, no party shall be limited in their right of participation in all functions of Watermaster as they are provided in the Judgment or to preclude a Party to the Judgment from seeking judicial review of Watermaster determinations pursuant to the Judgment or as otherwise provided in this Agreement.

4.3 Consent to Amendments. Each Party expressly consents to the Judgment amendments and modifications set forth in Watermaster's Resolution 07-05.

4.4 Non-Agricultural Pool Intervention. The Parties acknowledge and agree that any Party to the Judgment shall have the right to purchase Non-Agricultural overlying property within the Basin and appurtenant water rights and to intervene in the Non-Agricultural Pool.

ARTICLE V
FUTURE DESALTERS

5.1 Purpose. Watermaster plans to coordinate and the Parties to the Judgment plan to arrange for the physical capacity and potable water use of water from the Desalters. Desalters in existence on the effective date of this Agreement will be supplemented to provide the required capacity to cumulatively produce approximately 40,000 acre-feet per year of groundwater from the Desalters by 2012.

5.2 2007 Supplement to the OBMP Implementation Plan. The OBMP Implementation Plan will be supplemented as set forth in the 2007 Supplement to the OBMP Implementation Plan to reflect that Western Municipal Water District ("WMWD"), acting independently or in its complete discretion with the City of Ontario ("Ontario") or the Jurupa Community Services District ("Jurupa") or both, will exercise good faith and reasonable best efforts to arrange for the design, planning, and construction of Future Desalters in accordance with the 2007 Supplement to the OBMP Implementation Plan, to obtain Hydraulic Control, further Re-Operation and support the Future Desalters.

5.3 Implementation. WMWD, acting independently or in its complete discretion with Ontario, Jurupa, or both, will exercise good faith and reasonable best efforts to arrange for the design, planning, and construction of Future Desalters in accordance with the 2007 Supplement to the OBMP Implementation Plan, to account for Hydraulic Control, Re-Operation and Future Desalters.

(a) WMWD, acting independently or in its complete discretion with Ontario or Jurupa or both, will exercise good faith and reasonable best efforts to proceed in accordance with the timeline for the completion of design, permitting, finance and construction as attached hereto as Exhibit "2"

(b) WMWD, acting independently or in its complete discretion with the City of Ontario or the Jurupa Community Services District or both, will provide quarterly progress reports to Watermaster and the Court.

5.4 Project Description. The Future Desalters will add up to 9 mgd to existing Desalters. This will include production capacity from new groundwater wells that will be located in the Southerly end of the Basin, as depicted in Exhibit "3" attached hereto and incorporated herein by this reference. The final design and construction of Future Desalters *may* depend on the terms and conditions that may be freely arrived at by fair bargaining among WMWD and the Chino Basin Desalter Authority ("CDA") or whether it is required to build stand-alone facilities or both. There are material yield benefits to the Parties to the Judgment that are achieved by obtaining Hydraulic Control through Basin Re-Operation. The extent of these benefits is somewhat dependent upon the final location of new production facilities within the southerly end of the Basin. Accordingly, Watermaster will ensure that the location of Future Desalter groundwater production facilities will achieve both Hydraulic Control and maximize yield enhancement by their location emphasizing groundwater production from the Southerly end of the Basin.

5.5 Implementing Agreements. Within twenty-four (24) months of the effective date, WMWD, acting independently or in its complete discretion with the City of Ontario or the Jurupa Community Services District or both, will exercise good faith and reasonable best efforts to complete final binding agreement(s) regarding Future Desalters that includes the following key terms:

(a) Arrangements for WMWD's purchase of product water from CDA;

(b) Arrangements with CDA, Jurupa and other Chino Basin parties for the common use of existing facilities, if any;

(c) Arrangement with the owners of the SARI line;

(d) Arrangements with the Appropriative Pool regarding the apportionment of any groundwater produced as controlled overdraft in accordance with the Physical Solution between Desalters I, Desalters II on the one hand and the Future Desalters on the other hand;

(e) WMWD's payment to Watermaster to reimburse Parties to the Judgment for their historical contributions towards the OBMP, if any;

(f) The schedule for approvals and project completion.

5.6 Reservation of Discretion. Nothing herein shall be construed as committing WMWD, or any members of CDA to take any specific action(s) to accommodate the needs or requests of the other, Watermaster, or any Party to the Judgment, whatever the request may be.

5.7 Condition Subsequent. WMWD's obligation to execute a binding purchase agreement with CDA or to independently develop the Future Desalters is subject to the express condition subsequent that the total price per acre-foot of water delivered must not be projected to exceed the sum of the following: (i) the full MWD Tier II Rate; (ii) the MWD Treatment Surcharge calculated in terms of an annual average acre-foot charge; and (iii) $150 (in 2006 dollars) per acre-foot of water delivered to account for water supply reliability.

(a) The full acre-foot cost to Western for Capital and O&M (assuming the priority allocation of controlled overdraft), includes:

(i) the delivery of the desalted water to its Mockingbird Reservoir or directly to the City of Norco,

(ii) any applicable ongoing Watermaster assessments, payments to CDA and JCSD and for SARI utilization.

(b) Provided that if third-party funding, grants and a MWD subsidy under the Local Resources Program or otherwise should reduce Western's costs to an amount which is $75 (in 2006 dollars) below the cap described in paragraph 5.5, Western will transmit an amount equal to fifty (50) percent of the amount less than the computed price cap less $75 (in 2006 dollars) to Watermaster.

(c) Western may elect to exercise its right of withdrawal under this paragraph 5.7 within 120 days following the later of: (1) completion of preliminary design; or (2) the certification of whatever CEQA document is prepared for the project, but not later than sixty (60) days thereafter and in no event after a binding water purchase agreement has been executed.

5.8 Limitations. The operation of the Future Desalters will be subject to the following limitations:

(a) Well Location. New groundwater production facilities for the Future Desalters will be located in the southern end of the Basin to achieve the dual purpose of obtaining Hydraulic Control and increasing Basin yield.

(i) New wells will be constructed in the shallow aquifer system among Desalter I wells No. 1 through 4 and west of Desalter I.

(ii) So long as these wells produce at least one-half of the Future Desalter groundwater, the Future Desalters shall be entitled to first priority for the allocation of the 400,000 acre-feet of controlled overdraft authorized by the Judgment Amendments to Exhibit I.

(b) Export. The export of groundwater from the Basin must be minimized. WMWD will present a plan for export minimization to the Watermaster for review and approval prior to operation of the Future Desalters.

(i) Watermaster will account for water imported and exported by WMWD.

(ii) Watermaster will prepare an initial reconciliation of WMWD's imports and exports at the end of the first ten (10) years of operation and every year thereafter to determine whether a "net export" occurred.

(iii) WMWD will pay an assessment, if any, on all "net exports" in accordance with Judgment Exhibit "H," paragraph 7(b) after the initial reconciliation is completed at the end of the first ten (10) years of operation.

ARTICLE VI
GROUNDWATER PRODUCTION BY AND REPLENISHMENT FOR DESALTERS

6.1 Acknowledgment. The Parties acknowledge that the hierarchy for providing Replenishment Water for the Desalters is set forth in Article VII, paragraph 7.5 of the Peace Agreement, and that this section controls the sources of water that will be offered to offset Desalter Production.

6.2 Peace II Desalter Production Offsets. To facilitate Hydraulic Control through Basin Re-Operation, in accordance with the 2007 Supplement to the OBMP Implementation Plan and the amended Exhibits G and I to the Judgment, additional sources of water will be made available for purposes of Desalter Production and thereby some or all of a Replenishment obligation. With these available sources, the Replenishment obligation attributable to Desalter production in any year will be determined by Watermaster as follows:

(a) Watermaster will calculate the total Desalter Production for the preceding year and then apply a credit against the total quantity from:

(i) the Kaiser account (Peace Agreement Section 7.5(a).);

(ii) dedication of water from the Overlying (Non-Agricultural) Pool Storage Account or from any contribution arising from an annual authorized Physical Solution Transfer in accordance with amended Exhibit G to the Judgment;

(iii) New Yield (other than Stormwater (Peace Agreement Section 7.5(b));

(iv) any declared losses from storage in excess of actual losses enforced as a "Leave Behind";

(v) Safe Yield that may be contributed by the parties (Peace Agreement Section 7.5(c));

(vi) any Production of groundwater attributable to the controlled overdraft authorized pursuant to amended Exhibit I to the Judgment.

(b) To the extent available credits are insufficient to fully offset the quantity of groundwater production attributable to the Desalters, Watermaster will use water or revenue obtained by levying the following assessments among the members of the Overlying (Non-Agricultural) Pool and the Appropriative Pool to meet any remaining replenishment obligation as follows.

(i) A Special OBMP Assessment against the Overlying (Non-Agricultural) Pool as more specifically authorized and described in amendment to Exhibit "G" paragraph 8(c) to the Judgment will be dedicated by Watermaster to further off-set replenishment of the Desalters. However, to the extent there is no remaining replenishment obligation attributable to the Desalters in any year after applying the off-sets set forth in 6.2(a), the OBMP Special Assessment levied by Watermaster will be distributed as provided in Section 9.2 below. The Special OBMP Assessment will be assessed pro-rata on each member's share of Safe Yield, followed by

(ii) A Replenishment Assessment against the Appropriative Pool, pro-rata based on each Producer's combined total share of Operating Safe Yield and the previous year's actual production. Desalter Production is excluded from this calculation. However, if there is a material reduction in the net cost of Desalter product water to the purchasers of product water, Watermaster may re-evaluate whether to continue the exclusion of Desalter Production but only after giving due regard to the contractual commitment of the parties.

(iii) The quantification of any Party's share of Operating Safe Yield does not include the result of any land use conversions.

(c) The rights and obligations of the parties, whatever they may be, regarding Replenishment Assessments attributable to all Desalters and Future Desalters in any renewal term of the Peace Agreement are expressly reserved and not altered by this Agreement.

ARTICLE VII
YIELD ACCOUNTING

7.1 New Yield Attributable to Desalters. Watermaster will make an annual finding as to the quantity of New Yield that is made available by Basin Re-Operation including that portion that is specifically attributable to the Existing and Future Desalters. Any subsequent recalculation of New Yield as Safe Yield by Watermaster will not change the priorities set forth above for offsetting Desalter production as set forth in Article VII, Section 7.5 of the Peace Agreement. For the initial term of the Peace Agreement, neither Watermaster nor the Parties will request that Safe Yield be recalculated in a manner that incorporates New Yield *attributable to the Desalters* into the determination of Safe Yield so that this source of supply will be available for Desalter Production rather than for use by individual parties to the Judgment.

7.2 Apportionment of Controlled Overdraft. Within twelve (12) months of the court approval and no later than December 1, 2008, with facilitation by Watermaster, WMWD and the Appropriative Pool will establish by mutual agreement the portion of the 400,000 acre-feet of the controlled overdraft authorized by the amendment to Exhibit "I" to the Judgment that will be allocated among the Desalters and pursuant to a proposed schedule.

(a) To the extent the groundwater wells for the Future Desalters pump at least fifty (50) percent groundwater from the southern end of the Basin as set forth in Exhibit "3" the *Future Desalters* will be entitled to first priority to the controlled overdraft authorized by the amendment to Exhibit "I" to the Judgment.

(b) WMWD and the Appropriative Pool will exercise good faith and reasonable best efforts to arrive at a fair apportionment. Relevant considerations in establishing the apportionment include, but are not limited to: (i) the nexus between the proposed expansion and achieving Hydraulic Control;(ii) the nexus between the project and obtaining increased yield; (iii) the identified capital costs; (iv) operating and maintenance expenses; and (iv) the availability of third-party funding.

(c) The parties will present any proposed agreement regarding apportionment to Watermaster. Watermaster will provide due regard to any agreement between WMWD and the Appropriative Pool and approve it so long as the proposal phases the Re-Operation over a reasonable period of time to secure the physical condition of Hydraulic Control and will achieve the identified yield benefits while at the same time avoiding Material Physical Injury or an inefficient use of basin resources.

(d) If WMWD and the Appropriative Pool do not reach agreement on apportionment of controlled overdraft to Future Desalters, then no later than August 31, 2009, the members of the Appropriative Pool will submit a plan to Watermaster that achieves the identified goals of increasing the physical capacity of the Desalters and potable water use of approximately 40,000 acre-feet of groundwater production from the Desalters from the Basin no later than 2012. The Appropriative Pool proposal must demonstrate how it has provided first priority to the Future Desalters if the conditions of paragraph 7.2(a) are met.

(e) Watermaster will have discretion to apportion the controlled overdraft under a schedule that reflects the needs of the parties and the need for economic certainty and the factors set forth in Paragraph 7.2(a) above. Watermaster may exercise its discretion to establish a schedule for Basin Re-Operation that best meets the needs of the Parties to the Judgment and the physical conditions of the Basin, including but not limited to such methods as "ramping up," "ramping down," or "straight-lining."

(i) An initial schedule will be approved by Watermaster and submitted to the Court concurrent with Watermaster Resolution 07-05.

(ii) Watermaster may approve and request Court approval of revisions to the initial schedule if Watermaster's approval and request are supported by a technical report demonstrating the continued need for access to controlled overdraft, subject to the limitations set forth in amended Exhibit "I" to the Judgment and the justification for the amendment.

7.3 Suspension. An evaluation of Watermaster's achievement of Basin outflow conditions, achievement of Hydraulic Control and compliance with Regional Board orders will be completed annually by Watermaster. Re-Operation and Watermaster's apportionment of controlled overdraft will not be suspended in the event that Hydraulic Control is secured in any year *before* the full 400,000 acre-feet has been produced so long as: (i) Watermaster has prepared, adopted and the Court has approved a contingency plan that establishes conditions and protective measures to avoid Material Physical Injury and that equitably distributes the cost of any mitigation attributable to the identified contingencies, and (ii) Watermaster is in substantial compliance with a Court approved Recharge Master Plan as set forth in Paragraph 8.1 below.

7.4 Storage: Uniform Losses. The Parties acknowledge that Watermaster has assessed a two (2)-percent loss on all groundwater presently held in storage to reflect the current hydrologic condition. As provided in the Peace Agreement, Watermaster will continue to maintain a minimum 2 (two) percent loss until substantial evidence exists to warrant the imposition of another loss factor. However, the Parties further acknowledge and agree that losses have been substantially reduced through the OBMP Implementation Plan and the operation of Desalters I and II and that once Hydraulic Control is achieved outflow and losses from the Basin will have been limited to de minimis quantities. Therefore, Watermaster may establish uniform losses for all water held in storage based on whether the Party has substantially contributed to Watermaster reducing losses and ultimately securing and maintaining Hydraulic Control.

(a) Pre-Implementation of the Peace Agreement. The uniform annual loss (leave behind) of six (6) percent will be applied to all storage accounts to address actual losses, management and equitable considerations arising from the implementation of the Peace Agreement, the OBMP Implementation Plan, the 2007 Supplement to the OBMP Implementation Plan, including but not limited to the Desalters and Hydraulic Control unless the Party holding the storage account: (i) has previously contributed to the implementation of the OBMP as a Party to the Judgment, is in compliance with their continuing covenants under the Peace Agreement or in lieu thereof they have paid or delivered to Watermaster "financial equivalent" consideration to offset the cost of past performance prior to the implementation of the OBMP and (ii) promised continued future compliance with Watermaster Rules and Regulations. In the event that a Party satisfies 7.4(a)(i) and7.4(a)(ii) they will be assessed a minimum loss of two (2) percent against all water held in storage to reflect actual estimated losses. Watermaster's evaluation of the sufficiency of any consideration or financial equivalency may take into account the fact that one or more Parties to the Judgment are not similarly situated.

(b) Post-Hydraulic Control. Following Watermaster's determination that it has achieved Hydraulic Control and for so long as Watermaster continues to sustain losses from the Basin to the Santa Ana River at a de minimis level (less than one (1) percent), any Party to the Judgment (agency, entity or person) may qualify for the Post-Hydraulic Control uniform loss percentage of less than 1 percent if they meet the criteria of 7.4(a)(i) and 7.4(a)(ii) above.

7.5 Allocation of Losses. Any losses from storage assessed as a Leave Behind in excess of actual losses ("dedication quantity") will be dedicated by Watermaster towards groundwater Production by the Desalters to thereby avoid a Desalter replenishment obligation that may then exist *in the year* of recovery. Any dedication quantity which is not required to offset Desalter Production in the year in which the loss is assessed, will be made available to the members of the Appropriative Pool. The dedication quantity will be pro-rated among the members of the Appropriative Pool in accordance with each Producer's combined total share of Operating Safe Yield and the previous year's actual production. However, before any member of the Appropriative Pool may receive a distribution of any dedication quantity, they must be in full compliance with the 2007 Supplement to the OBMP Implementation Plan and current in all applicable Watermaster assessments.

ARTICLE VIII
RECHARGE

8.1 Update to the Recharge Master Plan. Watermaster will update and obtain Court approval of its update to the Recharge Master Plan to address how the Basin will be contemporaneously managed to secure and maintain Hydraulic Control and subsequently operated at a new equilibrium at the conclusion of the period of Re-Operation. The Recharge Master Plan will be jointly approved by IEUA and Watermaster and shall contain recharge estimations and summaries of the projected water supply availability as well as the physical means to accomplish the recharge projections. Specifically, the Plan will reflect an appropriate schedule for planning, design, and physical improvements as may be required to provide reasonable assurance that following the full beneficial use of the groundwater withdrawn in accordance with the Basin Re-Operation and authorized controlled overdraft, that sufficient Replenishment capability exists to meet the reasonable projections of Desalter Replenishment obligations. With the concurrence of IEUA and Watermaster, the Recharge Master Plan will be updated and amended as frequently as necessary with Court approval and not less than every five (5) years. Costs incurred in the design, permitting, operation and maintenance of recharge improvements will be apportioned in accordance with the following principles.

a. Operations and Maintenance. All future operations and maintenance costs attributable to all recharge facilities utilized for recharge of recycled water in whole or in part unfunded from third party sources, will be paid by the Inland Empire Utilities Agency ("IEUA") and Watermaster. The contribution by IEUA will be determined annually on the basis of the relative proportion of recycled water recharged bears to the total recharge from all sources in the prior year. For example, if 35 percent of total recharge in a single year is from recycled water, then IEUA will bear 35 percent of the operations and maintenance costs. All remaining unfunded costs attributable to the facilities used by Watermaster will be paid by Watermaster.

i. IEUA reserves discretion as to how it assesses its share of costs.

ii. Watermaster will apportion its costs among the members of the stakeholders in accordance with Production, excluding Desalter Production.

iii. The operations and maintenance costs of water recharged by aquifer storage and recovery will not be considered in the calculation other than by express agreement.

b. Capital. Mutually approved capital improvements for recharge basins that do or can receive recycled water constructed pursuant to the Court approved Recharge Master Plan, if any, will be financed through the use of third party grants and contributions if available, with any unfunded balance being apportioned 50 percent each to IEUA and Watermaster. The Watermaster contribution shall be allocated according to shares of Operating Safe Yield. All remaining unfunded costs attributable to the facilities used by Watermaster will be paid by Watermaster.

8.2 Coordination. The members of the Appropriative Pool will coordinate the development of their respective Urban Water Management Plans and Water Supply Master Plans with Watermaster as follows.

(a) Each Appropriator that prepares an Urban Water Management Plan and Water Supply Plans will provide Watermaster with copies of their existing and proposed plans.

(b) Watermaster will use the Plans in evaluating the adequacy of the Recharge Master Plan and other OBMP Implementation Plan program elements.

(c) Each Appropriator will provide Watermaster with a draft in advance of adopting any proposed changes to their Urban Water Management Plans and in advance of adopting any material changes to their Water Supply Master Plans respectively in accordance with the customary notification routinely provided to other third parties to offer Watermaster a reasonable opportunity to provide informal input and informal comment on the proposed changes.

(d) Any party that experiences the loss or the imminent threatened loss of a material water supply source will provide reasonable notice to Watermaster of the condition and the expected impact, if any, on the projected groundwater use.

8.3 Continuing Covenant. To ameliorate any long-term risks attributable to reliance upon un-replenished groundwater production by the Desalters, the annual availability of any portion of the 400,000 acre-feet set aside as controlled overdraft as a component of the Physical Solution, is expressly subject to Watermaster making an annual finding about whether it is in substantial compliance with the revised Watermaster Recharge Master Plan pursuant to Paragraphs 7.3 and 8.1 above.

8.4 Acknowledgment re 6,500 Acre-Foot Supplemental Recharge. The Parties make the following acknowledgments regarding the 6,500 Acre-Foot Supplemental Recharge:

(a) A fundamental premise of the Physical Solution is that all water users dependent upon Chino Basin will be allowed to pump sufficient waters from the Basin to meet their requirements. To promote the goal of equal access to groundwater within all areas and sub-areas of the Chino Basin, Watermaster has committed to use its best efforts to direct recharge relative to production in each area and sub-area of the Basin and to achieve long-term balance between total recharge and discharge. The Parties acknowledge that to assist Watermaster in providing for recharge, the Peace Agreement sets forth a requirement for Appropriative Pool purchase of 6,500 acre-feet per year of Supplemental Water for recharge in Management Zone 1 (MZ1). The purchases have been credited as an addition to Appropriative Pool storage accounts. The water recharged under this program has not been accounted for as Replenishment water.

(b) Watermaster was required to evaluate the continuance of this requirement in 2005 by taking into account provisions of the Judgment, Peace Agreement and OBMP, among all other relevant factors. It has been determined that other obligations in the Judgment and Peace Agreement, including the requirement of hydrologic balance and projected replenishment obligations, will provide for sufficient wet-water recharge to make the separate commitment of Appropriative Pool purchase of 6,500 acre-feet unnecessary. Therefore, because the recharge target as described in the Peace Agreement has been achieved, further purchases under the program will cease and Watermaster will proceed with operations in accordance with the provisions of paragraphs (c), (d) and (e) below.

(c) The parties acknowledge that, regardless of Replenishment obligations, Watermaster will independently determine whether to require wet-water recharge within MZ1 to maintain hydrologic balance and to provide equal access to groundwater in accordance with the provisions of this Section 8.4 and in a manner consistent with the Peace Agreement, OBMP and the Long Term Plan for Subsidence.". Watermaster will conduct its recharge in a manner to provide hydrologic balance within, and will emphasize recharge in MZ1. Accordingly, the Parties acknowledge and agree that each year Watermaster shall continue to be guided in the exercise of its discretion concerning recharge by the principles of hydrologic balance.

(d) Consistent with its overall obligations to manage the Chino Basin to ensure hydrologic balance within each management zone, for the duration of the Peace Agreement (until June of 2030), Watermaster will ensure that a minimum of 6,500 acre-feet of wet water recharge occurs within MZ1 on an annual basis. However, to the extent that water is unavailable for recharge or there is no replenishment obligation in any year, the obligation to recharge 6,500 acre-feet will accrue and be satisfied in subsequent years.

(1) Watermaster will implement this measure in a coordinated manner so as to

facilitate compliance with other agreements among the parties, including but not limited to the Dry-Year Yield Agreements.

(2) In preparation of the Recharge Master Plan, Watermaster will consider whether existing groundwater production facilities owned or controlled by producers within MZ1 may be used in connection with an aquifer storage and recovery ("ASR") project so as to further enhance recharge in specific locations and to otherwise meet the objectives of the Recharge Master Plan.

(e) Five years from the effective date of the Peace II Measures, Watermaster will cause an evaluation of the minimum recharge quantity for MZ1. After consideration of the information developed in accordance with the studies conducted pursuant to paragraph 3 below, the observed experiences in complying with the Dry Year Yield Agreements as well as any other pertinent information, Watermaster may increase the minimum requirement for MZ1 to quantities greater than 6,500 acre-feet per year. In no circumstance will the commitment to recharge 6,500 acre-feet be reduced for the duration of the Peace Agreement.

ARTICLE IX

9.1 Basin Management Assistance. Three Valleys Municipal Water District ("TVMWD") shall assist in the management of the Basin through a financial contribution of $300,000 to study the feasibility of developing a water supply program within Management Zone 1 of the Basin or in connection with the evaluation of Future Desalters. The study will emphasize assisting Watermaster in meeting its OBMP Implementation Plan objectives of concurrently securing Hydraulic Control through Re-Operation while attaining Management Zone 1 subsidence management goals. Further, TVMWD has expressed an interest in participating in future projects in the Basin that benefit TVMWD. If TVMWD wishes to construct or participate in such future projects, TVMWD shall negotiate with Watermaster in good faith concerning a possible "buy-in" payment.

9.2 Allocation of Non-Agricultural Pool OBMP Special Assessment

a. For a period of ten years from the effective date of the Peace II Measures, any water (or financial equivalent) that may be contributed from the Overlying (Non-Agricultural) Pool in accordance with paragraph 8(c) of Exhibit G to the Judgment (as amended) will be apportioned among the members of the Appropriative Pool in each year as follows:

(i)	City of Ontario.	80 af
(ii)	City of Upland	161 af
(iii)	Monte Vista Water District	213 af
(iv)	City of Pomona	220 af
(v)	Marygold Mutual Water Co	16 af
(vi)	West Valley Water District	15 af

(vii) Santa Ana River Water Co. 31 af

b. In the eleventh year from the effective date of the Peace II Measures and in each year thereafter in which water may be available from the Overlying (Non-Agricultural) Pool in excess of identified Desalter replenishment obligations as determined in accordance with Section 6.2 above, any excess water (or financial equivalent) will be distributed pro rata among the members of the Appropriative Pool based upon each Producer's combined total share of Operating Safe Yield and the previous year's actual production.

ARTICLE X
SETTLEMENT AND RELEASE

10.1 Settlement. By its execution of this Agreement, the Parties mutually and irrevocably, fully settle their respective claims, rights and obligations, whatever they may be, regarding the design, funding, construction and operation of Future Desalters as set forth in and arising from Article VII of the Peace Agreement.

10.2 Satisfaction of Peace Agreement Obligation Regarding Future Desalters. The Parties' individual and collective responsibilities arising from the Part VII of the Peace Agreement and the OBMP Implementation Plan regarding the planning, design, permitting, construction and operation of Future Desalters, whatever they may be, are unaffected by this Agreement. However, upon the completion of a 10,000 AFY (9 mgd) expansion of groundwater production and desalting from Desalter II as provided for herein, the Parties will be deemed to have satisfied all individual and collective pre-existing obligations arising from the Peace Agreement and the OBMP Implementation Plan, whatever they may be, with regard to Future Desalters as described in Part VII of the Peace Agreement and the OBMP Implementation Plan.

10.3 Satisfaction of Pomona Credit. In recognition of the ongoing benefits received by TVMWD through the City of Pomona's anion exchange project, as its sole and exclusive responsibility, TVMWD will make an annual payment to Watermaster in an amount equal to the credit due the City of Pomona under Peace Agreement Paragraph 5.4(b) ("the Pomona Credit").

(a) Within ninety (90) days of each five-year period following the Effective Date of this Agreement, in its sole discretion TVMWD shall make an election whether to continue or terminate its responsibilities under this paragraph. TVMWD shall provide written notice of such election to Watermaster.

(b) Watermaster will provide an annual invoice to TVMWD for the amount of the Pomona Credit.

(c) Further, in any renewal term of the Peace Agreement, TVMWD will continue to make an equivalent financial contribution which TVMWD consents to

Watermaster's use for the benefit of MZ1, subject to the same conditions set forth above with respect to TVMWD's payment of the "Pomona Credit".

(d) In the event TVMWD elects to terminate is obligation under this Paragraph, the Peace Agreement and the responsibility for satisfying the Pomona Credit will remain unchanged and unaffected, other than as it will be deemed satisfied for each five-year period that TVMWD has actually made the specified payment.

10.4 Release. Upon WMWD's completion of a 10,000 AFY (9 mgd) expansion of groundwater production and desalting in a manner consistent with the parameters set forth in this Agreement, each Party, for itself, its successors, assigns, and any and all persons taking by or through it, hereby releases WMWD and IEUA from any and all obligations arising from WMWD's and IEUA's responsibility for securing funding, designing, and constructing Future Desalters as set forth in or arising exclusively from Article VII of the Peace Agreement and the Program Elements 3, 6, and 7, OBMP Implementation Plan only, and each Party knowingly and voluntarily waives all rights and benefits which are provided by the terms and provisions of section 1542 of the Civil Code of the State of California, or any comparable statute or law which may exist under the laws of the State of California, in or arising from WMWD's and IEUA's responsibility for securing funding, designing, and constructing Future Desalters as set forth in or arising exclusively from Article VII of the Peace Agreement and the OBMP Implementation Plan only. The Parties hereby acknowledge that this waiver is an essential and material term of this release. The Parties, and each of them, acknowledge that Civil Code section 1542 provides as follows:

A GENERAL RELEASE DOES NOT EXTEND TO CLAIMS WHICH THE CREDITOR DOES NOT KNOW OR SUSPECT TO EXIST IN HIS OR HER FAVOR AT THE TIME OF EXECUTING THE RELEASE, WHICH IF KNOWN BY HIM OR HER MUST HAVE MATERIALLY AFFECTED HIS OR HER SETTLEMENT WITH THE DEBTOR.

Each Party understands and acknowledges that the significance and consequence of this waiver of Civil Code section 1542 is the waiver of any presently unknown claims as described above, and that if any Party should eventually suffer additional damages arising out of the respective claim that Party will not be able to make any claim for those additional damages. Further, all Parties to this Agreement acknowledge that they consciously intend these consequences even as to claims for such damages that may exist as of the date of this Agreement but which are not known to exist and which, if known, would materially affect the Parties' respective decision to execute this Agreement, regardless of whether the lack of knowledge is the result of ignorance, oversight, error, negligence, or any other cause.

10.5 Assessments. In view of the substantial investments previously made and contemplated by Watermaster and the parties over the term of the Peace Agreement and in particular to implement the OBMP, the parties desire substantial certainty regarding Watermaster's principles of cost allocation. The principles set forth in the Peace Agreement and the

Peace II Measures including those stated herein, constitute a fair and reasonable allocation of responsibility among the stakeholders. Accordingly, other than in the event of an emergency condition requiring prompt action by Watermaster or to correct a manifest injustice arising from conditions not presently prevailing in the Basin and unknown to Watermaster and the parties and then only to the extent Watermaster retains discretion, Watermaster will maintain the principles of cost allocation for apportioning costs and assessments as provided in the Judgment and now implemented through the Peace Agreement and the Peace II Measures for the balance of the initial Term of the Peace Agreement. For the balance of the initial Term of the Peace Agreement, the parties to the Peace II Agreement will waive any objections to the Watermaster's principles of cost allocation other than as to issues regarding whether Watermaster has: (i) properly followed appropriate procedures; (ii) correctly computed assessments and charges; and (iii) properly reported .

10.6 Reservation of Rights. Nothing herein shall be construed as precluding any party to the Judgment from seeking judicial review of any Watermaster action on the grounds that Watermaster has failed to act in accordance with the Peace Agreement as amended, this Agreement, the Amended Judgment, the OBMP Implementation Plan as amended and applicable law.

ARTICLE XI
TERM

11.1 Commencement. This Agreement will become effective upon the satisfaction of all conditions precedent and shall expire on the Termination Date.

11.2 Termination. This Agreement is coterminous with the initial term of the Peace Agreement and will expire of its own terms and terminate on the date of the Initial Term of the Peace Agreement.

ARTICLE XIII
GENERAL PROVISIONS

12.1 Construction of this Agreement. Each Party, with the assistance of competent legal counsel, has participated in the drafting of this Agreement and any ambiguity should not be construed for or against any Party on account of such drafting.

12.2 Awareness of Contents/Legal Effect. The Parties expressly declare and represent that they have read the Agreement and that they have consulted with their respective counsel regarding the meaning of the terms and conditions contained herein. The parties further expressly declare and represent that they fully understand the content and effect of this Agreement and they approve and accept the terms and conditions contained herein, and that this Agreement is executed freely and voluntarily.

12.3 Counterparts. This Agreement may be executed in counterparts. This Agreement shall become operative as soon as one counterpart hereof has been executed by each Party. The counterparts so executed shall constitute on Agreement notwithstanding that the signatures of all Parties do not appear on the same page.

IN WITNESS THEREOF, the Parties hereto have set forth their signatures as of the date written below:

Dated:

Party: _____

By _____

Exhibit 1

September 21, 2007

WATERMASTER RESOLUTION
NO. 07-05

RESOLUTION OF THE CHINO BASIN WATERMASTER REGARDING THE PEACE II AGREEMENT AND THE OBMP IMPLEMENTATION PLAN

WHEREAS, the Judgment in the Chino Basin Adjudication, *Chino Municipal Water District v. City of Chino, et al.,* San Bernardino Superior Court No. 51010, created the Watermaster and directed it to perform the duties as provided in the Judgment or ordered or authorized by the court in the exercise of the Court's continuing jurisdiction;

WHEREAS, Watermaster has the express powers and duties as provided in the Judgment or as "hereafter" ordered or authorized by the Court in the exercise of the Court's continuing jurisdiction" subject to the limitations stated elsewhere in the Judgment;

WHEREAS, Watermaster, with the advice of the Advisory and Pool Committees has discretionary powers to develop an OBMP for Chino Basin, pursuant to Paragraph 41 of the Judgment;

WHEREAS, in June of 2000, the Parties to the Judgment executed the Peace Agreement providing for the implementation of the OBMP and Watermaster adopted Resolution 00-05 whereby it agreed to act in accordance with the Peace Agreement;

WHEREAS, the Court ordered Watermaster to proceed in accordance with the Peace Agreement and the OBMP Implementation, Exhibit "B" thereto;

WHEREAS, Watermaster adopted and the Court approved Chino Basin Watermaster Rules and Regulations in June of 2001;

WHEREAS, the Peace Agreement, the OBMP Implementation Plan and the Chino Basin Watermaster Rules and Regulations reserved Watermaster's discretionary powers in accordance with Paragraph 41 of the Judgment, with the advice from the Advisory and Pool Committees, and contemplated further implementing actions by Watermaster;

WHEREAS, the Judgment requires that Watermaster in implementing the Physical Solution, and the OBMP have flexibility to consider and where appropriate make adjustments after taking into consideration technological, economic, social and institutional factors in maximizing the efficient use of the waters of the Basin.

WHEREAS, the Parties to the Judgment provided input into the creation of a "Stakeholder Non-Binding Term Sheet" that articulated methods to maximize beneficial use of the Basin ("Peace II measures") was distributed to and considered by each of the Pools, the Advisory Committee and the Watermaster Board and subsequently transmitted to the Court;

WHEREAS, Watermaster will continue to require that to the extent any of the Peace II Implementing Measures constitute "projects" within the meaning of the California Environmental Quality Act ("CEQA"), compliance with CEQA will be required as a pre-condition of Watermaster's issuance of any final, binding approvals; and

WHEREAS, the actions articulated in the "Stakeholder Non-Binding Term Sheet" and contemplated herein to maximize the beneficial use of the groundwater and the Basin benefit the Basin and the Parties to the Judgment.

NOW, THEREFORE, IT IS HEREBY RESOLVED AND DETERMINED THAT:

1. Watermaster caused the completion of a preliminary engineering, hydrogeologic, and technical evaluation of the physical impacts to the Basin and to the Parties to the Judgment that may result from implementation of the Peace II measures. The preliminary evaluation was conducted by Mark Wildermuth of Wildermuth Environmental.

2. The Assistant to the Special Referee, Joe Scalmanini of Luhdorff & Scalmanini Consulting Engineers, transmitted his technical review in March of 2007 ("Report"). In relevant part, the Report states:

> "For planning level analysis, the existing model is a useful and applicable tool to simulate approximate basin response to management actions that involve the quantities and distribution of pumping and recharge in the basin. For example, for the most notable of its applications to date, which has been to conduct a planning level analysis of intended future hydraulic control, the model can be confidently utilized to examine whether groundwater conditions (levels) will form in such a way that hydraulic control will be achieved as result of basin re-operation and, if not, what other changes in basin operation are logically needed to achieve it." (Report at p. 37)

3. Watermaster caused the preparation of a specific project description set forth in Attachment "A" hereto for the purpose of conducting a more refined engineering, hydrogeologic and technical evaluation of the physical impacts to the Basin and to the Parties to the Judgment that may result from implementation of the Peace II measures.

4. Watermaster caused the completion of a macro socioeconomic analysis by Dr. David Sunding, a PhD in economics and professor at the University of California Berkeley set forth in Attachment "B" hereto. The macro analysis provided an evaluation of the macro costs and benefits to the parties as a whole that may be attributable to the Peace II measures.

5. Watermaster caused an update of the previously completed socioeconomic analysis conducted pursuant to the Judgment. The analysis was completed by Dr. Sunding, and it considered the positive and negative impacts of implementing the OBMP, the Peace Agreement, and the Peace II measures, including Watermaster assessments. The analysis also addressed the potential distribution of costs and benefits among the parties that were initiated

with the approval of the Peace Agreement. The study was completed in final draft form on September 13, 2007 and is set forth in Attachment "C" hereto. Each of the Parties to the Judgment has had the opportunity to comment on earlier drafts of the report and on the final draft of the report and to consider the analyses contained therein prior to Watermaster's approval of this Resolution 07-05.

9. Watermaster has caused the preparation of the 2007 Supplement to the Optimum Basin Management Program ("OBMP") addressing Watermaster's efforts to, among other things; pursue Hydraulic Control through Basin Re-Operation as set forth in Attachment "D" hereto.

10. Watermaster has prepared a summary of the cumulative total of groundwater production and desalting from all authorized Desalters and other activities authorized by the 2007 Supplement to the OBMP Implementation Plan as amended as provided in the Peace Agreement in a schedule that: (i) identifies the total quantity of groundwater that will be produced through the proposed Basin Re-Operation to obtain Hydraulic Control, and (ii) characterizes and accounts for all water that is projected to be produced by the Desalters for the initial Term of the Peace Agreement (by 2030) as dedicated water, New Yield, controlled overdraft pursuant to the Physical Solution or subject to Replenishment . This schedule is set forth in Attachment "E" hereto. Watermaster will modify its projections from time to time, as may be prudent under the circumstances.

11. More than fifteen months have passed since the Non-Binding Term Sheet was initially published by Watermaster in its current form and transmitted to the Court for its consideration and more than six months have passed following Watermaster's declaration that any party interested in participating in the development and construction of Future Desalters should identify their interest in making a proposal and no party has stepped forward and made a responsive proposal in lieu of the Western Municipal Water District proposal.

12. The Peace II measures collectively consist of:

(a) Watermaster's election to exercise its reserved discretion as provided in the Judgment, the Peace Agreement and the OBMP Implementation Plan, to amend the Watermaster Rules and Regulations as more fully set forth in Attachment "F" attached hereto and incorporated herein by this reference;

(b) Watermaster's execution and Court approval of the proposed Purchase and Sale Agreement with the Non-Agricultural (Overlying) Pool as more fully set forth in Attachment "G" attached hereto and incorporated herein by this reference;

(c) Watermaster's and the Court's approval of the proposed amendments to the Judgment as more fully set forth in Attachment "H", Attachment "I" and Attachment "J" attached hereto and incorporated herein by this reference;

(d) Watermaster's approval of and further agreement to act in accordance with the Peace II Agreement, including the provisions related to Future Desalters, as more fully set forth in Attachment "K" attached hereto, upon a further order of the

Court directing Watermaster to proceed in accordance with its terms;

(e) Watermaster's and the Court's approval of the 2007 Supplement to the OBMP Implementation Plan as they are more fully set forth in Attachment "D" attached hereto and incorporated herein by this reference; and

(f) Execution of the proposed Second Amendment to the Peace Agreement as more fully set forth in Attachment "L" attached hereto and incorporated herein by this reference, approval by Watermaster and a further order of the Court directing Watermaster to proceed in accordance with its terms.

13. The Overlying (Non-Agricultural), the Overlying (Agricultural) Pool, and the Appropriative Pool have approved the Peace II measures and recommended Watermaster's adoption of this Resolution 07-05

14. The Advisory Committee has approved the Peace II measures and recommended Watermaster's adoption of this Resolution 07-05.

15. In adopting this Resolution and by its agreement to implement the Peace II measures, Watermaster is not committing to carry out any project within the meaning of CEQA unless and until CEQA compliance has been demonstrated for any such project.

16. The Watermaster Board will transmit this Resolution 07-05, and the Peace II implementing measures, and the referenced Attachments to the Court along with other supporting materials and request the Court to approve the proposed Judgment Amendments and to further order that Watermaster proceed to further implement the 2007 Supplement to the OBMP as provided in the Peace II measures.

Date: 10-25-07

for CHINO BASIN WATERMASTER

Attachment A

September 21, 2007

Attachment "A"
Project Description
for the
2007 Amendment to the Chino Basin
Optimum Basin Management Program

Introduction

This document contains the project description for the Chino Basin desalting and re-operation programs that has been distilled from various planning investigations and was described in the Stakeholder Non-Binding Term Sheet. This document was prepared for use in: (a) Chino Basin Watermaster's evaluation of the potential actions to cause Material Physical Injury to the Basin or the Parties to the Judgment; (b) in connection with Watermaster's request for Court review and approval of proposed actions in further implementation of the Optimum Basin Management Program ("OBMP"); and (c) an environmental impact report to be prepared as part of the expansion of the desalters.

Requirements of the 2004 Amendment to the Water Quality Control Plan for the Santa Ana Watershed

Water quality objectives are established by the Regional Water Quality Control Board, Santa Ana Region ("Regional Board") to preserve the beneficial uses of the Chino Basin and the Orange County Basin located downstream of the Chino Basin. Prior to the 2004 Amendment, the Regional Water Quality Control Plan (Basin Plan) contained restrictions on the use of recycled water within the Chino Basin for irrigation and groundwater recharge. The pre-2004 Basin Plan contained TDS "anti-degradation" objectives that ranged from 220 to 330 mg/L over most of the Chino Basin. Ambient TDS concentrations slightly exceeded these objectives. There was no assimilative capacity for TDS; thus, the use of the Inland Empire Utilities Agency's ("IEUA") recycled water for irrigation and groundwater recharge would have required mitigation even though the impact of this reuse would not have materially impacted future TDS concentrations or impaired the beneficial uses of Chino Basin groundwater.

In 1995, the Regional Board initiated a collaborative study with 22 water supply and wastewater agencies, including Watermaster and the IEUA, to devise a new TDS and nitrogen (total inorganic nitrogen or TIN) control strategy for the Santa Ana Watershed. This study culminated in the Regional Board's adoption of the 2004 Basin Plan Amendment in January 2004 (Santa Ana Regional Water Quality Control Board, 2004). The 2004 Basin Plan Amendment included two sets of TDS objectives – antidegradation objectives that ranged between 280, 250 and 260 mg/L for Management Zones 1, 2, and 3, respectively; and a "maximum benefit"-based TDS objective of 420 mg/L for the Chino North Management Zone, which consists of almost all of Management Zones 1, 2, and 3. The relationship of the Management Zones that were developed for the OBMP and the "maximum benefit" based management zones is shown in Figure 1. Under the "maximum benefit"-based objective, the new TDS concentration limit for recycled water

that is to be used for recharge and other direct uses is 550 mg/L as a 12-month average. This discharge requirement has been incorporated into the IEUA's National Pollutant Discharge Elimination System (NPDES) permits for its wastewater treatment facilities.

In order for the IEUA and Watermaster to gain access to the assimilative capacity afforded by the "maximum benefit"-based objectives, the IEUA and Watermaster have to demonstrate that the maximum beneficial use of the waters of the State is being achieved. The 2004 Basin Plan Amendment contains a series of commitments that must be met in order to demonstrate that the maximum benefit is being achieved. These commitments include:

1. The implementation of a surface water monitoring program;
2. The implementation of groundwater monitoring programs;
3. The expansion of Desalter I to 10 million gallons per day (mgd) and the construction of a 10-mgd Desalter II
4. The commitment to future desalters pursuant to the OBMP and the Peace Agreement;
5. The completion of the recharge facilities included in the Chino Basin Facilities Improvement Program;
6. The management of recycled water quality;
7. The management of the volume-weighted TDS and nitrogen in artificial recharge to less than or equal to the maximum benefit objectives;
8. The achievement and maintenance of hydraulic control of subsurface outflows from the Chino Basin to protect the Santa Ana River water quality; and
9. The determination of the ambient TDS and nitrogen concentrations in the Chino Basin every three years.

The IEUA and Watermaster have previously demonstrated compliance with all of these requirements with the sole exception of hydraulic control. Hydraulic control is defined as the reduction of groundwater discharge from the Chino North Management Zone to the Santa Ana River to de minimus quantities. Hydraulic control ensures that the water management activities in the Chino North Management Zone do not result in material adverse impacts on the beneficial uses of the Santa Ana River downstream of Prado Dam. Achieving hydraulic control also maximizes the safe yield of the Chino Basin as required by Paragraph 30 and 41 of the Judgment. Two reports by Wildermuth Environmental, Inc. ("WEI"), prepared in 2006 at the direction of Watermaster, demonstrate that hydraulic control has not yet been achieved in the area between the Chino Hills and Chino Desalter I, well number 5 (WEI, 2006a and b).

Without hydraulic control, the IEUA and Watermaster will have to cease the use of recycled water in the Chino Basin and will have to mitigate the effects of using recycled water back to the adoption of the 2004 Basin Plan Amendment, which is December 2004. The demand for recycled water in the Chino Basin is projected to reach from about 12,500 acre-ft/yr in 2005 to 58,000 acre-ft/yr in 2010, 68,000 acre-ft/yr in 2015, 79,000 acre-ft/yr in 2020 and 89,000 acre-ft/yr in 2025. Recycled water reduces the demand of

State Water Project ("SWP") water by an equal amount, thereby reducing the demand on the Sacramento Delta and reducing energy consumption. Recycled water is a critical element of the OBMP and water supply reliability in the Chino Basin area.

Failure to achieve hydraulic control could lead to restrictions from the Regional Board on the use of imported SWP water for replenishment when the TDS concentration in SWP water exceeds the antidegradation objectives. The Regional Board produced a draft order that would treat the recharge of SWP water as a waste discharge. There would be no assimilative capacity if the Chino Basin antidegradation objectives were in force. Figure 2 shows the percent of time that the TDS concentration at Devil Canyon is less than or equal to a specific value based on observed TDS concentrations at the Devil Canyon Afterbay. This restriction will occur about 35, 52, and 50 percent of the time for Management Zones 1, 2, and 3, respectively. This will affect other basins in the Santa Ana Watershed, and the Regional Board is encouraging all basin managers to propose "maximum benefit"-based objectives similar to those in Chino Basin. With the "maximum benefit"-based TDS objective in the Chino Basin, there is assimilative capacity, and there would be no such restriction on the recharge of imported water.

The Regional Board is using its discretion in granting "maximum benefit" objectives even though hydraulic control has not been demonstrated. The Regional Board will continue to use "maximum benefit"-based objectives in the Chino Basin as long as the IEUA and Watermaster continue to develop and implement, in a timely manner, the OBMP desalter program as described in the project description below.

The Stakeholder Non-Binding Term Sheet: Peace II Implementing Measures

Under Watermaster oversight, the Chino Basin OBMP stakeholders have been engaged in, among other things, complying with the Peace Agreement provision regarding the planning and financing of the expansion of the OBMP desalting program to its full planned capacity generally referred to as Future Desalters (See Peace Agreement Article VII.). The stakeholders have been evaluating various alternatives since early 2004 and produced the Stakeholders' Non-Binding Term Sheet that was transmitted to the Court along with a request by Watermaster for further technical review by the Assistant to the Special Referee in May of 2006. The Assistant's review was completed in March of 2007.

The Non-Binding Term Sheet includes several items that will collectively further implement the existing OBMP Implementation Plan (Peace II Measures). The two items of interest to this project description are: the expansion of the desalting program and "Basin Re-Operation," which are both physically described in Section II, Refined Basin Management Strategy, subsections A and B; and Section IV, Future Desalters.

The construction of a new desalter well field will be sized and located to achieve hydraulic control. The desalter will produce at least 9 mgd of product water. New groundwater production for the expanded desalter program will occur in the Southern end of the basin. Some of this new desalter supply will come from a new well field that will

be constructed in a location among Desalter I wells 1 through 4 and west of these wells. These wells will be constructed to pump groundwater from the shallow part of the aquifer system, which is defined herein to be the saturated zone that occurs within about 300 feet of the ground surface. The total groundwater pumping for all of the desalters authorized in the term sheet will be about 40,000 acre-ft/yr.

"Re-operation" means the increase in controlled overdraft, as defined in the Judgment, from 200,000 acre-ft over the period of 1978 through 2017 to 600,000 acre-ft through 2030 with the 400,000 acre-ft increase allocated specifically to the meet the replenishment obligation of the desalters. Re-operation is required to achieve hydraulic control. Re-Operation and Watermaster's apportionment of controlled overdraft will not be suspended in the event Hydraulic Control is secured in any year *before* the full 400,000 acre-feet has been produced so long as: (i) Watermaster has prepared, adopted and the Court has approved a contingency plan that establishes conditions and protective measures to avoid Material Physical Injury and that equitably addresses this contingency, and (ii) Watermaster continues to demonstrate credible material progress toward obtaining sufficient capacity to recharge sufficient quantities of water to cause the Basin to return to a new equilibrium at the conclusion of the Re-Operation period. In addition to contributing to the achievement of hydraulic control, Re-operation will contribute to the creation of new yield. Watermaster has the discretion to apportion the 400,000 acre-feet increase in controlled overdraft under a schedule for re-operation that best meets the needs of the Parties and the conditions of the basin over the Initial Term of the Peace Agreement (before June 30, 2030).

The Project Description

The proposed project has two main features: the expansion of the desalter program such that the groundwater pumping for the desalters will reach about 40,000 acre-ft and that the pumping will occur in amounts and at locations that contribute to the achievement of hydraulic control; and the strategic reduction in groundwater storage (re-operation) that, along with the expanded desalter program, significantly achieves hydraulic control.

The Expanded Desalting Program. A new well field, referred to as the Chino Creek Well Field (CCWF), will be constructed. The capacity of this well field could range from about 5,000 acre-ft/yr to 7,700 acre-ft/yr. The capacity of the CCWF will be determined during the design of the well field. Groundwater produced at the CCWF will be conveyed to Desalter I. The approximate location of the CCWF is shown in Figure 3. The capacity of Desalter I will not be increased; although, it is likely that the treatment systems at Desalter I will be modified to accommodate the chemistry of the raw water pumped from the CCWF. The product water capacity of Desalter I is about 14,200 acre-ft/yr which corresponds to a raw water pumping requirement of about 16,100 acre-ft/yr. The volume of groundwater pumping at existing Desalter I wells 13, 14, and 15 and conveyed to Desalter I will be reduced to accommodate new pumping at the CCWF.

The treatment capacity of Desalter II will be increased from 10,400 acre-ft/yr to about 21,000 acre-ft/yr, which corresponds to the raw water pumping requirement of 11,800

acre-ft/yr expanding to 23,900 acre-ft/yr. The increase in groundwater pumping for Desalter II will come in part from greater utilization of the existing Desalter II wells and the addition of new wells to the Desalter II well field from either the construction of new wells and/or connecting Desalter I wells 13, 14, and 15.

The new product water developed at Desalter II would be conveyed to the Jurupa Community Services District ("JCSD"), the City of Ontario, and/or Western Municipal Water District ("WMWD") through existing and new pipelines. The facilities required to convey this water include pipelines, pump stations, and reservoirs. The precise locations of these facilities are unknown at this time.

The most current working description of these facilities is contained a report that was prepared for the City of Ontario and WMWD, entitled Chino Desalter Phase 3 Alternatives Evaluation (Carollo, 2007). Currently (September 2007), the City of Ontario and the WMWD are working with the JCSD and others to refine the alternatives in the Carollo report. The assumed startup for the expanded desalters is January 2013.

Finally, 40,000 acre-ft/yr of groundwater is expected to be produced by all Existing and Future Desalters. The parties that are engaged in developing the desalter expansion are planning for a total of 40,000 acre-ft/yr of desalter groundwater pumping. Watermaster, on behalf of the Parties, will review the desalter pumping requirements to achieve hydraulic control during the project evaluation in the summer and fall of 2007.

Re-Operation. Through re-operation and pursuant to a Judgment Amendment, Watermaster will engage in controlled overdraft and use up to a maximum of 400,000 acre-ft to off-set Desalter replenishment through 2030. After the 400,000 acre-ft is exhausted and the period of Re-Operation is complete, Watermaster will recalculate the safe yield of the basin. The Re-Operation will have no impact on Operating Safe Yield or on the parties' respective rights thereto. For project evaluation purposes, the Re-Operation and controlled overdraft of 400,000 will be examined under two different schedules that bracket the range in expected schedules. The first schedule will be based on allocating the 400,000 acre-ft at a constant percentage of desalter pumping such that the 400,000 acre-ft is used up in a constant proportion of the desalter pumping through 2030. The second schedule will use the controlled overdraft to off-set desalter the applicable replenishment obligation completely each year until the 400,000 acre-ft is completely exhausted.

The New Yield as defined by the Peace Agreement, attributable to the authorized desalters and the reduction in storage from re-operation, will be assigned to the authorized desalters. The resulting replenishment obligation assigned to the authorized desalters will then be handled as any other replenishment obligation pursuant to the Judgment. The New Yield is expected to come from a reduction in groundwater discharge from the Chino Basin to the Santa Ana River within the reservoir created by Prado Dam and from new induced recharge of the Santa Ana River upstream of Prado Dam.

Other Important Facility and Operational Plans that Will Occur Concurrently with the Proposed Project

Expansion of Artificial Recharge Capacity. Watermaster and the IEUA will need to expand artificial recharge capacity in the Chino Basin to meet future replenishment obligations. This will occur independently from the proposed project. Current supplemental water recharge capacity is about 91,000 acre-ft/yr. The required recharge capacity to meet future replenishment obligations is about 150,000 acre-ft, a capacity expansion of about 59,000 acre-ft/yr. This expansion will occur through construction of new spreading basins, improvements to existing spreading basins and stormwater retention facilities, aquifer storage and recovery wells. The proposed project will be analyzed without recharge expansion projects.

Expansion of Storage and Recovery Programs. Currently, there is only one groundwater storage program approved in the Chino Basin: the 100,000 acre-ft Dry Year Yield Program with the Metropolitan Water District of Southern California (Metropolitan). Metropolitan, the IEUA, and Watermaster are considering expanding this program an additional 50,000 acre-ft to 150,000 acre-ft over the next few years. Watermaster is also considering an additional 150,000 acre-ft in programs with non-party water agencies. The total volume of groundwater storage allocated to storage programs that could overlay the proposed project is about 300,000 acre-ft.

These storage programs, if not sensitive to the needs of hydraulic control, could cause groundwater discharge to the Santa Ana River and result in non-compliance with hydraulic control and a loss in safe yield. There have been no planning investigations that articulate how the expansion from the existing 100,000 acre-ft program to the future 300,000 acre-ft set of programs will occur and thus this expansion is not included herein

References

Santa Ana Regional Water Quality Control Board, 2004, Resolution No R8-2004-0001, http://www.waterboards.ca.gov/santaana/pdf/04-01.pdf

Stakeholder Non-Binding Term Sheet, in the form transmitted to the Court, 2006

Wildermuth Environmental, Inc., 2006a. Draft Report, Analysis of Future Replenishment and Desalter Plans Pursuant to the Peace Agreement and Peace II Process, April 2006; prepared for the Chino Basin Watermaster.

Wildermuth Environmental, Inc., 2006b. Chino Basin Maximum Benefit Monitoring Program Annual Report, April 2006; prepared for the Chino Basin Watermaster and Inland Empire Utilities Agency.

Wildermuth Environmental, Inc., 2006c. Draft Report, Addendum to the Draft April 2006 Report, Analysis of Future Replenishment and Desalter Plans Pursuant to the Peace

Agreement and Peace II Process, December 2006; prepared for the Chino Basin Watermaster.

Carollo Engineers, 2007. Chino Desalter Phase 3 Alternatives Evaluation, May 2007; Prepared for the City of Ontario and the Western Municipal Water District.

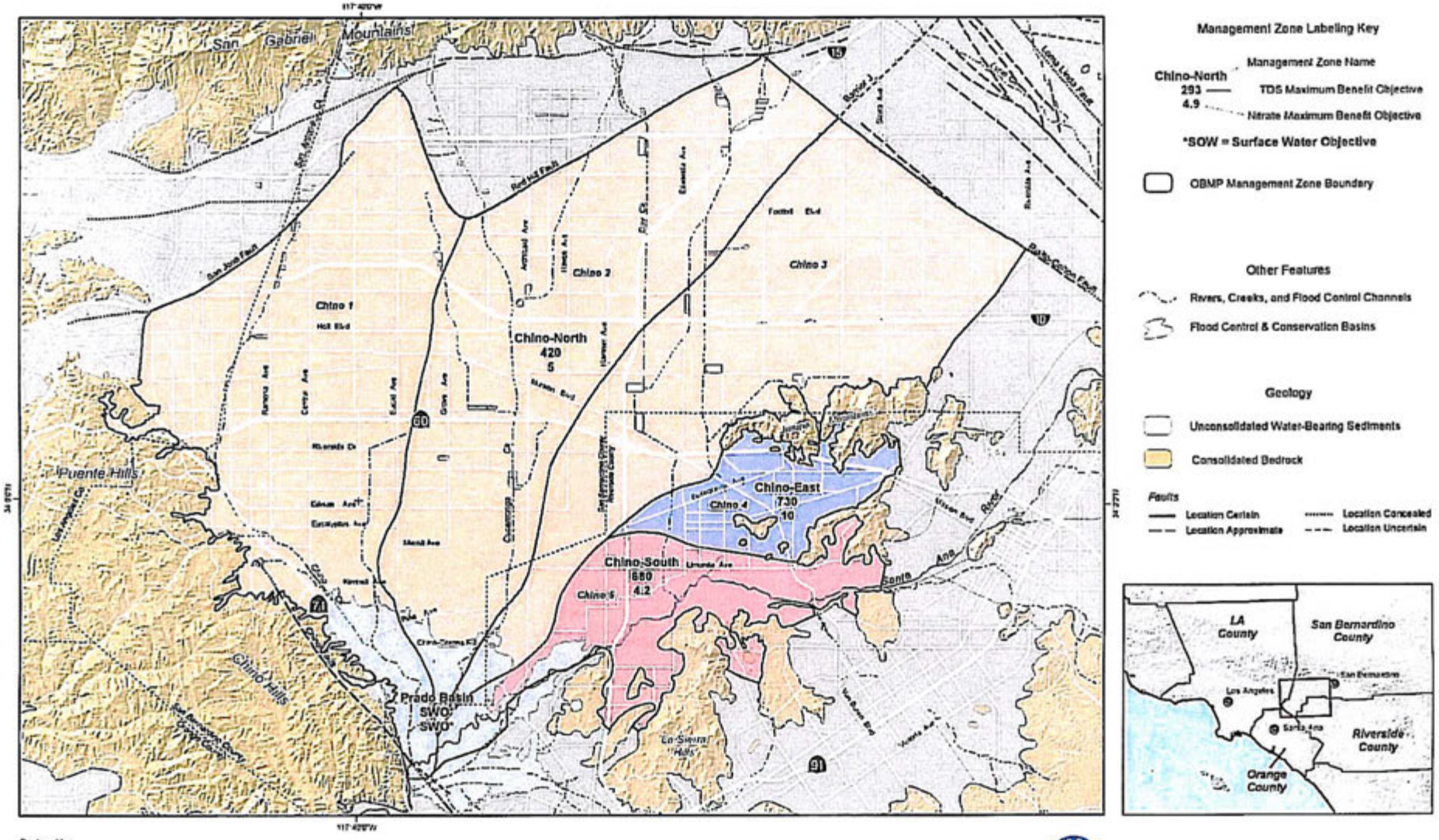

Produced by:
WILDERMUTH ENVIRONMENTAL INC
Author: AEM
Date: 20070720
File: Figure_1.mxd

Chino Basin Optimum Basin Management Program
Peace II Amendment (2007)

Comparison of OBMP Management Zones and RWQCB Basin Plan Management Zones

Figure 1

Figure 2
Historical TDS Concentration in State Water Project Water at Devil Canyon

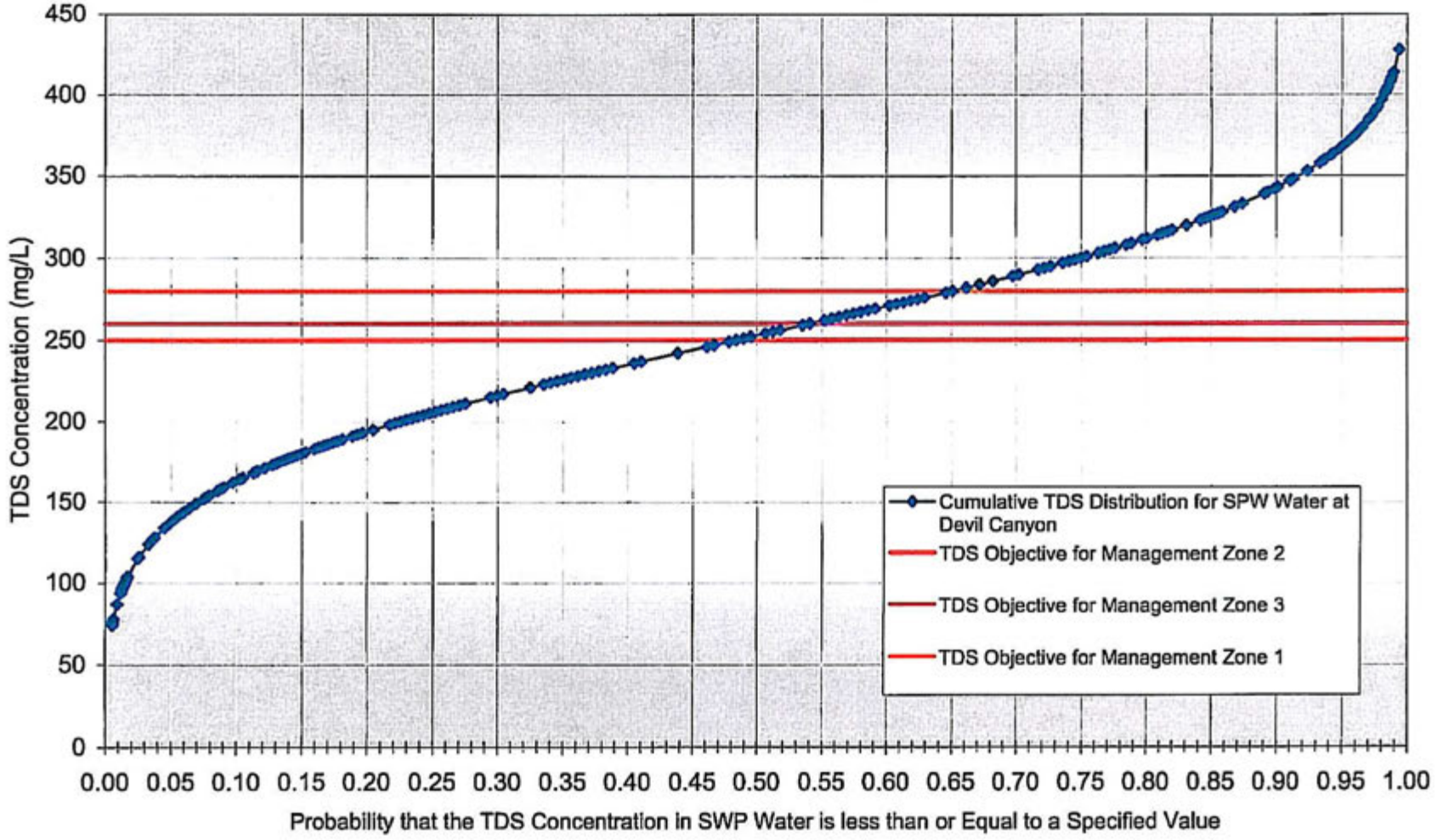

20070701Figure 2 Devils_TDS.xls – Figure 2 Project Description

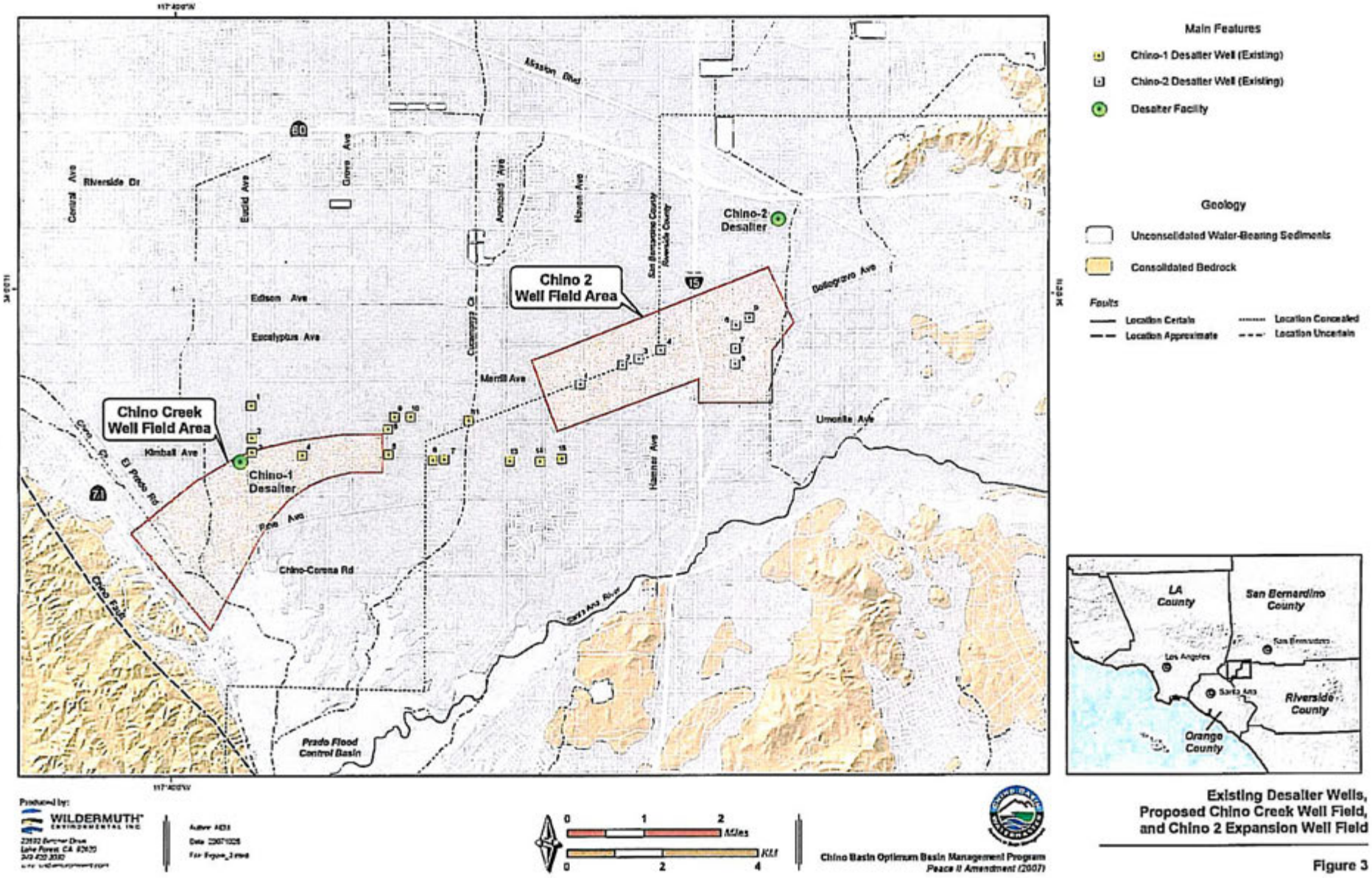

Existing Desalter Wells, Proposed Chino Creek Well Field, and Chino 2 Expansion Well Field

Figure 3

Attachment B

Analysis of Aggregate Costs and Benefits of Hydraulic Control, Basin Re-Operation and Desalter Elements of Non-Binding Term Sheet

Prof. David Sunding
UC Berkeley

November 29, 2006

Summary

The report measures the economic costs and benefits of achieving hydraulic control through re-operation of the Chino Basin. Various scenarios are considered in the analysis, with scenarios chosen to reflect uncertainty regarding future values of water, the time path of annual overdrafts selected to dewater the basin, and the use of the resulting induced inflow from the Santa Ana River. As shown in Table 1, depending on the scenario chosen, the net benefits of achieving hydraulic control through basin re-operation range between $283.1 million and $438.8 million in 2006 dollars.

1. Introduction

Hydraulic control refers to the elimination or reduction to negligible quantities of discharge from the Chino North Management Zone to the Santa Ana River. Basin re-operation is defined as the increase in controlled overdraft as defined in the Judgment from 200,000 acre-feet over the period 1978 through 2017, to 600,000 acre-feet through 2030 with the 400,000 acre-feet allocated specifically to meet the replenishment obligation of the desalters.

2. Framework

The model of groundwater value used in this report is standard in the academic literature.[1] The net benefits in each period resulting from access to a groundwater resource are the gains from pumping (i.e., the demand for water) minus the costs of extraction in the current period and a "user cost" term that reflects the change in future consumption possibilities resulting from current choices. The stream of annual net benefits is then discounted back to current dollars using a discount factor predicated on the rate of interest.

---

[1] Brozovic, N., D. Sunding and D. Zilberman, "Optimal Management of Groundwater Over Space and Time." *Frontiers in Water Resource Economics*. D. Berga and R. Goetz, eds. New York: Springer-Verlag, 2005; Gisser, M., and Sanchez, D.A. "Competition versus Optimal Control in Groundwater Pumping." *Water Resources Research* (1980): 638-642; Brown, G., Jr., and Deacon, R. "Economic Optimization of a Single-Cell Aquifer." *Water Resources Research* (1975): 557-564.

The interest rate used in the analysis is 5.5%. This rate corresponds to the current risk-free long-term rate of interest, a relevant rate for public agencies with good credit. The discount factor for a payment occurring in some future period t is then $(1.055)^{-t} \approx e^{-0.055t}$.

Let y_t denote groundwater produced during period t, and x_t equal the stock of groundwater at beginning of period t. The value of the groundwater resource is then

$$Value = \sum_{t=0}^{\infty} (1+r)^{-t} \left[B(y_t) - C(x_t, y_t) \right],$$

where $B(y_t)$ denotes the benefits from groundwater production in period t, and $C(x_t, y_t)$ is the cost of extraction and recharge. In an economic optimization model, the problem is to find the time path of production and stock that maximizes the present value of access to the aquifer, subject to physical constraints such as the equation of motion $x_{t+1} = x_t + g(x_t, y_t) - y_t$ (where $g(x_t, y_t)$ denotes natural and artificial recharge) and regulatory constraints such as water quality objectives and requirements to operate the basin in a steady-state condition.

Viewed this way, basin re-operation and its alternatives can be modeled as different evolutions of production, stock and recharge. The net benefit of a particular basin re-operation strategy versus a baseline that maintains the current stock of groundwater is the difference of present value resulting from a particular choice of these policy variables.

The study period extends indefinitely into the future, but the period between the present and 2030 is modeled in more detail. This feature results from the fact that the Peace Agreement lasts until 2030, and more detailed environmental and water use modeling is available to this date. As described below, terminal values are assigned to key parameters from 2031 on, and at this point the groundwater system in the Chino Basin is assumed to enter into a steady state, with no expected change in production, groundwater elevation or recharge amounts.

Table 2 displays the assumptions made about groundwater production from the Chino Basin. All figures in the table are common to all scenarios considered, and thus these assumptions are not the basis for differences in value between scenarios. The table shows groundwater production increasing steadily throughout the study period. Desalter production is also increasing throughout the study period. Operating yield is set at 145,000 acre-feet through 2017, at which point it declines to 140,000 acre-feet annually. Finally, new stormwater recharge is assumed to be 12,000 acre-feet annually.

It is necessary to describe a scenario without basin re-operation in order to calculate the net benefits, if any, from this type of strategy. Table 3 displays the physical consequences of such an alternative. If the basin is not de-watered, then hydraulic control will not be achieved, and there will be water quality costs as a result. One such consequence is that relatively high-quality water must be used for recharge. In particular, the Basin would lose the ability to use relatively inexpensive recycled water for replenishment purposes

and would be forced to use water purchased from MWD instead.[2] Thus, Table 3 shows that the entire replenishment obligation for both normal and desalter production is met through the purchase of replenishment water from MWD.

In the event that hydraulic control is achieved, there are two types of benefits to the Chino Basin as a whole. The first benefit relates to water quality. As discussed above, if hydraulic control is achieved, then recycled water can be used for 30% of the total Basin replenishment obligation, up to an assumed capacity of 30,000 acre-feet annually.[3] The second benefit is that lowering the groundwater elevation in the Basin induces an inflow of water from the Santa Ana River. Specifically, forgiving a reduction in the stock of groundwater in the Basin results in an average of 9,900 acre-feet annually until the 400,000 acre-feet of depletion credits are exhausted, and then 12,500 acre-feet annually thereafter. This natural recharge is new yield in the Basin; as discussed below, it can be used either for reducing the desalter replenishment obligation or as an asset in its own right.

3. Scenarios

The valuation model is implemented under a variety of assumptions about how re-operation will occur, how the Santa Ana River inflows are treated, and the level of future water prices. This section describes the construction of alternative scenarios.

Implementation of Basin Re-Operation

The basic principle of basin re-operation is that it is a means of achieving hydraulic control by increasing cumulative overdraft by 400,000 acre-feet through 2030. Overdraft is to be achieved by forgiving the replenishment obligation of the desalters by some annual amount over a defined period of time. This general principle is silent about *how* the total quantity of forgiveness of desalter replenishment is to be allocated over time.

This analysis considers two possible implementation scenarios. The first scenario, termed the straightline alternative, envisions an annual overdraft of 20,346 acre-feet occurring until 2030, at which time the annual overdraft would fall to zero and the system is assumed to enter into a new steady-state from 2031 onward. The second scenario, called the most rapid depletion path alternative, sets the annual overdraft to eliminate the desalter replenishment obligation for as long as possible.

Tables 4 and 7 display annual overdraft amounts under these two alternatives for implementing basin re-operation. As described, the straightline alternative entails constant annual overdraft quantities, resetting to zero from 2031 onwards. The most rapid

[2] Alternatively, recycled water would have to be desalted prior to recharge. Costs are not available at this time for this option.

[3] Assumptions provided by Watermaster staff. If hydraulic control is achieved, it may be possible to increase this limit. In this case, the benefits resulting from basin re-operation would increase.

depletion path reaches a maximum annual overdraft of 30,289 acre-feet before dropping to zero in 2020.

Allocation of Induced Santa Ana River Inflow

A second dimension along which the scenarios vary is with regard to the allocation of Santa Ana River inflows induced by the reduction of the groundwater stock. A total of 12,500 acre-feet of new yield is assumed to result from the dewatering, and the scenarios differ in terms of the use of this new yield. One scenario allocates all Santa Ana River inflows from re-operation to reducing the desalter replenishment obligation. An alternative scenario treats these inflows as a resource to be used for any purpose; consequently, desalter replenishment obligations are higher under this assumption.

Tables 5 and 6 relate to the straightline depletion case and show replenishment obligations and sources under the two Santa Ana River inflow allocation alternatives. In Table 5, new yield is allocated to desalter replenishment, and the desalter replenishment obligation is negligible in the near term and reaches a maximum of 9,943 acre-feet during the study period. In Table 6, by contrast, total replenishment obligations are higher since the new yield can be used for any chosen purpose.

Tables 8 and 9 show replenishment obligations under the most rapid depletion path scenario. Results are similar as in the straightline depletion scenario, with the exception that desalter replenishment is forestalled until 2025 if new yield is allocated to this purpose.

Future Water Prices

Given the important role of relative prices in the economic analysis, and given uncertainties regarding the evolution of water values in Southern California, the analysis considers two alternative scenarios regarding future water prices. These scenarios are taken from MWD and are commonly referred to as the high rate and low rate scenarios. MWD scenarios cover Tier 1 and Tier 2 water, as well as replenishment water. The high rate scenario has the Tier 2 rate growing at an annual rate of 3.11% for the next five years, and then by 4.50% from 2011 to 2030. The replenishment rate grows at 6.94% through 2011, and then at 4.50% to 2030. In the low rate scenario, the Tier 2 rate grows by 2.28% annually for the next five years, and then by 3.00% from 2011 to 2030. The replenishment rate is assumed to grow by 4.79% through 2011, and by 3.00% thereafter.

The current price of recycled water for replenishment is assumed to be $69 per acre-foot.[4] In the high rate scenario, this price was assumed to grow at the same rate of inflation as

[4] One public comment received after the July 26, 2006 presentation stated that the actual price paid for recycled water should be used in the analysis. While this price is not yet known, it is likely to exceed $69 per acre-foot. Note, however, that this study considers the aggregate costs and benefits of elements of the non-binding term sheet. Thus, changes in the price of recycled water have distributional as opposed to efficiency effects, that is, they change the relative level of benefits enjoyed by the parties in the Chino Basin rather than affecting the total level of benefits.

the Tier 2 and MWD replenishment prices: 4.50%. Similarly, the recycled water price grows by 3.00% annually in the low rate scenario.

4. Other Effects of Basin Re-Operation

An additional benefit of hydraulic control is a reduction in storage losses. Measuring the value of reduced storage losses is conditioned on several factors that are not fully known at present. Of course, the ex post performance of any groundwater storage program depends on the sequence of puts and takes, which depend in turn on the sequence of wet and dry years. Based on conversations with Watermaster staff, the groundwater storage program is assumed to be 400,000 acre-feet over the study period, but may range from 300,000 to 500,000 acre-feet.[5] Calculations provided by Wildermuth Environmental detail the relationship between average storage over the life of the MWD Dry Year Yield program and associated losses at 0.66 and 2 percent. Table 12 summarizes cumulative losses through 2028, together with present values calculated using the high and low rate scenarios for MWD replenishment rates as described above.

Assuming 2 percent loss and a 400,000 acre-foot storage program, the present value of reduced storage losses is $24.9 million in 2006 dollars in the high rate scenario and $20.4 million in the low rate scenario. These calculations are performed ex ante, and the actual magnitude of reduced storage losses will depend on factors including the size of the storage program, the percentage storage loss, the timing of puts and takes, and the actual replenishment rates charged by MWD. For the purpose of aggregating reduced storage loss benefits with other benefits and costs of basin re-operation, we will assume a 400,000 acre-foot storage program for both the high and low rate scenarios with storage losses equal to half of the amounts in Table 12 (recall that storage losses could range from 0 to 2 percent). The corresponding values of reduced storage losses are $12.4 million and $10.2 million for the high and low rate scenarios, respectively.

Achieving hydraulic control through basin re-operation will also result in higher pumping costs since forgiveness of the desalter replenishment operation is intended to lower the groundwater elevation in certain regions. The information needed to calculate the present value of increased pumping costs includes the quantity-weighted average change in lift in the Basin resulting from re-operation, the energy requirement per unit lift and energy costs per kilowatt-hour. Wildermuth Environmental provided the weighted average changes in groundwater elevation. The price of electricity is assumed to be $0.14/kwh, and the pumping efficiency is taken to be 75 percent. The California Energy Commission forecasts that commercial and agricultural electricity rates charged by investor-owner utilities operating in California will decline slightly in nominal terms until 2013, when

[5] The Peace Agreement provides that there is Target Storage of 500,000 acre-feet *in excess* of then existing storage, whereas this report only considers the Safe Harbor quantity of 500,000 acre-feet of storage in total. In some sense, there is a tradeoff between the decision to pursue max-benefit and the feasibility of obtaining the higher amount of storage. It should also be noted, however, that the basin is at the limit of shift capacity for export, and expansion of recharge to achieve greater storage is costly. Further, the PEIR only considered an additional 250,000 acre-feet of storage.

their forecast terminates.[6] This analysis assumes that nominal electricity prices are constant.

Combining this information, increased pump lift costs have a present value of $14.9 million in the straightline depletion scenario. In the rapid pulldown scenario, re-operation has a larger impact on the present value of energy costs since the groundwater elevation is reduced to the same level but at an earlier date. Increased energy costs have a present value of $19.4 million in this scenario. Both calculations include increased energy costs in the new basin steady state achieved after 2030.

5. Results

Table 1 summarizes the results of the economic analysis. The figures in the table are the net benefits resulting from access to the Chino Basin aquifer under the alternative management and price scenarios described in the previous section. In all cases, basin re-operation results in aggregate net benefits. However, there are significant differences in net benefits depending on the realization of future water prices and the use of Santa Ana River inflows induced by reducing the stock of groundwater. The rapidity with which basin re-operation is implemented matters less.

When Santa Ana River inflow is allocated to desalter replenishment and overdraft occurs in constant annual amounts to 2030, basin re-operation results in gains of between $283.1 and $391.4 million in present value terms, depending on the growth of water prices and how the replenishment credit is used over time. These gains result from the ability to use recycled water for a fraction of recharge if hydraulic control is achieved, the value of new yield, and the value of the forgiven desalter replenishment.[7]

Since new yield is reliable, in any case more reliable than a supply of replenishment water, allocating it to desalter replenishment would seem to be inefficient. The Tier 2 rate is well above the price of replenishment water, which is a weighted average of the MWD replenishment rate and the price of recycled water. When Santa Ana River inflows are decoupled from replenishment obligations, the gains from straightline basin re-operation are between $341.9 and $438.8 million.

There is a small increase in the net benefits of basin re-operation when the most rapid overdraft strategy is implemented. Several factors explain this result. First, in the most rapid depletion scenario, the 30,000 acre-foot constraint on annual recycling recharge binds more frequently. Accordingly, less recycled water is recharged over the study

---

[6] http://www.energy.ca.gov/electricity/rates_iou_vs_muni_nominal/medium_commercial.html; http://www.energy.ca.gov/electricity/rates_iou_vs_muni_nominal/agricultural.html

[7] Another potential source of loss is the option value of the water taken from the groundwater stock. That is, water used to avoid desalter replenishment is water that is not available in the event of a major disruption in surface water supplies to the region. Given the difficulty of describing and quantifying these future states of nature, option values have not been calculated. However, conversations with Watermaster staff indicate that dewatering will not result in any meaningful loss of operational flexibility since the percentage depletion of the aquifer envisioned through re-operation is relatively small.

period under this scenario. Second, while the most rapid depletion strategy delays replenishment, it also hastens the date at which a large replenishment obligation occurs once the desalter replenishment forgiveness of 400,000 acre-feet is exhausted.[8] Given the relatively low real discount rate used in this study (i.e., the nominal discount rate minus the rate of growth of water prices), it is not surprising that dynamic factors such as this do not have a large effect on net benefits.

[8] This study has not considered the capital and operating costs of expanding recharge capacity. Allocating Santa Ana River inflows to desalter replenishment delays the date at which capacity is exceeded, as does the most rapid depletion strategy.

Table 1: Net Benefits of Hydraulic Control, Basin Re-Operation and Desalter Production

(Figures in millions of 2006 dollars)

Gain Over Baseline: SAR Inflow Allocated to Desalter Replenishment

	High Rate	*Low Rate*
Straightline	388.6	283.1
Most Rapid	391.4	288.4

Gain Over Baseline: SAR Inflow Unallocated

	High Rate	*Low Rate*
Straightline	436.2	341.9
Most Rapid	438.8	347.7

Source: Calculated.

Table 2: Production, Operating Yield and Stormwater Recharge

Year	*Total Production*	*Chino Desalter Production*	*Operating Yield*	*New Stormwater Recharge*
2006	223,505	30,019	145,000	12,000
2007	230,566	31,923	145,000	12,000
2008	237,634	33,827	145,000	12,000
2009	244,702	35,731	145,000	12,000
2010	251,874	37,748	145,000	12,000
2011	251,768	38,980	145,000	12,000
2012	251,661	40,212	145,000	12,000
2013	251,551	41,445	145,000	12,000
2014	251,557	42,789	145,000	12,000
2015	250,216	42,789	145,000	12,000
2016	250,427	42,789	145,000	12,000
2017	250,640	42,789	145,000	12,000
2018	250,851	42,789	140,000	12,000
2019	251,060	42,789	140,000	12,000
2020	251,270	42,789	140,000	12,000
2021	254,049	42,789	140,000	12,000
2022	256,827	42,789	140,000	12,000
2023	259,605	42,789	140,000	12,000
2024	262,384	42,789	140,000	12,000
2025	265,163	42,789	140,000	12,000
2026	266,133	42,789	140,000	12,000
2027	267,104	42,789	140,000	12,000
2028	268,074	42,789	140,000	12,000
2029	269,044	42,789	140,000	12,000
2030	270,014	42,789	140,000	12,000

Source: Wildermuth Environmental.

Table 3: Replenishment Obligations and Sources – No Basin Re-Operation

Year	*Normal Production Replenishment Obligation*	*Chino Desalter Replenishment Obligation*	*MWD Replenishment*	*Recycling Replenishment*
2006	36,487	30,019	66,505	0
2007	41,643	31,923	73,566	0
2008	46,806	33,827	80,634	0
2009	51,970	35,731	87,702	0
2010	57,126	37,748	94,874	0
2011	55,788	38,980	94,768	0
2012	54,448	40,212	94,661	0
2013	53,107	41,445	94,551	0
2014	51,768	42,789	94,557	0
2015	50,427	42,789	93,216	0
2016	50,638	42,789	93,427	0
2017	50,851	42,789	93,640	0
2018	56,062	42,789	98,851	0
2019	56,271	42,789	99,060	0
2020	56,482	42,789	99,270	0
2021	59,260	42,789	102,049	0
2022	62,038	42,789	104,827	0
2023	64,816	42,789	107,605	0
2024	67,595	42,789	110,384	0
2025	70,374	42,789	113,163	0
2026	71,344	42,789	114,133	0
2027	72,315	42,789	115,104	0
2028	73,285	42,789	116,074	0
2029	74,255	42,789	117,044	0
2030	75,225	42,789	118,014	0

Source: Calculated.

Normal Production Replenishment Obligation = Total Production – Desalter Production – Operating Yield – New Stormwater Recharge

Desalter Replenishment Obligation = Desalter Production

Table 4: Overdraft and SAR Inflow – Straightline Depletion Scenario

Year	*Annual Overdraft*	*Cumulative Overdraft*	*SAR Inflow*
2006	16,000	16,000	9,900
2007	16,000	32,000	9,900
2008	16,000	48,000	9,900
2009	16,000	64,000	9,900
2010	16,000	80,000	9,900
2011	16,000	96,000	9,900
2012	16,000	112,000	9,900
2013	16,000	128,000	9,900
2014	16,000	144,000	9,900
2015	16,000	160,000	9,900
2016	16,000	176,000	9,900
2017	16,000	192,000	9,900
2018	16,000	208,000	9,900
2019	16,000	224,000	9,900
2020	16,000	240,000	9,900
2021	16,000	256,000	9,900
2022	16,000	272,000	9,900
2023	16,000	288,000	9,900
2024	16,000	304,000	9,900
2025	16,000	320,000	9,900
2026	16,000	336,000	9,900
2027	16,000	352,000	9,900
2028	16,000	368,000	9,900
2029	16,000	384,000	9,900
2030	16,000	400,000	9,900

Sources: Annual and Cumulative Overdraft: Assumed; SAR Inflow, Wildermuth Environmental.

Table 5: Replenishment Obligations and Sources – Straightline Depletion Scenario with SAR Inflow Allocated to Desalter Replenishment

Year	*Normal Production Replenishment Obligation*	*Chino Desalter Replenishment Obligation*	*MWD Replenishment*	*Recycling Replenishment*
2006	36,487	4,119	28,424	12,182
2007	41,643	6,023	33,366	14,300
2008	46,806	7,927	38,314	16,420
2009	51,970	9,831	43,261	18,541
2010	57,126	11,848	48,282	20,692
2011	55,788	13,080	48,208	20,660
2012	54,448	14,312	48,133	20,628
2013	53,107	15,545	48,056	20,595
2014	51,768	16,889	48,060	20,597
2015	50,427	16,889	47,121	20,195
2016	50,638	16,889	47,269	20,258
2017	50,851	16,889	47,418	20,322
2018	56,062	16,889	51,065	21,885
2019	56,271	16,889	51,212	21,948
2020	56,482	16,889	51,359	22,011
2021	59,260	16,889	53,304	22,845
2022	62,038	16,889	55,249	23,678
2023	64,816	16,889	57,194	24,512
2024	67,595	16,889	59,139	25,345
2025	70,374	16,889	61,084	26,179
2026	71,344	16,889	61,763	26,470
2027	72,315	16,889	62,443	26,761
2028	73,285	16,889	63,121	27,052
2029	74,255	16,889	63,801	27,343
2030	75,225	16,889	64,480	27,634

Source: Calculated.

Normal Production Replenishment Obligation = Total Production – Desalter Production – Operating Yield – New Stormwater Recharge

Desalter Replenishment Obligation = Desalter Production – Annual Overdraft – SAR Inflow

Recycling Replenishment = min[0.3*(Normal Production Replenishment Obligation + Desalter Replenishment Obligation), 30,000]

MWD Replenishment = Normal Production Replenishment Obligation + Desalter Replenishment Obligation - Recycling Replenishment

Table 6: Replenishment Obligations and Sources – Straightline Depletion Scenario with SAR Inflow Unllocated

Year	*Total Replenishment Obligation*	*MWD Replenishment*	*Recycling Replenishment*
2006	50,505	35,354	15,152
2007	57,566	40,296	17,270
2008	64,634	45,244	19,390
2009	71,702	50,191	21,511
2010	78,874	55,212	23,662
2011	78,768	55,138	23,630
2012	78,661	55,063	23,598
2013	78,551	54,986	23,565
2014	78,557	54,990	23,567
2015	77,216	54,051	23,165
2016	77,427	54,199	23,228
2017	77,640	54,348	23,292
2018	82,851	57,995	24,855
2019	83,060	58,142	24,918
2020	83,270	58,289	24,981
2021	86,049	60,234	25,815
2022	88,827	62,179	26,648
2023	91,605	64,124	27,482
2024	94,384	66,069	28,315
2025	97,163	68,014	29,149
2026	98,133	68,693	29,440
2027	99,104	69,373	29,731
2028	100,074	70,074	30,000
2029	101,044	71,044	30,000
2030	102,014	72,014	30,000

Source: Calculated.

Total Replenishment Obligation = Total Production – Operating Yield – Annual Overdraft – New Stormwater Recharge

Recycling Replenishment = min[0.3*Total Replenishment Obligation, 30,000]

MWD Replenishment = Total Replenishment Obligation - Recycling Replenishment

Table 7: Overdraft and SAR Inflow – Most Rapid Depletion Scenario

Year	*Annual Overdraft*	*Cumulative Overdraft*	*SAR Inflow*
2006	20,119	20,119	9,900
2007	22,023	42,141	9,900
2008	23,927	66,069	9,900
2009	25,831	91,900	9,900
2010	27,848	119,748	9,900
2011	29,080	148,828	9,900
2012	30,312	179,141	9,900
2013	31,545	210,685	9,900
2014	32,889	243,574	9,900
2015	32,889	276,463	9,900
2016	32,889	309,352	9,900
2017	32,889	342,241	9,900
2018	32,889	375,130	9,900
2019	24,870	400,000	9,900
2020	0	400,000	12,500
2021	0	400,000	12,500
2022	0	400,000	12,500
2023	0	400,000	12,500
2024	0	400,000	12,500
2025	0	400,000	12,500
2026	0	400,000	12,500
2027	0	400,000	12,500
2028	0	400,000	12,500
2029	0	400,000	12,500
2030	0	400,000	12,500

Sources: Annual and Cumulative Overdraft: Assumed; SAR Inflow: Wildermuth Environmental.

Table 8: Replenishment Obligations and Sources – Most Rapid Depletion Scenario with SAR Inflow Allocated to Desalter Replenishment

Year	*Normal Production Replenishment Obligation*	*Chino Desalter Replenishment Obligation*	*MWD Replenishment*	*Recycling Replenishment*
2006	36,487	0	25,541	10,946
2007	41,643	0	29,150	12,493
2008	46,806	0	32,764	14,042
2009	51,970	0	36,379	15,591
2010	57,126	0	39,988	17,138
2011	55,788	0	39,051	16,736
2012	54,448	0	38,114	16,335
2013	53,107	0	37,175	15,932
2014	51,768	0	36,238	15,530
2015	50,427	0	35,299	15,128
2016	50,638	0	35,447	15,191
2017	50,851	0	35,596	15,255
2018	56,062	0	39,243	16,819
2019	56,271	8,019	45,003	19,287
2020	56,482	30,289	60,739	26,031
2021	59,260	30,289	62,684	26,865
2022	62,038	30,289	64,629	27,698
2023	64,816	30,289	66,574	28,532
2024	67,595	30,289	68,519	29,365
2025	70,374	30,289	70,663	30,000
2026	71,344	30,289	71,633	30,000
2027	72,315	30,289	72,604	30,000
2028	73,285	30,289	73,574	30,000
2029	74,255	30,289	74,544	30,000
2030	75,225	30,289	75,514	30,000

Source: Calculated.

Normal Production Replenishment Obligation = Total Production – Desalter Production – Operating Yield – New Stormwater Recharge

Desalter Replenishment Obligation = Desalter Production – Annual Overdraft – SAR Inflow

Recycling Replenishment = min[0.3*(Normal Production Replenishment Obligation + Desalter Replenishment Obligation), 30,000]

MWD Replenishment = Normal Production Replenishment Obligation + Desalter Replenishment Obligation - Recycling Replenishment

Table 9: Replenishment Obligations and Sources – Most Rapid Depletion Scenario with SAR Inflow Unllocated

Year	*Total Replenishment Obligation*	*MWD Replenishment*	*Recycling Replenishment*
2006	46,387	32,471	13,916
2007	51,543	36,080	15,463
2008	56,706	39,694	17,012
2009	61,870	43,309	18,561
2010	67,026	46,918	20,108
2011	65,688	45,981	19,706
2012	64,348	45,044	19,305
2013	63,007	44,105	18,902
2014	61,668	43,168	18,500
2015	60,327	42,229	18,098
2016	60,538	42,377	18,161
2017	60,751	42,526	18,225
2018	65,962	46,173	19,789
2019	74,190	51,933	22,257
2020	99,270	69,489	29,781
2021	102,049	72,049	30,000
2022	104,827	74,827	30,000
2023	107,605	77,605	30,000
2024	110,384	80,384	30,000
2025	113,163	83,163	30,000
2026	114,133	84,133	30,000
2027	115,104	85,104	30,000
2028	116,074	86,074	30,000
2029	117,044	87,044	30,000
2030	118,014	88,014	30,000

Source: Calculated.

Total Replenishment Obligation = Total Production – Operating Yield – Annual Overdraft – New Stormwater Recharge

Recycling Replenishment = min[0.3*Total Replenishment Obligation, 30,000]

MWD Replenishment = Total Replenishment Obligation - Recycling Replenishment

Table 10: Prices – High Price Scenario

Year	*Tier 2 Price*	*Replenishment Price*	*Recycling Price*
2006	427	238	69
2007	427	238	72
2008	459	275	75
2009	473	297	79
2010	486	314	82
2011	497	331	86
2012	519	346	90
2013	543	361	94
2014	567	378	98
2015	593	395	103
2016	619	412	107
2017	647	431	112
2018	676	450	117
2019	707	471	122
2020	739	492	128
2021	772	514	134
2022	807	537	140
2023	843	561	146
2024	881	587	152
2025	920	613	159
2026	962	641	166
2027	1,005	669	174
2028	1,050	700	182
2029	1,098	731	190
2030	1,147	764	198

Source: Metropolitan Water District of Southern California.

Table 11: Prices – Low Price Scenario

Year	*Tier 2 Price*	*Replenishment Price*	*Recycling Price*
2006	427	238	69
2007	427	238	71
2008	450	261	73
2009	457	268	75
2010	463	282	78
2011	477	300	80
2012	491	309	82
2013	506	318	85
2014	521	328	87
2015	537	338	90
2016	553	348	93
2017	570	358	96
2018	587	369	98
2019	604	380	101
2020	622	391	104
2021	641	403	107
2022	660	415	111
2023	680	428	114
2024	700	441	117
2025	722	454	121
2026	743	467	125
2027	765	481	128
2028	788	496	132
2029	812	511	136
2030	836	526	140

Source: Metropolitan Water District of Southern California.

Table 12: Expected Value of Reduced Storage Losses

Program Size	*Losses*	*Present Value - High Rate*	*Present Value - Low Rate*
300,000	80,175	18,647,350	15,290,827
400,000	106,900	24,863,133	20,387,769
500,000	133,626	31,079,149	25,484,903

Source: Wildermuth Environmental.

Attachment C

Report on the Distribution of Benefits to Basin Agencies from the Major Program Elements Encompassed by the Peace Agreement and Non-Binding Term Sheet

Prepared by:
David L. Sunding, Ph.D.
Berkeley Economic Consulting, Inc.
2550 Ninth Street, Suite 102
Berkeley, CA 94710

October 17, 2007

1. Introduction and Summary of Findings

This report measures the costs and benefits to various Chino Basin agencies of the program elements encompassed by the Peace I and Peace II Agreements. Both agreements are considered relative to a baseline state of the world existing after the Judgment but prior to the Peace Agreement. The analysis examines net returns to the ten largest agencies that hold groundwater rights in the Basin over the time period 2007 to 2030. Together, these agencies account for over 91 percent of Basin safe operating yield.

Overall, the study shows that the two agreements produce substantial net benefits to Chino Basin agencies – over $904 million in present value terms. The provisions of the Peace II Agreement are especially valuable, as they account for $723 million (80 percent) of the total net benefit to the Basin agencies studied. Through the attainment of hydraulic control, the program elements in Peace II Agreement include the introduction of large quantities of recycled water in the Basin, which lessens the need to procure other supplies to meet growing demand for water. With respect to the distribution of net benefits across agencies, shown in the summary tables below, the main outcome is that all agencies benefit from the agreements, although the magnitude of the net benefit varies considerably among agencies.

	Total Net Benefit (1000s of 2007$)		
	Peace I vs. Baseline	*Peace II vs. Peace I*	*Peace II vs. Baseline*
City of Chino	$20,294	$75,671	$95,966
City of Chino Hills	$12,217	$61,320	$73,537
City of Ontario	$42,547	$189,724	$232,271
City of Upland	$9,442	$34,644	$44,086
Cucamonga Valley Water District	$60,667	$217,462	$278,128
Fontana Union Water Co.	$4,839	$25,429	$30,268
Monte Vista Water District	$7,025	$33,455	$40,480
San Antonio Water Company	$1,141	$5,995	$7,136
Jurupa CSD	$15,772	$19,482	$35,254
City of Pomona	$8,189	$59,348	$67,537
Total	**$182,133**	**$722,530**	**$904,663**

	Net Benefit per Acre-Foot (2007$)		
	Peace I vs. Baseline	*Peace II vs. Peace I*	*Peace II vs. Baseline*
City of Chino	$31.30	$116.70	$148.00
City of Chino Hills	$20.60	$103.38	$123.98
City of Ontario	$24.20	$107.91	$132.11
City of Upland	$17.46	$64.07	$81.54
Cucamonga Valley Water District	$32.92	$118.01	$150.93
Monte Vista Water District	$20.13	$95.88	$116.01
Jurupa CSD	$17.86	$22.06	$39.92
City of Pomona	$11.10	$80.47	$91.58
Overall Average	**$19.84**	**$78.69**	**$98.53**

In terms of total net benefit, two agencies, City of Ontario and Cucamonga Valley Water District, receive over half of all the net benefits resulting from the agreements. An important reason these agencies receive a large share of the net benefit from the agreements is due to their relative size: the two agencies combined account for approximately half of the consumer demand for Basin water.[1] Controlling for agency size on the basis of demand for Basin water, the net benefit resulting from the combined program elements in the Peace I and Peace II Agreements shows considerably less variation. The table above indicates that 7 of the 8 agencies with positive demand for Basin water receiving benefits ranging from $82 to $151 per acre –foot.[2]

2. Conceptual Framework

The model of groundwater value used in this report is standard in the academic literature and builds on the methodology used in the earlier aggregate study of Basin net benefits. The net benefits resulting from access to a groundwater resource are the gains from pumping (the demand for water) less the cost of extraction and conveyance, and a user cost component, which reflects the lost option value entailed by removing a unit of water from storage. The stream of annual net benefits is discounted back to current dollars using a discount factor predicated on the rate of interest, which is taken to be the current risk-free long-term rate of interest and is set at 4.5 percent per year.

Allocation of aggregate costs and benefits to individual agencies in the Basin is accomplished by a complex set of legal rules (e.g., shares of operating yield), cost-sharing arrangements that fund programs for Basin improvements through collective institutions, and market forces. The goal of this study is to measure net benefits to individual agencies under three scenarios: (i) a baseline case defined by the Judgment; (ii) a set of rules to operate the Basin and fund programs through collections as defined by the Peace Agreement; and (iii) an alternative set of rules that are

[1] Consumer demand for Basin water, which is met through some combination of Basin supply and water imports, is calculated for each agency as Urban Water Demand less available surface water and other groundwater supplies. Over the 2007-2030 period of study, the City of Ontario and Cucamonga Valley Water District are projected to meet consumer demand of 3.4 million acre-feet out of 6.9 million acre-feet (49 percent) of total consumer demand for Basin water.

[2] Fontana Union Water Company and San Antonio Water Company are not included in these calculations, because the available surface water and other groundwater supplies for these agencies exceed their Urban Water Demand.

designed to achieve hydraulic control and are defined in Peace II Agreement (as represented in the Non-Binding Term Sheet dated May 23, 2006).

To understand the allocation of benefits among individual agencies in the appropriative pool most clearly, consider for the moment the case in which the appropriative pool comprises 100 percent of the Basin water. Figure 1 depicts the aggregate supply (S) and demand (D) schedules for this Basin. Aggregate demand is total water demand in the Basin, and the supply curve is a step function, ordered from the least expensive uses of water to the most expensive uses of water.[3] Many of the effects modeled in this study amount to changes in agencies' cost of meeting water demand. An arrangement or cost-sharing rule that reduces an agency's cost of service provides a net benefit to that agency and its ratepayers.

Figure 1. Conceptual Model: Aggregate Demand and Supply

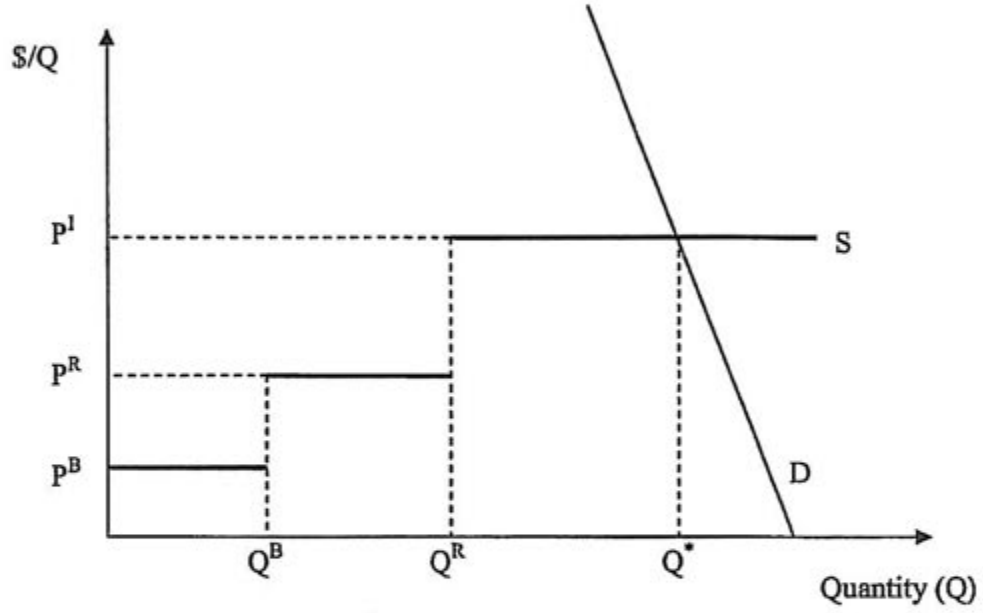

The first step of the supply curve, which represents the least expensive water source, is groundwater pumped directly from the Basin. The extent of groundwater pumping in the Basin is limited by the steady-state ("safe") yield, which is represented in the figure by quantity Q^B. The cost per unit of Basin water is denoted by the (implicit) price P^B, which includes lift costs, conveyance costs, and user cost. The second step of the supply curve represents replenishment water. After the safe yield of the Basin is exhausted, additional groundwater pumping can occur provided that replenishment water is purchased to recharge the Basin. The effective capacity of the Basin is the sum of Basin safe yield and Basin recharge capacity, denoted by the quantity Q^R in the figure. (The recharge capacity of the Basin is given by the difference Q^R - Q^B.)

[3] In practice, the water supply function has multiple steps, with each step representing the various pumping and conveyance costs of a sequence of wells, and, for this reason, aggregate supply conditions are often approximated by an upwards-sloping, continuous supply function; however, the essential points of the model can be made more clearly by grouping water costs into common categories represented by each of the three steps.

Replenishment water is supplied to the Basin through replenishment water imports at the MWD replenishment rate, which is denoted in the figure by P^R. The third step in the supply function, the most-expensive source of water, is imported water for direct (consumptive) use. Imported water for direct use is available to agencies in the Basin at a price denoted by P^I, which reflects the cost of procuring new water supplies from outside the Basin. The cost of developing reliable sources of water outside the Basin may differ across agencies in practice according to the options available to each agency in developing outside water sources. The outside option for each agency in the present study, unless stated otherwise, is taken to have a cost equal to the Tier 2 MWD rate for untreated water.

The equilibrium quantity of water consumed is given by the intersection of supply and demand, which occurs at the quantity Q^* and the price P^I. The key to characterizing the distribution of benefits from policies that increase the effective yield from the Basin, either by expanding Basin safe yield or by augmenting Basin recharge capacity, is the understanding that economic values, as captured by prices, are realized on the margin of water use where supply intersects with demand (the third step in the figure). Gains from management of the Basin are created by replacing units of water at the third and most-expensive step of the supply function with less expensive sources of water. Because individual supplies are added together to get aggregate supply, the distribution of market benefits to individual agencies in response to Basin improvements depends on the composition of water use by each agency across each of the steps of supply, in effect where each agency is "located" on the supply schedule. In general, agencies who meet their meet urban water demand to a greater degree with marginal units of water (i.e., imported water for direct use) acquire a larger share of the benefits from Basin improvements than agencies that are less represented on this "extensive margin" of supply.[4]

Consider a policy that increases the recharge capacity of the Basin. In general, such an effort has two effects that, taken together, can alter the net benefits received by water agencies: (i) increasing the Basin recharge capacity involves a fixed cost component that must be allocated among agencies according to some cooperative, cost-sharing rule; and (ii) increasing the Basin recharge capacity allows for greater use of replenishment water that can displace expensive Tier 2 water on the margin. The distribution of net benefits in the Basin is altered in cases where the market allocation of benefits from the increased use of replenishment water differs from the allocation of cost among individual agencies.

Figure 2 shows the gain from an increase in recharge capacity in the Basin. The increase in recharge capacity increases the effective yield in the Basin, which is depicted in the figure by the movement from Q_0^R to Q_1^R. The increased recharge capacity allows Basin agencies to incur additional replenishment obligations that displace $Q_1^R - Q_0^R$ units of imported water for direct use. The total producer benefit resulting from the increase in recharge capacity is represented by the shaded region in the figure, which sums the difference between the Tier 2 rate and replenishment rate for each additional unit of water that can be replenished.

[4] Generally, users disproportionately represented on the margin of supply represent agencies that incurred large increases in urban water demand subsequent to the assignment of safe operating yield and were forced to meet the increase in demand with relatively expensive sources of imported water.

Figure 2. Benefit of an Increase in Basin Recharge Capacity

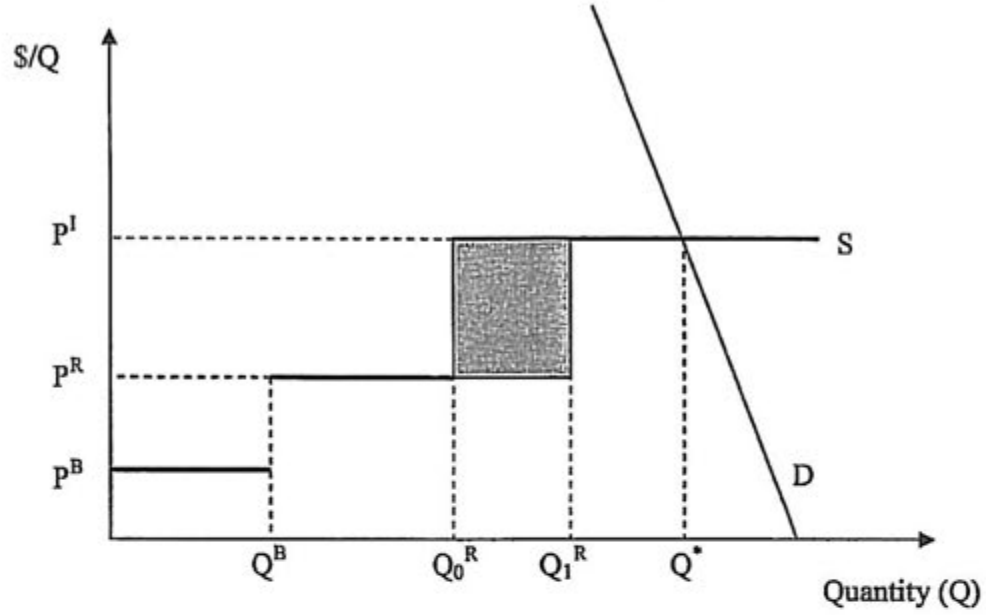

Among individual agencies in the Basin, the benefit of an increase in recharge capacity is distributed exclusively to agencies on the extensive margin of water supply. For this reason, the market return from an increase in recharge capacity can be distributed equally across agencies only in the case where the agencies have equal shares of the third step of water supply in the Basin. To illustrate this point, consider an agency that faces sufficiently small water demand relative to its share of Basin production rights that its urban water demand can be met each year entirely through the use of Basin safe yield. Such an agency would require the use of neither imported replenishment water nor imported water for direct use to meet its urban water demand, and would stand to receive no market benefit from participating in a cooperative policy designed to increase Basin recharge capacity. To the extent that cooperative assessments levied to recoup the cost of increasing Basin recharge capacity are based on relative share of operating yield, as opposed to being levied in proportion to the initial share of imported water deliveries for direct use across agencies, policies that increase Basin recharge capacity alter the distribution of net benefits.

Next, consider the benefit associated with an increase in Basin safe yield. Figure 3 shows the effect of an increase in Basin safe yield from Q_0^B to Q_1^B units. The increase in Basin safe yield extends the lowest step of the supply function and displaces $Q_1^B - Q_0^B$ units of replenishment water purchases. The value of the displaced replenishment water (net of the cost of Basin water) is shown by the cross-hatched region in the figure. The increase in Basin safe yield, in turn, increases the effective yield in the Basin (the sum of Basin yield and recharge capacity) from Q_0^R to Q_1^R, which is represented in the figure by a rightward shift in the replenishment step of supply. The increase in Basin safe yield therefore also displaces $Q_1^R - Q_0^R = Q_1^B - Q_0^B$ units of imported water on the extensive margin of supply, which provides an additional gain represented by the shaded region of the figure. The total market benefit to all agencies is represented by the sum of these two regions. The value of an increase in Basin safe yield is the difference between

the price of imported water for direct use and the procurement cost of Basin groundwater for each unit of additional water made available to Basin agencies.

Figure 3. Benefit of an Increase in Basin Safe Yield

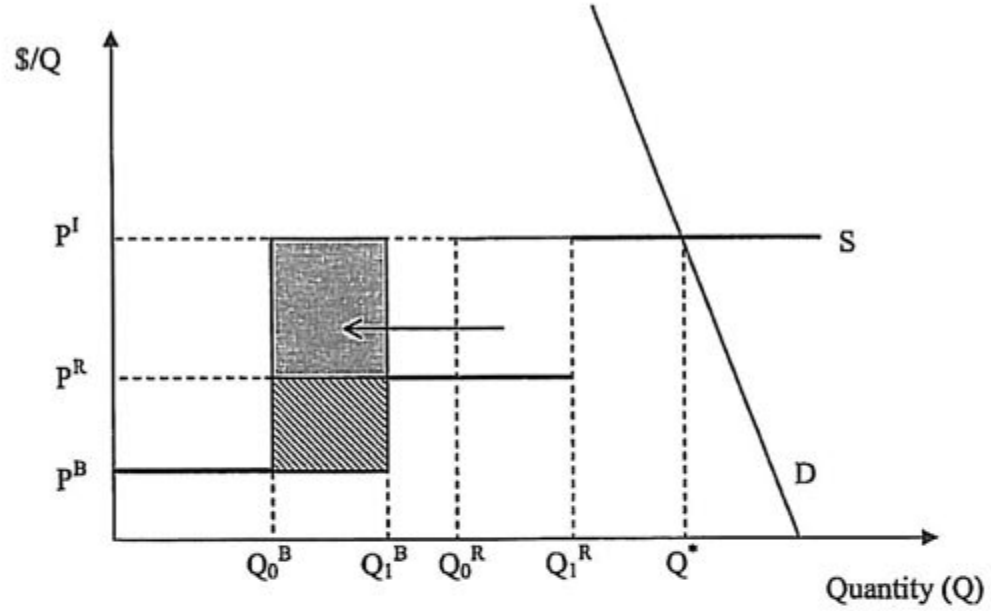

The economic value of an increase in safe yield conveys upward into market benefit across both steps of supply. For this reason, policies which lead an increase in Basin safe yield are not only more valuable to agencies in the Basin than an increase in recharge capacity, but the benefits are also distributed more equally. As in the case of an increase in replenishment capacity, the ultimate repository of market value for a one-unit increase in safe yield is a unit of displaced water on the extensive margin of supply; however, this displacement now occurs with Basin safe yield rather than through the use of imported replenishment water. To see how the market benefits of a policy that increases Basin safe yield are distributed to individual agencies, consider again an agency that meets its urban water demand each year entirely through the use of Basin safe yield without the need for replenishment water or imported water for direct use. Unlike the case of an increase in replenishment capacity, the increase in Basin safe yield provides each agency with physical water assets (e.g., according to its share of Basin safe yield) that can be sold to other agencies in the transfer market. The gain to this agency following the increase in Basin safe yield depends on the price it receives in the transfer market, for instance if the transfer price is equal to the replenishment rate (P^R) then the agency acquires a share of the benefits in the cross-hatched region of the figure in proportion to its share of Basin safe yield. The remaining benefit of each unit of water provided as the share of safe yield to this agency is acquired by the water purchaser in the transfer market.

In sum, agencies that initially meet their urban water demand with a relatively large share of imported water for direct use receive the largest share of the market benefit from a policy that increases Basin safe yield. These agencies receive the full market value ($P^I - P^B$) for each unit of water displaced through their allocated share of the increase in Basin safe yield. To the extent

that agencies with an initially large share of imported water purchases for direct use participate in the transfer market, these agencies also acquire the difference between the Tier 2 water price and the transfer price for each unit of water purchased from agencies that are under-represented on the extensive margin of supply. If the transfer price of water is taken to be equal to the replenishment rate (P^R), then the market benefit represented by the shaded region of Figure 3 is divided among agencies according to their relative share of production on the extensive margin of supply, while the market benefit represented by the cross-hatched region of Figure 3 is divided among agencies according to their relative share of Basin safe yield.[5] Policies that expand Basin safe yield lead to redistributive effects on the net benefits received by individual agencies whenever the allocation of costs in the cooperative arrangement differ from this distribution of benefits provided in the market.

The above framework for calculating the distribution of net benefits from various program elements is applied to the Chino Basin as follows. First, the water yield in the Basin is calibrated to the relevant quantity supplied by the appropriative pool by netting out production by the overlying rights-holders from the Basin safe yield. This is essentially the distinction made in practice between "safe yield" and "safe operating yield" in the Basin. As it pertains to the calculation of net benefits to agencies with appropriative rights, policies that increase the Basin yield (as in Figure 3) now refer both to policies that directly increase Basin safe yield as well as to policies that redistribute the existing safe yield from overlying right-holders to members of the appropriative pool, for instance through net agricultural transfer.

Second, as defined by the framework above, net benefits are calculated for individual agencies according to calculations on the avoided cost of Tier 2 water purchases provided by program elements in the Peace I and Peace II agreements, respectively, relative to the baseline scenario.[6] Considering the change in cost from the introduction of new program elements suppresses the need to explicitly calculate components of cost that are common to the baseline, Peace I, and Peace II scenarios.

Third, the analysis abstracts from seasonal and annual cycles in water availability by considering expected values where possible. Seasonal cycles are smoothed in all scenarios by using annual data on demand and supply conditions facing agencies. Annual cycles are smoothed in all scenarios by treating each year as an average weather occurrence represented by the expectation that each 10-year future horizon in the model is comprised of 7 "wet" years, in which replenishment water is available to agencies in the Basin, and 3 "dry" years, in which replenishment water is not available.[7] Each year in the model thus has the interpretation of representing production decisions that are 30 percent dry and 70 percent wet. By smoothing annual production outcomes into an expected value framework, this implies that a replenishment

[5] This argument does not rely on the water transfer price being equal to the replenishment rate and applies to any water transfer pricing rule that divides the gains from exchange (defined here by the value $P^I - P^B$).

[6] An alternative scenario is also considered that denominates the avoided cost of imported water for direct use at the Tier 1 rate, which provides a bracketing condition on the range of outside options available to individual agencies for procuring reliable new sources of water at rates between the Tier 1 and Tier 2 MWD prices.

[7] The expected sequence of wet and dry years is based on the assumption that underlies program element 2 of the OBMP that "replenishment water is available 7 out of 10 years." (Implementation Plan: Optimal Basin Management Plan for the Chino Basin, p13: http://www.cbwm.org/docs/legaldocs/Implementation_Plan.pdf.)

water step exists in the supply function in each year of the study, but that the length of the step is treated as 70 percent of the recharge capacity in the Basin.

Fourth, the net benefit of policies that increase the safe operating yield of the appropriative pool is distributed among individual agencies, in part, through water exchanges between agencies in the transfer market. Water transfers are specified to exchange units of water between agencies that are not adequately represented on the extensive margin of supply to agencies which are more highly represented on this margin. Specifically, the water price in the transfer market is fixed at the prevailing MWD replenishment rate in each period to divide these rents from exchange.

Finally, the net benefit returned to each agency under Peace I and Peace II rules relative to the baseline scenario is computed by coupling the market distribution of benefits, as outlined by the framework here, with the distribution of cost implied by the rules encompassed by each agreement. These rules are defined in the following description of scenarios.

3. Common Components

Several components common to all scenarios frame the overall analysis.

3.1. Agencies Considered

Because of the detailed calculations required to divide the net benefit created by each scenario among individual agencies in the study, the study encompasses only the ten largest water-holding agencies in the Basin (the cities of Chino, Chino Hills, Ontario, Pomona, and Upland, Fontana Union Water Company, Monte Vista Water District, Cucamonga Valley Water District, Jurupa Community Services District, and San Antonio Water Company). These ten agencies account for 91.2 percent of the Basin-wide safe operating yield.

3.2. Smoothing Across Hydrologic Years

Because production is smoothed across years, the patterns of local storage and local supplemental storage are also smoothed for each agency. This abstracts from the actual series of puts and takes that rely on temporal adjustments in water storage by accounting for the expected local storage need of individual agencies. (Recall that each year is a representative hydrologic year characterized by expected conditions that are 70 percent wet and 30 percent dry.) A single local storage account is constructed for each agency that combines local storage with local supplemental storage in all scenarios, and the local storage balance of each agency is adjusted each year to reflect the fact that replenishment water is available to meet replenishment obligations only 70 percent of the time.

For this reason, the annual amount held in storage for each agency is 3/7 ($3/7 = 10/7 - 1$) of the annual excess demand for water that cannot be met by the agency through the allocation of contemporaneous supply. The expected arrival time of a dry year in which replenishment water is not available is given by the mean of a Poisson process ($\mu = 10/3$), and the average holding time for a unit of water held in storage is half the expected arrival time of a dry year, which implies that the average annual amount of water held in local storage is 5/7 ($5/7 = 3/7*10/3*1/2$) of the annual excess demand for each agency that cannot be met through the allocation of contemporaneous water supply. In each year, the local storage account is reconciled with the storage balance in the previous year by adding the increment in local storage to the excess

demand for water for each agency. Local storage levels increase smoothly over time in the model for most agencies due to the projected increases in urban water demand.

3.3. Water Prices

Annual water prices and the discount factor that converts annual values into present value are common across all scenarios. The market rates used in 2007 are the current water rates listed by MWD ($427/AF for Tier 2 water, $238/AF for replenishment water), and a $13 surcharge is added to the replenishment rate to reflect the $251/AF charge currently paid by each agency for replenishment water procured through Watermaster. The price of water transactions in the transfer market is taken in each period to be the price of replenishment water.[8] The MWD rate forecast through 2012 is taken as the mean of the high- and low-rate forecasts provided by MWD over this horizon. Recycled water rates through 2011 are taken from IEUA projections provided in the 2007 IEUA Long-Run Plan of Finance, with a 25 percent non-member surcharge included for recycled water deliveries outside the IEUA service area (Jurupa Community Services District and the City of Pomona). The price of desalter water for urban supply is taken to be the price cap specified in section 7.6d of the Peace Agreement, which is $375 in 2007. All water rates outside the range of published forecasts are assumed to increase at a rate of 4.5 percent per year. The discount factor is also taken to be 4.5 percent.

3.4. Demand

Demand for Basin water for each agency is identical across all three scenarios. Agency-level demand for Basin water is calculated from data provided in the relevant 2005 Urban Water Management Plans (UWMP) by taking the projected demand (gross of conservation) compiled by each agency and converting this into a residual (Basin) demand component by netting out available supplies of surface water and other groundwater sources available to each agency.[9] In the case of Pomona, residual demand for Basin water is taken to be net of Puente and Spadra Basin recycled water, which implicitly assumes that this water would be available to Pomona irrespective of whether hydraulic control is attained in Chino Basin. Residual Basin water demand is linearized for each agency to recover values in the intervening years between the 5-year intervals reported in each UWMP. Residual demand for Fontana Union Water Co., which has rights but serves no subscribers, is zero in all scenarios, as is residual demand facing San Antonio Water Co., which has available surface water and other basin groundwater supply in excess of demand. The combined residual demand for the remaining agencies in the Basin is 215,996 AF in 2007 and increases over time with population growth projections to 337,246 AF in 2030. Among agencies with positive demand values, residual demand in 2007 ranges from a low of 12,753 AF for Monte Vista Water District to a high of 49,552 AF for the City of Ontario, and the residual water demand for the City of Ontario and Cucamonga Valley Water District over the entire horizon is about double the residual water demand of Pomona, 2-3 times greater than the City of Chino, City of Chino Hills, and Jurupa Community Services District, and 5-6

[8] The average water transaction price in the data provided in the Watermaster's 2006-2007 Assessment Packet is $177, which represents an approximate 30 percent discount below the current replenishment rate of $251. This observed price discount below the expected transfer price accords with the "wet year" transfer price that would arise in a representative hydrologic year that is 70 percent wet and 30 percent dry when the "dry year" transfer price is $422, a value bounded by the prevailing Tier 2 price of untreated water of $427.

[9] for IEUA members, these data are taken from the IEUA Urban Water Management Plan (2005), Table 2-7, and, for Jurupa Community Services District and the City of Pomona, these data are taken from the individual 2005 Urban Water Management Plans (2005) available on each agencies website.

times greater than the residual demand facing the City of Upland and Monte Vista Water District.

3.5. Desalter Production

Desalter production is treated as equal across all scenarios. Implicitly, this views the level and location of desalter activity to be determined by the requirements outlined by the Judgment.[10] An alternative approach would be to construct a baseline scenario in which agencies provide their own salt removal infrastructure. One difference between this alternative approach and the present one is that, under baseline conditions with individual desalting O&M costs would be roughly the same, whereas the capital costs of building desalter facilities would be larger by the amount of funding that became available in the Basin through grants made possible by the Peace Agreement.

The projected desalter water for urban supply sets a schedule of delivery to three agencies considered in the study (City of Chino, City of Chino Hills, and Jurupa). The desalter water for urban supply rises from 15,230 AF to 38,088 AF over the period 2007-2030 among agencies in the study, with the remaining desalter supply being delivered to the City of Norco and the Santa Ana River Water Company. Each unit of desalter water supply, including deliveries to the City of Norco and the Santa Ana River Water Company, creates a replenishment obligation for producers in the Basin, and this obligation is divided among agencies according to the various rules encompassed by each of the three scenarios considered (as described below).

3.6. Watermaster Assessments

Although the assessment fees levied by Watermaster differ across the scenarios according to the total cost of the program elements embodied in each scenario, the rules in which assessments are distributed across individual agencies are common to all scenarios. Specifically, appropriative pool assessments are based on each agency's calculated share of actual fiscal year production. Given that total production and the share of production by individual agencies encompasses only a subset of total Basin production (e.g., roughly 87 percent in 2007), this approach slightly over-estimates assessment costs in all scenarios by attributing 100 percent of the program cost to the ten agencies included in the study. Because the assessment costs used under the Peace I and Peace II scenarios include the baseline costs, as well as significant additional program costs, the over-allocation of assessment costs to individual agencies in the study provides a conservative estimate of the total benefit generated under Peace I and Peace II. The different components of the assessment costs were decomposed into program expenses from the 3-year assessment projections provided by Watermaster.[11] All cost components thereafter are assumed to increase at a rate of 4.5 percent.

---

[10] Projected desalter production is taken from IEUA's UWMP (2005, Table 3-10 and Table 7-1), and includes the desalter production of Chino I, Chino I expansion, Chino II, and Desalter 3. The overall level of desalter activity, which grows to an ultimate production level of 43,000 AF by year 2025, an amount slightly below the 50,457 AF desalter production level anticipated by 2020 in the OBMP: (Implementation Plan: Optimal Basin Management Plan for the Chino Basin, Table 3, p59: http://www.cbwm.org/docs/legaldocs/Implementation_Plan.pdf.)

[11] Personal correspondence with Watermaster staff (August 7, 2007).

4. Baseline Scenario

4.1. Basin Supply

In the baseline scenario, available Basin supply for each agency in each year is comprised of the agency's share of: (i) safe operating yield, (ii) projected desalter water for urban supply, and (iii) the net agricultural pool transfer. The safe operating yield is allocated to individual agencies based on the share of safe operating yield in the Basin defined by the Judgment.

The projected desalter water for urban supply is taken for the baseline case (as well as for the remaining scenarios) from projections available in the IEUA UWMP.[12] Desalter water for urban use is treated in the model both as a source of water supply in the Basin and as a replenishment obligation, where the replenishment obligation associated with each unit of desalter water supply is shared by agencies through the allocation of storage losses and replenishment assessments by Watermaster, which are calculated for the baseline case according to each agencies pro rata share of safe operating yield up to the available recharge capacity in the Basin and by in lieu recharge according to each agencies pro rata share of safe operating yield for any obligation above the available recharge capacity.

The net agricultural transfer to each agency in each year is calculated by taking a straight-line projection of land-use conversions between 2006 conditions reported in the 2006-2007 Watermaster Assessment Package, and assumed "full build-out conditions" in 2030 in which all acres in the agricultural pool eligible for conversion are converted.[13] For the baseline scenario, each converter is credited with 1.3 AF of Basin water for each acre converted, and the sum of water allocated to all land-use conversions and agricultural pool production in each year is deducted from the agricultural pool safe yield of 82,800 AF to get the net agricultural pool transfer to the appropriative pool in each year.[14] Among the ten largest members of the appropriative pool considered in the study, the net agricultural transfer increases from 46,265 AF to 71,377 AF over the 2007-2030 period, which accounts for approximately 92 percent of the total water transfer to the appropriative pool in each year.

Under baseline conditions, there is also an issue of timing of the agricultural pool transfer, with no early transfer of agricultural pool water being made to the appropriative pool prior to the Peace Agreement. Under the Judgment, the agricultural pool allocation was defined to be 414,000 AF in every 5 years. This implies a 4-year waiting period for the appropriative pool before any agricultural transfer takes place, followed by a large allocation of the cumulative agricultural pool under-production in year 5, and an annual stream of transfers thereafter based on a rolling horizon comprised of the previous 5 years agricultural pool under-production. In the

---

[12] IEUA Urban Water Management Plan (2005), Tables 3-10 and 7-1.

[13] Watermaster, Fiscal Year 2006-2007 Final Assessment Package, Land Use Conversion Summary (p10): http://www.cbwm.org/docs/financdocs/Assessment%20Package%20FY%202006-2007%20Final.pdf. Values after the conversion of all agricultural land eligible for conversion are based on Watermaster calculations (personal communication with Watermaster staff, July 12, 2007).

[14] Under baseline conditions, 1.3 AF of water is allocated to the appropriative pool based on share of safe operating yield in the baseline scenario. This value is not parsed out from the net agricultural transfer that occurs each year, because all water transfers between the agricultural pool and the appropriative pool are based on shares of safe operating yield and an amount greater than 1.3 AF per acre is transferred from the agricultural pool to the appropriative pool in each year.

baseline scenario, the agricultural pool transfer is calculated on an annual basis and timing lags in the delivery of water are suppressed. Differences in the actual timing of the water have no implications for the baseline values in the study, because the rate of water price inflation is taken to be equal to the discount rate, so that delays in water delivery have no implications for the present value calculation.

The sum of these components in each year gives Basin supply for each agency. This represents the first step of the supply function depicted in Figure 1.[15] In total, Basin supply among the ten largest agencies considered in the study rises from 116,044 AF to 164,014 AF over the 2007-2030 period, with the increase in supply generated through land use conversions and increased desalter water for urban supply. (This latter source of water supply is matched by an associated increase in the desalter replenishment obligation, as discussed below.)

4.2. Import Demand

Import demand for each agency in the Basin represents the amount of demand facing each agency that cannot be met with available Basin supplies (including supplies which can be purchased from other Basin agencies in the transfer market). Import demand for each agency, which must be met through some combination of replenishment water purchases and imported water purchases for direct use, is the sum of three components: (i) excess demand for water; (ii) storage account adjustments; and (iii) water transfers.

Excess demand for each agency in the Basin is calculated as residual demand less the available Basin supply. Excess demand for water is negative in each year for Fontana Union Water Co. and San Antonio Water Co., which implies that these agencies are water suppliers in the transfer market. In each year, approximately 70 percent of the excess demand for water in the Basin is derived from Cucamonga Valley Water District and the City of Ontario, which indicates a large water demand for Basin water among these agencies relative to their share of Basin supply.

In practice, the demand for water in dry years is met, in part, by smoothing the additional water supplies available in wet years across time through local storage. As discussed above, the model considers each year to be a representative year (30 percent dry and 70 percent wet), so that the annual amount of water held in local storage by each agency is 5/7 of the annual excess demand that cannot be met with contemporaneous supply. Local storage in the model, which represents the combined total held in local storage and local supplemental storage accounts in a representative year, increases over the period 2007-2030 from 83,706 AF to 141,565 AF among agencies in the study, where the growth in local storage over the period occurs in proportion to the 70 percent increase in excess demand for Basin water as population increases in the region.

Local storage accounts are not constructed for Fontana Union Water Co. and San Antonio Water Co., because these agencies have excess supply of water in each year above what is necessary to meet their urban water demands. In practice, these agencies may hold water in local storage to arbitrage expected differences in transfer prices between wet and dry years, but such arbitrage

[15] Because desalter water is not a unique source of supply, an accounting adjustment is made later to back out desalter water supplies from Basin supply by creating an off-setting replenishment obligation for each unit of desalter water used for urban supply.

opportunities are suppressed in the model, because variations in annual water availability are smoothed in the model to a basis of a representative hydrologic year.

In each year, a storage account adjustment is made for each agency by adding the incremental growth in local storage from the previous year's value to the excess demand for water. The amount of water held in local storage adjusts upward each year to meet the growth in excess demand, and this need for added storage to smooth increasing volumes of water between wet and dry years is deducted from contemporaneous water supply.

After storage account adjustments are made in each year, individual excess demand and individual excess supply conditions clear each year in the transfer market. Excess supply to be cleared in the transfer market in each year is comprised of sales by Fontana Union Water Co. and San Antonio Water Co., and, to a lesser extent, by Jurupa Community Services District beginning in 2021. Jurupa CSD becomes a net supplier of water in the transfer market due to the relatively large purchases of desalter water for urban supply in the data provided in IEUA's UWMP (2005). Water transfers are allocated from these suppliers to individual agencies with positive demand for transfer water in proportion to each agency's share of excess demand relative to total excess demand for water in the Basin. The total amount of water transacted in the Basin rises from 12,677 AF to 20,401 AF over the 2007-2030 period, and the largest buyers of transfer water in each period are Cucamonga Valley Water District and the City of Ontario.

4.3. Water Imports

Water is imported into the Basin to meet the sum of import demand for direct use and desalter replenishment requirements. Imported water is taken as replenishment water in each period up to the limit on recharge capacity in the Basin (i.e., the second step of the water supply relationship in Figure 1), and the residual quantity of imported water that cannot be met with replenishment water is taken as Tier 2 water imports. Under baseline conditions, the recharge capacity of the Basin is taken to be 29,000 AF per year, which represents the available spreading facilities discussed as pre-existing facilities in program element 2 of the OBMP.[16] Given the smoothing of production into the basis of representative hydrologic years, this implies that baseline conditions in the Basin can accommodate 20,300 AF of recharge per year (0.7*29,000 AF). This recharge capacity defines the limit to which imported water in the Basin can be taken at the lower MWD replenishment rate.[17]

Imported replenishment water in the Basin must first be taken to meet the replenishment obligation of the desalters. The desalter replenishment obligation under baseline conditions is desalter production for urban supply less a 2 percent storage loss component deducted from individual local storage accounts.[18] Under baseline conditions, the desalter replenishment obligation (net of the storage loss allocation) begins at 13,556 AF in 2007 and grows to 40,169 AF per year in 2030. In the year 2010, the desalter replenishment obligation rises to 22,604 AF,

---

[16] Implementation Plan: Optimal Basin Management Plan for the Chino Basin, p13: http://www.cbwm.org/docs/legaldocs/Implementation_Plan.pdf.

[17] The increase in Basin recharge capacity, as described in the Recharge Master Plan (WEI, Black and Veatch 2001: http://www.cbwm.org/docs/rechdocs/rechmastplanphase2rep/chapters/pdf/) is a major program element considered in the Peace Agreement, both in terms of benefit and cost.

[18] Personal correspondence with Watermaster staff.

an amount in excess of the 20,300 AF recharge capacity of the Basin in the baseline scenario, and the replenishment obligation remains above the recharge capacity for the remainder of the time horizon. Over the period 2007-2009, the amount of recharge capacity in excess of the desalter replenishment requirement (e.g., 20,300 – 13,556 = 6,744 AF in 2007) is allocated to individual agencies in proportion to each agency's share of imported water demand relative to total imported water demand in the Basin. Over the period 2010-2030, the desalter replenishment obligation exceeds the recharge capacity of the Basin, and the remaining desalter replenishment obligation above 20,300 AF is met through in lieu production by individual agencies in the Basin. In the baseline scenario, the desalter replenishment obligation, both the portion met with replenishment water purchases and the portion taken as in lieu production, is met by individual agencies according to each agency's pro rata share of safe operating yield.[19]

Aggregate supply and demand are cleared each year on the third step of supply by reconciling effective Basin water supply (Basin supply plus Basin recharge) with import demand through purchases of Tier 2 water from MWD. Tier 2 MWD water purchases are allocated to individual agencies based on the share of each agency's imported water demand relative to total imported water demand in the Basin. Under baseline conditions, the total purchases of Tier 2 water among agencies in the Basin rises from 97,766 AF in 2007 to 200,097 AF in 2030, with the combined purchase share of Cucamonga Valley Water District and the City of Ontario—the two largest purchasers of imported water—representing between 62 percent and 73 percent of total Tier 2 water purchases in each year.

4.4. Water Procurement Costs

The total cost of water procurement to individual agencies is the sum of five components: (i) Tier 2 water purchases; (ii) transfer water purchases; (iii) desalter water purchases for urban supply; (iv) desalter replenishment costs; and (v) Watermaster general assessments on the appropriative pool. Water procurement costs associated with Basin production also exist, but these costs exist in all scenarios and consequently net out of the comparison of the various program net benefits.

For the purpose of allocating Watermaster assessments, Tier 2 water purchases are assumed to occur outside the framework of the cooperative organization. That is, the actual production level of each agency, as recorded by the Watermaster each fiscal year for the basis of assessments, does not include any production demands that an individual agency meets through Tier 2 purchases acquired from MWD. For this reason, a separate accounting calculation is made for actual production to recover the allocation of Watermaster assessment costs to individual agencies in each period. Actual production for each agency is residual demand for Basin water less Tier 2 water purchases less storage losses and adjustments to the storage account balance.

Watermaster replenishment assessments are levied to recover desalter replenishment costs (for units up to the 20,300 AF recharge capacity of the Basin) through replenishment water purchased from MWD each year. These costs are allocated to individual agencies according to each agencies pro rata share of safe operating yield.

Watermaster general assessments are levied under baseline conditions to cover the cost of administrative costs, exclusive of the OBMP costs and the special project costs that pertain to

[19] Personal correspondence with Watermaster staff (August 29, 2007).

Peace I and Peace II. In 2007, these costs account for $816 thousand of the projected $7.87 million costs to be levied for general assessments under prevailing Peace conditions. Under baseline conditions, moreover, only the appropriative pool share of general assessment costs is paid by the appropriative pool, which amounts to $624 thousand of the $816 thousand administrative costs in 2007, with the remaining share of costs paid by the overlying agricultural and non-agricultural pools. The costs attributed to the appropriative pool are allocated across to individual agencies according to each agency's share of actual production relative to total Basin production.

4.5. Summary of Baseline Outcomes

Table 1 provides a breakdown of the projected outcome for the eight largest producers under baseline conditions in the year 2015. Total urban water demand for these producers is 293,214 AF in 2015. Total residual demand, which is the difference between urban water demand and the Basin supply available to each agency, is 273,430 AF. Available Basin water supply, the sum of the shares of safe operating yield, net agricultural transfer (inclusive of land-use conversions), and desalter water for urban supply, is 123,554 AF in the year 2015. The total water transfers of 13,089 AF reflect sales by Fontana Union Water Company and San Antonio Water Company to the remaining producers encompassed by the study. The net storage acquisition of 1,022 AF reflects the change in the local storage balance between the year 2014 (106,032 AF) and the year 2015 (107,054 AF). This increment in the water held in local storage, which must be met by in lieu production by agencies, adds to residual demand for water in the Basin, and the difference between this term and the sum of available Basin water supply and water purchases in the transfer market results in a combined import demand among producers of 137,809 AF.

Total desalter production in the year 2015 is 34,122 AF, which exceeds the available recharge capacity of the Basin, so that imported water demand is met entirely with Tier 2 water purchases.[20] Actual production among these eight agencies (123,250 AF) is the difference between residual demand for Basin water, Tier 2 purchases from MWD, in lieu recharge taken to meet the desalter replenishment obligation, storage losses (2% of local storage = 2,141 AF), and the net storage acquisition. Watermaster administrative assessments are in 2015 are $1.2 million, of which $957 thousand is paid by agencies in the appropriative pool.

[20] An additional 3,905 AF of desalter water production is projected for the Santa Ana River Water Company and City of Norco, who are not considered in this study.

Table 1: Year 2015 Outcome Under the Baseline Scenario

	Appropriator								
Component	Chino	Chino Hills	Ontario	Upland	Cucamonga	Monte Vista	Jurupa	Pomona	**Total**
Urban Water Demand	26,200	24,700	66,600	22,500	72,500	14,100	36,350	30,264	**293,214**
Available Surface Water	0	0	0	5,200	3,000	0	500	0	**8,700**
Available Other Groundwater	0	0	0	3,800	5,400	0	0	1,884	**11,084**
Residual Demand	*26,200*	*24,700*	*66,600*	*13,500*	*64,100*	*14,100*	*35,850*	*28,380*	**273,430**
Safe Operating Yield	4,034	2,111	11,374	2,852	3,619	4,824	2,061	11,216	**42,092**
Net Ag Transfer	8,916	2,398	8,660	1,875	2,980	3,228	12,840	7,371	**48,268**
Desalter Water Supply	5,000	4,200	5,000	0	0	0	19,922	0	**34,122**
Available Supply	*17,950*	*8,709*	*25,033*	*4,727*	*6,600*	*8,052*	*33,896*	*18,587*	**123,554**
Net Storage	487	280	717	-122	1,039	108	-1,653	166	**1,022**
Transfers	758	1,411	3,668	750	5,078	534	26	864	**13,089**
Import Demand	*7,979*	*14,860*	*38,616*	*7,901*	*53,461*	*5,622*	*275*	*9,095*	**137,809**
Local Storage	5,893	11,422	29,690	6,266	41,072	4,320	1,396	6,995	**107,054**
Tier 2 Purchases	7,979	14,860	38,616	7,901	53,461	5,622	275	9,095	**137,809**
Actual Production	17,512	9,328	25,067	4,589	9,889	7,210	33,343	16,312	**123,250**
Watermaster Assessments	$97	$52	$139	$26	$55	$40	$185	$91	**$685**

Notes:

1. All figures in acre-feet except Watermaster assessments.
2. Watermaster assessments are expressed in real terms (1,000s of 2007$.)

5. Peace I Scenario

The Peace Agreement introduced various program elements in the Basin that were not present under baseline conditions. The main components of the Peace Agreement considered here that altered net benefits in the Basin are: (i) an increase in Basin recharge capacity from 29,000 AF to 134,000 AF; (ii) a change in the rules for land use conversion; (iii) transfer of agricultural pool assessments to the appropriative pool; (iv) the introduction of a storage and recovery program; (v) an increase in stormwater recovery from 5,000 AF per year to 12,000 AF per year; and (v) the Pomona credit. This section describes the changes that occurred through these program elements to alter net benefits received by individual agencies in relation to the earlier discussion of the baseline outcome detailed above.

5.1. Basin Supply

Under the set of Basin programs encompassed by the Peace Agreement, three factors led to changes in available Basin supply: (i) increased stormwater capture; (ii) a change in the water allocation resulting from land use conversions (including "early transfer"); and (iii) the introduction of the Dry Year Yield program for storage and recovery through MWD. The increased stormwater capture is represented by an annual increase in Basin supply by 12,000 AF of "new yield" in exchange for tying up 12,000 AF of recharge capacity.

The net agricultural transfer to each agency under Peace conditions increased the return to each converter from 1.3 AF of Basin water for each acre converted to 2.0 AF of Basin water for each acre converted. An early transfer program of 32,800 AF per year to the appropriative pool was also introduced, which ultimately led to an over-allocation of agricultural pool water to the appropriative pool.[21] The net agricultural pool allocation to individual agencies replicates the Watermaster calculation in each year, given the projected pattern of land use conversion calculated through 2030. The agricultural pool transfer provides a credit of 2.0 AF per acre for all land-use conversions taking place after the signing of the Peace Agreement and credits earlier conversions at the 1.3 AF per acre rate and the early transfer to members of the appropriative pool is based on each agency's share of safe operating yield. Because the sum of these two components and the projected agricultural pool production level after land-use conversions have been made exceeds the 82,800 AF of available agricultural pool water in every year, each agency is charged a replenishment obligation for the amount of over-allocated agricultural pool water in proportion to each agency's share of safe operating yield. This is equivalent to deducting the over-allocation of agricultural pool water from the 32,800 AF early transfer after land use conversions take place and dividing this residual amount of water (e.g., 32,800 – 4,270 = 28,530 AF in Fiscal Year 2006-2007) pro rata among members of the appropriative pool.

In total, the net agricultural pool transfer to the appropriative pool is the same under baseline and Peace rules (49,831 AF in 2007 and 76,909 AF in 2030). Among appropriators considered in the

[21] Watermaster, Fiscal Year 2006-2007 Final Assessment Package, Land Use Conversion Summary (p10): http://www.cbwm.org/docs/financdocs/Assessment%20Package%20FY%202006-2007%20Final.pdf. In the Fiscal Year 2006-2007 Final Assessment Package provided by the Watermaster, the amount of over-allocation was 4,270 AF (3,893 AF of which is incurred as a replenishment obligation to agencies encompassed by the study), and the model projects this total to increase through the process of future land use conversions to 5,127 AF in 2030 (4,674 AF of which is incurred as a replenishment obligation to agencies encompassed by the study).

study, which encompass 91.2 percent of safe operating yield but 100 percent of land use conversions, the change in land-use conversion rules under the Peace Agreement provides a slightly larger net agricultural transfer among agencies considered than under baseline conditions (e.g., 71,673 AF after all conversions take place compared to 71,377 AF under baseline rules). The outcome for individual agencies under the Peace rules for net agricultural pool transfer relative to the baseline scenario is discussed later.

The DYY storage and recovery program alters the allocation of Basin water supply by allowing individual agencies to purchase water from MWD in wet years and store it for use in subsequent dry years. The effective rate paid to MWD for DYY water inputs, net of subsidies paid to the participating agencies, is approximately equal to the current replenishment rate,[22] and the annual MWD replenishment rate is used in each period to price DYY water inputs to individual producers. The present analysis considers the value of the currently-approved 150,000 AF storage and recovery program.[23] Although further expansion beyond this level has been discussed, the study does not consider the potential expansion of this program to 500,000 AF nor the possibility for sales of this water to take place outside the Basin. The increase in the DYY program from 100,000 AF to 150,000 AF is assumed to take place immediately in the year 2007. To adjust the implied pattern of puts and takes of a 150,000 AF storage and recovery program to the smooth production horizon of a representative hydrologic year, we assume that water production in the DYY program is limited to 50,000 AF in each dry year. Given a 0.3 probability of a dry year, this implies an average of 15,000 AF of water is made available in the Basin each year through the DYY program. The distribution of the DYY program storage across individual agencies is given by the table of DYY shift obligations provided by IEUA for the current DYY-100 program, and these values are scaled upwards proportionately to 150,000 AF.[24] It is assumed that there is no storage loss for units of water placed in storage.[25] In effect, this implies that participating agencies in the DYY program purchase 15,000 AF of water in a representative hydrologic year at MWD replenishment rates and covert this amount into 15,000 AF of reliable Basin supply through the use of existing recharge facilities.

Among the ten largest agencies considered in the study, Basin supply under Peace conditions rises from 137,416 AF in 2007 to 185,692 AF in 2030. This reflects an approximate increase of 26,000 AF per year relative to baseline conditions (under baseline conditions, Basin supply is 111,486 AF in 2007 and 159,496 AF in 2030), and the source of the additional Basin supply under the Peace Agreement amounts to the roughly 11,000 AF increased stormwater yield (the share of the 12,000 AF "new yield" acquired by the ten largest agencies) plus the 15,000 AF recovery of DYY storage water.

5.2. Import Demand

Import demand for each agency in the Basin is calculated in the same manner as the baseline case. As noted above, this involves deducting Basin supply from the Basin water demand facing each agency to get excess demand, correcting excess demand to account for the dynamic adjustments that occur in local storage accounts, and then reconciling excess supply and excess

[22] Personal communication with IEUA staff.
[23] Personal communication with Watermaster staff.
[24] IEUA Urban Water Management Plan (2005), Table 6-5.
[25] Personal correspondence with Watermaster staff.

demand among individual agencies in the Basin through water transactions in the transfer market.

Two major changes occur under Peace in the resulting evaluation of import demand. First, import demand is now lower each year than under baseline conditions by the approximate 26,000 AF of additional Basin supply that is available each year. This ultimately defrays Tier 2 water purchases as the supply-side of the model is built upwards to the third step of supply. Second, the amount of water held in the local storage account of individual agencies decreases, for instance by 17,769 AF in 2007 (83,706 AF in the baseline versus 65,937 AF under Peace.) Much of this difference in local storage balances is the result of participation in the DYY program crowding-out storage activities that would otherwise take place in local storage accounts.

5.3. Water Imports

As in the baseline case, annual water imports must flow into the Basin to meet the sum of import demand and replenishment requirements, where the Basin replenishment requirements now include 12,000 AF of stormwater recharge and 15,000 AF of replenishment water purchases for the DYY program in addition to the desalter replenishment obligation. Imported replenishment water represents the second step of the water supply relationship in Figure 2, and this step is elongated under Peace by the increase in Basin recharge capacity to 134,000 AF. Given the smoothing of production, this implies that Basin recharge capacity is 93,800 AF per year (0.7*134,000 AF) in a representative hydrologic year. Of this amount, 27,000 AF per year of recharge capacity is now used to accommodate the combined requirements of stormwater recharge and DYY program recharge, and a substantial share of the remaining recharge capacity is used to fulfill the replenishment obligation of the desalters. The desalter replenishment obligation in each year is defined in the same manner as in the baseline scenario to be desalter production less storage losses of 2 percent deducted from the local storage accounts of producers in the Basin.[26]

Under Peace conditions the need for imported Tier 2 water is smaller than under the baseline. Three main effects drive this change: (i) the recharge capacity of the Basin can now accommodate the entire desalter replenishment obligation each year without requiring agencies to engage in in-lieu recharge; (ii) the amount of annual Basin over-production that can be sustained in the Basin is larger by the amount of the increase in recharge capacity; and (iii) the reduction in local storage reduces the allocation of Basin storage losses to the desalter. The first two components produce direct value to agencies on the extensive margin of supply by defraying Tier 2 purchases (as depicted in Figure 2). The third component, the change in the designation of storage losses against the replenishment obligation of the desalters, creates no economic benefit to the Basin and is purely redistributional in its effects, because the change in the designation of storage losses does not alter the physical recharge capacity of the Basin. An individual agency that incurs a one-unit storage loss gives up a unit of water from local storage, and the value of this unit of water is distributed back to other agencies in the form of a credit against the desalter replenishment obligation.

---

[26] Peace Agreement, Article 5.2b(xii).

Under Peace conditions, the amount of replenishment water that is purchased from MWD in each representative hydrologic year is 81,800 AF (93,800 AF of recharge capacity less the 12,000 AF stormwater recharge). This 81,800 AF of replenishment water, which is purchased at MWD replenishment rates, is allocated first to meet the 15,000 AF per year replenishment water requirement for DYY participants and to meet the replenishment obligation of the desalter, with the remaining recharge capacity in each year allocated among individual agencies according to each agency's imported water demand relative to total imported water demand in the Basin.

As in the baseline scenario, imported water demand in excess of the recharge capacity of the Basin is cleared each year in the Peace I scenario on the third step of supply through purchases of Tier 2 water from MWD. Tier 2 MWD water purchases, as in the baseline case, are allocated to individual agencies based on the share of each agency's imported water demand relative to total imported water demand in the Basin.

Under peace conditions, the total purchases of Tier 2 water among agencies in the Basin rise from 25,692 AF in 2007 to 127,710 AF in 2030, a decline of approximately 72,000 AF per year relative to the baseline scenario. This decline in Tier 2 water purchases is approximately equal to the increase in recharge capacity under the Peace Agreement and represents a replacement of Tier 2 water purchases with replenishment water purchases at the lower MWD rate in each year. Cucamonga Valley Water District and the City of Ontario, the two largest buyers of imported water in both the baseline and Peace I, receive the largest share of the net benefit of this offset in Tier 2 water, because of their disproportionate representation on the extensive margin of supply.

5.4. Water Procurement Costs

The total cost of water procurement to individual agencies is the sum of eight components: (i) Tier 2 water purchases; (ii) transfer water purchases; (iii) desalter water purchases for urban supply; (iv) replenishment water purchases; (v) desalter replenishment costs; (vi) Watermaster general assessments on the appropriative pool; (vii) Watermaster general assessments on the agricultural pool paid by the appropriative pool; and (viii) the Pomona credit. The first three components of water procurement cost are calculated in the same manner as in the baseline case, with the exception that the total quantities of Tier 2 purchases and transactions in the transfer market differ.[27]

Desalter replenishment costs are recovered through Watermaster replenishment assessments in an amount equal to the cost of replenishment water purchased from MWD to meet the replenishment obligation of the desalters each year. As in the baseline case, these costs are allocated to individual agencies according to each agencies pro rata share of safe operating yield.[28]

Replenishment water purchases allocated to individual agencies related to the DYY program are levied back on individual agencies in proportion to their storage claims in the program, as detailed above. Any remaining recharge capacity in excess of the amount needed to fulfill DYY

[27] Changes in the pattern of Tier 2 water purchases and water transfers that occur across scenarios and over time within each scenario can have equilibrium effects on market prices; however, price changes in these markets are not considered in the scope of the present study.

[28] Personal correspondence with Watermaster staff (August 29, 2007).

contributions and the replenishment obligation of the desalters and DYY is allocated in each year to individual agencies according to each agency's imported water demand relative to total imported water demand in the Basin.

The total costs recovered through Watermaster general assessments for the program elements in the Peace I scenario include OBMP assessments, special project assessments, and recharge debt payments. The additional OBMP and special project assessments in the Peace I scenario amount to a total $7.05 million out of the $7.87 million (90 percent) in total Watermaster expenses in 2007, and these additional costs of implementing the program elements in the Peace I scenario rise to $13.8 million in 2030. As in the baseline scenario, the allocation of all appropriative pool general assessments to individual agencies is made based on each agency's share of safe operating yield in the Basin.

The Peace Agreement negotiated the transfer of all general assessment fees from the agricultural pool to the appropriative pool. The total assessment fees paid by the agricultural pool, which are now assumed by members of the appropriative pool, amount to $1.1 million in 2007 and decline to $460 thousand in 2030 due to land use conversions that result in a decline in agricultural water use as a share of total Basin safe yield. In total, the general assessments paid by the appropriative pool inclusive of the transfer of agricultural pool assessments increase ten-fold from $624 thousand in the baseline scenario to $6.3 million under Peace conditions in 2007 and the assessment costs in the Peace I scenario remain at least 7 times as large as the costs attributable to baseline conditions in the Basin throughout the production horizon. The agricultural pool share of Watermaster assessment fees is paid by individual agencies in the appropriative pool according to the agency's share of the net agricultural transfer in each year.[29]

Finally, the Pomona credit of $66,667 per year is paid every year by each agency in proportion to the agency's share of safe operating yield.

5.5. Comparison of Baseline and Peace Agreement Outcomes

Under the terms of the Peace Agreement, the present value of the net benefit of the program elements for the ten agencies encompassed by the study is $182 million. The main component associated with this increased net benefit is the displacement of Tier 2 water with new Basin yield and replenishment water. Under baseline conditions, the present value of total Tier 2 water purchases over the 2007-2030 period is $1.53 billion, whereas, under Peace conditions, the present value of Tier 2 water purchase over the period decreases to $931 million. This decrease in Tier 2 water under Peace conditions was replaced with replenishment water at the lower MWD rate, and the combined cost of imported water in the Peace I scenario decreased by $310 million in present value terms (from $2.06 billion under baseline conditions to $1.75 billion under Peace conditions). This benefit was acquired at the expense of an increase in the present value of assessment costs from $16.7 million to $146 million.

[29] For details on this calculation and the distribution of general appropriative pool assessments based on pro rata share of safe operating yield, see Watermaster, Fiscal Year 2006-2007 Final Assessment Package, Pool 3 Assessments Summary (p5): http://www.cbwm.org/docs/financdocs/Assessment%20Package%20FY%202006-2007%20Final.pdf.

Table 2 provides a breakdown of the projected outcomes under Peace conditions in the year 2015 for the eight largest producers in the study. A comparison of these outcomes with those that emerge under baseline conditions in Table 1 provides a useful profile of the essential differences in Basin performance under each scenario. Residual demand for Basin water is identical in each scenario. This quantity corresponds to the value Q* in Figure 1. The safe operating yield of the agencies considered is the same in both cases, as is desalter water for urban supply. The net agricultural pool allocation to the appropriative pool is slightly higher under Peace (48,848 AF relative to 48,268 AF under baseline rules). This is because the agencies considered in the study represent 91 percent of Basin production and nearly 100 percent of the land use conversions, which are credited with a larger water allocation under Peace. Available Basin supply in the Peace I scenario is accordingly higher by the sum of this component and the 15,000 AF of supply available to agencies through the DYY program, which leads to a commensurate reduction in imported water demand.

The level of local storage is lower under Peace by approximately the 15,000 AF of storage that is now accounted for in the DYY program. Replenishment purchases are now possible due to the increase in Basin recharge capacity, and the agencies combine to purchase 31,533 AF of replenishment water in the year 2015.

In total, Tier 2 water use falls from 137,809 AF under baseline conditions (inclusive of the purchases required by in lieu recharge) to 82,658 AF under Peace conditions. This decrease in Tier 2 water imports reflects the displacement of Tier 2 water purchases through a combination of new Basin yield and increased replenishment water purchases made possible by the expansion of Basin recharge capacity.

Actual production among these eight agencies is higher in the Peace I scenario by 36,953 AF in the year 2015 (160,203 AF vs. 123,250 AF in the baseline scenario). This increment in Basin production represents the effective increase in Basin recharge capacity available to these producers after accounting for the combined 27,000 AF of recharge capacity utilized by stormwater and DYY program recharge.

Table 2: Year 2015 Outcome Under Peace I Scenario

	Appropriator								
Component	Chino	Chino Hills	Ontario	Upland	Cucamonga	Monte Vista	Jurupa	Pomona	**Total**
Urban Water Demand	26,200	24,700	66,600	22,500	72,500	14,100	36,350	30,264	**293,214**
Available Surface Water	0	0	0	5,200	3,000	0	500	0	**8,700**
Available Other Groundwater	0	0	0	3,800	5,400	0	0	1,884	**11,084**
Residual Demand	*26,200*	*24,700*	*66,600*	*13,500*	*64,100*	*14,100*	*35,850*	*28,380*	**273,430**
Safe Operating Yield	4,034	2,111	11,374	2,852	3,619	4,824	2,061	11,216	**42,092**
New Yield	883	462	2,489	624	792	2,455	451	2,489	**10,645**
Net Ag Transfer	10,558	2,173	7,210	1,467	2,460	2,553	16,658	5,769	**48,848**
Desalter Water Supply	5,000	4,200	5,000	0	0	0	19,922	0	**34,122**
Storage & Recovery	527	658	3,671	1,364	5,160	1,801	909	909	**15,000**
Available Supply	*21,001*	*9,604*	*29,744*	*6,308*	*12,032*	*10,234*	*39,074*	*20,349*	**148,346**
Net Storage	428	288	771	-107	1,058	133	0	225	**2,797**
Transfers	726	1,985	4,854	914	6,854	516	-3,224	1,065	**13,690**
Import Demand	*4,901*	*13,399*	*32,773*	*6,171*	*46,272*	*3,483*	*0*	*7,192*	**114,191**
Local Storage	3,713	10,783	26,326	5,137	37,191	2,761	0	5,737	**91,649**
Replenishment Purchases	1,353	3,700	9,050	1,704	12,778	962	0	1,986	**31,533**
Tier 2 Purchases	3,548	9,699	23,723	4,467	33,494	2,521	0	5,206	**82,658**
Actual Production	21,653	11,373	34,071	7,119	18,142	10,695	35,850	21,299	**160,203**
Watermaster Assessments	$849	$401	$1,258	$267	$629	$411	$1,353	$795	**$5,963**

Figure 1 compares the benefit received by each agency from reduced water procurement costs to the increase in assessment cost that result from the implementation of the program elements in the Peace I scenario. The assessment costs associated with implementing the program elements considered in the Peace I scenario are represented by an overall increase from $16.7 million to $146 million in present value terms. The program benefits in present value terms in the Peace II scenario are reflected in the decrease in water procurement costs from $2.1 billion under baseline conditions to $1.8 billion in the Peace I scenario.

In terms of the total benefit, two agencies, City of Ontario and Cucamonga Valley Water District, receive the largest share of the benefits resulting from the Peace I program elements, while the assessment costs are distributed more equally among producers. In total, the City of Ontario and Cucamonga Valley Water District together receive 46 percent of the benefit of decreased water procurement costs and incur 32 percent of the increase in assessment costs. An important reason these agencies receive a large share of the net benefit from the agreements is due to a scale effect in the annual level of residual demand for Basin water, for instance in 2015 these two agencies combined account for 48 percent of residual demand for Basin water (130,700 AF out of 273,430 AF).

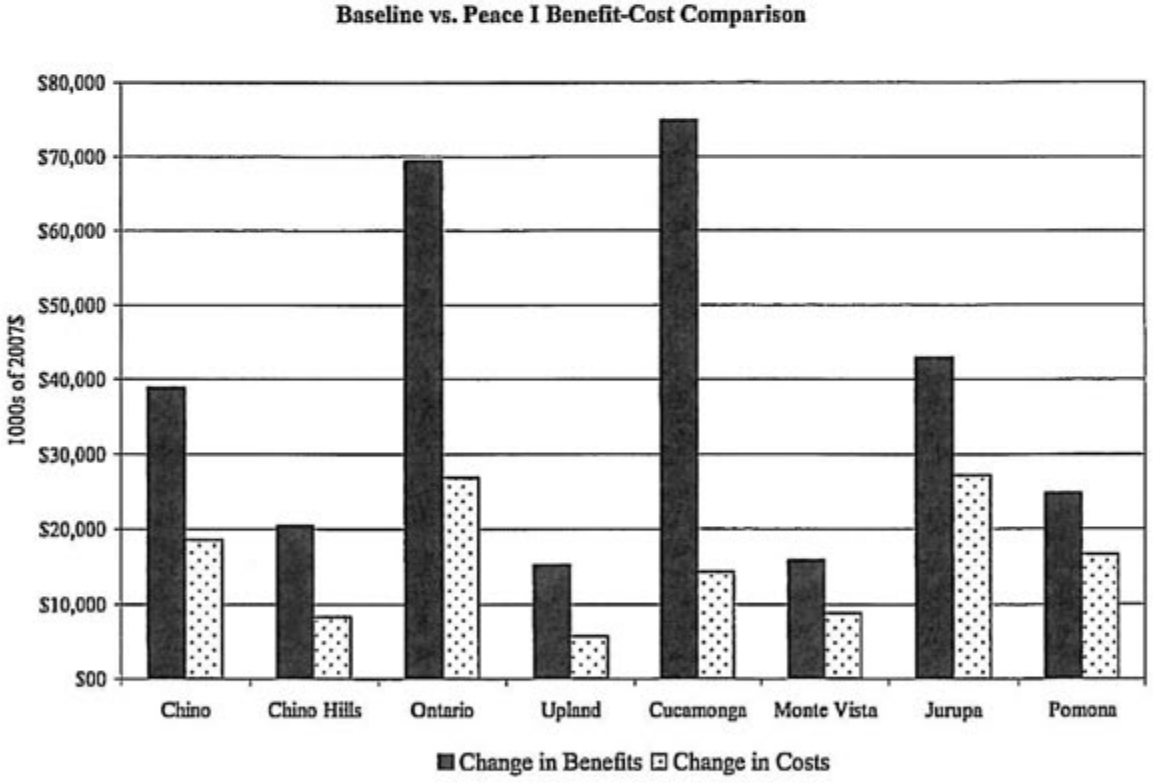

Figure 1

Distribution of Net Benefit, Peace I vs. Baseline ($/per AF)

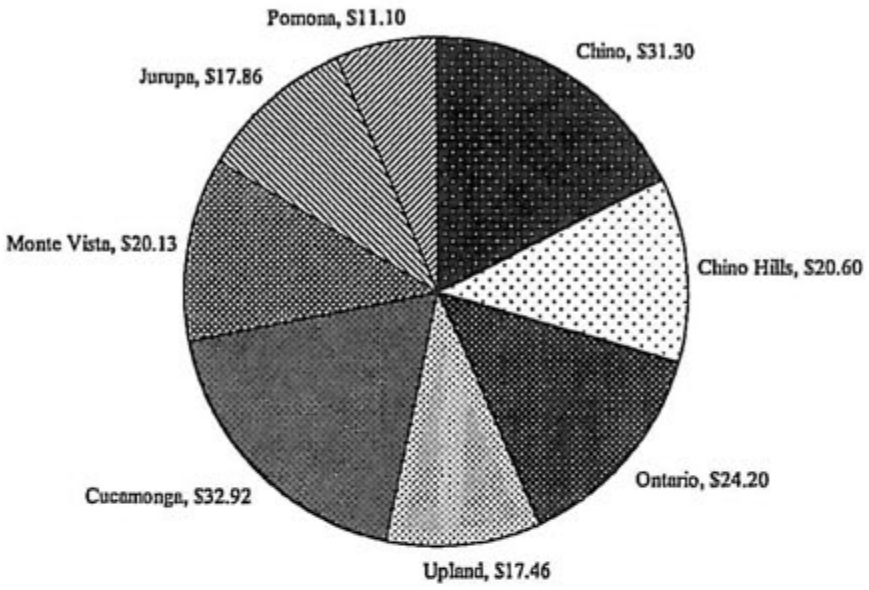

Figure 2

Figure 2 shows the distribution of net benefits per acre-foot of residual water demand across individual agencies in the Basin resulting from the program elements in the Peace I scenario. Fontana Union Water Company and San Antonio Water Company are not included in these calculations, because the available surface water and other groundwater supplies for these agencies exceed their total demand. Controlling for agency scale on the basis of residual demand for Basin water among the remaining producers, the net benefit resulting from the combined program elements in the Peace II Agreement is grouped between $11.10/AF for the City of Pomona to $32.92/AF for Cucamonga Valley Water District. Overall, the present value of the net benefit to all parties over the 24 year horizon resulting from a move from baseline conditions to Peace conditions is $182 million and the total residual demand for water over this period is 6.9 million AF, which implies an average return of $19.84 per acre-foot to the agencies encompassed by the study.

6. Peace II Scenario

The Peace II scenario introduces several major program elements in the Basin that build on the existing conditions under Peace. The main components of the Peace II scenario that alter market values in the Basin relative to the Peace I scenario are: (i) hydraulic control, which provides 400,000 AF of cumulative forgiveness and SAR inflow of 9,900 AF per year in the Basin; (ii)

the production of recycled water; (iii) a change in the allocation of the replenishment obligation associated with over-production in the agricultural pool transfer; (iv) a transfer of overlying non-agricultural pool water to the appropriative pool; and (v) a transfer of the Pomona credit from Basin agency to Three Valleys. This section describes the changes that occurred through these program elements to alter net benefits received by individual agencies in relation to the earlier discussion of the existing program elements in Peace Agreement.

6.1. Basin Supply

Under the set of programs encompassed by the Peace II Agreement, five factors led to changes in available Basin supply relative to prevailing conditions under Peace: (i) a change in the water allocation resulting from land use conversions; (ii) the influx of recycled water (for direct use and groundwater recharge), (iii) the transfer of 49,178 AF of overlying non-agricultural water to the appropriative pool; (iv) 9,900 AF per year of inflow from the Santa Ana River (SAR), eventually rising to 12,500 AF per year; and (v) 400,000 AF of cumulative forgiveness for Basin over-production. Unlike the program elements implemented in the Peace I scenario, all elements of the Peace II scenario (with the exception of the transfer of the Pomona credit to Three Valleys) fundamentally alter supply conditions on the lowest step of the supply relationship by contributing new sources of Basin yield.

The net agricultural transfer to each agency in the Peace II scenario maintains the return to each converter of 2.0 AF of Basin water for each acre converted and the early transfer of 32,800 AF per year to the appropriative pool, but alters the allocation rule for the replenishment obligation for the amount of over-allocated agricultural pool water. Under Peace II rules, the replenishment obligation for over-allocated agricultural pool water is made on the basis of a weighted average of the share of safe operating yield and share of cumulative land-use conversions for each agency (the "proportion of water available for reallocation (PAR)") rather than in proportion to each agency's share of safe operating yield in the Peace I scenario. By placing greater weight on land use conversions, a greater share of the replenishment obligation for over-allocated agricultural pool water is placed on land-use converters. For instance, the combined share of safe operating yield of the two largest land-use converters in the Basin—City of Chino and Jurupa Community Services District—is approximately 10 percent, whereas the combined PAR share of these agencies in Fiscal Year 2006-2007 is 38 percent.[30]

The use of significant quantities of recycled water is made possible in the Basin by the attainment of hydraulic control.[31] Recycled water projections for direct use in the Basin increase from 11,924 AF in 2007 to 60,450 AF in 2030 and recycled water use for groundwater recharge rises over the period from 3,443 AF to 35,000 AF.[32, 33] The recycled water price charged by

---

[30] Watermaster, Fiscal Year 2006-2007 Final Assessment Package, Land Use Conversion Summary (p10): http://www.cbwm.org/docs/financdocs/Assessment%20Package%20FY%202006-2007%20Final.pdf.

[31] Personal correspondence with IEUA staff.

[32] Projections on recycled water deliveries for direct use and on total recycled water for groundwater recharge is provided for IEUA members in IEUA Urban Water Management Plan (2005), Table 3-13. The projections on recycled water deliveries for direct use to non-IEUA members as well as the distribution of recycled water deliveries for groundwater recharge across individual agencies are based on personal communication with IEUA staff (July 11, 2007).

[33] In no case does the amount of recycled water used for recharge exceed the DHS-approved dilution rates.

IEUA for recycled water deliveries in each period is viewed as sufficient to recover the fully amortized capital and operating costs of their recycled water operations.[34]

The amount of transfer of overlying non-agricultural water to the appropriative pool is taken to be 49,178 AF, which is the ending total balance in the pool 2 local storage account in the Watermaster final assessment package for fiscal year 2006-2007.[35] This amount of water is allocated proportionally in four equal installments over the four-year period 2007-2010 to agencies in the appropriative pool according to their share of safe operating yield, and the price in each period is set at 92 percent of the prevailing MWD replenishment rate.[36]

Finally, in meeting the goal of hydraulic control in the Peace II scenario, two sources of water are created: (i) the Santa Ana River (SAR) inflow is calculated to generate 9,900 AF of new Basin yield each year, eventually rising to 12,500 AF per year; and (ii) 400,000 AF of cumulative overdraft is necessary in the Basin over the period 2007-2030.[37] Both the 9,900 AF per year of SAR inflow and the allocation of the 400,000 AF of cumulative forgiveness are allocated to meet the replenishment obligation of the desalters. The dynamic path of forgiveness for the desalter obligation follows the most-rapid depletion path defined by the aggregate study, which assumes that the Basin overdraft occurs to whatever extent is necessary to meet the replenishment obligation of the desalters (net of storage losses and SAR inflow). Under the most-rapid depletion path, hydraulic control is achieved on the cumulative overdraft of 400,000 AF from the Basin in the year 2024, which raises the SAR inflow from 9,900 AF to 12,500 AF over the remaining period 2025-2030.

6.2. Import Demand

The demand for imported water for each agency in the Basin is calculated in the same manner as in the Peace scenario. In terms of the resulting values, the influx of new Basin water supply in response to recycled water use alter the resulting evaluation of import demand relative to the prevailing conditions under Peace in two significant ways. First, import demand is now lower each year relative to the outcome under Peace conditions by the amount of new Basin supply. This water ultimately defrays Tier 2 water purchases as the supply side of the model is built upwards and aggregated across each step towards the extensive margin of supply. As these supplies are developed, available supply in the Basin rises to 266,134 AF by the year 2030, an increase of 80,442 AF above the Peace I scenario and 106,678 AF above the baseline conditions.

Second, the amount of water held in local storage by individual agencies decreases to account for the effect of these new, reliable water sources in the Basin and the corresponding reduction in the need to smooth out the cyclical components of water supplies with puts and takes. As recycled water supplies are developed in the Basin, the need for local storage decreases; for instance, the total amount of water held in local storage in the Basin in 2030 decreases from 141,565 AF under baseline conditions, to 129,259 AF in the Peace I scenario, to 80,500 AF in the Peace II scenario.

---

[34] IEUA, Operating and Capital Program Budget, Fiscal Year 2007/08, Volume 1 (July 2007), p231.

[35] Watermaster, Fiscal Year 2006-2007 Final Assessment Package, Pool 2 Water/Storage Transactions (p12): http://www.cbwm.org/docs/financdocs/Assessment%20Package%20FY%202006-2007%20Final.pdf.

[36] Non-Binding Term Sheet, item IX.C.

[37] Personal correspondence with staff at Wildermuth Environmental.

The quantity of water transactions in the water transfer market rises significantly as the number of agencies selling water increases with the influx of recycled water supplies. This changes the distribution of net benefits, both directly by the allocation of recycled water supplies based on proximity of users (rather than according to the share of safe operating yield) and indirectly by reducing the number of agencies that procure water on the extensive margin of supply.

6.3. Water Imports

An important outcome in the Peace II scenario as a result of hydraulic control is the decrease in Tier 2 water purchases relative to both the baseline and Peace I scenarios. Unlike the case of the Peace I scenario, in which the decline in Tier 2 purchases was largely offset by an increase in assessment costs to support the increase in recharge capacity, the avoided Tier 2 water purchases in the Peace II scenario are associated either with negligible costs (SAR inflow and forgiveness for Basin over-draft) or with the relatively low cost associated with recycled water, which is valued at IEUA recycled water rates. These differences are characterized in the discussion below.

In addition, the level of water imports increases slightly in the Peace II scenario, because of a reduction in the storage loss component allocated to meet the desalter replenishment obligation. In the Peace II scenario, the desalter replenishment obligation is taken to be desalter production less storage losses of 1 percent from the local storage accounts of producers in the Basin.[38]

6.4. Water Procurement Costs

All program costs that form the basis for Watermaster assessments in the Peace I scenario (as described above) are considered in the Peace II scenario, with the exception of the Pomona credit, which is no longer paid by appropriators in the Basin and is instead paid by Three Valleys Municipal Water District.[39] The removal of this fee from Watermaster assessments leads to an increase in net benefit to agencies in the Basin by $66,667, and this is returned to agencies in proportion to each agency's share of safe operating yield. The increase in net benefit is offset by a proportional increase in cost for Three Valleys Municipal Water District, and the present value of this stream of payments over the period 2007-2030 at the prevailing rate of discount (4.5 percent) is $1.0 million.

Recycled water costs are allocated to each agency using the recycled water prices provided by IEUA, as discussed above. The desalter replenishment obligation, which begins in the year 2024 after the 400,000 AF of over-draft credits are exhausted, is met in the Peace II scenario through Watermaster replenishment assessments as follows. Half of the desalter replenishment obligation is met by individual agencies according to pro rata shares of safe operating yield, as in the Peace I scenario, and the remaining half of the desalter replenishment obligation is met according to each agency's share of actual production relative to total production in the Basin.[40] This latter portion of the Watermaster replenishment assessments accords with the method of allocating Watermaster general assessments to the appropriative pool in all three scenarios considered. The

[38] Non-Binding Term Sheet, Item VI.B.1.
[39] Non-Binding Term Sheet, item VII.A.
[40] Personal correspondence with Watermaster staff (August 29, 2007).

method for calculating the remaining water procurement costs for each agency is identical to the method described above for the Peace I scenario.

6.5. Comparison of Baseline, Peace I, and Peace II Outcomes

Relative to baseline conditions, the present value of total net benefit among the ten agencies encompassed by the study for the program elements contained in the Peace II scenario is $904.6 million, which represents an additional net benefits of $722.5 million relative to the outcome of the Peace I scenario.

The main factor associated with this increased net benefit is the displacement of Tier 2 water with recycled water, SAR in-flow, and, in the period 2007-2024, with forgiveness for 400,000 AF of Basin over-draft to attain hydraulic control. Under peace I conditions, the present value of total Tier 2 water purchases over the period 2007-2030 is $931 million, whereas, in the Peace II scenario, the present value of Tier 2 water purchases over the period is $271 million. This decrease in Tier 2 water costs in the Peace II scenario was replaced with a combination of 400,000 AF of forgiveness for Basin over-draft and recycled water at the lower IEUA recycled water rate.[41] The combined present value of cost of imported water and recycled water inputs in the Peace II scenario is $1.0 billion, which represents a substantial reduction in the present value of water procurement cost from $1.75 billion in the Peace I scenario.

Table 3 depicts the projected outcomes to individual agencies in the Peace II scenario for the year 2015. A comparison of these outcomes with those that emerge in the baseline scenario in Table 1 and the Peace I scenario in Table 2 provides a useful profile of the essential differences in Basin performance under Peace II conditions. Residual demand, which corresponds to the value Q* in Figure 1, is identical in all three scenarios, as is the safe operating yield of the agencies and desalter production. The net agricultural pool transfer to the appropriative pool (48,530 AF) is between the values that emerge in the Peace I scenario (48,848 AF) and the baseline scenario (48,268 AF). Relative to the outcome under Peace I conditions, the new rules for assessing replenishment obligations for the over-allocated agricultural pool water redistribute the net returns away from the major land-use converters in the Basin (in particular, the City of Chino and Jurupa Community Services District).

Available Basin supply in the Peace II scenario in the year 2015 (208,199 AF) is considerably higher than the available Basin supply in the baseline scenario (123,554 AF) and Peace I scenario (148,346 AF), which leads to a commensurate reduction in imported water demand. Virtually the entire difference in imported water demand between the Peace I scenario and the Peace II scenario is the result of the 60,171 AF addition of recycled water (direct use plus groundwater replenishment).

The level of local storage in the Peace II scenario in, 53,293 AF, is lower than local storage levels in the baseline (107,054 AF) and Peace I scenarios (91,649 AF) due to the large influx of

[41] The allocation of the 400,000 AF of forgiveness to meet the replenishment obligations of the desalters is implicitly valued at the Tier 2 rate, because each unit of forgiveness that is credited against the desalter replenishment obligation, which is valued directly in the model at the replenishment rate, "frees up" a unit of recharge capacity that allows a unit of Tier 2 water to be displaced on the extensive margin of supply.

reliable Basin water through the development of the recycling program and the acquisition of SAR inflow. This greater availability of Basin water supply also facilitates a richer pattern of water transfers in the Peace II scenario.

In total, Tier 2 water purchases in the year 2015 are 10,186 AF, which represents a substantial reduction from the 137,089 AF of Tier 2 water purchases that take place under baseline conditions (inclusive of the purchases required by in lieu recharge) and the 82,658 AF under Peace I conditions. Replenishment water purchases increase in the Peace II scenario from 31,533 AF in the Peace I scenario to 41,800 AF in the Peace II scenario. The increase in replenishment imports reflects the replacement of 35,267 AF of replenishment obligations in the Peace I scenario with SAR inflow and desalter forgiveness in the year 2015, less the 20,671 AF claim on recharge facilities associated with the groundwater recharge component of the recycled water program in the Peace II scenario. The decrease in Tier 2 water imports of 72,430 AF between the Peace I and Peace II scenario is the result of the displacement of Tier 2 water purchases with a combination of recycled water, SAR in-flow, and allowed over-draft.

Actual production among these eight agencies in the year 2015 (182,170 AF) is higher in the Peace II scenario than in the Peace I scenario (160,203 AF) and the baseline scenario (121,138 AF). This increment in Basin production relative to the Peace I scenario represents the increase in Basin supply resulting from the use of recycled water for groundwater recharge as well as small adjustments in storage loss and net storage requirements.[42]

Finally, notice in the comparison of Tier 2 purchases by individual agencies in Tables 1-3 that the distribution of Tier 2 water purchases across individual agencies in the Basin differs in all three scenarios relative to the distributions of safe operating yield and the distribution of actual production. These elements together comprise the basis for the allocation of collective Basin net benefits to individual agencies, with the division of market benefits from Basin improvement activities determined by each agency's share of Tier 2 water purchases, and the allocation of cost determined through Watermaster formulas that are based either on a individual agency's share of actual production to total Basin production or on a individual agency's share of safe operating yield. Differences in the distributions of these three key values across individual agencies in the Basin are responsible for inequalities in the distribution the net benefit from the various program elements that improve the management of Chino Basin water resources.

[42] Recycled water for direct use offsets urban water demand, but does not otherwise influence Basin production.

Table 3: Year 2015 Outcome Under Peace II Scenario

	Appropriator								
Component	Chino	Chino Hills	Ontario	Upland	Cucamonga	Monte Vista	Jurupa	Pomona	**Total**
Urban Water Demand	26,200	24,700	66,600	22,500	72,500	14,100	36,350	30,264	**293,214**
Available Surface Water	0	0	0	5,200	3,000	0	500	0	**8,700**
Available Other Groundwater	0	0	0	3,800	5,400	0	0	1,884	**11,084**
Residual Demand	*26,200*	*24,700*	*66,600*	*13,500*	*64,100*	*14,100*	*35,850*	*28,380*	**273,430**
Safe Operating Yield	4,034	2,111	11,374	2,852	3,619	4,824	2,061	11,216	**42,092**
New Yield	883	462	2,489	624	792	2,455	451	2,489	**10,645**
Net Ag Transfer	10,103	2,176	7,559	1,581	2,560	2,739	15,599	6,215	**48,530**
Desalter Water Supply	5,000	4,200	5,000	0	0	0	19,922	0	**34,122**
Storage & Recovery	527	658	3,671	1,364	5,160	1,801	909	909	**15,000**
Recycled Water, Direct Use	6,300	4,000	8,800	0	15,900	500	2,500	1,500	**39,500**
Recycled Water, Replenishment	2,402	2,188	5,590	2,450	5,304	1,070	1,667	0	**20,671**
Available Supply	*29,248*	*15,796*	*44,482*	*8,871*	*33,336*	*11,990*	*42,181*	*22,294*	**208,199**
Net Storage	0	69	527	-153	5	94	0	217	**759**
Transfers	-3,048	2,784	7,026	1,389	9,546	684	-6,331	1,955	**14,004**
Import Demand	*0*	*6,190*	*15,619*	*3,087*	*21,223*	*1,520*	*0*	*4,347*	**51,986**
Local Storage	0	6,360	15,798	3,306	21,974	1,507	0	4,347	**53,293**
Replenishment Purchases	0	4,977	12,559	2,482	17,064	1,222	0	3,495	**41,800**
Tier 2 Purchases	0	1,213	3,060	605	4,158	298	0	852	**10,186**
Actual Production	19,900	14,516	42,550	10,227	26,762	12,159	33,350	22,706	**182,170**
Watermaster Assessments	$707	$447	$1,368	$327	$804	$411	$1,129	$753	**$5,946**

Figure 3 compares the benefit received by each agency from reduced water procurement costs to the increase in assessment cost that result from the implementation of the program elements in the Peace II scenario. The program costs in the Peace II scenario do not differ substantively from program costs in the Peace I scenario, and represent an overall increase from $17 million to $143.2 million in present value terms. The program benefits in present value terms in the Peace II scenario are reflected in the decrease in water procurement costs from $2.1 billion under baseline conditions to $1.1 billion in the Peace II scenario.

City of Ontario and Cucamonga Valley Water District receive the largest share of the benefits resulting from the Peace II program elements, while the assessment costs resulting from the Peace II program elements are notably smaller and distributed more equally across the agencies. In total, the City of Ontario and Cucamonga Valley Water District together receive 56 percent of the benefit of decreased water procurement costs and incur 39 percent of the increase in assessment costs.

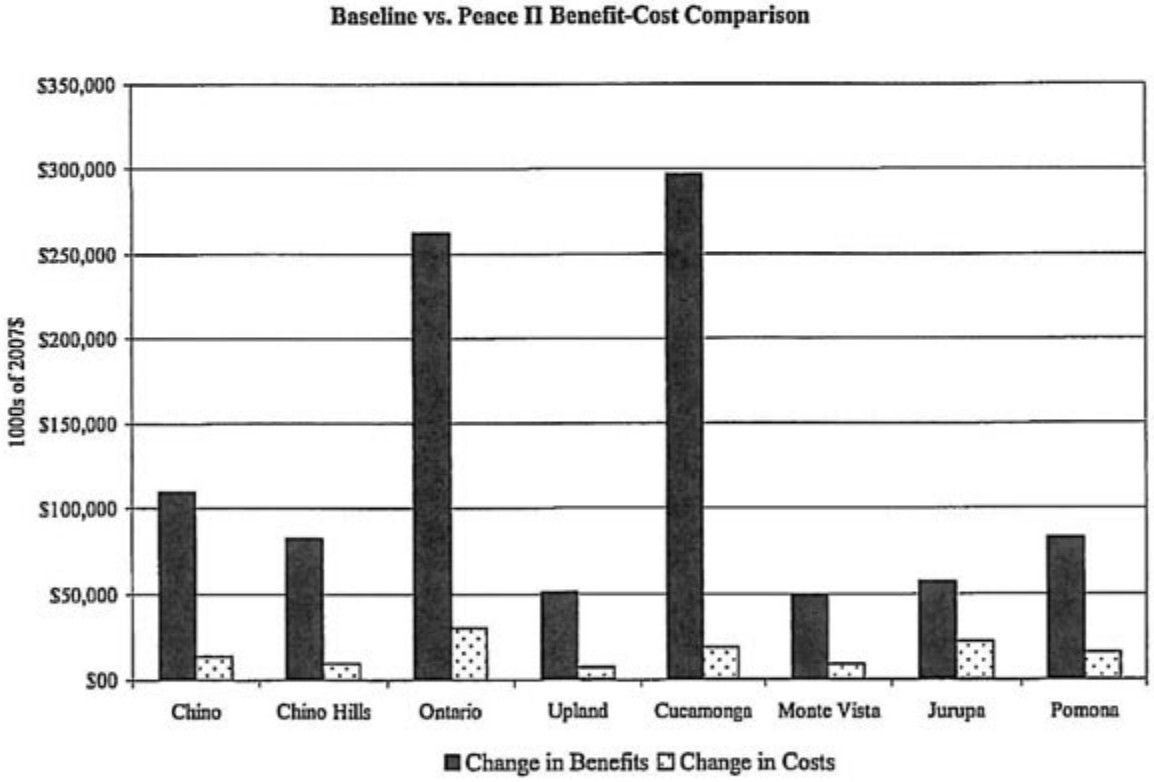

Figure 3

Distribution of Net Benefit, Peace II vs. Baseline ($/per AF)

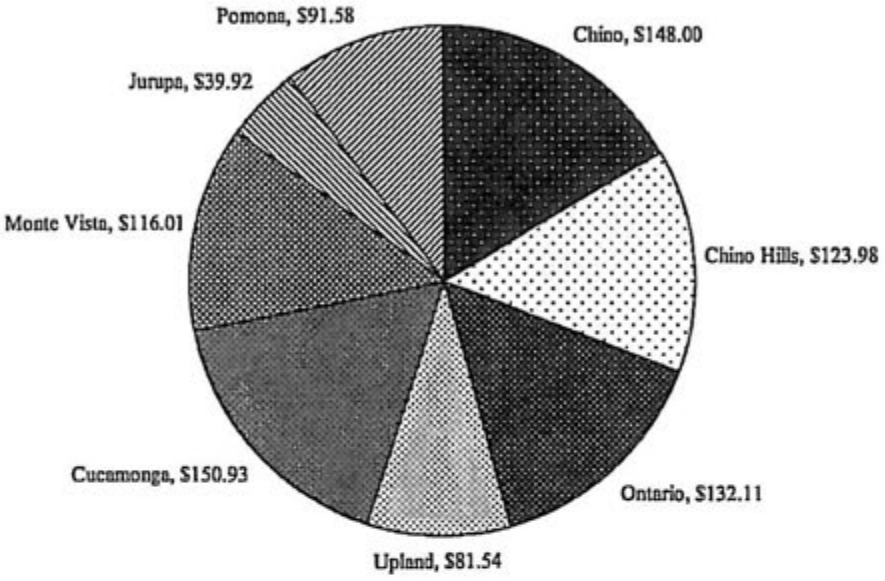

Figure 4

Figure 4 depicts the distribution of net benefits per acre-foot of residual water demand across individual agencies in the Basin resulting from the program elements in the Peace II scenario. Overall, the present value of the net benefit to all parties over the 24 year horizon resulting from a move from baseline conditions to Peace conditions is $905 million and the total projected water demand over this period is 9.1 million AF, which implies an average return of $98.53 per acre-foot to the agencies encompassed by the study.

Noting, as before, that Fontana Union Water Company and San Antonio Water Company have available surface water and other groundwater supplies in excess of their demand, and controlling for agency scale on the basis of residual demand for Basin water among the remaining producers, the net benefit resulting from the combined program elements in the Peace II Agreement lies between $39.92/AF for Jurupa CSD to $150.93 for Cucamonga Valley Water District.

The net benefit/AF received by Jurupa Community Services District is significantly smaller than the net benefit/AF received by other producers, because of systematic differences in the way this agency meets consumer water demand. Jurupa Community Services District is disadvantaged in the ability to capitalize on program elements that improve Basin performance by the large share of desalter water for urban water supply it receives, which cannot be defrayed by the development of new Basin supplies, and by a negligible reliance on imported water from MWD.

Among the remaining agencies, the Cities of Pomona and Upland receive a smaller share of the net benefit/AF, while Monte Vista Water District, the Cities of Chino, Ontario, Upland, and Chino Hills, and Cucamonga Valley Water District each receive a net benefit/AF above $116/AF.

7. Alternative Scenarios

This section examines the sensitivity of the results to variations in various assumptions underlying the model. In theory, each of the factors considered here has the potential to change the relative rankings among agencies with respect to benefits per acre-foot. For example, increasing the cost of capital will tend to elevate the ranking of agencies that receive benefits in early years. These sensitivity analyses are intended to bracket actual results and measure the sensitivity of outcomes to changes in assumptions.

Five parameters are varied and the model results are recalculated in each case. The alternative scenarios considered are: (i) variation in the share of the desalter replenishment obligation attributed to the appropriative pool in the baseline case; (ii) variation in the discount rate; (iii) variation in Urban Water Demands; (iv) variation in the availability of Tier 1 water to agencies in the Basin; and (v) increases in effective recycled water prices due to the long-run average cost of recycled water infrastructure improvements.

The model results are most sensitive to the scenario in which all Tier 2 water purchases in the model are replaced with Tier 1 water purchases at the lower MWD rate. The results of this scenario are shown in Table 4. This scenario provides a bracketing assumption on the value of the outside water options available to agencies and it is unlikely that each agency can meet annual increases in urban water demand every year with a continued expansion of Tier 1 purchases. To the extent that individual agencies differ in their access to Tier 1 water, moreover, market forces would lead to a displacement of Tier 2 water purchases on the extensive margin of supply before any displacement occurs of Tier 1 water purchases, so that a model that considered a relatively equal mix of Tier 1 and Tier 2 water supplies would not result in values near the mid-point between the Tier 1 scenario and the Tier 2 scenario. Nonetheless, the total net benefit in the Basin under Peace II scenario remains high—$611.7 million ($88.89/AF)—even when the entire increase in Basin supply is valued at the displacement cost of Tier 1 water.

The model results are fairly robust to variations in the remaining parameters. In total, the net benefit of the Peace II program elements varies across the scenarios in a range between $806.7 million - $864.4 million ($87.87/AF - $104.22/AF) in each scenario, relative to the $904.6 million ($98.53/AF) at baseline levels of the parameters.

Table 4: Tier 2 Replaced By Tier 1

	Net Benefit (1000s of $)		Net Benefit/AF	
	Peace I vs. Baseline	*Peace II vs. Baseline*	*Peace I vs. Baseline*	*Peace II vs. Baseline*
City of Chino	$8,549	$77,828	$13.18	$120.03
City of Chino Hills	$18	$46,218	$0.03	$77.92
City of Ontario	$1,451	$148,970	$0.83	$84.73
City of Upland	$328	$27,599	$0.61	$51.04
Cucamonga Valley Water District	$14,025	$175,240	$7.61	$95.10
Fontana Union Water Co.	$1,451	$26,880		
Monte Vista Water District	($2,090)	$27,005	($5.99)	$77.39
San Antonio Water Company	$342	$6,337		
Jurupa CSD	$10,611	$29,242	$12.01	$33.11
City of Pomona	($5,720)	$46,453	($7.76)	$62.99
Total	**$28,965**	**$611,773**	**$3.15**	**$66.63**

Table 5: 50% of Desalter Obligation Paid by Ag Pool

	Net Benefit (1000s of $)		Net Benefit/AF	
	Peace I vs. Baseline	*Peace II vs. Baseline*	*Peace I vs. Baseline*	*Peace II vs. Baseline*
City of Chino	$15,450	$91,122	$23.83	$140.53
City of Chino Hills	$9,681	$71,001	$16.32	$119.70
City of Ontario	$28,888	$218,613	$16.43	$124.34
City of Upland	$6,017	$40,661	$11.13	$75.20
Cucamonga Valley Water District	$56,320	$273,782	$30.56	$148.57
Fontana Union Water Co.	($2,836)	$22,592		
Monte Vista Water District	$1,232	$34,687	$3.53	$99.41
San Antonio Water Company	($669)	$5,326		
Jurupa CSD	$13,297	$32,779	$15.06	$37.11
City of Pomona	($5,280)	$54,068	($7.16)	$73.31
Total	**$122,101**	**$844,632**	**$13.30**	**$91.99**

Table 6: 5.5% Discount Rate

	Net Benefit (1000s of $)		Net Benefit/AF	
	Peace I vs. Baseline	*Peace II vs. Baseline*	*Peace I vs. Baseline*	*Peace II vs. Baseline*
City of Chino	$17,681	$84,906	$27.27	$130.95
City of Chino Hills	$11,108	$65,916	$18.73	$111.13
City of Ontario	$38,234	$207,227	$21.75	$117.86
City of Upland	$8,595	$39,560	$15.90	$73.16
Cucamonga Valley Water District	$54,862	$247,990	$29.77	$134.57
Fontana Union Water Co.	$4,231	$26,907		
Monte Vista Water District	$6,265	$36,087	$17.95	$103.42
San Antonio Water Company	$997	$6,343		
Jurupa CSD	$13,877	$31,426	$15.71	$35.58
City of Pomona	$7,315	$60,400	$9.92	$81.90
Total	**$163,165**	**$806,761**	**$17.77**	**$87.87**

Table 7: 10% Conservation

	Net Benefit (1000s of $)		Net Benefit/AF	
	Peace I vs. Baseline	*Peace II vs. Baseline*	*Peace I vs. Baseline*	*Peace II vs. Baseline*
City of Chino	$18,131	$88,819	$31.07	$152.20
City of Chino Hills	$13,070	$70,172	$24.48	$131.45
City of Ontario	$44,196	$223,937	$27.93	$141.52
City of Upland	$8,602	$39,805	$17.68	$81.80
Cucamonga Valley Water District	$64,718	$268,848	$39.02	$162.10
Fontana Union Water Co.	$4,989	$30,656		
Monte Vista Water District	$6,205	$37,920	$19.76	$120.75
San Antonio Water Company	$1,176	$7,227		
Jurupa CSD	$15,189	$33,707	$19.11	$42.40
City of Pomona	$6,788	$63,259	$10.23	$95.30
Total	**$183,064**	**$864,350**	**$22.07**	**$104.22**

Table 8: 50% Increase in Recycled Water Price

	Net Benefit (1000s of $)		Net Benefit/AF	
	Peace I vs. Baseline	*Peace II vs. Baseline*	*Peace I vs. Baseline*	*Peace II vs. Baseline*
City of Chino	$20,294	$88,913	$31.30	$137.13
City of Chino Hills	$12,217	$69,270	$20.60	$116.78
City of Ontario	$42,547	$220,779	$24.20	$125.57
City of Upland	$9,442	$42,215	$17.46	$78.07
Cucamonga Valley Water District	$60,667	$262,234	$32.92	$142.30
Fontana Union Water Co.	$4,839	$30,268		
Monte Vista Water District	$7,025	$39,277	$20.13	$112.56
San Antonio Water Company	$1,141	$7,136		
Jurupa CSD	$15,772	$31,962	$17.86	$36.19
City of Pomona	$8,189	$66,517	$11.10	$90.19
Total	**$182,133**	**$858,571**	**$19.84**	**$93.51**

Attachment D

October 25, 2007

Attachment "D"

2007 SUPPLEMENT TO THE IMPLEMENTATION PLAN OPTIMUM BASIN MANAGEMENT PROGRAM FOR THE CHINO BASIN

INTRODUCTION

This document describes the supplement to the implementation plan for the Chino Basin Optimum Basin Management Program (OBMP), as determined through the 2007 "Peace II" process.

PROGRAM ELEMENT 1 DEVELOP AND IMPLEMENT COMPREHENSIVE MONITORING PROGRAM

A. Production Monitoring Program

All active wells (except for minimum user wells) are now metered. Watermaster reads the production data from the meters on a quarterly basis and enters these data into Watermaster's relational database.

B. Surface Water Discharge and Quality Monitoring

Water Quality and Quantity in Recharge Basins. Watermaster measures the quantity and quality of storm and supplemental water entering the recharge basins. Pressure transducers or staff gauges are used to measure water levels during recharge operations. In addition to these quantity measurements, imported water quality values for State Water Project water are obtained from the Metropolitan Water District of Southern California (MWDSC) and recycled water quality values for the RP1 and RP4 treatment plant effluents are obtained from IEUA. Watermaster monitors the storm water quality in the eight major channels (San Antonio, West Cucamonga, Cucamonga, Deer Creek, Day Creek, San Sevaine, West Fontana, and DeClez) usually after each major storm event. Combining the measured flow data with the respective water qualities enables the

calculation of the blended water quality in each recharge basin, the "new yield" to the Chino Basin, and the adequate dilution of recycled water.

Surface Water Monitoring in Santa Ana River (SAR). Watermaster measures the discharge of the river and selected water quality parameters to determine those reaches of the SAR that are gaining flow from Chino Basin and/or, conversely, those reaches that are losing flow into the Chino Basin. These bi-weekly flow and water quality measurements are combined with discharge data from permanent USGS and Orange County Water District (OCWD) stream gauges and discharge data from publicly owned treatment works (POTWs). These data are used in groundwater modeling to assess the extent of hydraulic control.

HCMP Annual Report

In January 2004, the RWQCB amended the Water Quality Control Plan (Basin Plan) for the Santa Ana River Basin to incorporate an updated total dissolved solids (TDS) and nitrogen (N) management plan. The Basin Plan Amendment includes both "antidegradation" and "maximum benefit" objectives for TDS and nitrate-nitrogen for the Chino and Cucamonga groundwater management zones. The application of the "maximum benefit" objectives relies on Watermaster and the IEUA's implementation of a specific program of projects and requirements, which are an integral part of the OBMP. On April 15, 2005, the RWQCB adopted resolution R8-2005-0064; thus approving the Surface Water Monitoring Program and Groundwater Monitoring Program in support of maximum benefit commitments in the Chino and Cucamonga Basins. Watermaster and the IEUA completed the 2006 Annual Report, which summarizes the results for those two programs, and submitted it to the RWQCB on April 16, 2007 in partial fulfillment of maximum benefit commitments.

Chino Basin Recycled Water Groundwater Recharge Program

The IEUA, Watermaster, Chino Basin Water Conservation District, and San Bernardino County Flood Control District jointly sponsor the Chino Basin Recycled Water Groundwater Recharge Program. This is a comprehensive water supply program to enhance water supply reliability and improve the groundwater quality in local drinking water wells throughout the Chino Groundwater Basin by increasing the recharge of stormwater, imported water, and recycled water. The recharge program is regulated under RWQCB Order No. R8-2005-0033 and Monitoring and Reporting Program No. R8-2005-0033.

Monitoring Activities. Watermaster and the IEUA collect weekly and bi-weekly water quality samples from basins that are actively recharging recycled water and from lysimeters installed within those basins. Monitoring wells located down gradient of the recharge basins are sampled every two weeks during the reporting period for a total of about 100 samples.

Construction Activities. Lysimeters and monitoring wells associated with the RP-3, DeClez, and Ely Basins were installed in fiscal year (FY) 2006/07.

C. Ground Level Monitoring Program

Watermaster developed a multifaceted land surface monitoring program to develop data for a long-term management plan for land subsidence in Management Zone 1 (MZ-1). The monitoring program consisted of three main elements:

- An aquifer system monitoring facility consisting of multiple depth piezometers and a dual bore extensometer.
- The application of synthetic aperture radar interferometry (InSAR) to measure historical land surface deformation.
- Benchmark surveys to measure land surface deformation, "ground truth" the InSAR data, and evaluate effectiveness of the long term management plan.

Following two years of data collection and analysis, Watermaster submitted the MZ-1 Summary Report in October 2005, which contained Guidance Criteria to minimize subsidence and fissuring. The Guidance Criteria included a listing of Managed Wells and their owners subject to the criteria, a map of the so-called Managed Area, an initial threshold water level (Guidance Level) of 245 feet below the top of the PA-7 well casing, and a plan for ongoing monitoring and notification. Since October 2005, the MZ-1 Summary Report and the Guidance Criteria contained therein have been discussed extensively by the parties involved, and were adopted by the Watermaster Board at its May 2006 Meeting. The final MZ-1 Subsidence Management Plan was adopted by the Watermaster Board at its June 2007 Meeting, was subsequently revised, and was submitted to the Court for approval at a hearing on November 15, 2007.

The MZ-1 monitoring program continues unabated. Water level monitoring expanded to the central regions of MZ-1 with the installation of transducers/data loggers at selected wells owned by the City of Chino, the Monte Vista Water District, and the City of Pomona. This expansion of the water level monitoring program is the initial effort to better understand the mechanisms behind ongoing land subsidence in this region.

PROGRAM ELEMENT 2 -- DEVELOP AND IMPLEMENT COMPREHENSIVE RECHARGE PROGRAM

INTRODUCTION

Construction on the Chino Basin Facilities Improvement Project (CBFIP) Phase I was completed by December 31, 2005 at a cost of $38M; 50% from a SWRCB Proposition 13 Grant, and 25% each from Watermaster and the IEUA. A CBFIP Phase II list of projects was developed by Watermaster and the IEUA, including monitoring wells, lysimeters, recycled water connections, SCADA system expansions, three MWDSC turnouts, and berm heightening and hardening. At a cost of approximately $15M, these Phase II facilities will be financed through a 50% Grant from DWR and 25% each from Watermaster and the IEUA.

In FY 2005-2006, the CBFIP Phase I facilities were able to recharge 49,000 AF of storm and supplemental water. By the start of FY 2009-2010, most of the basins will be able to operate on a 12 months per year basis with combinations of storm, imported, and recycled water, with occasional downtime for silt and organic growth removal. Operations and basin planning are coordinated through the Groundwater Recharge Coordinating Committee (GRCC) which meets monthly.

Update to the Recharge Master Plan. The Recharge Master Plan will be updated as frequently as necessary and not less than every five (5) years, to reflect an appropriate schedule for planning, design, and physical improvements as may be required to offset the controlled mining at the end of the Peace Agreement and the end of forgiveness for Desalter replenishment.

Coordination. Watermaster will ensure that the members of the Appropriative Pool will coordinate the development of their respective Urban Water Management Plans and Water Supply Master Plans with Watermaster as follows.

(a) Watermaster will obtain from each Appropriator that prepares an Urban Water Management Plan and Water Supply Plan copies of their existing and proposed plans.

(b) Watermaster will use the Plans in evaluating the adequacy of the Recharge Master Plan and other OBMP Implementation Plan program elements.

(c) Each Appropriator will provide Watermaster with a draft in advance of adopting any proposed changes to their Urban Water Management Plans and in advance of adopting any material changes to their Water Supply Master Plans respectively in accordance with the customary notification routinely provided to other third parties to offer Watermaster a reasonable opportunity to provide informal input and informal comment on the proposed changes.

(d) Any party that experiences the loss or the imminent threatened loss of a material water supply source will provide reasonable notice to Watermaster of the condition and the expected impact, if any, on the projected groundwater use.

Suspension. To ameliorate any long-term risks attributable to reliance upon un-replenished groundwater production by the Desalters, the annual availability of any portion of the 400,000 acre-feet set aside for forgiveness, is expressly subject to Watermaster making an annual finding it is in substantial compliance with the revised Watermaster Recharge Master Plan pursuant to Paragraph 7.3 above.

Acknowledgment re 6,500 Acre-Foot Supplemental Recharge. The Parties have made the following acknowledgments regarding the 6,500 Acre-Foot Supplemental Recharge:

(a) A fundamental premise of the Physical Solution is that all water users dependent upon Chino Basin will be allowed to pump sufficient waters from the Basin to meet their requirements. To promote the goal of equal access to groundwater within all areas and sub-areas of the Chino Basin, Watermaster has committed to use its best efforts to direct recharge relative to production in each area and sub-area of the Basin and to achieve long-term balance between total recharge and discharge. The Parties acknowledge that to assist Watermaster in providing for recharge, the Peace Agreement sets forth a requirement for Appropriative Pool purchase of 6,500 acre-feet per year of Supplemental Water for recharge in Management Zone 1 (MZ1). The purchases have been credited as an addition to Appropriative Pool storage accounts. The water recharged under this program has not been accounted for as Replenishment water.

(b) Watermaster was required to evaluate the continuance of this requirement in 2005 by taking into account provisions of the Judgment, Peace Agreement and OBMP, among all other relevant factors. It has been determined that other obligations in the Judgment and Peace Agreement, including the requirement of hydrologic balance and projected replenishment obligations, will provide for sufficient wet-water recharge to make the separate commitment of Appropriative Pool purchase of 6,500 acre-feet unnecessary. Therefore, because the recharge target as described in the Peace Agreement has been achieved, further purchases under the program will cease and Watermaster will proceed with operations in accordance with the provisions of paragraphs (c), (d) and (e) below.

(c) The parties acknowledge that, regardless of Replenishment obligations, Watermaster will independently determine whether to require wet-water recharge within MZ1 to maintain hydrologic balance and to provide equal access to groundwater in accordance with the provisions of this Section 8.4 and in a manner consistent with the Peace Agreement, OBMP and the Long Term Plan for Subsidence. Watermaster will conduct its recharge in a manner to provide hydrologic balance within, and will emphasize recharge in MZ1. Accordingly, the Parties acknowledge and agree that each year Watermaster shall continue to be guided in the exercise of its discretion concerning recharge by the principles of hydrologic balance.

(d) Consistent with its overall obligations to manage the Chino Basin to ensure hydrologic balance within each management zone, for the duration of the Peace Agreement (until June of 2030), Watermaster will ensure that a minimum of 6,500 acre-feet of wet water recharge occurs within MZ1 on an annual basis. However, to the extent that water is unavailable for recharge or there is no replenishment obligation in any year, the obligation to recharge 6,500 acre-feet will accrue and be satisfied in subsequent years.

(1) Watermaster will implement this measure in a coordinated manner so as to facilitate compliance with other agreements among the parties, including but not limited to the Dry-Year Yield Agreements.

(2) In preparation of the Recharge Master Plan, Watermaster will consider whether existing groundwater production facilities owned or controlled by producers within MZ1 may be used in connection with an aquifer storage and recovery ("ASR") project so as to further enhance recharge in specific locations and to otherwise meet the objectives of the Recharge Master Plan.

(e) Five years from the effective date of the Peace II Measures, Watermaster will cause an evaluation of the minimum recharge quantity for MZ1. After consideration of the information developed in accordance with the studies conducted pursuant to paragraph 3 below, the observed experiences in complying with the Dry Year Yield Agreements as well as any other pertinent information, Watermaster may increase the minimum requirement for MZ1 to quantities greater than 6,500 acre-feet per year. In no circumstance will the commitment to recharge 6,500 acre-feet be reduced for the duration of the Peace Agreement.

Hydraulic Control. In accordance with the purpose and objective of the Physical Solution to "establish a legal and practical means for making the maximum reasonable beneficial use of the waters of the Chino Basin" (paragraph 39) and the identified Basin Management Parameters, Watermaster will manage the Basin to secure Hydraulic Control through controlled overdraft for a period of approximately 23 (twenty-three) years (Re-Operation). Hydraulic Control ensures that the water management activities in the Chino North Management Zone do not cause materially adverse impacts to the beneficial uses of the Santa Ana River downstream of Prado Dam. "Hydraulic Control" means the reduction of groundwater discharge from the Chino North Management Zone to the Santa Ana River to de minimus quantities. The Chino North Management Zone is more fully described and set forth in Exhibit 1 to this Appendix I.

Re-Operation. Independent of Watermaster determinations regarding Operating Safe Yield and without effect on or regard for the parties' respective rights thereto in any year, Re-Operation of the Basin through the managed withdrawal of groundwater from the Basin is required to achieve and maintain Hydraulic Control. Given the expected water quality, increased yield and economic benefits associated with Hydraulic Control, a Re-Operation through coordinated and controlled overdraft is a prudent and efficient use of the Basin resources *to the extent* groundwater is required to achieve and maintain Hydraulic Control. "Re-operation" means the potential increase in the accumulated overdraft from 200,000 acre-feet previously authorized under Exhibit I over the period 1978 through 2017 to 600,000 acre-feet through 2030, with the 400,000 acre-feet increase being expressly allocated to meet the replenishment obligation of the Desalters. Accordingly, a cumulative change in storage of up to 400,000 acre-feet greater than initially authorized by the original Judgment may result. However, the use of

water pumped pursuant to Re-operation is subject to the following limitations:

(a) Future Desalter Groundwater Production Facilities. Future Desalter groundwater production facilities will emphasize Production from the southern end of the Basin.

(b) The Material Physical Injury. Controlled overdraft must not cause material physical injury to any Party or the Basin.

(c) Proposed Schedule. An initial schedule for Re-Operation, including annual and cumulative quantities to be pumped through Re-Operation will be developed. Watermaster may modify the proposed schedule from time to time as it may be prudent under the circumstances, but only after first obtaining Court approval.

(d) Annual Accounting. Watermaster will prepare an annual summary accounting of the cumulative total of groundwater production and desalting from all authorized desalters and other activities authorized by the Optimum Basin Management Program in a schedule that: (i) identifies the total change in groundwater storage that will result from the Re-Operation; and (ii) characterizes and accounts for all water that is projected to be produced by all authorized desalters.

(e) Recharge and Replenishment Compliance. Watermaster must be in substantial compliance with its then existing recharge and replenishment plans and obligations, and will make an annual finding whether or not it is in compliance.

(f) Replenishment. Groundwater produced by Desalters in connection with Re-Operation to achieve Hydraulic Control will be replenished through, inter alia, the water made available through controlled overdraft.

(g) Suspension. Re-Operation and Watermaster's apportionment of controlled overdraft will not be suspended in the event that Hydraulic Control is secured in any year *before* the full 400,000 acre-feet has been produced so long as: (i) Watermaster has prepared, adopted and the Court has approved a contingency plan that establishes conditions and protective measures to avoid Material Physical Injury and that equitably addresses this contingency, and (ii) Watermaster continues to demonstrate a credible material progress toward obtaining sufficient capacity to recharge sufficient quantities of water to cause the Basin to return to a new equilibrium at the conclusion of the Re-Operation.

(h) Definition of Desalters. "Desalters" means the Chino I Desalter, the Chino I Expansion, the Chino II Desalter and Future Desalters, consisting of all the capital facilities' and processes that remove salt from the Basin water, including extraction wells, transmission facilities for delivery of groundwater to the Desalter. Desalter treatment and delivery facilities for the desalted water include pumping and storage facilities and treatment and

disposal capacity in the Santa Ana Regional Interceptor.

PROGRAM ELEMENT 3 DEVELOP AND IMPLEMENT WATER SUPPLY PLAN FOR THE IMPAIRED AREAS OF THE BASIN, PROGRAM ELEMENT 5 DEVELOP AND IMPLEMENT REGIONAL SUPPLEMENTAL WATER PROGRAM

Construction on the Chino I Desalter Expansion and the Chino II Desalter facilities was completed in February 2006 and an application has been made for $1.6 M in Proposition 50 funds to add 8 MGD of ion exchange capacity to the Chino II Desalter. As currently configured, the Chino I Desalter provides 2.6 MGD of treated (air stripping for VOC removal) water from Wells Nos. 1-4, 4.9 MGD of treated (ion exchange for nitrate removal) water from Wells Nos. 5-15, and 6.7 MGD of treated (reverse osmosis for nitrate and TDS removal) water from Wells Nos. 5-15 for a total of 14.2 MGD (16,000 AFY). The Chino II Desalter provides 4.0 MGD of ion exchange treated water and 6.0 MGD of reverse osmosis treated water from 8 additional wells for a total of 10.0 MGD (11,000 AFY).

Consultants to the City of Ontario and Western Municipal Water District recently completed their evaluation of three alternative configurations for expansion of the Chino Desalters. Their results are presented in the report "Chino Desalter Phase 3 Alternatives Evaluation," dated May 2007. Essentially, they found that the preferred alternative would be to construct a 10.5 mgd (10,600 AFY) expansion to the existing Chino II Desalter, with raw water coming from the existing Wells Nos. 13, 14, and 15. A new Chino Creek Well Field, required for hydraulic control of the basin, would replace the raw water lost from the Wells Nos. 13, 14, and 15. Negotiations are currently underway between the City of Ontario, WMWD, and JCSD to determine capacity allocations and cost sharing for the new facilities.

PROGRAM ELEMENT 4 DEVELOP AND IMPLEMENT COMPREHENSIVE GROUNDWATER MANAGEMENT PLAN FOR MANAGEMENT ZONE 1 (MZ1)

The occurrence of subsidence and fissuring in Management Zone 1 is not acceptable and should be reduced to tolerable levels or abated. The OBMP calls for a management plan to reduce or abate the subsidence and fissuring problems to the extent that it may be caused by production in MZ1.

In October 2005, Watermaster completed the MZ-1 Summary Report, including the Guidance Criteria. Since then the impacted parties have had numerous meetings to transform the Summary Report into a Long-term Management Plan. The Summary Report and the Guidance Criteria

were adopted by the Watermaster Board in May 2006, and the Long-term Management Plan was adopted in June 2007, was subsequently revised, and was submitted to the Court for approval at a hearing on November 15, 2007..

PROGRAM ELEMENT 6 DEVELOP AND IMPLEMENT COOPERATIVE PROGRAMS WITH THE REGIONAL BOARD AND OTHER AGENCIES TO IMPROVE BASIN MANAGEMENT, and PROGRAM ELEMENT 7 SALT MANAGEMENT PROGRAM

On going discussions are being held with the RWQCB and the San Bernardino County Department of Airports in order to determine the engineering solution and costs for remediating the TCE plume at the Chino Airport. The consulting engineer for the SBCDA is currently characterizing the extent of off-site contamination and investigating remedial alternatives. For the Ontario Airport (OIA) plume, the Potentially Responsible Parties (PRPs) have been working with Watermaster to quantify the depth and extent of the TCE plume. At the Stringfellow site, the consultants to DHS have been investigating whether the perchlorate plume from the site adds to the existing perchlorate levels in the Santa Ana River, or whether the perchlorate plume is diverted towards the Chino II Desalter well field. Lastly, Watermaster continues to monitor the activities of General Electric's (GE) remediation at the Flat Iron facility and their efforts to develop a new location for recharge of their treated effluent.

MZ-3 Monitoring Program.
The former Kaiser plume has been incorporated into an overall monitoring program for the MZ-3 area. The MZ-3 monitoring program is also assessing the groundwater quality impairment from total dissolved solids (TDS), nitrate, and perchlorate. Quarterly samples will now be collected from all 4 wells to help recharacterize the Kaiser plume.

Ontario International Airport (OIA) Volatile Organic Chemical Plume.
Watermaster has provided water quality, water level, and well construction data from more than 400 private wells and 200 public wells to the RWQCB, which in turn forwarded the database to the PRPs pursuant to their request. Subsequently the PRPs submitted their sampling work plan and health and safety plan for the well installation and sampling.

Chino Airport VOC Plume.
Watermaster met with the RWQCB, the San Bernardino County Department of Airports, and their consultant Tetra Tech on April 18, May 25, and June 26, 2007 to discuss a joint remediation of the VOC plume from the airport. Such a joint remediation would help address other issues in the southwestern portion of Chino Basin such as maintenance of hydraulic control and the provision of high quality drinking water in an area of increasing demand. As a result of these meetings, Watermaster agreed to provide a database containing well construction information, water quality, water levels, and production for wells located southwest of the Chino airport. In

addition, Watermaster provided results from sampling all the wells in this location to provide up-to-date analytical data on all the possible contaminants in these wells. These data are being reviewed with Tetra Tech to begin the engineering of appropriate remedial actions.

GE Flat Iron Remediation.
Finally, with respect to the GE Flat Iron remediation, GE conducted a screening of options for the disposal of treated effluent from their operational pump and treat facilities. Currently, GE discharges their effluent into the Ely Basins, where it percolates back into the groundwater. However, this operation limits Watermaster's ability to recharge recycled water into the Ely Basins and, consequently, Watermaster has asked that GE develop alternative disposal means. As a result of their screening, GE has decided to investigate, in detail, the construction of groundwater injection wells that would be operated in conjunction with their own recharge basin. GE completed their planning in December 2006 and began detailed design based upon the RWQCB's approval of the concept.

TDS and Nitrogen Monitoring Pursuant to the 2004 Basin Plan Amendment
Pursuant to the 2004 Basin Plan Amendment and the Watermaster/IEUA permit to recharge recycled water, Watermaster and the IEUA have conducted and will continue to conduct groundwater and surface water monitoring programs. Quarterly HCMP reports that summarize data collection efforts will continue to be submitted to the RWQCB.

PROGRAM ELEMENT 8 DEVELOP AND IMPLEMENT GROUNDWATER STORAGE MANAGEMENT PROGRAM, PROGRAM ELEMENT 9 DEVELOP AND IMPLEMENT STORAGE AND RECOVERY PROGRAMS

Currently, there is only one groundwater storage program approved in the Chino Basin: the 100,000 acre-ft Dry-Year Yield Program with the Metropolitan Water District of Southern California (MWD). The MWD, IEUA, and Watermaster are considering expanding this program by an additional 50,000 acre-ft to 150,000 acre-ft over the next few years. Watermaster is also considering an additional 150,000 acre-ft in programs with non-party water agencies.

Attachment E

Attachment "E"

Desalter Replenishment with Most Rapid Depletion of the Re-Operation Account

(acre-ft/yr)

Fiscal Year	Desalter Pumping	New Yield	Re-Operation			Residual Replenishment Obligation
			Replenishment Allocation for Desalter III	Replenishment Allocation to CDA	Balance	
					400,000	0
2006 / 2007	28,700	8,610	0	20,090	379,910	0
2007 / 2008	28,700	8,610	0	20,090	359,820	0
2008 / 2009	28,700	8,610	0	20,090	339,730	0
2009 / 2010	28,700	8,610	0	20,090	319,640	0
2010 / 2011	28,700	8,610	0	20,090	299,550	0
2011 / 2012	28,700	8,610	0	20,090	279,460	0
2012 / 2013	34,050	10,215	5,000	18,835	255,625	0
2013 / 2014	39,400	11,820	10,000	17,580	228,045	0
2014 / 2015	39,400	11,820	10,000	17,580	200,465	0
2015 / 2016	39,400	11,820	10,000	17,580	172,885	0
2016 / 2017	39,400	11,820	10,000	17,580	145,305	0
2017 / 2018	39,400	11,820	10,000	15,305	120,000	2,275
2018 / 2019	39,400	11,820	10,000		110,000	17,580
2019 / 2020	39,400	11,820	10,000		100,000	17,580
2020 / 2021	39,400	11,820	10,000		90,000	17,580
2021 / 2022	39,400	11,820	10,000		80,000	17,580
2022 / 2023	39,400	11,820	10,000		70,000	17,580
2023 / 2024	39,400	11,820	10,000		60,000	17,580
2024 / 2025	39,400	11,820	10,000		50,000	17,580
2025 / 2026	39,400	11,820	10,000		40,000	17,580
2026 / 2027	39,400	11,820	10,000		30,000	17,580
2027 / 2028	39,400	11,820	10,000		20,000	17,580
2028 / 2029	39,400	11,820	10,000		10,000	17,580
2029 / 2030	39,400	11,820	10,000		0	17,580
Totals	876,050	262,815	175,000	225,000		213,235

Attachment "E"

Desalter Replenishment with Proportional Depletion of the Re-Operation Account

(acre-ft/yr)

Fiscal Year	Desalter Pumping	New Yield	Re-Operation			Residual Replenishment Obligation
			Replenishment Allocation for Desalter III	Replenishment Allocation to CDA	Balance	
					400,000	0
2006 / 2007	28,700	8,610	0	7,371	392,629	12,719
2007 / 2008	28,700	8,610	0	7,371	385,258	12,719
2008 / 2009	28,700	8,610	0	7,371	377,886	12,719
2009 / 2010	28,700	8,610	0	7,371	370,515	12,719
2010 / 2011	28,700	8,610	0	7,371	363,144	12,719
2011 / 2012	28,700	8,610	0	7,371	355,773	12,719
2012 / 2013	34,050	10,215	5,000	8,745	342,028	10,090
2013 / 2014	39,400	11,820	10,000	10,119	321,908	7,461
2014 / 2015	39,400	11,820	10,000	10,119	301,789	7,461
2015 / 2016	39,400	11,820	10,000	10,119	281,670	7,461
2016 / 2017	39,400	11,820	10,000	10,119	261,551	7,461
2017 / 2018	39,400	11,820	10,000	10,119	241,431	7,461
2018 / 2019	39,400	11,820	10,000	10,119	221,312	7,461
2019 / 2020	39,400	11,820	10,000	10,119	201,193	7,461
2020 / 2021	39,400	11,820	10,000	10,119	181,073	7,461
2021 / 2022	39,400	11,820	10,000	10,119	160,954	7,461
2022 / 2023	39,400	11,820	10,000	10,119	140,835	7,461
2023 / 2024	39,400	11,820	10,000	10,119	120,715	7,461
2024 / 2025	39,400	11,820	10,000	10,119	100,596	7,461
2025 / 2026	39,400	11,820	10,000	10,119	80,477	7,461
2026 / 2027	39,400	11,820	10,000	10,119	60,357	7,461
2027 / 2028	39,400	11,820	10,000	10,119	40,238	7,461
2028 / 2029	39,400	11,820	10,000	10,119	20,119	7,461
2029 / 2030	39,400	11,820	10,000	10,119	0	7,461
Totals	876,050	262,815	175,000	225,000		213,235

Attachment F

September 21, 2007

ATTACHMENT "F"

DISCRETIONARY ACTIONS TO AMEND WATERMASTER RULES AND REGULATIONS

Pursuant to the Judgment, the Peace Agreement and Watermaster Rules and Regulations, Watermaster will undertake the following actions:

I. Agricultural Pool Reallocation

A. Section 6.3(c) of the Watermaster Rules and Regulations shall be amended to read:

"(c) In the event actual Production from the Agricultural Pool does not exceed 82,800 acre-feet in any one year or 414,000 acre-feet in any five years but total allocation from all the uses set forth in section 6.3(a) above exceeds 82,800 in any year, the amount of water made available to the members of the Appropriative Pool under section 6.3(a) shall be reduced pro rata in proportion to the benefits received by each member of the Appropriative Pool through such allocation. This reduction shall be accomplished according to the following procedure:

1. All of the amounts to be made available under 6.3(a) shall be added together. This amount shall be the "Potential Acre-Feet Available" for Reallocation.

2. Each Appropriative Pool member's requested share of the Potential Acre-Feet Available for Reallocation shall be determined. This share shall be expressed as a percentage share of the Potential Acre-Feet Available for Reallocation.

3. Each Appropriative Pool member's share of the Potential Acre-Feet Available for Reallocation shall be reduced pro rata according to the percentage determined in 2 above."

B. Section 6.3(d) of the Watermaster Rules and Regulations shall be added to read:

"(d) In the event actual Production from the Agricultural Pool does not exceed 82,800 acre-feet in any one year or 414,000 acre-feet in any five years and total Production from all the uses set forth in section 6.3(a) above does not exceed 82,800 acre-feet in any year, the amount of surplus water made available to the members of the Appropriative Pool shall be allocated according to the formula described in 6.3(c)."

C. Section 9.6 of the Watermaster Rules and Regulations will be amended to include an articulated rule of construction that: "This provision will be construed by as permitting Watermaster to accept new voluntary agreements only to the extent that such voluntary agreements occur within areas eligible for conversion as described in Attachment 1 to the Judgment, previously added to the Judgment as an amendment by Order of the Court dated November 17, 1995."

D. By Resolution, Watermaster will ratify all current Watermaster accounting practices with regard to Land Use Conversions, Assignments, voluntary agreements, Early Transfer, and reallocation of surplus Agricultural Pool water and continue to implement such provisions in a consistent manner.

II. Storage

A. By Resolution, Watermaster has previously established a uniform loss percentage for all water held in storage at 2 percent, until it may be recalculated based upon the best available scientific information.

B. Watermaster will impose a uniform loss against all water in storage in an amount of 2 (two) percent where the Party holding the storage account: (i) has previously contributed to the implementation of the OBMP as a Party to the Judgment, is in compliance with their continuing covenants under the Peace Agreement or in lieu thereof they have paid or delivered to Watermaster "financial equivalent" consideration to offset the cost of past performance prior to the implementation of the OBMP and (ii) promised continued future compliance with Watermaster Rules and Regulations. Where a Party has not satisfied the requirement of B(i) and B(ii) Watermaster will assess a 6 (six) percent loss. Following a Watermaster determination that Hydraulic Control has been achieved, Watermaster will assess losses of less than one 1 percent where the Party satisfies B(i) and B(ii).

C. Section 8.1(f)(iii) a) and b) of Watermaster Rules and Regulations will be amended to substitute the date of July 1, 2010 for July 1, 2005.

D. Section 8.2(a), (b), (g), (h) of Watermaster Rules and Regulations will be amended to substitute the date of July 1, 2010 for July 1, 2005.

III. Errors

A. A new Section 3.3. of Watermaster Rules and Regulations and shall read as follows:

"3.3 Error Corrections. All reports or other information submitted to Watermaster by the parties shall be subject to a four-year limitations period regarding the correction of errors contained in such submittals. In addition, all information generated by Watermaster shall be subject to the same four-year

limitations period. All corrections to errors shall apply retroactively for no more than four years."

IV. Further Conforming Changes.

A. After consultation with the stakeholders, Watermaster may make further conforming changes to its Rules and Regulations to eliminate any inconsistencies with the Peace II measures and to more effectively implement the measures from time to time.

Date: _____ _____

For CHINO BASIN WATERMASTER

Attachment G

September 21, 2007

Attachment "G"

PURCHASE AND SALE AGREEMENT FOR THE PURCHASE OF WATER BY WATERMASTER FROM OVERLYING (NON-AGRICULTURAL) POOL

THIS AGREEMENT (Agreement) is dated 27th day of September, 2007, regarding the Chino Groundwater Basin.

RECITALS

WHEREAS, the Peace Agreement expressly authorized a transfer of water from the Overlying (Non-Agricultural) Pool to Watermaster for use as replenishment for the Desalters and for use in connection with a Storage and Recovery Program;

WHEREAS, Watermaster is evaluating its replenishment needs under the Judgment and several Storage and Recovery opportunities;

WHEREAS, Watermaster desires to purchase and the Overlying (Non-Agricultural) Pool desires to sell, all of the Non-Agricultural Pool water held in storage as of June 30, 2007;

WHEREAS, Watermaster is proposing an amendment to the Overlying (Non-Agricultural) Pool Pooling Plan set forth in Exhibit "G" to the Judgment whereby members of the Pool may offer water for purchase by Watermaster and thence the members of the Appropriative Pool under the process set forth therein;

NOW THEREFORE, in consideration of the mutual promises specified herein and by conditioning their performance under this Agreement upon the conditions precedent set forth herein, and for other good and valuable consideration, the Parties agree as follows:.

A. **Peace Agreement Transfer.** This purchase and sale agreement is in accordance with Section 5.3(e) of the Peace Agreement that provides that "parties to the Judgment with rights within the Non-Agricultural (Overlying) Pool shall have the additional rights to Transfer their rights to Watermaster for the purposes of Replenishment for a Desalter or for a Storage and Recovery Program."

B. **Quantity**. The quantity of water being made available to Watermaster by the Non-Agricultural (Overlying) Pool on a one-time basis ("Storage Transfer Quantity") is equivalent to the total quantity of water held in storage by the members of the Overlying (Non-Agricultural) Pool held in storage on June 30, 2007 ("Storage Quantity"), less a ten percent dedication for the purpose of Desalter Replenishment, less the quantity of water transferred pursuant to paragraph I below ("Special Transfer Quantity").

C. **Notice.** Within twenty-four months of the final Court approval of this Agreement ("Effective Date"), and only with the prior approval of the Appropriative Pool, Watermaster will provide written **Notice of Intent to Purchase** the Non-Agricultural (Overlying) Pool water pursuant to Section 5.3(a) of the Peace Agreement, which therein identifies whether such payment will be in connection with Desalter Replenishment or a Storage and Recovery Program.

D. **Payment.** Commencing thirty (30) calendar days from the Notice of Intent to Purchase ("Payment Date") Watermaster will pay to the Non-Agricultural Overlying Pool for each acre-foot of the Storage Transfer Quantity in accordance with the following schedule as the schedule is adjusted for inflation by the consumers price index ("cpi") for San Bernardino County from May 31, 2006 until the Payment Date.:

1. $215 times 1/4 of the Storage Transfer Quantity on the Payment Date.
2. $220 times 1/4 of the Storage Transfer Quantity on the first anniversary of the Payment Date.
3. $225 times 1/4 of the Storage Transfer Quantity on the second anniversary of the Payment Date
4. $230 time 1/4 of the Storage Transfer Quantity on the third anniversary of the Payment Date.

However, all payments provided for herein, including inflation adjustments, are subject to an express price cap and will not exceed ninety-two (92) percent of the then prevailing MWD replenishment rate in any year.

E. **Dedication to Desalter Replenishment.** Upon Watermaster's issuance of its written **Notice of Intent to Purchase**, and Watermaster's tender of its initial payment on the Payment Date, ten (10) percent of the Storage Quantity will be dedicated for replenishment of Desalter production without compensation. Watermaster will receive but will not pay for this dedication.

F. **Use and Distribution.** Watermaster will take possession of the water made available pursuant to this Agreement and make use of and distribute the water made available in a manner consistent with Section 5.3(e) of the Peace Agreement.

G. **Condition Precedent.** This Agreement and the Parties performance hereunder are expressly conditioned upon Court approval of this Agreement.

H. **Early Termination.** This Agreement will expire and be of no further force and effect if: Watermaster does not issue its **Notice of Intent to Purchase** in accordance with Paragraph D above within twenty-four (24) months of Court approval. Upon Watermaster's failure to satisfy the condition subsequent, the rights of the Non-Agricultural (Overlying) Pool will remain unaffected and without prejudice as result of their having executed this Agreement except that in the event of Early Termination, the Storage Transfer Quantity, will then be made available for purchase by Watermaster and thence the members of the Appropriative Pool in accordance with Paragraph 9.(iv) of Amended Exhibit G, the Overlying (Non-Agricultural) Pool,

Pooling Plan, including the requirement of a ten percent dedication towards Desalter replenishment.

I. **One Time Transfer in Furtherance of the Physical Solution and in Aid of Desalter Replenishment ("Special Transfer Quantity").** In consideration of the Overlying (Non-Agricultural) Pool members' irrevocable commitment made herein and it the Peace II Measures Watermaster will purchase and immediately make available the quantity of 8,530 acre-feet (less a ten percent dedication to Watermaster for Desalter Production) to the San Antonio Water Company (SAWCO) and Vulcan Materials, a member of the Overlying (Non-Agricultural) Pool under terms established as between those parties. This One Time Transfer is in addition to and without prejudice to the discretionary rights of the members of the Overlying (Non-Agricultural) Pool to make available and Watermaster and members of the Appropriative Pool to purchase water as Physical Solution transfers. No member of the Appropriative Pool, other than SAWCO assumes any responsibility for the purchase of this Special Transfer Quantity from Vulcan.

IN WITNESS THEREOF, the Parties hereto have set forth their signatures as of the date written below:

Dated: NON-AGRICULTURAL OVERLYING POOL

By _____

Attachment H

September 21, 2007

Attachment "H"

JUDGMENT AMENDMENT
to Paragraph 8

The Paragraph 8 of the Judgment shall be amended to read as follows:

"8. The parties listed in Exhibits "C" and "D" are the owners or in possession of lands which overlie Chino Basin. As such, said parties have exercised overlying water rights in Chino Basin. All overlying rights owned or exercised by parties listed in Exhibits "C" and "D" have, in the aggregate, been limited by prescription except to the extent such rights have been preserved by self-help by said parties. Aggregate preserved overlying rights in the Safe Yield for Agricultural Pool use, including the rights of the State of California, total 82,800 acre-feet per year. Overlying rights for non-agricultural pool use total 7,366 acre-feet per year and are individually decreed for each affected party in Exhibit "D." No portion of the Safe Yield of Chino Basin exists to satisfy unexercised overlying rights and such rights have all been lost by prescription. However, uses may be made of Basin water on overlying lands which have no preserved overlying rights pursuant to the Physical Solution herein. All overlying rights are appurtenant to the land and cannot be assigned or conveyed separate or apart therefrom for the term of the Peace Agreement except that the members of the Overlying (Non-Agricultural) Pool shall have the right to Transfer or lease their quantified Production rights: (i) within the Overlying (Non-Agricultural) Pool; (ii) to Watermaster in conformance with the procedures described in the Peace Agreement between the Parties therein, dated June 29, 2000; or (iii) in accordance with the Overlying-(Non-Agricultural) Pool Pooling Plan set forth in Exhibit "G."

Attachment I

October 25, 2007

Attachment "I"

JUDGMENT AMENDMENT
TO EXHIBIT G

Exhibit G, the Overlying (Non-Agricultural) Pool Pooling Plan will be amended to revise Paragraph 5 to read as follows:

"5. Assessments.

(a) Replenishment Assessments. Each member of this Pool shall pay an assessment equal to the cost of replenishment water times the number of acre feet of production by such producer during the preceding year in excess of (a) his decreed share of the Safe Yield, plus (b) any carry-over credit under Paragraph 7 hereof.

(b) Administrative Assessments. In addition, the cost of the allocated share of Watermaster administration expense shall be recovered on an equal assessment against each acre-foot of production in the pool during such preceding fiscal year or calendar quarter; and in the case of Pool members who take substitute groundwater as set forth in Paragraph 8 hereof, such producer shall be liable for its share of administration assessment, as if the water so taken were produced, up to the limit of its decreed share of Safe Yield.

(c) Special Project OBMP Assessment. Each year, every member of this Pool will dedicate ten (10) percent of their annual share of Operating Safe Yield to Watermaster or in lieu thereof Watermaster will levy a Special Project OBMP Assessment in an amount equal to ten percent of the Pool member's respective share of Safe Yield times the then-prevailing MWD Replenishment Rate.

And to renumber Paragraph 9 as Paragraph 10 and add Paragraph 9 to read as follows:

"9. Physical Solution Transfers. All overlying rights are appurtenant to the land and cannot be assigned or conveyed separate or apart therefrom except that for the term of the Peace Agreement the members of the Overlying (Non-Agricultural) Pool shall have the discretionary right to Transfer or lease their quantified Production rights and carry-over water held in storage accounts in quantities that each member may from time to time individually determine as Transfers in furtherance of the Physical Solution: (i) within the Overlying (Non-Agricultural) Pool; (ii) to Watermaster in conformance with the procedures described in the Peace Agreement between the Parties therein, dated June 29, 2000; (iii) in conformance with the procedures described in Paragraph I of the Purchase and Sale Agreement for the Purchase of Water by Watermaster from Overlying (Non-Agricultural Pool dated June 30, 2007; or (iv) to Watermaster and thence to members of the Appropriative Pool in accordance with the following guidelines and those procedures Watermaster may further provide in Watermaster's Rules and Regulations:

(a) By December 31 of each year, the members of the Overlying (Non-Agricultural) Pool shall notify Watermaster of the amount of water each member shall make available in their individual discretion for purchase by the Appropriators. By January 31 of each year,

Watermaster shall provide a Notice of Availability of each Appropriator's pro-rata share of such water;

(b) Except as they may be limited by paragraph 9(e) below, each member of the Appropriative Pool will have, in their discretion, a right to purchase its pro-rata share of the supply made available from the Overlying (Non-Agricultural) Pool at the price established in 9(d) below. Each Appropriative Pool member's pro-rata share of the available supply will be based on each Producer's combined total share of Operating Safe Yield and the previous year's actual Production by each party;

(c) If any member of the Appropriative Pool fails to irrevocably commit to their allocated share by March 1 of each year, its share of the Overlying (Non-Agricultural) Pool water will be made available to all other members of the Appropriative Pool according to the same proportions as described in 9(b) above and at the price established in Paragraph 9(d) below. Each member of the Appropriative Pool shall complete its payment for its share of water made available by June 30 of each year.

(d) Commensurate with the cumulative commitments by members of the Appropriative Pool pursuant to (b) and (c) above, Watermaster will purchase the surplus water made available by the Overlying (Non-Agricultural) Pool water on behalf of the members of the Appropriative Pool on an annual basis at 92% of the then-prevailing "MWD Replenishment Rate" and each member of the Appropriative Pool shall complete its payment for its determined share of water made available by June 30 of each year.

(e) Any surplus water cumulatively made available by all members of the Overlying (Non-Agricultural) Pool that is not purchased by Watermaster after completion of the process set forth herein will be pro-rated among the members of the Pool in proportion to the total quantity offered for transfer in accordance with this provision and may be retained by the Overlying (Non-Agricultural) Pool member without prejudice to the rights of the members of the Pool to make further beneficial us or transfer of the available surplus.

(f) Each Appropriator shall only be eligible to purchase their pro-rata share under this procedure if the party is: (i) current on all their assessments; and (ii) in compliance with the OBMP.

(g) The right of any member of the Overlying (Non-Agricultural) Pool to transfer water in accordance with this Paragraph 9(a)-(c) in any year is dependent upon Watermaster making a finding that the member of the Overlying (Non-Agricultural) Pool is using recycled water where it is both physically available and appropriate for the designated end use in lieu of pumping groundwater.

(h) Nothing herein shall be construed to affect or limit the rights of any Party to offer or accept an assignment as authorized by the Judgment Exhibit "G" paragraph 6 above, or to affect the rights of any Party under a valid assignment."

Attachment "I-1"

Map Re-Operation

Attachment J

September 21, 2007

Attachment "J"

JUDGMENT AMENDMENT
to Exhibit I

Exhibit "I" "ENGINEERING APPENDIX" is amended to read as follows:

1. **Basin Management Parameters.** In the process of implementing the physical solution, Watermaster shall consider the following parameters:

(a) Pumping Patterns. Chino Basin is a common supply for all persons and agencies utilizing its waters. It is an objective in management of the Basin's waters that no producer be deprived of access to said waters by reason of unreasonable pumping patterns, nor by regional or localized recharge of replenishment water, insofar as such result may be practically avoided.

(b) Water Quality. Maintenance and improvement of water quality is a prime consideration and function of management decisions by Watermaster.

(c) Economic Considerations. Financial feasibility, economic impact and the cost and optimum utilization of the Basin's resources and the physical facilities of the parties are objectives and concerns equal in importance to water quantity and quality parameters.

2. **Hydraulic Control and Re-Operation.** In accordance with the purpose and objective of the Physical Solution to "establish a legal and practical means for making the maximum reasonable beneficial use of the waters of the Chino Basin" (paragraph 39) including but not limited to the use and recapture of reclaimed water (paragraph 49(a)) and the identified Basin Management Parameters set forth above, Watermaster will manage the Basin to secure and maintain Hydraulic Control through controlled overdraft.

(a) **Hydraulic Control.** "Hydraulic Control" means the reduction of groundwater discharge from the Chino North Management Zone to the Santa Ana River to de minimus quantities. The Chino North Management Zone is more fully described and set forth in Attachment I-1 to this Engineering Appendix. By obtaining Hydraulic Control, Watermaster will ensure that the water management activities in the Chino North Management Zone do not cause materially adverse impacts to the beneficial uses of the Santa Ana River downstream of Prado Dam.

(b) **Re-Operation.** "Re-Operation" means the controlled overdraft of the Basin by the managed withdrawal of groundwater for the Desalters and the potential increase in the cumulative un-replenished Production from 200,000 acre-feet authorized by paragraph 3 below, to 600,000 acre feet for the express purpose of securing and maintaining Hydraulic Control as a component of the Physical Solution.

[1] The increase in the controlled overdraft herein is separate from and in addition to the 200,000 acre-feet of accumulated overdraft authorized in paragraph 3(a) and 3(b) below over the period of 1978 through 2017.

[2] "Desalters" means the Chino I Desalter, the Chino I Expansion, the Chino II Desalter and Future Desalters, consisting of all the capital facilities and processes that remove salt from Basin water, including extraction wells and transmission facilities for delivery of groundwater to the Desalter. Desalter treatment and delivery facilities for the desalted water include pumping and storage facilities and treatment and disposal capacity in the Santa Ana Regional Interceptor.

[3] The groundwater Produced through controlled overdraft pursuant to Re-Operation does not constitute New Yield or Operating Safe Yield and it is made available under the Physical Solution for the express purpose of satisfying some or all of the groundwater Production by the Desalters until December 31, 2030. ("Period of Re-Operation").

[4] The operation of the Desalters, the Production of groundwater for the Desalters and the use of water produced by the Desalters pursuant to Re-Operation are subject to the limitations that may be set forth in Watermaster Rules and Regulations for the Desalters.

(5) Watermaster will update its Recharge Master Plan and obtain Court approval of its update, to address how the Basin will be contemporaneously managed to secure and maintain Hydraulic Control and operated at a new equilibrium at the conclusion of the period of Re-Operation. The Recharge Master Plan shall contain recharge projections and summaries of the projected water supply availability as well as the physical means to accomplish recharge projections. The Recharge Master Plan may be amended from time to time with Court approval.

(6) Re-Operation and Watermaster's apportionment of controlled overdraft in accordance with the Physical Solution will not be suspended in the event that Hydraulic Control is secured in any year *before* the full 400,000 acre-feet has been Produced without Replenishment, so long as: (i) Watermaster has prepared, adopted and the Court has approved a contingency plan that establishes conditions and protective measures that will avoid unreasonable and unmitigated material physical harm to a party or to the Basin and that equitably distributes the cost of any mitigation attributable to the identified contingencies; and (ii) Watermaster is in substantial compliance with a Court approved Recharge Master Plan.

3 **Operating Safe Yield.** Operating Safe Yield in any year shall consist of the Appropriative Pool's share of Safe Yield of the Basin, plus any accumulated overdraft of the Basin which Watermaster may authorize under 3(a) and 3(b) below. In adopting the Operating Safe Yield for any year, Watermaster shall be limited as follows:

(a) Accumulated Overdraft. During this Judgment and Physical Solution, the overdraft accumulated from and after the effective date of the Physical Solution and resulting from an excess of Operating Safe Yield over Safe Yield shall not exceed 200,000 acre feet.

(b) Quantitative Limits. In no event shall Operating Safe Yield in any year be less than the Appropriative Pool's share of Safe Yield, nor shall it exceed such share of Safe Yield by more than 10,000 acre-feet. The Initial Operating Safe Yield is hereby set at 54,834 acre-feet per year. Operating Safe Yield shall not be changed upon less than five (5) years' notice by Watermaster.

Nothing contained in this paragraph shall be deemed to authorize directly or indirectly, any modification of the allocation of shares in Safe Yield to the overlying pools, as set forth in Paragraph 44 of the Judgment.

4. Groundwater Storage Agreements. Any agreements authorized by Watermaster for Storage of supplemental water in the available groundwater storage capacity of Chino Basin shall include, but not be limited to:

(a) The quantities and term of the storage right.

(b) A statement of the priority or relations of said right, as against overlying or Safe Yield uses, and other storage rights.

(c) The procedure for establishing delivery rates, schedules and procedures which may include:

[1] spreading or injection, or

[2] in lieu deliveries of supplemental water for direct use.

(d) The procedures for calculation of losses and annual accounting for water in storage by Watermaster.

(e) The procedures for establishment and administration of withdrawal schedules, locations and methods.

Attachment K

October 25, 2007

PEACE II AGREEMENT:
PARTY SUPPORT FOR WATERMASTER'S OBMP IMPLEMENTATION PLAN, –
SETTLEMENT AND RELEASE OF CLAIMS
REGARDING FUTURE DESALTERS

WHEREAS, paragraph 41 of the Judgment entered in *Chino Basin Municipal Water District v. City of Chino* (San Bernardino Superior Court Case No. 51010) grants Watermaster, with the advice of the Advisory and Pool Committees, "discretionary powers in order to implement an Optimum Basin Management Program ("OBMP") for the Chino Basin";

WHEREAS, the Parties to the Judgment executed an agreement resolving their differences and pledging their support for Watermaster actions in accordance with specific terms in June of 2000 ("Peace Agreement");

WHEREAS, Watermaster approved Resolution 00-05, and thereby adopted the goals and objectives of the OBMP, the OBMP Implementation Plan and committed to act in accordance with the terms of the Peace Agreement;

WHEREAS, pursuant to Article IV, paragraph 4.2, each of the parties to the Peace Agreement agreed not to oppose Watermaster's adoption and implementation of the OBMP Implementation Plan attached as Exhibit "B" to the Peace Agreement;

WHEREAS, the Peace Agreement, the OBMP Implementation Plan and the Chino Basin Watermaster Rules and Regulations contemplate further actions by Watermaster in furtherance of its responsibilities under paragraph 41 of the Judgment and in accordance with the Peace Agreement and the OBMP Implementation Plan;

WHEREAS, the Parties to the Peace Agreement made certain commitments regarding the funding, design, construction and operation of Future Desalters;

WHEREAS, after receiving input from its stakeholders in the form of the Stakeholder's Non-Binding Term Sheet, Watermaster has proposed to adopt Resolution 07-05 attached as Exhibit "1" hereto to further implement the OBMP through a suite of measures commonly referred to and herein defined as "Peace II Measures", including but not limited to the 2007 Supplement to the OBMP, the Second Amendment to the Peace Agreement, amendments to Watermater's Rules and Regulations, the purchase and sale of water within the Overlying (Non-Agricultural) Pool and certain Judgment amendments; and

NOW, THEREFORE, in consideration of the mutual promises specified herein and by conditioning their performance under this Agreement upon the conditions precedent set forth in Article III herein, the Watermaster Approval, and Court Order, and for other good and valuable consideration, the Parties agree as follows:

ARTICLE I
DEFINITIONS AND RULES OF CONSTRUCTION

1.1 Definitions.

(a) "Desalters" means Desalters and Future Desalters collectively, as defined in the Peace Agreement.

(b) "Hydraulic Control" means the reduction of groundwater discharge from the Chino North Management Zone to the Santa Ana River to de minimus quantities. The Chino North Management Zone is defined in the 2004 Basin Plan amendment (RWQCB resolution R8-2004-001) attached hereto as Exhibit "B."

(c) "Leave Behind" means a contribution to the Basin from water held in storage within the Basin under a Storage and Recovery Agreement that may be established by Watermaster from time to time that may reflect any or all of the following: (i) actual losses; (ii) equitable considerations associated with Watermaster's management of storage agreements; and (iii) protection of the long-term health of the Basin against the cumulative impacts of simultaneous recovery of groundwater under all storage agreements.

(d) Re-Operation" means the controlled overdraft of the Basin by the managed withdrawal of groundwater Production for the Desalters and the potential increase in the cumulative un-replenished Production from 200,000 authorized by paragraph 3 of the Engineering Appendix Exhibit I to the Judgment, to 600,000 acre feet for the express purpose of securing and maintaining Hydraulic Control as a component of the Physical Solution.

(e) Unless otherwise expressly provided herein, all definitions set forth in the Peace Agreement and the Judgment are applicable to the terms as they are used herein.

1.2 Rules of Construction.

(a) Unless the context clearly requires otherwise:

(i) The plural and singular forms include the other;

(ii) "Shall," "will," "must," and "agrees" are each mandatory;

(iii) "May" is permissive;

(iv) "Or" is not exclusive;

(v) "Includes" and "including" are not limiting; and

(vi) "Between" includes the ends of the identified range.

(b) Headings at the beginning of Articles, paragraphs and subparagraphs of this Agreement are solely for the convenience of the Parties, are not a part of this Agreement and shall not be used in construing it.

(c) The masculine gender shall include the feminine and neuter genders and vice versa.

(d) The word "person" shall include individual, partnership, corporation, limited liability company, business trust, joint stock company, trust, unincorporated association, joint venture, governmental authority, water district and other entity of whatever nature.

(e) Reference to any agreement (including this Agreement), document, or instrument means such agreement, document, instrument as amended or modified and in effect from time to time in accordance with the terms thereof and, if applicable, the terms thereof.

(f) Except as specifically provided herein, reference to any law, statute or ordinance, regulation or the like means such law as amended, modified, codified or reenacted, in whole or in part and in effect from time to time, including any rules and regulations promulgated thereunder.

ARTICLE II
COMPLIANCE WITH CEQA

2.1 Project Description. The proposed project description regarding the design, permitting, construction and operation of Future Desalter, securing Hydraulic Control through Basin Re-Operation is set forth in Attachment "A" to Watermaster Resolution 07-05 attached hereto as Exhibit "1."

2.2 Acknowledgment of IEUA as the Lead Agency for CEQA Review. IEUA has been properly designated as the "Lead Agency" for the purposes of completing environmental assessment and review of the proposed project.

2.3 Commitments are Consistent with CEQA. The Parties agree and acknowledge that no commitment will be made to carry out any "project" under the amendments to the OBMP and within the meaning of CEQA unless and until the environmental review and assessment that may be required by CEQA for that defined "project" have been completed.

2.4 Reservation of Discretion. Execution of this Agreement is not intended to commit any Party to undertake a project without compliance with CEQA or to commit the Parties individually or collectively to any specific course of action, which would result in the present approval of a future project.

2.5 No Prejudice by Comment or Failure to Comment. Nothing contained in environmental review of the Project, or a Party's failure to object or comment thereon, shall limit any

Party's right to allege that "Material Physical Injury" will result or has resulted from the implementation of the OBMP or its amendment.

ARTICLE III
CONDITIONS PRECEDENT

3.1 Performance Under Articles IV-XII is Subject to Satisfaction of the Conditions Precedent. Each Party's obligations under this Agreement are subject to the satisfaction of the following conditions precedent on or before the dates specified below, unless satisfaction or a specified condition or conditions is waived in writing by all other Parties:

(a) Watermaster approval of Resolution 07-05 in a form attached hereto as Exhibit "1," including the following Attachments thereto

(i) the amendments to the Chino Basin Watermaster Rules and Regulations set forth in Attachment "F" thereto.

(ii) the 2007 Supplement to the OBMP Implementation Plan set forth in Attachment "D" thereto.

(iii) the amendments to the Judgment set forth in Attachments "H, I, and J" thereto.

(iv) the Second Amendment to the Peace Agreement set forth in Attachment "L" thereto.

(v) the Purchase and Sale Agreement for the Purchase of Water by Watermaster From the Overlying (Non-Agricultural) Pool as set forth in Attachment G thereto.

(b) The execution of the proposed Second Amendment to the Peace Agreement by all Parties to the Peace Agreement .

(c) Court approval of the proposed Judgment Amendments and a further order of the Court directing Watermaster to proceed in accordance with the terms of the Peace II Measures as embodied in Resolution 07-05.

ARTICLE IV
MUTUAL ACKNOWLEDGEMENT AND COVENANTS

4.1 Acknowledgment of Peace II Measures. The collective actions of Watermaster set forth in Watermaster Resolution 07-05 and the Attachments thereto (Peace II Measures) constitute further actions by Watermaster in implementing the OBMP in accordance with the grant and limitations on its discretionary authority set forth under paragraph 41 of the Judgment

4.2 Non-Opposition. No Party to this Agreement shall oppose Watermaster's adoption of Resolution 07-05 and implementation of the Peace II measures as embodied therein

including the Judgment Amendments, Amendments to the Peace Agreement, the 2007 Supplement to the OBMP Implementation Plan and Amendments to the Chino Basin Watermaster's Rules and Regulations or to Watermaster's execution of memoranda of agreement that are not materially inconsistent with the terms contained therein. Notwithstanding this covenant, no party shall be limited in their right of participation in all functions of Watermaster as they are provided in the Judgment or to preclude a Party to the Judgment from seeking judicial review of Watermaster determinations pursuant to the Judgment or as otherwise provided in this Agreement.

4.3 Consent to Amendments. Each Party expressly consents to the Judgment amendments and modifications set forth in Watermaster's Resolution 07-05.

4.4 Non-Agricultural Pool Intervention. The Parties acknowledge and agree that any Party to the Judgment shall have the right to purchase Non-Agricultural overlying property within the Basin and appurtenant water rights and to intervene in the Non-Agricultural Pool.

ARTICLE V
FUTURE DESALTERS

5.1 Purpose. Watermaster plans to coordinate and the Parties to the Judgment plan to arrange for the physical capacity and potable water use of water from the Desalters. Desalters in existence on the effective date of this Agreement will be supplemented to provide the required capacity to cumulatively produce approximately 40,000 acre-feet per year of groundwater from the Desalters by 2012.

5.2 2007 Supplement to the OBMP Implementation Plan. The OBMP Implementation Plan will be supplemented as set forth in the 2007 Supplement to the OBMP Implementation Plan to reflect that Western Municipal Water District ("WMWD"), acting independently or in its complete discretion with the City of Ontario ("Ontario") or the Jurupa Community Services District ("Jurupa") or both, will exercise good faith and reasonable best efforts to arrange for the design, planning, and construction of Future Desalters in accordance with the 2007 Supplement to the OBMP Implementation Plan, to obtain Hydraulic Control, further Re-Operation and support the Future Desalters.

5.3 Implementation. WMWD, acting independently or in its complete discretion with Ontario, Jurupa, or both, will exercise good faith and reasonable best efforts to arrange for the design, planning, and construction of Future Desalters in accordance with the 2007 Supplement to the OBMP Implementation Plan, to account for Hydraulic Control, Re-Operation and Future Desalters.

(a) WMWD, acting independently or in its complete discretion with Ontario or Jurupa or both, will exercise good faith and reasonable best efforts to proceed in accordance with the timeline for the completion of design, permitting, finance and construction as attached hereto as Exhibit "2"

(b) WMWD, acting independently or in its complete discretion with the City of Ontario or the Jurupa Community Services District or both, will provide quarterly progress reports to Watermaster and the Court.

5.4 Project Description. The Future Desalters will add up to 9 mgd to existing Desalters. This will include production capacity from new groundwater wells that will be located in the Southerly end of the Basin, as depicted in Exhibit "3" attached hereto and incorporated herein by this reference. The final design and construction of Future Desalters *may* depend on the terms and conditions that may be freely arrived at by fair bargaining among WMWD and the Chino Basin Desalter Authority ("CDA") or whether it is required to build stand-alone facilities or both. There are material yield benefits to the Parties to the Judgment that are achieved by obtaining Hydraulic Control through Basin Re-Operation. The extent of these benefits is somewhat dependent upon the final location of new production facilities within the southerly end of the Basin. Accordingly, Watermaster will ensure that the location of Future Desalter groundwater production facilities will achieve both Hydraulic Control and maximize yield enhancement by their location emphasizing groundwater production from the Southerly end of the Basin.

5.5 Implementing Agreements. Within twenty-four (24) months of the effective date, WMWD, acting independently or in its complete discretion with the City of Ontario or the Jurupa Community Services District or both, will exercise good faith and reasonable best efforts to complete final binding agreement(s) regarding Future Desalters that includes the following key terms:

(a) Arrangements for WMWD's purchase of product water from CDA;

(b) Arrangements with CDA, Jurupa and other Chino Basin parties for the common use of existing facilities, if any;

(c) Arrangement with the owners of the SARI line;

(d) Arrangements with the Appropriative Pool regarding the apportionment of any groundwater produced as controlled overdraft in accordance with the Physical Solution between Desalters I, Desalters II on the one hand and the Future Desalters on the other hand;

(e) WMWD's payment to Watermaster to reimburse Parties to the Judgment for their historical contributions towards the OBMP, if any;

(f) The schedule for approvals and project completion.

5.6 Reservation of Discretion. Nothing herein shall be construed as committing WMWD, or any members of CDA to take any specific action(s) to accommodate the needs or requests of the other, Watermaster, or any Party to the Judgment, whatever the request may be.

5.7 Condition Subsequent. WMWD's obligation to execute a binding purchase agreement with CDA or to independently develop the Future Desalters is subject to the express condition subsequent that the total price per acre-foot of water delivered must not be projected to exceed the sum of the following: (i) the full MWD Tier II Rate; (ii) the MWD Treatment Surcharge calculated in terms of an annual average acre-foot charge; and (iii) $150 (in 2006 dollars) per acre-foot of water delivered to account for water supply reliability.

(a) The full acre-foot cost to Western for Capital and O&M (assuming the priority allocation of controlled overdraft), includes:

(i) the delivery of the desalted water to its Mockingbird Reservoir or directly to the City of Norco,

(ii) any applicable ongoing Watermaster assessments, payments to CDA and JCSD and for SARI utilization.

(b) Provided that if third-party funding, grants and a MWD subsidy under the Local Resources Program or otherwise should reduce Western's costs to an amount which is $75 (in 2006 dollars) below the cap described in paragraph 5.5, Western will transmit an amount equal to fifty (50) percent of the amount less than the computed price cap less $75 (in 2006 dollars) to Watermaster.

(c) Western may elect to exercise its right of withdrawal under this paragraph 5.7 within 120 days following the later of: (1) completion of preliminary design; or (2) the certification of whatever CEQA document is prepared for the project, but not later than sixty (60) days thereafter and in no event after a binding water purchase agreement has been executed.

5.8 Limitations. The operation of the Future Desalters will be subject to the following limitations:

(a) Well Location. New groundwater production facilities for the Future Desalters will be located in the southern end of the Basin to achieve the dual purpose of obtaining Hydraulic Control and increasing Basin yield.

(i) New wells will be constructed in the shallow aquifer system among Desalter I wells No. 1 through 4 and west of Desalter I.

(ii) So long as these wells produce at least one-half of the Future Desalter groundwater, the Future Desalters shall be entitled to first priority for the allocation of the 400,000 acre-feet of controlled overdraft authorized by the Judgment Amendments to Exhibit I.

(b) Export. The export of groundwater from the Basin must be minimized. WMWD will present a plan for export minimization to the Watermaster for review and approval prior to operation of the Future Desalters.

(i) Watermaster will account for water imported and exported by WMWD.

(ii) Watermaster will prepare an initial reconciliation of WMWD's imports and exports at the end of the first ten (10) years of operation and every year thereafter to determine whether a "net export" occurred.

(iii) WMWD will pay an assessment, if any, on all "net exports" in accordance with Judgment Exhibit "H," paragraph 7(b) after the initial reconciliation is completed at the end of the first ten (10) years of operation.

ARTICLE VI
GROUNDWATER PRODUCTION BY AND REPLENISHMENT FOR DESALTERS

6.1 Acknowledgment. The Parties acknowledge that the hierarchy for providing Replenishment Water for the Desalters is set forth in Article VII, paragraph 7.5 of the Peace Agreement, and that this section controls the sources of water that will be offered to offset Desalter Production.

6.2 Peace II Desalter Production Offsets. To facilitate Hydraulic Control through Basin Re-Operation, in accordance with the 2007 Supplement to the OBMP Implementation Plan and the amended Exhibits G and I to the Judgment, additional sources of water will be made available for purposes of Desalter Production and thereby some or all of a Replenishment obligation. With these available sources, the Replenishment obligation attributable to Desalter production in any year will be determined by Watermaster as follows:

(a) Watermaster will calculate the total Desalter Production for the preceding year and then apply a credit against the total quantity from:

(i) the Kaiser account (Peace Agreement Section 7.5(a).);

(ii) dedication of water from the Overlying (Non-Agricultural) Pool Storage Account or from any contribution arising from an annual authorized Physical Solution Transfer in accordance with amended Exhibit G to the Judgment;

(iii) New Yield (other than Stormwater (Peace Agreement Section 7.5(b));

(iv) any declared losses from storage in excess of actual losses enforced as a "Leave Behind";

(v) Safe Yield that may be contributed by the parties (Peace Agreement Section 7.5(c));

(vi) any Production of groundwater attributable to the controlled overdraft authorized pursuant to amended Exhibit I to the Judgment.

(b) To the extent available credits are insufficient to fully offset the quantity of groundwater production attributable to the Desalters, Watermaster will use water or revenue obtained by levying the following assessments among the members of the Overlying (Non-Agricultural) Pool and the Appropriative Pool to meet any remaining replenishment obligation as follows.

(i) A Special OBMP Assessment against the Overlying (Non-Agricultural) Pool as more specifically authorized and described in amendment to Exhibit "G" paragraph 8(c) to the Judgment will be dedicated by Watermaster to further off-set replenishment of the Desalters. However, to the extent there is no remaining replenishment obligation attributable to the Desalters in any year after applying the off-sets set forth in 6.2(a), the OBMP Special Assessment levied by Watermaster will be distributed as provided in Section 9.2 below. The Special OBMP Assessment will be assessed pro-rata on each member's share of Safe Yield, followed by

(ii) A Replenishment Assessment against the Appropriative Pool, pro-rata based on each Producer's combined total share of Operating Safe Yield and the previous year's actual production. Desalter Production is excluded from this calculation. However, if there is a material reduction in the net cost of Desalter product water to the purchasers of product water, Watermaster may re-evaluate whether to continue the exclusion of Desalter Production but only after giving due regard to the contractual commitment of the parties.

(iii) The quantification of any Party's share of Operating Safe Yield does not include the result of any land use conversions.

(c) The rights and obligations of the parties, whatever they may be, regarding Replenishment Assessments attributable to all Desalters and Future Desalters in any renewal term of the Peace Agreement are expressly reserved and not altered by this Agreement.

ARTICLE VII
YIELD ACCOUNTING

7.1 New Yield Attributable to Desalters. Watermaster will make an annual finding as to the quantity of New Yield that is made available by Basin Re-Operation including that portion that is specifically attributable to the Existing and Future Desalters. Any subsequent recalculation of New Yield as Safe Yield by Watermaster will not change the priorities set forth above for offsetting Desalter production as set forth in Article VII, Section 7.5 of the Peace Agreement. For the initial term of the Peace Agreement, neither Watermaster nor the Parties will request that Safe Yield be recalculated in a manner that incorporates New Yield *attributable to the Desalters* into the determination of Safe Yield so that this source of supply will be available for Desalter Production rather than for use by individual parties to the Judgment.

7.2 Apportionment of Controlled Overdraft. Within twelve (12) months of the court approval and no later than December 1, 2008, with facilitation by Watermaster, WMWD and the Appropriative Pool will establish by mutual agreement the portion of the 400,000 acre-feet of the controlled overdraft authorized by the amendment to Exhibit "I" to the Judgment that will be allocated among the Desalters and pursuant to a proposed schedule.

(a) To the extent the groundwater wells for the Future Desalters pump at least fifty (50) percent groundwater from the southern end of the Basin as set forth in Exhibit "3" the *Future Desalters* will be entitled to first priority to the controlled overdraft authorized by the amendment to Exhibit "I" to the Judgment.

(b) WMWD and the Appropriative Pool will exercise good faith and reasonable best efforts to arrive at a fair apportionment. Relevant considerations in establishing the apportionment include, but are not limited to: (i) the nexus between the proposed expansion and achieving Hydraulic Control;(ii) the nexus between the project and obtaining increased yield; (iii) the identified capital costs; (iv) operating and maintenance expenses; and (iv) the availability of third-party funding.

(c) The parties will present any proposed agreement regarding apportionment to Watermaster. Watermaster will provide due regard to any agreement between WMWD and the Appropriative Pool and approve it so long as the proposal phases the Re-Operation over a reasonable period of time to secure the physical condition of Hydraulic Control and will achieve the identified yield benefits while at the same time avoiding Material Physical Injury or an inefficient use of basin resources.

(d) If WMWD and the Appropriative Pool do not reach agreement on apportionment of controlled overdraft to Future Desalters, then no later than August 31, 2009, the members of the Appropriative Pool will submit a plan to Watermaster that achieves the identified goals of increasing the physical capacity of the Desalters and potable water use of approximately 40,000 acre-feet of groundwater production from the Desalters from the Basin no later than 2012. The Appropriative Pool proposal must demonstrate how it has provided first priority to the Future Desalters if the conditions of paragraph 7.2(a) are met.

(e) Watermaster will have discretion to apportion the controlled overdraft under a schedule that reflects the needs of the parties and the need for economic certainty and the factors set forth in Paragraph 7.2(a) above. Watermaster may exercise its discretion to establish a schedule for Basin Re-Operation that best meets the needs of the Parties to the Judgment and the physical conditions of the Basin, including but not limited to such methods as "ramping up," "ramping down," or "straight-lining."

(i) An initial schedule will be approved by Watermaster and submitted to the Court concurrent with Watermaster Resolution 07-05.

(ii) Watermaster may approve and request Court approval of revisions to the initial schedule if Watermaster's approval and request are supported by a technical report demonstrating the continued need for access to controlled overdraft, subject to the limitations set forth in amended Exhibit "I" to the Judgment and the justification for the amendment.

7.3 Suspension. An evaluation of Watermaster's achievement of Basin outflow conditions, achievement of Hydraulic Control and compliance with Regional Board orders will be completed annually by Watermaster. Re-Operation and Watermaster's apportionment of controlled overdraft will not be suspended in the event that Hydraulic Control is secured in any year *before* the full 400,000 acre-feet has been produced so long as: (i) Watermaster has prepared, adopted and the Court has approved a contingency plan that establishes conditions and protective measures to avoid Material Physical Injury and that equitably distributes the cost of any mitigation attributable to the identified contingencies, and (ii) Watermaster is in substantial compliance with a Court approved Recharge Master Plan as set forth in Paragraph 8.1 below.

7.4 Storage: Uniform Losses. The Parties acknowledge that Watermaster has assessed a two (2)-percent loss on all groundwater presently held in storage to reflect the current hydrologic condition. As provided in the Peace Agreement, Watermaster will continue to maintain a minimum 2 (two) percent loss until substantial evidence exists to warrant the imposition of another loss factor. However, the Parties further acknowledge and agree that losses have been substantially reduced through the OBMP Implementation Plan and the operation of Desalters I and II and that once Hydraulic Control is achieved outflow and losses from the Basin will have been limited to de minimis quantities. Therefore, Watermaster may establish uniform losses for all water held in storage based on whether the Party has substantially contributed to Watermaster reducing losses and ultimately securing and maintaining Hydraulic Control.

(a) Pre-Implementation of the Peace Agreement. The uniform annual loss (leave behind) of six (6) percent will be applied to all storage accounts to address actual losses, management and equitable considerations arising from the implementation of the Peace Agreement, the OBMP Implementation Plan, the 2007 Supplement to the OBMP Implementation Plan, including but not limited to the Desalters and Hydraulic Control unless the Party holding the storage account: (i) has previously contributed to the implementation of the OBMP as a Party to the Judgment, is in compliance with their continuing covenants under the Peace Agreement or in lieu thereof they have paid or delivered to Watermaster "financial equivalent" consideration to offset the cost of past performance prior to the implementation of the OBMP and (ii) promised continued future compliance with Watermaster Rules and Regulations. In the event that a Party satisfies 7.4(a)(i) and7.4(a)(ii) they will be assessed a minimum loss of two (2) percent against all water held in storage to reflect actual estimated losses. Watermaster's evaluation of the sufficiency of any consideration or financial equivalency may take into account the fact that one or more Parties to the Judgment are not similarly situated.

(b) Post-Hydraulic Control. Following Watermaster's determination that it has achieved Hydraulic Control and for so long as Watermaster continues to sustain losses from the Basin to the Santa Ana River at a de minimis level (less than one (1) percent), any Party to the Judgment (agency, entity or person) may qualify for the Post-Hydraulic Control uniform loss percentage of less than 1 percent if they meet the criteria of 7.4(a)(i) and 7.4(a)(ii) above.

7.5 Allocation of Losses. Any losses from storage assessed as a Leave Behind in excess of actual losses ("dedication quantity") will be dedicated by Watermaster towards groundwater Production by the Desalters to thereby avoid a Desalter replenishment obligation that may then exist *in the year* of recovery. Any dedication quantity which is not required to offset Desalter Production in the year in which the loss is assessed, will be made available to the members of the Appropriative Pool. The dedication quantity will be pro-rated among the members of the Appropriative Pool in accordance with each Producer's combined total share of Operating Safe Yield and the previous year's actual production. However, before any member of the Appropriative Pool may receive a distribution of any dedication quantity, they must be in full compliance with the 2007 Supplement to the OBMP Implementation Plan and current in all applicable Watermaster assessments.

ARTICLE VIII
RECHARGE

8.1 Update to the Recharge Master Plan. Watermaster will update and obtain Court approval of its update to the Recharge Master Plan to address how the Basin will be contemporaneously managed to secure and maintain Hydraulic Control and subsequently operated at a new equilibrium at the conclusion of the period of Re-Operation. The Recharge Master Plan will be jointly approved by IEUA and Watermaster and shall contain recharge estimations and summaries of the projected water supply availability as well as the physical means to accomplish the recharge projections. Specifically, the Plan will reflect an appropriate schedule for planning, design, and physical improvements as may be required to provide reasonable assurance that following the full beneficial use of the groundwater withdrawn in accordance with the Basin Re-Operation and authorized controlled overdraft, that sufficient Replenishment capability exists to meet the reasonable projections of Desalter Replenishment obligations. With the concurrence of IEUA and Watermaster, the Recharge Master Plan will be updated and amended as frequently as necessary with Court approval and not less than every five (5) years. Costs incurred in the design, permitting, operation and maintenance of recharge improvements will be apportioned in accordance with the following principles.

a. Operations and Maintenance. All future operations and maintenance costs attributable to all recharge facilities utilized for recharge of recycled water in whole or in part unfunded from third party sources, will be paid by the Inland Empire Utilities Agency ("IEUA") and Watermaster. The contribution by IEUA will be determined annually on the basis of the relative proportion of recycled water recharged bears to the total recharge from all sources in the prior year. For example, if 35 percent of total recharge in a single year is from recycled water, then IEUA will bear 35 percent of the operations and maintenance costs. All remaining unfunded costs attributable to the facilities used by Watermaster will be paid by Watermaster.

i. IEUA reserves discretion as to how it assesses its share of costs.

ii. Watermaster will apportion its costs among the members of the stakeholders in accordance with Production, excluding Desalter Production.

iii. The operations and maintenance costs of water recharged by aquifer storage and recovery will not be considered in the calculation other than by express agreement.

b. Capital. Mutually approved capital improvements for recharge basins that do or can receive recycled water constructed pursuant to the Court approved Recharge Master Plan, if any, will be financed through the use of third party grants and contributions if available, with any unfunded balance being apportioned 50 percent each to IEUA and Watermaster. The Watermaster contribution shall be allocated according to shares of Operating Safe Yield. All remaining unfunded costs attributable to the facilities used by Watermaster will be paid by Watermaster.

8.2 Coordination. The members of the Appropriative Pool will coordinate the development of their respective Urban Water Management Plans and Water Supply Master Plans with Watermaster as follows.

(a) Each Appropriator that prepares an Urban Water Management Plan and Water Supply Plans will provide Watermaster with copies of their existing and proposed plans.

(b) Watermaster will use the Plans in evaluating the adequacy of the Recharge Master Plan and other OBMP Implementation Plan program elements.

(c) Each Appropriator will provide Watermaster with a draft in advance of adopting any proposed changes to their Urban Water Management Plans and in advance of adopting any material changes to their Water Supply Master Plans respectively in accordance with the customary notification routinely provided to other third parties to offer Watermaster a reasonable opportunity to provide informal input and informal comment on the proposed changes.

(d) Any party that experiences the loss or the imminent threatened loss of a material water supply source will provide reasonable notice to Watermaster of the condition and the expected impact, if any, on the projected groundwater use.

8.3 Continuing Covenant. To ameliorate any long-term risks attributable to reliance upon un-replenished groundwater production by the Desalters, the annual availability of any portion of the 400,000 acre-feet set aside as controlled overdraft as a component of the Physical Solution, is expressly subject to Watermaster making an annual finding about whether it is in substantial compliance with the revised Watermaster Recharge Master Plan pursuant to Paragraphs 7.3 and 8.1 above.

8.4 Acknowledgment re 6,500 Acre-Foot Supplemental Recharge. The Parties make the following acknowledgments regarding the 6,500 Acre-Foot Supplemental Recharge:

(a) A fundamental premise of the Physical Solution is that all water users dependent upon Chino Basin will be allowed to pump sufficient waters from the Basin to meet their requirements. To promote the goal of equal access to groundwater within all areas and sub-areas of the Chino Basin, Watermaster has committed to use its best efforts to direct recharge relative to production in each area and sub-area of the Basin and to achieve long-term balance between total recharge and discharge. The Parties acknowledge that to assist Watermaster in providing for recharge, the Peace Agreement sets forth a requirement for Appropriative Pool purchase of 6,500 acre-feet per year of Supplemental Water for recharge in Management Zone 1 (MZ1). The purchases have been credited as an addition to Appropriative Pool storage accounts. The water recharged under this program has not been accounted for as Replenishment water.

(b) Watermaster was required to evaluate the continuance of this requirement in 2005 by taking into account provisions of the Judgment, Peace Agreement and OBMP, among all other relevant factors. It has been determined that other obligations in the Judgment and Peace Agreement, including the requirement of hydrologic balance and projected replenishment obligations, will provide for sufficient wet-water recharge to make the separate commitment of Appropriative Pool purchase of 6,500 acre-feet unnecessary. Therefore, because the recharge target as described in the Peace Agreement has been achieved, further purchases under the program will cease and Watermaster will proceed with operations in accordance with the provisions of paragraphs (c), (d) and (e) below.

(c) The parties acknowledge that, regardless of Replenishment obligations, Watermaster will independently determine whether to require wet-water recharge within MZ1 to maintain hydrologic balance and to provide equal access to groundwater in accordance with the provisions of this Section 8.4 and in a manner consistent with the Peace Agreement, OBMP and the Long Term Plan for Subsidence.". Watermaster will conduct its recharge in a manner to provide hydrologic balance within, and will emphasize recharge in MZ1. Accordingly, the Parties acknowledge and agree that each year Watermaster shall continue to be guided in the exercise of its discretion concerning recharge by the principles of hydrologic balance.

(d) Consistent with its overall obligations to manage the Chino Basin to ensure hydrologic balance within each management zone, for the duration of the Peace Agreement (until June of 2030), Watermaster will ensure that a minimum of 6,500 acre-feet of wet water recharge occurs within MZ1 on an annual basis. However, to the extent that water is unavailable for recharge or there is no replenishment obligation in any year, the obligation to recharge 6,500 acre-feet will accrue and be satisfied in subsequent years.

(1) Watermaster will implement this measure in a coordinated manner so as to

facilitate compliance with other agreements among the parties, including but not limited to the Dry-Year Yield Agreements.

(2) In preparation of the Recharge Master Plan, Watermaster will consider whether existing groundwater production facilities owned or controlled by producers within MZ1 may be used in connection with an aquifer storage and recovery ("ASR") project so as to further enhance recharge in specific locations and to otherwise meet the objectives of the Recharge Master Plan.

(e) Five years from the effective date of the Peace II Measures, Watermaster will cause an evaluation of the minimum recharge quantity for MZ1. After consideration of the information developed in accordance with the studies conducted pursuant to paragraph 3 below, the observed experiences in complying with the Dry Year Yield Agreements as well as any other pertinent information, Watermaster may increase the minimum requirement for MZ1 to quantities greater than 6,500 acre-feet per year. In no circumstance will the commitment to recharge 6,500 acre-feet be reduced for the duration of the Peace Agreement.

ARTICLE IX

9.1 Basin Management Assistance. Three Valleys Municipal Water District ("TVMWD") shall assist in the management of the Basin through a financial contribution of $300,000 to study the feasibility of developing a water supply program within Management Zone 1 of the Basin or in connection with the evaluation of Future Desalters. The study will emphasize assisting Watermaster in meeting its OBMP Implementation Plan objectives of concurrently securing Hydraulic Control through Re-Operation while attaining Management Zone 1 subsidence management goals. Further, TVMWD has expressed an interest in participating in future projects in the Basin that benefit TVMWD. If TVMWD wishes to construct or participate in such future projects, TVMWD shall negotiate with Watermaster in good faith concerning a possible "buy-in" payment.

9.2 Allocation of Non-Agricultural Pool OBMP Special Assessment

a. For a period of ten years from the effective date of the Peace II Measures, any water (or financial equivalent) that may be contributed from the Overlying (Non-Agricultural) Pool in accordance with paragraph 8(c) of Exhibit G to the Judgment (as amended) will be apportioned among the members of the Appropriative Pool in each year as follows:

(i)	City of Ontario.	80 af
(ii)	City of Upland	161 af
(iii)	Monte Vista Water District	213 af
(iv)	City of Pomona	220 af
(v)	Marygold Mutual Water Co	16 af
(vi)	West Valley Water District	15 af

(vii) Santa Ana River Water Co. 31 af

b. In the eleventh year from the effective date of the Peace II Measures and in each year thereafter in which water may be available from the Overlying (Non-Agricultural) Pool in excess of identified Desalter replenishment obligations as determined in accordance with Section 6.2 above, any excess water (or financial equivalent) will be distributed pro rata among the members of the Appropriative Pool based upon each Producer's combined total share of Operating Safe Yield and the previous year's actual production.

ARTICLE X
SETTLEMENT AND RELEASE

10.1 Settlement. By its execution of this Agreement, the Parties mutually and irrevocably, fully settle their respective claims, rights and obligations, whatever they may be, regarding the design, funding, construction and operation of Future Desalters as set forth in and arising from Article VII of the Peace Agreement.

10.2 Satisfaction of Peace Agreement Obligation Regarding Future Desalters. The Parties' individual and collective responsibilities arising from the Part VII of the Peace Agreement and the OBMP Implementation Plan regarding the planning, design, permitting, construction and operation of Future Desalters, whatever they may be, are unaffected by this Agreement. However, upon the completion of a 10,000 AFY (9 mgd) expansion of groundwater production and desalting from Desalter II as provided for herein, the Parties will be deemed to have satisfied all individual and collective pre-existing obligations arising from the Peace Agreement and the OBMP Implementation Plan, whatever they may be, with regard to Future Desalters as described in Part VII of the Peace Agreement and the OBMP Implementation Plan.

10.3 Satisfaction of Pomona Credit. In recognition of the ongoing benefits received by TVMWD through the City of Pomona's anion exchange project, as its sole and exclusive responsibility, TVMWD will make an annual payment to Watermaster in an amount equal to the credit due the City of Pomona under Peace Agreement Paragraph 5.4(b) ("the Pomona Credit").

(a) Within ninety (90) days of each five-year period following the Effective Date of this Agreement, in its sole discretion TVMWD shall make an election whether to continue or terminate its responsibilities under this paragraph. TVMWD shall provide written notice of such election to Watermaster.

(b) Watermaster will provide an annual invoice to TVMWD for the amount of the Pomona Credit.

(c) Further, in any renewal term of the Peace Agreement, TVMWD will continue to make an equivalent financial contribution which TVMWD consents to

Watermaster's use for the benefit of MZ1, subject to the same conditions set forth above with respect to TVMWD's payment of the "Pomona Credit".

(d) In the event TVMWD elects to terminate is obligation under this Paragraph, the Peace Agreement and the responsibility for satisfying the Pomona Credit will remain unchanged and unaffected, other than as it will be deemed satisfied for each five-year period that TVMWD has actually made the specified payment.

10.4 Release. Upon WMWD's completion of a 10,000 AFY (9 mgd) expansion of groundwater production and desalting in a manner consistent with the parameters set forth in this Agreement, each Party, for itself, its successors, assigns, and any and all persons taking by or through it, hereby releases WMWD and IEUA from any and all obligations arising from WMWD's and IEUA's responsibility for securing funding, designing, and constructing Future Desalters as set forth in or arising exclusively from Article VII of the Peace Agreement and the Program Elements 3, 6, and 7, OBMP Implementation Plan only, and each Party knowingly and voluntarily waives all rights and benefits which are provided by the terms and provisions of section 1542 of the Civil Code of the State of California, or any comparable statute or law which may exist under the laws of the State of California, in or arising from WMWD's and IEUA's responsibility for securing funding, designing, and constructing Future Desalters as set forth in or arising exclusively from Article VII of the Peace Agreement and the OBMP Implementation Plan only. The Parties hereby acknowledge that this waiver is an essential and material term of this release. The Parties, and each of them, acknowledge that Civil Code section 1542 provides as follows:

A GENERAL RELEASE DOES NOT EXTEND TO CLAIMS WHICH THE CREDITOR DOES NOT KNOW OR SUSPECT TO EXIST IN HIS OR HER FAVOR AT THE TIME OF EXECUTING THE RELEASE, WHICH IF KNOWN BY HIM OR HER MUST HAVE MATERIALLY AFFECTED HIS OR HER SETTLEMENT WITH THE DEBTOR.

Each Party understands and acknowledges that the significance and consequence of this waiver of Civil Code section 1542 is the waiver of any presently unknown claims as described above, and that if any Party should eventually suffer additional damages arising out of the respective claim that Party will not be able to make any claim for those additional damages. Further, all Parties to this Agreement acknowledge that they consciously intend these consequences even as to claims for such damages that may exist as of the date of this Agreement but which are not known to exist and which, if known, would materially affect the Parties' respective decision to execute this Agreement, regardless of whether the lack of knowledge is the result of ignorance, oversight, error, negligence, or any other cause.

10.5 Assessments. In view of the substantial investments previously made and contemplated by Watermaster and the parties over the term of the Peace Agreement and in particular to implement the OBMP, the parties desire substantial certainty regarding Watermaster's principles of cost allocation. The principles set forth in the Peace Agreement and the

Peace II Measures including those stated herein, constitute a fair and reasonable allocation of responsibility among the stakeholders. Accordingly, other than in the event of an emergency condition requiring prompt action by Watermaster or to correct a manifest injustice arising from conditions not presently prevailing in the Basin and unknown to Watermaster and the parties and then only to the extent Watermaster retains discretion, Watermaster will maintain the principles of cost allocation for apportioning costs and assessments as provided in the Judgment and now implemented through the Peace Agreement and the Peace II Measures for the balance of the initial Term of the Peace Agreement. For the balance of the initial Term of the Peace Agreement, the parties to the Peace II Agreement will waive any objections to the Watermaster's principles of cost allocation other than as to issues regarding whether Watermaster has: (i) properly followed appropriate procedures; (ii) correctly computed assessments and charges; and (iii) properly reported .

10.6 Reservation of Rights. Nothing herein shall be construed as precluding any party to the Judgment from seeking judicial review of any Watermaster action on the grounds that Watermaster has failed to act in accordance with the Peace Agreement as amended, this Agreement, the Amended Judgment, the OBMP Implementation Plan as amended and applicable law.

ARTICLE XI
TERM

11.1 Commencement. This Agreement will become effective upon the satisfaction of all conditions precedent and shall expire on the Termination Date.

11.2 Termination. This Agreement is coterminous with the initial term of the Peace Agreement and will expire of its own terms and terminate on the date of the Initial Term of the Peace Agreement.

ARTICLE XIII
GENERAL PROVISIONS

12.1 Construction of this Agreement. Each Party, with the assistance of competent legal counsel, has participated in the drafting of this Agreement and any ambiguity should not be construed for or against any Party on account of such drafting.

12.2 Awareness of Contents/Legal Effect. The Parties expressly declare and represent that they have read the Agreement and that they have consulted with their respective counsel regarding the meaning of the terms and conditions contained herein. The parties further expressly declare and represent that they fully understand the content and effect of this Agreement and they approve and accept the terms and conditions contained herein, and that this Agreement is executed freely and voluntarily.

12.3 Counterparts. This Agreement may be executed in counterparts. This Agreement shall become operative as soon as one counterpart hereof has been executed by each Party. The counterparts so executed shall constitute on Agreement notwithstanding that the signatures of all Parties do not appear on the same page.

IN WITNESS THEREOF, the Parties hereto have set forth their signatures as of the date written below:

Dated:

Party: _____

By _____

Attachment L

September 21, 2007

ATTACHMENT "L"

SECOND AMENDMENT
TO PEACE AGREEMENT

THIS SECOND AMENDMENT TO PEACE AGREEMENT ("AGREEMENT") is dated the ____ of September 2007 regarding the Chino Groundwater Basin.

RECITALS

A. The Parties entered into that certain "Peace Agreement" dated June 29, 2000. The Peace Agreement was approved by the Court in San Bernardino Superior Court Case No. RCV 51010.

B. The Parties entered into a First Amendment to the Peace Agreement on September 2nd of 2004 regarding the deletion of Salt Credits and the Stormwater Component of New Yield.

NOW THEREFORE, in consideration of the covenants and conditions herein contained, and for other good and valuable consideration the receipt of which is hereby acknowledged, the Parties agree as follows:

AGREEMENT

Section 1. **OBMP Credits Modified.** The Peace Agreement § 5.4(d) will be amended to read:

(d) Watermaster shall adopt reasonable procedures to evaluate requests for OBMP credits against future OBMP Assessments or for reimbursement. Any Producer or party to the Judgment, including but not limited to the State of California, may make application to Watermaster for reimbursement or credit against future OBMP Assessments for any capital or operations and maintenance expenses incurred in the implementation of any project or program, including the cost of relocating groundwater Production facilities, that carries out the purposes of the OBMP and specifically relates to the prevention of subsidence in the Basin, in advance of construction or that is prospectively dedicated to service of the stated goals of the OBMP. Watermaster shall exercise reasonable discretion in making its determination, considering the importance of the project or program to the successful completion of the OBMP, the available alternative funding sources, and the professional engineering and design standards as may be applicable under the circumstances. However, Watermaster shall not approve such a request for reimbursement or credit against future OBMP Assessments under this section where the Producer or party to the Judgment was otherwise legally compelled to make the improvement.

Section 2. **Increase the Limit on Storage of Local Supplemental Water** The current cap of 50,000 acre-feet of Storage of Supplemental Water described in paragraph 5.2(b)(iv) and 5.2(b)(vii) of the Peace Agreement shall be increased from 50,000 to 100,000 acre-feet. Any Party to the Judgment may make Application to Watermaster to store Supplemental Water pursuant to the terms of section 5.2(b) of the Peace Agreement except that the rebuttable presumption applicable to Local Storage Agreements described in Peace Agreement paragraph 5.2(b)(v) shall no longer be in effect with regard to such applications.

Section 3. **Effect of Amendment.** Except as amended hereby, the Peace Agreement remains in full force and effect.

IN WITNESS WHEREOF, the Parties hereto have set forth their signatures as of the date written below:

The materials included as Exhibit 1 to the Peace II Agreement are included as attachments to Resolution 07-05 and the Resolution itself

Exhibit 2

Schedule A -- Pragmatic Schedule for the Planning, Design and Construction of the Chino Creek Well Field

ID	Task Name	Duration	Start	Finish
1				
2	**Prepare Project Description**	**110 days**	**Mon 4/2/07**	**Fri 8/31/07**
3	Prepare Draft Project Description	20 days	Mon 4/2/07	Fri 4/27/07
4	Circulate and Revise Draft Project Description	20 days	Mon 4/30/07	Fri 5/25/07
5	Finalize Draft Project Description	10 days	Mon 5/28/07	Fri 6/8/07
6	Prepare Screening-level Initial Study	60 days	Mon 6/11/07	Fri 8/31/07
7				
8	**Select Consultants**	**60 days**	**Mon 4/30/07**	**Fri 7/20/07**
9	Select CEQA Consultant	60 days	Mon 4/30/07	Fri 7/20/07
10	Select Well Design Consultant	60 days	Mon 4/30/07	Fri 7/20/07
11	Select Facilities Design Consultant	60 days	Mon 4/30/07	Fri 7/20/07
12	Select Program Manager	60 days	Mon 4/30/07	Fri 7/20/07
13				
14	**Select Well Sites**	**250 days**	**Mon 9/3/07**	**Fri 8/15/08**
15	Develop Three Well Field Alternatives	20 days	Mon 9/3/07	Fri 9/28/07
16	Determine Property Ownership in Each Well Field Alternative	20 days	Mon 10/1/07	Fri 10/26/07
17	Select Alternative Well Sites	20 days	Mon 10/29/07	Fri 11/23/07
18	**Implement Well Site Investigation Program**	**190 days**	**Mon 9/3/07**	**Fri 5/23/08**
19	Develop Investigation Plan	20 days	Mon 9/3/07	Fri 9/28/07
20	Negotiate Access to Test Sites	40 days	Mon 11/26/07	Fri 1/18/08
21	Obtain Permits	5 days	Mon 1/21/08	Fri 1/25/08
22	Prepare Bid Package	30 days	Mon 10/1/07	Fri 11/9/07
23	Advertise	25 days	Mon 11/12/07	Fri 12/14/07
24	Select Contractor	0 days	Fri 12/14/07	Fri 12/14/07
25	Negotiate Contract	20 days	Mon 12/17/07	Fri 1/11/08
26	Construct Test Wells, Run Stress Test and WQ Tests	80 days	Mon 1/21/08	Fri 5/9/08
27	Characterize Production Requirements and Water Quality	0 days	Fri 5/9/08	Fri 5/9/08
28	Revise Well Field Design	10 days	Mon 5/12/08	Fri 5/23/08
29	**Prepare Well Field Predesign Report**	**60 days**	**Mon 5/26/08**	**Fri 8/15/08**
30	Prepare Draft Report	20 days	Mon 5/26/08	Fri 6/20/08
31	Circulate and Revise Predesign Report	20 days	Mon 6/23/08	Fri 7/18/08
32	Finalize Predesign Report	20 days	Mon 7/21/08	Fri 8/15/08
33				
34	**CEQA Process for Chino Creek Well Field**	**312 days**	**Mon 6/23/08**	**Tue 9/1/09**
35	**Prepare Final Project Description**	**35 days**	**Mon 6/23/08**	**Fri 8/8/08**
36	Prepare Final Project Description	5 days	Mon 6/23/08	Fri 6/27/08
37	Circulate and Revise Final Project Description	20 days	Mon 6/30/08	Fri 7/25/08
38	Finalize Project Description	10 days	Mon 7/28/08	Fri 8/8/08
39	Prepare Initial Study	30 days	Mon 8/11/08	Fri 9/19/08
40	Prepare Notice of Preparation (NOP)	5 days	Mon 9/22/08	Fri 9/26/08
41	Circulate NOP	20 days	Mon 9/29/08	Fri 10/24/08
42	Conduct Public Meeting Regarding NOP	0 days	Fri 10/24/08	Fri 10/24/08
43	**Prepare Draft EIR**	**162 days**	**Mon 10/27/08**	**Tue 6/9/09**
44	Prepare Administrative Draft EIR	90 days	Mon 10/27/08	Fri 2/27/09
45	Circulate and Review Administrative Draft	20 days	Mon 3/2/09	Fri 3/27/09
46	Prepare Draft EIR	20 days	Mon 3/30/09	Fri 4/24/09
47	Review Period for Draft EIR	32 days	Mon 4/27/09	Tue 6/9/09
48	Public Review Meeting	0 days	Tue 6/9/09	Tue 6/9/09
49	**Finalize EIR**	**60 days**	**Wed 6/10/09**	**Tue 9/1/09**
50	Prepare Response to Comments	30 days	Wed 6/10/09	Tue 7/21/09
51	Circulate and Review Responses to Comments	10 days	Wed 7/22/09	Tue 8/4/09
52	Prepare Final EIR	20 days	Wed 8/5/09	Tue 9/1/09
53	Certify Final EIR	0 days	Tue 9/1/09	Tue 9/1/09
54				
55	**Select Well Field Alternative**	**632 days**	**Mon 4/2/07**	**Tue 9/1/09**
56	Negotiate Chino Airport/County Contribution	130 days	Mon 4/2/07	Fri 9/28/07
57	Negotiate OIA PRPs Contribution	520 days	Wed 4/18/07	Tue 4/14/09
58	Select Well Field	0 days	Tue 9/1/09	Tue 9/1/09
59				

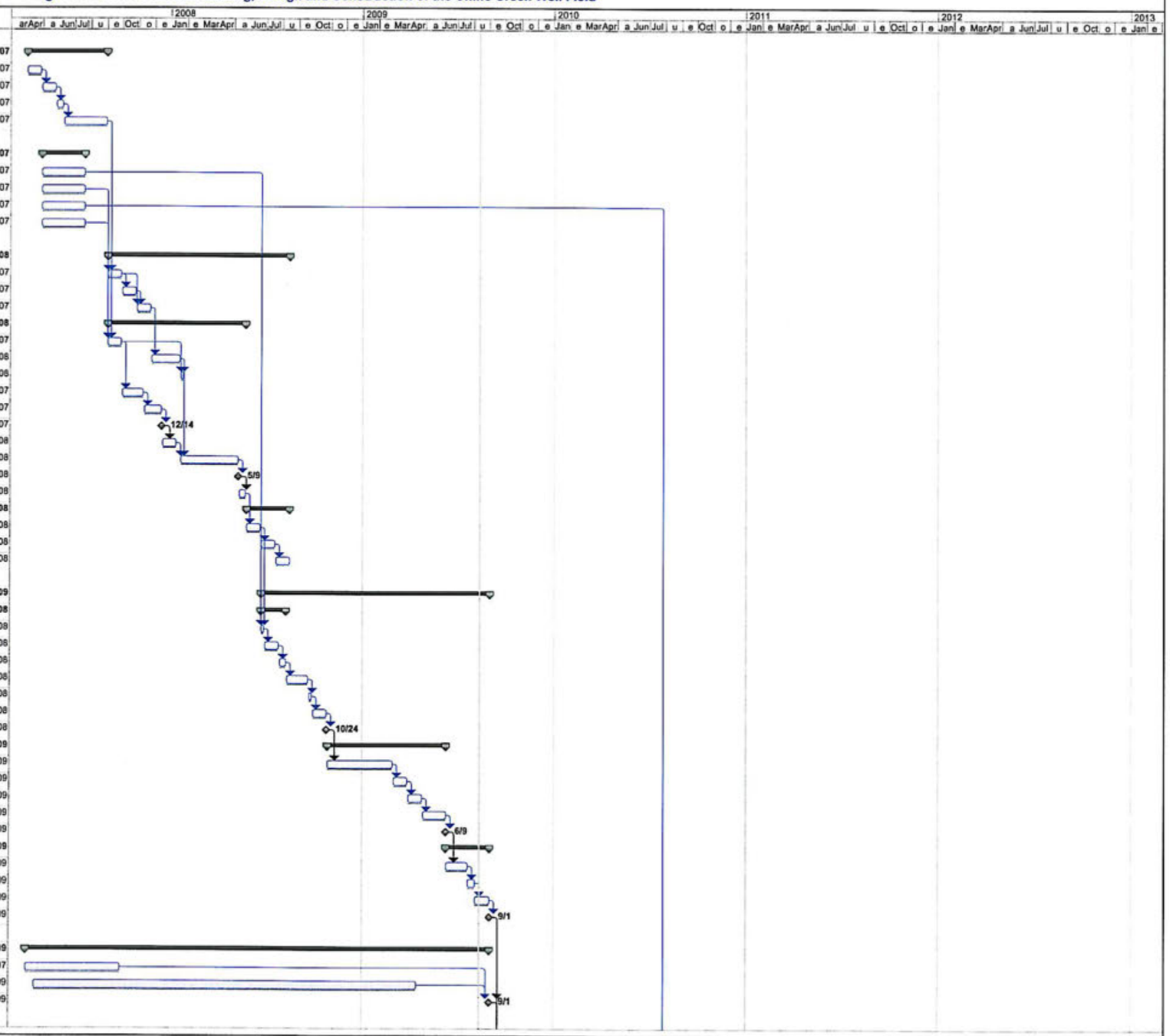

Project: 20070329 Schedule A Chino C
Date: Wed 8/12/09

Task — Progress — Summary — External Tasks — Split
Split — Milestone — Project Summary — External MileTask

Schedule A -- Pragmatic Schedule for the Planning, Design and Construction of the Chino Creek Well Field

ID	Task Name	Duration	Start	Finish
60	**Final Design of Well Field**	**285 days**	**Wed 9/2/09**	**Tue 10/5/10**
61	**Obtain Wells Sites**	**140 days**	**Wed 9/2/09**	**Tue 3/16/10**
62	Prepare Legal Descriptions	20 days	Wed 9/2/09	Tue 9/29/09
63	Establish Value	20 days	Wed 9/2/09	Tue 9/29/09
64	Negotiate Site Acquisition	60 days	Wed 9/30/09	Tue 12/22/09
65	**Obtain Raw Water Pipeline Easements**	**60 days**	**Wed 12/23/09**	**Tue 3/16/10**
66	Prepare Legal Description	20 days	Wed 12/23/09	Tue 1/19/10
67	Negotiate Easements	40 days	Wed 1/20/10	Tue 3/16/10
68	**Prepare Final Well Field Design**	**285 days**	**Wed 9/2/09**	**Tue 10/5/10**
69	Prepare Plans and Specifications for Wells	40 days	Wed 9/2/09	Tue 10/27/09
70	Prepare Bid Package	20 days	Wed 10/28/09	Tue 11/24/09
71	Advertise	25 days	Wed 11/25/09	Tue 12/29/09
72	Select Contractor	0 days	Tue 12/29/09	Tue 12/29/09
73	Negotiate Contract	20 days	Wed 12/30/09	Tue 1/26/10
74	Construct Six New Wells	130 days	Wed 1/27/10	Tue 7/27/10
75	Finalize Well Production and WQ Characteristic	0 days	Tue 7/27/10	Tue 7/27/10
76	**Prepare Well Construction Report**	**50 days**	**Wed 7/28/10**	**Tue 10/5/10**
77	Prepare Draft Well Construction Report	20 days	Wed 7/28/10	Tue 8/24/10
78	Circulate and Review Draft	15 days	Wed 8/25/10	Tue 9/14/10
79	Finalize Well Construction Report	15 days	Wed 9/15/10	Tue 10/5/10
80				
81	**Design and Construct Pipeline, Wellhead, and Treatment Plant Improvements**	**635 days**	**Wed 7/28/10**	**Tue 1/1/13**
82	Prepare 30 Percent Design Report	40 days	Wed 7/28/10	Tue 9/21/10
83	Prepare 50 Percent Design Report	25 days	Wed 9/22/10	Tue 10/26/10
84	Prepare 70 Percent Design Report	25 days	Wed 10/27/10	Tue 11/30/10
85	Prepare Final Design Report	30 days	Wed 12/1/10	Tue 1/11/11
86	Prepare Plans and Specifications	60 days	Wed 1/12/11	Tue 4/5/11
87	Prepare Bid Package	20 days	Wed 4/6/11	Tue 5/3/11
88	Advertise	25 days	Wed 5/4/11	Tue 6/7/11
89	Select Contractor	0 days	Tue 6/7/11	Tue 6/7/11
90	Negotiate Contracts	40 days	Wed 6/8/11	Tue 8/2/11
91	Construct Raw Water Pipeline	270 days	Wed 8/3/11	Tue 8/14/12
92	Construct Wellhead Improvements	270 days	Wed 8/3/11	Tue 8/14/12
93	Construct Desalter I Improvements	270 days	Wed 8/3/11	Tue 8/14/12
94	Construction Complete	0 days	Tue 8/14/12	Tue 8/14/12
95	**Prepare Construction Report**	**100 days**	**Wed 8/15/12**	**Tue 1/1/13**
96	Prepare Draft Construction Report	40 days	Wed 8/15/12	Tue 10/9/12
97	Circulate and Review Draft	40 days	Wed 10/10/12	Tue 12/4/12
98	Finalize Construction Report	20 days	Wed 12/5/12	Tue 1/1/13
99				
100	Start Up Testing of Improvements	60 days	Wed 8/15/12	Tue 11/6/12
101	Start of Regular Operations	0 days	Tue 11/6/12	Tue 11/6/12

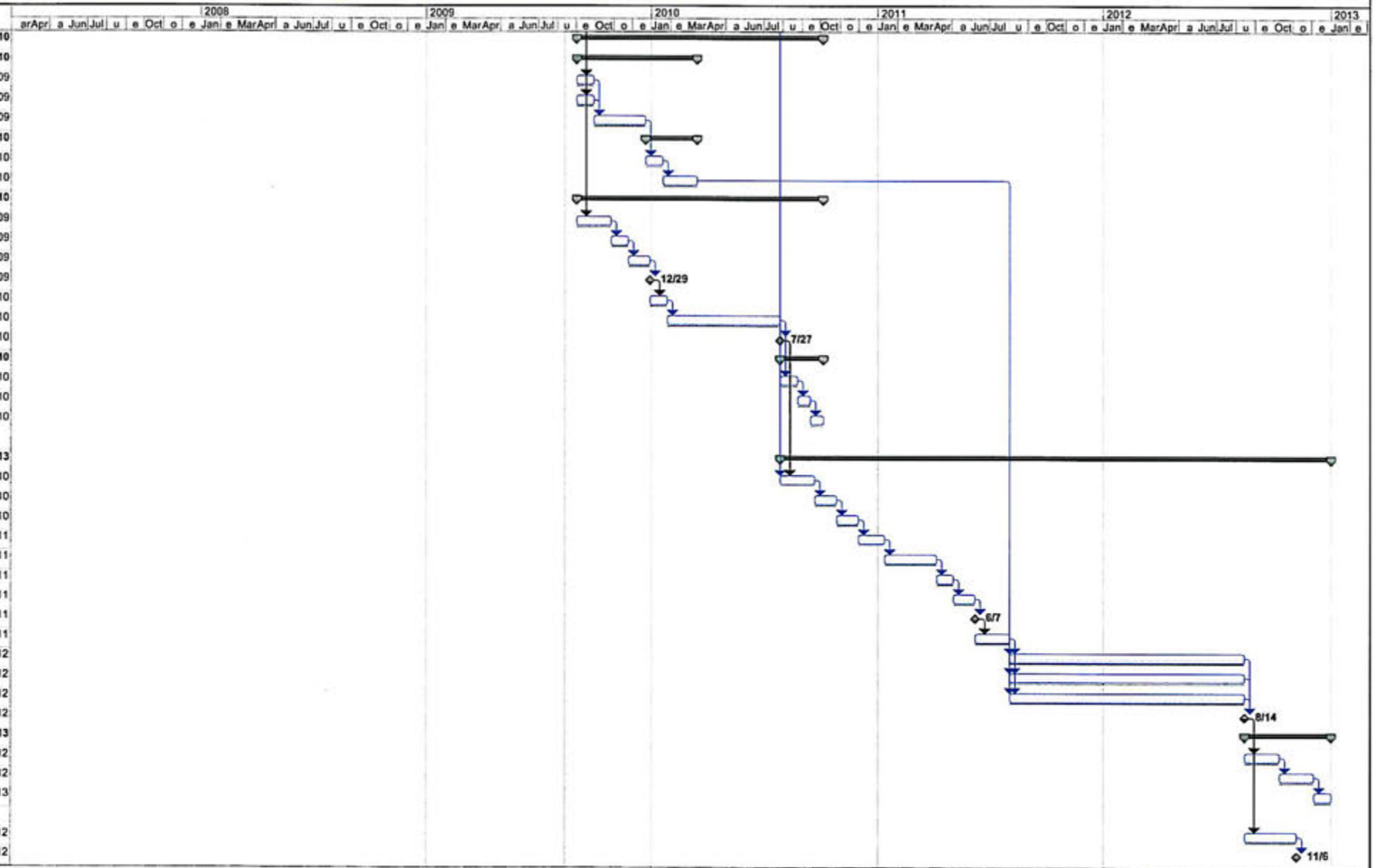

Project: 20070329 Schedule A Chino C
Date: Wed 8/12/09

Task — Progress — Summary — External Tasks — Split
Split — Milestone — Project Summary — External MileTask

Schedule B -- Accelerated Schedule for the Planning, Design and Construction of the Chino Creek Well Field

ID	Task Name	Start	Finish
1			
2	**Prepare Project Description**	**Mon 4/2/07**	**Fri 8/31/07**
3	Prepare Draft Project Description	Mon 4/2/07	Fri 4/27/07
4	Circulate and Revise Draft Project Description	Mon 4/30/07	Fri 5/25/07
5	Finalize Draft Project Description	Mon 5/28/07	Fri 6/8/07
6	Prepare Screening-Level Initial Study	Mon 6/11/07	Fri 8/31/07
7			
8	**Select Consultants**	**Mon 4/30/07**	**Fri 7/20/07**
9	Select CEQA Consultant	Mon 4/30/07	Fri 7/20/07
10	Select Well Design Consultant	Mon 4/30/07	Fri 7/20/07
11	Select Facilities Design Consultant	Mon 4/30/07	Fri 7/20/07
12	Select Program Manager	Mon 4/30/07	Fri 7/20/07
13			
14	**Select Well Sites**	**Mon 9/3/07**	**Fri 8/15/08**
15	Develop Three Well Field Alternatives	Mon 9/3/07	Fri 9/28/07
16	Determine Property Ownership in Each Well Field Alternative	Mon 10/1/07	Fri 10/26/07
17	Select Alternative Well Sites	Mon 10/29/07	Fri 11/23/07
18	**Implement Well Site Investigation Program**	**Mon 9/3/07**	**Fri 5/23/08**
19	Develop Investigation Plan	Mon 9/3/07	Fri 9/28/07
20	Negotiate Access to Test Sites	Mon 11/26/07	Fri 1/18/08
21	Obtain Permits	Mon 1/21/08	Fri 1/25/08
22	Prepare Bid Package	Mon 10/1/07	Fri 11/9/07
23	Advertise	Mon 11/12/07	Fri 12/14/07
24	Select Contractor	Fri 12/14/07	Fri 12/14/07
25	Negotiate Contract	Mon 12/17/07	Fri 1/11/08
26	Construct Test Wells, Run Stress Test and WQ Tests	Mon 1/21/08	Fri 5/9/08
27	Characterize Production Requirements and Water Quality	Fri 5/9/08	Fri 5/9/08
28	Revise Well Field Design	Mon 5/12/08	Fri 5/23/08
29	**Prepare Well Field Predesign Report**	**Mon 5/26/08**	**Fri 8/15/08**
30	Prepare Draft Report	Mon 5/26/08	Fri 6/20/08
31	Circulate and Revise Predesign Report	Mon 6/23/08	Fri 7/18/08
32	Finalize Predesign Report	Mon 7/21/08	Fri 8/15/08
33			
34	**CEQA Process for Chino Creek Well Field**	**Mon 6/23/08**	**Fri 12/5/08**
35	**Prepare Final Project Description**	**Mon 6/23/08**	**Fri 8/8/08**
36	Prepare Final Project Description	Mon 6/23/08	Fri 6/27/08
37	Circulate and Revise Final Project Description	Mon 6/30/08	Fri 7/25/08
38	Finalize Project Description	Mon 7/28/08	Fri 8/8/08
39	Prepare Initial Study	Mon 8/18/08	Fri 9/26/08
40	Prepare Mitigated Negative Declaration	Mon 9/29/08	Fri 10/10/08
41	Circulate Mitigated Negative Declaration	Mon 10/13/08	Fri 11/7/08
42	Conduct Public Meeting Regarding Mitigated Negative Declaration	Fri 11/7/08	Fri 11/7/08
43	Prepare Response to Comments	Mon 11/10/08	Fri 11/28/08
44	Prepare Final Mitigated Negative Declaration	Mon 12/1/08	Fri 12/5/08
45	IEUA Adopts Mitigated Negative Declaration	Fri 12/5/08	Fri 12/5/08
46			
47	**Select Well Field Alternative**	**Wed 4/18/07**	**Fri 12/5/08**
48	Negotiate Chino Airport/County Contribution	Wed 4/18/07	Tue 10/16/07
49	Select Well Field	Fri 12/5/08	Fri 12/5/08
50			
51	**Final Design of Well Field**	**Mon 12/8/08**	**Fri 1/8/10**
52	**Obtain Wells Sites**	**Mon 12/8/08**	**Fri 6/19/09**
53	Prepare Legal Descriptions	Mon 12/8/08	Fri 1/2/09
54	Establish Value	Mon 12/8/08	Fri 1/2/09

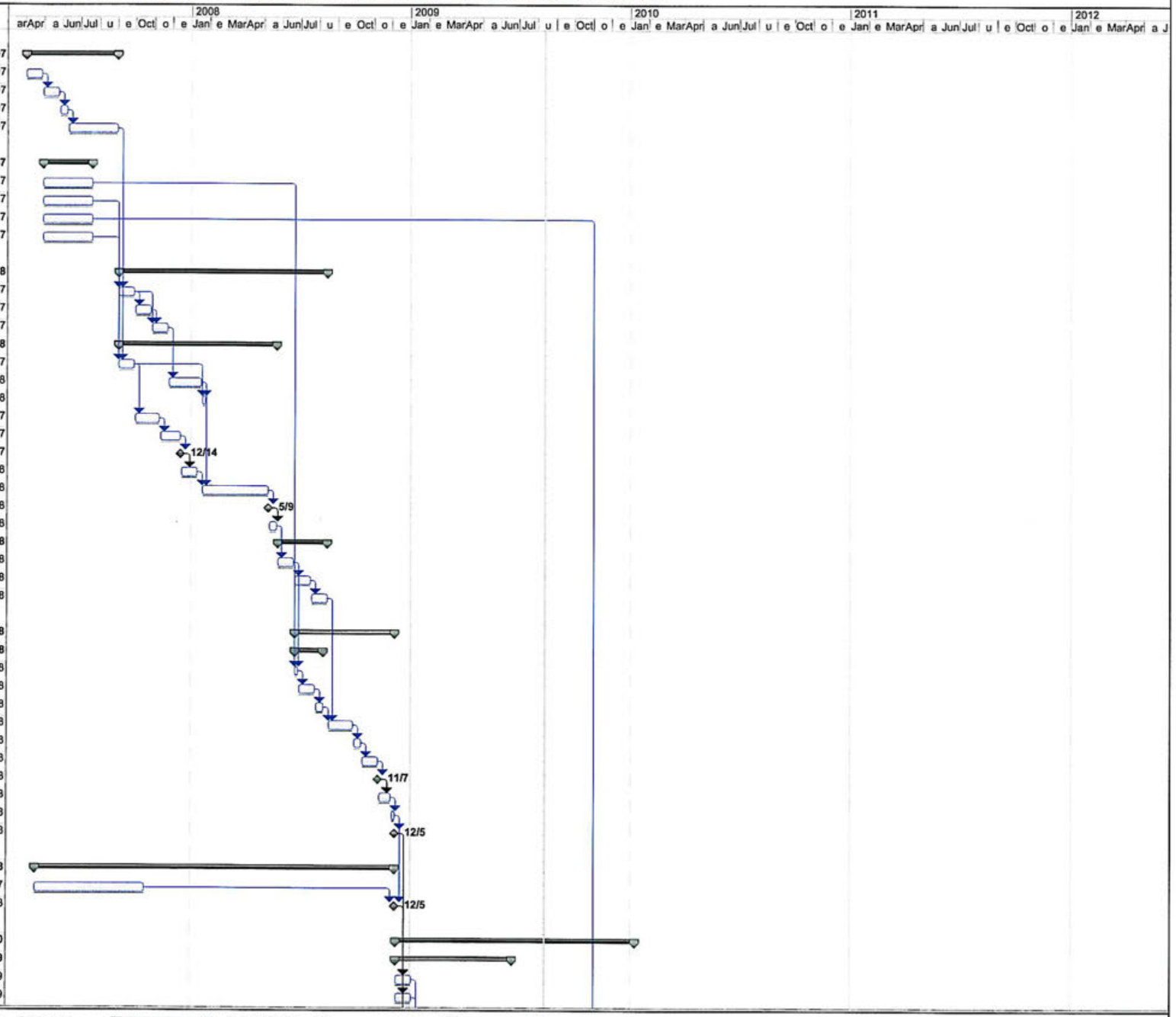

Project: 20070329 Schedule B Chino C
Date: Wed 9/12/07

Task — Progress — Summary — External Tasks — Split
Split — Milestone — Project Summary — External MileTask

Schedule B -- Accelerated Schedule for the Planning, Design and Construction of the Chino Creek Well Field

ID	Task Name	Start	Finish
55	Negotiate Site Acquisition	Mon 1/5/09	Fri 3/27/09
56	**Obtain Raw Water Pipeline Easements**	**Mon 3/30/09**	**Fri 6/19/09**
57	Prepare Legal Description	Mon 3/30/09	Fri 4/24/09
58	Negotiate Easements	Mon 4/27/09	Fri 6/19/09
59	**Prepare Final Well Field Design**	**Mon 12/8/08**	**Fri 1/8/10**
60	Prepare Plans and Specifications for Wells	Mon 12/8/08	Fri 1/30/09
61	Prepare Bid Package	Mon 2/2/09	Fri 2/27/09
62	Advertise	Mon 3/2/09	Fri 4/3/09
63	Select Contractor	Fri 4/3/09	Fri 4/3/09
64	Negotiate Contract	Mon 4/6/09	Fri 5/1/09
65	Construct Six New Wells	Mon 5/4/09	Fri 10/30/09
66	Finalize Well Production and WQ Characteristics	Fri 10/30/09	Fri 10/30/09
67	**Prepare Well Construction Report**	**Mon 11/2/09**	**Fri 1/8/10**
68	Prepare Draft Well Construction Report	Mon 11/2/09	Fri 11/27/09
69	Circulate and Review Draft	Mon 11/30/09	Fri 12/18/09
70	Finalize Well Construction Report	Mon 12/21/09	Fri 1/8/10
71			
72	**Design and Construct Pipeline, Wellhead, and Treatment Plant Improvemer**	**Mon 11/2/09**	**Fri 4/6/12**
73	Prepare 30 Percent Design Report	Mon 11/2/09	Fri 12/25/09
74	Prepare 50 Percent Design Report	Mon 12/28/09	Fri 1/29/10
75	Prepare 70 Percent Design Report	Mon 2/1/10	Fri 3/5/10
76	Prepare Final Design Report	Mon 3/8/10	Fri 4/16/10
77	Prepare Plans and Specifications	Mon 4/19/10	Fri 7/9/10
78	Prepare Bid Package	Mon 7/12/10	Fri 8/6/10
79	Advertise	Mon 8/9/10	Fri 9/10/10
80	Select Contractor	Fri 9/10/10	Fri 9/10/10
81	Negotiate Contracts	Mon 9/13/10	Fri 11/5/10
82	Construct Raw Water Pipeline	Mon 11/8/10	Fri 11/18/11
83	Construct Wellhead Improvements	Mon 11/8/10	Fri 11/18/11
84	Construct Desalter I Improvements	Mon 11/8/10	Fri 11/18/11
85	Construction Complete	Fri 11/18/11	Fri 11/18/11
86	**Prepare Construction Report**	**Mon 11/21/11**	**Fri 4/6/12**
87	Prepare Draft Construction Report	Mon 11/21/11	Fri 1/13/12
88	Circulate and Review Draft	Mon 1/16/12	Fri 3/9/12
89	Finalize Construction Report	Mon 3/12/12	Fri 4/6/12
90			
91	Start Up Testing of Improvements	Mon 11/21/11	Fri 2/10/12
92	Start of Regular Operations	Fri 2/10/12	Fri 2/10/12

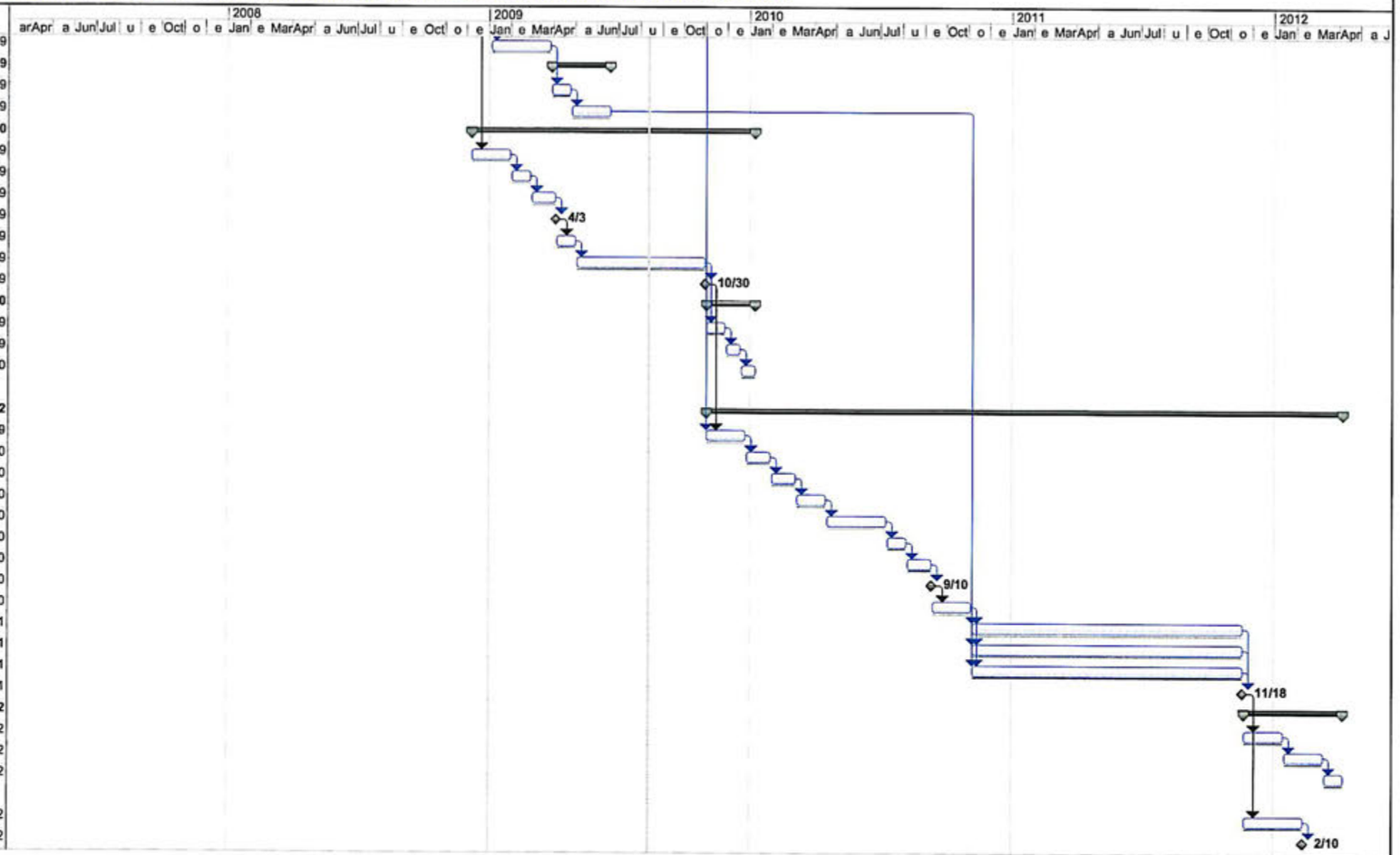

Project: 20070329 Schedule B Chino C
Date: Wed 9/12/07

Task | Progress | Summary | External Tasks | Split
Split | Milestone | Project Summary | External MileTask

Exhibit 3

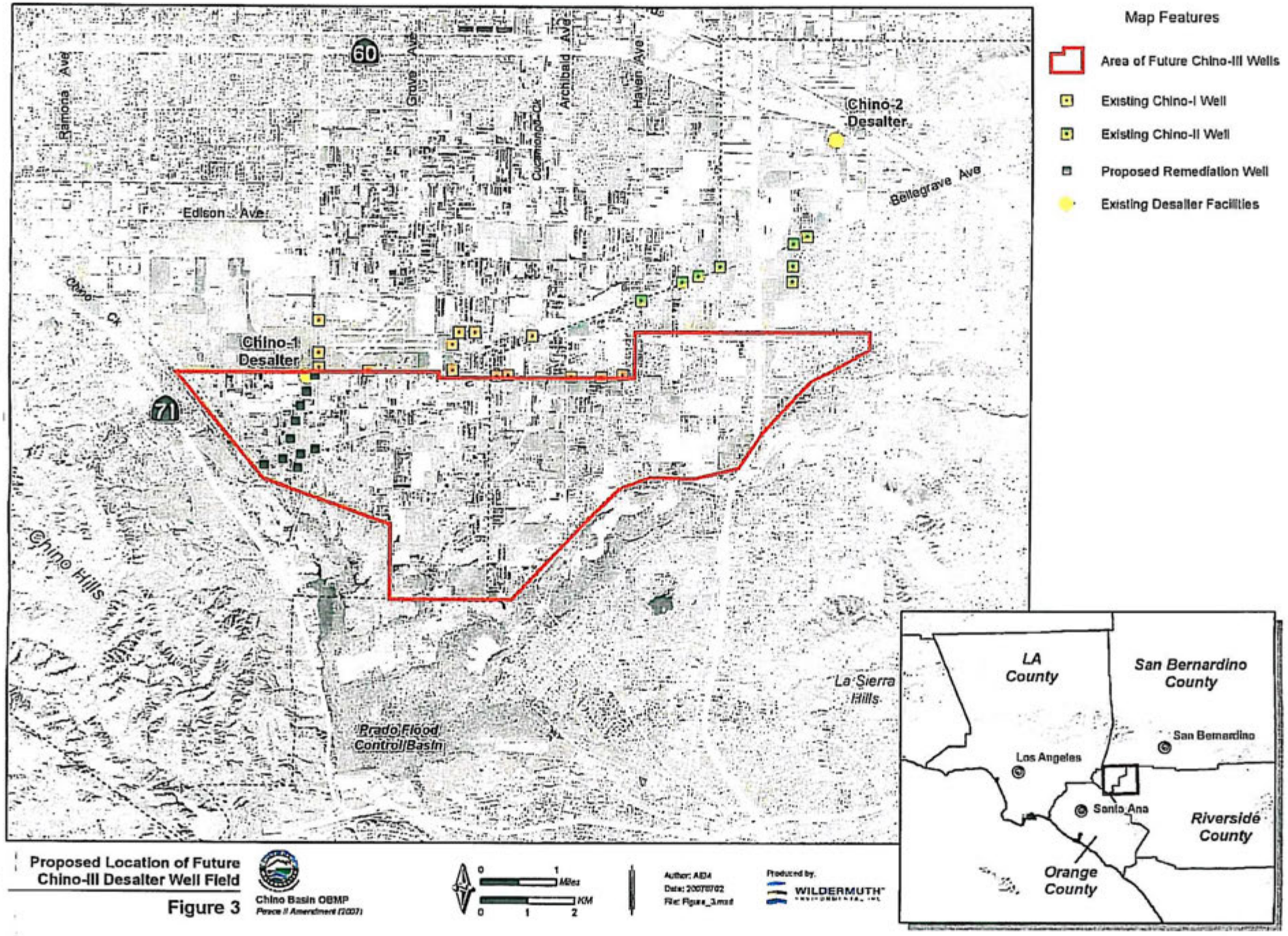

Proposed Location of Future Chino-III Desalter Well Field

Figure 3

Chino Basin OBMP
Peace II Amendment (2007)

APPENDIX P – CUCAMONGA BASE JUDGEMENT (1958 DECREE)

Appendix P

Cucamonga Basin Judgement (1958 Decree)

Recorded April 29,1958
Book 4495, page 331,
San Bernardino County
Official Records

WALKER, WRIGHT, TYLER & WARD
210 West 7th Street, Suite 631
Los Angeles 14, California
TRinity 8936

Attorneys for Plaintiff

IN THE SUPERIOR COURT OF THE STATE OF CALIFORNIA

IN AND FOR THE COUNTY OF SAN BERNARDINO

SAN ANTONIO WATER COMPANY, a corporation,

Plaintiff,

-vs-

FOOTHILL IRRIGATION COMPANY, a corporation; SUNSET WATER COMPANY, a corporation; IOAMOSA WATER COMPANY, a corporation; and OLD SETTLERS WATER COMPANY, a corporation; ALTA LOMA MUTUAL WATER COMPANY, a corporation; ARMSTRONG NURSERIES, a corporation; BANYAN HEIGHTS WATER COMPANY, a corporation; CARNELIAN WATER COMPANY, a corporation; CITRUS WATER COMPANY, a corporation; CUCAMONGA DEVELOPMENT COMPANY, a corporation; CUCAMONGA WATER COMPANY, a corporation; HEDGES WELL COMPANY, a corporation; HELLMAN WATER COMPANY, a corporation; HERMOSA WATER COMPANY, a corporation; JOYA MUTUAL WATER COMPANY, a corporation; REX MUTUAL WATER COMPANY, a corporation; SAPPHIRE MUTUAL WATER COMPANY, a corporation; CHARLES SNYDER; UPLAND WATER COMPANY, a corporation; HENRY G. BODKIN and BANK OF AMERICA NATIONAL TRUST AND SAVINGS ASSOCIATION, as Executors of the last will of Giovanni Vai, deceased; WESTERN FRUIT GROWERS, a corporation; HUGH P. CRAWFORD; G. N. HAMILTON RANCH, a partnership composed of Arthur Bridge, Helen Bridge, and Grace W. Burt; JOHN DOE ONE to THIRTY inclusive, MARY ROE ONE to THIRTY inclusive, JOHN DOE COMPANY ONE to TWENTY inclusive,

Defendants.

No. 92645

D E C R E E

WHEREAS, there has been filed in the above entitled action, a Stipulation for Judgment duly executed by and on the part of each and all of the following named parties to said action (who are collectively hereinafter referred to as the "stipulating parties"), to wit:

San Antonio Water Company, a corporation;

Foothill Irrigation Company, a corporation;

Ioamosa Water Company, a corporation;

Old Settlers Water Company, a corporation;

Sunset Water Company, a corporation;

Cucamonga Water Company, a corporation;

Alta Loma Mutual Water Company, a corporation;

Armstrong Nurseries, a corporation;

Banyan Heights Water Company, a corporation;

Carnelian Water Company, a corporation;

Citrus Water Company, a corporation;

Hedges Well Company, a corporation;

Hellman Water Company, a corporation;

Hermosa Water Company, a corporation;

Joya Mutual Water Company, a corporation;

Upland Water Company, a corporation;

Western Fruit Growers, a corporation;

Cucamonga Development Company, a corporation;

Sapphire Mutual Water Company, a corporation;

Charles Snyder;

Hugh P. Crawford;

Bank of America National Trust and Savings Association, a national banking association, and Henry G. Bodkin, as executors of the last Will of Giovanni Vai, deceased;

G. N. Hamilton Ranch, a partnership composed of Arthur Bridge, Helen Bridge, Grace W. Burt;

SUER & HELLYER
ATTORNEYS AT LAW
SAN BERNARDINO, CALIFORNIA

and Rex Mutual Water Company.

and,

WHEREAS, the Court has heard and considered evidence on the part of various of the stipulating parties,

NOW, THEREFORE, IT IS HEREBY ORDERED, ADJUDGED AND DECREED by this Court that:

FIRST: As used herein, the terms listed below shall have the respective meanings next following them, viz:

(a) "Cucamonga Basin" or "Basin" shall mean that certain territory in the County of San Bernardino, State of California, which is more particularly described upon Exhibit 1, and shall also include all percolating water and underground water and water sources underlying said territory;

(b) "Imported water" shall mean water derived from a stream flow in an area outside of any water shed draining into the Cucamonga Basin. Specifically, water derived from San Antonio Canyon and/or Creek is "imported water".

(c) "Irrigation season" shall mean that portion of each year when irrigating is required by the users of the water sold by the Plaintiffs and Defendants hereto. While this period varies considerably from year to year, the irrigating season generally commences during any month in which the rainfall does not exceed two inches, and the season generally terminates after the first rainfall of two inches or more. The season usually approximates the period from May 1st to November 1st.

"Spreading season" is the balance of each year remaining after deducting the irrigation season for such year, and is usually approximately the period from November 1st of one year to May 1st of the succeeding year.

"Spread" with respect to water shall mean to conduct the same upon and sink the same into the gravels of Cucamonga Basin during a spreading season.

SUTER & HELLYER
ATTORNEYS AT LAW
SAN BERNARDINO, CALIFORNIA

(d) "Aggregate stipulated water" means the total number of acre feet of water set opposite the names of all stipulating parties in Exhibit 2.

(e) "Pro-rata" means, in each case, in the same proportion as the acre feet listed opposite the name or names of the party or respective parties in question bear to the aggregate stipulated water; and the verb "pro-rate" means to divide and share pro-rata among the stipulating parties.

(f) "Allocated water" of any stipulating party or parties in each case means the number of acre feet of water set out on Exhibit 2 opposite the name or names of such party or parties.

(g) "Ten preceding years" means the period of ten consecutive calendar years which immediately precedes or has preceded the year or event mentioned.

(h) "Five-sixths of the water users" shall mean stipulating parties having in the aggregate allocated water which is not less than five-sixths of the total allocated water of all stipulating parties.

(i) An "inch" of water or a "miner's inch" of water shall mean a flow of water equal to one-fiftieth (1/50th) of a cubic foot of water per second of time.

(j) Any party hereto the corporate name of which ends with "Water Company" or "Mutual Water Company" will be hereinafter referred to without such words. Thus "San Antonio" means herein "San Antonio Water Company" and similarly with the other parties using said words "Water Company" or "Mutual Water Company".

(k) "Canyon pipeline" shall mean the pipeline (varying in size between approximately 32 inches in inside diameter and about 18 inches) which extends Southerly from a point on the channel of Cucamonga Creek at an elevation of approximately 2350 feet above sea level (herein called "Northerly intake") to the "round weir" mentioned below.

ZUBER & HELLYER
ATTORNEYS AT LAW
San Bernardino, California

(l) "Round weir" shall mean that certain weir of Ioamosa marked on the map Exhibit 3 as "Round Weir"and located near the top of the bluff on the East side of Cucamonga Creek and just Northerly from the Westerly prolongation of Almond Street, said weir being the point from which (a) two ten-inch water lines marked on the map Exhibit 3 as "Ioamosa 10 inch" lead Easterly to Ioamosa's Carnelian Street Reservoir (at about elevation 2030 feet above sea level on the East side of Carnelian Street between Hillside Road and Almond Street);(b) a six-inch water line marked on the map Exhibit 3 as "Hamilton 6 inch"leads Southeasterly to the Hamilton Ranch(which lies South of Hillside Road,North of Banyan Street,East of Sapphire Street and West of Carnelian Street),and,(c) an eight-inch water line marked on the map Exhibit 3 as "Banyan 8 inch" runs Southerly down Topaz Street to connect with the water system of Banyan Heights.

(m) "Reservoir Weir" means the weir of Ioamosa located at the Carnelian Street Reservoir.

(n)"Ioamosa Southerly Intake" shall mean a line extending West across the channel of Cucamonga Creek from the existing"Canyon Weir" of Ioamosa marked on the map Exhibit 3 as "Canyon Weir",which weir is located in Cucamonga Canyon,is part of the Canyon pipeline, and is situated about midway (or somewhat Northerly thereof)between the round weir and the Northerly intake mentioned above.

(o) "Schulhof pipe-line" means that certain three-inch water pipe-line marked on the map Exhibit 3 as "Schulhof 3 inch" which connects with the Canyon pipe-line Northerly of the round weir, and which is mentioned in paragraph Second(h) of that certain decree dated April 12, 1937, in action No. 29,799 (Schulhof v. Cucamonga Development Company) in the above entitled Superior Court.

(p) The water to which Ioamosa is entitled as provided in paragraph "Third" hereof is herein called "Ioamosa gravity water", or "gravity water".

(q) "An overflow year"shall mean any calendar year for which

GURR & HELLYER
ATTORNEYS AT LAW
SAN BERNARDINO, CALIFORNIA

the water level determined as hereinafter provided in the index well is at an elevation of 1345 feet or higher above sea level.

For the purposes of determination of elevation above sea level the United States Geological Survey bench mark on Baseline (also known as 16th Street) as it exists on the date this decree is entered, on or near the north boundary of Section 4, Township 1 South, Range 7 west, and approximately four-fifths of a mile west of Vineyard Avenue, shall be deemed to be at an elevation above sea level of 1454 feet. The elevation of the water level in such index well shall be determined by measuring the elevation of such water in such well on October 1st of each year (Provided that if any such day falls on a Sunday or a holiday, measurements shall be made on the next business day). The index well shall be the well known as Shaft No. 9-A of the San Antonio Water Company located approximately 154 feet Southerly of the Northwest corner of Lot 14 of Red Hill subdivision and shown on the map Exhibit 5. Wells No. 11 of Cucamonga Water Company and 20 and 22 of the San Antonio Water Company shall not be pumped within three days before such date of measurements, and the tunnel bulkhead adjacent to Red Hills Country Club will be kept closed for a like period before such date. If for any reason Shaft 9-A shall not be available for measurement, then the index well shall be Wells No. 11 of Cucamonga Water Company or 20 or 22 of the San Antonio Water Company, in the order herein listed. If for any reason none of said wells shall be available for such measurement, the identity and location of the index well may be determined by a written stipulation executed by five-sixths of the water users and filed in said action, or in default of said stipulation by order of the said court.

Annexed to this Decree and hereby incorporated herein are the following Exhibits:

Exhibit 1: A description of the territory under which lies the "Cucamonga Basin";

SURR & HELLYER
ATTORNEYS AT LAW
SAN BERNARDINO, CALIFORNIA

Exhibit 2: A list of the "allocated water" of each party (Other than the stream flow mentioned in paragraph "Third");

Exhibit 3: A map of "Cucamonga Pipe Lines";

Exhibit 4: A map of "Cucamonga Spreading Works";

Exhibit 5: A map of "Well and Shaft Locations";

and said exhibits are herein respectively referred to as "Exhibit 1", "Exhibit 2", "Exhibit 3", "Exhibit 4" and "Exhibit 5".

SECOND: This paragraph deals with the right and quantity of water San Antonio may annually hereafter extract from the Cucamonga Basin as reduced by its failure to previously annually spread therein the minimum amount of water hereinafter set forth, or as increased by its previously annually spreading more imported water therein than said minimum, excepting, however, in both such situations the spreading of imported water during years in which such spread causes the Basin to overflow resulting in such year constituting an overflow year, as defined in Paragraph First, subdivision (q) thereof.

For the purpose of the computation in this Paragraph Second, it shall be assumed that San Antonio has spread in each of the ten years previous to 1957, 2,000 acre feet of imported water.

With respect to each calendar year after entry of this decree each preceding ten year period shall be divided into "included" and "Excluded" years. "Excluded years" are those calendar years which are defined as overflow years in Paragraph First, subdivision (q) thereof. All other calendar years are "included years".

If in the ten preceding years San Antonio shall have spread less than 2,000 acre feet of imported water in any of the included years, as modified by the assumption above set forth, the difference between (a) The amount of imported water which shall have been so spread in such included years, and (b) The quantity of 2,000 acre feet multiplied by the number of included years, shall be known as the "ten year deficit".

Any right of San Antonio to extract water from the Cucamonga

SURR & HELLYER
ATTORNEYS AT LAW
SAN BERNARDINO, CALIFORNIA

Basin in any calendar year after the entry of this decree shall be reduced by the number of acre feet of water equal to the ten year deficit divided by the number of included years, if any such deficit shall have occurred, so that such right to extract water for such year shall not exceed 6,500 acre feet less the ten year deficit divided by the number of included years.

Correspondingly, with respect to each calendar year after the entry of this decree, if in the ten preceding years San Antonio shall have spread more than 2,000 acre feet of imported water in any of the included years, as modified by the assumption above set forth, the difference between (a) The amount of imported water which shall have been so spread in such included years, and (b) The quantity of 2,000 acre feet multiplied by the number of included years, shall be known as the "ten year surplus".

The right of San Antonio to extract water from the Cucamonga Basin in any calendar year after the entry of this decree, shall be increased by a number of acre feet of water equal to 95 percent of the ten year surplus divided by the number of included years, if any such surplus shall have occurred, so that there shall be added for such year to San Antonio's right to extract 6,500 acre feet of water a number of acre feet of water equal to 95 percent of the ten year surplus divided by the number of included years. Provided, however, that in no case shall such increased extraction exceed 2,000 acre feet of water for any one calendar year.

So long as the water level in the index well referred to in paragraph First, subdivision (q) herein is at an elevation below 1345 feet above sea level, and in the event San Antonio has available in any one calendar year after the year 1956 more than 2,000 acre feet of imported water, and desires to sell the same, it shall, before selling such imported water to others not parties to this Decree, annually offer to sell such imported water to the other stipulating parties hereto for spreading in the Cucamonga Basin and at a price to be fixed

SURR & HELLYER
ATTORNEYS AT LAW
SAN BERNARDINO, CALIFORNIA

between the parties by negotiation, but in any event to be not greater than the price San Antonio can obtain from others not parties of this Decree.

In the event San Antonio and the other stipulating parties hereto do not agree by October 1st to the terms for the purchase of said imported water to be sold and spread during the next succeeding spreading season, then San Antonio is thereafter free to sell such imported water to other persons not parties hereto, or at its option, it may spread such imported water in the Cucamonga Basin and by so spreading will receive the credit for water spread as provided in this paragraph Second. If the stipulating parties and San Antonio agree to the purchase from San Antonio of any imported water, and such stipulating parties, other than San Antonio, purchase said water and the same is spread in the Cucamonga Basin, then during such year no credit shall be given to San Antonio toward estimating its ten year surplus or deficit for the amount of water so purchased and spread.

THIRD: Ioamosa and Hamilton Ranch, a partnership composed of Arthur Bridge, Helen Bridge and Grace W. Burt, are the owners of the paramount right to take and divert throughout each year at or Northerly from the Ioamosa Southerly intake all surface and subsurface flow of Cucamonga Creek, not exceeding however two hundred fifty (250) miner's inches of water, (measured at the round weir and the intake to the Schulhof pipeline), including any water which shall be supplied to the Schulhof pipeline under the terms of said decree in action No. 29,799 or otherwise. The right to said flow of Cucamonga Creek up to 250 miner's inches per year is subject to an obligation of Hamilton Ranch and Ioamosa to deliver water into the Schulhof pipeline, and the balance of said water is owned by Hamilton Ranch and Ioamosa in the following proportions:

(a) Hamilton Ranch 128/1200ths thereof;

SURR & HELLYER
ATTORNEYS AT LAW
SAN BERNARDINO, CALIFORNIA

(b) Ioamosa 1072/1200ths thereof, subject to the right of Sapphire to the extent of one (1) inch from the weir box on Ioamosa's pipeline located approximately 1200 feet East of the "round weir".

The rights of Ioamosa to the Ioamosa gravity water are subject to the provisions hereof. Ioamosa may transport such gravity water to any location or locations whether within or without the basin, and use or deliver such water at any such location or location, provided, however, if any of the Ioamosa gravity water is used or conducted outside the Basin in any year, then the quantity of water which Ioamosa shall be entitled to develop or extract from the Basin by Paragraph Fourth and Exhibit 2 herein during the next succeeding year shall be reduced by an amount equal to the quantity of Ioamosa gravity water so used or conducted outside the Basin during such year.

The stipulating parties hereto shall within sixty (60) days after the date of this judgment, at their proportionate expense, construct in a manner which shall have been approved by San Antonio Water Company or by the above entitled Court a dividing weir located where Ioamosa now maintains the "round weir". Such dividing weir shall be so constructed that it will automatically limit to 249 inches the amount of water that will flow into the above mentioned four outgoing lines that are now connected with the round weir and are referred to in paragraph First (1) herein.

Within sixty (60) days after the date of this judgment the stipulating parties hereto shall also construct in a manner which shall have been approved by San Antonio Water Company or by the above entitled Court a dividing weir at the said Carnelian Street reservoir. The dividing weir at this point shall be so constructed as to permit Ioamosa to divert fifty inches of such Ioamosa gravity water to domestic use.

SURR & MELLYER
ATTORNEYS AT LAW
SAN BERNARDINO, CALIFORNIA

During each spreading season, the remaining amount of Ioamosa gravity water over and above fifty (50) inches, shall be either:

(a) Used for irrigation purposes over Cucamonga Basin; or,

(b) Spread over Cucamonga Basin in the spreading grounds of Ioamosa or Banyan Heights Water Company; or

(c) Returned by Ioamosa to the channel of Cucamonga Creek.

During each spreading season all of the flow of Cucamonga Creek in excess of such 250 inches after passing through the debris basins numbered C1 to C12 inclusive on Exhibit 4 shall be spread in spreading grounds which now exist, or are now under construction, or which are proposed, as shown on Exhibit 4, including the channel or wash of Cucamonga Creek, and which overlie the Cucamonga Basin and are North of Baseline Road. Whenever such spreading grounds are all overflowing, or would overflow, the waters which do or would so overflow may be spread in the "15th St. Spreading Grounds" as shown on said map, and when the "15th St. Spreading Grounds" also do or would overflow, the waters which do or would so overflow the "15th St. Spreading Grounds" may be spread in what is known as the "8th Street Spreading Grounds", all as shown on Exhibit 4, even though all or part of such spreading grounds do not overlie the Cucamonga Basin.

Such spreading shall be done at one or more locations in said spreading grounds which shall be approved by San Antonio.

Such flow of Cucamonga Creek may be spread at other locations than above provided, and outside the area above described upon the written consent of 5/6th of the water users, as defined in paragraph First subdivision (k) of this Decree.

If any costs are incurred in such spreading by any party hereto, for which such party would not otherwise be reimbursed, such costs shall be pro-rated between the parties hereto.

FOURTH: The rights of all stipulating parties to take water from Cucamonga Basin, subject to the adjustments set forth in this decree and to the provisions of paragraphs Second and Third above,

SURR & HELLYER
ATTORNEYS AT LAW
SAN BERNARDINO, CALIFORNIA

are hereby fixed at the quantities set forth in Exhibit 2. Such rights are correlative, and except as to quantity or as herein otherwise stated are equal. No stipulating party shall have any right to export water from the Cucamonga Basin or use water extracted from the Cucamonga Basin at any place other than over the Cucamonga Basin except as provided in paragraph Third and as follows:

(a) The following stipulating parties, or any of them, may use water which they are entitled to extract from Cucamonga Basin in any location whatsoever, namely, San Antonio, Cucamonga, Upland, Old Settlers, and Sunset.

(b) Hermosa, Foothill Irrigation Company and Alta Loma are entitled to export water from Cucamonga Basin only to the extent hereinafter set forth, and none of said parties shall ever export from the Basin more water than said "Export quantity"herein listed for it, to wit:

Party	Export Quantity
HERMOSA	343 Acre Feet
FOOTHILL IRRIGATION COMPANY	483 Acre Feet
ALTA LOMA	51 Acre Feet

and if in any year water used outside the basin which has been extracted or developed from the basin by any of said parties exceeds the "Export Quantity" above listed for such party, the quantity of water which such party shall be entitled to develop or extract from the basin in the ensuing year shall be reduced by an amount equal to such excess.

FIFTH: Within sixty (60) days after the date of this judgment, San Antonio shall, in the event it has not already done so, install, at the following locations, suitable recording and measuring devises, by means of which all spread water passing through such devices may be accurately measured and the quantity of such water recorded. Said locations are as follows:

(1) On 23rd Street at the Northeast corner of Ontario

SUNR & NELLYER
ATTORNEYS AT LAW
SAN BERNARDINO, CALIFORNIA

Colony Lot No. 170

(2) On 20th Street at the Northwest corner of Ontario Colony Lot No. 282; and

(3) On the West line of Ontario Colony Lot No. 301, 400 feet North of 19th Street.

Such measuring and recording devices shall be of such design and construction as may be agreed upon by and between San Antonio and Cucamonga, or, if they fail to agree,as may be designated by the Chief Engineer of the San Bernardino County Flood Control District, or by the above entitled Court.

All imported water which is to be spread upon Cucamonga Basin, whether spread by San Antonio to earn its entitlement under paragraph Second hereof, or is spread after the purchase thereof by the parties hereto other than San Antonio,shall be conducted through said recording and measuring devices by San Antonio,unless otherwise agreed in writing by the stipulating parties, including San Antonio,having allocated water equal to at least five-sixths (5/6ths) of the aggregate stipulated water, and no water not so conducted through such devices and measured shall be counted as water spread under the terms of such paragraph Second, unless so agreed in writing by such parties.

Said devices shall be designed and operated so that they continuously record the amount of water passing therethrough between the start and finish of each spreading season. In case of failure of measuring devices, average of the preceding and succeeding measurements shall be used. Such records shall be open to the inspection of all other stipulating parties on reasonable notice.

Each stipulating party shall have the right to inspect such recording and measuring devices at any time,and,in the event that the same shall ever be locked,each of the stipulating parties shall be furnished by San Antonio with a key thereto so as to permit inspection thereof. Further, San Antonio shall grant to the other stipulating parties hereto, insofar as it can do so without being

SURR & HELLYER
ATTORNEYS AT LAW
SAN BERNARDINO, CALIFORNIA

required to obtain the same from others, a non-exclusive right of ingress and egress from the nearest public street to said recording measuring devices. The stipulating parties hereto shall pro-rate the expense of the original installation of said recording measuring devices, and San Antonio shall thereafter operate and maintain and bear the expense of operating and maintaining such devices.

SIXTH: As between the stipulating parties only, no extraction of water from Cucamonga Basin by any party in excess of the amount herein provided to be taken by such party, shall be deemed adverse to any other stipulating party, and each stipulating party hereby waives as against each other stipulating party the right to plead any statute of limitations or laches with respect to any extraction of water by such party in excess of such amount.

SEVENTH: Except as provided in paragraph Second, if any stipulating party in any year shall fail to take or receive from the basin or transport beyond the confines of the basin, the full quantity of water which such party is entitled hereunder to take or receive or transport beyond said confines, as the case may be, such failure shall not entitle such party to take or receive or so transport from the basin in any succeeding year any greater quantity of water than if in each prior year such party had taken, received and so transported from the basin all water which such party was entitled hereunder to so take, receive and transport, and, subject to the provisions of Paragraph Fifteen, such failure shall not affect the rights of other parties to the decree to take the stipulated amounts of water they are entitled to receive by Exhibit 2 herein.

Likewise, except as provided in said paragraph Second, as between the stipulating parties, no right adjudged hereunder of any party to thereafter take water from the Basin or to thereafter transport such water beyond the confines of the Basin shall be lost, impaired or diminished by any failure to take or so transport from the Basin all or any of the water to which such party is entitled hereunder unless and only to the entent that for a period of at least fifteen

BURR & HILLYER
ATTORNEYS AT LAW
SAN BERNARDINO, CALIFORNIA

consecutive years such right shall not be exercised.

EIGHTH: Each stipulating party shall always maintain records of all extractions of water from the Basin by such party such that it can be determined therefrom for each year what quantity of water was taken from each well, or combination of wells,or other water source within the Basin from which such party received water.

Upon written demand of any other stipulating party,the party keeping such records shall, within 30 days after receipt of such demand, supply to the party making such demand or to the person designated by such party in such demand a written statement of the amount of water(in acre feet)so taken from each such well or combination of wells, or other source,for each year after 1957, with respect to which no such statement has previously been supplied.

Within six months hereafter as to existing wells, or upon commencement of operation as to wells first hereafter operated,each such well or combination of wells shall be so equipped with measuring devices at the expense of stipulating party who operates the same,as to show the quantity of water used or extracted.

Likewise, if any stipulating party hereafter transports water beyond the confines of the Basin,such transporting party shall thereafter maintain such measuring box,meter,weir, or other measuring device as will show readily and accurately the quantity of water at the time being transported beyond the confines of the Basin.Measurements of the quantity of water being taken at each of said points shall be made by such transporting party at least daily by weir or weekly by meter throughout the entire period water is being taken at such point. A record of such measurements and hours of operation shall always be made and maintained by such party.In case of failure of measuring device, average of the preceding and succeeding measurements shall be used.

Each stipulating party and any agent of any such party shall at all reasonable hours be entitled to inspect all such meters, boxes,

SURR & HELLYER
ATTORNEYS AT LAW
SAN BERNARDINO, CALIFORNIA

weirs and other measuring devices, and to inspect, check, and copy any record of extractions and measurements and of all data and computations pertaining to the same in the possession or under the control of any other stipulating party or parties.

NINTH: Every provision of this Judgment in favor of or applying to any party hereto shall also apply to and inure to the benefit of, and also bind each and all of the heirs, legal representatives, successors and assigns of such party.

TENTH: The maximum quantity of water which any stipulating party shall be entitled to take from the Basin or transport beyond its confines shall not be increased or affected by the future acquisition by such party of additional lands, unless there shall be appurtenant to such lands rights to take water, which rights are in this action adjudged to exist.

Nothing in this judgment contained shall prevent any stipulating party from selling or otherwise disposing, or from purchasing or otherwise acquiring, any rights to water or to transport the same which may be adjudged to belong to any party to this action; but any such rights so acquired or so disposed shall remain subject to any limitations or restrictions herein expressed. Any transfer of the rights of any party herein shall be in writing, and notice thereof shall be given to San Antonio Water Company and Cucamonga Basin Protective Association, a corporation, whose address is Cucamonga, California, before the transferee may exercise such transferred rights.

ELEVENTH: The stipulating parties shall pro-rate the expense incurred after the date of this Judgment in prosecuting this action to Judgment against any other parties to this action.

The stipulating parties will unite in opposing any new, wrongful or unlawful taking of water from the Basin hereafter made by any person or corporation other than a stipulating party or parties, and will prorate the expense of making such opposition, including any litigation or engineering expense, provided that:

SURR & HELLYER
ATTORNEYS AT LAW
SAN BERNARDINO, CALIFORNIA

(a) The term "new taking" shall not include any water development in the Basin hereafter made for the sole purpose of maintaining but not increasing any quantity of water now being taken from the Basin by the person who may hereafter make such development.

(b) If any stipulating party does not join in prosecuting any future suit to prevent, enjoin or limit any such new, wrongful or unlawful taking, such stipulating party not so joining shall bear pro-rata the expense of such suit (including attorney's fees and engineering expense) only if final judgment is rendered in such suit preventing, enjoining or limiting such taking.

TWELFTH: Each stipulating party, and the agents and employees of each such party, is and are hereby perpetually enjoined and restrained from doing any act or thing in violation of any provision of this judgment, other than paragraph Eleventh hereof.

THIRTEENTH: No stipulating party shall be entitled to recover court costs from any other stipulating party.

FOURTEENTH: The above entitled action shall continue and may be prosecuted and tried against all defendants therein, other than the stipulating parties; and the stipulating parties shall share the expense of such prosecution pro-rata. The Court will retain jurisdiction to enter modifications of this decree pursuant to stipulations provided for hereunder.

FIFTEENTH: In the event that through inadequacy of the supply of water in the Cucamonga Basin, or by reason of adjudication in any subsequent action, the stipulating parties in the aggregate shall be unable to pump and extract from the Cucamonga Basin a quantity of water so great as the aggregate stipulated water as is set forth in Exhibit 2, the stipulating parties shall pro-rate the aggregate quantity of water available in the Basin as long as such inability shall continue.

In the event between October 1st of any year and June 15th of the succeeding calendar year, five-sixths of the water users

SUTER & HELLYER
ATTORNEYS AT LAW
SAN BERNARDINO, CALIFORNIA

shall agree in writing by a stipulation filed in said action that the supply of water in the Basin is inadequate to safely permit the stipulating parties to pump in such ensuing year the aggregate stipulated water and that the amount of water to be pumped by each stipulating party shall for such succeeding calendar year be limited to a specified percentage (uniform for all)of the allocated water, then for such succeeding calendar year, each stipulating party is hereby enjoined and restrained from pumping or extracting from the Basin more than such percentage of allocated water of such party (subject to the provisions of paragraphs Second and Third hereof).

SIXTEENTH: The listing upon Exhibit 2 of any number of acre feet for any party to this action other than a stipulating party, shall not be deemed an admission by any stipulating party that a non-stipulating party is entitled to any water whatsoever from Cucamonga Basin, nor as to the quantity which such non-stipulating party may take from said Basin, if any, but each such figure for any non-stipulating party is listed as a matter of convenience and as a possible basis of compromise only.

SEVENTEENTH: This judgment supersedes and controls all previous agreements and decrees between the stipulating parties,or any of them but only insofar as they are inconsistent herewith.

Done in open Court this 25 day of April, 1958.

CARL B. HILLIARD

Judge

SURR & KELLYER
ATTORNEYS AT LAW
SAN BERNARDINO, CALIFORNIA

EXHIBIT 1

TERRITORY UNDER WHICH LIES THE "CUCAMONGA BASIN"

That certain territory in the County of San Bernardino, State of California, which is situated to the South of the Sierra Madre range of mountains and is bounded and described as follows, to wit:

> Beginning at the base of the hereinbefore mentioned Sierra Madre Mountains at a point situate 9000 feet due North of the Southwest corner of Lot 241, said lot being delineated on Map of Ontario Colony Lands, recorded in the Office of the County Recorder of said County in Book 11 of Maps, at page 6 thereof; thence running South to said Southwest corner of said Lot 241; thence running in a general Southeasterly direction to the Southeast corner of Lot 419, said lot being also delineated on said Map of said Ontario Colony Lands; thence continuing in a general Southeasterly direction to a point situate thirteen hundred feet North of the South line and thirteen hundred feet East of the West line of Section 4, Township 1 South, Range 7 West, S. B. B. & M., thence running in a general Easterly direction to a point situate on the East line of said Section 4, eighteen hundred feet North of the Southeast corner of said Section 4; thence running in a general Northeasterly direction to the Southeast corner of the Southwest quarter of the Northeast quarter of Section 3, Township 1 South, Range 7 West, S. B. B. & M., thence running Northeasterly to a point situate on the North line of Section 2, Township 1 South, Range 7 West, S. B. B. & M., fourteen hundred feet East of the West line of said Section 2; thence running in a general Northeasterly direction to the base of said mountains, to a point where the division line between ranges six and seven, S. B. B. & M. intersects the South base of said mountains; thence following the meandering line of the South base of said mountains, being curved northerly for canyons and southerly for ridges, in a westerly direction to the place of beginning.

SURR & HELLYER
ATTORNEYS AT LAW
SAN BERNARDINO, CALIFORNIA

EXHIBIT 2

STIPULATED WATER

NAME		ACRE FEET PER YEAR
San Antonio Water Company	6500	6500
Alta Loma Mutual Water Company	571	600
Armstrong Nurseries		200
Banyan Heights Water Company		625
Carnelian Water Company		600
Citrus Water Company		450
Cucamonga Water Company	[illegible]	6500
Cucamonga Development Company (included under Ioamosa)		None
Foothill Irrigation Company	483	1600
Hedges Well Company		732
Hellman Water Company (included under Ioamosa)		None
Hermosa Water Company	343	600
Ioamosa Water Company		920
Joya Mutual Water Company		390
Old Settlers Water Company	400	400
Rex Mutual Water Company		600
Charles Snyder		114
Sunset Water Company	400	400
Upland Water Company	750	750
Heirs and Devisees of Giovanni Vai, deceased		500
Hugh P. Crawford		120
Western Fruit Growers		120
Sapphire Mutual Water Company		None
G. N. Hamilton Ranch, a partnership		None
AGGREGATE STIPULATED WATER		22,721

EXHIBIT 2

114

15,391

SUHR & HELLYER
ATTORNEYS AT LAW
SAN BERNARDINO, CALIFORNIA

WALKER, WRIGHT, TYLER & WARD
210 W. 7th Street, Suite 631
Los Angeles, 14, California,
TRinity 8936

Attorneys for Plaintiff

IN THE SUPERIOR COURT OF THE STATE OF CALIFORNIA

IN AND FOR THE COUNTY OF SAN BERNARDINO

SAN ANTONIO WATER COMPANY, a corporation,

Plaintiff,

vs.

FOOTHILL IRRIGATION COMPANY, a corporation; SUNSET WATER COMPANY, a corporation; IOAMOSA WATER COMPANY, a corporation; and OLD SETTLERS WATER COMPANY, a corporation; ALTA LOMA MUTUAL WATER COMPANY, a corporation; ARMSTRONG NURSERIES, a corporation; BANYAN HEIGHTS WATER COMPANY, a corporation; CARNELIAN WATER COMPANY, a corporation; CITRUS WATER COMPANY, a corporation; CUCAMONGA DEVELOPMENT COMPANY, a corporation; CUCAMONGA WATER COMPANY, a corporation; HEDGES WELL COMPANY, a corporation; HELLMAN WATER COMPANY, a corporation; HERMOSA WATER COMPANY, a corporation; JOYA MUTUAL WATER COMPANY, a corporation; REX MUTUAL WATER COMPANY, a corporation; SAPPHIRE MUTUAL WATER COMPANY, a corporation; CHARLES SNYDER; UPLAND WATER COMPANY, a corporation; HENRY G. BODKIN and BANK OF AMERICA NATIONAL TRUST AND SAVINGS ASSOCIATION, as Executors of the last will of Giovanni Vai, deceased; WESTERN FRUIT GROWERS, a corporation; HUGH P. CRAWFORD; G. N. HAMILTON RANCH, a partnership composed of Arthur Bridge, Helen Bridge, and Grace W. Burt; JOHN DOE ONE to THIRTY, inclusive, MARY ROE ONE to THIRTY inclusive, JOHN DOE COMPANY ONE TO TWENTY inclusive,

Defendants.

No.

STIPULATION REGARDING TRIAL AND JUDGMENT

IT IS HEREBY STIPULATED AND AGREED by and between plaintiff San Antonio Water Company and the undersigned defendants (said plaintiff and defendants being herein called "Stipulating parties")

that:

FIRST: Each of the undersigned defendants hereby appears in the above entitled action. The allegations of the complaint on file in said action shall be deemed denied by the undersigned defendants, and they shall be and are deemed to have alleged in said action that they own such rights to the waters of Cucamonga Creek and of Cucamonga Basin (mentioned in said judgment) as may be supported by any evidence which may be introduced at the trial of said action.

SECOND: At any time after the filing of this stipulation said action may be tried as between the stipulating parties. Said trial may be held without notice if the undersigned counsel for the stipulating parties are present or represented at said trial, and in such case notice of said trial is hereby waived.

THIRD: The stipulating parties consent that a Decree in the form which precedes and is attached to this stipulation may be rendered and entered by the Court in said action, in the event the Court finds such judgment proper under the evidence which shall have been introduced.

FOURTH: The stipulating parties hereby waive the signing or filing of any Findings of Fact in said action in the event a decree in said form is to be rendered.

Dated: ~~November~~ April 25th, 1958.

SAN ANTONIO WATER COMPANY

BY F. C. Buffington President

AND C. A. Adams Secretary

WALKER, WRIGHT, TYLER and WARD

BY [signature]
Attorneys for Plaintiff

FOOTHILL IRRIGATION COMPANY

BY Norman Hixson V. President

AND Frank U. Van Slyt Secretary

SURR & HELLYER
ATTORNEYS AT LAW
SAN BERNARDINO, CALIFORNIA

IOAMOSA WATER COMPANY

BY _____ President

AND _____ Secretary

OLD SETTLERS WATER COMPANY

BY _____ President

AND _____ Secretary

SUNSET WATER COMPANY

BY _____ President

AND _____ Secretary

CUCAMONGA WATER COMPANY

BY _____ President

AND _____ Secretary

ALTA LOMA MUTUAL WATER COMPANY

BY _____ President

AND _____ Secretary

ARMSTRONG NURSERIES, Inc.

BY _____ President

AND _____ Secretary

BANYAN HEIGHTS WATER COMPANY

BY _____ President

AND _____ Secretary

CARNELIAN WATER COMPANY

BY _____ President

AND _____ Secretary

CITRUS WATER COMPANY

BY _____ President

AND _____ Secretary

LUCE & NELLYER
ATTORNEYS AT LAW
SAN BERNARDINO, CALIFORNIA

HEDGES WELL COMPANY,

BY _____ President

AND _____ Secretary

HELLMAN WATER COMPANY

BY _____ President

AND _____ Secretary

HERMOSA WATER COMPANY

BY _____ President

AND _____ Secretary

JOYA MUTUAL WATER COMPANY

BY _____ President

AND _____ Secretary

UPLAND WATER COMPANY

BY _____ President

AND _____ Secretary

WESTERN FRUIT GROWERS

BY _____ President

AND _____ Secretary

CUCAMONGA DEVELOPMENT COMPANY

BY _____ President

AND _____ Secretary

SAPPHIRE MUTUAL WATER COMPANY

BY _____ President

AND _____ Secretary

_____
(Charles Snyder)

_____
(Hugh P. Crawford)

GUNN & HELLYER
ATTORNEYS AT LAW
SAN BERNARDINO, CALIFORNIA

HENRY G. BODKIN and
BANK OF AMERICA NATIONAL TRUST AND
SAVINGS ASSOCIATION,
As Executors of the Last Will of
Giovanni Vai, deceased;

BY _____

AND _____ ASSISTANT TRUST OFFICER
(Henry G. Bodkin)

G. N. HAMILTON RANCH, a partnership,

BY _____
(Arthur Bridge)

BY _____
(Helen Bridge)

BY _____
(Grace W. Burt)

Partners

REX MUTUAL WATER COMPANY

BY _____ President

AND _____ Secretary

SURR & HELLYER

BY _____
Attorneys for Ioamosa, Cucamonga,
Banyan Heights, Joya Mutual, Rex Mutual,
and Sapphire Water Companies, and for
Hedges Well Company and Cucamonga
Development Company.

SURR & HELLYER
ATTORNEYS AT LAW
SAN BERNARDINO, CALIFORNIA

EXHIBITS

EXHIBIT A – LOCATION MAP OF CHINO BASIN

N

0 1 2 3 4 Kilometers

0 1 2 3 Miles

San Gabriel Mountains

HIGHLAND AVE

BASE LINE ST

FOOTHILL BLVD

RIVERSIDE AVE

MERRILL AVE

15

215

10

HOLT BLVD

Ontario Int'l Airport

MISSION BLVD

RESERVOIR ST

CENTRAL AVE

EUCLID AVE

Los Angeles County

San Bernardino County

60

PHILADELPHIA ST

RIVERSIDE DR

ARCHIBALD AVE

San Bernardino County

Riverside County

Jurupa Hills

EDISON AVE

PEDLEY RD

JURUPA RD

71

Puente Hills

Chino

LIMONITE AVE

Santa Ana River

Chino Hills

San Bernardino County

Orange County

La Sierra Hills

91

Exhibit A

Location Map of Chino Basin

Adjudicated Boundary of the Chino Basin

Map prepared by:

WE WILDERMUTH ENVIRONMENTAL, INC.

EXHIBIT B – HYDROLOGIC MAP OF CHINO BASIN

N

0 1 2 3 4 Kilometers

0 1 2 3 Miles

San Gabriel Mountains

San Antonio Dam

Claremont Basin

Cucamonga Basin

Indian Hill Fault

Red Hill Fault

Pomona Basin

San Jose Fault

Chino

Spadra Basin

Ontario Int'l Airport

Basin

Rialto-Colton Basin

Riverside Basins

Rialto-Colton Fault

San Jacinto Fault

Barrier J

Lytle Creek

Cajon Creek

Deer Creek

Day Creek

East San Sevaine Creek

Etiwanda Creek

San Antonio Creek

FOOTHILL BLVD

RESERVOIR ST

CENTRAL AVE

EUCLID AVE

MISSION BLVD

EDISON AVE

JURUPA RD

LIMONITE AVE

ARCHIBALD AVE

Cucamonga Creek

Puente Hills

Chino

Central Avenue Fault

Chino Fault

Chino Creek

Chino Hills

Prado Flood Control Basin

Prado Dam

Temescal Basin

La Sierra Hills

Santa Ana River

10 15 60 71 91 215

Exhibit B

Hydrologic Map of Chino Basin

Fault

(Solid where known; dashed where approximate; dotted where concealed; queried where unknown; big dots where barrier to groundwater flow)

Groundwater Divide

CHINO BASIN WATERMASTER

Map prepared by:

WE WILDERMUTH ENVIRONMENTAL, INC.

EXHIBIT C – STIPULATING OVERLAYING AGRICULTURAL PRODUCERS

EXHIBIT "C"

STIPULATING OVERLYING AGRICULTURAL PRODUCERS

STATE OF CALIFORNIA

COUNTY OF SAN BERNARDINO

Abacherli, Dairy, Inc.

Abacherli, Frank

Abacherli, Shirley

Abbona, Anna

Abbona, James

Abbona, Jim

Abbona, Mary

Agliani, Amelia H.

Agman, Inc.

Aguerre, Louis B.

Ahmanson Trust Co.

Akiyama, Shizuye

Akiyama, Tomoo

Akkerman, Dave

Albers, J.N.

Albers, Nellie

Alewyn, Jake J.

Alewyn, Normalee

Alger, Mary D.

Alger, Raymond

Allen, Ben F.

Allen, Jane F.

Alta-Dena Dairy

Anderson Farms

Anguiano, Sarah L.S.

Anker, Gus

Barnhill, Paul

Aphessetche, Xavier

Arena Mutual Water Assn.

Armstrong Nurseries, Inc.

Arretche, Frank

Arretche, Jean Pierre

Arvidson, Clarence F.

Arvidson, Florence

Ashley, George W.

Ashley, Pearl E.

Atlas Farms

Atlas Ornamental Iron Works, Inc.

Aukeman, Carol

Aukeman, Lewis

Ayers, Kenneth C., aka

Kelley Ayers

Bachoc, Raymond

Baldwin, Edgar A.

Baldwin, Lester

Banbury, Carolyn

Bangma Dairy

Bangma, Arthur

Bangma, Ida

Bangma, Martin

Bangma, Sam

Barba, Anthony B.

Barba, Frank

Barcellos, Joseph

Barnhill, Maurine W.

Boersma, Angie

EXHIBIT "C"

STIPULATING OVERLYING AGRICULTURAL PRODUCERS

Bartel, Dale
Bartel, Ursula
Bartel, Willard
Barthelemy, Henry
Barthelemy, Roland
Bassler, Donald V., M.D.
Bates, Lowell R.
Bates, Mildred L.
Beahm, James W.
Beahm, Joan M.
Bekendam, Hank
Bekendam, Pete
Bello, Eugene
Bello, Olga
Beltman, Evelyn
Beltman, Tony
Bergquist Properties, Inc.
Bevacqua, Joel A.
Bevacqua, Marie B.
Bidart, Bernard
Bidart, Michael J.
Binnell, Wesley
Black, Patricia E.
Black, Victor
Bodger, John & Sons Co.
Boer, Adrian
Boersma and Wind Dairy
Borges, Bernadette
Boersma, Berdina
Boersma, Frank
Boersma, Harry
Boersma, Paul
Boersma, Sam
Boersma, William L.
Bohlander & Holmes, Inc.
Bokma, Peter
Bollema, Jacob
Boonstoo, Edward
Bootsma, Jim
Borba, Dolene
Borba, Dolores
Borba, Emily
Borba, George
Borba, John
Borba, John & Sons
Borba, John Jr.
Borba, Joseph A.
Borba, Karen E.
Borba, Karen M.
Borba, Pete, Estate of
Borba, Ricci
Borba, Steve
Borba, Tom
Bordisso, Alleck
Borges, Angelica M.
Bothof, Roger W.

EXHIBIT "C"

STIPULATING OVERLYING AGRICULTURAL PRODUCERS

Borges, John O.
Borges, Linda L.
Borges, Manual Jr.
Borges, Tony
Bos, Aleid
Bos, Gerrit
Bos, John
Bos, John
Bos, Margaret
Bos, Mary
Bos, Mary Beth
Bos, Tony
Bosch, Henrietta
Bosch, Peter T.
Boschma, Betty
Boschma, Frank
Boschma, Greta
Boschma, Henry
Bosma, Dick
Bosma, Florence G.
Bosma, Gerrit
Bosma, Jacob J.
Bosma, Jeanette Thea
Bosman, Frank
Bosman, Nellie
Bosnyak, Goldie M.
Bosnyak, Martin

Bouma, Cornie
Bouma, Emma
Bouma, Henry P.
Bouma, Martin
Bouma, Peter G. & Sons Dairy
Bouma, Ted
Bouman, Helen
Bouman, Sam
Bower, Mabel E.
Boys Republic
Breedyk, Arie
Breedyk, Jessie
Briano Brothers
Briano, Albert
Briano, Albert Trustee for
Briano, Albert Frank
Briano, Lena
Brink, Russell N.
Brinkerhoff, Margaret
Brinkerhoff, Robert L.
Britschgi, Florence
Britschgi, Magdalena Garetto
Britschgi, Walter P.
Brommer, Marvin
Brookside Enterprizes, dba
Brookside Vineyard Co.
Brothers Three Dairy

Brown, Eugene

Chino Corona Investment

EXHIBIT "C"

STIPULATING OVERLYING AGRICULTURAL PRODUCERS

Brun, Martha M.

Brun, Peter Robert

Buma, Duke

Buma, Martha

Bunse, Nancy

Bunse, Ronnie L.

Caballero, Bonnie L.

Caballero, Richard F.

Cable Airport Inc.

Cadlini, Donald

Cadlini, Jesse R.

Cadlini, Marie Edna

Cambio, Anna

Cambio, Charles, Estate of

Cambio, William V.

Cardoza, Florence

Cardoza, Olivi

Cardoza, Tony

Carnesi, Tom

Carver, Robt M., Trustee

Cauffman, John R.

Chacon Bros.

Chancon, Elvera P.

Chacon, Joe M.

Chacon, Robert M.

Chacon, Virginia L.

Chez, Joseph C.

Chino Water Co.

Christensen, Leslie

Christensen, Richard G.

Christian, Ada R.

Christian, Harold F.

Christy, Ella J.

Christy, Ronald S.

Cihigoyenetche, Jean

Cihigoyenetche, Leona

Cihigoyenetche, Martin

Clarke, Arthur B.

Clarke, Nancy L.

Clarke, Phyllis J.

Coelho, Isabel

Coelho, Joe A. Jr.

Collins, Howard E.

Collins, Judith F.

Collinsworth, Ester L.

Collinsworth, John E.

Collinsworth, Shelby

Cone Estate (05-2-00648/649)

Consolidated Freightways Corp.
of Delaware

Corona Farms Co.

Corra, Rose

Costa, Dimas S.

Costa, Laura

Costa, Myrtle

De Boer, L.H.

EXHIBIT "C"

STIPULATING OVERLYING AGRICULTURAL PRODUCERS

Costamagna, Antonio	De Boer, Sidney
Costamagna, Joseph	De Bos, Andrew
Cousyn, Claus B.	De Graaf, Anna Mae
Cramer, Carole F.	De Graaf, Gerrit
Cramer, William R.	De Groot, Dick
Crossroads Auto Dismantlers, Inc.	De Groot, Dorothy
Crouse, Beatrice I.	De Groot, Ernest
Crouse, Roger	De Groot, Henrietta
Crowley, Juanita C.	De Groot, Jake
Crowley, Ralph	De Groot, Pete Jr.
Cucamonga Vintners	De Haan, Bernadena
D'Astici, Teresa	De Haan, Henry
Da Costa, Cecilia B.	De Hoog, Adriana
Da Costa, Joaquim F.	De Hoog, Joe
Daloisio, Norman	De Hoog, Martin
De Berard Bros.	De Hoog, Martin L.
De Berard, Arthur, Trustee	De Hoog, Mitch
De Berard, Charles	De Hoog, Tryntje
De Berard, Chas., Trustee	De Jager, Cobi
De Berard, Helan J.	De Jager, Edward D.
De Berard, Robert	De Jong Brothers Dairy
De Berard, Robert Trustee	De Jong, Cornelis
De Bie, Adrian	De Jong, Cornelius
De Bie, Henry	De Jong, Grace
De Bie, Margaret M.	De Jong, Jake
De Bie, Marvin	De Jong, Lena
De Boer, Fred	De Leeuw, Alice
De Leeuw, Sam	Dirkse, Catherine

EXHIBIT "C"

STIPULATING OVERLYING AGRICULTURAL PRODUCERS

De Soete, Agnes
De Soete, Andre
De Vries, Abraham
De Vries, Case
De Vries, Dick
De Vries, Evelyn
De Vries, Henry, Estate of
De Vries, Hermina
De Vries, Jack H.
De Vries, Jane
De Vries, Janice
De Vries, John
De Vries, John J.
De Vries, Neil
De Vries, Ruth
De Vries, Theresa
De Wit, Gladys
De Wit, Peter S.
De Wyn, Evert
De Zoete, Hattie V.
Do Zoete, Leo A.
Decker, Hallie
Decker, Henry A.
Demmer, Ernest
Di Carlo, Marie
Di Carlo, Victor
Di Tommaso, Frank
Dirkse, Charles C.
Dixon, Charles E.
Dixon, Geraldine A.
Doesberg, Hendrica
Doesburg, Theodorus, P.
Dolan, Marion
Dolan, Michael H.
Dominguez, Helen
Dominguez, Manual
Donkers, Henry A.
Donkers, Nellie G.
Dotta Bros.
Douma Brothers Dairy
Douma, Betty A.
Douma, Fred A.
Douma, Hendrika
Douma, Herman G.
Douma, Narleen J.
Douma, Phillip M.
Dow Chemical Co.
Dragt, Rheta
Dragt, William
Driftwood Dairy Farm
Droogh, Case
Duhalde, Marian
Duhalde, Lauren
Duits, Henrietta
Duits, John
Excelsior Farms
F.D.I.C.

EXHIBIT "C"

STIPULATING OVERLYING AGRICULTURAL PRODUCERS

Dunlap, Edna Kraemer, Estate of
Durrington, Glen
Durrington, William F.
Dusi, John Sr.
Dykstra, Dick
Dykstra, John
Dykstra, John & Sons
Dykstra, Wilma
Dyt, Cor
Dyt, Johanna
E and S Grape Growers
Eaton, Thomas, Estate of
Echeverria, Juan
Echeverria, Carlos
Echeverria, Pablo
Eilers, E. Myrle
Eilers, Henry W.
El Prado Golf Course
Ellsworth, Rex C.
Engelsma, Jake
Engelsma, Susan
Escojeda, Henry
Etiwanda Grape Products Co.
Euclid Ave. Investment One
Euclid Ave. Investment Four
Euclid Ave. Three Investment

Fagundes, Frank M.
Fagundes, Mary
Fernandes, Joseph Jr.
Fernandes, Velma C.
Ferraro, Ann
Ferreira, Frank J.
Ferreira, Joe C. Jr.
Ferreira, Narcie
Fillippi, J. Vintage Co.
Filippi, Joseph
Filippi, Joseph A.
Filippi, Mary E.
Fitzgerald, John R.
Flameling Dairy Inc.
Flamingo Dairy
Foss, Douglas E.
Foss, Gerald R.
Foss, Russel
Fred & John Troost No. 1 Inc.
Fred & Maynard Troost No. 2 Inc.
Freitas, Beatriz
Freitas, Tony T.
Gakle, Louis L.
Galleano Winery, Inc.
Galleano, Bernard D.
Galleano, D.
Galleano, Mary M.

Garcia, Pete
Hansen, Raymond F.

EXHIBIT "C"

STIPULATING OVERLYING AGRICULTURAL PRODUCERS

Gardner, Leland V.
Gardner, Lola M.
Garrett, Leonard E.
Garrett, Patricia T.
Gastelluberry, Catherine
Gastelluberry, Jean
Gilstrap, Glen E.
Gilstrap, Marjorie J.
Godinho, John
Godinho, June
Gonsalves, Evelyn
Gonsalves, John
Gorzeman, Geraldine
Gorzeman, Henry A.
Gorzeman, Joe
Govea, Julia
Goyenetche, Albert
Grace, Caroline E.
Grace, David J.
Gravatt, Glenn W.
Gravatt, Sally Mae
Greydanus Dairy, Inc.
Greydanus, Rena
Griffin Development Co.
Haagsma, Dave
Haagsma, John
Hansen, Mary D.
Hanson, Ardeth W.
Harada, James T.
Harada, Violet A.
Haringa, Earl and Sons
Haringa, Herman
Haringa, Rudy
Haringa, William
Harper, Cecilia de Mille
Harrington, Winona
Harrison, Jacqueline A.
Hatanaka, Kenichi
Heida, Annie
Heida, Don
Heida, Jim
Heida, Sam
Helms, Addison D.
Helms, Irma A.
Hermans, Alma I.
Hermans, Harry
Hettinga, Arthur
Hettinga, Ida
Hettinga, Judy
Hettinga, Mary
Hettinga, Wilbur
Heublein, Inc., Grocery Products Group
Hibma, Catherine M.
Hibma, Sidney
Hohberg, Harold C.

EXHIBIT "C"

STIPULATING OVERLYING AGRICULTURAL PRODUCERS

Hicks, Kenneth I.
Hicks, Minnie M.
Higgins Brick Co.
Highstreet, Alfred V.
Highstreet, Evada V.
Hilarides, Bertha as Trustee
Hilarides, Frank
Hilarides, John as Trustee
Hindelang, Tillie
Hindelang, William
Hobbs, Bonnie C.
Hobbs, Charles W.
Hobbs, Hazel I.
Hobbs, Orlo M.
Hoekstra, Edward
Hoekstra, George
Hoekstra, Grace
Hoekstra, Louie
Hofer, Paul B.
Hofer, Phillip F.
Hofstra, Marie
Hogeboom, Jo Ann M.
Hogeboom, Maurice D.
Hogg, David V.
Hogg, Gene P.
Hogg, Warren G.
Hohberg, Edith J.
Hohberg, Harold W.
Holder, Arthur B.
Holder, Dorothy F.
Holmes, A. Lee
Holmes, Frances P.
Hoogeboom, Gertrude
Hoogeboom, Pete
Hoogendam, John
Hoogendam, Tena
Houssels, J. K. Thoroughbred Farm
Hunt Industries
Idsinga, Ann
Idsinga, William W.
Imbach Ranch, Inc.
Imbach, Kenneth E.
Imbach, Leonard K.
Imbach, Oscar K.
Imbach, Ruth M.
Indaburu, Jean
Indaburu, Marceline
Iseli, Kurt H.
Ito, Kow
J & B Dairy Inc.
Jaques, Johnny C. Jr.
Jaques, Mary
Jaques, Mary Lou
Jay Em Bee Farms
Knevelbaard, John

EXHIBIT "C"

STIPULATING OVERLYING AGRICULTURAL PRODUCERS

Johnson Bro's Egg Ranches, Inc.	Knudsen, Ejnar
Johnston, Ellwood W.	Knudsen, Karen M.
Johnston, George F. Co.	Knudsen, Kenneth
Johnston, Judith H.	Knudson, Robert
Jones, Leonard P.	Knudson, Darlene
Jongsma & Sons Dairy	Koel, Helen S.
Jongsma, Diana A.	Koetsier, Gerard
Jongsma, Dorothy	Koetsier, Gerrit J.
Jongsma, George	Koetsier, Jake
Jongsma, Harold	Koning, Fred W.
Jongsma, Henry	Koning, Gloria
Jongsma, John	Koning, J. W. Estate
Jongsma, Nadine	Koning, James A.
Jongsma, Tillie	Koning, Jane
Jordan, Marjorie G.	Koning, Jane C.
Jordan, Troy O.	Koning, Jennie
Jorritsma, Dorothy	Koning, John
Juliano, Albert	Koning, Victor A.
Kamper, Cornelis	Kooi Holstein Corporation
Kamstra, Wilbert	Koolhaas, Kenneth E.
Kaplan, Lawrence J.	Koolhaas, Simon
Kasbergen, Martha	Koolhaas, Sophie Grace
Kasbergen, Neil	Koopal, Grace
Kazian, Angelen Estate of	Koopal, Silas
Kingsway, Const. Corp.	Koopman, Eka
Klapps Market	Koopman, Gene T.
Kline, James K.	Koopman, Henry G.
Koopman, Ted	Leck, Arthur A.

EXHIBIT "C"

STIPULATING OVERLYING AGRICULTURAL PRODUCERS

Koopman, Tena

Koot, Nick

Koster, Aart

Koster, Frances

Koster, Henry B.

Koster, Nellie

Kroes, Jake R.

Kroeze, Bros

Kroeze, Calvin E.

Kroeze, John

Kroeze, Wesley

Kruckenberg, Naomi

Kruckenberg, Perry

L. D. S. Welfare Ranch

Labrucherie, Mary Jane

Labrucherie, Raymond F.

Lako, Samuel

Landman Corp.

Lanting, Broer

Lanting, Myer

Lass, Jack

Lass, Sandra L.

Lawrence, Cecelia, Estate of

Lawrence, Joe H., Estate of

Leal, Bradley W.

Leal, John C.

Leal, John Craig

Leck, Evelyn M.

Lee, Harold E.

Lee, Helen J.

Lee, Henrietta C.

Lee, R. T. Construction Co.

Lekkerkerk, Adriana

Lekkerkerk, L. M.

Lekkerkerker, Nellie

Lekkerkerker, Walt

Lewis Homes of California

Livingston, Dorothy M.

Livingston, Rex E.

Lokey, Rosemary Kraemer

Lopes, Candida A.

Lopes, Antonio S.

Lopez, Joe D.

Lourenco, Carlos, Jr.

Lourenco, Carmelina P.

Lourenco, Jack C.

Lourenco, Manual H.

Lourenco, Mary

Lourenco, Mary

Luiten, Jack

Luiz, John M.

Luna, Christine I.

Luna, Ruben T.

Lusk, John D. and Sons A California Corporation

Lyon, Gregory E.

Mickel, Louise

EXHIBIT "C"

STIPULATING OVERLYING AGRICULTURAL PRODUCERS

Lyon, Paula E.

M & W Co. #2

Madole, Betty M.

Madole, Larry B.

Marquez, Arthur

Marquine, Jean

Martin, Lelon O.

Martin, Leon O.

Martin, Maria D.

Martin, Tony J.

Martins, Frank

Mathias, Antonio

Mc Cune, Robert M.

Mc Masters, Gertrude

Mc Neill, J. A.

Mc Neill, May F.

Mees, Leon

Mello and Silva Dairy

Mello and Sousa Dairy

Mello, Emilia

Mello, Enos C.

Mello, Mercedes

Mendiondo, Catherine

Mendiondo, Dominique

Meth. Hosp. – Sacramento

Metzger, R. S.

Metzger, Winifred

Miersma, Dorothy

Meirsma, Harry C.

Minaberry, Arnaud

Minaberry, Marie

Mistretta, Frank J.

Mocho and Plaa Inc.

Mocho, Jean

Mocho, Noeline

Modica, Josephine

Montes, Elizabeth

Montes, Joe

Moons, Beatrice

Moons, Jack

Moramarco, John A. Enterprise

Moreno, Louis W.

Moss, John R.

Motion Pictures Associates, Inc.

Moynier, Joe

Murphy, Frances V.

Murphy, Myrl L.

Murphy, Naomi

Nanne, Martin Estate of

Nederend, Betty

Nederend, Hans

Norfolk, James

Norfolk, Martha

Notrica, Louis

Nyberg, Lillian N.

Ormonde, Viva

EXHIBIT "C"

STIPULATING OVERLYING AGRICULTURAL PRODUCERS

Nyenhuis, Annie

Nyenhuis, Jim

Occidental Land Research

Okumura, Marion

Okumura, Yuiche

Oldengarm, Effie

Oldengarm, Egbert

Oldengarm, Henry

Oliviera, Manuel L.

Oliviera, Mary M.

Olson, Albert

Oltmans Construction Co.

Omlin, Anton

Omlin, Elsie L.

Ontario Christian School Assn.

Oord, John

Oostdam, Jacoba

Oostdam, Pete

Oosten, Agnes

Oosten, Anthonia

Oosten, Caroline

Oosten, John

Oosten, Marinus

Oosten, Ralph

Orange County Water District

Ormonde, Manuel

Ormonde, Pete, Jr.

Ortega, Adeline B.

Ortega, Bernard Dino

Osterkamp, Joseph S.

Osterkamp, Margaret A.

P I E Water Co.

Palmer, Eva E.

Palmer, Walter E.

Parente, Luis S.

Parente, Mary Borba

Parks, Jack B.

Parks, Laura M.

Patterson, Lawrence E. Estate of

Payne, Clyde H.

Payne, Margo

Pearson, Athelia K.

Pearson, William C.

Pearson, William G.

Pene, Robert

Perian, Miller

Perian, Ona E.

Petrissans, Deanna

Petrissans, George

Petrissans, Jean P.

Petrissans, Marie T.

Pickering, Dora M.

(Mrs. A. L. Pickering)

Pierce, John

Pierce, Sadie

Righetti, A. T.

EXHIBIT "C"

STIPULATING OVERLYING AGRICULTURAL PRODUCERS

Pietszak, Sally

Pine, Joe

Pine, Virginia

Pires, Frank

Pires, Marie

Plaa, Jeanne

Plaa, Michel

Plantenga, Agnes

Plantenga, George

Poe, Arlo D.

Pomona Cemetery Assn.

Porte, Cecelia, Estate of

Porte, Garritt, Estate of

Portsmouth, Vera McCarty

Ramella, Mary M.

Ramirez, Concha

Rearick, Hildegard H.

Rearick, Richard R.

Reinalda, Clarence

Reitsma, Greta

Reitsma, Louis

Rice, Bernice

Rice, Charlie E.

Richards, Karin

(Mrs. Ronnie Richards)

Richards, Ronald L.

Ridder, Jennie Wassenaar

Riley, George A.

Riley, Helen C.

Robbins, Jack K.

Rocha, John M.

Rocha, Jose C.

Rodrigues, John

Rodrigues, Manuel

Rodrigues, Manuel, Jr.

Rogrigues, Mary L.

Rodriquez, Daniel

Rogers, Jack D.

Rohrer, John A.

Rohrer, Theresa D.

Rohrs, Elizabeth H.

Rossetti, M. S.

Roukema, Angeline

Roukema, Ed.

Roukema, Nancy

Roukema, Siebren

Ruderian, Max J.

Russell, Fred J.

Rusticus, Ann

Rusticus, Charles

Rynsburger, Arie

Rynsburger, Berdena, Trust

Rynsburger, Joan Adele

Rynsburger, Thomas

S. P. Annex, Inc.

Scott, Frances M.

EXHIBIT "C"

STIPULATING OVERLYING AGRICULTURAL PRODUCERS

Salisbury, Elinor J.
Sanchez, Edmundo
Sanchez, Margarita O.
Santana, Joe Sr.
Santana, Palmira
Satragni, John B. Jr.
Scaramella, George P.
Schaafsma Bros.
Schaafsma, Jennie
Schaafsma, Peter
Schaafsma, Tom
Schaap, Andy
Schaap, Ids
Schaap, Maria
Schacht, Sharon C.
Schakel, Audrey
Schakel, Fred
Schmid, Olga
Schmidt, Madeleine
Schoneveld, Evert
Schoneveld, Henrietta
Schoneveld, John
Schoneveld, John Allen
Schug, Donald E.
Schug, Shirley A.
Schuh, Bernatta M.
Schuh, Harold H.
Scott, Linda F.
Scott, Stanley A.
Scritsmier, Lester J.
Serl, Charles A.
Serl, Rosalie P.
Shady Grove Dairy, Inc.
Shamel, Burt A.
Shelby, Harold E.
Shelby, John A.
Shelby, Velma M.
Shelton, Alice A.
Sherwood, Robert W.
Sherwood, Sheila J.
Shue, Eva
Shue, Gilbert
Sieperda, Anne
Sieperda, James
Sigrist, Hans
Sigrist, Rita
Silveira, Arline L.
Silveira, Frank
Silveira, Jack
Silveira, Jack P. Jr.
Simas, Dolores
Simas, Joe
Singleton, Dean
Singleton, Elsie R.

Sinnott, Jim
Staal, John

EXHIBIT "C"

STIPULATING OVERLYING AGRICULTURAL PRODUCERS

Sinnott, Mildred B.
Slegers, Dorothy
Slegers, Hubert J.
Slegers, Jake
Slegers, Jim
Slegers, Lenwood M.
Slegers, Martha
Slegers, Tesse J.
Smith, Edward S.
Smith, Helen D.
Smith, James E.
Smith, Keith J.
Smith, Lester W.
Smith, Lois Maxine
Smith, Marjorie W.
Soares, Eva
Sogioka, Mitsuyoshi
Sogioka, Yoshimato
Sousa, Sam
Southern Pacific Land Co.
Southfield, Eddie
Souza, Frank M.
Souza, Mary T.
Spickerman, Alberta
Spickerman, Florence
Spickerman, Rudolph
Spyksma, John
Stahl, Zippora P.
Stampfl, Berta
Stampfl, William
Stanley, Robert E.
Stark, Everett
Stellingwerf, Andrew
Stellingwerf, Henry
Stellingwerf, Jenette
Stellingwerf, Shana
Stellingwerf, Stan
Stelzer, Mike C.
Sterk, Henry
Stiefel, Winifred
Stiefel, Jack D.
Stigall, Richard L.
Stigall, Vita
Stockman's Inn
Stouder, Charlotte A.
Stouder, William C.
Struikmans, Barbara
Struikmans, Gertie
Struikmans, Henry Jr.
Struikmans, Henry Sr.
Struikmans, Nellie
Swager, Edward
Swager, Gerben
Swager, Johanna
Swager, Marion
Terpstra, Theodore G.

EXHIBIT "C"

STIPULATING OVERLYING AGRICULTURAL PRODUCERS

Swierstra, Donald
Swierstra, Fanny
Sybrandy, Ida
Sybrandy, Simon
Sytsma, Albert
Sytsma, Edith
Sytsma, Jennie
Sytsma, Louie
Te Velde, Agnes
Te Velde, Bay
Te Velde, Bernard A.
Te Velde, Bonnie
Te Velde, Bonnie G.
Te Velde, George
Te Velde, George, Jr.
Te Velde, Harm
Te Velde, Harriet
Te Velde, Henry J.
Te Velde, Jay
Te Velde, Johanna
Te Velde, John H.
Te Velde, Ralph A.
Te Velde, Zwaantina, Trustee
Ter Maaten, Case
Ter Maaten, Cleone
Ter Maaten, Steve
Terpstra, Carol
Teune, Tony
Teunissen, Bernard
Teunissen, Jane
Thomas, Ethel M.
Thommen, Alice
Thommen, Fritz
Tillema, Allie
Tillema, Harold
Tillema, Klaas D.
Timmons, William R.
Tollerup, Barbara
Tollerup, Harold
Trapani, Louis A.
Trimlett, Arlene R.
Trimlett, George E.
Tristant, Pierre
Tuinhout, Ale
Tuinhout, Harry
Tuinhout, Hilda
Tuls, Elizabeth
Tuls, Jack S.
Tuls, Jake
Union Oil Company of California
United Dairyman's Co-op.
Urquhart, James G.
Usle, Cathryn
Usle, Faustino

V & Y Properties
Van Hofwegen, Clara

EXHIBIT "C"

STIPULATING OVERLYING AGRICULTURAL PRODUCERS

Vaile, Beryl M.
Valley Hay Co.
Van Beek Dairy Inc.
Van Canneyt Dairy
Van Canneyt, Maurice
Van Canneyt, Wilmer
Van Dam, Bas
Van Dam, Isabelle
Van Dam, Nellie
Van Den Berg, Gertrude
Van Den Berg, Joyce
Van Den Berg, Marinus
Van Den Berg, Marvin
Van Der Linden, Ardith
Van Der Linden, John
Van Der Linden, Stanley
Van Der Veen, Kenneth
Van Diest, Anna T.
Van Diest, Cornelius
Van Diest, Ernest
Van Diest, Rena
Van Dyk, Bart
Van Dyk, Jeanette
Van Foeken, Martha
Van Foeken, William
Van Hofwegen, Steve
Van Hofwegen, Adrian A.
Van Hofwegen, Jessie
Van Klaveren, A.
Van Klaveren, Arie
Van Klaveren, Wilhelmina
Van Klaveren, William
Van Leeuwen, Arie C.
Van Leeuwen, Arie C.
Van Leeuwen, Arlan
Van Leeuwen, Clara G.
Van Leeuwen, Cornelia L.
Van Leeuwen, Harriet
Van Leeuwen, Jack
Van Leeuwen, John
Van Leeuwen, Letie
Van Leeuwen, Margie
Van Leeuwen, Paul
Van Leeuwen, William A.
Van Ravenswaay, Donald
Van Ryn Dairy
Van Ryn, Dick
Van Surksum, Anthonetta
Van Surksum, John
Van Veen, John
Van Vliet, Effie
Van Vliet, Hendrika
Van Vliet, Hugo
Van Vliet, Klaas

Vande Witte, George
Vander Laan, Katie

EXHIBIT "C"

STIPULATING OVERLYING AGRICULTURAL PRODUCERS

Vanden Berge, Gertie

Vanden Berge, Gertie

Vanden Berge, Jack

Vanden Berge, Jake

Vanden Brink, Stanley

Vander Dussen, Agnes

Vander Dussen, Cor

Vander Dussen, Cornelius

Vander Dussen, Edward

Vander Dussen, Geraldine Marie

Vander Dussen, James

Vander Dussen, John

Vander Dussen, Nelvina

Vander Dussen, Rene

Vander Dussen, Sybrand Jr.

Vander Dussen, Sybrand Sr.

Vander Dussen Trustees

Vander Eyk, Case Jr.

Vander Eyk, Case Sr.

Vander Feer, Peter

Vander Feer, Rieka

Vander Laan, Ann

Vander Laan, Ben

Vander Laan, Bill

Vander Laan, Corrie

Vander Laan, Henry

Vander Laan, James

Vander Laan, Martin Jr.

Vander Laan, Tillie

Vander Leest, Anna

Vander Leest, Ann

Vander Meer, Alice

Vander Meer, Dick

Vander Poel, Hank

Vander Poel, Pete

Vander Pol, Irene

Vander Pol, Margie

Vander Pol, Marines

Vander Pol, William P.

Vander Schaaf, Earl

Vander Schaaf, Elizabeth

Vander Schaaf, Henrietta

Vander Schaaf, John

Vander Schaaf, Ted

Vander Stelt, Catherine

Vander Stelt, Clarence

Vander Tuig, Arlene

Vander Tuig, Sylvester

Vander Veen, Joe A.

Vandervlag, Robert

Vander Zwan, Peter

Vanderford, Betty W.

Vanderford, Claud R.

Vanderham, Adrian

Vanderham, Cornelius

Vestal, J. Howard

EXHIBIT "C"

STIPULATING OVERLYING AGRICULTURAL PRODUCERS

Vanderham, Cornelius P.
Vanderham, Cory
Vanderham, E. Jane
Vanderham, Marian
Vanderham, Martin
Vanderham, Pete C.
Vanderham, Wilma
Vasquez, Eleanor
Veenendaal, Evert
Veenendaal, John H.
Veiga, Dominick, Sr.
Verbree, Jack
Verbree, Tillie
Verger, Bert
Verger, Betty
Verhoeven, Leona
Verhoeven, Martin
Verhoeven, Wesley
Vermeer, Dick
Vermeer, Jantina
Vernola Ranch
Vernola, Anthonietta
Vernola, Anthony
Vernola, Frank
Vernola, Mary Ann
Vernola, Pat F.
Vestal, Frances Lorraine
Visser, Gerrit
Visser, Grace
Visser, Henry
Visser, Jess
Visser, Louie
Visser, Neil
Visser, Sam
Visser, Stanley
Visser, Tony D.
Visser, Walter G.
Von Der Ahe, Fredric T.
Von Euw, George
Von Euw, Majorie
Von Lusk, a limited partnership
Voortman, Anna Marie
Voortman, Edward
Voortman, Edwin J.
Voortman, Gertrude Dena
Wagner, Richard H.
Walker, Carole R.
Walker, Donald E.
Walker, Wallace W.
Wardle, Donald M.
Warner, Dillon B.
Warner, Minnie
Wassenaar, Peter W.
Waters, Michael

Weeda, Adriana
Wiersma, Jake

EXHIBIT "C"

STIPULATING OVERLYING AGRICULTURAL PRODUCERS

Weeda, Daniel
Weeks, O. L.
Weeks, Verona E.
Weidman, Maurice
Weidman, Virginia
Weiland, Adaline I.
Weiland, Peter J.
Wesselink, Jules
West, Katharine R.
West, Russel
West, Sharon Ann
Western Horse Property
Westra, Alice
Westra, Henry
Westra, Hilda
Westra, Jake J.
Weststeyn, Freida
Weststeyn, Pete
Whitehurst, Louis G.
Whitehurst, Pearl L.
Whitmore, David L.
Whitmore, Mary A.
Whitney, Adolph M.
Wiersema, Harm
Wiersema, Harry
Wiersma, Ellen H.
Wiersma, Gladys J.
Wiersma, Otto
Wiersma, Pete
Winchell, Verne H., Trustee
Wind, Frank
Wind, Fred
Wind, Hilda
Wind, Johanna
Woo, Frank
Woo, Sem Gee
Wybenga, Clarence
Wybenga, Gus
Wybenga, Gus K.
Wybenga, Sylvia
Wynja, Andy
Wynja, Iona F.
Yellis, Mildred
Yellis, Thomas E.
Ykema-Harmsen Dairy
Ykema, Floris
Ykema, Harriet
Yokley, Betty Jo
Yokley, Darrell A.
Zak, Zan
Zivelonghi, George
Zivelonghi, Margaret
Zwaagstra, Jake
Zwaagstra, Jessie M.
Zwart, Case

EXHIBIT "C"

STIPULATING OVERLYING AGRICULTURAL PRODUCERS

NON-PRODUCER WATER DISTRICTS

Chino Basin Municipal Water District

Chino Basin Water Conservation District

Pomona Valley Municipal Water District

Western Municipal Water District of Riverside County

DEFAULTING OVERLYING AGRICULTURAL PRODUCERS

Cheryl L. Bain	Roy W. Lantis
Warren Bain	Sharon I. Lantis
John M. Barcelona	Frank Lorenz
Letty Bassler	Dagney H. MacDonald
John Brazil	Frank E. Martin
John S. Briano	Ruth C. Martin
Lupe Briano	Connie S. Mello
Paul A. Briano	Naldiro J. Mello
Tillie Briano	Felice Miller
Arnie B. Carlson	Ted Miller
John Henry Fikse	Masao Nerio
Phyllis S. Fikse	Tom K. Nerio
Lewellyn Flory	Toyo Nerio
Mary I. Flory	Yuriko Nerio
L. H. Glazer	Harold L. Rees
Dorothy Goodman	Alden G. Rose
Sidney D. Goodman	Claude Rouleau, Jr.
Frank Grossi	Patricia M. Rouleau
Harada Brothers	Schultz Enterprises
Ellen Hettinga	Albert Shaw

EXHIBIT "C"

STIPULATING OVERLYING AGRICULTURAL PRODUCERS

Hein Hettinga

Dick Hofstra, Jr.

Benjamin M. Hughey

Frieda L. Hughey

Guillaume Indart

Ellwood B. Johnston, Trustee

Perry Kruckenberg, Jr.

Martin Verburg

Donna Vincent

Larry Vincent

Cliff Wolfe & Associates

Ada M. Woll

Zarubica Co.

Lila Shaw

Cathy M. Stewart

Marvin C. Stewart

Betty Ann Stone

John B. Stone

Vantoll Cattle Co., Inc.

Catherine Verburg

EXHIBIT D – OVERLYING NON-AGRICULTURAL RIGHTS

EXHIBIT "D"

OVERLYING NON-AGRICULTURAL RIGHTS

Party	Total Overlying Non-Agricultural Rights (Acre-Feet)	Share of Safe Yield (Acre-Feet)
Ameron Steel Producers, Inc.	125	97.858
County of San Bernardino (Airport)	171	133.870
Conrock Company	406	317.844
Kaiser Steel Corporation	3,743	2,930.274
Red Star Fertilizer	20	15.657
Southern California Edison Co.	1,255	982.499
Space Center, Mira Loma	133	104.121
Southern Service Co. dba Blue Seal Linen	24	18.789
Sunkist Growers, Inc.	2,393	1,873.402
Carlsberg Mobile Home Properties, Ltd '73	593	464.240
Union Carbide Corporation	546	427.446
Quaker Chemical Co.	0	0.000
Totals	9,409	7,366.000

EXHIBIT E – APPROPRIATIVE RIGHTS

EXHIBIT "E"

APPROPRIATIVE RIGHTS

Party	Appropriative Right (Acre Feet)	Share of Initial Operating Safe Yield (Acre-Feet)	Share of Operating Safe Yield (Percent)
City of Chino	5,271.7	3,670.067	6.693
City of Norco	289.5	201.545	0.368
City of Ontario	16,337.4	11,373.816	20.742
City of Pomona	16,110.5	11,215.852	20.454
City of Upland	4,097.2	2,852.401	5.202
Cucamonga County Water District	4,431.0	3,084.786	5.626
Jurupa Community Services District	1,104.1	768.655	1.402
Monte Vista County Water District	5,958.7	4,148.344	7.565
West San Bernardino County Water District	925.5	644.317	1.175
Etiwanda Water Company	768.0	534.668	0.975
Feldspar Gardens Mutual Water Company	68.3	47.549	0.087
Fontana Union Water Company	9,188.3	6,396.736	11.666
Marygold Mutual Water Company	941.3	655.317	1.195
Mira Loma Water Company	1,116.0	776.940	1.417
Monte Vista Irrigation Company	972.1	676.759	1.234
Mutual Water Company of Glen Avon Heights	672.2	467.974	0.853
Park Water Company	236.1	164.369	0.300
Pomona Valley Water Company	3,106.3	2,162.553	3.944
San Antonio Water Company	2,164.5	1,506.888	2.748
Santa Ana River Water Company	1,869.3	1,301.374	2.373
Southern California Water Company	1,774.5	1,235.376	2.253
West End Consolidated Water Company	1,361.3	947.714	1.728
TOTAL	78,763.8	55,834.000	100.000

EXHIBIT F – OVERLYING (AGRICULTURAL) POOL

EXHIBIT "F"

OVERLYING (AGRICULTURAL) POOL

POOLING PLAN

1. Membership in Pool. The State of California and all producers listed in Exhibit "C" shall be the initial members of this pool, which shall include all producers of water for overlying uses other than industrial or commercial purposes.

2. Pool Meetings. The members of the pool shall meet annually, in person or by proxy, at a place and time to be designated by Watermaster for purposes of electing members of the Pool Committee and conducting any other business of the pool. Special meetings of the membership of the pool may be called and held as provided in the rules of the pool.

3. Voting. All voting at meetings of pool members shall be on the basis of one vote for each 100 acre feet or any portion thereof of production from Chino Basin during the preceding year, as shown by the records of Watermaster.

4. Pool Committee. The Pool Committee for this pool shall consist of not less than nine (9) representatives selected at large by members of the pool. The exact number of members of the Pool Committee in any year shall be as determined by majority vote of the voting power of members of the pool in attendance at the annual pool meeting. Each member of the Pool Committee shall have one vote and shall serve for a two-year term. The members first elected shall classify themselves by lot so that approximately one-half serve an initial one-year term. Vacancies during any term shall be filled by a majority of the remaining members of the Pool Committee.

5. Advisory Committee Representatives. The number of representatives of the Pool Committee on the Advisory Committee shall be as provided in the rules of the pool from time to time but not exceeding ten (10). The voting power of the pool on the Advisory Committee shall be apportioned and exercised as determined from time to time by the Pool Committee.

6. Replenishment Obligation. The pool shall provide funds for replenishment of any production by persons other than members of the Overlying Non-Agricultural Pool or Appropriator Pool,

in excess of the pool's share of Safe Yield. During the first five (5) years of operations of the Physical Solution, reasonable efforts shall be made by the Pool Committee to equalize annual assessments.

7. Assessments. All assessments in this pool (whether for replenishment water cost or for pool administration or the allocated share of Watermaster administration) shall be in an amount uniformly applicable to all production in the pool during the preceding year or calendar quarter. Provided, however, that the Agricultural Pool Committee, may recommend to the Court modification of the method of assessing pool members, inter se, if the same is necessary to attain legitimate basin management objectives, including water conservation and avoidance of undesirable socio-economic consequences. Any such modification shall be initiated and ratified by one of the following methods:

(a) Excess Production. - In the event total pool production exceeds 100,000 acre feet in any year, the Pool Committee shall call and hold a meeting, after notice to all pool members, to consider remedial modification of the assessment formula.

(b) Producer Petition. - At any time after the fifth full year of operation under the Physical Solution, a petition by ten percent (10%) of the voting power or membership of the Pool shall compel the holding of a noticed meeting to consider revision of said formula of assessment for replenishment water.

In either event, a majority action of the voting power in attendance at such pool members' meeting shall be binding on the Pool Committee.

8. Rules. - The Pool Committee shall adopt rules for conducting meetings and affairs of the committee and for administering its program and in amplification of the provisions, but not inconsistent with, this pooling plan.

//

//

//

EXHIBIT "G"

OVERLYING (NON-AGRICULTURAL) POOL

POOLING PLAN

1. Membership in Pool. The initial members of the pool, together with the decreed share of the Safe Yield of each, are listed in Exhibit "D". Said pool includes producers of water for overlying industrial or commercial non-agricultural purposes, or such producers within the Pool who may hereafter take water pursuant to Paragraph 8 hereof.

2. Pool Committee. The Pool Committee for this pool shall consist of one representative designated by each member of the pool. Voting on the committee shall be on the basis of one vote for each member, unless a volume vote is demanded, in which case votes shall be allocated as follows:

The volume voting power on the Pool Committee shall be 1,484 votes. Of these, 742 votes shall be allocated on the basis of one vote for each ten (10) acre feet or fraction thereof of decreed shares in Safe Yield. (See Exhibit "D"). The remaining 742 votes shall be allocated proportionally on the basis of assessments paid to Watermaster during the preceding year.[8]

Affirmative action of the Committee shall require a majority of the voting power of the members in attendance, provided that it includes concurrence by at least one-third of its total members.[9]

3. Advisory Committee Representatives. At least three (3) members of the Pool Committee shall be designated by said committee to serve on the Advisory Committee. The exact number of such representatives at any time shall be as determined by the Pool Committee. The voting power of the pool shall be exercised in the Advisory Committee as a unit, based upon the vote of a majority of said representatives.

[8] Or production assessments paid under Water Code Section 72140 et seq., as to years prior to the second year of operation under the Physical Solution hereunder.
[9] Order dated October 8, 2010.

4. Replenishment Obligation. The pool shall provide funds for replenishment of any production in excess of the pool's share of Safe Yield in the preceding year.

5. Assessment**s**.[10]

(a) Replenishment Assessments. Each member of this pool shall pay an assessment equal to the cost of replenishment water times the number of acre feet of production by such producer during the preceding year in excess of (a) his decreed share of the Safe Yield, plus (b) any carry-over credit under Paragraph 7 hereof.

(b) Administrative Assessments. In addition, the cost of the allocated share of Watermaster administration expense shall be recovered on an equal assessment against each acre foot of production in the pool during such preceding fiscal year or calendar quarter; and in the case of Pool members who take substitute ground water as set forth in Paragraph 8 hereof, such producer shall be liable for its share of administration assessment, as if the water so taken were produced, up to the limit of its decreed share of Safe Yield.

(c) Special Project OBMP Assessment. Each year, every member of this Pool will dedicate ten (10) percent of their annual share of Operating Safe Yield to Watermaster or in lieu thereof Watermaster will levy a Special Project OBMP Assessment in an amount equal to ten percent of the Pool member's respective share of Safe Yield times the then-prevailing MWD Replenishment Rate.

6. Assignment. Rights herein decreed are appurtenant to ***that*** land and are only assignable with the land for overlying use thereon; provided, however, **(a)** that any appropriator who may, directly or indirectly, undertake to provide water service to such overlying lands may, by an appropriate agency agreement on a form approved by Watermaster, exercise said overlying right to the extent, but only to the extent necessary to provide water service to said overlying lands***,*** and ***(b) the members of the pool shall have the right to Transfer or lease their quantified production rights within the pool or to***

[10] Order dated December 21, 2007.

Watermaster in conformance with the procedures described in the Peace Agreement between the Parties therein, dated June 29, 2000 for the term of the Peace Agreement. [11]

7. Carry-over. Any member of the pool who produces less than its assigned water share of Safe Yield may carry such unexercised right forward for exercise in subsequent years. The first water produced during any such subsequent year shall be deemed to be an exercise of such carry-over right. In the event the aggregate carry-over by any pool member exceeds its share of Safe Yield, such member shall, as a condition of preserving such surplus carryover, execute a storage agreement with Watermaster.

8. Substitute Supplies. To the extent that any Pool member, at the request of Watermaster and with the consent of the Advisory Committee, takes substitute surface water in lieu of producing ground water otherwise subject to production as an allocated share of Safe Yield, said party shall nonetheless remain a member of this Pool.

9. Physical Solution Transfers. All overlying rights are appurtenant to the land and cannot be assigned or conveyed separate or apart therefrom except that for the term of the Peace Agreement the members of the Overlying (Non-Agricultural) Pool shall have the discretionary right to Transfer or lease their quantified Production rights and carry-over water held in storage accounts in quantities that each member may from time to time individually determine as Transfers in furtherance of the Physical Solution: (i) within the Overlying (Non-Agricultural) Pool; (ii) to Watermaster in conformance with the procedures described in the Peace Agreement between the Parties therein, dated June 29, 2000; (iii) in conformance with the procedures described in Paragraph I of the Purchase and Sale Agreement for the Purchase of Water by Watermaster from Overlying (Non-Agricultural Pool dated June 30, 2007; or (iv) to Watermaster and thence to members of the Appropriative Pool in accordance with the following guidelines and those procedures Watermaster may further provide in Watermaster's Rules and Regulations:

[11] Order dated September 28, 2000 and Order dated April 19, 2001.

(a) By December 31 of each year, the members of the Overlying (Non-Agricultural) Pool shall notify Watermaster of the amount of water each member shall make available in their individual discretion for purchase by the Appropriators. By January 31 of each year, Watermaster shall provide a Notice of Availability of each Appropriator's pro-rata share of such water;

(b) Except as they may be limited by paragraph 9(e) below, each member of the Appropriative Pool will have, in their discretion, a right to purchase its pro-rata share of the supply made available from the Overlying (Non-Agricultural) Pool at the price established in 9(d) below. Each Appropriative Pool member's pro-rata share of the available supply will be based on each Producer's combined total share of Operating Safe Yield and the previous year's actual Production by each party;

(c) If any member of the Appropriative Pool fails to irrevocably commit to their allocated share by March 1 of each year, its share of the Overlying (Non-Agricultural) Pool water will be made available to all other members of the Appropriative Pool according to the same proportions as described in 9(b) above and at the price established in Paragraph 9(d) below. Each member of the Appropriative Pool shall complete its payment for its share of water made available by June 30 of each year.

(d) Commensurate with the cumulative commitments by members of the Appropriative Pool pursuant to (b) and (c) above, Watermaster will purchase the surplus water made available by the Overlying (Non-Agricultural) Pool water on behalf of the members of the Appropriative Pool on an annual basis at 92% of the then-prevailing "MWD Replenishment Rate" and each member of the Appropriative Pool shall complete its payment for its determined share of water made available by June 30 of each year.

(e) Any surplus water cumulatively made available by all members of the Overlying (Non-Agricultural) Pool that is not purchased by Watermaster after completion of the process set forth herein will be pro-rated among the members of the Pool in proportion to the total quantity offered for transfer in accordance with this provision and may be retained by the

Overlying (Non-Agricultural) Pool member without prejudice to the rights of the members of the Pool to make further beneficial us or transfer of the available surplus.

(f) Each Appropriator shall only be eligible to purchase their pro-rata share under this procedure if the party is: (i) current on all their assessments; and (ii) in compliance with the OBMP.

(g) The right of any member of the Overlying (Non-Agricultural) Pool to transfer water in accordance with this Paragraph 9(a)-(c) in any year is dependent upon Watermaster making a finding that the member of the Overlying (Non-Agricultural) Pool is using recycled water where it is both physically available and appropriate for the designated end use in lieu of pumping groundwater.

(h) Nothing herein shall be construed to affect or limit the rights of any Party to offer or accept an assignment as authorized by the Judgment Exhibit "G" paragraph 6 above, or to affect the rights of any Party under a valid assignment.

~~9~~**10**. Rules. The Pool Committee shall adopt rules for administering its program and in amplification of the provisions, but not inconsistent with, this pooling plan.

EXHIBIT G – OVERLYING (NON-AGRICULTURAL)

EXHIBIT "G"

OVERLYING (NON-AGRICULTURAL) POOL

POOLING PLAN

1. Membership in Pool. The initial members of the pool, together with the decreed share of the Safe Yield of each, are listed in Exhibit "D". Said pool includes producers of water for overlying industrial or commercial non-agricultural purposes, or such producers within the Pool who may hereafter take water pursuant to Paragraph 8 hereof.

2. Pool Committee. The Pool Committee for this pool shall consist of one representative designated by each member of the pool. Voting on the committee shall be on the basis of one vote for each member, unless a volume vote is demanded, in which case votes shall be allocated as follows:

The volume voting power on the Pool Committee shall be 1,484 votes. Of these, 742 votes shall be allocated on the basis of one vote for each ten (10) acre feet or fraction thereof of decreed shares in Safe Yield. (See Exhibit "D"). The remaining 742 votes shall be allocated proportionally on the basis of assessments paid to Watermaster during the preceding year.[8]

Affirmative action of the Committee shall require a majority of the voting power of the members in attendance, provided that it includes concurrence by at least one-third of its total members.[9]

3. Advisory Committee Representatives. At least three (3) members of the Pool Committee shall be designated by said committee to serve on the Advisory Committee. The exact number of such representatives at any time shall be as determined by the Pool Committee. The voting power of the pool shall be exercised in the Advisory Committee as a unit, based upon the vote of a majority of said representatives.

[8] Or production assessments paid under Water Code Section 72140 et seq., as to years prior to the second year of operation under the Physical Solution hereunder.
[9] Order dated October 8, 2010.

4. Replenishment Obligation. The pool shall provide funds for replenishment of any production in excess of the pool's share of Safe Yield in the preceding year.

5. Assessment**s**.[10]

(a) Replenishment Assessments. Each member of this pool shall pay an assessment equal to the cost of replenishment water times the number of acre feet of production by such producer during the preceding year in excess of (a) his decreed share of the Safe Yield, plus (b) any carry-over credit under Paragraph 7 hereof.

(b) Administrative Assessments. In addition, the cost of the allocated share of Watermaster administration expense shall be recovered on an equal assessment against each acre foot of production in the pool during such preceding fiscal year or calendar quarter; and in the case of Pool members who take substitute ground water as set forth in Paragraph 8 hereof, such producer shall be liable for its share of administration assessment, as if the water so taken were produced, up to the limit of its decreed share of Safe Yield.

(c) Special Project OBMP Assessment. Each year, every member of this Pool will dedicate ten (10) percent of their annual share of Operating Safe Yield to Watermaster or in lieu thereof Watermaster will levy a Special Project OBMP Assessment in an amount equal to ten percent of the Pool member's respective share of Safe Yield times the then-prevailing MWD Replenishment Rate.

6. Assignment. Rights herein decreed are appurtenant to ***that*** land and are only assignable with the land for overlying use thereon; provided, however, **(a)** that any appropriator who may, directly or indirectly, undertake to provide water service to such overlying lands may, by an appropriate agency agreement on a form approved by Watermaster, exercise said overlying right to the extent, but only to the extent necessary to provide water service to said overlying lands***,*** and ***(b) the members of the pool shall have the right to Transfer or lease their quantified production rights within the pool or to***

[10] Order dated December 21, 2007.

Watermaster in conformance with the procedures described in the Peace Agreement between the Parties therein, dated June 29, 2000 for the term of the Peace Agreement. [11]

7. Carry-over. Any member of the pool who produces less than its assigned water share of Safe Yield may carry such unexercised right forward for exercise in subsequent years. The first water produced during any such subsequent year shall be deemed to be an exercise of such carry-over right. In the event the aggregate carry-over by any pool member exceeds its share of Safe Yield, such member shall, as a condition of preserving such surplus carryover, execute a storage agreement with Watermaster.

8. Substitute Supplies. To the extent that any Pool member, at the request of Watermaster and with the consent of the Advisory Committee, takes substitute surface water in lieu of producing ground water otherwise subject to production as an allocated share of Safe Yield, said party shall nonetheless remain a member of this Pool.

9. Physical Solution Transfers. All overlying rights are appurtenant to the land and cannot be assigned or conveyed separate or apart therefrom except that for the term of the Peace Agreement the members of the Overlying (Non-Agricultural) Pool shall have the discretionary right to Transfer or lease their quantified Production rights and carry-over water held in storage accounts in quantities that each member may from time to time individually determine as Transfers in furtherance of the Physical Solution: (i) within the Overlying (Non-Agricultural) Pool; (ii) to Watermaster in conformance with the procedures described in the Peace Agreement between the Parties therein, dated June 29, 2000; (iii) in conformance with the procedures described in Paragraph I of the Purchase and Sale Agreement for the Purchase of Water by Watermaster from Overlying (Non-Agricultural Pool dated June 30, 2007; or (iv) to Watermaster and thence to members of the Appropriative Pool in accordance with the following guidelines and those procedures Watermaster may further provide in Watermaster's Rules and Regulations:

[11] Order dated September 28, 2000 and Order dated April 19, 2001.

(a) By December 31 of each year, the members of the Overlying (Non-Agricultural) Pool shall notify Watermaster of the amount of water each member shall make available in their individual discretion for purchase by the Appropriators. By January 31 of each year, Watermaster shall provide a Notice of Availability of each Appropriator's pro-rata share of such water;

(b) Except as they may be limited by paragraph 9(e) below, each member of the Appropriative Pool will have, in their discretion, a right to purchase its pro-rata share of the supply made available from the Overlying (Non-Agricultural) Pool at the price established in 9(d) below. Each Appropriative Pool member's pro-rata share of the available supply will be based on each Producer's combined total share of Operating Safe Yield and the previous year's actual Production by each party;

(c) If any member of the Appropriative Pool fails to irrevocably commit to their allocated share by March 1 of each year, its share of the Overlying (Non-Agricultural) Pool water will be made available to all other members of the Appropriative Pool according to the same proportions as described in 9(b) above and at the price established in Paragraph 9(d) below. Each member of the Appropriative Pool shall complete its payment for its share of water made available by June 30 of each year.

(d) Commensurate with the cumulative commitments by members of the Appropriative Pool pursuant to (b) and (c) above, Watermaster will purchase the surplus water made available by the Overlying (Non-Agricultural) Pool water on behalf of the members of the Appropriative Pool on an annual basis at 92% of the then-prevailing "MWD Replenishment Rate" and each member of the Appropriative Pool shall complete its payment for its determined share of water made available by June 30 of each year.

(e) Any surplus water cumulatively made available by all members of the Overlying (Non-Agricultural) Pool that is not purchased by Watermaster after completion of the process set forth herein will be pro-rated among the members of the Pool in proportion to the total quantity offered for transfer in accordance with this provision and may be retained by the

Overlying (Non-Agricultural) Pool member without prejudice to the rights of the members of the Pool to make further beneficial us or transfer of the available surplus.

(f) Each Appropriator shall only be eligible to purchase their pro-rata share under this procedure if the party is: (i) current on all their assessments; and (ii) in compliance with the OBMP.

(g) The right of any member of the Overlying (Non-Agricultural) Pool to transfer water in accordance with this Paragraph 9(a)-(c) in any year is dependent upon Watermaster making a finding that the member of the Overlying (Non-Agricultural) Pool is using recycled water where it is both physically available and appropriate for the designated end use in lieu of pumping groundwater.

(h) Nothing herein shall be construed to affect or limit the rights of any Party to offer or accept an assignment as authorized by the Judgment Exhibit "G" paragraph 6 above, or to affect the rights of any Party under a valid assignment.

~~9~~**10**. Rules. The Pool Committee shall adopt rules for administering its program and in amplification of the provisions, but not inconsistent with, this pooling plan.

EXHIBIT H – APPROPRIATIVE POOL

EXHIBIT "H"

APPROPRIATIVE POOL

POOLING PLAN

1. Qualification for Pool. Any city, district or other public entity and public utility -- either regulated under Public Utilities Commission jurisdiction, or exempt therefrom as a non-profit mutual water company (other than those assigned to the Overlying (Agricultural) Pool) -- shall be a member of this pool. All initial members of the pool are listed in Exhibit "E", together with their respective appropriative rights and acre foot allocation and percentage shares of the initial and subsequent Operating Safe Yield.

2. Pool Committee. The Pool Committee shall consist of one (1) representative appointed by each member of the Pool.

3. Voting. The total voting power on the Pool Committee shall be 1,000 votes. Of these, 500 votes shall be allocated in proportion to decreed percentage shares in Operating Safe Yield. The remaining 500 votes shall be allocated proportionally on the basis of assessments paid to Watermaster during the preceding year. Routine business of the Pool Committee may be conducted on the basis of one vote per member, but upon demand of any member a weighted vote shall be taken. Affirmative action of the Committee shall require a majority of the voting power of members in attendance, provided that it includes concurrence by at least one-third of its total members.

4. Advisory Committee Representatives. **Members of the Pool Committee shall be designated to represent this pool on the Advisory Committee *on the following basis*: Each major appropriator, i.e., the owner of an adjudicated appropriative right in excess of 3,000 acre feet, *or each appropriator that produces in excess of 3,000 acre feet based upon the prior year's production,* shall be entitled to one representative. *Two additional representatives* of the Appropriative Pool on the Advisory Committee shall be elected at large by the remaining members of the pool. The voting power of the Appropriative Pool on the Advisory Committee shall be apportioned between the major appropriator representatives in proportion to their respective voting power in the Pool Committee. The two representatives of the remaining appropriators shall exercise equally the voting power proportional to the Pool Committee voting power of said**

remaining appropriators; provided, however, that if any representative fails to attend an Advisory Committee meeting, the voting power of that representative shall be allocated among the representatives of the Appropriative Pool in attendance in the same proportion as their respective voting powers. [12]

5. Replenishment Obligation. The pool shall provide funds for purchase of replenishment water to replace any production by the pool in excess of Operating Safe Yield during the preceding year.

6. Administrative Assessment. Costs of administration of this pool and its share of general Watermaster expense shall be recovered by a uniform assessment applicable to all production during the preceding year.

7. Replenishment Assessment. The cost of replenishment water required to replace production from Chino Basin in excess of Operating Safe Yield in the preceding year shall be allocated and recovered as follows:

(a) For production, other than for increased export, within CBMWD or WMWD:

(1) Gross Assessment. 15% of such replenishment water costs shall be recovered by a uniform assessment against all production of each appropriator producing in said area during the preceding year.

(2) Net Assessment. The remaining 85% of said costs shall be recovered by a uniform assessment on each acre foot of production from said area by each such appropriator in excess of his allocated share of Operating Safe Yield during said preceding year.

(b) For production which is exported for use outside Chino Basin in excess of maximum export in any year through 1976, such increased export production shall be assessed against the exporting appropriator in an amount sufficient to purchase replenishment water from CBMWD or WMWD in the amount of such excess.

[12] Order dated September 18, 1996.

(c) For production within SBVMWD or PVMWD:

By an assessment on all production in excess of an appropriator's share of Operating Safe Yield in an amount sufficient to purchase replenishment water through SBVMWD or MWD in the amount of such excess.

8. Socio-Economic Impact Review. The parties have conducted certain preliminary socio-economic impact studies. Further and more detailed socio-economic impact studies of the assessment formula and its possible modification shall be undertaken for the Appropriator Pool by Watermaster no later than ten (10) years from the effective date of this Physical Solution, or whenever total production by this pool has increased by 30% or more over the decreed appropriative rights, whichever is first.

9. Facilities Equity Assessment. Watermaster may, upon recommendation of the Pool Committee, institute proceedings for levy and collection of a Facilities Equity Assessment for the purposes and in accordance with the procedures which follow:

(a) Implementing Circumstances. - There exist several sources of supplemental water available to Chino Basin, each of which has a differential cost and quantity available. The optimum management of the entire Chino Basin water resource favors the maximum use of the lowest cost supplemental water to balance the supplies of the Basin, in accordance with the Physical Solution. The varying sources of supplemental water include importations from MWD and SBVMWD, importation of surface and ground water supplies from other basins in the immediate vicinity of Chino Basin, and utilization of reclaimed water. In order to fully utilize any of such alternate sources of supply, it will be essential for particular appropriators having access to one or more of such supplies to have invested, or in the future to invest, directly or indirectly, substantial funds in facilities to obtain and deliver such water to an appropriate point of use. To the extent that the use of less expensive alternative sources of supplemental water can be maximized by the inducement of a Facilities Equity Assessment, as herein provided, it is to the long-term benefit of the entire basin that such assessment be authorized and levied by Watermaster.

(b) Study and Report. - At the request of the Pool Committee, Watermaster shall undertake a survey study of the utilization of alternate supplemental supplies by

members of the Appropriative Pool which would not otherwise be utilized and shall prepare a report setting forth the amount of such alternative supplies being currently utilized, the amount of such supplies which could be generated by activity within the pool, and the level of cost required to increase such uses and to optimize the total supplies available to the basin. Said report shall contain an analysis and recommendation for the levy of a necessary Facilities Equity Assessment to accomplish said purpose.

(c) Hearing. - If the said report by Watermaster contains a recommendation for imposition of a Facilities Equity Assessment, and the Pool Committee so requests, Watermaster shall notice and hold a hearing not less than 60 days after distribution of a copy of said report to each member of the pool, together with a notice of the hearing date. At such hearing, evidence shall be taken with regard to the necessity and propriety of the levy of a Facilities Equity Assessment and full findings and decision shall be issued by Watermaster.

(d) Operation of Assessment. - If Watermaster determines that it is appropriate that a Facilities Equity Assessment be levied in a particular year, the amount of additional supplemental supplies which should be generated by such assessment shall be estimated. The cost of obtaining such supplies, taking into consideration the investment in necessary facilities shall then be determined and spread equitably among the producers within the pool in a manner so that those producers not providing such additional lower cost supplemental water, and to whom a financial benefit will result, may bear a proportionate share of said costs, not exceeding said benefit; provided that any producer furnishing such supplemental water shall not thereby have its average cost of water in such year reduced below such producer's average cost of pumping from the Basin. In so doing, Watermaster shall establish a percentage of the total production by each party which may be produced without imposition of a Facilities Equity Assessment. Any member of the pool producing more water than said percentage shall pay such Facilities Equity Assessment on any such excess production. Watermaster is authorized to transmit and pay the proceeds of such Facilities Equity Assessment to those producers who take less than their share of Basin water by reason of furnishing a higher percentage of their requirements through use of supplemental water.

10. Unallocated Safe Yield Water. To the extent that, in any five years, any portion of the share of Safe Yield allocated to the Overlying (Agricultural) Pool is not produced, such water shall be available for reallocation to members of the Appropriative Pool, as follows:

(a) Priorities. - Such allocation shall be made in the following sequence:

(1) to supplement, in the particular year, water available from Operating Safe Yield to compensate for any reduction in the Safe Yield by reason of recalculation thereof after the tenth year of operation hereunder.

(2) pursuant to conversion claims as defined in Subparagraph (b) hereof.

(3) as a supplement to Operating Safe Yield, without regard to reductions in Safe Yield.

(b) Conversion Claims.[13] The following procedures may be utilized by any appropriator:

1) Record of Unconverted Agricultural Acreage. Watermaster shall maintain on an ongoing basis a record with appropriate related maps of all agricultural acreage within the Chino Basin subject to being converted to appropriative water use pursuant to the provisions of this subparagraph. An initial identification of such acreage as of June 30, 1995 is attached hereto as Appendix 1.

(2) Record of *Water Service Conversion*. Any appropriator who undertakes to permanently provide water service to lands *subject to conversion* may report such intent to change water service to Watermaster. Watermaster *should* thereupon verify such change in water service and shall maintain a record and account for each appropriator of the total acreage involved. *Should, at any time, converted acreage return to water service from the Overlying (Agricultural) Pool, Watermaster shall return such acreage to unconverted status*

[13] Order dated November 17, 1995.

and correspondingly reduce or eliminate any allocation accorded to the appropriator involved.

(*3*) Allocation *of Safe Yield Rights*

(i) *For the term of the Peace Agreement in* any year in which *sufficient* unallocated Safe Yield from the Overlying (Agricultural) Pool is available for such conversion claims, Watermaster shall allocat*e to* each appropriator with a conversion claim *2.0* acre feet of unallocated Safe Yield water for each converted *acre for which conversion has been approved and recorded by the Watermaster.* [14]

(ii) In any year in which the unallocated Safe Yield water from the Overlying (Agricultural) Pool is not sufficient to satisfy all outstanding conversion claims pursuant to subparagraph (i) herein above, Watermaster shall establish allocation percentages for each appropriator with conversion claims. The percentages shall be based upon the ratio of the total of such converted acreage approved and recorded for each appropriators's account in comparison to the total of converted acreage approved and recorded for all appropriators. Watermaster shall apply such allocation percentage for each appropriator to the total unallocated Safe Yield water available for conversion claims to derive the amount allocable to each appropriator.

***(4)* Notice *and Allocation*. Notice of *the* special allocation of Safe Yield water pursuant to conversion claims shall be given to each appropriator and shall be treated for purposes of this Physical Solution as an addition to such appropriator's share of the Operating Safe Yield for the particular year only.**

[14] Order dated September 28, 2000 and Order dated April 19, 2001.

(5) Administrative Costs. Any costs of Watermaster attributable to the administration of such special allocations and conversion claims shall be assessed against the appropriators participating in such reporting, apportioned in accordance with the total amount of converted acreage held by each appropriator participating in the conversion program.

11. In Lieu Procedures. There are, or may develop, certain areas within Chino Basin where good management practices dictate that recharge of the basin be accomplished, to the extent practical, by taking surface supplies of supplemental water in lieu of ground water otherwise subject to production as an allocated share of Operating Safe Yield.

(a) Method of Operation. - An appropriator producing water within such designated in lieu area who is willing to abstain for any reason from producing any portion of such producer's share of Operating Safe Yield in any year may offer such unpumped water to Watermaster. In such event, Watermaster shall purchase said water in place,in lieu of spreading replenishment water, which is otherwise required to make up for over production. The purchase price for in lieu water shall be the lesser of:

(1) Watermaster's current cost of replenishment water, whether or not replenishment water is currently then obtainable, plus the cost of spreading; or

(2) The cost of supplemental surface supplies to the appropriator, less

a. said appropriator's average cost of ground water production, and

b. the applicable production assessment were the water produced.

Where supplemental surface supplies consist of MWD or SBVMWD supplies, the cost of treated, filtered State water from such source shall be deemed the cost of supplemental surface supplies to the appropriator for purposes of such calculation.

In any given year in which payments may be made pursuant to a Facilities Equity Assessment, as to any given quantity of water the party will be entitled to payment under this section or pursuant to the Facilities Equity Assessment, as the party elects, but not under both.

(b) Designation of In Lieu Areas. - The first in lieu area is designated as the "In Lieu Area No. 1" and consists of an area wherein nitrate levels in the ground water generally exceed 45 mg/l, and is shown on Exhibit "J" hereto. Other in lieu areas may be designated by subsequent order of Watermaster upon recommendation or approval by Advisory Committee. Said in lieu areas may be enlarged, reduced or eliminated by subsequent orders; provided, however, that designation of In Lieu Areas shall be for a minimum fixed term sufficient to justify necessary capital investment. In Lieu Area No. 1 may be enlarged, reduced or eliminated in the same manner, except that any reduction of its original size or elimination thereof shall require the prior order of Court.

12. Carry-over. Any appropriator who produces less than his assigned share of Operating Safe Yield may carry such unexercised right forward for exercise in subsequent years. The first water produced during any such subsequent year shall be deemed to be an exercise of such carry-over right. In the event the aggregate carry-over by any appropriator exceeds its share of Operating Safe Yield, such appropriator shall, as a condition of preserving such surplus carry-over, execute a storage agreement with Watermaster. Such appropriator shall have the option to pay the gross assessment applicable to such carry-over in the year in which it accrued.

13. Assignment, Transfer and Lease. Appropriative rights, and corresponding shares of Operating Safe Yield, may be assigned or may be leased or licensed to another appropriator for exercise in a given year. Any transfer, lease or license shall be ineffective until written notice thereof is furnished to and approved as to form by Watermaster, in compliance with applicable Watermaster rules. Watermaster shall not approve transfer, lease or license of a right for exercise in an area or under conditions where such production would be contrary to sound basin management or detrimental to the rights or operations of other producers.

14. Rules. The Pool Committee shall adopt rules for administering its program and in amplification of the provisions, but not inconsistent with, this pooling plan.

//

//

//

EXHIBIT I – ENGINEERING APPENDIX

EXHIBIT "I"

ENGINEERING APPENDIX

1. Basin Management Parameters. In the process of implementing the physical solution for Chino Basin, Watermaster shall consider the following parameters:

(a) Pumping Patterns. - Chino Basin is a common supply for all persons and agencies utilizing its waters. It is an objective in management of the Basin's waters that no producer be deprived of access to said waters by reason of unreasonable pumping patterns, nor by regional or localized recharge of replenishment water, insofar as such result may be practically avoided.

(b) Water Quality. - Maintenance and improvement of water quality is a prime consideration and function of management decisions by Watermaster.

(c) Economic Considerations. - Financial feasibility, economic impact and the cost and optimum utilization of the Basin's resources and the physical facilities of the parties are objectives and concerns equal in importance to water quantity and quality parameters.

2. Hydraulic Control and Re-Operation. In accordance with the purpose and objective of the Physical Solution to "establish a legal and practical means for making the maximum reasonable beneficial use of the waters of the Chino Basin" (paragraph 39) including but not limited to the use and recapture of reclaimed water (paragraph 49(a)) and the identified Basin Management Parameters set forth above, Watermaster will manage the Basin to secure and maintain Hydraulic Control through controlled overdraft.

(a) Hydraulic Control. "Hydraulic Control" means the reduction of groundwater discharge from the Chino North Management Zone to the Santa Ana River to de minimus quantities. The Chino North Management Zone is more fully described and set forth in Attachment I-1 to this Engineering Appendix. By obtaining Hydraulic Control, Watermaster will ensure that the water management activities in the Chino North Management Zone do not cause

materially adverse impacts to the beneficial uses of the Santa Ana River downstream of Prado Dam.

(b) Re-Operation. "Re-Operation" means the controlled overdraft of the Basin by the managed withdrawal of groundwater for the Desalters and the potential increase in the cumulative un-replenished Production from 200,000 acre-feet authorized by paragraph 3 below, to 600,000 acre feet for the express purpose of securing and maintaining Hydraulic Control as a component of the Physical Solution.

[1] The increase in the controlled overdraft herein is separate from and in addition to the 200,000 acre-feet of accumulated overdraft authorized in paragraph 3(a) and 3(b) below over the period of 1978 through 2017.

[2] "Desalters" means the Chino I Desalter, the Chino I Expansion, the Chino II Desalter and Future Desalters, consisting of all the capital facilities and processes that remove salt from Basin water, including extraction wells and transmission facilities for delivery of groundwater to the Desalter. Desalter treatment and delivery facilities for the desalted water include pumping and storage facilities and treatment and disposal capacity in the Santa Ana Regional Interceptor.

[3] The groundwater Produced through controlled overdraft pursuant to Re-Operation does not constitute New Yield or Operating Safe Yield and it is made available under the Physical Solution for the express purpose of satisfying some or all of the groundwater Production by the Desalters until December 31, 2030. ("Period of Re-Operation").

[4] The operation of the Desalters, the Production of groundwater for the Desalters and the use of water produced by the Desalters pursuant to Re-Operation are

subject to the limitations that may be set forth in Watermaster Rules and Regulations for the Desalters.

(5) Watermaster will update its Recharge Master Plan and obtain Court approval of its update, to address how the Basin will be contemporaneously managed to secure and maintain Hydraulic Control and operated at a new equilibrium at the conclusion of the period of Re-Operation. The Recharge Master Plan shall contain recharge projections and summaries of the projected water supply availability as well as the physical means to accomplish recharge projections. The Recharge Master Plan may be amended from time to time with Court approval.

(6) Re-Operation and Watermaster's apportionment of controlled overdraft in accordance with the Physical Solution will not be suspended in the event that Hydraulic Control is secured in any year before the full 400,000 acre-feet has been Produced without Replenishment, so long as: (i) Watermaster has prepared, adopted and the Court has approved a contingency plan that establishes conditions and protective measures that will avoid unreasonable and unmitigated material physical harm to a party or to the Basin and that equitably distributes the cost of any mitigation attributable to the identified contingencies; and (ii) Watermaster is in substantial compliance with a Court approved Recharge Master Plan.15

3. Operating Safe Yield. Operating Safe Yield in any year shall consist of the Appropriative Pool's share of Safe Yield of the Basin, plus any controlled overdraft of the Basin which Watermaster may authorize. In adopting the Operating Safe Yield for any year, Watermaster shall be limited as follows:

(a) Accumulated Overdraft. - During the operation of this Judgment and Physical Solution, the overdraft accumulated from and after the effective date of the Physical Solution and

[15] Order dated December 21, 2007.

resulting from an excess of Operating Safe Yield over Safe Yield shall not exceed 200,000 acre feet.

(b) Quantitative Limits. - In no event shall Operating Safe Yield in any year be less than the Appropriative Pool's share of Safe Yield, nor shall it exceed such share of Safe Yield by more than 10,000 acre feet. The initial Operating Safe Yield is hereby set at 54,834 acre feet per year. Operating Safe Yield shall not be changed upon less than five (5) years' notice by Watermaster. Nothing contained in this paragraph shall be deemed to authorize, directly or indirectly, any modification of the allocation of shares in Safe Yield to the overlying pools, as set forth in Paragraph 44 of the Judgment.

4. Ground Water Storage Agreements. Any agreements authorized by Watermaster for storage of supplemental water in the available ground water storage capacity of Chino Basin shall include, but not be limited to:

(a) The quantities and term of the storage right.

(b) A statement of the priority or relation of said right, as against overlying or Safe Yield uses, and other storage rights.

(c) The procedure for establishing delivery rates, schedules and procedures which may include:

[1] spreading or injection, or

[2] in lieu deliveries of supplemental water for direct use.

(d) The procedures for calculation of losses and annual accounting for water in storage by Watermaster.

(e) The procedures for establishment and administration of withdrawal schedules, locations and methods.

//

//

//

//

//

EXHIBIT J – CHINO BASIN IN LIU AREA NO. 1

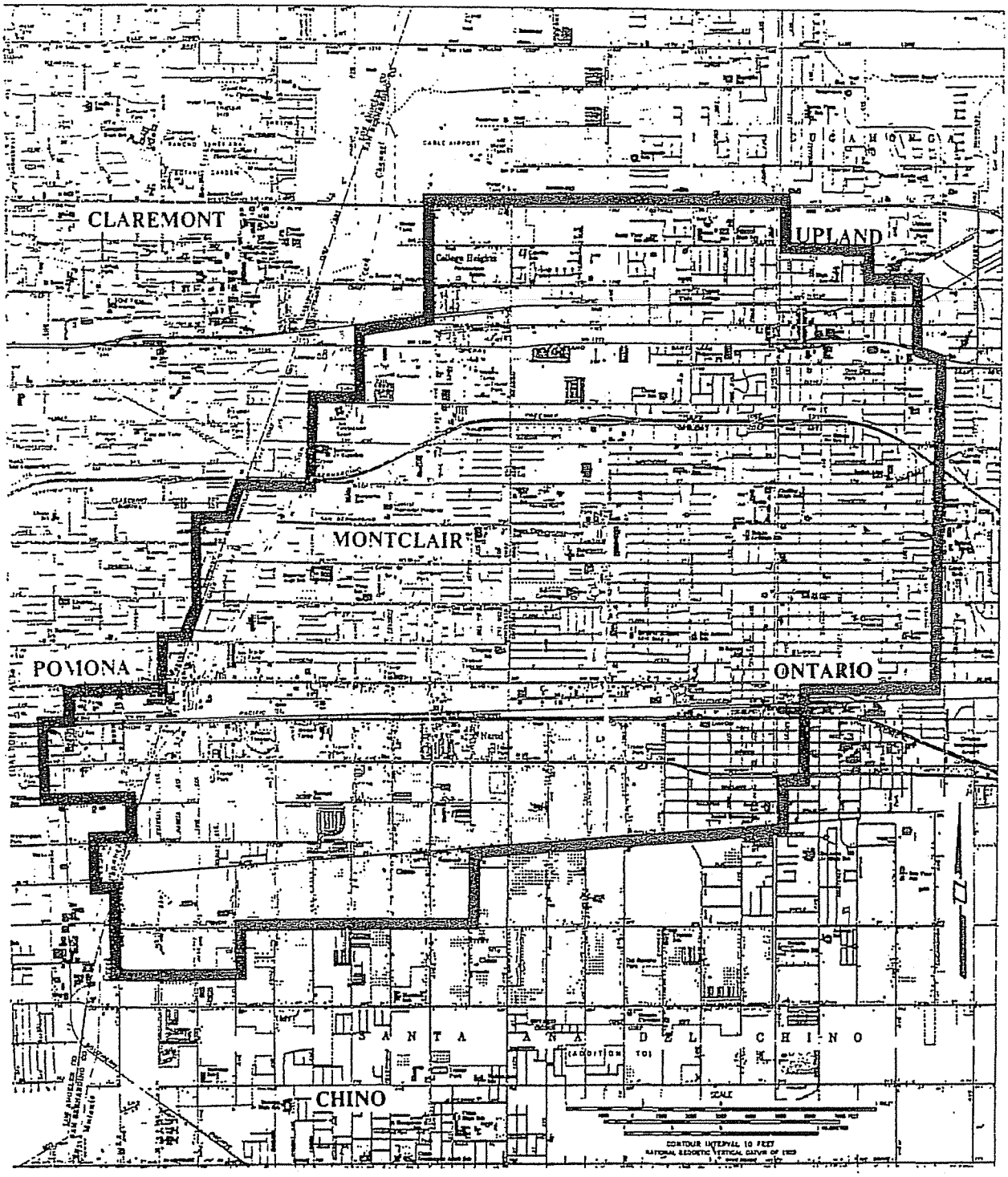

CHINO BASIN

IN LIEU AREA NO. 1

EXHIBIT "J"

EXHIBIT K – LEGAL DESCRIPTION OF CHINO BASIN

EXHIBIT "K"
LEGAL DESCRIPTION

OF CHINO BASIN

Preamble

All of the townships and ranges referred to in the following legal description are the San Bernardino Base and Meridian. Certain designated sections are implied as the System of Government Surveys may be extended where not established. Said sections are identified as follows:

Section 20, T1N, R8W is extended across Rancho Cucamonga;

Section 36, T1N, R8W is extended across the City of Upland;

Sections 2,3, and 4, T1S, R7W are extended across Rancho Cucamonga;

Section 10, T1S, R8W is extended across the City of Claremont;

Sections 19, 20, 21, 30, 31 and 32, T1S, R8W are extended across the City of Pomona;

Sections 4, 5, and 28, T2S, R8W are extended across Rancho Santa Ana Del Chino;

Sections 15 and 16, T3S, R7W are extended across Rancho La Sierra; and

Sections 17 and 20, T3S, R7W are extended across Rancho El Rincon.

Description

Chino Basin is included within portions of the Counties of San Bernardino, Riverside and Los Angeles, State of California, bounded by a continuous line described as follows:

EXHIBIT “K”

BEGINNING at the Southwest corner of Lot 241 as shown on Map of Ontario Colony Lands, recorded in Map Book 11, page 6, Office of the County Recorder of San Bernardino County, said corner being the Point of Beginning;

1. Thence Southeasterly to the Southeast corner of Lot 419 of said Ontario Colony Lands;

2. Thence Southeasterly to a point 1300 feet North of the South line and 1300 feet East of the West line of Section 4, T1S, R7W;

3. Thence Easterly to a point on the East line of Section 4, 1800 feet North of the Southeast corner of said Section 4;

4. Thence Easterly to the Southeast corner of the Southwest quarter of the Northeast quarter of Section 3, T1S, R7W;

5. Thence Northeasterly to a point on the North line of Section 2, T1S, R7W, 1400 feet East of the West line of said Section 2;

6. Thence Northeasterly to the Southwest corner of Section 18, T1N, R6W;

7. Thence Northerly to the Northwest corner of said Section 18;

8. Thence Easterly to the Northeast corner of said Section 18;

9. Thence Northerly to the Northwest corner of the Southwest Quarter of Section 8, T1N, R6W;

10. Thence Easterly to the Northeast corner of said Southwest quarter of said Section 8;

11. Thence Southerly to the Southeast corner of said Southwest Quarter of said Section 8;

12. Thence Easterly to the Northeast corner of Section 17, T1N, R6W;

13. Thence Easterly to the Northeast corner of Section 16, T1N, R6W;

14. Thence Southeasterly to the Northwest corner of the Southeast quarter of Section 15, T1N, R6W;

15. Thence Easterly to the Northeast corner of said Southeast quarter of said Section 15;

16. Thence Southeasterly to the Northwest corner of the Northeast quarter of Section 23, T1N, R6W;

17. Thence Southeasterly to the Northwest corner of Section 25, T1N, R6W;

18. Thence Southeasterly to the Northwest corner of the Northeast quarter of Section 31, T1N, R5W;

19. Thence Southeasterly to the Northeast corner of the Northwest quarter of Section 5, T1S, R5W;

20. Thence Southeasterly to the Southeast corner of Section 4, T1S, R5W;

21. Thence Southeasterly to the Southeast corner of the Southwest quarter of Section 11, T1S, R5W;

22. Thence Southwesterly to the Southwest corner of Section 14, T1S, R5W;

23. Thence Southwest to the Southwest corner of Section 22, T1S, R5W;

24. Thence Southwesterly to the Southwest corner of the Northeast quarter of Section 6, T2S, R5W;

25. Thence Southeasterly to the Northeast corner of Section 18, T2S, R5W;

26. Thence Southwesterly to the Southwest corner of the Southeast quarter of Section 13, T2S, R6W;

27. Thence Southwesterly to the Southwest corner of the Northeast quarter of Section 26, T2S, R6W;

28. Thence Westerly to the Southwest corner of the Northwest quarter of said Section 26;

29. Thence Northerly to the Northwest corner of said Section 26;

30. Thence Westerly to the Southwest corner of Section 21, T2S, R6W;

31. Thence Southerly to the Southeast corner of Section 29, T2S, R6W;

32. Thence Westerly to the Southeast corner of Section 30, T2S, R6W;

33. Thence Southwesterly to the Southwest corner of Section 36, T2S, R7W;

34. Thence Southwesterly to the Southeast corner of Section 3, T3S, R7W;

35. Thence Southwesterly to the Southwest corner of the Northeast quarter of Section 10, T3S, R7W;

36. Thence Southerly to the Northeast corner of the Northwest quarter of Section 15, T3S, R7W;

37. Thence Southwesterly to the Southeast corner of the Northeast quarter of Section 16, T3S, R7W;

38. Thence Southwesterly to the Southwest corner of said Section 16;

39. Thence Southwesterly to the Southwest corner of the Northeast quarter of Section 20, T3S, R7W;

40. Thence Westerly to the Southwest corner of the Northwest quarter of said Section 20;

41. Thence Northerly to the Northwest corner of Section 17, T3S, R7W;

42. Thence Westerly to the Southwest corner of Section 7, T3S, R7W;

43. Thence Northerly to the Southwest corner of Section 6, T3S, R7W;

44. Thence Westerly to the Southwest corner of Section 1, T3S, R8W;

45. Thence Northerly to the Southeast corner of Section 35, T2S, R8W;

46. Thence Northwesterly to the Northwest corner of said Section 35;

47. Thence Northerly to the Southeast corner of Lot 33, as shown on Map of Tract 3193, recorded in Map Book 43, pages 46 and 47, Office of the County Recorder of San Bernardino County;

48. Thence Westerly to the Northwest corner of the Southwest quarter of Section 28, T2S, R8W;

49. Thence Northerly to the Southwest corner of Section 4, T2S, R8W;

50. Thence Westerly to the Southwest corner of Section 5, T2S, R8W;

51. Thence Northerly to the Southwest corner of Section 32, T1S, R8W;

52. Thence Westerly to the Southwest corner of Section 31, T1S, R8W;

53. Thence Northerly to the Southwest corner of Section 30, T1S, R8W;

54. Thence Northeasterly to the Southwest corner of Section 20, T1S, R8W;

55. Thence Northerly to the Northwest corner of the Southwest quarter of the Southwest quarter of said Section 20;

56. Thence Northwesterly to the Northeast corner of the Southeast quarter of the Southeast quarter of the Northwest quarter of Section 19, T1S, R8W;

57. Thence Easterly to the Northwest corner of Section 21, T1S, R8W;

58. Thence Northeasterly to the Southeast corner of the Southwest quarter of the Southwest quarter of Section 10, T1S, R8W;

59. Thence Northeasterly to the Southwest corner of Section 2, T1S, R8W;

60. Thence Northeasterly to the Southeast corner of the Northwest quarter of the Northwest quarter of Section 1, T1S, R8W;

61. Thence Northerly to the Northeast corner of the Northwest quarter of the Northeast quarter of Section 36, T1N, R8W;

62. Thence Northerly to the Southeast corner of Section 24, T1N, R8W;

63. Thence Northeasterly to the Southeast corner of the Northwest quarter of the Northwest quarter of Section 20, T1N, R7W; and

64. Thence Southerly to the Point of Beginning.

Sections Included

Said perimeter description includes all or portions of the following Townships, Ranges and Sections of San Bernardino Base and Meridian:

T1N, R5W - Sections: 30, 31 and 32

T1N, R6W - Sections: 8, 14, 15, 16, 17, 18, 19, 20, 21, 22, 23, 25, 26, 27, 28, 29, 30, 31, 32, 33, 34, 35 and 36

T1N, R7W - Sections: 19, 20, 24, 25, 26, 29, 30, 31, 32, 35 and 36

T1N, R8W - Sections: 25 and 36

T1S, R5W - Sections: 4, 5, 6, 7, 8, 9, 10, 11, 14, 15,16, 17, 18, 19, 20, 21, 22, 28, 29,30, 31 and 32

T1S, R6W - Sections: 1 through 36, inclusive

T1S, R7W - Sections: 1 through 36, inclusive

T1S, R8W - Sections: 1, 2, 10, 11, 12, 13, 14, 15, 16, 19, 20, 21, 22, 23, 24, 25, 26, 27, 28, 29, 30, 31, 32, 33, 34, 35 and 36

T2S, R5W - Sections: 6, 7 and 18

T2S, R6W - Sections: 1, 2, 3, 4, 5, 6, 7, 8, 9, 10, 11, 12, 13, 14, 15, 16, 17, 18, 19, 20, 21, 22, 23, 24, 26, 29, 30 and 31

T2S, R7W - Sections: 1 through 36, inclusive

T2S, R8W - Sections: 1, 2, 3, 4, 5, 9, 10, 11, 12, 13, 14, 15, 16, 21, 22, 23, 24, 25, 26, 27, 28, 35 and 36

T3S, R7W - Sections: 2, 3, 4, 5, 6, 7, 8, 9, 10, 15, 16, 17 and 20

T3S, R8W - Sections: 1.

FIGURE 1

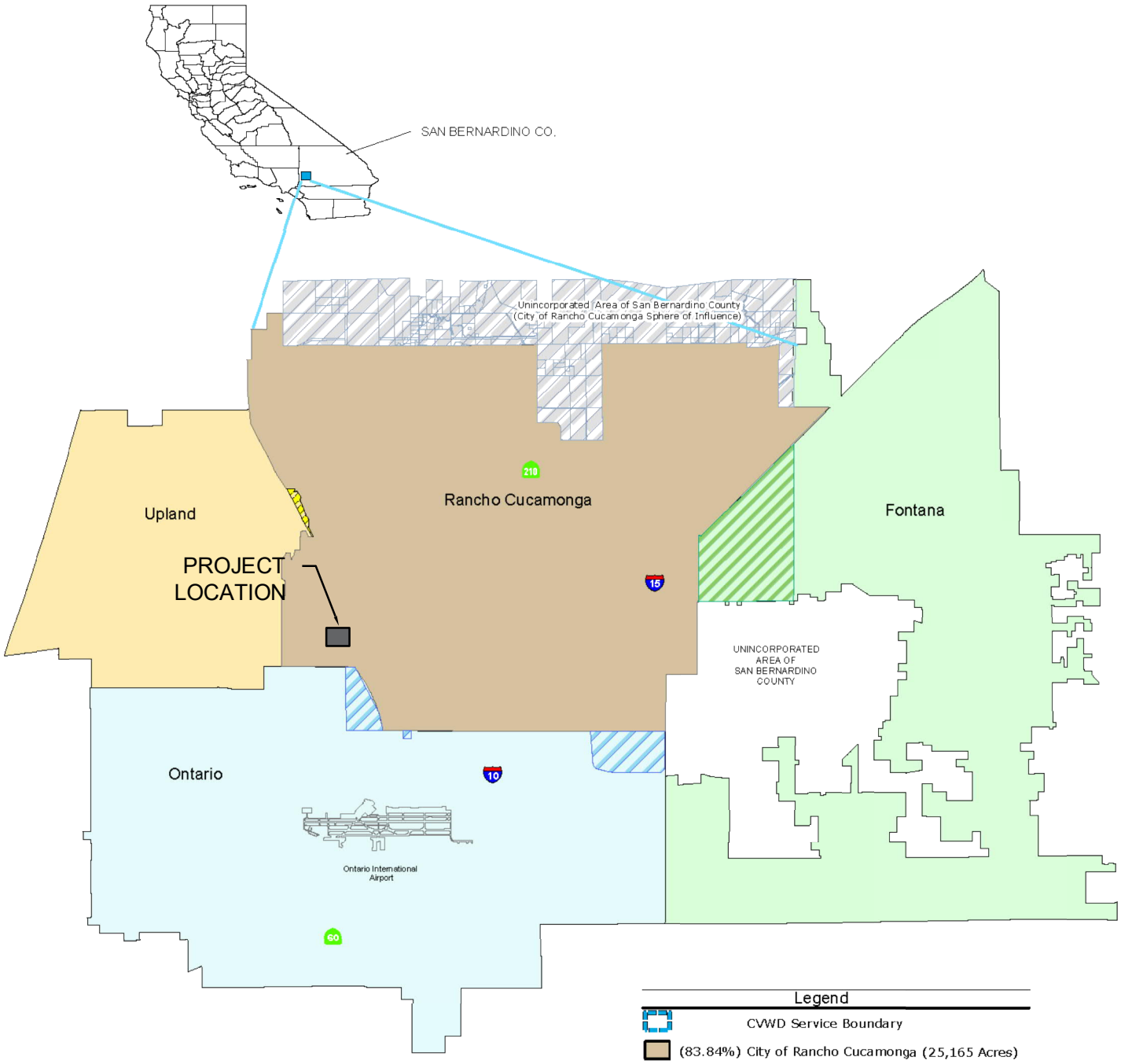

SOURCE: 2015 CUCAMONGA VALLEY WATER DISTRICT URBAN WATER MANAGEMENT PLAN

VALUED
ENGINEERING, INC
600 N. MOUNTAIN AVE, STE C102,
UPLAND, CA 91786
(909) 982-4601

N.T.S.

CVWD SERVICE AREA MAP

File: P:\JOBS\1091901\CAD\EXHIBITS\FIG 1 – SERVICE MAP.dwg Dec 09, 2019 – 6:25pm HWAN

FIGURE 2

SOURCE: HPA ARCHITECTURE, PROJECT # 18411 DATED: 10/29/19

VALUED
ENGINEERING, INC
600 N. MOUNTAIN AVE, STE C102,
UPLAND, CA 91786
(909) 982-4601

N.T.S.

PROJECT LOCATION

File: P:\JOBS\1091901\CAD\EXHIBITS\FIG 2 - PROJECT LOCATION.dwg Dec 09, 2019 - 6:25pm HWAN

FIGURE 3

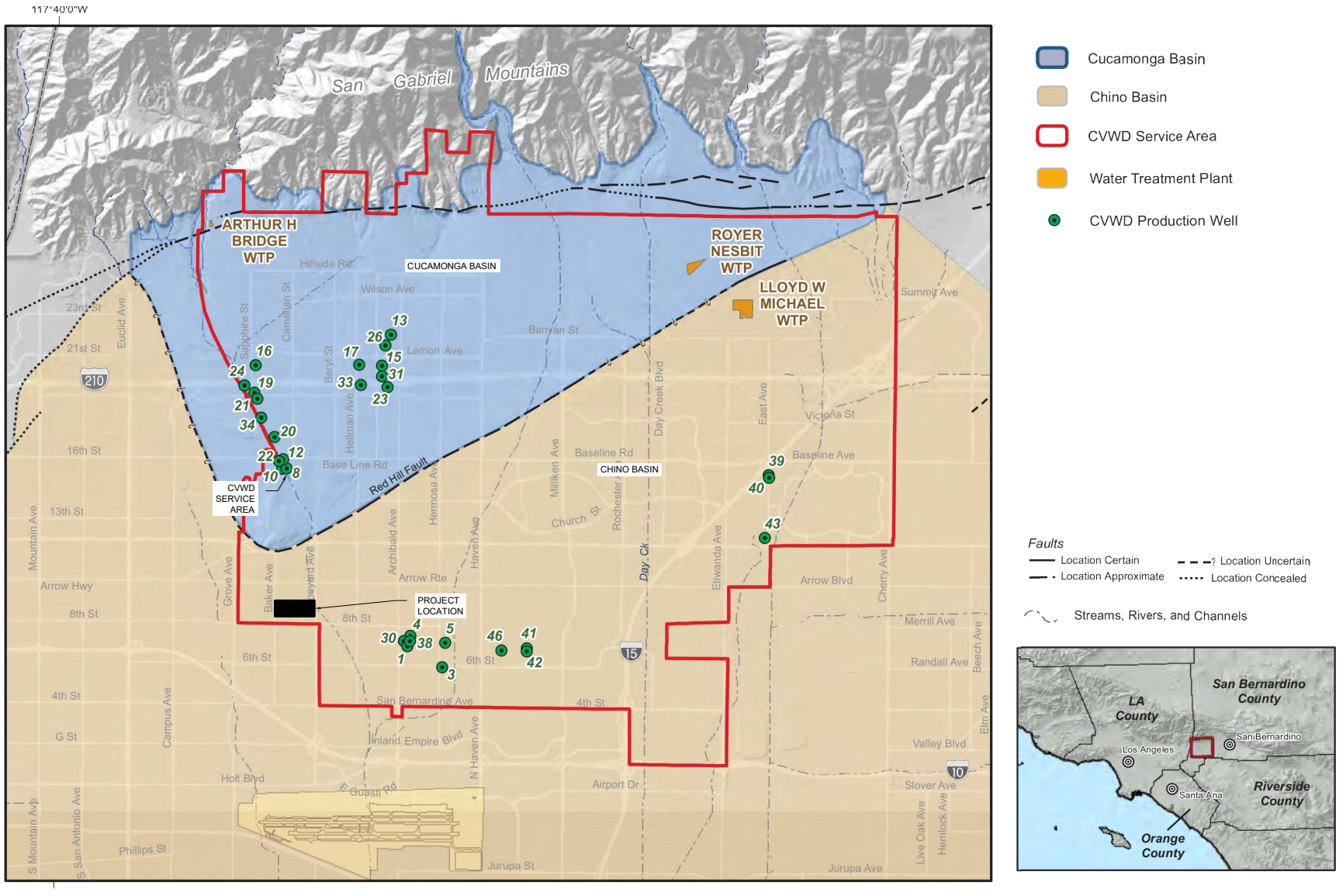

Cucamonga Basin

Chino Basin

CVWD Service Area

Water Treatment Plant

CVWD Production Well

Faults

Location Certain

Location Approximate

Location Uncertain

Location Concealed

Streams, Rivers, and Channels

SOURCE: 2015 CUCAMONGA VALLEY WATER DISTRICT URBAN WATER MANAGEMENT PLAN

VALUED ENGINEERING, INC
600 N. MOUNTAIN AVE, STE C102,
UPLAND, CA 91786
(909) 982-4601

N.T.S.

CVWD SERVICE AREA WITHIN THE CHINO BASIN AND THE CUCAMONGA BASIN

File: P:\JOBS\1091901\CAD\EXHIBITS\FIG 3 – WELL MAP.dwg Dec 09, 2019 – 6:26pm HWAN

Thienes Engineering, Inc.
CIVIL ENGINEERING LAND SURVEYING

Preliminary
Water Quality Management Plan
(PWQMP)

For:

9th & Vineyard
SWC 9th Street and Vineyard Avenue
Rancho Cucamonga, CA 91730
WQMPXXXX-XXXXX

APN: 0207-271-25, -27, -39, -40, -89, -93, -94, -96 and -97

Prepared for:
CP Logistics Vineyard LLC
2442 Dupont Drive
Irvine, CA 92612
Phone: (949) 296-2989
Contact: Michael Sizemore

Prepared by:
Thienes Engineering, Inc.
14349 Firestone Boulevard
La Mirada, CA 90638
Phone: (714) 521-4811
Contact: Luis Prado (luisp@thieneseng.com)
Job No. 3744

Approval Date: _____
Implementation Date: _____

1st Submittal: October 25, 2019
2nd Submittal: _____
3rd Submittal: _____

Project Owner's Certification

This Water Quality Management Plan (WQMP) has been prepared for ***CP Logistics Vineyard LLC*** by ***Thienes Engineering, Inc***. The WQMP is intended to comply with the requirements of the ***City of Rancho Cucamonga*** and the NPDES Areawide Stormwater Program requiring the preparation of a WQMP.

The undersigned, while it owns the subject property, is responsible for the implementation of the provisions of this plan and will ensure that this plan is amended as appropriate to reflect up-to-date conditions on the site consistent with the San Bernardino County's Municipal Storm Water Management Program and the intent of the NPDES Permit for San Bernardino County and the incorporated cities of San Bernardino County within the Santa Ana Region. Once the undersigned transfers its interest in the property, its successors in interest and the city/county shall be notified of the transfer. The new owner will be informed of its responsibility under this WQMP. A copy of the approved WQMP shall be available on the subject site in perpetuity.

"I certify under a penalty of law that the provisions (implementation, operation, maintenance, and fund) of the WQMP have been accepted and that the plan will be transferred to future successors."

Project Data			
Permit/Application Number(s):	DRC-2019-000742	**Grading Permit Number(s):**	PGRXXXX-XXXXX
Tract/Parcel Map Number(s):	PM 20173	**Building Permit Number(s):**	PGRXXXX-XXXXX
CUP, SUP, and/or APN (Specify Lot Numbers if Portions of Tract):			APN: 0207-271-25, -27, -39, -40, -89, -93, -94, -96 and -97

Owner's Signature			
Owner Name: CP Logistics Vineyard LLC			
Title	Vice President		
Contact	William Bullen		
Address	2442 Dupont Drive, Irvine, CA 92612		
Email	MSizemore@panattoni.com		
Telephone #	(949) 296-2989		
Signature	**See Attached Signature Page**	**Date**	

Preparer's Certification

Project Data			
Permit/Application Number(s):	DRC-2019-000742	**Grading Permit Number(s):**	PGRXXXX-XXXXX
Tract/Parcel Map Number(s):	PM 20173	**Building Permit Number(s):**	PGRXXXX-XXXXX
CUP, SUP, and/or APN (Specify Lot Numbers if Portions of Tract):			APN: 0207-271-25, -27, -39, -40, -89, -93, -94, -96 and -97

"The selection, sizing and design of stormwater treatment and other stormwater quality and quantity control measures in this plan were prepared under my oversight and meet the requirements of Regional Water Quality Control Board Order No. R8-2010-0036."

Engineer: Reinhard Stenzel		**PE Stamp Below**
Title	Director of Engineering	
Company	Thienes Engineering, Inc.	
Address	14349 Firestone Boulevard, La Mirada, CA 90638	
Email	reinhard@thieneseng.com	
Telephone #	(714) 521-4811	
Signature		
Date	10/25/2019	

Contents

Section 1 Discretionary Permit(s) 1-1
Section 2 Project Description 2-1
2.1 Project Information 2-1
2.2 Property Ownership/Management 2-2
2.3 Potential Stormwater Pollutants 2-2
2.4 Water Quality Credits 2-3
Section 3 Site and Watershed Description 3-1
Section 4 Best Management Practices (BMP) 4-1
4.1 Source Control BMP 4-1
4.1.1 Pollution Prevention 4-1
4.1.2 Preventive LID Site Design Practices 4-6
4.2 Project Performance Criteria 4-7
4.3 Project Conformance Analysis 4-14
4.3.1 Site Design Hydrologic Source Control BMP 4-16
4.3.2 Infiltration BMPs 4-18
4.3.3 Harvest and Use BMP 4-23
4.3.4 Biotreatment BMP 4-24
4.3.5 Conformance Summary 4-28
4.3.6 Hydromodification Control BMP 4-32
4.4 Alternative Compliance Plan (if applicable) 4-33
Section 5 Inspection and Maintenance Responsibility for Post Construction BMP 5-1
Section 6 WQMP Attachments 6-1
6.1 Site Plan and Drainage Plan 6-1
6.2 Electronic Data Submittal 6-1
6.3 Post Construction 6-1
6.4 Other Supporting Documentation 6-1

Forms

Form 1-1 Project Information 1-1
Form 2.1-1 Description of Proposed Project 2-1
Form 2.2-1 Property Ownership/Management 2-2
Form 2.3-1 Pollutants of Concern 2-2
Form 2.4-1 Water Quality Credits 2-3
Form 3-1 Site Location and Hydrologic Features 3-1
Form 3-2 Existing Hydrologic Characteristics for Drainage Area (DA) 3-2
Form 3-3 Watershed Description 3-3
Form 4.1-1 Non-Structural Source Control BMPs 4-2
Form 4.1-2 Structural Source Control BMPs 4-4
Form 4.1-3 Preventive LID Site Design Practices Checklist 4-6
Form 4.2-1 LID BMP Performance Criteria for Design Capture Volume (DA 1) 4-7
Form 4.2-1 LID BMP Performance Criteria for Design Capture Volume (DA 2) 4-8
Form 4.2-1 LID BMP Performance Criteria for Design Capture Volume (DA 3) 4-8
Form 4.2-1 LID BMP Performance Criteria for Design Capture Volume (DA 4) 4-9
Form 4.2-2 Summary of HCOC Assessment 4-10
Form 4.2-3 HCOC Assessment for Runoff Volume (DA 1) 4-11
Form 4.2-4 HCOC Assessment for Time of Concentration (DA 1) 4-12
Form 4.2-5 HCOC Assessment for Peak Runoff (DA 1) 4-13
Form 4.3-1 Infiltration BMP Feasibility (DA 1) 4-15
Form 4.3-2 Site Design Hydrologic Source Control BMPs (DA 1) 4-16
Form 4.3-3 Infiltration LID BMP – including underground BMPs (DA 1) 4-19
Form 4.3-3 Infiltration LID BMP – including underground BMPs (DA 2) 4-20
Form 4.3-3 Infiltration LID BMP – including underground BMPs (DA 3) 4-21
Form 4.3-3 Infiltration LID BMP – including underground BMPs (DA 4) 4-22
Form 4.3-4 Harvest and Use BMPs (DA 1) 4-23
Form 4.3-5 Selection and Evaluation of Biotreatment BMP (DA 1) 4-24
Form 4.3-6 Volume Based Biotreatment (DA 1) Bioretention and Planter Boxes with Underdrains 4-25
Form 4.3-7 Volume Based Biotreatment (DA 1) Constructed Wetlands and Extended Detention 4-26
Form 4.3-8 Flow Based Biotreatment (DA 1) 4-27
Form 4.3-9 Conformance Summary and Alternative Compliance Volume Estimate (DA 1) 4-28
Form 4.3-9 Conformance Summary and Alternative Compliance Volume Estimate (DA 2) 4-29
Form 4.3-9 Conformance Summary and Alternative Compliance Volume Estimate (DA 3) 4-30
Form 4.3-9 Conformance Summary and Alternative Compliance Volume Estimate (DA 4) 4-31
Form 4.3-10 Hydromodification Control BMPs (DA 1) 4-32
Form 5-1 BMP Inspection and Maintenance 5-1

Attachments

Attachment A: Existing Condition Site Photos
Attachment B: BMP Design Calculations & Supporting Documentation
Attachment C: Site and Drainage Plan
Attachment D: Memorandum of Agreement of Storm Water Quality Management Plan
Attachment E: Educational Materials
Attachment F: Soil/Infiltration Report
Attachment G: BMP Maintenance Material
Attachment H: Conditions of Approval
Attachment I: Class V Injection Well Registration
Attachment J: Activity Restrictions

Section 1 Discretionary Permit(s)

Form 1-1 Project Information					
Project Name	9th & Vineyard				
Project Owner Contact Name:	Michael Sizemore				
Mailing Address:	2442 Dupont Drive Irvine, CA 92612	**E-mail Address:**	MSizemore@panattoni.com	**Telephone:**	(949) 296-2989
Permit/Application Number(s):	DRC-2019-000742 PGRXXXX-XXXXX WQMPXXXX-XXXXX		**Tract/Parcel Map Number(s):**	PM 20173	
Additional Information/ Comments:	n/a				
Description of Project:	The project site encompasses approximately 47.78 acres which includes 0.83 acres of offsite improvements. Proposed improvements to the site include three light industrial warehouses of 130,531 square feet, 270,356 square feet and 636,580 square feet. Truck yards will be located on the easterly side of Building 3, southerly side of Building 2 and northerly and southerly sides of Building 1. Vehicle parking will be located along the perimeters of the site and between the buildings. The remainder of this site is reserved for landscaping. The northerly and easterly portions of Building 3, the northerly drive aisle and easterly truck yard drain to catch basins in the truck yard. Runoff from this portion of the Building 3 site is then conveyed southerly via a proposed storm drain lateral, which also accepts runoff from the north-westerly offsite residential lots (that do not receive treatment). The proposed lateral drains to the 66”-78” master plan storm drain. The westerly and southerly portions of Building 3, the westerly parking lot and southerly drive aisle drain to catch basins in the drive aisle. Runoff from this portion of the Building 3 site is then conveyed northerly via another proposed storm drain lateral to the 66”-78” master plan storm drain. Prior to runoff discharging to the 66”-78” master plan storm drain, the low flows from the Building 3 site will be directed to a set of underground chambers for infiltration (STC #1). Continuing east, the 66”-78” master plan storm drain also accepts Building 2 site runoffs. Specifically, runoff from Building 2’s westerly parking lot drains to a catch basin in the parking lot, then continues southerly via a proposed storm drain lateral to the 66”-78” master plan storm drain. Runoff from Building 2, its northerly drive aisle, easterly parking lot and southerly truck yard drain to a catch basin in the easterly parking lot, then continues northerly via a proposed storm drain lateral to the 66”-78” master plan storm drain. Runoff from Building 1’s westerly drive aisle is also tributary to the 66”-78” master plan storm drain via a catch basin and a storm drain lateral draining south. Prior to runoff discharging to the 66”-78” master plan storm drain, the low flows from the Building 2 site (including a small portion of the Building 1 site) will be directed to another set of underground chambers for infiltration (STC #2). Continuing further into the Building 1 site, the 66”-78” master plan storm drain receives runoff from the south half of Building 1 and the southerly truck yard via catch basins and a proposed storm drain lateral draining north. The 66”-78” master plan storm drain then drains easterly and collects the remainder of Building 1 site runoffs prior to leaving the site. In particular, the north half of Building 1, its northerly truck yard and easterly drive aisle drain to catch basins in the truck yard and drive aisle, then a proposed lateral draining southerly. Building 1’s south-easterly parking lot drains to a catch basin, then drain north via a proposed lateral. Prior to runoff discharging to the 66”-78” master plan storm drain, the low flows from the Building 1 site will be directed to two sets of underground chambers for infiltration; one set located in the northerly truck yard (STC #3) and the other set located in the southerly truck yard (STC #4).				

	Approximately 0.35 acres from the easterly landscaped area fronting Vineyard Avenue will sheet flow offsite. This area is considered self-retaining; it will not be routed to the underground chambers for treatment. Lastly, the project site will utilize the maximum extent practicable (MEP) principle in order to treat disturbed Public Right-of-Way (ROW) impervious areas onsite. This area is approximately 0.83 acres and is included along with the onsite design capture volume (DCV) for STC #4.
Provide summary of Conceptual WQMP conditions (if previously submitted and approved). Attach complete copy.	Pending

Section 2 Project Description

2.1 Project Information

This section of the WQMP should provide the information listed below. The information provided for Conceptual/ Preliminary WQMP should give sufficient detail to identify the major proposed site design and LID BMPs and other anticipated water quality features that impact site planning. Final Project WQMP must specifically identify all BMP incorporated into the final site design and provide other detailed information as described herein.

The purpose of this information is to help determine the applicable development category, pollutants of concern, watershed description, and long term maintenance responsibilities for the project, and any applicable water quality credits. This information will be used in conjunction with the information in Section 3, Site Description, to establish the performance criteria and to select the LID BMP or other BMP for the project or other alternative programs that the project will participate in, which are described in Section 4.

Form 2.1-1 Description of Proposed Project

[1] Development Category (Select all that apply):

☒ Significant re-development involving the addition or replacement of 5,000 ft^2 or more of impervious surface on an already developed site	☐ New development involving the creation of 10,000 ft^2 or more of impervious surface collectively over entire site	☐ Automotive repair shops with standard industrial classification (SIC) codes 5013, 5014, 5541, 7532- 7534, 7536-7539	☐ Restaurants (with SIC code 5812) where the land area of development is 5,000 ft^2 or more
☐ Hillside developments of 5,000 ft^2 or more which are located on areas with known erosive soil conditions or where the natural slope is 25 percent or more	☐ Developments of 2,500 ft^2 of impervious surface or more adjacent to (within 200 ft) or discharging directly into environmentally sensitive areas or waterbodies listed on the CWA Section 303(d) list of impaired waters.	☒ Parking lots of 5,000 ft^2 or more exposed to storm water	☐ Retail gasoline outlets that are either 5,000 ft^2 or more, or have a projected average daily traffic of 100 or more vehicles per day

☐ Non-Priority / Non-Category Project

May require source control LID BMPs and other LIP requirements. Please consult with local jurisdiction on specific requirements.

[2] Project Area (ft^2):	2,081,297 sq-ft 47.78 acres*	**[3] Number of Dwelling Units:**	n/a	**[4] SIC Code:**	4225

[5] Is Project going to be phased? ☐Yes ☒No

If yes, ensure that the WQMP evaluates each phase as a distinct DA, requiring LID BMPs to address runoff at time of completion.

[6] Does Project include roads? ☐Yes ☒No

If yes, ensure that applicable requirements for transportation projects are addressed (see Appendix A of TGD for WQMP)

*This includes 0.83 acres of public ROW improvements.

2.2 Property Ownership/Management

Describe the ownership/management of all portions of the project and site. State whether any infrastructure will transfer to public agencies (City, County, Caltrans, etc.) after project completion. State if a homeowners or property owners association will be formed and be responsible for the long-term maintenance of project stormwater facilities. Describe any lot-level stormwater features that will be the responsibility of individual property owners.

Form 2.2-1 Property Ownership/Management

Describe property ownership/management responsible for long-term maintenance of WQMP stormwater facilities:
CP Logistics Vineyard LLC 2442 Dupont Drive Irvine, CA 92612 Phone: (949) 296-2989 Contact: Michael Sizemore No infrastructure will be transferred to a public agency after project completion. A property owner's association (POA) will be formed for long-term maintenance of project stormwater facilities.

2.3 Potential Stormwater Pollutants

Determine and describe expected stormwater pollutants of concern based on land uses and site activities (refer to Table 3-3 in the TGD for WQMP).

Form 2.3-1 Pollutants of Concern

Pollutant	Please check: E=Expected, N=Not Expected		Additional Information and Comments
Pathogens (Bacterial / Virus)	E ☒	N ☐	Including petroleum hydrocarbons. Bacterial indicators are routinely detected in pavement runoff.
Nutrients - Phosphorous	E ☒	N ☐	Expected pollutant if landscaping exists on-site.
Nutrients - Nitrogen	E ☒	N ☐	Expected pollutant if landscaping exists on-site.
Noxious Aquatic Plants	E ☒	N ☐	Expected pollutant if landscaping exists on-site.
Sediment / TSS / pH	E ☒	N ☐	Expected pollutant if landscaping exists on-site.
Metals	E ☒	N ☐	Expected pollutant if parking lots exist on-site.
Oil and Grease	E ☒	N ☐	Expected pollutant if parking lots exist on-site.
Trash & Debris	E ☒	N ☐	Expected pollutant if landscaping and parking lots exists on-site.
Pesticides / Herbicides	E ☒	N ☐	Expected pollutant if landscaping exists on-site.
Organic Compounds	E ☒	N ☐	Expected pollutant if landscaping exists on-site. Including solvents. Bacterial indicators are routinely detected in pavement runoff.
Oxygen Demanding Compounds	E ☐	N ☐	Expected pollutant if landscaping exists on-site.
Other:	E ☐	N ☐	
Other:	E ☐	N ☐	

The expected POCs for the project site are ***Pathogens, Nutrients, and Metals***.

2.4 Water Quality Credits

A water quality credit program is applicable for certain types of development projects if it is not feasible to meet the requirements for on-site LID. Proponents for eligible projects, as described below, can apply for water quality credits that would reduce project obligations for selecting and sizing other treatment BMP or participating in other alternative compliance programs. Refer to Section 6.2 in the TGD for WQMP to determine if water quality credits are applicable for the project.

Form 2.4-1 Water Quality Credits

[1] **Project Types that Qualify for Water Quality Credits:** *Select all that apply*			
☐ Redevelopment projects that reduce the overall impervious footprint of the project site. [Credit = % impervious reduced]	Higher density development projects ☐ Vertical density [20%] ☐ 7 units/ acre [5%]	☐ Mixed use development, (combination of residential, commercial, industrial, office, institutional, or other land uses which incorporate design principles that demonstrate environmental benefits not realized through single use projects) [20%]	☐ Brownfield redevelopment (redevelop real property complicated by presence or potential of hazardous contaminants) [25%]
☐ Redevelopment projects in established historic district, historic preservation area, or similar significant core city center areas [10%]	☐ Transit-oriented developments (mixed use residential or commercial area designed to maximize access to public transportation) [20%]	☐ In-fill projects (conversion of empty lots & other underused spaces < 5 acres, substantially surrounded by urban land uses, into more beneficially used spaces, such as residential or commercial areas) [10%]	☐ Live-Work developments (variety of developments designed to support residential and vocational needs) [20%]
[2] **Total Credit %:** n/a *(Total all credit percentages up to a maximum allowable credit of 50 percent)*			
Description of Water Quality Credit Eligibility (if applicable)	n/a		

The proposed project will ***not*** utilize any water quality credits.

Section 3 Site and Watershed Description

Describe the project site conditions that will facilitate the selection of BMP through an analysis of the physical conditions and limitations of the site and its receiving waters. Identify distinct drainage areas (DA) that collect flow from a portion of the site and describe how runoff from each DA (and sub-watershed DMAs) is conveyed to the site outlet(s). Refer to Section 3.2 in the TGD for WQMP. Complete form 3.2 for each DA on the project site.

Form 3-1 Site Location and Hydrologic Features

Site coordinates *Take GPS measurement at approximate center of site*	**Latitude:** 34.093781	**Longitude:** -117.61539	**Thomas Bros Map page:** Page 602

[1] San Bernardino County climatic region: ☒Valley ☐Mountain ☐Desert

[2] Does the site have more than one drainage area (DA): ☒Yes ☐No

If no, proceed to Form 3-2. If yes, then use this form to show a conceptual schematic describing DMAs and hydrologic feature connecting DMAs to the site outlet(s). An example is provided below that can be modified for proposed project or a drawing clearly showing DMA and flow routing may be attached.

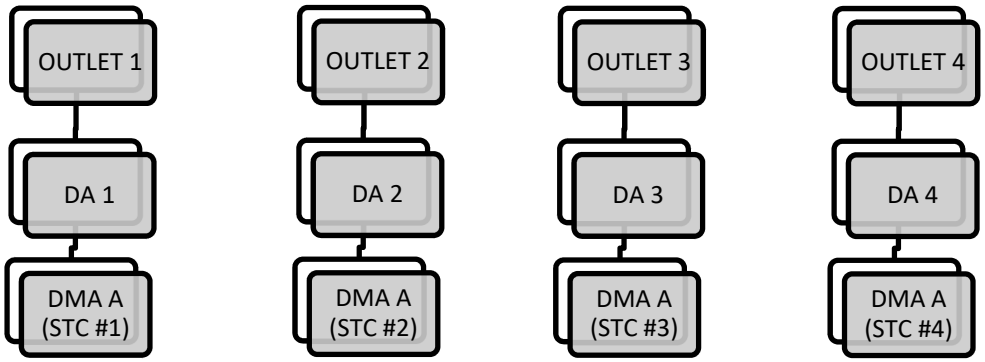

Conveyance	*Briefly describe on-site drainage features to convey runoff that is not retained within a DMA*
DA 1 DMA A flows to Outlet 1	Prior to runoff discharging to the 66”-78” master plan storm drain, the low flows from the Building 3 site will be directed to a set of underground chambers for infiltration (STC #1).
DA 2 DMA A flows to Outlet 2	Prior to runoff discharging to the 66”-78” master plan storm drain, the low flows from the Building 2 site (including a small portion of the Building 1 site) will be directed to another set of underground chambers for infiltration (STC #2).
DA 3 DMA A flows to Outlet 3	Prior to runoff discharging to the 66”-78” master plan storm drain, the low flows from the northerly portion of the Building 1 site will be directed to a set of underground chambers for infiltration (STC #3).
DA 4 DMA A flows to Outlet 4	Prior to runoff discharging to the 66”-78” master plan storm drain, the low flows from the southerly portion of the Building 1 site will be directed to a set of underground chambers for infiltration (STC #4).

Form 3-2 Existing Hydrologic Characteristics for Drainage Area (DA)

For each drainage area's sub-watershed DMA, provide the following characteristics	DMA A Hydrology Nodes (100-103)	DMA B Hydrology Nodes (110-112)	DMA C Hydrology Nodes (120-121)	DMA D Hydrology Nodes (130-132)
[1] **DMA drainage area (ft^2)**	725,274 (16.65 ac)	581,526 (13.35 ac)	304,920 (7.00 ac)	433,422 (9.95 ac)
[2] **Existing site impervious area (ft^2)**	133,966	58,185	87,513	7,159
[3] **Antecedent moisture condition** *For desert areas, use http://www.sbcounty.gov/dpw/floodcontrol/pdf/20100412_map.pdf*	AMC II	AMC II	AMC II	AMC II
[4] **Hydrologic soil group** *Refer to Watershed Mapping Tool – http://sbcounty.permitrack.com/WAP*	HSG A	HSG A	HSG A	HSG A
[5] **Longest flowpath length (ft)**	1,270	1,255	944	944
[6] **Longest flowpath slope (ft/ft)**	0.022	0.0195	0.0149	0.020
[7] **Current land cover type(s)** *Select from Fig C-3 of Hydrology Manual*	Barren Commercial	Barren Commercial	Barren Commercial	Barren
[8] **Pre-developed pervious area condition:** *Based on the extent of wet season vegetated cover good >75%; Fair 50-75%; Poor <50% See Attachment A for photos of site to support rating*	Poor and Paved	Poor and Paved	Poor and Paved	Poor

Hydrology map available in Attachment C. Does not include 0.83 acres of disturbed ROW improvements.

Form 3-3 Watershed Description

Receiving Waters *Refer to Watershed Mapping Tool - http://sbcounty.permitrack.com/WAP* *See 'Drainage Facilities" link at this website*	Cucamonga Creek, Reach 1 Mill Creek (Prado Area) Chino Creek, Reach 1A Santa Ana River, Reach 3 Prado Dam Santa Ana River, Reach 2 Santa Ana River, Reach 1 Pacific Ocean
Applicable TMDLs *Refer to Local Implementation Plan*	Cucamonga Creek, Reach 1: High Coliform Count Mill Creek (Prado Area): Pathogens Chino Creek, Reach 1A: Pathogens Santa Ana River, Reach 3: Pathogens and Nitrate Prado Dam: Pathogens Santa Ana River, Reach 2: None Santa Ana River, Reach 1: None Pacific Ocean: None
303(d) listed impairments *Refer to Local Implementation Plan and Watershed Mapping Tool – http://sbcounty.permitrack.com/WAP and State Water Resources Control Board website – http://www.waterboards.ca.gov/santaana/water_iss ues/programs/tmdl/index.shtml*	Cucamonga Creek, Reach 1: Cadmium, Copper, Lead, and Zinc Mill Creek (Prado Area): Indicator Bacteria, Nutrients and Total Suspended Solids (TSS) Chino Creek, Reach 1A: Indicator Bacteria, and Nutrients Santa Ana River, Reach 3: Copper, Indicator Bacteria and Lead Prado Dam: pH Santa Ana River, Reach 2: None Santa Ana River, Reach 1: None Pacific Ocean: None
Environmentally Sensitive Areas (ESA) *Refer to Watershed Mapping Tool – http://sbcounty.permitrack.com/WAP*	n/a
Unlined Downstream Water Bodies *Refer to Watershed Mapping Tool – http://sbcounty.permitrack.com/WAP*	Santa Ana River
Hydrologic Conditions of Concern	☐ Yes *Complete Hydrologic Conditions of Concern (HCOC) Assessment. Include Forms 4.2-2 through Form 4.2-5 and Hydromodification BMP Form 4.3-10 in submittal* ☒ No
Watershed–based BMP included in a RWQCB approved WAP	☐ Yes *Attach verification of regional BMP evaluation criteria in WAP* • *More Effective than On-site LID* • *Remaining Capacity for Project DCV* • *Upstream of any Water of the US* • *Operational at Project Completion* • *Long-Term Maintenance Plan* ☒ No

Section 4 Best Management Practices (BMP)

4.1 Source Control BMP

4.1.1 Pollution Prevention

Non-structural and structural source control BMP are required to be incorporated into all new development and significant redevelopment projects. Form 4.1-1 and 4.1-2 are used to describe specific source control BMPs used in the WQMP or to explain why a certain BMP is not applicable. Table 7-3 of the TGD for WQMP provides a list of applicable source control BMP for projects with specific types of potential pollutant sources or activities. The source control BMP in this table must be implemented for projects with these specific types of potential pollutant sources or activities.

The preparers of this WQMP have reviewed the source control BMP requirements for new development and significant redevelopment projects. The preparers have also reviewed the specific BMP required for project as specified in Forms 4.1-1 and 4.1-2. All applicable non-structural and structural source control BMP shall be implemented in the project.

Form 4.1-1 Non-Structural Source Control BMPs

Identifier	Name	Check One		Describe BMP Implementation OR, if not applicable, state reason
		Included	Not Applicable	
N1	Education of Property Owners, Tenants and Occupants on Stormwater BMPs	☒	☐	Property owner will familiarize him/herself with the educational materials in Attachment "E" and the contents of the WQMP.
N2	Activity Restrictions	☒	☐	Activities are restricted to only those for which a BMP has been implemented. The owner shall develop ongoing activity restrictions that include those that have the potential to create adverse impacts on water quality. Activities include, but are not limited to: handling and disposal of contaminants, fertilizer and pesticide application restrictions, litter control and pick-up, and vehicle or equipment repair as well as any other activities that may potentially contribute to water pollution. Refer to Attachment J.
N3	Landscape Management BMPs	☒	☐	Irrigation must be consistent with City's Water Conservation Ordinance. Fertilizer and pesticide usage will be consistent with County Management Guidelines for Use of Fertilizers and Pesticides.
N4	BMP Maintenance	☒	☐	BMP maintenance, implementation schedules, and responsible parties are included with each specific BMP narrative.
N5	Title 22 CCR Compliance (How development will comply)	☐	☒	No hazardous wastes onsite.
N6	Local Water Quality Ordinances	☒	☐	Owner/tenant will comply with Local Water Ordinances.
N7	Spill Contingency Plan	☒	☐	Owner/tenant will have a spill contingency plan, a separate document, based on specific site needs.
N8	Underground Storage Tank Compliance	☐	☒	No USTs onsite.
N9	Hazardous Materials Disclosure Compliance	☐	☒	No hazardous materials onsite.
N10	Uniform Fire Code Implementation	☒	☐	If applicable, owner will comply with Article 80 of the California Fire Code enforced by the fire protection agency. The facility operators will be educated annually regarding requirements for handling, storage and proper disposal of hazardous substances.
N11	Litter/Debris Control Program	☒	☐	Contract with their landscape maintenance firm to provide this service during regularly schedule maintenance. They are required to implement trash management and litter control procedures in the common areas aimed at reducing pollution of drainage water.
N12	Employee Training	☒	☐	The owner will ensure that tenants are also familiar with onsite BMPs and necessary maintenance required of the tenants. Owner will check with City and County at least once a year to obtain new or updated educational materials and provide these materials to tenants. Employees shall be trained to clean up spills and participate in ongoing maintenance. The WQMP requires annual employee training and new hires within 2 months.

Form 4.1-1 Non-Structural Source Control BMPs

Identifier	Name	Check One		Describe BMP Implementation OR, if not applicable, state reason
		Included	Not Applicable	
N13	Housekeeping of Loading Docks	☒	☐	Keep all fluids indoors. Clean up spills immediately and keep spills from entering storm drain system. No direct discharges into the storm drain system. Area shall be inspected weekly for proper containment and practices with spills cleaned up immediately and disposed of properly.
N14	Catch Basin Inspection Program	☒	☐	Monthly inspection by property owner's designee. Inspection consists of immediate repair of any deterioration of the structures and maintenance of drain inserts before and after major rain events. Drain insert maintenance shall be per manufacturer's guidelines.
N15	Vacuum Sweeping of Private Streets and Parking Lots	☒	☐	All landscape maintenance contractors will be required to sweep up all landscape cuttings, mowings and fertilizer materials off paved areas weekly and dispose of properly. Parking areas and drive ways will be swept monthly by sweeping contractor.
N16	Other Non-structural Measures for Public Agency Projects	☐	☒	Not a public agency project.
N17	Comply with all other applicable NDPES permits	☒	☐	Will comply with Construction General Permit and Industrial General Permit (may apply for No Exposure Certification/NEC).

Form 4.1-2 Structural Source Control BMPs

Identifier	Name	Check One		Describe BMP Implementation OR, if not applicable, state reason
		Included	Not Applicable	
S1	Provide storm drain system stenciling and signage (CASQA New Development BMP Handbook SD-13)	☒	☐	"No Dumping – Drains to Waterway" stencils will be applied. Legibility of stencil will be maintained on a yearly basis.
S2	Design and construct outdoor material storage areas to reduce pollution introduction (CASQA New Development BMP Handbook SD-34)	☐	☒	No outdoor material storage areas onsite.
S3	Design and construct trash and waste storage areas to reduce pollution introduction (CASQA New Development BMP Handbook SD-32)	☒	☐	Paved with an impervious surface, designed not to allow run-on from adjoining areas, designed to divert drainage from adjoining roofs and pavements diverted around the area, screened or walled to prevent off-site transport of trash. A trash enclosure detail is provided within the Site and Drainage Map.
S4	Use efficient irrigation systems & landscape design, water conservation, smart controllers, and source control (Statewide Model Landscape Ordinance; CASQA New Development BMP Handbook SD-12)	☒	☐	Irrigation systems shall include reducers or shutoff valves triggered by a pressure drop to control water loss in the event of broken sprinkler heads or lines. Timers will be used to avoid over watering and watering cycles and duration shall be adjusted seasonally by the landscape maintenance contractor. The landscaping areas will be grouped with plants that have similar water requirements. Native or drought tolerant species shall also be used where appropriate to reduce excess irrigation runoff and promote surface filtration.
S5	Finish grade of landscaped areas at a minimum of 1-2 inches below top of curb, sidewalk, or pavement	☐	☒	Stormwater runoff from all areas will drain into the proposed infiltration facilities for treatment.
S6	Protect slopes and channels and provide energy dissipation (CASQA New Development BMP Handbook SD-10)	☐	☒	No channels to protect.
S7	Covered dock areas (CASQA New Development BMP Handbook SD-31)	☐	☒	No applicable.
S8	Covered maintenance bays with spill containment plans (CASQA New Development BMP Handbook SD-31)	☐	☒	No maintenance bays onsite.
S9	Vehicle wash areas with spill containment plans (CASQA New Development BMP Handbook SD-33)	☐	☒	No vehicle wash areas onsite.
S10	Covered outdoor processing areas (CASQA New Development BMP Handbook SD-36)	☐	☒	No outdoor processing areas onsite.

Form 4.1-2 Structural Source Control BMPs

Identifier	Name	Check One		Describe BMP Implementation OR, if not applicable, state reason
		Included	Not Applicable	
S11	Equipment wash areas with spill containment plans (CASQA New Development BMP Handbook SD-33)	☐	☒	No equipment wash areas onsite.
S12	Fueling areas (CASQA New Development BMP Handbook SD-30)	☐	☒	No fueling areas onsite.
S13	Hillside landscaping (CASQA New Development BMP Handbook SD-10)	☐	☒	No hillsides onsite.
S14	Wash water control for food preparation areas	☐	☒	No food preparation onsite.
S15	Community car wash racks (CASQA New Development BMP Handbook SD-33)	☐	☒	No community cars wash racks onsite.

4.1.2 Preventive LID Site Design Practices

Site design practices associated with new LID requirements in the MS4 Permit should be considered in the earliest phases of a project. Preventative site design practices can result in smaller DCV for LID BMP and hydromodification control BMP by reducing runoff generation. Describe site design and drainage plan including:

- A narrative of site design practices utilized or rationale for not using practices
- A narrative of how site plan incorporates preventive site design practices
- Include an attached Site Plan layout which shows how preventative site design practices are included in WQMP

Refer to Section 5.2 of the TGD for WQMP for more details.

Form 4.1-3 Preventive LID Site Design Practices Checklist

Site Design Practices *If yes, explain how preventative site design practice is addressed in project site plan. If no, other LID BMPs must be selected to meet targets.*
Minimize impervious areas: ☐ Yes ☒ No Explanation: The project will utilize belowground infiltration facilities to collect runoff from impervious areas. Roads and sidewalk widths are reduced to the City standards.
Maximize natural infiltration capacity: ☒ Yes ☐ No Explanation: The infiltration facilities are positioned in downstream and highly permeable areas that will maximize the amount of stormwater collected for treatment.
Preserve existing drainage patterns and time of concentration: ☒ Yes ☐ No Explanation: Post-development drainage patterns will mimic pre-development conditions. Stormwater will be retained in infiltration facilities and mimic the time of concentration compared to existing condition.
Disconnect impervious areas: ☒ Yes ☐ No Explanation: The infiltration facilities are permeable areas that will disconnect impervious areas before discharging offsite. Roof downspouts are designed to drain into BMPs that are permeable.
Protect existing vegetation and sensitive areas: ☐ Yes ☒ No Explanation: Not applicable, there is no existing vegetation onsite (see Attachment A for recent site photos). The site is being developed into a light industrial facility. There are no sensitive areas to protect. Landscape will be provided throughout the site.
Re-vegetate disturbed areas: ☐ Yes ☒ No Explanation: Not applicable, development consists of three light-industrial warehouses. Most of the disturbed areas will be paved; however, all disturbed areas will be collected by the infiltration facilities for treatment. Landscape will be provided throughout the site.
Minimize unnecessary compaction in stormwater retention/infiltration basin/trench areas: ☒ Yes ☐ No Explanation: Heavy construction vehicles will be prohibited from performing unnecessary soil compaction at the locations of the infiltration facilities.
Utilize vegetated drainage swales in place of underground piping or imperviously lined swales: ☐ Yes ☒ No Explanation: Underground piping and imperviously lined swales are located at truck loading areas that could not be substituted with vegetated swales. All Imperviously lined swales will be taken to the infiltration facilities for treatment.
Stake off areas that will be used for landscaping to minimize compaction during construction : ☒ Yes ☐ No Explanation: Landscaped areas (not located in the compacted building zone area) will be staked to minimize unnecessary compaction during construction. Material storage areas and stockpiles will be located on areas being developed into a parking lot. Access routes for heavy equipment will be located around infiltration locations.

4.2 Project Performance Criteria

The purpose of this section of the Project WQMP is to establish targets for post development hydrology based on performance criteria specified in the MS4 Permit. These targets include runoff volume for water quality control (referred to as LID design capture volume), and runoff volume, time of concentration, and peak runoff for protection of any downstream waterbody segments with a HCOC. ***If the project has more than one outlet for stormwater runoff, then complete additional versions of these forms for each DA / outlet.***

Methods applied in the following forms include:

- For LID BMP Design Capture Volume (DCV), the San Bernardino County Stormwater Program requires use of the P6 method (MS4 Permit Section XI.D.6a.ii) – Form 4.2-1
- For HCOC pre- and post-development hydrologic calculation, the San Bernardino County Stormwater Program requires the use of the Rational Method (San Bernardino County Hydrology Manual Section D). Forms 4.2-2 through Form 4.2-5 calculate hydrologic variables including runoff volume, time of concentration, and peak runoff from the project site pre- and post-development using the Hydrology Manual Rational Method approach. For projects greater than 640 acres (1.0 mi2), the Rational Method and these forms should not be used. For such projects, the Unit Hydrograph Method (San Bernardino County Hydrology Manual Section E) shall be applied for hydrologic calculations for HCOC performance criteria.

Refer to Section 4 in the TGD for WQMP for detailed guidance and instructions.

Form 4.2-1 LID BMP Performance Criteria for Design Capture Volume (DA 1)

[1] **Project area (ft^2):** 555,390 (DMA A – 12.75 ac)	[2] **Imperviousness after applying preventative site design practices (Imp%):** 95%	[3] **Runoff Coefficient (R_c):** 0.807 $R_C = 0.858(Imp\%)^3 - 0.78(Imp\%)^2 + 0.774(Imp\%) + 0.04$
[4] **Determine 1-hour rainfall depth for a 2-year return period $P_{2yr-1hr}$ (in):** 0.617 http://hdsc.nws.noaa.gov/hdsc/pfds/sa/sca_pfds.html		
[5] **Compute P6, Mean 6-hr Precipitation (inches):** 0.914 *P6 = Item 4 *C_1, where C_1 is a function of site climatic region specified in Form 3-1 Item 1* *(Valley = 1.4807; Mountain = 1.909; Desert = 1.2371)*		
[6] **Drawdown Rate** *Use 48 hours as the default condition. Selection and use of the 24 hour drawdown time condition is subject to approval by the local jurisdiction. The necessary BMP footprint is a function of drawdown time. While shorter drawdown times reduce the performance criteria for LID BMP design capture volume, the depth of water that can be stored is also reduced.*		24-hrs ☐ 48-hrs ☒
[7] **Compute design capture volume, DCV (ft^3):** 66,981 *DCV = 1/12 * [Item 1* Item 3 *Item 5 * C_2], where C_2 is a function of drawdown rate (24-hr = 1.582; 48-hr = 1.963)* *Compute separate DCV for each outlet from the project site per schematic drawn in Form 3-1 Item 2*		

Form 4.2-1 LID BMP Performance Criteria for Design Capture Volume (DA 2)

[1] **Project area (ft^2):** 263,538 (DMA A – 6.05 ac)	[2] **Imperviousness after applying preventative site design practices (Imp%):** 95%	[3] **Runoff Coefficient (R_c):** 0.807 $R_C = 0.858(Imp\%)^3 - 0.78(Imp\%)^2 + 0.774(Imp\%) + 0.04$
[4] **Determine 1-hour rainfall depth for a 2-year return period $P_{2yr-1hr}$ (in):** 0.617 http://hdsc.nws.noaa.gov/hdsc/pfds/sa/sca_pfds.html		
[5] **Compute P6, Mean 6-hr Precipitation (inches):** 0.914 *P6 = Item 4 *C_1, where C_1 is a function of site climatic region specified in Form 3-1 Item 1* *(Valley = 1.4807; Mountain = 1.909; Desert = 1.2371)*		
[6] **Drawdown Rate** *Use 48 hours as the default condition. Selection and use of the 24 hour drawdown time condition is subject to approval by the local jurisdiction. The necessary BMP footprint is a function of drawdown time. While shorter drawdown times reduce the performance criteria for LID BMP design capture volume, the depth of water that can be stored is also reduced.*		24-hrs ☐ 48-hrs ☒
[7] **Compute design capture volume, DCV (ft^3):** 31,783 *DCV = 1/12 * [Item 1* Item 3 *Item 5 * C_2], where C_2 is a function of drawdown rate (24-hr = 1.582; 48-hr = 1.963)* *Compute separate DCV for each outlet from the project site per schematic drawn in Form 3-1 Item 2*		

Form 4.2-1 LID BMP Performance Criteria for Design Capture Volume (DA 3)

[1] **Project area (ft^2):** 564,102 (DMA A – 12.95 ac)	[2] **Imperviousness after applying preventative site design practices (Imp%):** 95%	[3] **Runoff Coefficient (R_c):** 0.807 $R_C = 0.858(Imp\%)^3 - 0.78(Imp\%)^2 + 0.774(Imp\%) + 0.04$
[4] **Determine 1-hour rainfall depth for a 2-year return period $P_{2yr-1hr}$ (in):** 0.617 http://hdsc.nws.noaa.gov/hdsc/pfds/sa/sca_pfds.html		
[5] **Compute P6, Mean 6-hr Precipitation (inches):** 0.914 *P6 = Item 4 *C_1, where C_1 is a function of site climatic region specified in Form 3-1 Item 1* *(Valley = 1.4807; Mountain = 1.909; Desert = 1.2371)*		
[6] **Drawdown Rate** *Use 48 hours as the default condition. Selection and use of the 24 hour drawdown time condition is subject to approval by the local jurisdiction. The necessary BMP footprint is a function of drawdown time. While shorter drawdown times reduce the performance criteria for LID BMP design capture volume, the depth of water that can be stored is also reduced.*		24-hrs ☐ 48-hrs ☒
[7] **Compute design capture volume, DCV (ft^3):** 68,032 *DCV = 1/12 * [Item 1* Item 3 *Item 5 * C_2], where C_2 is a function of drawdown rate (24-hr = 1.582; 48-hr = 1.963)* *Compute separate DCV for each outlet from the project site per schematic drawn in Form 3-1 Item 2*		

Form 4.2-1 LID BMP Performance Criteria for Design Capture Volume (DA 4)

[1] **Project area (ft^2):** 646,866 (DMA A – 14.85 ac)	[2] **Imperviousness after applying preventative site design practices (Imp%):** 95%	[3] **Runoff Coefficient (R_c):** 0.807 *$R_C = 0.858(Imp\%)^3 - 0.78(Imp\%)^2 + 0.774(Imp\%) + 0.04$*

[4] **Determine 1-hour rainfall depth for a 2-year return period $P_{2yr-1hr}$ (in):** 0.617
http://hdsc.nws.noaa.gov/hdsc/pfds/sa/sca_pfds.html

[5] **Compute P6, Mean 6-hr Precipitation (inches):** 0.914

*P6 = Item 4 *C_1, where C_1 is a function of site climatic region specified in Form 3-1 Item 1*

(Valley = 1.4807; Mountain = 1.909; Desert = 1.2371)

[6] **Drawdown Rate** *Use 48 hours as the default condition. Selection and use of the 24 hour drawdown time condition is subject to approval by the local jurisdiction. The necessary BMP footprint is a function of drawdown time. While shorter drawdown times reduce the performance criteria for LID BMP design capture volume, the depth of water that can be stored is also reduced.*	24-hrs ☐ 48-hrs ☒

[7] **Compute design capture volume, DCV (ft^3):** 78,013

*DCV = 1/12 * [Item 1* Item 3 *Item 5 * C_2], where C_2 is a function of drawdown rate (24-hr = 1.582; 48-hr = 1.963)*

Compute separate DCV for each outlet from the project site per schematic drawn in Form 3-1 Item 2

[1] **Project area (ft^2):** 36,155 (ROW Improvements – 0.83 ac)	[2] **Imperviousness after applying preventative site design practices (Imp%):** 100%	[3] **Runoff Coefficient (R_c):** 0.892 *$R_C = 0.858(Imp\%)^3 - 0.78(Imp\%)^2 + 0.774(Imp\%) + 0.04$*

[4] **Determine 1-hour rainfall depth for a 2-year return period $P_{2yr-1hr}$ (in):** 0.617
http://hdsc.nws.noaa.gov/hdsc/pfds/sa/sca_pfds.html

[5] **Compute P6, Mean 6-hr Precipitation (inches):** 0.914

*P6 = Item 4 *C_1, where C_1 is a function of site climatic region specified in Form 3-1 Item 1*

(Valley = 1.4807; Mountain = 1.909; Desert = 1.2371)

[6] **Drawdown Rate** *Use 48 hours as the default condition. Selection and use of the 24 hour drawdown time condition is subject to approval by the local jurisdiction. The necessary BMP footprint is a function of drawdown time. While shorter drawdown times reduce the performance criteria for LID BMP design capture volume, the depth of water that can be stored is also reduced.*	24-hrs ☐ 48-hrs ☒

[7] **Compute design capture volume, DCV (ft^3):** 4,820

*DCV = 1/12 * [Item 1* Item 3 *Item 5 * C_2], where C_2 is a function of drawdown rate (24-hr = 1.582; 48-hr = 1.963)*

Compute separate DCV for each outlet from the project site per schematic drawn in Form 3-1 Item 2

Form 4.2-2 Summary of HCOC Assessment

Does project have the potential to cause or contribute to an HCOC in a downstream channel: ☐ Yes ☒ No

Go to: http://sbcounty.permitrack.com/WAP/

If "Yes", then complete HCOC assessment of site hydrology for 2yr storm event using Forms 4.2-3 through 4.2-5 and insert results below (Forms 4.2-3 through 4.2-5 may be replaced by computer software analysis based on the San Bernardino County Hydrology Manual)

If "No," then proceed to Section 4.3 Project Conformance Analysis

Condition	Runoff Volume (ft^3)	Time of Concentration (min)	Peak Runoff (cfs)
Pre-developed	[1] n/a *Form 4.2-3 Item 12*	[2] n/a *Form 4.2-4 Item 13*	[3] n/a *Form 4.2-5 Item 10*
Post-developed	[4] n/a *Form 4.2-3 Item 13*	[5] n/a *Form 4.2-4 Item 14*	[6] n/a *Form 4.2-5 Item 14*
Difference	[7] n/a *Item 4 – Item 1*	[8] n/a *Item 5 – Item 2*	[9] n/a *Item 6 – Item 3*
Difference (as % of pre-developed)	[10] n/a *Item 7 / Item 1*	[11] n/a *Item 8 / Item 2*	[12] n/a *Item 9 / Item 3*

Form 4.2-3 HCOC Assessment for Runoff Volume (DA 1)

Weighted Curve Number Determination for: Pre-developed DA	DMA A	DMA B	DMA C	DMA D	DMA E	DMA F	DMA G	DMA H
1a Land Cover type	n/a	n/a	n/a	n/a	n/a	n/a	n/a	n/a
2a Hydrologic Soil Group (HSG)	n/a	n/a	n/a	n/a	n/a	n/a	n/a	n/a
3a DMA Area, ft^2 *sum of areas of DMA should equal area of DA*	0	0	0	0	0	0	0	0
4a Curve Number (CN) *use Items 1 and 2 to select the appropriate CN from Appendix C-2 of the TGD for WQMP*	0	0	0	0	0	0	0	0
Weighted Curve Number Determination for: Post-developed DA	DMA A	DMA B	DMA C	DMA D	DMA E	DMA F	DMA G	DMA H
1b Land Cover type	n/a	n/a	n/a	n/a	n/a	n/a	n/a	n/a
2b Hydrologic Soil Group (HSG)	n/a	n/a	n/a	n/a	n/a	n/a	n/a	n/a
3b DMA Area, ft^2 *sum of areas of DMA should equal area of DA*	0	0	0	0	0	0	0	0
4b Curve Number (CN) *use Items 5 and 6 to select the appropriate CN from Appendix C-2 of the TGD for WQMP*	0	0	0	0	0	0	0	0

5 Pre-Developed area-weighted CN: 0	**7** Pre-developed soil storage capacity, S (in): 0 *S = (1000 / Item 5) - 10*	**9** Initial abstraction, I_a (in): 0 *I_a = 0.2 * Item 7*
6 Post-Developed area-weighted CN: 0	**8** Post-developed soil storage capacity, S (in): 0 *S = (1000 / Item 6) - 10*	**10** Initial abstraction, I_a (in): 0 *I_a = 0.2 * Item 8*

11 Precipitation for 2 yr, 24 hr storm (in): 0
Go to: http://hdsc.nws.noaa.gov/hdsc/pfds/sa/sca_pfds.html

12 Pre-developed Volume (ft^3): 0
*V_{pre} =(1 / 12) * (Item sum of Item 3) * [(Item 11 – Item 9)^2 / ((Item 11 – Item 9 + Item 7)*

13 Post-developed Volume (ft^3): 0
*V_{pre} =(1 / 12) * (Item sum of Item 3) * [(Item 11 – Item 10)^2 / ((Item 11 – Item 10 + Item 8)*

14 Volume Reduction needed to meet HCOC Requirement, (ft^3): 0
*V_{HCOC} = (Item 13 * 0.95) – Item 12*

Form 4.2-4 HCOC Assessment for Time of Concentration (DA 1)

Compute time of concentration for pre and post developed conditions for each DA

(For projects using the Hydrology Manual complete the form below)

Variables	Pre-developed DA1 *Use additional forms if there are more than 4 DMA*				Post-developed DA1 *Use additional forms if there are more than 4 DMA*			
	DMA A	DMA B	DMA C	DMA D	DMA A	DMA B	DMA C	DMA D
1 Length of flowpath (ft) *Use Form 3-2 Item 5 for pre-developed condition*	0	0	0	0	0	0	0	0
2 Change in elevation (ft)	0	0	0	0	0	0	0	0
3 Slope (ft/ft) *S_o = Item 2 / Item 1*	0	0	0	0	0	0	0	0
4 Land cover	n/a	n/a	n/a	n/a	n/a	n/a	n/a	n/a
5 Initial DMA Time of Concentration (min) *Appendix C-1 of the TGD for WQMP*	0	0	0	0	0	0	0	0
6 Length of conveyance from DMA outlet to project site outlet (ft) *May be zero if DMA outlet is at project site outlet*	0	0	0	0	0	0	0	0
7 Cross-sectional area of channel (ft^2)	0	0	0	0	0	0	0	0
8 Wetted perimeter of channel (ft)	0	0	0	0	0	0	0	0
9 Manning's roughness of channel (n)	0	0	0	0	0	0	0	0
10 Channel flow velocity (ft/sec) *V_{fps} = (1.49 / Item 9) * (Item 7/Item 8)^0.67 * (Item 3)^0.5*	0	0	0	0	0	0	0	0
11 Travel time to outlet (min) *T_t = Item 6 / (Item 10 * 60)*	0	0	0	0	0	0	0	0
12 Total time of concentration (min) *T_c = Item 5 + Item 11*	0	0	0	0	0	0	0	0
13 Pre-developed time of concentration (min): 0 *Minimum of Item 12 pre-developed DMA*								
14 Post-developed time of concentration (min): 0 *Minimum of Item 12 post-developed DMA*								
15 Additional time of concentration needed to meet HCOC requirement (min): 0 *$T_{C\text{-}HCOC}$ = (Item 13 * 0.95) – Item 14*								

Form 4.2-5 HCOC Assessment for Peak Runoff (DA 1)

Compute peak runoff for pre- and post-developed conditions

Variables		Pre-developed DA to Project Outlet (*Use additional forms if more than 3 DMA)*			Post-developed DA to Project Outlet (*Use additional forms if more than 3 DMA)*		
		DMA A	DMA B	DMA C	DMA A	DMA B	DMA C
1 Rainfall Intensity for storm duration equal to time of concentration *I_{peak} = 10^(LOG Form 4.2-1 Item 4 - 0.6 LOG Form 4.2-4 Item 5 /60)*		0	0	0	0	0	0
2 Drainage Area of each DMA (Acres) *For DMA with outlet at project site outlet, include upstream DMA (Using example schematic in Form 3-1, DMA A will include drainage from DMA C)*		0	0	0	0	0	0
3 Ratio of pervious area to total area *For DMA with outlet at project site outlet, include upstream DMA (Using example schematic in Form 3-1, DMA A will include drainage from DMA C)*		0	0	0	0	0	0
4 Pervious area infiltration rate (in/hr) *Use pervious area CN and antecedent moisture condition with Appendix C-3 of the TGD for WQMP*		0	0	0	0	0	0
5 Maximum loss rate (in/hr) *F_m = Item 3 * Item 4* *Use area-weighted F_m from DMA with outlet at project site outlet, include upstream DMA (Using example schematic in Form 3-1, DMA A will include drainage from DMA C)*		0	0	0	0	0	0
6 Peak Flow from DMA (cfs) *Q_p =Item 2 * 0.9 * (Item 1 - Item 5)*		0	0	0	0	0	0
7 Time of concentration adjustment factor for other DMA to site discharge point *Form 4.2-4 Item 12 DMA / Other DMA upstream of site discharge point (If ratio is greater than 1.0, then use maximum value of 1.0)*	DMA A	*n/a*			*n/a*		
	DMA B		*n/a*			*n/a*	
	DMA C			*n/a*			*n/a*

8 Pre-developed Q_p at T_c for DMA A: 0 *Q_p = Item 6_{DMAA} + [Item 6_{DMAB} * (Item 1_{DMAA} - Item 5_{DMAB})/(Item 1_{DMAB} - Item 5_{DMAB})* Item $7_{DMAA/2}$] + [Item 6_{DMAC} * (Item 1_{DMAA} - Item 5_{DMAC})/(Item 1_{DMAC} - Item 5_{DMAC})* Item $7_{DMAA/3}$]*	**9** Pre-developed Q_p at T_c for DMA B: 0 *Q_p = Item 6_{DMAB} + [Item 6_{DMAA} * (Item 1_{DMAB} - Item 5_{DMAA})/(Item 1_{DMAA} - Item 5_{DMAA})* Item $7_{DMAB/1}$] + [Item 6_{DMAC} * (Item 1_{DMAB} - Item 5_{DMAC})/(Item 1_{DMAC} - Item 5_{DMAC})* Item $7_{DMAB/3}$]*	**10** Pre-developed Q_p at T_c for DMA C: 0 *Q_p = Item 6_{DMAC} + [Item 6_{DMAA} * (Item 1_{DMAC} - Item 5_{DMAA})/(Item 1_{DMAA} - Item 5_{DMAA})* Item $7_{DMAC/1}$] + [Item 6_{DMAB} * (Item 1_{DMAC} - Item 5_{DMAB})/(Item 1_{DMAB} - Item 5_{DMAB})* Item $7_{DMAC/2}$]*
10 Peak runoff from pre-developed condition confluence analysis (cfs): 0 *Maximum of Item 8, 9, and 10 (including additional forms as needed)*		
11 Post-developed Q_p at T_c for DMA A: 0 *Same as Item 8 for post-developed values*	**12** Post-developed Q_p at T_c for DMA B: 0 *Same as Item 9 for post-developed values*	**13** Post-developed Q_p at T_c for DMA C: 0 *Same as Item 10 for post-developed values*
14 Peak runoff from post-developed condition confluence analysis (cfs): 0 *Maximum of Item 11, 12, and 13 (including additional forms as needed)*		
15 Peak runoff reduction needed to meet HCOC Requirement (cfs): 0 *$Q_{p\text{-}HCOC}$ = (Item 14 * 0.95) – Item 10*		

4.3 Project Conformance Analysis

Complete the following forms for each project site DA to document that the proposed LID BMPs conform to the project DCV developed to meet performance criteria specified in the MS4 Permit (WQMP Template Section 4.2). For the LID DCV, the forms are ordered according to hierarchy of BMP selection as required by the MS4 Permit (see Section 5.3.1 in the TGD for WQMP). The forms compute the following for on-site LID BMP:

- Site Design and Hydrologic Source Controls (Form 4.3-2)
- Retention and Infiltration (Form 4.3-3)
- Harvested and Use (Form 4.3-4) or
- Biotreatment (Form 4.3-5).

At the end of each form, additional fields facilitate the determination of the extent of mitigation provided by the specific BMP category, allowing for use of the next category of BMP in the hierarchy, if necessary.

The first step in the analysis, using Section 5.3.2.1 of the TGD for WQMP, is to complete Forms 4.3-1 and 4.3-3) to determine if retention and infiltration BMPs are infeasible for the project. For each feasibility criterion in Form 4.3-1, if the answer is "Yes," provide all study findings that includes relevant calculations, maps, data sources, etc. used to make the determination of infeasibility.

Next, complete Forms 4.3-2 and 4.3-4 to determine the feasibility of applicable HSC and harvest and use BMPs, and, if their implementation is feasible, the extent of mitigation of the DCV.

If no site constraints exist that would limit the type of BMP to be implemented in a DA, evaluate the use of combinations of LID BMPs, including all applicable HSC BMPs to maximize on-site retention of the DCV. If no combination of BMP can mitigate the entire DCV, implement the single BMP type, or combination of BMP types, that maximizes on-site retention of the DCV within the minimum effective area.

If the combination of LID HSC, retention and infiltration, and harvest and use BMPs are unable to mitigate the entire DCV, then biotreatment BMPs may be implemented by the project proponent. If biotreatment BMPs are used, then they must be sized to provide sufficient capacity for effective treatment of the remainder of the volume-based performance criteria that cannot be achieved with LID BMPs (TGD for WQMP Section 5.4.4.2). Under no circumstances shall any portion of the DCV be released from the site without effective mitigation and/or treatment.

Form 4.3-1 Infiltration BMP Feasibility (DA 1)

Feasibility Criterion – Complete evaluation for each DA on the Project Site	
1 Would infiltration BMP pose significant risk for groundwater related concerns? *Refer to Section 5.3.2.1 of the TGD for WQMP*	☐ Yes ☒ No
If Yes, Provide basis: (attach)	
2 Would installation of infiltration BMP significantly increase the risk of geotechnical hazards (Yes, if the answer to any of the following questions is yes, as established by a geotechnical expert): • The location is less than 50 feet away from slopes steeper than 15 percent • The location is less than eight feet from building foundations or an alternative setback. • A study certified by a geotechnical professional or an available watershed study determines that stormwater infiltration would result in significantly increased risks of geotechnical hazards.	☐ Yes ☒ No
If Yes, Provide basis: (attach)	
3 Would infiltration of runoff on a Project site violate downstream water rights?	☐ Yes ☒ No
If Yes, Provide basis: (attach)	
4 Is proposed infiltration facility located on hydrologic soil group (HSG) D soils or does the site geotechnical investigation indicate presence of soil characteristics, which support categorization as D soils?	☐ Yes ☒ No
If Yes, Provide basis: (attach)	
5 Is the design infiltration rate, after accounting for safety factor of 2.0, below proposed facility less than 0.3 in/hr (accounting for soil amendments)?	☐ Yes ☒ No
If Yes, Provide basis: (attach)	
6 Would on-site infiltration or reduction of runoff over pre-developed conditions be partially or fully inconsistent with watershed management strategies as defined in the WAP, or impair beneficial uses? *See Section 3.5 of the TGD for WQMP and WAP*	☐ Yes ☒ No
If Yes, Provide basis: (attach)	
7 Any answer from Item 1 through Item 3 is "Yes": *If yes, infiltration of any volume is not feasible onsite. Proceed to Form 4.3-4, Harvest and Use BMP. If no, then proceed to Item 8 below.*	☐ Yes ☒ No
8 Any answer from Item 4 through Item 6 is "Yes": *If yes, infiltration is permissible but is not required to be considered. Proceed to Form 4.3-2, Hydrologic Source Control BMP.* *If no, then proceed to Item 9, below.*	☐ Yes ☒ No
9 All answers to Item 1 through Item 6 are "No": *Infiltration of the full DCV is potentially feasible, LID infiltration BMP must be designed to infiltrate the full DCV to the MEP.* *Proceed to Form 4.3-2, Hydrologic Source Control BMP.*	☒ Yes ☐ No

4.3.1 Site Design Hydrologic Source Control BMP

Section XI.E. of the Permit emphasizes the use of LID preventative measures; and the use of LID HSC BMPs reduces the portion of the DCV that must be addressed in downstream BMPs. Therefore, all applicable HSC shall be provided except where they are mutually exclusive with each other, or with other BMPs. Mutual exclusivity may result from overlapping BMP footprints such that either would be potentially feasible by itself, but both could not be implemented. Please note that while there are no numeric standards regarding the use of HSC, if a project cannot feasibly meet BMP sizing requirements or cannot fully address HCOCs, feasibility of all applicable HSC must be part of demonstrating that the BMP system has been designed to retain the maximum feasible portion of the DCV. Complete Form 4.3-2 to identify and calculate estimated retention volume from implementing site design HSC BMP. Refer to Section 5.4.1 in the TGD for more detailed guidance.

Form 4.3-2 Site Design Hydrologic Source Control BMPs (DA 1)

1 Implementation of Impervious Area Dispersion BMP (i.e. routing runoff from impervious to pervious areas), excluding impervious areas planned for routing to on-lot infiltration BMP: ☐ Yes ☒ No *If yes, complete Items 2-5; If no, proceed to Item 6*	DA DMA BMP Type	DA DMA BMP Type	DA DMA BMP Type *(Use additional forms for more BMPs)*
2 Total impervious area draining to pervious area (ft^2)	0	0	0
3 Ratio of pervious area receiving runoff to impervious area	0	0	0
4 Retention volume achieved from impervious area dispersion (ft^3) *V = Item2 * Item 3 * (0.5/12), assuming retention of 0.5 inches of runoff*	0	0	0
5 Sum of retention volume achieved from impervious area dispersion (ft^3): 0 $V_{retention}$ *=Sum of Item 4 for all BMPs*			
6 Implementation of Localized On-lot Infiltration BMPs (e.g. on-lot rain gardens): ☐ Yes ☒ No *If yes, complete Items 7-13 for aggregate of all on-lot infiltration BMP in each DA; If no, proceed to Item 14*	DA DMA BMP Type	DA DMA BMP Type	DA DMA BMP Type *(Use additional forms for more BMPs)*
7 Ponding surface area (ft^2)	0	0	0
8 Ponding depth (ft)	0	0	0
9 Surface area of amended soil/gravel (ft^2)	0	0	0
10 Average depth of amended soil/gravel (ft)	0	0	0
11 Average porosity of amended soil/gravel	0	0	0
12 Retention volume achieved from on-lot infiltration (ft^3) $V_{retention}$ *= (Item 7 *Item 8) + (Item 9 * Item 10 * Item 11)*	0	0	0
13 Runoff volume retention from on-lot infiltration (ft^3): 0 $V_{retention}$ *=Sum of Item 12 for all BMPs*			
14 Implementation of evapotranspiration BMP (green, brown, or blue roofs): ☐ Yes ☒ No *If yes, complete Items 15-20. If no, proceed to Item 21*	DA DMA BMP Type	DA DMA BMP Type	DA DMA BMP Type *(Use additional forms for more BMPs)*
15 Rooftop area planned for ET BMP (ft^2)	0	0	0
16 Average wet season ET demand (in/day) *Use local values, typical ~ 0.1*	0	0	0

Form 4.3-2 Site Design Hydrologic Source Control BMPs (DA 1)			
17 **Daily ET demand (ft^3/day)** *Item 15 * (Item 16 / 12)*	0	0	0
18 **Drawdown time (hrs)** *Copy Item 6 in Form 4.2-1*	0	0	0
19 **Retention Volume (ft^3)** *$V_{retention}$ = Item 17 * (Item 18 / 24)*	0	0	0
20 **Runoff volume retention from evapotranspiration BMPs (ft^3):** 0 *$V_{retention}$ =Sum of Item 19 for all BMPs*			
21 **Implementation of Street Trees:** ☐ Yes ☒ No *If yes, complete Items 22-25. If no, proceed to Item 26*	DA DMA BMP Type	DA DMA BMP Type	DA DMA BMP Type *(Use additional forms for more BMPs)*
22 **Number of Street Trees**	0	0	0
23 **Average canopy cover over impervious area (ft^2)**	0	0	0
24 **Runoff volume retention from street trees (ft^3)** *$V_{retention}$ = Item 22 * Item 23 * (0.05/12) assume runoff retention of 0.05 inches*	0	0	0
25 **Runoff volume retention from street tree BMPs (ft^3):** 0 *$V_{retention}$ = Sum of Item 24 for all BMPs*			
26 **Implementation of residential rain barrel/cisterns:** ☐ Yes ☒ No *If yes, complete Items 27-29; If no, proceed to Item 30*	DA DMA BMP Type	DA DMA BMP Type	DA DMA BMP Type *(Use additional forms for more BMPs)*
27 **Number of rain barrels/cisterns**	0	0	0
28 **Runoff volume retention from rain barrels/cisterns (ft^3)** *$V_{retention}$ = Item 27 * 3*	0	0	0
29 **Runoff volume retention from residential rain barrels/Cisterns (ft^3):** 0 *$V_{retention}$ =Sum of Item 28 for all BMPs*			
30 **Total Retention Volume from Site Design Hydrologic Source Control BMPs:** 0 *Sum of Items 5, 13, 20, 25 and 29*			

4.3.2 Infiltration BMPs

Use Form 4.3-3 to compute on-site retention of runoff from proposed retention and infiltration BMPs. Volume retention estimates are sensitive to the percolation rate used, which determines the amount of runoff that can be infiltrated within the specified drawdown time. The infiltration safety factor reduces field measured percolation to account for potential inaccuracy associated with field measurements, declining BMP performance over time, and compaction during construction. Appendix D of the TGD for WQMP provides guidance on estimating an appropriate safety factor to use in Form 4.3-3.

If site constraints limit the use of BMPs to a single type and implementation of retention and infiltration BMPs mitigate no more than 40% of the DCV, then they are considered infeasible and the Project Proponent may evaluate the effectiveness of BMPs lower in the LID hierarchy of use (Section 5.5.1 of the TGD for WQMP)

If implementation of infiltrations BMPs is feasible as determined using Form 4.3-1, then LID infiltration BMPs shall be implemented to the MEP (section 4.1 of the TGD for WQMP).

Form 4.3-3 Infiltration LID BMP – including underground BMPs (DA 1)

1 Remaining LID DCV not met by site design HSC BMP (ft^3): 66,981
V_{unmet} = Form 4.2-1 Item 7 - Form 4.3-2 Item 30

BMP Type *Use columns to the right to compute runoff volume retention from proposed infiltration BMP (select BMP from Table 5-4 in TGD for WQMP) - Use additional forms for more BMPs*	DA 1 DMA A STC #1	DA DMA BMP Type	DA DMA BMP Type *(Use additional forms for more BMPs)*
2 Infiltration rate of underlying soils (in/hr) *See Section 5.4.2 and Appendix D of the TGD for WQMP for minimum requirements for assessment methods*	7.6		
3 Infiltration safety factor *See TGD Section 5.4.2 and Appendix D*	2.25		
4 Design percolation rate (in/hr) *P_{design} = Item 2 / Item 3*	3.37		
5 Ponded water drawdown time (hr) *Copy Item 6 in Form 4.2-1*	48		
6 Maximum ponding depth (ft) *BMP specific, see Table 5-4 of the TGD for WQMP for BMP design details*	5.7		
7 Ponding Depth (ft) *d_{BMP} = Minimum of (1/12*Item 4*Item 5) or Item 6*	5.7		
8 Infiltrating surface area, SA_{BMP} (ft^2) *the lesser of the area needed for infiltration of full DCV or minimum space requirements from Table 5.7 of the TGD for WQMP*	15,515		
9 Amended soil depth, d_{media} (ft) *Only included in certain BMP types, see Table 5-4 in the TGD for WQMP for reference to BMP design details*	n/a		
10 Amended soil porosity	n/a		
11 Gravel depth, d_{media} (ft) *Only included in certain BMP types, see Table 5-4 of the TGD for WQMP for BMP design details*	0.75		
12 Gravel porosity	0.40		
13 Duration of storm as basin is filling (hrs) *Typical ~ 3hrs*	3		
14 Above Ground Retention Volume (ft^3) *$V_{retention}$ = Item 8 * [Item7 + (Item 9 * Item 10) + (Item 11 * Item 12) + (Item 13 * (Item 4 / 12))]*	n/a		
15 Underground Retention Volume (ft^3) *Volume determined using manufacturer's specifications and calculations*	67,102		

16 Total Retention Volume from LID Infiltration BMPs: 67,102
(Sum of Items 14 and 15 for all infiltration BMP included in plan)

17 Fraction of DCV achieved with infiltration BMP: 100%
Retention% = Item 16 / Form 4.2-1 Item 7

18 Is full LID DCV retained onsite with combination of hydrologic source control and LID retention/infiltration BMPs?
☒ Yes ☐ No
If yes, demonstrate conformance using Form 4.3-10; If no, then reduce Item 3, Factor of Safety to 2.0 and increase Item 8, Infiltrating Surface Area, such that the portion of the site area used for retention and infiltration BMPs equals or exceeds the minimum effective area thresholds (Table 5-7 of the TGD for WQMP) for the applicable category of development and repeat all above calculations.

Form 4.3-4 Infiltration LID BMP – including underground BMPs (DA 2)

1 Remaining LID DCV not met by site design HSC BMP (ft³): 31,783
V_{unmet} = Form 4.2-1 Item 7 - Form 4.3-2 Item 30

BMP Type *Use columns to the right to compute runoff volume retention from proposed infiltration BMP (select BMP from Table 5-4 in TGD for WQMP) - Use additional forms for more BMPs*	DA 1 DMA A STC #2	DA DMA BMP Type	DA DMA BMP Type *(Use additional forms for more BMPs)*
2 Infiltration rate of underlying soils (in/hr) *See Section 5.4.2 and Appendix D of the TGD for WQMP for minimum requirements for assessment methods*	3.0		
3 Infiltration safety factor *See TGD Section 5.4.2 and Appendix D*	2.0		
4 Design percolation rate (in/hr) *P_{design} = Item 2 / Item 3*	1.5		
5 Ponded water drawdown time (hr) *Copy Item 6 in Form 4.2-1*	48		
6 Maximum ponding depth (ft) *BMP specific, see Table 5-4 of the TGD for WQMP for BMP design details*	5.7		
7 Ponding Depth (ft) *d_{BMP} = Minimum of (1/12*Item 4*Item 5) or Item 6*	5.7		
8 Infiltrating surface area, SA_{BMP} (ft²) *the lesser of the area needed for infiltration of full DCV or minimum space requirements from Table 5.7 of the TGD for WQMP*	7,474		
9 Amended soil depth, d_{media} (ft) *Only included in certain BMP types, see Table 5-4 in the TGD for WQMP for reference to BMP design details*	n/a		
10 Amended soil porosity	n/a		
11 Gravel depth, d_{media} (ft) *Only included in certain BMP types, see Table 5-4 of the TGD for WQMP for BMP design details*	0.75		
12 Gravel porosity	0.40		
13 Duration of storm as basin is filling (hrs) *Typical ~ 3hrs*	3		
14 Above Ground Retention Volume (ft³) *$V_{retention}$ = Item 8 * [Item7 + (Item 9 * Item 10) + (Item 11 * Item 12) + (Item 13 * (Item 4 / 12))]*	n/a		
15 Underground Retention Volume (ft³) *Volume determined using manufacturer's specifications and calculations*	31,925		

16 Total Retention Volume from LID Infiltration BMPs: 31,925
(Sum of Items 14 and 15 for all infiltration BMP included in plan)

17 Fraction of DCV achieved with infiltration BMP: 100%
Retention% = Item 16 / Form 4.2-1 Item 7

18 Is full LID DCV retained onsite with combination of hydrologic source control and LID retention/infiltration BMPs?
☒ Yes ☐ No
If yes, demonstrate conformance using Form 4.3-10; If no, then reduce Item 3, Factor of Safety to 2.0 and increase Item 8, Infiltrating Surface Area, such that the portion of the site area used for retention and infiltration BMPs equals or exceeds the minimum effective area thresholds (Table 5-7 of the TGD for WQMP) for the applicable category of development and repeat all above calculations.

Form 4.3-5 Infiltration LID BMP – including underground BMPs (DA 3)

1 Remaining LID DCV not met by site design HSC BMP (ft³): 68,032
V_{unmet} = Form 4.2-1 Item 7 - Form 4.3-2 Item 30

BMP Type *Use columns to the right to compute runoff volume retention from proposed infiltration BMP (select BMP from Table 5-4 in TGD for WQMP) - Use additional forms for more BMPs*	DA 1 DMA A STC #3	DA DMA BMP Type	DA DMA BMP Type *(Use additional forms for more BMPs)*
2 Infiltration rate of underlying soils (in/hr) *See Section 5.4.2 and Appendix D of the TGD for WQMP for minimum requirements for assessment methods*	5.77		
3 Infiltration safety factor *See TGD Section 5.4.2 and Appendix D*	2.25		
4 Design percolation rate (in/hr) *P_{design} = Item 2 / Item 3*	3.37		
5 Ponded water drawdown time (hr) *Copy Item 6 in Form 4.2-1*	48		
6 Maximum ponding depth (ft) *BMP specific, see Table 5-4 of the TGD for WQMP for BMP design details*	5.7		
7 Ponding Depth (ft) *d_{BMP} = Minimum of (1/12*Item 4*Item 5) or Item 6*	5.7		
8 Infiltrating surface area, SA_{BMP} (ft²) *the lesser of the area needed for infiltration of full DCV or minimum space requirements from Table 5.7 of the TGD for WQMP*	15,758		
9 Amended soil depth, d_{media} (ft) *Only included in certain BMP types, see Table 5-4 in the TGD for WQMP for reference to BMP design details*	n/a		
10 Amended soil porosity	n/a		
11 Gravel depth, d_{media} (ft) *Only included in certain BMP types, see Table 5-4 of the TGD for WQMP for BMP design details*	0.75		
12 Gravel porosity	0.40		
13 Duration of storm as basin is filling (hrs) *Typical ~ 3hrs*	3		
14 Above Ground Retention Volume (ft³) *$V_{retention}$ = Item 8 * [Item7 + (Item 9 * Item 10) + (Item 11 * Item 12) + (Item 13 * (Item 4 / 12))]*	n/a		
15 Underground Retention Volume (ft³) *Volume determined using manufacturer's specifications and calculations*	68,077		

16 Total Retention Volume from LID Infiltration BMPs: 68,077
(Sum of Items 14 and 15 for all infiltration BMP included in plan)

17 Fraction of DCV achieved with infiltration BMP: 100%
Retention% = Item 16 / Form 4.2-1 Item 7

18 Is full LID DCV retained onsite with combination of hydrologic source control and LID retention/infiltration BMPs?
☒ Yes ☐ No
If yes, demonstrate conformance using Form 4.3-10; If no, then reduce Item 3, Factor of Safety to 2.0 and increase Item 8, Infiltrating Surface Area, such that the portion of the site area used for retention and infiltration BMPs equals or exceeds the minimum effective area thresholds (Table 5-7 of the TGD for WQMP) for the applicable category of development and repeat all above calculations.

Form 4.3-6 Infiltration LID BMP – including underground BMPs (DA 4)

1 Remaining LID DCV not met by site design HSC BMP (ft^3): 82,833
V_{unmet} = Form 4.2-1 Item 7 - Form 4.3-2 Item 30

BMP Type *Use columns to the right to compute runoff volume retention from proposed infiltration BMP (select BMP from Table 5-4 in TGD for WQMP) - Use additional forms for more BMPs*	DA 1 DMA A STC #4	DA DMA BMP Type	DA DMA BMP Type *(Use additional forms for more BMPs)*
2 Infiltration rate of underlying soils (in/hr) *See Section 5.4.2 and Appendix D of the TGD for WQMP for minimum requirements for assessment methods*	5.7		
3 Infiltration safety factor *See TGD Section 5.4.2 and Appendix D*	2.25		
4 Design percolation rate (in/hr) *P_{design} = Item 2 / Item 3*	2.53		
5 Ponded water drawdown time (hr) *Copy Item 6 in Form 4.2-1*	48		
6 Maximum ponding depth (ft) *BMP specific, see Table 5-4 of the TGD for WQMP for BMP design details*	5.7		
7 Ponding Depth (ft) *d_{BMP} = Minimum of (1/12*Item 4*Item 5) or Item 6*	5.7		
8 Infiltrating surface area, SA_{BMP} (ft^2) *the lesser of the area needed for infiltration of full DCV or minimum space requirements from Table 5.7 of the TGD for WQMP*	19,136		
9 Amended soil depth, d_{media} (ft) *Only included in certain BMP types, see Table 5-4 in the TGD for WQMP for reference to BMP design details*	n/a		
10 Amended soil porosity	n/a		
11 Gravel depth, d_{media} (ft) *Only included in certain BMP types, see Table 5-4 of the TGD for WQMP for BMP design details*	0.75		
12 Gravel porosity	0.40		
13 Duration of storm as basin is filling (hrs) *Typical ~ 3hrs*	3		
14 Above Ground Retention Volume (ft^3) *$V_{retention}$ = Item 8 * [Item7 + (Item 9 * Item 10) + (Item 11 * Item 12) + (Item 13 * (Item 4 / 12))]*	n/a		
15 Underground Retention Volume (ft^3) *Volume determined using manufacturer's specifications and calculations*	82,928		

16 Total Retention Volume from LID Infiltration BMPs: 82,928
(Sum of Items 14 and 15 for all infiltration BMP included in plan)

17 Fraction of DCV achieved with infiltration BMP: 100%
Retention% = Item 16 / Form 4.2-1 Item 7

18 Is full LID DCV retained onsite with combination of hydrologic source control and LID retention/infiltration BMPs?
☒ Yes ☐ No
If yes, demonstrate conformance using Form 4.3-10; If no, then reduce Item 3, Factor of Safety to 2.0 and increase Item 8, Infiltrating Surface Area, such that the portion of the site area used for retention and infiltration BMPs equals or exceeds the minimum effective area thresholds (Table 5-7 of the TGD for WQMP) for the applicable category of development and repeat all above calculations.

4.3.3 Harvest and Use BMP

Harvest and use BMP may be considered if the full LID DCV cannot be met by maximizing infiltration BMPs. Use Form 4.3-4 to compute on-site retention of runoff from proposed harvest and use BMPs.

Volume retention estimates for harvest and use BMPs are sensitive to the on-site demand for captured stormwater. Since irrigation water demand is low in the wet season, when most rainfall events occur in San Bernardino County, the volume of water that can be used within a specified drawdown period is relatively low. The bottom portion of Form 4.3-4 facilitates the necessary computations to show infeasibility if a minimum incremental benefit of 40 percent of the LID DCV would not be achievable with MEP implementation of on-site harvest and use of stormwater (Section 5.5.4 of the TGD for WQMP).

Form 4.3-7 Harvest and Use BMPs (DA 1)

1 Remaining LID DCV not met by site design HSC or infiltration BMP (ft^3): 0 *V_{unmet} = Form 4.2-1 Item 7 - Form 4.3-2 Item 30 – Form 4.3-3 Item 16*			
BMP Type(s) *Compute runoff volume retention from proposed harvest and use BMP (Select BMPs from Table 5-4 of the TGD for WQMP) - Use additional forms for more BMPs*	DA DMA BMP Type *(Use additional forms for more BMPs)*	DA DMA BMP Type *(Use additional forms for more BMPs)*	DA DMA BMP Type *(Use additional forms for more BMPs)*
2 Describe cistern or runoff detention facility	n/a	n/a	n/a
3 Storage volume for proposed detention type (ft^3) *Volume of cistern*	0	0	0
4 Landscaped area planned for use of harvested stormwater (ft^2)	0	0	0
5 Average wet season daily irrigation demand (in/day) Use local values, typical ~ 0.1 in/day	0	0	0
6 Daily water demand (ft^3/day) *Item 4 * (Item 5 / 12)*	0	0	0
7 Drawdown time (hrs) *Copy Item 6 from Form 4.2-1*	0	0	0
8 Retention Volume (ft^3) *$V_{retention}$ = Minimum of (Item 3) or (Item 6 * (Item 7 / 24))*	0	0	0
9 Total Retention Volume (ft^3) from Harvest and Use BMP: 0 *Sum of Item 8 for all harvest and use BMP included in plan*			
10 Is the full DCV retained with a combination of LID HSC, retention and infiltration, and harvest & use BMPs? ☐ Yes ☒ No *If yes, demonstrate conformance using Form 4.3-10. If no, then re-evaluate combinations of all LID BMP and optimize their implementation such that the maximum portion of the DCV is retained on-site (using a single BMP type or combination of BMP types). If the full DCV cannot be mitigated after this optimization process, proceed to Section 4.3.4.*			

4.3.4 Biotreatment BMP

Biotreatment BMPs may be considered if the full LID DCV cannot be met by maximizing retention and infiltration, and harvest and use BMPs. A key consideration when using biotreatment BMP is the effectiveness of the proposed BMP in addressing the pollutants of concern for the project (see Table 5-5 of the TGD for WQMP).

Use Form 4.3-5 to summarize the potential for volume based and/or flow based biotreatment options to biotreat the remaining unmet LID DCV. Biotreatment computations are included as follows:

- Use Form 4.3-6 to compute biotreatment in small volume based biotreatment BMP (e.g. bioretention w/underdrains);
- Use Form 4.3-7 to compute biotreatment in large volume based biotreatment BMP (e.g. constructed wetlands);
- Use Form 4.3-8 to compute sizing criteria for flow-based biotreatment BMP (e.g. bioswales)

Form 4.3-8 Selection and Evaluation of Biotreatment BMP (DA 1)

<table>
<tr><td colspan="2">1 Remaining LID DCV not met by site design HSC, infiltration, or harvest and use BMP for potential biotreatment (ft³): 0
Form 4.2-1 Item 7 – Form 4.3-2 Item 30 – Form 4.3-3 Item 16- Form 4.3-4 Item 9</td><td colspan="2">List pollutants of concern
Copy from Form 2.3-1
none</td></tr>
<tr><td rowspan="2">2 Biotreatment BMP Selected
(Select biotreatment BMP(s) necessary to ensure all pollutants of concern are addressed through Unit Operations and Processes, described in Table 5-5 of the TGD for WQMP)</td><td>Volume-based biotreatment
Use Forms 4.3-6 and 4.3-7 to compute treated volume</td><td>Flow-based biotreatment
Use Form 4.3-8 to compute treated volume</td></tr>
<tr><td>☐ Bioretention with underdrain
☐ Planter box with underdrain
☐ Constructed wetlands
☐ Wet extended detention
☐ Dry extended detention</td><td>☐ Vegetated swale
☐ Vegetated filter strip
☐ Proprietary biotreatment</td></tr>
<tr><td>3 Volume biotreated in volume based biotreatment BMP (ft³): 0
Form 4.3-6 Item 15 + Form 4.3-7 Item 13</td><td>4 Compute remaining LID DCV with implementation of volume based biotreatment BMP (ft³): 0
Item 1 – Item 3</td><td>5 Remaining fraction of LID DCV for sizing flow based biotreatment BMP: 0%
Item 4 / Item 1</td></tr>
<tr><td colspan="3">6 Flow-based biotreatment BMP capacity provided (cfs): 0
Use Figure 5-2 of the TGD for WQMP to determine flow capacity required to provide biotreatment of remaining percentage of unmet LID DCV (Item 5), for the project's precipitation zone (Form 3-1 Item 1)</td></tr>
<tr><td colspan="3">7 Metrics for MEP determination:
Provided a WQMP with the portion of site area used for suite of LID BMP equal to minimum thresholds in Table 5-7 of the TGD for WQMP for the proposed category of development: ☐
If maximized on-site retention BMPs is feasible for partial capture, then LID BMP implementation must be optimized to retain and infiltrate the maximum portion of the DCV possible within the prescribed minimum effective area. The remaining portion of the DCV shall then be mitigated using biotreatment BMP.</td></tr>
</table>

Form 4.3-9 Volume Based Biotreatment (DA 1) Bioretention and Planter Boxes with Underdrains

Biotreatment BMP Type *(Bioretention w/underdrain, planter box w/underdrain, other comparable BMP)*	DA DMA BMP Type *(Use additional forms for more BMPs)*	DA DMA BMP Type *(Use additional forms for more BMPs)*	DA DMA BMP Type *(Use additional forms for more BMPs)*
1 Pollutants addressed with BMP *List all pollutant of concern that will be effectively reduced through specific Unit Operations and Processes described in Table 5-5 of the TGD for WQMP*	n/a	n/a	n/a
2 Amended soil infiltration rate *Typical ~ 5.0*	0	0	0
3 Amended soil infiltration safety factor *Typical ~ 2.0*	0	0	0
4 Amended soil design percolation rate (in/hr) P_{design} *= Item 2 / Item 3*	0	0	0
5 Ponded water drawdown time (hr) *Copy Item 6 from Form 4.2-1*	0	0	0
6 Maximum ponding depth (ft) *see Table 5-6 of the TGD for WQMP for reference to BMP design details*	0	0	0
7 Ponding Depth (ft) d_{BMP} *= Minimum of (1/12 * Item 4 * Item 5) or Item 6*	0	0	0
8 Amended soil surface area (ft^2)	0	0	0
9 Amended soil depth (ft) *see Table 5-6 of the TGD for WQMP for reference to BMP design details*	0	0	0
10 Amended soil porosity, *n*	0	0	0
11 Gravel depth (ft) *see Table 5-6 of the TGD for WQMP for reference to BMP design details*	0	0	0
12 Gravel porosity, *n*	0	0	0
13 Duration of storm as basin is filling (hrs) *Typical ~ 3hrs*	0	0	0
14 Biotreated Volume (ft^3) $V_{biotreated}$ *= Item 8 * [(Item 7/2) + (Item 9 * Item 10) +(Item 11 * Item 12) + (Item 13 * (Item 4 / 12))]*	0	0	0
15 Total biotreated volume from bioretention and/or planter box with underdrains BMP: 0 *Sum of Item 14 for all volume-based BMPs included in this form*			

Form 4.3-10 Volume Based Biotreatment (DA 1)
Constructed Wetlands and Extended Detention

Biotreatment BMP Type *Constructed wetlands, extended wet detention, extended dry detention, or other comparable proprietary BMP. If BMP includes multiple modules (e.g. forebay and main basin), provide separate estimates for storage and pollutants treated in each module.*	DA DMA BMP Type *(Use additional forms for more BMPs)*		DA DMA BMP Type *(Use additional forms for more BMPs)*	
	Forebay	Basin	Forebay	Basin
1 Pollutants addressed with BMP forebay and basin *List all pollutant of concern that will be effectively reduced through specific Unit Operations and Processes described in Table 5-5 of the TGD for WQMP*	n/a	n/a	n/a	n/a
2 Bottom width (ft)	0	0	0	0
3 Bottom length (ft)	0	0	0	0
4 Bottom area (ft^2) *A_{bottom} = Item 2 * Item 3*	0	0	0	0
5 Side slope (ft/ft)	0	0	0	0
6 Depth of storage (ft)	0	0	0	0
7 Water surface area (ft^2) $A_{surface}$ =(Item 2 + (2 * Item 5 * Item 6)) * (Item 3 + (2 * Item 5 * Item 6))	0	0	0	0
8 Storage volume (ft^3) *For BMP with a forebay, ensure fraction of total storage is within ranges specified in BMP specific fact sheets, see Table 5-6 of the TGD for WQMP for reference to BMP design details* V =Item 6 / 3 * [Item 4 + Item 7 + (Item 4 * Item 7)^0.5]	0	0	0	0
9 Drawdown Time (hrs) *Copy Item 6 from Form 2.1*	0		0	
10 Outflow rate (cfs) *Q_{BMP} = (Item $8_{forebay}$ + Item 8_{basin}) / (Item 9 * 3600)*	0		0	
11 Duration of design storm event (hrs)	0		0	
12 Biotreated Volume (ft^3) *$V_{biotreated}$ = (Item $8_{forebay}$ + Item 8_{basin}) +(Item 10 * Item 11 * 3600)*	0		0	
13 Total biotreated volume from constructed wetlands, extended dry detention, or extended wet detention: 0 *(Sum of Item 12 for all BMP included in plan)*				

Form 4.3-11 Flow Based Biotreatment (DA 1)			
Biotreatment BMP Type *Vegetated swale, vegetated filter strip, or other comparable proprietary BMP*	DA DMA BMP Type *(Use additional forms for more BMPs)*	DA DMA BMP Type *(Use additional forms for more BMPs)*	DA DMA BMP Type *(Use additional forms for more BMPs)*
1 Pollutants addressed with BMP *List all pollutant of concern that will be effectively reduced through specific Unit Operations and Processes described in TGD Table 5-5*	n/a	n/a	n/a
2 Flow depth for water quality treatment (ft) *BMP specific, see Table 5-6 of the TGD for WQMP for reference to BMP design details*	0	0	0
3 Bed slope (ft/ft) *BMP specific, see Table 5-6 of the TGD for WQMP for reference to BMP design details*	0	0	0
4 Manning's roughness coefficient	0	0	0
5 Bottom width (ft) b_w = *(Form 4.3-5 Item 6 * Item 4) / (1.49 * Item 2^1.67 * Item 3^0.5)*	0	0	0
6 Side Slope (ft/ft) *BMP specific, see Table 5-6 of the TGD for WQMP for reference to BMP design details*	0	0	0
7 Cross sectional area (ft^2) *A = (Item 5 * Item 2) + (Item 6 * Item 2^2)*	0	0	0
8 Wa**ter quality flow velocity (ft/sec)** *V = Form 4.3-5 Item 6 / Item 7*	0	0	0
9 Hydraulic residence time (min) *Pollutant specific, see Table 5-6 of the TGD for WQMP for reference to BMP design details*	0	0	0
10 Len**gth of flow based BMP (ft)** *L = Item 8 * Item 9 * 60*	0	0	0
11 Water surface area at water quality flow depth (ft^2) SA_{top} = *(Item 5 + (2 * Item 2 * Item 6)) * Item 10*	0	0	0

4.3.5 Conformance Summary

Complete Form 4.3-9 to demonstrate how on-site LID DCV is met with proposed site design hydrologic source control, infiltration, harvest and use, and/or biotreatment BMP. The bottom line of the form is used to describe the basis for infeasibility determination for on-site LID BMP to achieve full LID DCV, and provides methods for computing remaining volume to be addressed in an alternative compliance plan. If the project has more than one outlet, then complete additional versions of this form for each outlet.

Form 4.3-12 Conformance Summary and Alternative Compliance Volume Estimate (DA 1)

1 Total LID DCV for the Project DA-1 (ft^3): 66,981

Copy Item 7 in Form 4.2-1

2 On-site retention with site design hydrologic source control LID BMP (ft^3): 0

Copy Item 30 in Form 4.3-2

3 On-site retention with LID infiltration BMP (ft^3): 67,102

Copy Item 16 in Form 4.3-3

4 On-site retention with LID harvest and use BMP (ft^3): 0

Copy Item 9 in Form 4.3-4

5 On-site biotreatment with volume based biotreatment BMP (ft^3): 0

Copy Item 3 in Form 4.3-5

6 Flow capacity provided by flow based biotreatment BMP (cfs): 0

Copy Item 6 in Form 4.3-5

7 LID BMP performance criteria are achieved if answer to any of the following is "Yes":

- Full retention of LID DCV with site design HSC, infiltration, or harvest and use BMP: ☒ Yes ☐ No
  If yes, sum of Items 2, 3, and 4 is greater than Item 1
- Combination of on-site retention BMPs for a portion of the LID DCV and volume-based biotreatment BMP that address all pollutants of concern for the remaining LID DCV: ☐ Yes ☒ No
  If yes, a) sum of Items 2, 3, 4, and 5 is greater than Item 1, and Items 2, 3 and 4 are maximized; or b) Item 6 is greater than Form 4.3--5 Item 6 and Items 2, 3 and 4 are maximized
- On-site retention and infiltration is determined to be infeasible and biotreatment BMP provide biotreatment for all pollutants of concern for full LID DCV: ☐ Yes ☒ No
  If yes, Form 4.3-1 Items 7 and 8 were both checked yes

8 If the LID DCV is not achieved by any of these means, then the project may be allowed to develop an alternative compliance plan. Check box that describes the scenario which caused the need for alternative compliance:

- Combination of HSC, retention and infiltration, harvest and use, and biotreatment BMPs provide less than full LID DCV capture: ☐
  *Checked yes for Form 4.3-5 Item 7, Item 6 is zero, and sum of Items 2, 3, 4, and 5 is less than Item 1. If so, apply water quality credits and calculate volume for alternative compliance, V_{alt} = (Item 1 – Item 2 – Item 3 – Item 4 – Item 5) * (100 - Form 2.4-1 Item 2)%*
- An approved Watershed Action Plan (WAP) demonstrates that water quality and hydrologic impacts of urbanization are more effective when managed in at an off-site facility: ☐
  Attach appropriate WAP section, including technical documentation, showing effectiveness comparisons for the project site and regional watershed

Form 4.3-13 Conformance Summary and Alternative Compliance Volume Estimate (DA 2)

1 Total LID DCV for the Project DA-1 (ft^3): 31,783

Copy Item 7 in Form 4.2-1

2 On-site retention with site design hydrologic source control LID BMP (ft^3): 0

Copy Item 30 in Form 4.3-2

3 On-site retention with LID infiltration BMP (ft^3): 31,925

Copy Item 16 in Form 4.3-3

4 On-site retention with LID harvest and use BMP (ft^3): 0

Copy Item 9 in Form 4.3-4

5 On-site biotreatment with volume based biotreatment BMP (ft^3): 0

Copy Item 3 in Form 4.3-5

6 Flow capacity provided by flow based biotreatment BMP (cfs): 0

Copy Item 6 in Form 4.3-5

7 LID BMP performance criteria are achieved if answer to any of the following is "Yes":

- Full retention of LID DCV with site design HSC, infiltration, or harvest and use BMP: ☒ Yes ☐ No
  If yes, sum of Items 2, 3, and 4 is greater than Item 1
- Combination of on-site retention BMPs for a portion of the LID DCV and volume-based biotreatment BMP that address all pollutants of concern for the remaining LID DCV: ☐ Yes ☒ No
  If yes, a) sum of Items 2, 3, 4, and 5 is greater than Item 1, and Items 2, 3 and 4 are maximized; or b) Item 6 is greater than Form 4.3--5 Item 6 and Items 2, 3 and 4 are maximized
- On-site retention and infiltration is determined to be infeasible and biotreatment BMP provide biotreatment for all pollutants of concern for full LID DCV: ☐ Yes ☒ No
  If yes, Form 4.3-1 Items 7 and 8 were both checked yes

8 If the LID DCV is not achieved by any of these means, then the project may be allowed to develop an alternative compliance plan. Check box that describes the scenario which caused the need for alternative compliance:

- Combination of HSC, retention and infiltration, harvest and use, and biotreatment BMPs provide less than full LID DCV capture: ☐
  *Checked yes for Form 4.3-5 Item 7, Item 6 is zero, and sum of Items 2, 3, 4, and 5 is less than Item 1. If so, apply water quality credits and calculate volume for alternative compliance, V_{alt} = (Item 1 – Item 2 – Item 3 – Item 4 – Item 5) * (100 - Form 2.4-1 Item 2)%*
- An approved Watershed Action Plan (WAP) demonstrates that water quality and hydrologic impacts of urbanization are more effective when managed in at an off-site facility: ☐
  Attach appropriate WAP section, including technical documentation, showing effectiveness comparisons for the project site and regional watershed

Form 4.3-14 Conformance Summary and Alternative Compliance Volume Estimate (DA 3)

1 Total LID DCV for the Project DA-1 (ft^3): 68,032

Copy Item 7 in Form 4.2-1

2 On-site retention with site design hydrologic source control LID BMP (ft^3): 0

Copy Item 30 in Form 4.3-2

3 On-site retention with LID infiltration BMP (ft^3): 68,077

Copy Item 16 in Form 4.3-3

4 On-site retention with LID harvest and use BMP (ft^3): 0

Copy Item 9 in Form 4.3-4

5 On-site biotreatment with volume based biotreatment BMP (ft^3): 0

Copy Item 3 in Form 4.3-5

6 Flow capacity provided by flow based biotreatment BMP (cfs): 0

Copy Item 6 in Form 4.3-5

7 LID BMP performance criteria are achieved if answer to any of the following is "Yes":

- Full retention of LID DCV with site design HSC, infiltration, or harvest and use BMP: ☒ Yes ☐ No
  If yes, sum of Items 2, 3, and 4 is greater than Item 1
- Combination of on-site retention BMPs for a portion of the LID DCV and volume-based biotreatment BMP that address all pollutants of concern for the remaining LID DCV: ☐ Yes ☒ No
  If yes, a) sum of Items 2, 3, 4, and 5 is greater than Item 1, and Items 2, 3 and 4 are maximized; or b) Item 6 is greater than Form 4.3--5 Item 6 and Items 2, 3 and 4 are maximized
- On-site retention and infiltration is determined to be infeasible and biotreatment BMP provide biotreatment for all pollutants of concern for full LID DCV: ☐ Yes ☒ No
  If yes, Form 4.3-1 Items 7 and 8 were both checked yes

8 If the LID DCV is not achieved by any of these means, then the project may be allowed to develop an alternative compliance plan. Check box that describes the scenario which caused the need for alternative compliance:

- Combination of HSC, retention and infiltration, harvest and use, and biotreatment BMPs provide less than full LID DCV capture: ☐
  *Checked yes for Form 4.3-5 Item 7, Item 6 is zero, and sum of Items 2, 3, 4, and 5 is less than Item 1. If so, apply water quality credits and calculate volume for alternative compliance, V_{alt} = (Item 1 – Item 2 – Item 3 – Item 4 – Item 5) * (100 - Form 2.4-1 Item 2)%*
- An approved Watershed Action Plan (WAP) demonstrates that water quality and hydrologic impacts of urbanization are more effective when managed in at an off-site facility: ☐
  Attach appropriate WAP section, including technical documentation, showing effectiveness comparisons for the project site and regional watershed

Form 4.3-15 Conformance Summary and Alternative Compliance Volume Estimate (DA 4)

1 Total LID DCV for the Project DA-1 (ft^3): 82,833

Copy Item 7 in Form 4.2-1

2 On-site retention with site design hydrologic source control LID BMP (ft^3): 0

Copy Item 30 in Form 4.3-2

3 On-site retention with LID infiltration BMP (ft^3): 82,928

Copy Item 16 in Form 4.3-3

4 On-site retention with LID harvest and use BMP (ft^3): 0

Copy Item 9 in Form 4.3-4

5 On-site biotreatment with volume based biotreatment BMP (ft^3): 0

Copy Item 3 in Form 4.3-5

6 Flow capacity provided by flow based biotreatment BMP (cfs): 0

Copy Item 6 in Form 4.3-5

7 LID BMP performance criteria are achieved if answer to any of the following is "Yes":

- Full retention of LID DCV with site design HSC, infiltration, or harvest and use BMP: ☒ Yes ☐ No
  If yes, sum of Items 2, 3, and 4 is greater than Item 1
- Combination of on-site retention BMPs for a portion of the LID DCV and volume-based biotreatment BMP that address all pollutants of concern for the remaining LID DCV: ☐ Yes ☒ No
  If yes, a) sum of Items 2, 3, 4, and 5 is greater than Item 1, and Items 2, 3 and 4 are maximized; or b) Item 6 is greater than Form 4.3--5 Item 6 and Items 2, 3 and 4 are maximized
- On-site retention and infiltration is determined to be infeasible and biotreatment BMP provide biotreatment for all pollutants of concern for full LID DCV: ☐ Yes ☒ No
  If yes, Form 4.3-1 Items 7 and 8 were both checked yes

8 If the LID DCV is not achieved by any of these means, then the project may be allowed to develop an alternative compliance plan. Check box that describes the scenario which caused the need for alternative compliance:

- Combination of HSC, retention and infiltration, harvest and use, and biotreatment BMPs provide less than full LID DCV capture: ☐
  *Checked yes for Form 4.3-5 Item 7, Item 6 is zero, and sum of Items 2, 3, 4, and 5 is less than Item 1. If so, apply water quality credits and calculate volume for alternative compliance, V_{alt} = (Item 1 – Item 2 – Item 3 – Item 4 – Item 5) * (100 - Form 2.4-1 Item 2)%*
- An approved Watershed Action Plan (WAP) demonstrates that water quality and hydrologic impacts of urbanization are more effective when managed in at an off-site facility: ☐
  Attach appropriate WAP section, including technical documentation, showing effectiveness comparisons for the project site and regional watershed

4.3.6 Hydromodification Control BMP

Use Form 4.3-10 to compute the remaining runoff volume retention, after LID BMP are implemented, needed to address HCOC, and the increase in time of concentration and decrease in peak runoff necessary to meet targets for protection of waterbodies with a potential HCOC. Describe hydromodification control BMP that address HCOC, which may include off-site BMP and/or in-stream controls. Section 5.6 of the TGD for WQMP provides additional details on selection and evaluation of hydromodification control BMP.

Form 4.3-16 Hydromodification Control BMPs (DA 1)

1 Volume reduction needed for HCOC performance criteria (ft^3): 0 *(Form 4.2-2 Item 4 * 0.95) – Form 4.2-2 Item 1*	**2 On-site retention with site design hydrologic source control, infiltration, and harvest and use LID BMP (ft^3):** 0 *Sum of Form 4.3-9 Items 2, 3, and 4 Evaluate option to increase implementation of on-site retention in Forms 4.3-2, 4.3-3, and 4.3-4 in excess of LID DCV toward achieving HCOC volume reduction*
3 Remaining volume for HCOC volume capture (ft^3): 0 *Item 1 – Item 2*	**4 Volume capture provided by incorporating additional on-site or off-site retention BMPs (ft^3):** 0 *Existing downstream BMP may be used to demonstrate additional volume capture (if so, attach to this WQMP a hydrologic analysis showing how the additional volume would be retained during a 2-yr storm event for the regional watershed)*

5 If Item 4 is less than Item 3, incorporate in-stream controls on downstream waterbody segment to prevent impacts due to hydromodification ☐
Attach in-stream control BMP selection and evaluation to this WQMP

6 Is Form 4.2-2 Item 11 less than or equal to 5%: ☐ Yes ☐ No

If yes, HCOC performance criteria is achieved. If no, select one or more mitigation options below:

- Demonstrate increase in time of concentration achieved by proposed LID site design, LID BMP, and additional on-site or off-site retention BMP ☐
  BMP upstream of a waterbody segment with a potential HCOC may be used to demonstrate increased time of concentration through hydrograph attenuation (if so, show that the hydraulic residence time provided in BMP for a 2-year storm event is equal or greater than the addition time of concentration requirement in Form 4.2-4 Item 15)
- Increase time of concentration by preserving pre-developed flow path and/or increase travel time by reducing slope and increasing cross-sectional area and roughness for proposed on-site conveyance facilities ☐
- Incorporate appropriate in-stream controls for downstream waterbody segment to prevent impacts due to hydromodification, in a plan approved and signed by a licensed engineer in the State of California ☐

7 Form 4.2-2 Item 12 less than or equal to 5%: ☐ Yes ☐ No

If yes, HCOC performance criteria is achieved. If no, select one or more mitigation options below:

- Demonstrate reduction in peak runoff achieved by proposed LID site design, LID BMPs, and additional on-site or off-site retention BMPs ☐
  BMPs upstream of a waterbody segment with a potential HCOC may be used to demonstrate additional peak runoff reduction through hydrograph attenuation (if so, attach to this WQMP, a hydrograph analysis showing how the peak runoff would be reduced during a 2-yr storm event)
- Incorporate appropriate in-stream controls for downstream waterbody segment to prevent impacts due to hydromodification, in a plan approved and signed by a licensed engineer in the State of California ☐

4.4 Alternative Compliance Plan (if applicable)

Describe an alternative compliance plan (if applicable) for projects not fully able to infiltrate, harvest and use, or biotreat the DCV via on-site LID practices. A project proponent must develop an alternative compliance plan to address the remainder of the LID DCV. Depending on project type some projects may qualify for water quality credits that can be applied to reduce the DCV that must be treated prior to development of an alternative compliance plan (see Form 2.4-1, Water Quality Credits). Form 4.3-9 Item 8 includes instructions on how to apply water quality credits when computing the DCV that must be met through alternative compliance. Alternative compliance plans may include one or more of the following elements:

- On-site structural treatment control BMP - All treatment control BMP should be located as close to possible to the pollutant sources and should not be located within receiving waters;
- Off-site structural treatment control BMP - Pollutant removal should occur prior to discharge of runoff to receiving waters;
- Urban runoff fund or In-lieu program, if available

Depending upon the proposed alternative compliance plan, approval by the executive officer may or may not be required (see Section 6 of the TGD for WQMP).

Section 5 Inspection and Maintenance Responsibility for Post Construction BMP

All BMP included as part of the project WQMP are required to be maintained through regular scheduled inspection and maintenance (refer to Section 8, Post Construction BMP Requirements, in the TGD for WQMP). Fully complete Form 5-1 summarizing all BMP included in the WQMP. Attach additional forms as needed. The WQMP shall also include a detailed Operation and Maintenance Plan for all BMP and may require a Maintenance Agreement (consult the jurisdiction's LIP). If a Maintenance Agreement is required, it must also be attached to the WQMP.

Form 5-1 BMP Inspection and Maintenance

BMP	Responsible Party(ies)	Inspection/Maintenance Activities Required	Minimum Frequency of Activities
Underground Infiltration Chambers	Owner	The isolator row shall be inspected for debris and sediment accumulations and maintained by a qualified technician and he/she will properly dispose of all wastes and inspect for standing water. A manhole is installed in order to inspect and maintain the inlet row. All entry into the chamber system must be done per OSHA codes to ensure operator and inspector safety. Inspection ports should be checked 48 hours after storm events to see that the water is draining down, at least once each rainy season, following a major storm event. Records shall be maintained by owner to document inspections.	The isolator row shall be inspected semi-annually (by October 1st and February 1st) and cleaned by water-flush and vacuum when solids accumulate to 3" depth. Maintenance to be conducted through service contract with the vendor or equally qualified contractor.
Drain Inserts	Owner	Visually inspect for defects and illegal dumping. Notify proper authorities if illegal dumping has occurred. Using an industrial vacuum, the collected materials shall be removed from the filter basket and disposed of properly. Inspect biosorb hydrocarbon boom and replace as necessary.	Four times per year or following any rain event that would potentially accumulate a large amount of debris in the system. Replace boom twice per year, at a minimum.
Storm Drain Stenciled Message	Owner	Visually inspect for legibility and replace or repaint as necessary.	Annually
N1: Education of Property Owners, Tenants and Occupants on Stormwater BMPs	Owner	Property owner will familiarize him/herself with the educational materials in Attachment "E" and the contents of the WQMP.	Annually (January) for all employees and within 2 months for new hires.
N2: Activity Restrictions	Owner	Activities are restricted to only those for which a BMP has been implemented. The owner shall develop ongoing activity restrictions that include those that have the potential to create adverse impacts on water quality. Activities include, but are not limited to: handling and disposal of contaminants, fertilizer and pesticide application restrictions, litter control and pick-up, and vehicle or equipment repair as well as any other activities that may potentially contribute to water pollution.	Ongoing

Form 5-1 BMP Inspection and Maintenance

N3: Landscape Management BMPs	Owner	Irrigation must be consistent with City's Water Conservation Ordinance. Fertilizer and pesticide usage will be consistent with County Management Guidelines for Use of Fertilizers and Pesticides.	Ongoing
N4: BMP Maintenance	Owner	BMP maintenance, implementation schedules, and responsible parties are included with each specific BMP narrative.	As described in each BMP listed within this form.
N7: Spill Contingency Plan	Owner	Owner/tenant will have a spill contingency plan, a separate document, based on specific site needs.	Ongoing
N10: Uniform Fire Code Implementation	Owner	If applicable, owner will comply with Article 80 of the Uniform Fire Code enforced by the fire protection agency. The facility operators will be educated annually regarding requirements for handling, storage and proper disposal of hazardous substances.	Ongoing
N11: Litter/Debris Control Program	Owner	Contract with their landscape maintenance firm to provide this service during regularly schedule maintenance. They are required to implement trash management and litter control procedures in the common areas aimed at reducing pollution of drainage water.	Weekly
N12: Employee Training	Owner	The owner will ensure that tenants are also familiar with onsite BMPs and necessary maintenance required of the tenants. Owner will check with City and County at least once a year to obtain new or updated educational materials and provide these materials to tenants. Employees shall be trained to clean up spills and participate in ongoing maintenance. The WQMP requires annual employee training and new hires within 2 months.	Annually (January) for all employees and within 2 months for new hires.
N13: Housekeeping of Loading Docks	Owner	Keep all fluids indoors. Clean up spills immediately and keep spills from entering storm drain system. No direct discharges into the storm drain system. Area shall be inspected weekly for proper containment and practices with spills cleaned up immediately and disposed of properly.	Ongoing
N14: Catch Basin Inspection Program	Owner	Monthly inspection by property owner's designee. Inspection consists of immediate repair of any deterioration of the structures and maintenance of drain inserts before and after major rain events. Drain insert maintenance shall be per manufacturer's guidelines.	Monthly inspection and maintain as necessary.
N15: Vacuum Sweeping of Private Streets and Parking Lots	Owner	All landscape maintenance contractors will be required to sweep up all landscape cuttings, mowings and fertilizer materials off paved areas weekly and dispose of properly. Parking areas and drive ways will be swept monthly by sweeping contractor.	Monthly
N17: Comply with all other applicable NPDES permits	Owner	Will comply with Construction General Permit and Industrial General Permit (may apply for No Exposure Certification/NEC).	Ongoing

Form 5-1 BMP Inspection and Maintenance			
S1: Provide storm drain system stenciling and signage (CASQA New Development BMP Handbook SD-13)	Owner	"No Dumping – Drains to River" stencils will be applied. Legibility of stencil will be maintained on a yearly basis.	Annually (January)
S3: Design and construct trash and waste storage areas to reduce pollution introduction (CASQA New Development BMP Handbook SD-32)	Owner	Paved with an impervious surface, designed not to allow run-on from adjoining areas, designed to divert drainage from adjoining roofs and pavements diverted around the area, screened or walled to prevent off-site transport of trash. Detail to be provided once available.	Ongoing
S4: Use efficient irrigation systems & landscape design, water conservation, smart controllers, and source control (Statewide Model Landscape Ordinance; CASQA New Development BMP Handbook SD-12)	Owner	Irrigation systems shall include reducers or shutoff valves triggered by a pressure drop to control water loss in the event of broken sprinkler heads or lines. Timers will be used to avoid over watering and watering cycles and duration shall be adjusted seasonally by the landscape maintenance contractor. The landscaping areas will be grouped with plants that have similar water requirements. Native or drought tolerant species shall also be used where appropriate to reduce excess irrigation runoff and promote surface filtration.	Adjust watering cycles and duration seasonally / quarterly (Oct, Jan, Apr, and Jul).

Section 6 WQMP Attachments

6.1 Site Plan and Drainage Plan

Include a site plan and drainage plan sheet set containing the following minimum information:

- Project location
- Site boundary
- Land uses and land covers, as applicable
- Suitability/feasibility constraints
- Structural Source Control BMP locations
- Site Design Hydrologic Source Control BMP locations
- LID BMP details
- Drainage delineations and flow information
- Drainage connections

See Attachment C for Site and Drainage Plan.

6.2 Electronic Data Submittal

Minimum requirements include submittal of PDF exhibits in addition to hard copies. Format must not require specialized software to open. If the local jurisdiction requires specialized electronic document formats (consult the LIP), this section will describe the contents (e.g., layering, nomenclature, geo-referencing, etc.) of these documents so that they may be interpreted efficiently and accurately.

6.3 Post Construction

Attach all O&M Plans and Memorandum of Agreement for BMP to the WQMP (Attachment D).

6.4 Other Supporting Documentation

- BMP Educational Materials (Attachment E)
- Soil/Infiltration Report (Attachment F)
- BMP Maintenance Material (Attachment G)
- Conditions of Approval (Attachment H)
- Class V Injection Well Registration (Attachment I)
- Activity Restrictions (Attachment J)

Attachment A
Existing Condition Site Photos

8830
NO PARKING IN DRIVEWAY
WHOLESALE ONLY

Attachment B
BMP Design Calculations & Supporting Documentation

General Information
Homepage
Progress Reports
FAQ
Glossary

Precipitation Frequency
Data Server
GIS Grids
Maps
Time Series
Temporals
Documents

Probable Maximum Precipitation
Documents

Miscellaneous
Publications
Storm Analysis
Record Precipitation

Contact Us
Inquiries

NOAA ATLAS 14 POINT PRECIPITATION FREQUENCY ESTIMATES: CA

Data description

Data type: Precipitation depth **Units:** English **Time series type:** Partial duration

Select location

1) Manually:

a) By location (decimal degrees, use "-" for S and W): Latitude: 34.093781 Longitude: -117.61539 Submit

b) By station (list of CA stations): Select station

c) By address Search

2) Use map (if ESRI interactive map is not loading, try adding the host: **https://js.arcgis.com/** to the firewall, or contact us at hdsc.questions@noaa.gov):

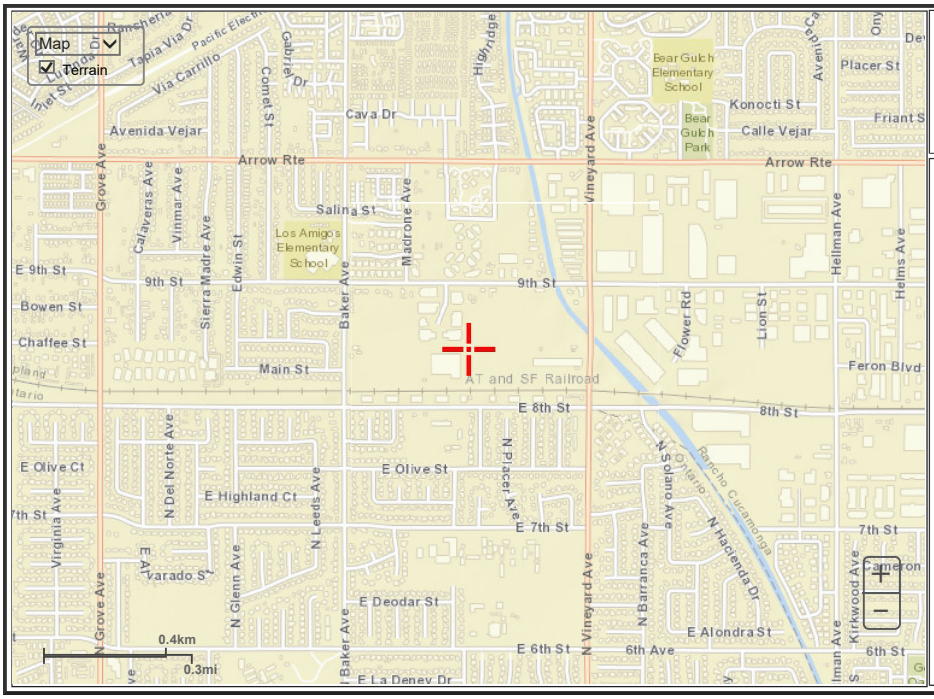

a) Select location
Move crosshair or double click

b) Click on station icon
Show stations on map

Location information:
Name: Rancho Cucamonga, California, USA*
Latitude: 34.0938°
Longitude: -117.6154°
Elevation: 1139.03 ft **

* Source: ESRI Maps
** Source: USGS

POINT PRECIPITATION FREQUENCY (PF) ESTIMATES

WITH 90% CONFIDENCE INTERVALS AND SUPPLEMENTARY INFORMATION
NOAA Atlas 14, Volume 6, Version 2

PF tabular PF graphical Supplementary information Print page

PDS-based precipitation frequency estimates with 90% confidence intervals (in inches)[1]

Duration	Average recurrence interval (years) 1	2	5	10	25	50	100	200	500	1000
5-min	**0.119** (0.099-0.145)	**0.159** (0.132-0.193)	**0.208** (0.173-0.253)	**0.247** (0.203-0.303)	**0.297** (0.236-0.378)	**0.334** (0.260-0.434)	**0.371** (0.281-0.494)	**0.407** (0.300-0.559)	**0.455** (0.321-0.651)	**0.491** (0.334-0.728)
10-min	**0.171** (0.143-0.207)	**0.228** (0.190-0.276)	**0.298** (0.248-0.363)	**0.354** (0.291-0.434)	**0.426** (0.339-0.541)	**0.479** (0.373-0.622)	**0.532** (0.403-0.708)	**0.584** (0.430-0.801)	**0.652** (0.460-0.934)	**0.703** (0.479-1.04)
15-min	**0.207** (0.172-0.251)	**0.275** (0.229-0.334)	**0.361** (0.300-0.439)	**0.428** (0.352-0.525)	**0.515** (0.410-0.654)	**0.580** (0.451-0.753)	**0.643** (0.488-0.856)	**0.706** (0.520-0.968)	**0.789** (0.557-1.13)	**0.850** (0.579-1.26)
30-min	**0.311** (0.259-0.377)	**0.414** (0.345-0.502)	**0.543** (0.451-0.660)	**0.644** (0.530-0.790)	**0.775** (0.616-0.985)	**0.872** (0.679-1.13)	**0.967** (0.734-1.29)	**1.06** (0.783-1.46)	**1.19** (0.837-1.70)	**1.28** (0.871-1.90)
60-min	**0.463** (0.386-0.561)	**0.617** (0.513-0.748)	**0.808** (0.671-0.983)	**0.959** (0.789-1.18)	**1.15** (0.918-1.47)	**1.30** (1.01-1.69)	**1.44** (1.09-1.92)	**1.58** (1.17-2.17)	**1.77** (1.25-2.53)	**1.91** (1.30-2.83)
2-hr	**0.698** (0.582-0.846)	**0.921** (0.767-1.12)	**1.20** (0.994-1.46)	**1.41** (1.16-1.73)	**1.69** (1.34-2.14)	**1.89** (1.47-2.45)	**2.09** (1.58-2.78)	**2.28** (1.68-3.13)	**2.53** (1.79-3.63)	**2.72** (1.85-4.03)
3-hr	**0.879** (0.733-1.07)	**1.16** (0.962-1.40)	**1.50** (1.24-1.82)	**1.76** (1.45-2.16)	**2.10** (1.67-2.67)	**2.35** (1.83-3.05)	**2.59** (1.96-3.45)	**2.82** (2.08-3.87)	**3.13** (2.21-4.48)	**3.35** (2.28-4.97)
6-hr	**1.26** (1.05-1.52)	**1.65** (1.37-2.00)	**2.13** (1.77-2.59)	**2.50** (2.06-3.07)	**2.98** (2.37-3.78)	**3.32** (2.59-4.32)	**3.66** (2.78-4.88)	**3.99** (2.94-5.47)	**4.42** (3.12-6.33)	**4.73** (3.22-7.02)
12-hr	**1.65**	**2.17**	**2.81**	**3.31**	**3.95**	**4.42**	**4.88**	**5.33**	**5.91**	**6.34**

	(1.38-2.00)	(1.80-2.63)	(2.33-3.42)	(2.72-4.06)	(3.14-5.01)	(3.44-5.74)	(3.70-6.49)	(3.92-7.30)	(4.17-8.46)	(4.32-9.41)
24-hr	**2.25** (1.99-2.59)	**2.99** (2.64-3.45)	**3.91** (3.45-4.52)	**4.63** (4.05-5.40)	**5.57** (4.72-6.72)	**6.27** (5.20-7.71)	**6.95** (5.63-8.76)	**7.63** (6.02-9.89)	**8.53** (6.45-11.5)	**9.19** (6.72-12.8)
2-day	**2.73** (2.42-3.15)	**3.70** (3.27-4.27)	**4.94** (4.35-5.71)	**5.92** (5.18-6.91)	**7.23** (6.12-8.71)	**8.20** (6.81-10.1)	**9.18** (7.44-11.6)	**10.2** (8.01-13.2)	**11.5** (8.68-15.5)	**12.5** (9.13-17.4)
3-day	**2.93** (2.60-3.38)	**4.04** (3.57-4.66)	**5.46** (4.82-6.32)	**6.61** (5.78-7.71)	**8.14** (6.89-9.81)	**9.30** (7.72-11.4)	**10.5** (8.48-13.2)	**11.7** (9.19-15.1)	**13.3** (10.0-17.9)	**14.5** (10.6-20.2)
4-day	**3.17** (2.80-3.65)	**4.41** (3.90-5.09)	**6.01** (5.30-6.96)	**7.31** (6.39-8.53)	**9.05** (7.67-10.9)	**10.4** (8.61-12.8)	**11.7** (9.50-14.8)	**13.1** (10.3-17.0)	**15.0** (11.3-20.2)	**16.4** (12.0-22.9)
7-day	**3.64** (3.22-4.20)	**5.15** (4.55-5.94)	**7.11** (6.27-8.22)	**8.70** (7.61-10.1)	**10.9** (9.19-13.1)	**12.5** (10.4-15.4)	**14.2** (11.5-17.9)	**15.9** (12.6-20.6)	**18.3** (13.8-24.7)	**20.1** (14.7-28.1)
10-day	**3.93** (3.48-4.53)	**5.60** (4.95-6.46)	**7.78** (6.86-9.01)	**9.57** (8.37-11.2)	**12.0** (10.2-14.5)	**13.9** (11.5-17.1)	**15.8** (12.8-19.9)	**17.8** (14.0-23.0)	**20.5** (15.5-27.6)	**22.6** (16.5-31.5)
20-day	**4.71** (4.17-5.43)	**6.79** (6.00-7.83)	**9.55** (8.42-11.0)	**11.8** (10.3-13.8)	**15.0** (12.7-18.0)	**17.4** (14.5-21.5)	**20.0** (16.2-25.2)	**22.7** (17.8-29.3)	**26.3** (19.9-35.5)	**29.3** (21.4-40.8)
30-day	**5.53** (4.90-6.38)	**7.95** (7.03-9.17)	**11.2** (9.88-13.0)	**13.9** (12.2-16.2)	**17.7** (15.0-21.3)	**20.7** (17.2-25.5)	**23.8** (19.3-30.0)	**27.1** (21.4-35.2)	**31.8** (24.0-42.9)	**35.5** (25.9-49.5)
45-day	**6.68** (5.91-7.70)	**9.46** (8.37-10.9)	**13.3** (11.7-15.4)	**16.5** (14.4-19.2)	**21.0** (17.8-25.4)	**24.7** (20.5-30.4)	**28.5** (23.1-36.0)	**32.7** (25.7-42.3)	**38.5** (29.1-51.9)	**43.2** (31.6-60.3)
60-day	**7.83** (6.93-9.02)	**10.9** (9.64-12.6)	**15.1** (13.4-17.5)	**18.8** (16.4-21.9)	**24.0** (20.3-28.9)	**28.2** (23.4-34.6)	**32.6** (26.4-41.1)	**37.5** (29.5-48.5)	**44.4** (33.6-59.9)	**50.1** (36.6-69.9)

[1] Precipitation frequency (PF) estimates in this table are based on frequency analysis of partial duration series (PDS).

Numbers in parenthesis are PF estimates at lower and upper bounds of the 90% confidence interval. The probability that precipitation frequency estimates (for a given duration and average recurrence interval) will be greater than the upper bound (or less than the lower bound) is 5%. Estimates at upper bounds are not checked against probable maximum precipitation (PMP) estimates and may be higher than currently valid PMP values.

Please refer to NOAA Atlas 14 document for more information.

Estimates from the table in CSV format: Precipitation frequency estimates Submit

Main Link Categories:
Home | OWP

US Department of Commerce
National Oceanic and Atmospheric Administration
National Weather Service
Office of Water Prediction (OWP)
1325 East West Highway
Silver Spring, MD 20910
Page Author: HDSC webmaster
Page last modified: April 21, 2017

Map Disclaimer
Disclaimer
Credits
Glossary

Privacy Poli
About
Career Opportuniti

Worksheet H: Factor of Safety and Design Infiltration Rate Worksheet
Applicable to: DA 1 DMA A

Factor Category		Factor Description	Assigned Weight (w)	Factor Value (v)	Product (p) p = w x v
A	Suitability Assessment	Soil assessment methods	0.25	1	0.25
		Predominant soil texture	0.25	1	0.25
		Site soil variability	0.25	1	0.25
		Depth to groundwater / impervious layer	0.25	1	0.25
		Suitability Assessment Safety Factor, $S_A = \Sigma p$			1.00
B	Design	Tributary area size	0.25	3	0.75
		Level of pretreatment/ expected sediment loads	0.25	2	0.50
		Redundancy	0.25	3	0.75
		Compaction during construction	0.25	1	0.25
		Design Safety Factor, $S_B = \Sigma p$			2.25

Combined Safety Factor, $S_{TOT} = S_A \times S_B$	2.25
Measured Infiltration Rate, inch/hr, K_M (corrected for test-specific bias)	7.6
Design Infiltration Rate, in/hr, $K_{DESIGN} = K_M / S_{TOT}$	3.37

Supporting Data

Briefly describe infiltration test and provide reference to test forms:

A double-ring infiltrometer was conducted at the location of the infiltration facility to support a minimum measured infiltration result of 7.6 in/hr. The design infiltration rate is 3.37 in/hr after applying the appropriate safety factor. This design rate is suitable for infiltration facilities.

Level of Pretreatment: The project proposes to utilize drain inserts as pretreatment to the BMPs. It appears that this would be considered a "high concern" since the land use will have high traffic areas. However, the BMP treats runoff from relatively cleans surfaces such as rooftops, which makes up a majority of the project, and would be considered a “low concern.” With this rationale, we will utilize a “medium concern” for consideration of the pretreatment factor.

Note: The minimum combined adjustment factor shall not be less than 2.0 and the maximum combined adjustment factor shall not exceed 9.0.

Worksheet H: Factor of Safety and Design Infiltration Rate Worksheet
Applicable to: DA 2 DMA A

Factor Category		Factor Description	Assigned Weight (w)	Factor Value (v)	Product (p) p = w x v
A	Suitability Assessment	Soil assessment methods	0.25	1	0.25
		Predominant soil texture	0.25	1	0.25
		Site soil variability	0.25	1	0.25
		Depth to groundwater / impervious layer	0.25	1	0.25
		Suitability Assessment Safety Factor, $S_A = \Sigma p$			1.00
B	Design	Tributary area size	0.25	2	0.50
		Level of pretreatment/ expected sediment loads	0.25	2	0.50
		Redundancy	0.25	3	0.75
		Compaction during construction	0.25	1	0.25
		Design Safety Factor, $S_B = \Sigma p$			2.00

Combined Safety Factor, $S_{TOT} = S_A \times S_B$	2.00
Measured Infiltration Rate, inch/hr, K_M (corrected for test-specific bias)	3.0
Design Infiltration Rate, in/hr, $K_{DESIGN} = K_M / S_{TOT}$	1.5

Supporting Data

Briefly describe infiltration test and provide reference to test forms:

A double-ring infiltrometer **will be** conducted at the location of the infiltration facility to support a minimum measured infiltration result of 3.0 in/hr. The design infiltration rate is 1.5 in/hr after applying the appropriate safety factor. This design rate is suitable for infiltration facilities.

Level of Pretreatment: The project proposes to utilize drain inserts as pretreatment to the BMPs. It appears that this would be considered a "high concern" since the land use will have high traffic areas. However, the BMP treats runoff from relatively cleans surfaces such as rooftops, which makes up a majority of the project, and would be considered a “low concern.” With this rationale, we will utilize a “medium concern” for consideration of the pretreatment factor.

Note: The minimum combined adjustment factor shall not be less than 2.0 and the maximum combined adjustment factor shall not exceed 9.0.

Worksheet H: Factor of Safety and Design Infiltration Rate Worksheet
Applicable to: DA 3 DMA A

Factor Category		Factor Description	Assigned Weight (w)	Factor Value (v)	Product (p) p = w x v
A	Suitability Assessment	Soil assessment methods	0.25	1	0.25
		Predominant soil texture	0.25	1	0.25
		Site soil variability	0.25	1	0.25
		Depth to groundwater / impervious layer	0.25	1	0.25
		Suitability Assessment Safety Factor, $S_A = \Sigma p$			1.00
B	Design	Tributary area size	0.25	3	0.75
		Level of pretreatment/ expected sediment loads	0.25	2	0.50
		Redundancy	0.25	3	0.75
		Compaction during construction	0.25	1	0.25
		Design Safety Factor, $S_B = \Sigma p$			2.25

Combined Safety Factor, $S_{TOT} = S_A \times S_B$	2.25
Measured Infiltration Rate, inch/hr, K_M (corrected for test-specific bias)	13.0
Design Infiltration Rate, in/hr, $K_{DESIGN} = K_M / S_{TOT}$	5.77

Supporting Data

Briefly describe infiltration test and provide reference to test forms:

A double-ring infiltrometer was conducted at the location of the infiltration facility to support a minimum measured infiltration result of 13.0 in/hr. The design infiltration rate is 5.77 in/hr after applying the appropriate safety factor. This design rate is suitable for infiltration facilities.

Level of Pretreatment: The project proposes to utilize drain inserts as pretreatment to the BMPs. It appears that this would be considered a "high concern" since the land use will have high traffic areas. However, the BMP treats runoff from relatively cleans surfaces such as rooftops, which makes up a majority of the project, and would be considered a “low concern.” With this rationale, we will utilize a “medium concern” for consideration of the pretreatment factor.

Note: The minimum combined adjustment factor shall not be less than 2.0 and the maximum combined adjustment factor shall not exceed 9.0.

Worksheet H: Factor of Safety and Design Infiltration Rate Worksheet
Applicable to: DA 4 DMA A

Factor Category		Factor Description	Assigned Weight (w)	Factor Value (v)	Product (p) p = w x v
A	Suitability Assessment	Soil assessment methods	0.25	1	0.25
		Predominant soil texture	0.25	1	0.25
		Site soil variability	0.25	1	0.25
		Depth to groundwater / impervious layer	0.25	1	0.25
		Suitability Assessment Safety Factor, $S_A = \Sigma p$			1.00
B	Design	Tributary area size	0.25	3	0.75
		Level of pretreatment/ expected sediment loads	0.25	2	0.50
		Redundancy	0.25	3	0.75
		Compaction during construction	0.25	1	0.25
		Design Safety Factor, $S_B = \Sigma p$			2.25

Combined Safety Factor, $S_{TOT} = S_A \times S_B$	2.25
Measured Infiltration Rate, inch/hr, K_M (corrected for test-specific bias)	5.7
Design Infiltration Rate, in/hr, $K_{DESIGN} = K_M / S_{TOT}$	2.53

Supporting Data

Briefly describe infiltration test and provide reference to test forms:

A double-ring infiltrometer was conducted at the location of the infiltration facility to support a minimum measured infiltration result of 5.7 in/hr. The design infiltration rate is 2.53 in/hr after applying the appropriate safety factor. This design rate is suitable for infiltration facilities.

Level of Pretreatment: The project proposes to utilize drain inserts as pretreatment to the BMPs. It appears that this would be considered a "high concern" since the land use will have high traffic areas. However, the BMP treats runoff from relatively cleans surfaces such as rooftops, which makes up a majority of the project, and would be considered a “low concern.” With this rationale, we will utilize a “medium concern” for consideration of the pretreatment factor.

Note: The minimum combined adjustment factor shall not be less than 2.0 and the maximum combined adjustment factor shall not exceed 9.0.

VOLUME-BASED BMP DESIGN

$C_{BMP} = 0.858(imp)^3 - 0.78(imp)^2 + 0.774(imp) + 0.04$
P6 = (0.617)(1.4807) = 0.914 inches
$P0 = (1.963)(C_{BMP})(0.914)$
DCV = (P0 * Area) / 12

DA 1 DMA A – STC #1

Region		Valley	
Drainage Area (acres)		12.75	acres
Drainage Area (sq-ft)		**555,390**	sq-ft
Impervious Coeff	i =	0.95	< 1.0
Runoff Coeff	**C =**	**0.807**	
1-hr 2-yr from NOAA		0.617	
P6 Coeff		**1.4807**	
Mean 6-hr (P6)		**0.914**	
Drawdown Rate (a)		1.963	
DCV		**66,981**	cu-ft
DCV		**1.538**	acre-ft

StormTech
Detention • Retention • Recharge
Subsurface Stormwater Management™

MC-4500 Site Calculator

Project Information:

Project Name:	9th Street and Vineyard - DA 1 DMA A
Location:	Rancho Cucamonga, CA
Date:	9/27/2019
Engineer:	
StormTech RPM:	

System Requirements

Units		Imperial	
Required Storage Volume		66981	CF
Stone Porosity (Industry Standard = 40%)		40	%
Stone Above Chambers	(12 inch min.)	12	inches
Stone Foundation Depth	(9 inch min.)	9	inches
Average Cover over Chambers	(24 inch min.)	24	inches
Bed size controlled by WIDTH or LENGTH?		WIDTH	
Limiting WIDTH or LENGTH dimension		50	feet
Storage Volume per Chamber		162.6	CF
Storage Volume per End Cap		108.6	CF

System Sizing

Number of Chambers Required	406	each
Number of End Caps Required	10	each
Bed Size (including perimeter stone)	15,515	square feet
Stone Required (including perimeter stone)	3209	tons
Volume of Excavation	4453	cubic yards
Non-woven Filter Fabric Required (20% Safety Factor)	4828	square yards
Length of Isolator Row	337.2	feet
Woven Isolator Row Fabric (20% Safety Factor)	926	square yards
Installed Storage Volume	67,102	cubic feet

Controlled by Width (Rows)

Maximum Width =				50	feet
1	row of	82	chambers		
4	row of	81	chambers		
Maximum Length =				337.2	feet
Maximum Width =				46.7	feet

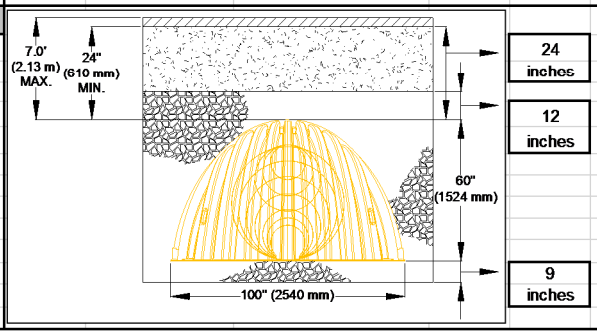

Design infiltration rate = 3.37 in/hr

d_{max} = Design infiltration rate x 48 hours = 3.37 in/hr x 48 hrs = 161.76 inches

d_{BMP} = [(12 inches + 9 inches) x 0.40] + 60 inches = 68.4 inches

$d_{max} > d_{BMP}$

DA 2 DMA A – STC #2

Region		Valley	
Drainage Area (acres)		6.05	acres
Drainage Area (sq-ft)		263,538	sq-ft
Impervious Coeff	i =	0.95	< 1.0
Runoff Coeff	**C =**	0.807	
1-hr 2-yr from NOAA		0.617	
P6 Coeff		1.4807	
Mean 6-hr (P6)		0.914	
Drawdown Rate (a)		1.963	
DCV		31,783	cu-ft
DCV		0.730	acre-ft

StormTech
Detention • Retention • Recharge
Subsurface Stormwater Management™

MC-4500 Site Calculator

Project Information:

Project Name:	9th Street and Vineyard - DA 2 DMA A
Location:	Rancho Cucamonga, CA
Date:	9/27/2019
Engineer:	
StormTech RPM:	

System Requirements

Units		Imperial	
Required Storage Volume		31783	CF
Stone Porosity (Industry Standard = 40%)		40	%
Stone Above Chambers	(12 inch min.)	12	inches
Stone Foundation Depth	(9 inch min.)	9	inches
Average Cover over Chambers	(24 inch min.)	24	inches
Bed size controlled by WIDTH or LENGTH?		WIDTH	
Limiting WIDTH or LENGTH dimension		45	feet
Storage Volume per Chamber		162.6	CF
Storage Volume per End Cap		108.6	CF

System Sizing

Number of Chambers Required	191	each
Number of End Caps Required	8	each
Bed Size (including perimeter stone)	7,474	square feet
Stone Required (including perimeter stone)	1566	tons
Volume of Excavation	2145	cubic yards
Non-woven Filter Fabric Required (20% Safety Factor)	2421	square yards
Length of Isolator Row	200.3	feet
Woven Isolator Row Fabric (20% Safety Factor)	550	square yards
Installed Storage Volume	31,925	cubic feet

Controlled by Width (Rows)

Maximum Width =			45	feet
3	rows of	48	chambers	
1	row of	47	chambers	
Maximum Length =			200.3	feet
Maximum Width =			37.6	feet

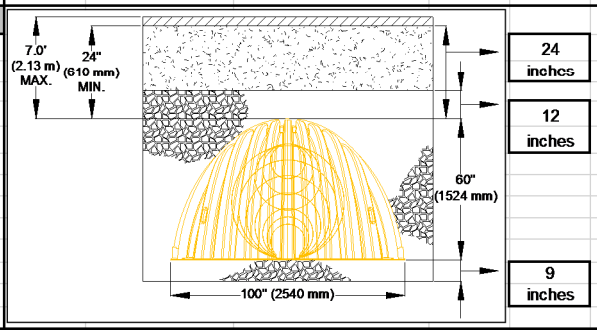

Design infiltration rate = 1.5 in/hr

d_{max} = Design infiltration rate x 48 hours = 1.5 in/hr x 48 hrs = 72 inches

d_{BMP} = [(12 inches + 9 inches) x 0.40] + 60 inches = 68.4 inches

$d_{max} > d_{BMP}$

DA 3 DMA A – STC #3

Region		Valley	
Drainage Area (acres)		12.95	acres
Drainage Area (sq-ft)		564,102	sq-ft
Impervious Coeff	i =	0.95	< 1.0
Runoff Coeff	**C =**	0.807	
1-hr 2-yr from NOAA		0.617	
P6 Coeff		1.4807	
Mean 6-hr (P6)		0.914	
Drawdown Rate (a)		1.963	
DCV		68,032	cu-ft
DCV		1.562	acre-ft

StormTech
Detention • Retention • Recharge
Subsurface Stormwater Management™

MC-4500 Site Calculator

Project Information:

Project Name:	9th Street and Vineyard - DA 3 DMA A
Location:	Rancho Cucamonga, CA
Date:	9/27/2019
Engineer:	
StormTech RPM:	

System Requirements

Units		Imperial	
Required Storage Volume		68032	CF
Stone Porosity (Industry Standard = 40%)		40	%
Stone Above Chambers	(12 inch min.)	12	inches
Stone Foundation Depth	(9 inch min.)	9	inches
Average Cover over Chambers	(24 inch min.)	24	inches
Bed size controlled by WIDTH or LENGTH?		WIDTH	
Limiting WIDTH or LENGTH dimension		50	feet
Storage Volume per Chamber		162.6	CF
Storage Volume per End Cap		108.6	CF

System Sizing

Number of Chambers Required	412	each
Number of End Caps Required	10	each
Bed Size (including perimeter stone)	15,758	square feet
Stone Required (including perimeter stone)	3262	tons
Volume of Excavation	4523	cubic yards
Non-woven Filter Fabric Required (20% Safety Factor)	4900	square yards
Length of Isolator Row	341.2	feet
Woven Isolator Row Fabric (20% Safety Factor)	937	square yards
Installed Storage Volume	68,077	cubic feet

Controlled by Width (Rows)

Maximum Width =			50	feet
2	rows of	83	chambers	
3	row of	82	chambers	
Maximum Length =			341.2	feet
Maximum Width =			46.7	feet

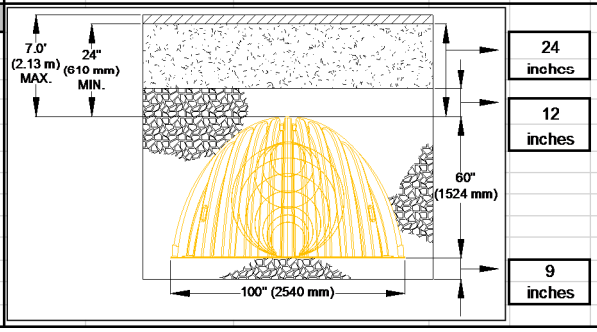

Design infiltration rate = 5.77 in/hr

d_{max} = Design infiltration rate x 48 hours = 5.77 in/hr x 48 hrs = 276.96 inches

d_{BMP} = [(12 inches + 9 inches) x 0.40] + 60 inches = 68.4 inches

$d_{max} > d_{BMP}$

DA 4 DMA A – STC #4

Region		Valley	
Drainage Area (acres)		14.85	acres
Drainage Area (sq-ft)		646,866	sq-ft
Impervious Coeff	i =	0.95	< 1.0
Runoff Coeff	**C =**	0.807	
1-hr 2-yr from NOAA		0.617	
P6 Coeff		1.4807	
Mean 6-hr (P6)		0.914	
Drawdown Rate (a)		1.963	
DCV		78,013	cu-ft
DCV		1.791	acre-ft

DA 4 DMA A – STC #4 – R/W IMPROVEMENTS

Region		Valley	
Drainage Area (acres)		0.83	acres
Drainage Area (sq-ft)		36,155	sq-ft
Impervious Coeff	i =	1	< 1.0
Runoff Coeff	**C =**	0.892	
1-hr 2-yr from NOAA		0.617	
P6 Coeff		1.4807	
Mean 6-hr (P6)		0.914	
Drawdown Rate (a)		1.963	
DCV		4,820	cu-ft
DCV		0.111	acre-ft

DCV = 78,013 CF + 4,820 CF = 82,833 CF

StormTech
Detention • Retention • Recharge
Subsurface Stormwater Management™

MC-4500 Site Calculator

Project Information:

Project Name:	9th Street and Vineyard - DA 4 DMA A
Location:	Rancho Cucamonga, CA
Date:	9/27/2019
Engineer:	
StormTech RPM:	

System Requirements

Units		Imperial	
Required Storage Volume		82833	CF
Stone Porosity (Industry Standard = 40%)		40	%
Stone Above Chambers	(12 inch min.)	12	inches
Stone Foundation Depth	(9 inch min.)	9	inches
Average Cover over Chambers	(24 inch min.)	24	inches
Bed size controlled by WIDTH or LENGTH?		WIDTH	
Limiting WIDTH or LENGTH dimension		60	feet
Storage Volume per Chamber		162.6	CF
Storage Volume per End Cap		108.6	CF

System Sizing

Number of Chambers Required	502	each
Number of End Caps Required	12	each
Bed Size (including perimeter stone)	19,136	square feet
Stone Required (including perimeter stone)	3952	tons
Volume of Excavation	5493	cubic yards
Non-woven Filter Fabric Required (20% Safety Factor)	5825	square yards
Length of Isolator Row	345.2	feet
Woven Isolator Row Fabric (20% Safety Factor)	948	square yards
Installed Storage Volume	82,928	cubic feet

Controlled by Width (Rows)

Maximum Width =				60	feet
4	rows of	84	chambers		
2	row of	83	chambers		
Maximum Length =				345.2	feet
Maximum Width =				55.7	feet

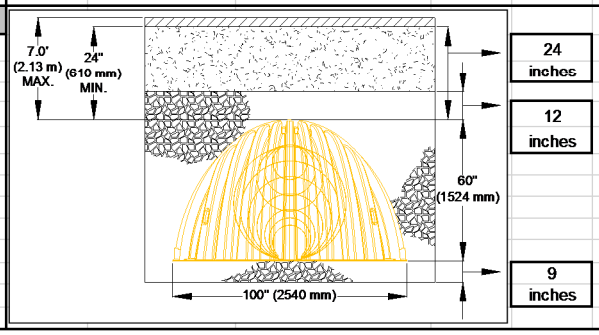

Design infiltration rate = 2.53 in/hr

d_{max} = Design infiltration rate x 48 hours = 2.53 in/hr x 48 hrs = 121.44 inches

d_{BMP} = [(12 inches + 9 inches) x 0.40] + 60 inches = 68.4 inches

$d_{max} > d_{BMP}$

Attachment C
Site and Drainage Plan

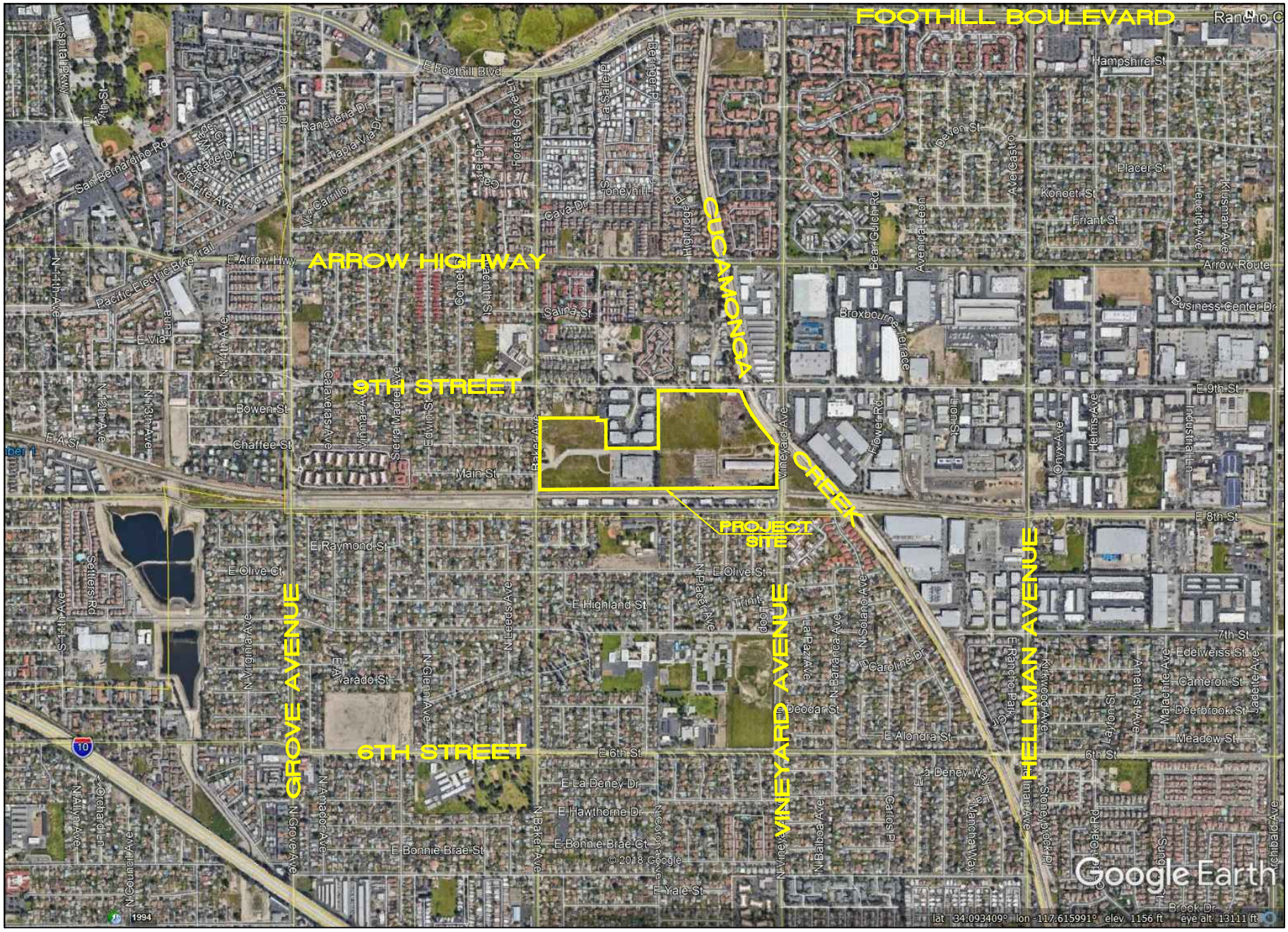

Last Update: 10/18/19
O:\3700-3799\3744\3744VICMAP.dwg

Thienes Engineering, Inc.
CIVIL ENGINEERING • LAND SURVEYING
14349 FIRESTONE BOULEVARD
LA MIRADA, CALIFORNIA 90638
PH.(714)521-4811 FAX(714)521-4173

"VICINITY MAP"

FOR

9TH AND VINEYARD

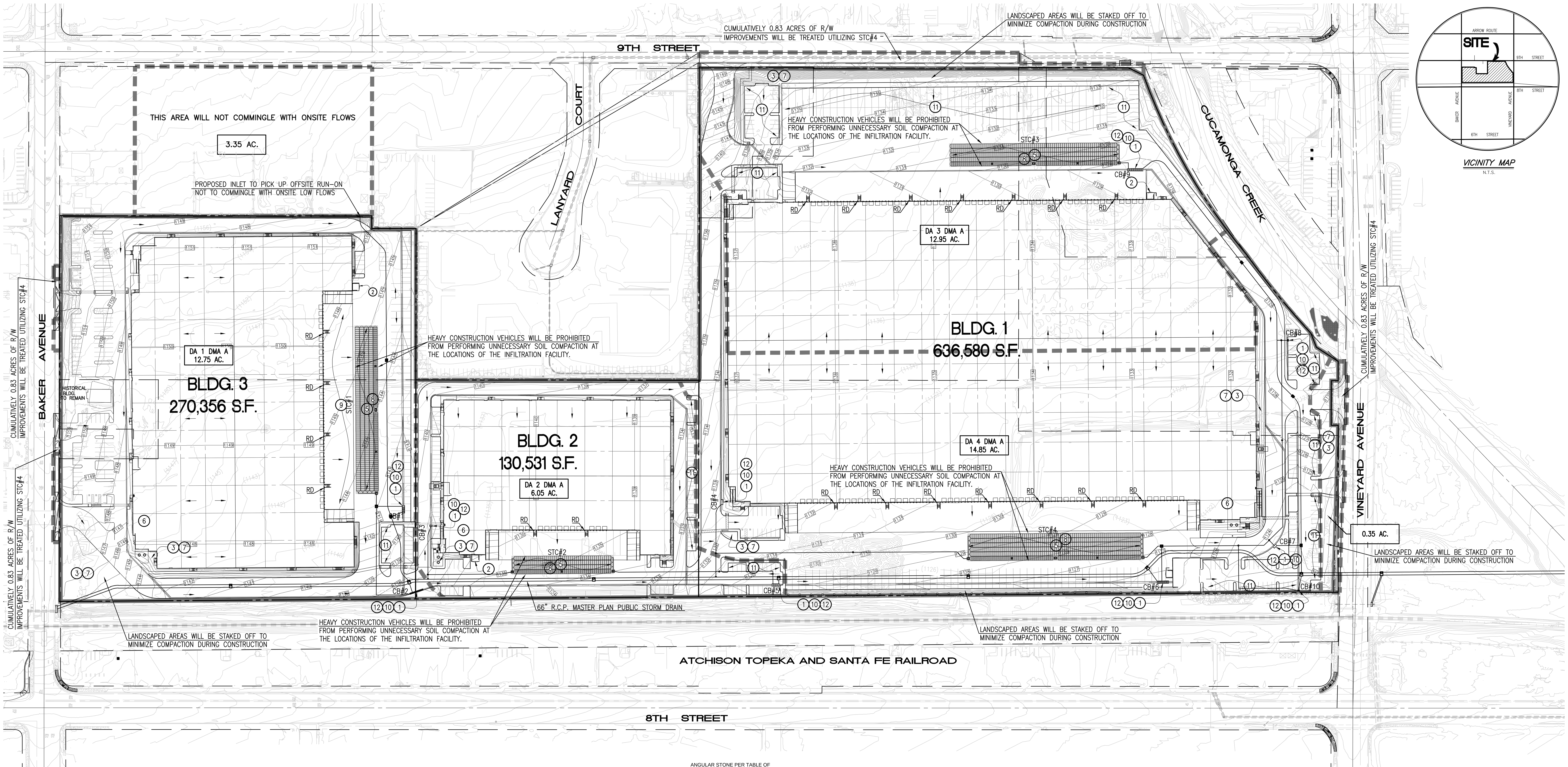

LEGEND

1. S1–STORM DRAIN SYSTEM SIGNS "NO DUMPING – DRAINS TO WATERWAY"
2. S3–TRASH ENCLOSURE
3. S4–EFFICIENT IRRIGATION
4. NOT USED
5. MC–4500 STORMTECH CHAMBERS
6. N1–EDUCATIONAL MATERIALS
7. N3–LANDSCAPE MANAGEMENT BMPS
8. N4–BMP MAINTENANCE
9. N13–HOUSEKEEPING OF LOADING DOCKS
10. N14–CATCH BASIN INSPECTION
11. N15–SWEEPING OF PARKING LOTS
12. DRAIN INSERT(S)
13. NOT USED

NOTES:

RD	ROOF DRAIN
STC	STORMTECH CHAMBERS
	BOUNDARY
	DRAINAGE AREAS
	FLOW DIRECTION
	INFILTRATION FACILITY LOCATION

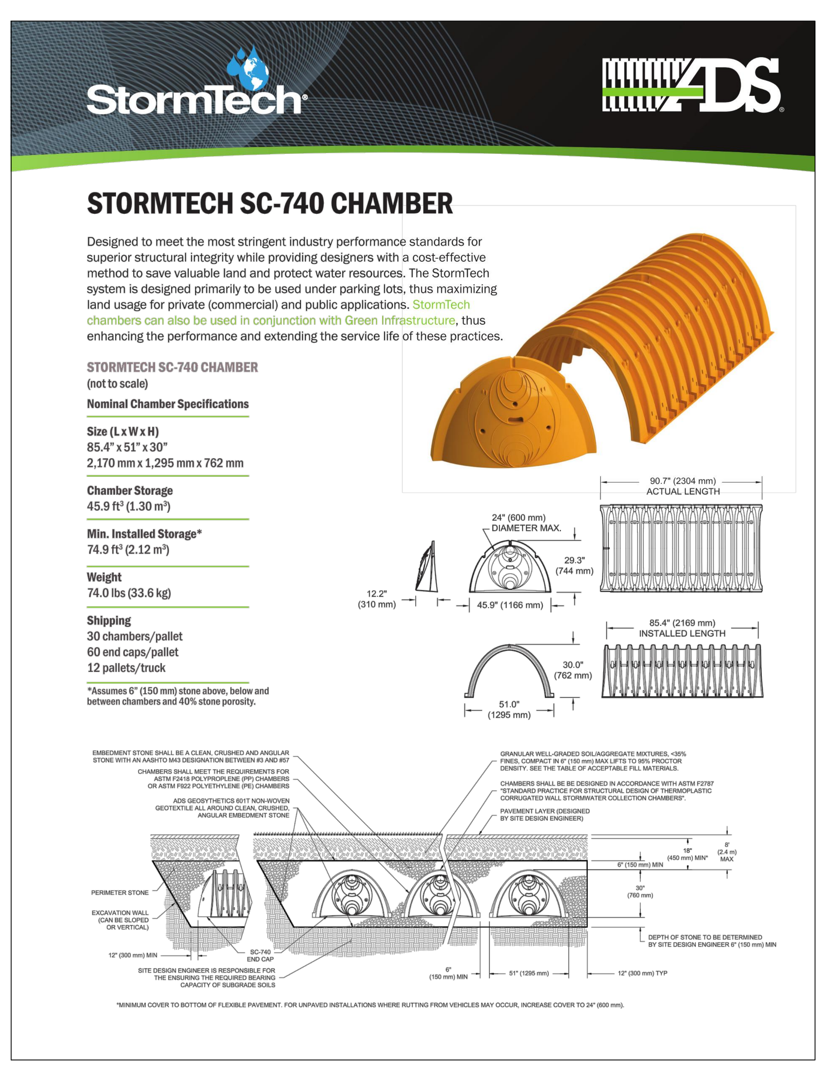

STORMTECH MC-4500

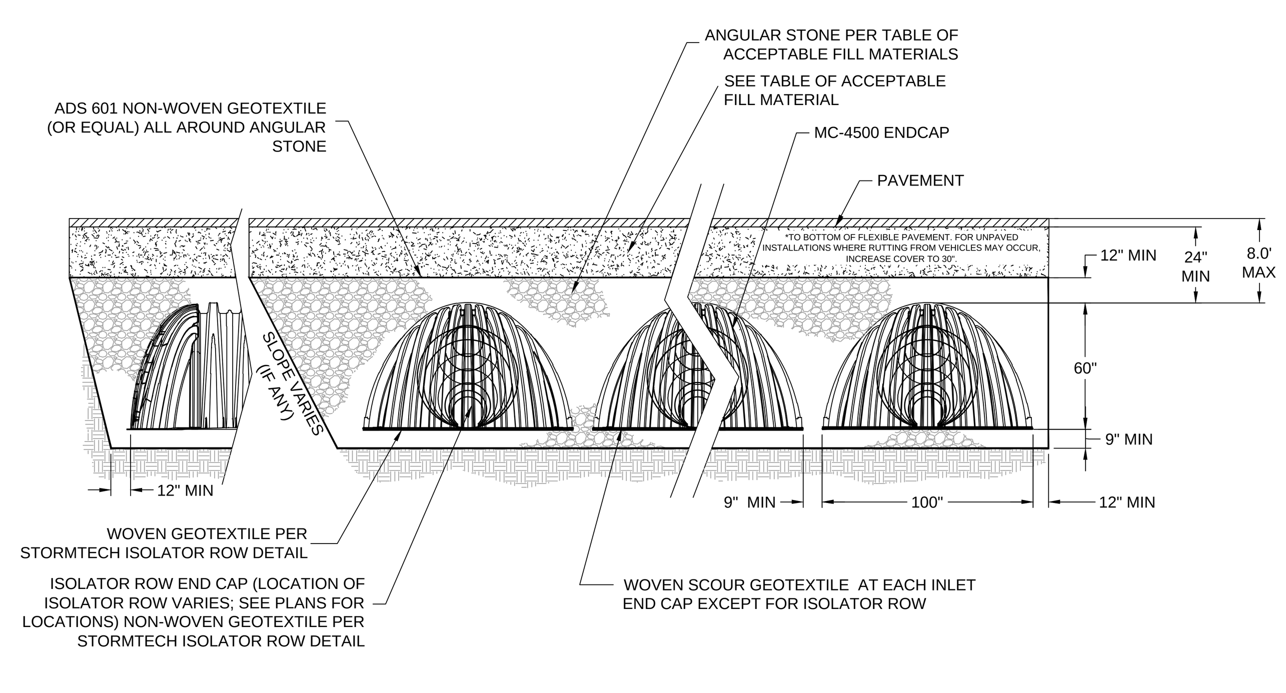

BMP COORDINATES

BMP	LATITUDE	LONGITUDE
STC#1	34.093541	–117.617728
STC#2	34.092870	–117.616435
STC#3	34.095130	–117.613210
STC#4	34.092918	–117.612951
CB#1	34.093193	–117.617439
CB#2	34.092777	–117.617608
CB#3	34.093151	–117.617231
CB#4	34.093136	–117.615356
CB#5	34.092762	–117.615063
CB#6	34.092749	–117.612215
CB#7	34.093032	–117.611683
CB#8	34.094142	–117.611529
CB#9	34.095089	–117.612617
CB#10	34.092720	–117.611515

NOTE: THE SITE AND DRAINAGE MAP CONTENTS ARE CONTAINED ON SHEETS 15 & 16.

PROJECT AREA:	47.056 AC (GROSS)	46.935 AC (NET)
	2,081,297 SF (DISTURBED AREA)	286,823 SF (EXISTING IMPERVIOUS)
	229,283 SF (PROPOSED LANDSCAPE)	1,815,859 SF (PROPOSED IMPERVIOUS)

1. **WQMP BMP As-Built Certificate**

I hereby certify that the necessary water quality management plan best management practice devices have been constructed under my supervision and are functional to the best of my knowledge as of the date below.

____________________ __________
Signature Date

Wet Seal

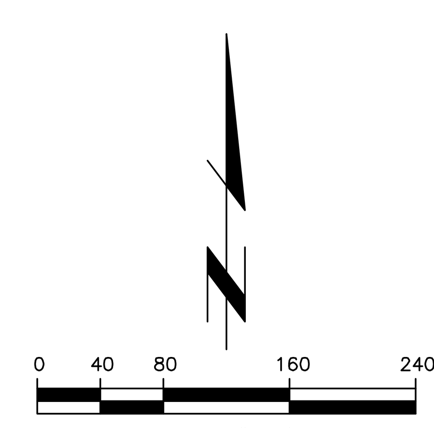

Last Update: 10/28/19
O:\3700–3799\3744\3744CGP15–PRELIMINARY SITE AND DRAINAGE MAP.dwg

PREPARED FOR:

CP LOGISTICS VINEYARD, LLC
2442 DUPONT DRIVE
IRVINE, CA 92612
PHONE: (949) 296–2989

PREPARED BY:

Thienes Engineering, Inc.
CIVIL ENGINEERING • LAND SURVEYING
14349 FIRESTONE BOULEVARD
LA MIRADA, CALIFORNIA 90638
PH.(714)521–4811 FAX(714)521–4173

CITY OF RANCHO CUCAMONGA
PUBLIC WORKS DEPARTMENT

WQMP SITE MAP

9TH & VINEYARD

Designed by	Approved by	Date
Date		
Checked by		
Date		
Designed by	Public Works Director	R.C.E. XXXXX
Date		
Checked by		
Date	Sheet 15 of 16 Sheets	

3744/15 OF 16 SHEET

BIO CLEAN SCREENING FILTER

FOR USE IN GRATE INLETS

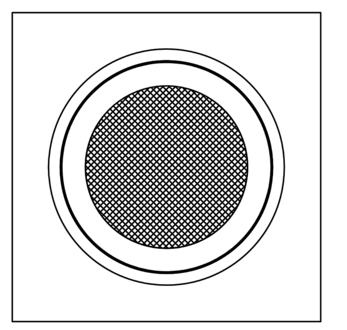

TOP VIEW

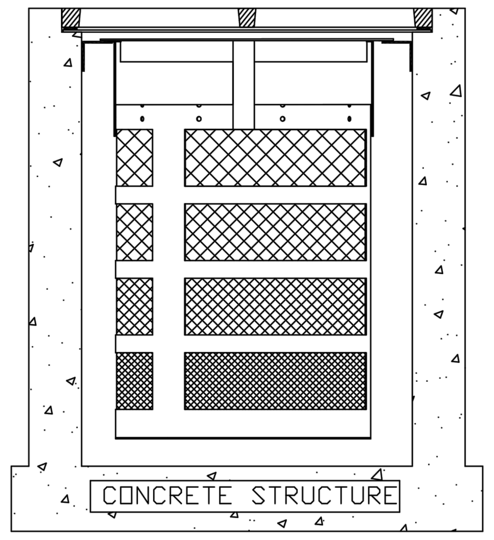

NOTES:

1. ALL HARDWARE, FLANGE, FRAME, SCREENS SHALL BE STAINLESS STEEL
2. HYDROCARBON BOOM SHALL BE 2" DIAMETER AND CONNECTED, MECHANICALLY TO THE FILTER FRAME WITH RAILS ALLOWING IT TO FLOAT ON THE WATER SURFACE REGARDLESS OF HEIGHT
3. SEE PERFORMANCE REPORTS IN MANUFACTURES SPECIFICATIONS
4. OTHER STANDARD AND CUSTOM MODEL SIZES AVAILABLE – CONTACT BIO CLEAN FOR MORE INFORMATION.
5. BASED ON 37% OPEN AREA.
6. CONSIDERS A SAFETY FACTOR OF 2.0.
7. CONSIDERS A LOCAL DEPRESSION PONDIING DEPTH OF 6 INCHES.
8. STORAGE CAPACITY BASED ON THE BASKET HALF FULL.

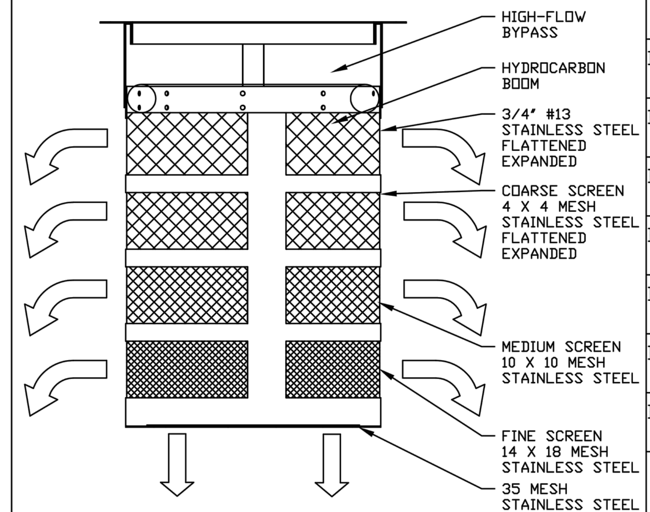

FLOW SCHEMATIC

MODEL #	TREATMENT FLOW (CFS)	BYPASS FLOW (CFS)	SOLIDS STORAGE CAPACITY (CF)
BC-GRATE-MLS 12-12-12	1.19	1.55	0.27
BC-GRATE-MLS 18-18-18	4.32	3.68	1.05
BC-GRATE-MLS 24-24-24	7.67	4.83	2.41
BC-GRATE-MLS 30-30-24	12.97	6.21	3.98
BC-GRATE-MLS 25-38-24	13.53	6.59	4.16
BC-GRATE-MLS 36-36-24	19.64	7.60	5.94
BC-GRATE-MLS 48-48-18	24.84	10.13	7.92

**FLOW RATES CALCULATED USING THE FOLLOWING EQUATION

$Q=SO*c_d*A\sqrt{2*g*h}$ c_d = COEFFICIENT of DISCHARGE = .62

DRAWING: BIO CLEAN GRATE INLET FILTER DETAILS		MULTI-LEVEL SCREENING	
TYPICAL MODEL DETAIL			
WARRANTY: 8 YEAR MANUFACTURERS		PROJECT:	
BIO CLEAN ENVIRONMENTAL SERVICES, INC. 398 VIA EL CENTRO, OCEANSIDE CA 92058 PHONE: 760-433-7640 FAX: 760-433-3176		REVISIONS:	DATE:
		REVISIONS:	DATE:
DATE: 10/12/17	SCALE: SF = 15	REVISIONS:	DATE:
DRAFTER: M.C.P.	UNITS = INCHES	REVISIONS:	DATE:

Bio Clean
A Forterra Company

PAGE 1

BIO CLEAN SCREENING FILTER WITH TROUGH SYSTEM

FOR USE IN CURB INLETS

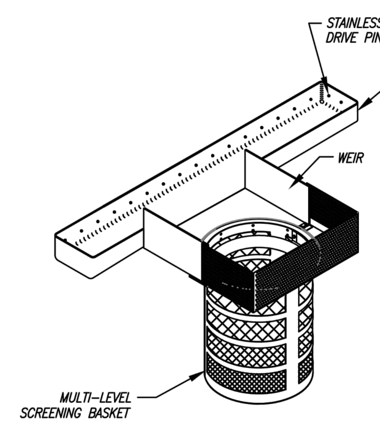

FIGURE 1:
DETAIL OF PARTS

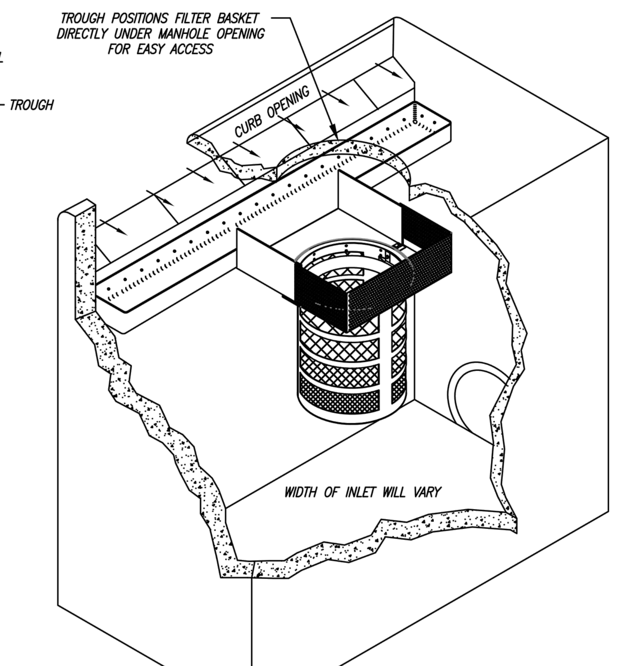

FIGURE 2:
DETAIL OF CONFIGURATION

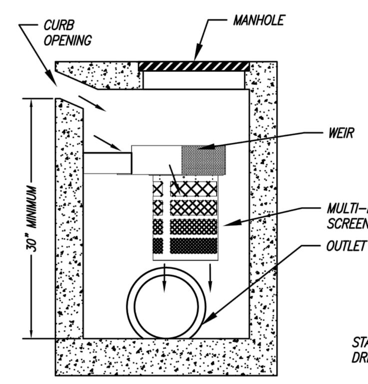

FIGURE 4:
DETAIL OF PROFILE

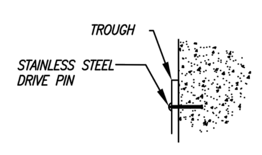

FIGURE 3:
DETAIL OF MOUNTING

NOTES:

1. TROUGH SYSTEM PROVIDES FOR ENTIRE COVERAGE OF INLET OPENING SO TO DIVERT ALL FLOW TO FILTER.
2. TROUGH SYSTEM MANUFACTURED FROM MARINE GRADE FIBERGLASS, GEL COATED FOR UV PROTECTION.
3. SYSTEM ATTACHED TO THE CATCH BASIN WITH NON-CORROSIVE HARDWARE.
4. FILTER MANUFACTURED OF 100% STAINLESS STEEL.
5. FILTER MADE OF NON-CLOGGIN SCREEN WITH 4.7 MM OPENINGS AND MEETS FULL CAPTURE REQUIREMENTS.
6. FILTER CAN BE FITTED WITH HYDROCARBON ABSORBENT BOOM
7. FILTER IS LOCATED DIRECTLY UNDER THE MANHOLE FOR EASY REMOVAL AND MAINTENANCE.
8. LENGTH OF TROUGH CAN VARY FROM 2' TO 30'
9. OTHER STANDARD AND CUSTOM MODEL SIZES AVAILABLE – CONTACT BIO CLEAN FOR MORE INFORMATION.
10. CONSIDERS A SAFETY FACTOR OF 2.0
11. BYPASS IS FACILITATED VIA OVERFLOW OF THE TROUGH SYSTEM AND IS EQUAL TO THE CAPACITY OF THE CURB OPENING
12. STORAGE CAPACITY BASED ON THE BASKET HALF FULL.
13. ADDITIONAL TREATMENT AND STORAGE CAPACITY CAN BE ACHIEVED BY UTILIZING MULTIPLE FILTER BASKETS.

MODEL NUMBER	TREATMENT FLOW (cfs)*	SOLIDS STORAGE CAPACITY (cu ft)
BC-CURB-30	2.85	2.21
BC-CURB-24	2.85	1.77
BC-CURB-18	2.85	1.33
BC-CURB-12	2.81	0.88

*SEE PAGE 2 FOR EXPLANATION OF FLOW RATES

DRAWING: BIO CLEAN CURB INLET FILTER DETAILS		MULTI-LEVEL SCREENING	
TREATMENT FLOW RATE: 2.85 cfs		MODEL #: BC-CURB-MLS	
WARRANTY: 8 YEAR MANUFACTURERS		PROJECT:	
BIO CLEAN ENVIRONMENTAL SERVICES, INC. 398 VIA EL CENTRO, OCEANSIDE CA 92058 PHONE: 760-433-7640 FAX: 760-433-3176		REVISIONS:	DATE:
		REVISIONS:	DATE:
DATE: 10/12/2017	SCALE: NTS	REVISIONS:	DATE:
DRAFTER: M.C.P.	UNITS = INCHES	REVISIONS:	DATE:

Bio Clean
A Forterra Company

PAGE 1

DRAIN INSERTS

From: kerpel.judith@epa.gov
Sent: Tuesday, October 1, 2019 3:13 PM
To: Luis Prado
Subject: USEPA Region 9 iWells notification regarding: Panattoni 9th Street and Vineyard, Rancho Cucamonga, CA, 91730

Thank you for using the online injection well registration form. Below is a copy of data received. Please reply if the data was received or transcribed in error.
This notice authorizes only the planned discharges listed. Please update this registration when these wells are active to receive our authorization to inject uncontaminated water only.
Any change of use or ownership of the wells, or any new injection, requires notification to EPA. For more information, please see also the regulations beginning at 40 CFR 144.

-Facility
Panattoni 9th Street and Vineyard
9th Street and Vineyard Avenue
Rancho Cucamonga, CA 91730

GIS: 34.093639, -117.615184
Local Identifier: 0207-271-25, -27, -39, -40, -47, -48, -89, -93, -94, -96, and -97 UIC File ID: CA-20191001-JK-1956 Tribal Land: No
Ownership: Private - Business or other for-profits

-Contacts
---Contact Type: PRIMARY OWNER
Michael Sizemore
Panattoni Development Company, Inc.
20411 SW Birch Street, Suite 200
NEWPORT BEACH, CA 92660
MSizemore@panattoni.com
---Contact Type: Consultant
Luis Prado
Thienes Engineering, Inc.
luisp@thieneseng.com

-Comments
Stormwater infiltration galleries are authorized by rule 40 CFR 144. Infiltration galleries are considered Class V wells and pose a low threat to underground sources of drinking waters (USDWs).

-Well Summary
4 - Under Construction - 5D2 Stormwater Drainage - as of 10/01/2019

INJECTION WELL EPA REGISTRATION CONFIRMATION

Form 5-1 BMP Inspection and Maintenance

BMP	Responsible Party(ies)	Inspection/Maintenance Activities Required	Minimum Frequency of Activities
Underground Infiltration Chambers	Owner	The isolator rows shall be inspected for debris and sediment accumulations and maintained by a qualified technician and he/she will properly dispose of all wastes and inspect for standing water. A manhole is installed in order to inspect and maintain the inlet row. All entry into the chamber system must be done per OSHA codes to ensure operator and inspector safety.	The isolator rows shall be inspected semi-annually (by October 1st and February 1st) and cleaned by water-flush and vacuum when solids accumulate to 3" depth. Maintenance to be conducted through service contract with the vendor or equally qualified contractor.
Drain Inserts	Owner	Visually inspect for defects and illegal dumping. Notify proper authorities if illegal dumping has occurred. Using an industrial vacuum, the collected materials shall be removed from the filter basket and disposed of properly. Inspect biosorb hydrocarbon boom and replace as necessary.	Four times per year or following any rain event that would potentially accumulate a large amount of debris in the system. Replace boom twice per year, at a minimum.
Storm Drain Stenciled Message	Owner	Visually inspect for legibility and replace or repaint as necessary.	Annually
N1: Education of Property Owners, Tenants and Occupants on Stormwater BMPs	Owner	Property owner will familiarize him/herself with the educational materials in Attachment "E" and the contents of the WQMP.	Annually (January) for all employees and within 2 months for new hires.
N2: Activity Restrictions	Owner	Activities are restricted to only those for which a BMP has been implemented. The owner shall develop ongoing activity restrictions that include those that have the potential to create adverse impacts on water quality. Activities include, but are not limited to: handling and disposal of contaminants, fertilizer and pesticide application restrictions, litter control and pick-up, and vehicle or equipment repair as well as any other activities that may potentially contribute to water pollution.	Ongoing
N3: Landscape Management BMPs	Owner	Irrigation must be consistent with City's Water Conservation Ordinance. Fertilizer and pesticide usage will be consistent with County Management Guidelines for Use of Fertilizers and Pesticides.	Ongoing
N4: BMP Maintenance	Owner	BMP maintenance, implementation schedules, and responsible parties are included with each specific BMP narrative.	As described in each BMP listed within this form.
N7: Spill Contingency Plan	Owner	Owner/tenant will have a spill contingency plan, a separate document, based on specific site needs.	Ongoing

Form 5-1 BMP Inspection and Maintenance

BMP	Responsible Party(ies)	Inspection/Maintenance Activities Required	Minimum Frequency of Activities
N10: Uniform Fire Code Implementation	Owner	If applicable, owner will comply with Article 80 of the Uniform Fire Code enforced by the fire protection agency. The facility operators will be educated annually regarding requirements for handling, storage and proper disposal of hazardous substances.	Ongoing
N11: Litter/Debris Control Program	Owner	Contract with their landscape maintenance firm to provide this service during regularly schedule maintenance. They are required to implement trash management and litter control procedures in the common areas aimed at reducing pollution of drainage water.	Weekly
N12: Employee Training	Owner	The owner will ensure that tenants are also familiar with onsite BMPs and necessary maintenance required of the tenants. Owner will check with City and County at least once a year to obtain new or updated educational materials and provide these materials to tenants. Employees shall be trained to clean up spills and participate in ongoing maintenance. The WQMP requires annual employee training and new hires within 2 months.	Annually (January) for all employees and within 2 months for new hires.
N13: Housekeeping of Loading Docks	Owner	Keep all fluids indoors. Clean up spills immediately and keep spills from entering storm drain system. No direct discharges into the storm drain system. Area shall be inspected weekly for proper containment and practices with spills cleaned up immediately and disposed of properly.	Ongoing
N14: Catch Basin Inspection Program	Owner	Monthly inspection by property owner's designee. Inspection consists of immediate repair of any deterioration of the structures and maintenance of drain inserts before and after major rain events. Drain insert maintenance shall be per manufacturer's guidelines.	Monthly inspection and maintain as necessary.

Form 5-1 BMP Inspection and Maintenance

BMP	Responsible Party(ies)	Inspection/Maintenance Activities Required	Minimum Frequency of Activities
N15: Vacuum Sweeping of Private Streets and Parking Lots	Owner	All landscape maintenance contractors will be required to sweep up all landscape cuttings, mowings and fertilizer materials off paved areas weekly and dispose of properly. Parking areas and drive ways will be swept monthly by sweeping contractor.	Monthly
N17: Comply with all other applicable NPDES permits	Owner	Will comply with Construction General Permit and Industrial General Permit (may apply for No Exposure Certification/NEC).	Ongoing
S1: Provide storm drain system stenciling and signage (CASQA New Development BMP Handbook SD-13)	Owner	"No Dumping – Drains to River" stencils will be applied. Legibility of stencil will be maintained on a yearly basis.	Annually (January)
S3: Design and construct trash and waste storage areas to reduce pollution introduction (CASQA New Development BMP Handbook SD-32)	Owner	Paved with an impervious surface, designed not to allow run-on from adjoining areas, designed to divert drainage from adjoining roofs and pavements diverted around the area, screened or walled to prevent off-site transport of trash. Detail to be provided once available.	Ongoing
S4: Use efficient irrigation systems & landscape design, water conservation, smart controllers, and source control (Statewide Model Landscape Ordinance; CASQA New Development BMP Handbook SD-12)	Owner	Irrigation systems shall include reducers or shutoff valves triggered by a pressure drop to control water loss in the event of broken sprinkler heads or lines. Timers will be used to avoid over watering and watering cycles and duration shall be adjusted seasonally by the landscape maintenance contractor. The landscaping areas will be grouped with plants that have similar water requirements. Native or drought tolerant species shall also be used where appropriate to reduce excess irrigation runoff and promote surface filtration.	Adjust watering cycles and duration seasonally / quarterly (Oct, Jan, Apr, and Jul).

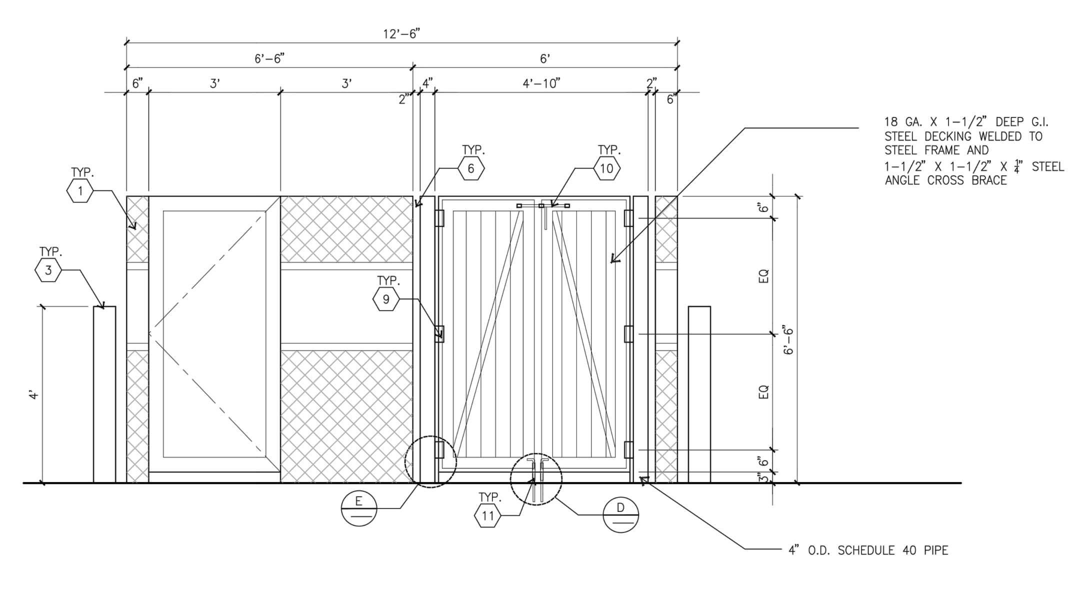

TRASH ENCLOSURE ELEVATION B
scale: 1/2" = 1'-0"

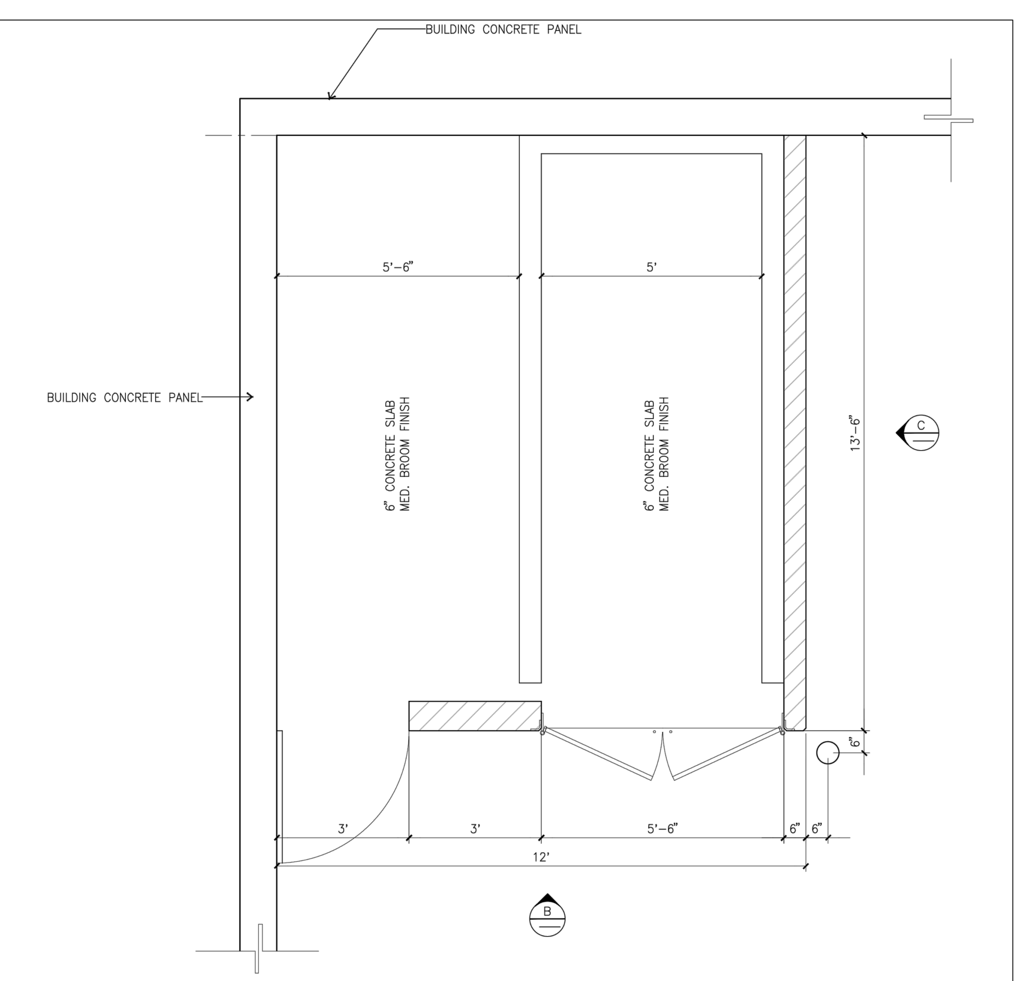

TRASH ENCLOSURE PLAN A
scale: 1/2" = 1'-0"

TRASH ENCLOSURE DETAIL

Last Update: 10/25/19
O:\3700-3799\3744\3744CGP16-PRELIMINARY SITE AND DRAINAGE MAP.dwg

PREPARED FOR:

CP LOGISTICS VINEYARD, LLC
2442 DUPONT DRIVE
IRVINE, CA 92612
PHONE: (949) 296-2989

PREPARED BY:

Thienes Engineering, Inc.
CIVIL ENGINEERING • LAND SURVEYING
14349 FIRESTONE BOULEVARD
LA MIRADA, CALIFORNIA 90638
PH.(714)521-4811 FAX(714)521-4173

CITY OF RANCHO CUCAMONGA
PUBLIC WORKS DEPARTMENT

WQMP SITE MAP

9TH & VINEYARD

Designed by ______	Approved by	Date ______
Date ______		
Checked by ______		
Date ______		
Designed by ______	Public Works Director	R.C.E. XXXXX
Date ______		
Checked by ______	Sheet 16 of 16 Sheets	
Date ______		

3744/16 OF 16 SHEET

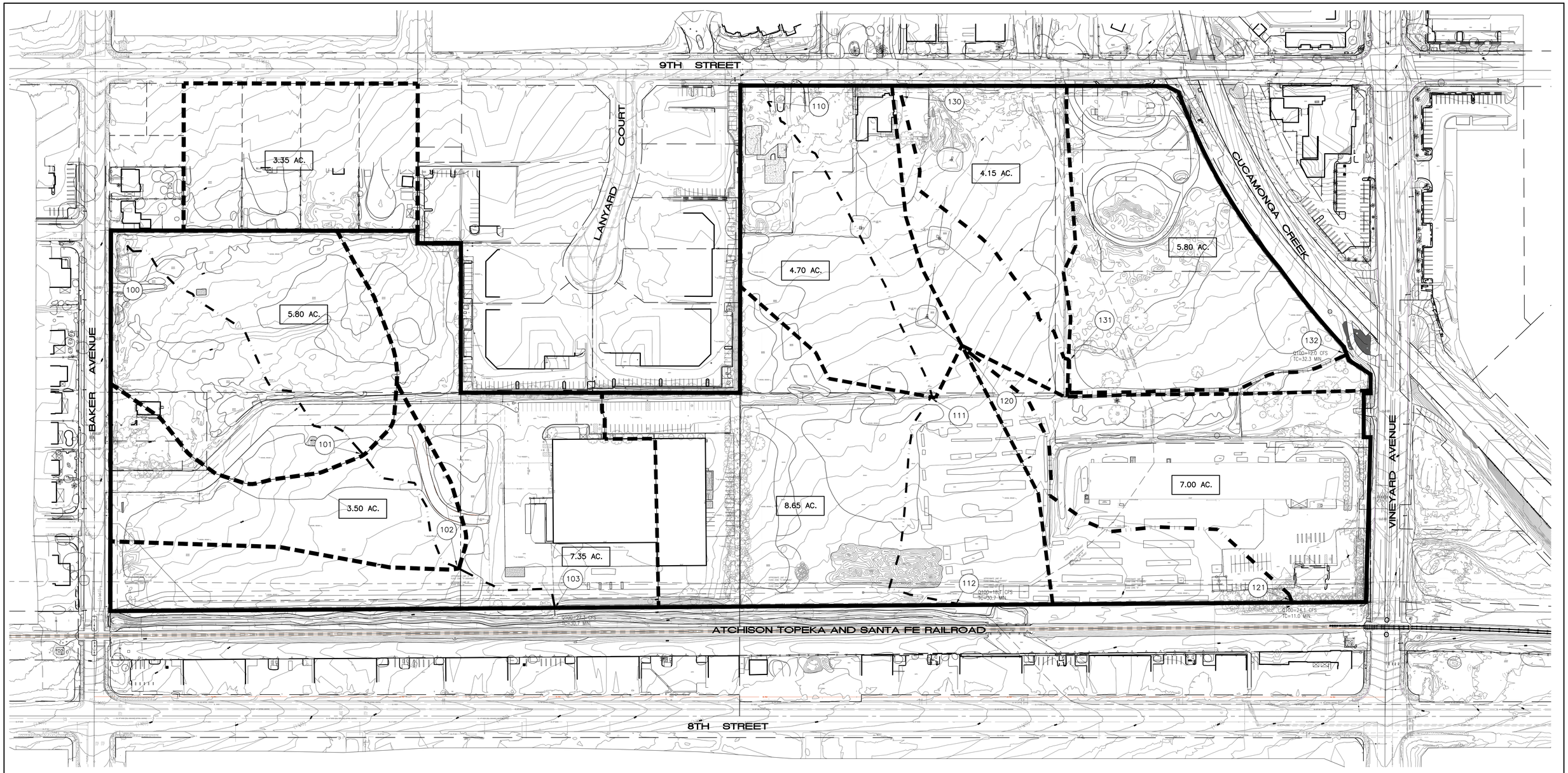

LEGEND

- PROJECT BOUNDARY
- SUBAREA BOUNDARY
- FLOW PATH
- 1.00 AC. — SUBAREA AREA
- (100) — NODE NUMBER

0 40 80 160 240

SCALE:1"=80'

Last Update: 10/2/19
O:\3700-3799\3744\3744hyd-EX.dwg

PREPARED FOR:

CP LOGISTICS VINEYARD, LLC
2442 DUPONT DRIVE
IRVINE, CA 92612
PHONE: (949) 296-2989

PREPARED BY:

Thienes Engineering, Inc.
CIVIL ENGINEERING • LAND SURVEYING
14349 FIRESTONE BOULEVARD
LA MIRADA, CALIFORNIA 90638
PH.(714)521-4811 FAX(714)521-4173

CITY OF RANCHO CUCAMONGA
PUBLIC WORKS DEPARTMENT

EXISTING CONDITION HYDROLOGY MAP

9TH & VINEYARD

Designed by ____ Date ____	Approved by ____ Date ____
Checked by ____ Date ____	
Designed by ____ Date ____	Public Works Director ____ R.C.E. XXXXX
Checked by ____ Date ____	Sheet 1 of 16 Sheets

3744/ 1 OF 16 SHEET

Attachment D
Memorandum of Agreement of Storm Water Quality Management Plan

RECORDING REQUESTED BY
City of Rancho Cucamonga
AND WHEN RECORDED MAIL DOCUMENT TO:

NAME City of Rancho Cucamonga
Engineering Services Dept.
STREET ADDRESS 10500 Civic Center Drive
CITY, STATE & ZIP CODE Rancho Cucamonga, CA 91730

SPACE ABOVE FOR RECORDER'S USE ONLY

MEMORANDUM OF AGREEMENT OF STORM WATER QUALITY MANAGEMENT PLAN

THIS COVER SHEET ADDED TO PROVIDE ADEQUATE SPACE FOR RECORDING INFORMATION

File: TEI 3744

Prepared by: Thienes Engineering, Inc.

Checked by: RS/LP/VL

Assessor's Parcel Number: 0207-271-25, -27, -39, -40, -89, -93, -94, -96 and -97

MEMORANDUM OF AGREEMENT OF STORM WATER QUALITY MANAGEMENT PLAN

The undersigned hereby enters into this Memorandum of Storm Water Quality Management Plan (the "Memorandum") on this _____ day of MONTH, 2019 with reference to the following:

A. The undersigned is the owner of certain real property located in the City of Rancho Cucamonga, County of San Bernardino, State of California legally described below and hereto referred to as "Exhibit A" (the "Real Property") and "Exhibit B" (Vicinity Map). Each exhibit is attached hereto and incorporated herein by this reference and also in the Water Quality Management Plan document, on file with the owner or its successors or assigns, and the City and hereinafter is referred to as "WQMP".

B. The undersigned is seeking certain permits and approvals from the City of Rancho Cucamonga ("City") for the development of the Real Property as follows: Precise Grading and Building Permit (the "Approvals").

C. In consideration of the City granting the Approvals, I the undersigned, agree to and accept the terms and conditions of the Storm Water Quality Management Plan (the "Plan") approved by the City's Engineering Services Department on MM/DD/2019, and bind the Real Property with the provisions of the Plan, which is on file with the City of Rancho Cucamonga's Engineering Services Department, File No. DRCXXXX-XXXXX, PGRXXXX-XXXXX, WQMPXXXX-XXXXX.

D. In consideration of the City granting the Approvals, the undersigned has agreed to and accepts the terms and conditions of the Plan as it relates to the Real Property and agrees that the Real Property shall be bound by and subject to the Plan.

E. The owner has chosen to install structures as required by Best Management Practices (BMPs) and to implement non-structural BMPs as described in Exhibit "C" (List of BMP Maintenance Items) and depicted in Exhibit "D" (BMP Site Map). The purpose of the WQMP is to minimize pollutants in urban runoff and to minimize other adverse impacts of urban runoff;

F. Said WQMP has been certified by the Owner and reviewed and approved by the City;

G. Said BMPs, with installation and/or implementation on private property and draining only private property, are part of a private facility with all implementation, maintenance or replacement, therefore, the sole responsibility of the Owner in accordance with the terms of this Agreement;

NOW, THEREFORE, it is hereby agreed by the undersigned as follows:

1. Owner hereby provides the City of Rancho Cucamonga's designee complete inspection access, of any duration, to the areas in which BMPs are applied and their immediate vicinity at any time, upon reasonable notice, or in the event of emergency, as determined by the City's Engineer, no advance notice, for the purpose of inspection, sampling, testing of device(s), and in case of emergency, to undertake all necessary repairs or other preventative measures at owner's expense as provided in paragraph 3 below. City shall make every effort at all times to minimize or avoid interference with Owner's use of the property.

2. The undersigned hereby agrees to the terms and conditions of the Plan, the provisions of which are incorporated by reference as though set out herein in full, and agrees that the Real Property shall be bound by and subject to the terms and conditions of the Plan, subject to minor modifications incorporated during construction, as approved by the City of Rancho Cucamonga Engineering Services Director.

3. The undersigned agrees to conduct the necessary routine maintenance of any structural devices designed into or installed as part of the storm water drainage system on the Real Property to reduce

pollutants in storm water runoff to the maximum extent practicable or to reestablish infiltration through the lifetime of the development which is the subject of Approvals.

4. The undersigned agrees to hold the City, its officials, officers, employees, volunteers, and agents free and harmless from any and all claims, demands, causes of action, costs, expenses, liability, loss, damage, or injury, in law or equity, to property or persons, arising from the imposition of the Plan by the City.

5. The agreements contained herein and the terms and conditions of the Plan are covenants intended to run with the land and shall burden the Real Property and shall be binding upon future owners of all or any portion of the Real Property. Upon a transfer of the Real Property, the transferor (including the undersigned) shall be relieved of any obligations under this Memorandum or the Plan arising from and after the effective date of the transfer.

6. The provisions of this Memorandum are intended to constitute equitable servitudes which shall encumber the Real Property and be binding upon future owners of the Real Property or any portion thereof.

7. The provisions of the Memorandum may be enforced by the City, which, among other remedies, shall have the remedy of injunctive relief and other equitable remedies.

8. This Memorandum shall not be amended, modified or terminated without the prior written consent of the City, which consent to be effective shall be contained in a document executed by the City and recorded against the Real Property.

Owner Name: CP Logistics Vineyard LLC

Authorized Signature _____

Print Name: William Bullen

Title: Vice President

Date: _____

Project Description: Construction of an industrial development consisting of three (3) industrial logistics buildings at the intersection of 9th Street and Vineyard Avenue on approximately 46.95 acres of land.

ALL CAPACITY ACKNOWLEDGMENT

A notary public or other officer completing this certificate verifies only the identity of the individual who signed the document to which this certificate is attached, and not the truthfulness, accuracy, or validity of that document.

STATE OF _____

COUNTY OF _____

On _____ (Date) before me, _____ (Name and title of the officer) ,

personally appeared _____ (Name of person signing)

who proved to me on the basis of satisfactory evidence to be the person(s) whose name(s) is/are subscribed to the within instrument and acknowledged to me that he/she/they executed the same in his/her/their authorized capacity(ies), and that by his/her/their signature(s) on the instrument the person(s), or the entity upon behalf of which the person(s) acted, executed the instrument.

I certify under PENALTY OF PERJURY under the laws of the State of California that the foregoing paragraph is true and correct.

WITNESS my hand and official seal.

_____
Signature of officer

(Seal)

Attachment E
Educational Materials

Non-Stormwater Discharges SC-10

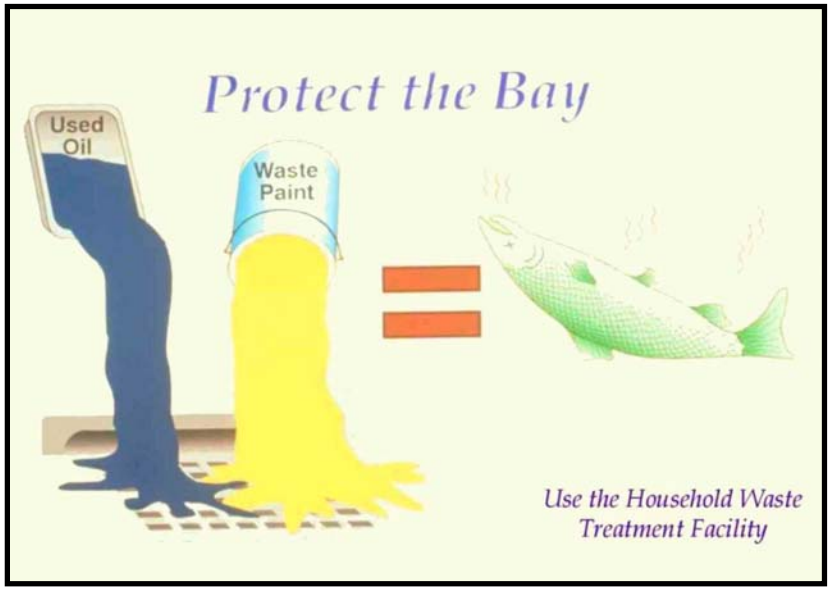

Art Credit: Margie Winter

Objectives

- Cover
- Contain
- Educate
- Reduce/Minimize
- Product Substitution

Targeted Constituents

Sediment	
Nutrients	✓
Trash	
Metals	✓
Bacteria	✓
Oil and Grease	✓
Organics	✓

Description

Non-stormwater discharges are those flows that do not consist entirely of stormwater. Some non-stormwater discharges do not include pollutants and may be discharged to the storm drain. These include uncontaminated groundwater and natural springs. There are also some non-stormwater discharges that typically do not contain pollutants and may be discharged to the storm drain with conditions. These include car washing, air conditioner condensate, etc. However there are certain non-stormwater discharges that pose environmental concern. These discharges may originate from illegal dumping or from internal floor drains, appliances, industrial processes, sinks, and toilets that are connected to the nearby storm drainage system. These discharges (which may include: process waste waters, cooling waters, wash waters, and sanitary wastewater) can carry substances such as paint, oil, fuel and other automotive fluids, chemicals and other pollutants into storm drains. They can generally be detected through a combination of detection and elimination. The ultimate goal is to effectively eliminate non-stormwater discharges to the stormwater drainage system through implementation of measures to detect, correct, and enforce against illicit connections and illegal discharges of pollutants on streets and into the storm drain system and creeks.

Approach

Initially the industry must make an assessment of non-stormwater discharges to determine which types must be eliminated or addressed through BMPs. The focus of the following approach is in the elimination of non-stormwater discharges.

CASQA California Stormwater Quality Association

Pollution Prevention

- Ensure that used oil, used antifreeze, and hazardous chemical recycling programs are being implemented. Encourage litter control.

Suggested Protocols

Recommended Complaint Investigation Equipment

- Field Screening Analysis
  - pH paper or meter
  - Commercial stormwater pollutant screening kit that can detect for reactive phosphorus, nitrate nitrogen, ammonium nitrogen, specific conductance, and turbidity
  - Sample jars
  - Sample collection pole
  - A tool to remove access hole covers
- Laboratory Analysis
  - Sample cooler
  - Ice
  - Sample jars and labels
  - Chain of custody forms
- Documentation
  - Camera
  - Notebook
  - Pens
  - Notice of Violation forms
  - Educational materials

General

- Develop clear protocols and lines of communication for effectively prohibiting non-stormwater discharges, especially those that are not classified as hazardous. These are often not responded to as effectively as they need to be.
- Stencil or demarcate storm drains, where applicable, to prevent illegal disposal of pollutants. Storm drain inlets should have messages such as “Dump No Waste Drains to Stream” stenciled or demarcated next to them to warn against ignorant or intentional dumping of pollutants into the storm drainage system.

- See SC44 Stormwater Drainage System Maintenance for additional information.

Illicit Connections

- Locate discharges from the industrial storm drainage system to the municipal storm drain system through review of "as-built" piping schematics.
- Isolate problem areas and plug illicit discharge points.
- Locate and evaluate all discharges to the industrial storm drain system.

Visual Inspection and Inventory

- Inventory and inspect each discharge point during dry weather.
- Keep in mind that drainage from a storm event can continue for a day or two following the end of a storm and groundwater may infiltrate the underground stormwater collection system. Also, non-stormwater discharges are often intermittent and may require periodic inspections.

Review Infield Piping

- A review of the "as-built" piping schematic is a way to determine if there are any connections to the stormwater collection system.
- Inspect the path of floor drains in older buildings.

Smoke Testing

- Smoke testing of wastewater and stormwater collection systems is used to detect connections between the two systems.
- During dry weather the stormwater collection system is filled with smoke and then traced to sources. The appearance of smoke at the base of a toilet indicates that there may be a connection between the sanitary and the stormwater system.

Dye Testing

- A dye test can be performed by simply releasing a dye into either your sanitary or process wastewater system and examining the discharge points from the stormwater collection system for discoloration.

TV Inspection of Drainage System

- TV Cameras can be employed to visually identify illicit connections to the industrial storm drainage system.

Illegal Dumping

- Regularly inspect and clean up hot spots and other storm drainage areas where illegal dumping and disposal occurs.
- On paved surfaces, clean up spills with as little water as possible. Use a rag for small spills, a damp mop for general cleanup, and absorbent material for larger spills. If the spilled material is hazardous, then the used cleanup materials are also hazardous and must be sent to a certified laundry (rags) or disposed of as hazardous waste.

- Never hose down or bury dry material spills. Sweep up the material and dispose of properly.
- Use adsorbent materials on small spills rather than hosing down the spill. Remove the adsorbent materials promptly and dispose of properly.
- For larger spills, a private spill cleanup company or Hazmat team may be necessary.

Once a site has been cleaned:

- Post "No Dumping" signs with a phone number for reporting dumping and disposal.
- Landscaping and beautification efforts of hot spots may also discourage future dumping, as well as provide open space and increase property values.
- Lighting or barriers may also be needed to discourage future dumping.
- See fact sheet SC11 Spill Prevention, Control, and Cleanup.

Inspection

- Regularly inspect and clean up hot spots and other storm drainage areas where illegal dumping and disposal occurs.
- Conduct field investigations of the industrial storm drain system for potential sources of non-stormwater discharges.
- Pro-actively conduct investigations of high priority areas. Based on historical data, prioritize specific geographic areas and/or incident type for pro-active investigations.

Reporting

- A database is useful for defining and tracking the magnitude and location of the problem.
- Report prohibited non-stormwater discharges observed during the course of normal daily activities so they can be investigated, contained, and cleaned up or eliminated.
- Document that non-stormwater discharges have been eliminated by recording tests performed, methods used, dates of testing, and any on-site drainage points observed.
- Document and report annually the results of the program.
- Maintain documentation of illicit connection and illegal dumping incidents, including significant conditionally exempt discharges that are not properly managed.

Training

- Training of technical staff in identifying and documenting illegal dumping incidents is required.
- Consider posting the quick reference table near storm drains to reinforce training.
- Train employees to identify non-stormwater discharges and report discharges to the appropriate departments.

- Educate employees about spill prevention and cleanup.
- Well-trained employees can reduce human errors that lead to accidental releases or spills. The employee should have the tools and knowledge to immediately begin cleaning up a spill should one occur. Employees should be familiar with the Spill Prevention Control and Countermeasure Plan.
- Determine and implement appropriate outreach efforts to reduce non-permissible non-stormwater discharges.
- Conduct spill response drills annually (if no events occurred to evaluate your plan) in cooperation with other industries.
- When a responsible party is identified, educate the party on the impacts of his or her actions.

Spill Response and Prevention

- See SC11 Spill Prevention Control and Cleanup.

Other Considerations

- Many facilities do not have accurate, up-to-date schematic drawings.

Requirements

Costs (including capital and operation & maintenance)

- The primary cost is for staff time and depends on how aggressively a program is implemented.
- Cost for containment and disposal is borne by the discharger.
- Illicit connections can be difficult to locate especially if there is groundwater infiltration.
- Indoor floor drains may require re-plumbing if cross-connections to storm drains are detected.

Maintenance (including administrative and staffing)

- Illegal dumping and illicit connection violations requires technical staff to detect and investigate them.

Supplemental Information

Further Detail of the BMP

Illegal Dumping

- Substances illegally dumped on streets and into the storm drain systems and creeks include paints, used oil and other automotive fluids, construction debris, chemicals, fresh concrete, leaves, grass clippings, and pet wastes. All of these wastes cause stormwater and receiving water quality problems as well as clog the storm drain system itself.
- Establish a system for tracking incidents. The system should be designed to identify the following:
  - Illegal dumping hot spots

- Types and quantities (in some cases) of wastes
- Patterns in time of occurrence (time of day/night, month, or year)
- Mode of dumping (abandoned containers, "midnight dumping" from moving vehicles, direct dumping of materials, accidents/spills)
- Responsible parties

One of the keys to success of reducing or eliminating illegal dumping is increasing the number of people at the facility who are aware of the problem and who have the tools to at least identify the incident, if not correct it. Therefore, train field staff to recognize and report the incidents.

What constitutes a "non-stormwater" discharge?

- Non-stormwater discharges to the stormwater collection system may include any water used directly in the manufacturing process (process wastewater), air conditioning condensate and coolant, non-contact cooling water, cooling equipment condensate, outdoor secondary containment water, vehicle and equipment wash water, sink and drinking fountain wastewater, sanitary wastes, or other wastewaters.

Permit Requirements

- Facilities subject to stormwater permit requirements must include a certification that the stormwater collection system has been tested or evaluated for the presence of non-stormwater discharges. The State's General Industrial Stormwater Permit requires that non-stormwater discharges be eliminated prior to implementation of the facility's SWPPP.

Performance Evaluation

- Review annually internal investigation results; assess whether goals were met and what changes or improvements are necessary.
- Obtain feedback from personnel assigned to respond to, or inspect for, illicit connections and illegal dumping incidents.

References and Resources

California's Nonpoint Source Program Plan http://www.swrcb.ca.gov/nps/index.html

Clark County Storm Water Pollution Control Manual
http://www.co.clark.wa.us/pubworks/bmpman.pdf

King County Storm Water Pollution Control Manual http://dnr.metrokc.gov/wlr/dss/spcm.htm

Santa Clara Valley Urban Runoff Pollution Prevention Program http://www.scvurppp.org

The Storm Water Managers Resource Center http://www.stormwatercenter.net/

Spill Prevention, Control & Cleanup SC-11

Photo Credit: Geoff Brosseau

Objectives

- Cover
- Contain
- Educate
- Reduce/Minimize
- Product Substitution

Description

Many activities that occur at an industrial or commercial site have the potential to cause accidental or illegal spills. Preparation for accidental or illegal spills, with proper training and reporting systems implemented, can minimize the discharge of pollutants to the environment.

Spills and leaks are one of the largest contributors of stormwater pollutants. Spill prevention and control plans are applicable to any site at which hazardous materials are stored or used. An effective plan should have spill prevention and response procedures that identify potential spill areas, specify material handling procedures, describe spill response procedures, and provide spill clean-up equipment. The plan should take steps to identify and characterize potential spills, eliminate and reduce spill potential, respond to spills when they occur in an effort to prevent pollutants from entering the stormwater drainage system, and train personnel to prevent and control future spills.

Targeted Constituents

Sediment	
Nutrients	
Trash	
Metals	✓
Bacteria	
Oil and Grease	✓
Organics	✓

Approach

Pollution Prevention

- Develop procedures to prevent/mitigate spills to storm drain systems. Develop and standardize reporting procedures, containment, storage, and disposal activities, documentation, and follow-up procedures.

- Develop a Spill Prevention Control and Countermeasure (SPCC) Plan. The plan should include:

- Description of the facility, owner and address, activities and chemicals present
- Facility map
- Notification and evacuation procedures
- Cleanup instructions
- Identification of responsible departments
- Identify key spill response personnel

- Recycle, reclaim, or reuse materials whenever possible. This will reduce the amount of process materials that are brought into the facility.

Suggested Protocols (including equipment needs)

Spill Prevention

- Develop procedures to prevent/mitigate spills to storm drain systems. Develop and standardize reporting procedures, containment, storage, and disposal activities, documentation, and follow-up procedures.

- If consistent illegal dumping is observed at the facility:
  - Post "No Dumping" signs with a phone number for reporting illegal dumping and disposal. Signs should also indicate fines and penalties applicable for illegal dumping.
  - Landscaping and beautification efforts may also discourage illegal dumping.
  - Bright lighting and/or entrance barriers may also be needed to discourage illegal dumping.

- Store and contain liquid materials in such a manner that if the tank is ruptured, the contents will not discharge, flow, or be washed into the storm drainage system, surface waters, or groundwater.

- If the liquid is oil, gas, or other material that separates from and floats on water, install a spill control device (such as a tee section) in the catch basins that collects runoff from the storage tank area.

- Routine maintenance:
  - Place drip pans or absorbent materials beneath all mounted taps, and at all potential drip and spill locations during filling and unloading of tanks. Any collected liquids or soiled absorbent materials must be reused/recycled or properly disposed.
  - Store and maintain appropriate spill cleanup materials in a location known to all near the tank storage area; and ensure that employees are familiar with the site's spill control plan and/or proper spill cleanup procedures.
  - Sweep and clean the storage area monthly if it is paved, *do not hose down the area to a storm drain.*

  - Check tanks (and any containment sumps) daily for leaks and spills. Replace tanks that are leaking, corroded, or otherwise deteriorating with tanks in good condition. Collect all spilled liquids and properly dispose of them.

- Label all containers according to their contents (e.g., solvent, gasoline).
- Label hazardous substances regarding the potential hazard (corrosive, radioactive, flammable, explosive, poisonous).
- Prominently display required labels on transported hazardous and toxic materials (per US DOT regulations).
- Identify key spill response personnel.

Spill Control and Cleanup Activities

- Follow the Spill Prevention Control and Countermeasure Plan.
- Clean up leaks and spills immediately.
- Place a stockpile of spill cleanup materials where it will be readily accessible (e.g., near storage and maintenance areas).
- On paved surfaces, clean up spills with as little water as possible. Use a rag for small spills, a damp mop for general cleanup, and absorbent material for larger spills. If the spilled material is hazardous, then the used cleanup materials are also hazardous and must be sent to a certified laundry (rags) or disposed of as hazardous waste. Physical methods for the cleanup of dry chemicals include the use of brooms, shovels, sweepers, or plows.
- Never hose down or bury dry material spills. Sweep up the material and dispose of properly.
- Chemical cleanups of material can be achieved with the use of adsorbents, gels, and foams. Use adsorbent materials on small spills rather than hosing down the spill. Remove the adsorbent materials promptly and dispose of properly.
- For larger spills, a private spill cleanup company or Hazmat team may be necessary.

Reporting

- Report spills that pose an immediate threat to human health or the environment to the Regional Water Quality Control Board.
- Federal regulations require that any oil spill into a water body or onto an adjoining shoreline be reported to the National Response Center (NRC) at 800-424-8802 (24 hour).
- Report spills to local agencies, such as the fire department; they can assist in cleanup.
- Establish a system for tracking incidents. The system should be designed to identify the following:

  - Types and quantities (in some cases) of wastes

  - Patterns in time of occurrence (time of day/night, month, or year)

- Mode of dumping (abandoned containers, "midnight dumping" from moving vehicles, direct dumping of materials, accidents/spills)

- Responsible parties

Training

- Educate employees about spill prevention and cleanup.

- Well-trained employees can reduce human errors that lead to accidental releases or spills:

  - The employee should have the tools and knowledge to immediately begin cleaning up a spill should one occur.

  - Employees should be familiar with the Spill Prevention Control and Countermeasure Plan.

- Employees should be educated about aboveground storage tank requirements. Employees responsible for aboveground storage tanks and liquid transfers should be thoroughly familiar with the Spill Prevention Control and Countermeasure Plan and the plan should be readily available.

- Train employees to recognize and report illegal dumping incidents.

Other Considerations (Limitations and Regulations)

- State regulations exist for facilities with a storage capacity of 10,000 gallons or more of petroleum to prepare a Spill Prevention Control and Countermeasure (SPCC) Plan (Health & Safety Code Chapter 6.67).

- State regulations also exist for storage of hazardous materials (Health & Safety Code Chapter 6.95), including the preparation of area and business plans for emergency response to the releases or threatened releases.

- Consider requiring smaller secondary containment areas (less than 200 sq. ft.) to be connected to the sanitary sewer, prohibiting any hard connections to the storm drain.

Requirements

Costs (including capital and operation & maintenance)

- Will vary depending on the size of the facility and the necessary controls.

- Prevention of leaks and spills is inexpensive. Treatment and/or disposal of contaminated soil or water can be quite expensive.

Maintenance (including administrative and staffing)

- This BMP has no major administrative or staffing requirements. However, extra time is needed to properly handle and dispose of spills, which results in increased labor costs.

Supplemental Information

Further Detail of the BMP

Reporting

Record keeping and internal reporting represent good operating practices because they can increase the efficiency of the facility and the effectiveness of BMPs. A good record keeping system helps the facility minimize incident recurrence, correctly respond with appropriate cleanup activities, and comply with legal requirements. A record keeping and reporting system should be set up for documenting spills, leaks, and other discharges, including discharges of hazardous substances in reportable quantities. Incident records describe the quality and quantity of non-stormwater discharges to the storm sewer. These records should contain the following information:

- Date and time of the incident
- Weather conditions
- Duration of the spill/leak/discharge
- Cause of the spill/leak/discharge
- Response procedures implemented
- Persons notified
- Environmental problems associated with the spill/leak/discharge

Separate record keeping systems should be established to document housekeeping and preventive maintenance inspections, and training activities. All housekeeping and preventive maintenance inspections should be documented. Inspection documentation should contain the following information:

- The date and time the inspection was performed
- Name of the inspector
- Items inspected
- Problems noted
- Corrective action required
- Date corrective action was taken

Other means to document and record inspection results are field notes, timed and dated photographs, videotapes, and drawings and maps.

Aboveground Tank Leak and Spill Control

Accidental releases of materials from aboveground liquid storage tanks present the potential for contaminating stormwater with many different pollutants. Materials spilled, leaked, or lost from

tanks may accumulate in soils or on impervious surfaces and be carried away by stormwater runoff.

The most common causes of unintentional releases are:

- Installation problems
- Failure of piping systems (pipes, pumps, flanges, couplings, hoses, and valves)
- External corrosion and structural failure
- Spills and overfills due to operator error
- Leaks during pumping of liquids or gases from truck or rail car to a storage tank or vice versa

Storage of reactive, ignitable, or flammable liquids should comply with the Uniform Fire Code and the National Electric Code. Practices listed below should be employed to enhance the code requirements:

- Tanks should be placed in a designated area.
- Tanks located in areas where firearms are discharged should be encapsulated in concrete or the equivalent.
- Designated areas should be impervious and paved with Portland cement concrete, free of cracks and gaps, in order to contain leaks and spills.
- Liquid materials should be stored in UL approved double walled tanks or surrounded by a curb or dike to provide the volume to contain 10 percent of the volume of all of the containers or 110 percent of the volume of the largest container, whichever is greater. The area inside the curb should slope to a drain.
- For used oil or dangerous waste, a dead-end sump should be installed in the drain.
- All other liquids should be drained to the sanitary sewer if available. The drain must have a positive control such as a lock, valve, or plug to prevent release of contaminated liquids.
- Accumulated stormwater in petroleum storage areas should be passed through an oil/water separator.

Maintenance is critical to preventing leaks and spills. Conduct routine inspections and:

- Check for external corrosion and structural failure.
- Check for spills and overfills due to operator error.
- Check for failure of piping system (pipes, pumps, flanger, coupling, hoses, and valves).
- Check for leaks or spills during pumping of liquids or gases from truck or rail car to a storage facility or vice versa.

- Visually inspect new tank or container installation for loose fittings, poor welding, and improper or poorly fitted gaskets.
- Inspect tank foundations, connections, coatings, and tank walls and piping system. Look for corrosion, leaks, cracks, scratches, and other physical damage that may weaken the tank or container system.
- Frequently relocate accumulated stormwater during the wet season.
- Periodically conduct integrity testing by a qualified professional.

Vehicle Leak and Spill Control

Major spills on roadways and other public areas are generally handled by highly trained Hazmat teams from local fire departments or environmental health departments. The measures listed below pertain to leaks and smaller spills at vehicle maintenance shops.

In addition to implementing the spill prevention, control, and clean up practices above, use the following measures related to specific activities:

Vehicle and Equipment Maintenance

- Perform all vehicle fluid removal or changing inside or under cover to prevent the run-on of stormwater and the runoff of spills.
- Regularly inspect vehicles and equipment for leaks, and repair immediately.
- Check incoming vehicles and equipment (including delivery trucks, and employee and subcontractor vehicles) for leaking oil and fluids. Do not allow leaking vehicles or equipment onsite.
- Always use secondary containment, such as a drain pan or drop cloth, to catch spills or leaks when removing or changing fluids.
- Immediately drain all fluids from wrecked vehicles.
- Store wrecked vehicles or damaged equipment under cover.
- Place drip pans or absorbent materials under heavy equipment when not in use.
- Use adsorbent materials on small spills rather than hosing down the spill.
- Remove the adsorbent materials promptly and dispose of properly.
- Promptly transfer used fluids to the proper waste or recycling drums. Don't leave full drip pans or other open containers lying around.
- Oil filters disposed of in trashcans or dumpsters can leak oil and contaminate stormwater. Place the oil filter in a funnel over a waste oil recycling drum to drain excess oil before disposal. Oil filters can also be recycled. Ask your oil supplier or recycler about recycling oil filters.

- Store cracked batteries in a non-leaking secondary container. Do this with all cracked batteries, even if you think all the acid has drained out. If you drop a battery, treat it as if it is cracked. Put it into the containment area until you are sure it is not leaking.

Vehicle and Equipment Fueling

- Design the fueling area to prevent the run-on of stormwater and the runoff of spills:
  - Cover fueling area if possible.
  - Use a perimeter drain or slope pavement inward with drainage to a sump.
  - Pave fueling area with concrete rather than asphalt.
- If dead-end sump is not used to collect spills, install an oil/water separator.
- Install vapor recovery nozzles to help control drips as well as air pollution.
- Discourage "topping-off' of fuel tanks.
- Use secondary containment when transferring fuel from the tank truck to the fuel tank.
- Use adsorbent materials on small spills and general cleaning rather than hosing down the area. Remove the adsorbent materials promptly.
- Carry out all Federal and State requirements regarding underground storage tanks, or install above ground tanks.
- Do not use mobile fueling of mobile industrial equipment around the facility; rather, transport the equipment to designated fueling areas.
- Keep your Spill Prevention Control and Countermeasure (SPCC) Plan up-to-date.
- Train employees in proper fueling and cleanup procedures.

Industrial Spill Prevention Response

For the purposes of developing a spill prevention and response program to meet the stormwater regulations, facility managers should use information provided in this fact sheet and the spill prevention/response portions of the fact sheets in this handbook, for specific activities. The program should:

- Integrate with existing emergency response/hazardous materials programs (e.g., Fire Department)
- Develop procedures to prevent/mitigate spills to storm drain systems
- Identify responsible departments
- Develop and standardize reporting procedures, containment, storage, and disposal activities, documentation, and follow-up procedures
- Address spills at municipal facilities, as well as public areas

- Provide training concerning spill prevention, response and cleanup to all appropriate personnel

References and Resources

California's Nonpoint Source Program Plan http://www.swrcb.ca.gov/nps/index.html

Clark County Storm Water Pollution Control Manual
http://www.co.clark.wa.us/pubworks/bmpman.pdf

King County Storm Water Pollution Control Manual http://dnr.metrokc.gov/wlr/dss/spcm.htm

Santa Clara Valley Urban Runoff Pollution Prevention Program http://www.scvurppp.org

The Stormwater Managers Resource Center http://www.stormwatercenter.net/

Outdoor Loading/Unloading SC-30

Photo Credit: Geoff Brosseau

Objectives

- Cover
- Contain
- Educate
- Reduce/Minimize
- Product Substitution

Description

The loading/unloading of materials usually takes place outside on docks or terminals; therefore, materials spilled, leaked, or lost during loading/unloading may collect in the soil or on other surfaces and have the potential to be carried away by stormwater runoff or when the area is cleaned. Additionally, rainfall may wash pollutants from machinery used to unload or move materials. Implementation of the following protocols will prevent or reduce the discharge of pollutants to stormwater from outdoor loading/unloading of materials.

Targeted Constituents

Sediment	✓
Nutrients	✓
Trash	
Metals	✓
Bacteria	
Oil and Grease	✓
Organics	✓

Approach

Reduce potential for pollutant discharge through source control pollution prevention and BMP implementation. Successful implementation depends on effective training of employees on applicable BMPs and general pollution prevention strategies and objectives.

Pollution Prevention

- Keep accurate maintenance logs to evaluate materials removed and improvements made.
- Park tank trucks or delivery vehicles in designated areas so that spills or leaks can be contained.
- Limit exposure of material to rainfall whenever possible.
- Prevent stormwater run-on.
- Check equipment regularly for leaks.

CASQA California Stormwater Quality Association

Suggested Protocols

Loading and Unloading – General Guidelines

- Develop an operations plan that describes procedures for loading and/or unloading.
- Conduct loading and unloading in dry weather if possible.
- Cover designated loading/unloading areas to reduce exposure of materials to rain.
- Consider placing a seal or door skirt between delivery vehicles and building to prevent exposure to rain.
- Design loading/unloading area to prevent stormwater run-on, which would include grading or berming the area, and position roof downspouts so they direct stormwater away from the loading/unloading areas.
- Have employees load and unload all materials and equipment in covered areas such as building overhangs at loading docks if feasible.
- Load/unload only at designated loading areas.
- Use drip pans underneath hose and pipe connections and other leak-prone spots during liquid transfer operations, and when making and breaking connections. Several drip pans should be stored in a covered location near the liquid transfer area so that they are always available, yet protected from precipitation when not in use. Drip pans can be made specifically for railroad tracks. Drip pans must be cleaned periodically, and drip collected materials must be disposed of properly.
- Pave loading areas with concrete instead of asphalt.
- Avoid placing storm drains in the area.
- Grade and/or berm the loading/unloading area to a drain that is connected to a deadend.

Inspection

- Check loading and unloading equipment regularly for leaks, including valves, pumps, flanges and connections.
- Look for dust or fumes during loading or unloading operations.

Training

- Train employees (e.g., fork lift operators) and contractors on proper spill containment and cleanup.
- Have employees trained in spill containment and cleanup present during loading/unloading.
- Train employees in proper handling techniques during liquid transfers to avoid spills.
- Make sure forklift operators are properly trained on loading and unloading procedures.

Spill Response and Prevention

- Keep your Spill Prevention Control and Countermeasure (SPCC) Plan up-to-date.
- Contain leaks during transfer.
- Store and maintain appropriate spill cleanup materials in a location that is readily accessible and known to all and ensure that employees are familiar with the site's spill control plan and proper spill cleanup procedures.
- Have an emergency spill cleanup plan readily available.
- Use drip pans or comparable devices when transferring oils, solvents, and paints.

Other Considerations (Limitations and Regulations)

- Space and time limitations may preclude all transfers from being performed indoors or under cover.
- It may not be possible to conduct transfers only during dry weather.

Requirements

Costs

Costs should be low except when covering a large loading/unloading area.

Maintenance

- Conduct regular inspections and make repairs as necessary. The frequency of repairs will depend on the age of the facility.
- Check loading and unloading equipment regularly for leaks.
- Conduct regular broom dry-sweeping of area.

Supplemental Information

Further Detail of the BMP

Special Circumstances for Indoor Loading/Unloading of Materials

Loading or unloading of liquids should occur in the manufacturing building so that any spills that are not completely retained can be discharged to the sanitary sewer, treatment plant, or treated in a manner consistent with local sewer authorities and permit requirements.

- For loading and unloading tank trucks to above and below ground storage tanks, the following procedures should be used:
  - The area where the transfer takes place should be paved. If the liquid is reactive with the asphalt, Portland cement should be used to pave the area.
  - The transfer area should be designed to prevent run-on of stormwater from adjacent areas. Sloping the pad and using a curb, like a speed bump, around the uphill side of the transfer area should reduce run-on.

- The transfer area should be designed to prevent runoff of spilled liquids from the area. Sloping the area to a drain should prevent runoff. The drain should be connected to a dead-end sump or to the sanitary sewer. A positive control valve should be installed on the drain.

- For transfer from rail cars to storage tanks that must occur outside, use the following procedures:

  - Drip pans should be placed at locations where spillage may occur, such as hose connections, hose reels, and filler nozzles. Use drip pans when making and breaking connections.

  - Drip pan systems should be installed between the rails to collect spillage from tank cars.

References and Resources

California's Nonpoint Source Program Plan http://www.swrcb.ca.gov/nps/index.html

Clark County Storm Water Pollution Control Manual
http://www.co.clark.wa.us/pubworks/bmpman.pdf

King County Storm Water Pollution Control Manual http://dnr.metrokc.gov/wlr/dss/spcm.htm

Santa Clara Valley Urban Runoff Pollution Prevention Program http://www.scvurppp.org

The Storm Water Managers Resource Center http://www.stormwatercenter.net/

Outdoor Equipment Operations SC-32

Description

Outside process equipment operations and maintenance can contaminate stormwater runoff. Activities, such as grinding, painting, coating, sanding, degreasing or parts cleaning, landfills and waste piles, solid waste treatment and disposal, are examples of process operations that can lead to contamination of stormwater runoff. Source controls for outdoor process equipment operations and maintenance include reducing the amount of waste created, enclosing or covering all or some of the equipment, installing secondary containment, and training employees.

Objectives

- Cover
- Contain
- Educate
- Reduce/Minimize

Approach

Pollution Prevention

- Perform the activity during dry periods.
- Use non-toxic chemicals for maintenance and minimize or eliminate the use of solvents.

Targeted Constituents

Sediment	✓
Nutrients	
Trash	
Metals	✓
Bacteria	
Oil and Grease	✓
Organics	✓

Suggested Protocols

- Consider enclosing the activity in a building and connecting the floor drains to the sanitary sewer.
- Cover the work area with a permanent roof if possible.
- Minimize contact of stormwater with outside process equipment operations through berming and drainage routing (run-on prevention). If possible, connect process equipment area to public sewer or facility wastewater treatment system. Some municipalities require that secondary containment areas be connected to the sanitary sewer, prohibiting any hard connections to the storm drain.
- Dry clean the work area regularly.

Training

- Train employees to perform the activity during dry periods only or substituting benign materials for more toxic ones.
- Train employee and contractors in proper techniques for spill containment and cleanup. Employees should have the tools and knowledge to immediately begin cleaning up a spill should one occur.

Spill Response and Prevention

- Keep your Spill Prevention Control and Countermeasure (SPCC) Plan up-to-date.

- Have employees trained in emergency spill cleanup procedures present when dangerous waste, liquid chemicals, or other wastes are delivered.
- Place a stockpile of spill cleanup materials where it will be readily accessible.
- Prevent operator errors by using engineering safe guards and thus reducing accidental releases of pollutant.
- Inspect storage areas regularly for leaks or spills. Also check for structural failure, spills and overfills due to operator error, and/or failure of piping system.

Other Considerations

- Providing cover may be expensive.
- Space limitations may preclude enclosing some equipment.
- Storage sheds often must meet building and fire code requirements.

Requirements

Costs

Costs vary depending on the complexity of the operation and the amount of control necessary for stormwater pollution control.

Maintenance

- Conduct routine preventive maintenance, including checking process equipment for leaks.
- Clean the storm drain system regularly.

Supplemental Information

Further Detail of the BMP

Hydraulic/Treatment Modifications

If stormwater becomes polluted, it should be captured and treated. If you do not have your own process wastewater treatment system, consider discharging to the public sewer system. Use of the public sewer might be allowed under the following conditions:

- If the activity area is very small (less than a few hundred square feet), the local sewer authority may be willing to allow the area to remain uncovered with the drain connected to the public sewer.
- It may be possible under unusual circumstances to connect a much larger area to the public sewer, as long as the rate of stormwater discharges does not exceed the capacity of the wastewater treatment plant. The stormwater could be stored during the storm and then transferred to the public sewer when the normal flow is low, such as at night.

Industries that generate large volumes of process wastewater typically have their own treatment system and corresponding permit. These industries have the discretion to use their wastewater treatment system to treat stormwater within the constraints of their permit requirements for process treatment. It may also be possible for the industry to discharge the stormwater directly to an effluent outfall without treatment as long as the total loading of the discharged process

water and stormwater does not exceed the loading had a stormwater treatment device been used. This could be achieved by reducing the loading from the process wastewater treatment system. Check with your Regional Water Quality Control Board or local sewering agency, as this option would be subject to permit constraints and potentially regular monitoring.

References and Resources

California's Nonpoint Source Program Plan http://www.swrcb.ca.gov/nps/index.html

Clark County Storm Water Pollution Control Manual
http://www.co.clark.wa.us/pubworks/bmpman.pdf

King County Storm Water Pollution Control Manual http://dnr.metrokc.gov/wlr/dss/spcm.htm

Santa Clara Valley Urban Runoff Pollution Prevention Program http://www.scvurppp.org

The Stormwater Managers Resource Center http://www.stormwatercenter.net

Waste Handling & Disposal SC-34

Photo Credit: Geoff Brosseau

Description

Improper storage and handling of solid wastes can allow toxic compounds, oils and greases, heavy metals, nutrients, suspended solids, and other pollutants to enter stormwater runoff. The discharge of pollutants to stormwater from waste handling and disposal can be prevented and reduced by tracking waste generation, storage, and disposal; reducing waste generation and disposal through source reduction, reuse, and recycling; and preventing run-on and runoff.

Approach

Pollution Prevention

- Accomplish reduction in the amount of waste generated using the following source controls:
  - Production planning and sequencing
  - Process or equipment modification
  - Raw material substitution or elimination
  - Loss prevention and housekeeping
  - Waste segregation and separation
  - Close loop recycling
- Establish a material tracking system to increase awareness about material usage. This may reduce spills and minimize contamination, thus reducing the amount of waste produced.
- Recycle materials whenever possible.

Objectives

- Cover
- Contain
- Educate
- Reduce/Minimize
- Product Substitution

Targeted Constituents

Sediment	
Nutrients	
Trash	
Metals	✓
Bacteria	✓
Oil and Grease	✓
Organics	✓

CASQA California Stormwater Quality Association

Suggested Protocols

General

- Cover storage containers with leak proof lids or some other means. If waste is not in containers, cover all waste piles (plastic tarps are acceptable coverage) and prevent stormwater run-on and runoff with a berm. The waste containers or piles must be covered except when in use.
- Use drip pans or absorbent materials whenever grease containers are emptied by vacuum trucks or other means. Grease cannot be left on the ground. Collected grease must be properly disposed of as garbage.
- Check storage containers weekly for leaks and to ensure that lids are on tightly. Replace any that are leaking, corroded, or otherwise deteriorating.
- Sweep and clean the storage area regularly. If it is paved, do not hose down the area to a storm drain.
- Dispose of rinse and wash water from cleaning waste containers into a sanitary sewer if allowed by the local sewer authority. Do not discharge wash water to the street or storm drain.
- Transfer waste from damaged containers into safe containers.
- Take special care when loading or unloading wastes to minimize losses. Loading systems can be used to minimize spills and fugitive emission losses such as dust or mist. Vacuum transfer systems can minimize waste loss.

Controlling Litter

- Post "No Littering" signs and enforce anti-litter laws.
- Provide a sufficient number of litter receptacles for the facility.
- Clean out and cover litter receptacles frequently to prevent spillage.

Waste Collection

- Keep waste collection areas clean.
- Inspect solid waste containers for structural damage regularly. Repair or replace damaged containers as necessary.
- Secure solid waste containers; containers must be closed tightly when not in use.
- Do not fill waste containers with washout water or any other liquid.
- Ensure that only appropriate solid wastes are added to the solid waste container. Certain wastes such as hazardous wastes, appliances, fluorescent lamps, pesticides, etc., may not be disposed of in solid waste containers (see chemical/ hazardous waste collection section below).

- Do not mix wastes; this can cause chemical reactions, make recycling impossible, and complicate disposal.

Good Housekeeping

- Use all of the product before disposing of the container.
- Keep the waste management area clean at all times by sweeping and cleaning up spills immediately.
- Use dry methods when possible (e.g., sweeping, use of absorbents) when cleaning around restaurant/food handling dumpster areas. If water must be used after sweeping/using absorbents, collect water and discharge through grease interceptor to the sewer.

Chemical/Hazardous Wastes

- Select designated hazardous waste collection areas on-site.
- Store hazardous materials and wastes in covered containers and protect them from vandalism.
- Place hazardous waste containers in secondary containment.
- Make sure that hazardous waste is collected, removed, and disposed of only at authorized disposal areas.
- Stencil or demarcate storm drains on the facility's property with prohibitive message regarding waste disposal.

Run-on/Runoff Prevention

- Prevent stormwater run-on from entering the waste management area by enclosing the area or building a berm around the area.
- Prevent waste materials from directly contacting rain.
- Cover waste piles with temporary covering material such as reinforced tarpaulin, polyethylene, polyurethane, polypropyleneor hypalon.
- Cover the area with a permanent roof if feasible.
- Cover dumpsters to prevent rain from washing waste out of holes or cracks in the bottom of the dumpster.
- Move the activity indoor after ensuring all safety concerns such as fire hazard and ventilation are addressed.

Inspection

- Inspect and replace faulty pumps or hoses regularly to minimize the potential of releases and spills.
- Check waste management areas for leaking containers or spills.

- Repair leaking equipment including valves, lines, seals, or pumps promptly.

Training

- Train staff in pollution prevention measures and proper disposal methods.
- Train employees and contractors in proper spill containment and cleanup. The employee should have the tools and knowledge to immediately begin cleaning up a spill should one occur.
- Train employees and subcontractors in proper hazardous waste management.

Spill Response and Prevention

- Keep your Spill Prevention Control and Countermeasure (SPCC) Plan up-to-date.
- Have an emergency plan, equipment and trained personnel ready at all times to deal immediately with major spills
- Collect all spilled liquids and properly dispose of them.
- Store and maintain appropriate spill cleanup materials in a location known to all near the designated wash area.
- Ensure that vehicles transporting waste have spill prevention equipment that can prevent spills during transport. Spill prevention equipment includes:
  - Vehicles equipped with baffles for liquid waste
  - Trucks with sealed gates and spill guards for solid waste

Other Considerations (Limitations and Regulations)

Hazardous waste cannot be reused or recycled; it must be disposed of by a licensed hazardous waste hauler.

Requirements

Costs

Capital and O&M costs for these programs will vary substantially depending on the size of the facility and the types of waste handled. Costs should be low if there is an inventory program in place.

Maintenance

- None except for maintaining equipment for material tracking program.

Supplemental Information

Further Detail of the BMP

Land Treatment System

Minimize runoff of polluted stormwater from land application by:

- Choosing a site where slopes are under 6%, the soil is permeable, there is a low water table, it is located away from wetlands or marshes, and there is a closed drainage system

- Avoiding application of waste to the site when it is raining or when the ground is saturated with water
- Growing vegetation on land disposal areas to stabilize soils and reduce the volume of surface water runoff from the site
- Maintaining adequate barriers between the land application site and the receiving waters (planted strips are particularly good)
- Using erosion control techniques such as mulching and matting, filter fences, straw bales, diversion terracing, and sediment basins
- Performing routine maintenance to ensure the erosion control or site stabilization measures are working

Examples

The port of Long Beach has a state-of-the-art database for identifying potential pollutant sources, documenting facility management practices, and tracking pollutants.

References and Resources

California's Nonpoint Source Program Plan http://www.swrcb.ca.gov/nps/index.html

Clark County Storm Water Pollution Control Manual
http://www.co.clark.wa.us/pubworks/bmpman.pdf

Solid Waste Container Best Management Practices – Fact Sheet On-Line Resources – Environmental Health and Safety. Harvard University. 2002.

King County Storm Water Pollution Control Manual http://dnr.metrokc.gov/wlr/dss/spcm.htm

Pollution from Surface Cleaning Folder. 1996. Bay Area Stormwater Management Agencies Association (BASMAA). http://www.basmaa.org

Santa Clara Valley Urban Runoff Pollution Prevention Program http://www.scvurppp.org

The Storm Water Managers Resource Center http://www.stormwatercenter.net/

Safer Alternative Products SC-35

Description

Promote the use of less harmful products and products that contain little or no TMDL pollutants. Alternatives exist for most product classes including chemical fertilizers, pesticides, cleaning solutions, janitorial chemicals, automotive and paint products, and consumables (batteries, fluorescent lamps).

Approach

Pattern a new program after the many established programs around the state and country. Integrate this best management practice as much as possible with existing programs at your facility.

Develop a comprehensive program based on:

- The "Precautionary Principle," which is an alternative to the "Risk Assessment" model that says it's acceptable to use a potentially harmful product until physical evidence of its harmful effects are established and deemed too costly from an environmental or public health perspective. For instance, a risk assessment approach might say it's acceptable to use a pesticide until there is direct proof of an environmental impact. The Precautionary Principle approach is used to evaluate whether a given product is safe, whether it is really necessary, and whether alternative products would perform just as well.
- Environmentally Preferable Purchasing Program to minimize the purchase of products containing hazardous ingredients used in the facility's custodial services, fleet maintenance, and facility maintenance in favor of using alternate products that pose less risk to employees and to the environment.
- Integrated Pest Management (IPM) or Less-Toxic Pesticide Program, which uses a pest management approach that minimizes the use of toxic chemicals and gets rid of pests by methods that pose a lower risk to employees, the public, and the environment.
- Energy Efficiency Program including no-cost and low-cost energy conservation and efficiency actions that can reduce both energy consumption and electricity bills, along with long-term energy efficiency investments.

Consider the following mechanisms for developing and implementing a comprehensive program:

- Policies

Objectives

- Educate
- Reduce/Minimize
- Product Substitution

Targeted Constituents

Sediment	
Nutrients	✓
Trash	
Metals	✓
Bacteria	
Oil and Grease	✓
Organics	✓

CASQA California Stormwater Quality Association

- Procedures
  - Standard operating procedures (SOPs)
  - Purchasing guidelines and procedures
  - Bid packages (services and supplies)
- Materials
  - Preferred or approved product and supplier lists
  - Product and supplier evaluation criteria
  - Training sessions and manuals
  - Fact sheets for employees

Implement this BMP in conjunction with the Vehicle and Equipment Management fact sheets (SC20 – SC22) and SC41, Building and Grounds Maintenance.

Training

- Employees who handle potentially harmful materials in the use of safer alternatives.
- Purchasing departments should be encouraged to procure less hazardous materials and products that contain little or no harmful substances or TMDL pollutants.

Regulations

This BMP has no regulatory requirements. Existing regulations already encourage facilities to reduce the use of hazardous materials through incentives such as reduced:

- Specialized equipment storage and handling requirements,
- Storm water runoff sampling requirements,
- Training and licensing requirements, and
- Record keeping and reporting requirements.

Equipment

- There are no major equipment requirements to this BMP.

Limitations

- Alternative products may not be available, suitable, or effective in every case.

Requirements

Cost Considerations

- The primary cost is for staff time to: 1) develop new policies and procedures and 2) educate purchasing departments and employees who handle potentially harmful materials about the availability, procurement, and use of safer alternatives.

- Some alternative products may be slightly more expensive than conventional products.

Supplemental Information

Employees and contractors / service providers can both be educated about safer alternatives by using information developed by a number of organizations including the references and resources listed below.

The following discussion provides some general information on safer alternatives. More specific information on particular hazardous materials and the available alternatives may be found in the references and resources listed below.

- Automotive products – Less toxic alternatives are not available for many automotive products, especially engine fluids. But there are alternatives to grease lubricants, car polishes, degreasers, and windshield washer solution. Rerefined motor oil is also available.
- Vehicle/Trailer lubrication – Fifth wheel bearings on trucks require routine lubrication. Adhesive lubricants are available to replace typical chassis grease.
- Cleaners – Vegetables-based or citrus-based soaps are available to replace petroleum-based soaps/detergents.
- Paint products – Water-based paints, wood preservatives, stains, and finishes are available.
- Pesticides – Specific alternative products or methods exist to control most insects, fungi, and weeds.
- Chemical Fertilizers – Compost and soil amendments are natural alternatives.
- Consumables – Manufacturers have either reduced or are in the process of reducing the amount of heavy metals in consumables such as batteries and fluorescent lamps. All fluorescent lamps contain mercury, however low-mercury containing lamps are now available from most hardware and lighting stores. Fluorescent lamps are also more energy efficient than the average incandescent lamp.
- Janitorial chemicals – Even biodegradable soap can harm fish and wildlife before it biodegrades. Biodegradable does not mean non-toxic. Safer products and procedures are available for floor stripping and cleaning, as well as carpet, glass, metal, and restroom cleaning and disinfecting.

Examples

There are a number of business and trade associations, and communities with effective programs. Some of the more prominent are listed below in the references and resources section.

References and Resources

Note: Many of these references provide alternative products for materials that typically are used inside and disposed to the sanitary sewer as well as alternatives to products that usually end up in the storm drain.

General Sustainable Practices and Pollution Prevention Including Pollutant-Specific Information

California Department of Toxic Substances Control (www.dtsc.ca.gov)

California Integrated Waste Management Board (www.ciwmb.ca.gov)

City of Santa Monica (www.santa-monica.org/environment)

City of Palo Alto (www.city.palo-alto.ca.us/cleanbay)

City and County of San Francisco, Department of the Environment (www.ci.sf.ca.us/sfenvironment)

Earth 911 (www.earth911.org/master.asp)

Environmental Finance Center Region IX (www.greenstart.org/efc9)

Flex Your Power (www.flexyourpower.ca.gov)

GreenBiz.com (www.greenbiz.com)

Green Business Program (www.abag.org/bayarea/enviro/gbus/gb.html)

Pacific Industrial and Business Association (www.piba.org)

Sacramento Clean Water Business Partners (www.sacstormwater.org)

USEPA BMP fact sheet – Alternative products (http://cfpub.epa.gov/npdes/stormwater/menuofbmps/poll_2.cfm)

USEPA Region IX Pollution Prevention Program (www.epa.gov/region09/p2)

Western Regional Pollution Prevention Network (www.westp2net.org)

Metals (mercury, copper)

National Electrical Manufacturers Association - Environment, Health and Safety (www.nema.org)

Sustainable Conservation (www.suscon.org)

- Auto Recycling Project
- Brake Pad Partnership

Pesticides and Chemical Fertilizers

Bio-Integral Resource Center (www.birc.org)

California Department of Pesticide Regulation (www.cdpr.ca.gov)

University of California Statewide IPM Program (www.ipm.ucdavis.edu/default.html)

Dioxins

Bay Area Dioxins Project (http://dioxin.abag.ca.gov/)

Building & Grounds Maintenance SC-41

Objectives

- Cover
- Contain
- Educate
- Reduce/Minimize
- Product Substitution

Targeted Constituents

Sediment	✓
Nutrients	✓
Trash	
Metals	✓
Bacteria	✓
Oil and Grease	
Organics	

Description

Stormwater runoff from building and grounds maintenance activities can be contaminated with toxic hydrocarbons in solvents, fertilizers and pesticides, suspended solids, heavy metals, abnormal pH, and oils and greases. Utilizing the protocols in this fact sheet will prevent or reduce the discharge of pollutants to stormwater from building and grounds maintenance activities by washing and cleaning up with as little water as possible, following good landscape management practices, preventing and cleaning up spills immediately, keeping debris from entering the storm drains, and maintaining the stormwater collection system.

Approach

Reduce potential for pollutant discharge through source control pollution prevention and BMP implementation. Successful implementation depends on effective training of employees on applicable BMPs and general pollution prevention strategies and objectives.

Pollution Prevention

- Switch to non-toxic chemicals for maintenance when possible.
- Choose cleaning agents that can be recycled.
- Encourage proper lawn management and landscaping, including use of native vegetation.

CASQA California Stormwater Quality Association

- Encourage use of Integrated Pest Management techniques for pest control.
- Encourage proper onsite recycling of yard trimmings.
- Recycle residual paints, solvents, lumber, and other material as much as possible.

Suggested Protocols

Pressure Washing of Buildings, Rooftops, and Other Large Objects

- In situations where soaps or detergents are used and the surrounding area is paved, pressure washers must use a water collection device that enables collection of wash water and associated solids. A sump pump, wet vacuum or similarly effective device must be used to collect the runoff and loose materials. The collected runoff and solids must be disposed of properly.
- If soaps or detergents are not used, and the surrounding area is paved, wash runoff does not have to be collected but must be screened. Pressure washers must use filter fabric or some other type of screen on the ground and/or in the catch basin to trap the particles in wash water runoff.
- If you are pressure washing on a grassed area (with or without soap), runoff must be dispersed as sheet flow as much as possible, rather than as a concentrated stream. The wash runoff must remain on the grass and not drain to pavement.

Landscaping Activities

- Dispose of grass clippings, leaves, sticks, or other collected vegetation as garbage, or by composting. Do not dispose of collected vegetation into waterways or storm drainage systems.
- Use mulch or other erosion control measures on exposed soils.

Building Repair, Remodeling, and Construction

- Do not dump any toxic substance or liquid waste on the pavement, the ground, or toward a storm drain.
- Use ground or drop cloths underneath outdoor painting, scraping, and sandblasting work, and properly dispose of collected material daily.
- Use a ground cloth or oversized tub for activities such as paint mixing and tool cleaning.
- Clean paintbrushes and tools covered with water-based paints in sinks connected to sanitary sewers or in portable containers that can be dumped into a sanitary sewer drain. Brushes and tools covered with non-water-based paints, finishes, or other materials must be cleaned in a manner that enables collection of used solvents (e.g., paint thinner, turpentine, etc.) for recycling or proper disposal.
- Use a storm drain cover, filter fabric, or similarly effective runoff control mechanism if dust, grit, wash water, or other pollutants may escape the work area and enter a catch basin. This is particularly necessary on rainy days. The containment device(s) must be in place at the beginning of the work day, and accumulated dirty runoff and solids must be collected and disposed of before removing the containment device(s) at the end of the work day.

- If you need to de-water an excavation site, you may need to filter the water before discharging to a catch basin or off-site. If directed off-site, you should direct the water through hay bales and filter fabric or use other sediment filters or traps.
- Store toxic material under cover during precipitation events and when not in use. A cover would include tarps or other temporary cover material.

Mowing, Trimming, and Planting

- Dispose of leaves, sticks, or other collected vegetation as garbage, by composting or at a permitted landfill. Do not dispose of collected vegetation into waterways or storm drainage systems.
- Use mulch or other erosion control measures when soils are exposed.
- Place temporarily stockpiled material away from watercourses and drain inlets, and berm or cover stockpiles to prevent material releases to the storm drain system.
- Consider an alternative approach when bailing out muddy water: do not put it in the storm drain; pour over landscaped areas.
- Use hand weeding where practical.

Fertilizer and Pesticide Management

- Follow all federal, state, and local laws and regulations governing the use, storage, and disposal of fertilizers and pesticides and training of applicators and pest control advisors.
- Use less toxic pesticides that will do the job when applicable. Avoid use of copper-based pesticides if possible.
- Do not use pesticides if rain is expected.
- Do not mix or prepare pesticides for application near storm drains.
- Use the minimum amount needed for the job.
- Calibrate fertilizer distributors to avoid excessive application.
- Employ techniques to minimize off-target application (e.g., spray drift) of pesticides, including consideration of alternative application techniques.
- Apply pesticides only when wind speeds are low.
- Fertilizers should be worked into the soil rather than dumped or broadcast onto the surface.
- Irrigate slowly to prevent runoff and then only as much as is needed.
- Clean pavement and sidewalk if fertilizer is spilled on these surfaces before applying irrigation water.
- Dispose of empty pesticide containers according to the instructions on the container label.

- Use up the pesticides. Rinse containers, and use rinse water as product. Dispose of unused pesticide as hazardous waste.
- Implement storage requirements for pesticide products with guidance from the local fire department and County Agricultural Commissioner. Provide secondary containment for pesticides.

Inspection

- Inspect irrigation system periodically to ensure that the right amount of water is being applied and that excessive runoff is not occurring. Minimize excess watering and repair leaks in the irrigation system as soon as they are observed.

Training

- Educate and train employees on pesticide use and in pesticide application techniques to prevent pollution.
- Train employees and contractors in proper techniques for spill containment and cleanup.
- Be sure the frequency of training takes into account the complexity of the operations and the nature of the staff.

Spill Response and Prevention

- Keep your Spill Prevention Control and Countermeasure (SPCC) Plan up-to-date.
- Place a stockpile of spill cleanup materials, such as brooms, dustpans, and vacuum sweepers (if desired) near the storage area where it will be readily accessible.
- Have employees trained in spill containment and cleanup present during the loading/unloading of dangerous wastes, liquid chemicals, or other materials.
- Familiarize employees with the Spill Prevention Control and Countermeasure Plan.
- Clean up spills immediately.

Other Considerations

Alternative pest/weed controls may not be available, suitable, or effective in many cases.

Requirements

Costs

- Cost will vary depending on the type and size of facility.
- Overall costs should be low in comparison to other BMPs.

Maintenance

Sweep paved areas regularly to collect loose particles. Wipe up spills with rags and other absorbent material immediately, do not hose down the area to a storm drain.

Supplemental Information

Further Detail of the BMP

Fire Sprinkler Line Flushing

Building fire sprinkler line flushing may be a source of non-stormwater runoff pollution. The water entering the system is usually potable water, though in some areas it may be non-potable reclaimed wastewater. There are subsequent factors that may drastically reduce the quality of the water in such systems. Black iron pipe is usually used since it is cheaper than potable piping, but it is subject to rusting and results in lower quality water. Initially, the black iron pipe has an oil coating to protect it from rusting between manufacture and installation; this will contaminate the water from the first flush but not from subsequent flushes. Nitrates, poly-phosphates and other corrosion inhibitors, as well as fire suppressants and antifreeze may be added to the sprinkler water system. Water generally remains in the sprinkler system a long time (typically a year) and between flushes may accumulate iron, manganese, lead, copper, nickel, and zinc. The water generally becomes anoxic and contains living and dead bacteria and breakdown products from chlorination. This may result in a significant BOD problem and the water often smells. Consequently dispose fire sprinkler line flush water into the sanitary sewer. Do not allow discharge to storm drain or infiltration due to potential high levels of pollutants in fire sprinkler line water.

References and Resources

California's Nonpoint Source Program Plan http://www.swrcb.ca.gov/nps/index.html

Clark County Storm Water Pollution Control Manual
http://www.co.clark.wa.us/pubworks/bmpman.pdf

King County Storm Water Pollution Control Manual http://dnr.metrokc.gov/wlr/dss/spcm.htm

Mobile Cleaners Pilot Program: Final Report. 1997. Bay Area Stormwater Management Agencies Association (BASMAA). http://www.basmaa.org/

Pollution from Surface Cleaning Folder. 1996. Bay Area Stormwater Management Agencies Association (BASMAA). http://www.basmaa.org/

Santa Clara Valley Urban Runoff Pollution Prevention Program http://www.scvurppp.org

The Storm Water Managers Resource Center http://www.stormwatercenter.net/

Building Repair and Construction SC-42

Objectives

- Cover
- Contain
- Educate
- Reduce/Minimize
- Recycle

Targeted Constituents

Sediment	✓
Nutrients	
Trash	✓
Metals	✓
Bacteria	
Oil and Grease	✓
Organics	✓

Description

Modifications are common particularly at large industrial sites. The activity may vary from minor and normal building repair to major remodeling, or the construction of new facilities. These activities can generate pollutants including solvents, paints, paint and varnish removers, finishing residues, spent thinners, soap cleaners, kerosene, asphalt and concrete materials, adhesive residues, and old asbestos installation. Protocols in this fact sheet are intended to prevent or reduce the discharge of pollutants to stormwater from building repair, remodeling, and construction by using soil erosion controls, enclosing or covering building material storage areas, using good housekeeping practices, using safer alternative products, and training employees.

Approach

Pollution Prevention

- Recycle residual paints, solvents, lumber, and other materials to the maximum extent practical.
- Buy recycled products to the maximum extent practical.
- Inform on-site contractors of company policy on these matters and include appropriate provisions in their contract to ensure certain proper housekeeping and disposal practices are implemented.

CASQA California Stormwater Quality Association

- Make sure that nearby storm drains are well marked to minimize the chance of inadvertent disposal of residual paints and other liquids.

Suggested Protocols

Repair & Remodeling

- Follow BMPs identified in Construction BMP Handbook.
- Maintain good housekeeping practices while work is underway.
- Keep the work site clean and orderly. Remove debris in a timely fashion. Sweep the area.
- Cover materials of particular concern that must be left outside, particularly during the rainy season.
- Do not dump waste liquids down the storm drain.
- Dispose of wash water, sweepings, and sediments properly.
- Store materials properly that are normally used in repair and remodeling such as paints and solvents.
- Sweep out the gutter or wash the gutter and trap the particles at the outlet of the downspout if when repairing roofs, small particles have accumulated in the gutter. A sock or geofabric placed over the outlet may effectively trap the materials. If the downspout is tight lined, place a temporary plug at the first convenient point in the storm drain and pump out the water with a vactor truck, and clean the catch basin sump where you placed the plug.
- Properly store and dispose waste materials generated from construction activities. See Construction BMP Handbook.
- Clean the storm drain system in the immediate vicinity of the construction activity after it is completed.

Painting

- Enclose painting operations consistent with local air quality regulations and OSHA.
- Local air pollution regulations may, in many areas of the state, specify painting procedures which if properly carried out are usually sufficient to protect water quality.
- Develop paint handling procedures for proper use, storage, and disposal of paints.
- Transport paint and materials to and from job sites in containers with secure lids and tied down to the transport vehicle.
- Test and inspect spray equipment prior to starting to paint. Tighten all hoses and connections and do not overfill paint containers.
- Mix paint indoors before using so that any spill will not be exposed to rain. Do so even during dry weather because cleanup of a spill will never be 100% effective.
- Transfer and load paint and hot thermoplastic away from storm drain inlets.

- Do not transfer or load paint near storm drain inlets.
- Plug nearby storm drain inlets prior to starting painting and remove plugs when job is complete when there is significant risk of a spill reaching storm drains.
- Cover nearby storm drain inlets prior to starting work if sand blasting is used to remove paint.
- Use a ground cloth to collect the chips if painting requires scraping or sand blasting of the existing surface. Dispose the residue properly.
- Cover or enclose painting operations properly to avoid drift.
- Clean the application equipment in a sink that is connected to the sanitary sewer if using water based paints.
- Capture all cleanup-water and dispose of properly.
- Dispose of paints containing lead or tributyl tin and considered a hazardous waste properly.
- Store leftover paints if they are to be kept for the next job properly, or dispose properly.
- Recycle paint when possible. Dispose of paint at an appropriate household hazardous waste facility.

Training

Proper education of off-site contractors is often overlooked. The conscientious efforts of well trained employees can be lost by unknowing off-site contractors, so make sure they are well informed about what they are expected to do.

Spill Response and Prevention

- Keep your Spill Prevention Control and Countermeasure (SPCC) Plan up-to-date.
- Place a stockpile of spill cleanup materials where it will be readily accessible.
- Clean up spills immediately.
- Excavate and remove the contaminated (stained) soil if a spill occurs on dirt.

Limitations

- This BMP is for minor construction only. The State's General Construction Activity Stormwater Permit has more requirements for larger projects. The companion "Construction Best Management Practice Handbook" contains specific guidance and best management practices for larger-scale projects.
- Hazardous waste that cannot be reused or recycled must be disposed of by a licensed hazardous waste hauler.
- Be certain that actions to help stormwater quality are consistent with Cal- and Fed-OSHA and air quality regulations.

SC-42 Building Repair and Construction

Requirements

Costs

These BMPs are generally low to modest in cost.

Maintenance

N/A

Supplemental Information

Further Detail of the BMP

Soil/Erosion Control

If the work involves exposing large areas of soil, employ the appropriate soil erosion and control techniques. See the Construction Best Management Practice Handbook. If old buildings are being torn down and not replaced in the near future, stabilize the site using measures described in SC-40 Contaminated or Erodible Areas.

If a building is to be placed over an open area with a storm drainage system, make sure the storm inlets within the building are covered or removed, or the storm line is connected to the sanitary sewer. If because of the remodeling a new drainage system is to be installed or the existing system is to be modified, consider installing catch basins as they serve as effective "in-line" treatment devices. See Treatment Control Fact Sheet TC-20 Wet Pond/Basin in Section 5 of the New Development and Redevelopment Handbook regarding design criteria. Include in the catch basin a "turn-down" elbow or similar device to trap floatables.

References and Resources

California's Nonpoint Source Program Plan http://www.swrcb.ca.gov/nps/index.html

Clark County Storm Water Pollution Control Manual
http://www.co.clark.wa.us/pubworks/bmpman.pdf

King County Storm Water Pollution Control Manual http://dnr.metrokc.gov/wlr/dss/spcm.htm

Santa Clara Valley Urban Runoff Pollution Prevention Program http://www.scvurppp.org

The Storm Water Managers Resource Center http://www.stormwatercenter.net/

Parking/Storage Area Maintenance SC-43

Objectives

- Cover
- Contain
- Educate
- Reduce/Minimize
- Product Substitution

Targeted Constituents

Sediment	✓
Nutrients	
Trash	✓
Metals	✓
Bacteria	
Oil and Grease	✓
Organics	✓

Description

Parking lots and storage areas can contribute a number of substances, such as trash, suspended solids, hydrocarbons, oil and grease, and heavy metals that can enter receiving waters through stormwater runoff or non-stormwater discharges. The protocols in this fact sheet are intended to prevent or reduce the discharge of pollutants from parking/storage areas and include using good housekeeping practices, following appropriate cleaning BMPs, and training employees.

Approach

The goal of this program is to ensure stormwater pollution prevention practices are considered when conducting activities on or around parking areas and storage areas to reduce potential for pollutant discharge to receiving waters. Successful implementation depends on effective training of employees on applicable BMPs and general pollution prevention strategies and objectives.

Pollution Prevention

- Encourage alternative designs and maintenance strategies for impervious parking lots. (See New Development and Redevelopment BMP Handbook)
- Keep accurate maintenance logs to evaluate BMP implementation.

CASQA California Stormwater Quality Association

SC-43 Parking/Storage Area Maintenance

Suggested Protocols

General

- Keep the parking and storage areas clean and orderly. Remove debris in a timely fashion.
- Allow sheet runoff to flow into biofilters (vegetated strip and swale) and/or infiltration devices.
- Utilize sand filters or oleophilic collectors for oily waste in low quantities.
- Arrange rooftop drains to prevent drainage directly onto paved surfaces.
- Design lot to include semi-permeable hardscape.
- Discharge soapy water remaining in mop or wash buckets to the sanitary sewer through a sink, toilet, clean-out, or wash area with drain.

Controlling Litter

- Post "No Littering" signs and enforce anti-litter laws.
- Provide an adequate number of litter receptacles.
- Clean out and cover litter receptacles frequently to prevent spillage.
- Provide trash receptacles in parking lots to discourage litter.
- Routinely sweep, shovel, and dispose of litter in the trash.

Surface Cleaning

- Use dry cleaning methods (e.g., sweeping, vacuuming) to prevent the discharge of pollutants into the stormwater conveyance system if possible.
- Establish frequency of public parking lot sweeping based on usage and field observations of waste accumulation.
- Sweep all parking lots at least once before the onset of the wet season.
- Follow the procedures below if water is used to clean surfaces:
  - Block the storm drain or contain runoff.
  - Collect and pump wash water to the sanitary sewer or discharge to a pervious surface. Do not allow wash water to enter storm drains.
  - Dispose of parking lot sweeping debris and dirt at a landfill.
- Follow the procedures below when cleaning heavy oily deposits:
  - Clean oily spots with absorbent materials.
  - Use a screen or filter fabric over inlet, then wash surfaces.

- Do not allow discharges to the storm drain.
- Vacuum/pump discharges to a tank or discharge to sanitary sewer.
- Appropriately dispose of spilled materials and absorbents.

Surface Repair

- Preheat, transfer or load hot bituminous material away from storm drain inlets.
- Apply concrete, asphalt, and seal coat during dry weather to prevent contamination from contacting stormwater runoff.
- Cover and seal nearby storm drain inlets where applicable (with waterproof material or mesh) and manholes before applying seal coat, slurry seal, etc. Leave covers in place until job is complete and all water from emulsified oil sealants has drained or evaporated. Clean any debris from these covered manholes and drains for proper disposal.
- Use only as much water as necessary for dust control, to avoid runoff.
- Catch drips from paving equipment that is not in use with pans or absorbent material placed under the machines. Dispose of collected material and absorbents properly.

Inspection

- Have designated personnel conduct inspections of parking facilities and stormwater conveyance systems associated with parking facilities on a regular basis.
- Inspect cleaning equipment/sweepers for leaks on a regular basis.

Training

- Provide regular training to field employees and/or contractors regarding cleaning of paved areas and proper operation of equipment.
- Train employees and contractors in proper techniques for spill containment and cleanup.

Spill Response and Prevention

- Keep your Spill Prevention Control and Countermeasure (SPCC) Plan up-to-date.
- Place a stockpile of spill cleanup materials where it will be readily accessible or at a central location.
- Clean up fluid spills immediately with absorbent rags or material.
- Dispose of spilled material and absorbents properly.

Other Considerations

Limitations related to sweeping activities at large parking facilities may include high equipment costs, the need for sweeper operator training, and the inability of current sweeper technology to remove oil and grease.

SC-43 Parking/Storage Area Maintenance

Requirements

Costs

Cleaning/sweeping costs can be quite large. Construction and maintenance of stormwater structural controls can be quite expensive as well.

Maintenance

- Sweep parking lot regularly to minimize cleaning with water.
- Clean out oil/water/sand separators regularly, especially after heavy storms.
- Clean parking facilities regularly to prevent accumulated wastes and pollutants from being discharged into conveyance systems during rainy conditions.

Supplemental Information

Further Detail of the BMP

Surface Repair

Apply concrete, asphalt, and seal coat during dry weather to prevent contamination from contacting stormwater runoff. Where applicable, cover and seal nearby storm drain inlets (with waterproof material or mesh) and manholes before applying seal coat, slurry seal, etc. Leave covers in place until job is complete and all water from emulsified oil sealants has drained or evaporated. Clean any debris from these covered manholes and drains for proper disposal. Only use only as much water as is necessary for dust control to avoid runoff.

References and Resources

California's Nonpoint Source Program Plan http://www.swrcb.ca.gov/nps/index.html

Clark County Storm Water Pollution Control Manual
http://www.co.clark.wa.us/pubworks/bmpman.pdf

King County Storm Water Pollution Control Manual http://dnr.metrokc.gov/wlr/dss/spcm.htm

Pollution from Surface Cleaning Folder. 1996. Bay Area Stormwater Management Agencies Association (BASMAA). http://www.basmaa.org/

Oregon Association of Clean Water Agencies. Oregon Municipal Stormwater Toolbox for Maintenance Practices. June 1998.

Santa Clara Valley Urban Runoff Pollution Prevention Program http://www.scvurppp.org

The Storm Water Managers Resource Center http://www.stormwatercenter.net/

Drainage System Maintenance SC-44

Objectives

- Cover
- Contain
- Educate
- Reduce/Minimize

Description

As a consequence of its function, the stormwater conveyance system collects and transports urban runoff and stormwater that may contain certain pollutants. The protocols in this fact sheet are intended to reduce pollutants reaching receiving waters through proper conveyance system operation and maintenance.

Targeted Constituents

Sediment	✓
Nutrients	
Trash	✓
Metals	
Bacteria	✓
Oil and Grease	
Organics	

Approach

Pollution Prevention

Maintain catch basins, stormwater inlets, and other stormwater conveyance structures on a regular basis to remove pollutants, reduce high pollutant concentrations during the first flush of storms, prevent clogging of the downstream conveyance system, restore catch basins' sediment trapping capacity, and ensure the system functions properly hydraulically to avoid flooding.

Suggested Protocols

Catch Basins/Inlet Structures

- Staff should regularly inspect facilities to ensure compliance with the following:
  - Immediate repair of any deterioration threatening structural integrity.
  - Cleaning before the sump is 40% full. Catch basins should be cleaned as frequently as needed to meet this standard.
  - Stenciling of catch basins and inlets (see SC34 Waste Handling and Disposal).

- Clean catch basins, storm drain inlets, and other conveyance structures before the wet season to remove sediments and debris accumulated during the summer.
- Conduct inspections more frequently during the wet season for problem areas where sediment or trash accumulates more often. Clean and repair as needed.
- Keep accurate logs of the number of catch basins cleaned.
- Store wastes collected from cleaning activities of the drainage system in appropriate containers or temporary storage sites in a manner that prevents discharge to the storm drain.
- Dewater the wastes if necessary with outflow into the sanitary sewer if permitted. Water should be treated with an appropriate filtering device prior to discharge to the sanitary sewer. If discharge to the sanitary sewer is not allowed, water should be pumped or vacuumed to a tank and properly disposed. Do not dewater near a storm drain or stream.

Storm Drain Conveyance System

- Locate reaches of storm drain with deposit problems and develop a flushing schedule that keeps the pipe clear of excessive buildup.
- Collect and pump flushed effluent to the sanitary sewer for treatment whenever possible.

Pump Stations

- Clean all storm drain pump stations prior to the wet season to remove silt and trash.
- Do not allow discharge to reach the storm drain system when cleaning a storm drain pump station or other facility.
- Conduct routine maintenance at each pump station.
- Inspect, clean, and repair as necessary all outlet structures prior to the wet season.

Open Channel

- Modify storm channel characteristics to improve channel hydraulics, increase pollutant removals, and enhance channel/creek aesthetic and habitat value.
- Conduct channel modification/improvement in accordance with existing laws. Any person, government agency, or public utility proposing an activity that will change the natural (emphasis added) state of any river, stream, or lake in California, must enter into a Steam or Lake Alteration Agreement with the Department of Fish and Game. The developer-applicant should also contact local governments (city, county, special districts), other state agencies (SWRCB, RWQCB, Department of Forestry, Department of Water Resources), and Federal Corps of Engineers and USFWS.

Illicit Connections and Discharges

- Look for evidence of illegal discharges or illicit connections during routine maintenance of conveyance system and drainage structures:
  - Is there evidence of spills such as paints, discoloring, etc?

- Are there any odors associated with the drainage system?
- Record locations of apparent illegal discharges/illicit connections?
- Track flows back to potential dischargers and conduct aboveground inspections. This can be done through visual inspection of upgradient manholes or alternate techniques including zinc chloride smoke testing, fluorometric dye testing, physical inspection testing, or television camera inspection.
- Eliminate the discharge once the origin of flow is established.

- Stencil or demarcate storm drains, where applicable, to prevent illegal disposal of pollutants. Storm drain inlets should have messages such as "Dump No Waste Drains to Stream" stenciled next to them to warn against ignorant or intentional dumping of pollutants into the storm drainage system.
- Refer to fact sheet SC-10 Non-Stormwater Discharges.

Illegal Dumping

- Inspect and clean up hot spots and other storm drainage areas regularly where illegal dumping and disposal occurs.
- Establish a system for tracking incidents. The system should be designed to identify the following:
  - Illegal dumping hot spots
  - Types and quantities (in some cases) of wastes
  - Patterns in time of occurrence (time of day/night, month, or year)
  - Mode of dumping (abandoned containers, "midnight dumping" from moving vehicles, direct dumping of materials, accidents/spills)
  - Responsible parties
- Post "No Dumping" signs in problem areas with a phone number for reporting dumping and disposal. Signs should also indicate fines and penalties for illegal dumping.
- Refer to fact sheet SC-10 Non-Stormwater Discharges.

Training

- Train crews in proper maintenance activities, including record keeping and disposal.
- Allow only properly trained individuals to handle hazardous materials/wastes.
- Have staff involved in detection and removal of illicit connections trained in the following:
  - OSHA-required Health and Safety Training (29 CFR 1910.120) plus annual refresher training (as needed).

- OSHA Confined Space Entry training (Cal-OSHA Confined Space, Title 8 and Federal OSHA 29 CFR 1910.146).

- Procedural training (field screening, sampling, smoke/dye testing, TV inspection).

Spill Response and Prevention

- Investigate all reports of spills, leaks, and/or illegal dumping promptly.
- Clean up all spills and leaks using "dry" methods (with absorbent materials and/or rags) or dig up, remove, and properly dispose of contaminated soil.
- Refer to fact sheet SC-11 Spill Prevention, Control, and Cleanup.

Other Considerations (Limitations and Regulations)

- Clean-up activities may create a slight disturbance for local aquatic species. Access to items and material on private property may be limited. Trade-offs may exist between channel hydraulics and water quality/riparian habitat. If storm channels or basins are recognized as wetlands, many activities, including maintenance, may be subject to regulation and permitting.
- Storm drain flushing is most effective in small diameter pipes (36-inch diameter pipe or less, depending on water supply and sediment collection capacity). Other considerations associated with storm drain flushing may include the availability of a water source, finding a downstream area to collect sediments, liquid/sediment disposal, and prohibition against disposal of flushed effluent to sanitary sewer in some areas.
- Regulations may include adoption of substantial penalties for illegal dumping and disposal.
- Local municipal codes may include sections prohibiting discharge of soil, debris, refuse, hazardous wastes, and other pollutants into the storm drain system.

Requirements

Costs

- An aggressive catch basin cleaning program could require a significant capital and O&M budget.
- The elimination of illegal dumping is dependent on the availability, convenience, and cost of alternative means of disposal. The primary cost is for staff time. Cost depends on how aggressively a program is implemented. Other cost considerations for an illegal dumping program include:

  - Purchase and installation of signs.

  - Rental of vehicle(s) to haul illegally-disposed items and material to landfills.

  - Rental of heavy equipment to remove larger items (e.g., car bodies) from channels.

  - Purchase of landfill space to dispose of illegally-dumped items and material.

- Methods used for illicit connection detection (smoke testing, dye testing, visual inspection, and flow monitoring) can be costly and time-consuming. Site-specific factors, such as the level of impervious area, the density and ages of buildings, and type of land use will determine the level of investigation necessary.

Maintenance

- Two-person teams may be required to clean catch basins with vactor trucks.
- Teams of at least two people plus administrative personnel are required to identify illicit discharges, depending on the complexity of the storm sewer system.
- Arrangements must be made for proper disposal of collected wastes.
- Technical staff are required to detect and investigate illegal dumping violations.

Supplemental Information

Further Detail of the BMP

Storm Drain Flushing

Flushing is a common maintenance activity used to improve pipe hydraulics and to remove pollutants in storm drainage systems. Flushing may be designed to hydraulically convey accumulated material to strategic locations, such as an open channel, another point where flushing will be initiated, or the sanitary sewer and the treatment facilities, thus preventing resuspension and overflow of a portion of the solids during storm events. Flushing prevents "plug flow" discharges of concentrated pollutant loadings and sediments. Deposits can hinder the designed conveyance capacity of the storm drain system and potentially cause backwater conditions in severe cases of clogging.

Storm drain flushing usually takes place along segments of pipe with grades that are too flat to maintain adequate velocity to keep particles in suspension. An upstream manhole is selected to place an inflatable device that temporarily plugs the pipe. Further upstream, water is pumped into the line to create a flushing wave. When the upstream reach of pipe is sufficiently full to cause a flushing wave, the inflated device is rapidly deflated with the assistance of a vacuum pump, thereby releasing the backed up water and resulting in the cleaning of the storm drain segment.

To further reduce impacts of stormwater pollution, a second inflatable device placed well downstream may be used to recollect the water after the force of the flushing wave has dissipated. A pump may then be used to transfer the water and accumulated material to the sanitary sewer for treatment. In some cases, an interceptor structure may be more practical or required to recollect the flushed waters.

It has been found that cleansing efficiency of periodic flush waves is dependent upon flush volume, flush discharge rate, sewer slope, sewer length, sewer flow rate, sewer diameter, and population density. As a rule of thumb, the length of line to be flushed should not exceed 700 feet. At this maximum recommended length, the percent removal efficiency ranges between 65-75% for organics and 55-65% for dry weather grit/inorganic material. The percent removal efficiency drops rapidly beyond that. Water is commonly supplied by a water truck, but fire hydrants can also supply water. To make the best use of water, it is recommended that reclaimed water be used or that fire hydrant line flushing coincide with storm sewer flushing.

References and Resources

California's Nonpoint Source Program Plan http://www.swrcb.ca.gov/nps/index.html

Clark County Storm Water Pollution Control Manual
http://www.co.clark.wa.us/pubworks/bmpman.pdf

Ferguson, B.K. 1991. Urban Stream Reclamation, p. 324-322, Journal of Soil and Water Conservation.

King County Storm Water Pollution Control Manual http://dnr.metrokc.gov/wlr/dss/spcm.htm

Oregon Association of Clean Water Agencies. Oregon Municipal Stormwater Toolbox for Maintenance Practices. June 1998.

Santa Clara Valley Urban Runoff Pollution Prevention Program http://www.scvurppp.org

The Storm Water Managers Resource Center http://www.stormwatercenter.net

United States Environmental Protection Agency (USEPA). 2002. Pollution Prevention/Good Housekeeping for Municipal Operations Storm Drain System Cleaning. On line:
http://www.epa.gov/npdes/menuofbmps/poll_16.htm

Landscape Maintenance SC-73

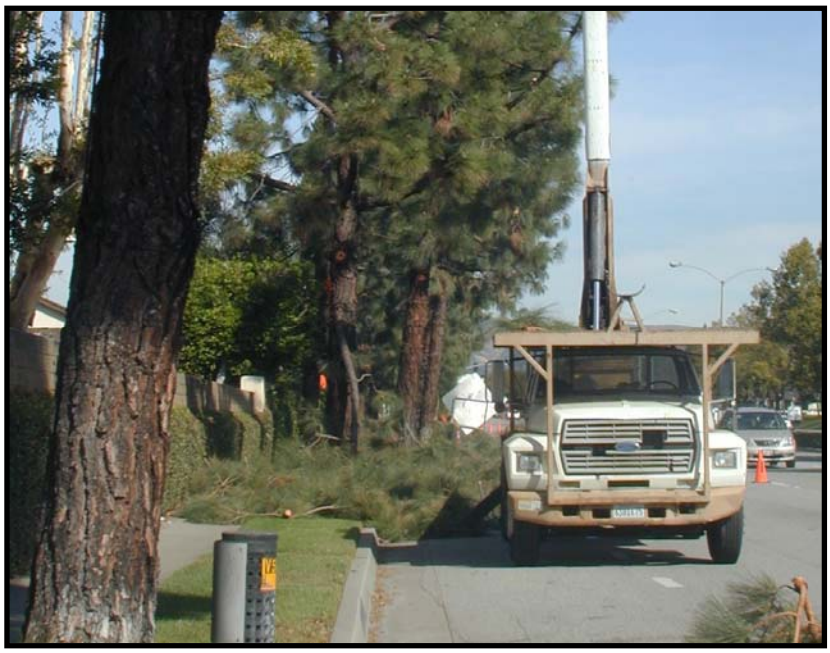

Objectives

- Contain
- Educate
- Reduce/Minimize
- Product Substitution

Targeted Constituents

Sediment	☑
Nutrients	☑
Trash	☑
Metals	
Bacteria	
Oil and Grease	
Organics	
Oxygen Demanding	☑

Description

Landscape maintenance activities include vegetation removal; herbicide and insecticide application; fertilizer application; watering; and other gardening and lawn care practices. Vegetation control typically involves a combination of chemical (herbicide) application and mechanical methods. All of these maintenance practices have the potential to contribute pollutants to the storm drain system. The major objectives of this BMP are to minimize the discharge of pesticides, herbicides and fertilizers to the storm drain system and receiving waters; prevent the disposal of landscape waste into the storm drain system by collecting and properly disposing of clippings and cuttings, and educating employees and the public.

Approach

Pollution Prevention

- Implement an integrated pest management (IPM) program. IPM is a sustainable approach to managing pests by combining biological, cultural, physical, and chemical tools.
- Choose low water using flowers, trees, shrubs, and groundcover.
- Consider alternative landscaping techniques such as naturescaping and xeriscaping.
- Conduct appropriate maintenance (i.e. properly timed fertilizing, weeding, pest control, and pruning) to help preserve the landscapes water efficiency.

CASQA
CALIFORNIA STORMWATER QUALITY ASSOCIATION

- Consider grass cycling (grass cycling is the natural recycling of grass by leaving the clippings on the lawn when mowing. Grass clippings decompose quickly and release valuable nutrients back into the lawn).

Suggested Protocols

Mowing, Trimming, and Weeding

- Whenever possible use mechanical methods of vegetation removal (e.g mowing with tractor-type or push mowers, hand cutting with gas or electric powered weed trimmers) rather than applying herbicides. Use hand weeding where practical.
- Avoid loosening the soil when conducting mechanical or manual weed control, this could lead to erosion. Use mulch or other erosion control measures when soils are exposed.
- Performing mowing at optimal times. Mowing should not be performed if significant rain events are predicted.
- Mulching mowers may be recommended for certain flat areas. Other techniques may be employed to minimize mowing such as selective vegetative planting using low maintenance grasses and shrubs.
- Collect lawn and garden clippings, pruning waste, tree trimmings, and weeds. Chip if necessary, and compost or dispose of at a landfill (see waste management section of this fact sheet).
- Place temporarily stockpiled material away from watercourses, and berm or cover stockpiles to prevent material releases to storm drains.

Planting

- Determine existing native vegetation features (location, species, size, function, importance) and consider the feasibility of protecting them. Consider elements such as their effect on drainage and erosion, hardiness, maintenance requirements, and possible conflicts between preserving vegetation and the resulting maintenance needs.
- Retain and/or plant selected native vegetation whose features are determined to be beneficial, where feasible. Native vegetation usually requires less maintenance (e.g., irrigation, fertilizer) than planting new vegetation.
- Consider using low water use groundcovers when planting or replanting.

Waste Management

- Compost leaves, sticks, or other collected vegetation or dispose of at a permitted landfill. Do not dispose of collected vegetation into waterways or storm drainage systems.
- Place temporarily stockpiled material away from watercourses and storm drain inlets, and berm or cover stockpiles to prevent material releases to the storm drain system.
- Reduce the use of high nitrogen fertilizers that produce excess growth requiring more frequent mowing or trimming.

- Avoid landscape wastes in and around storm drain inlets by either using bagging equipment or by manually picking up the material.

Irrigation

- Where practical, use automatic timers to minimize runoff.
- Use popup sprinkler heads in areas with a lot of activity or where there is a chance the pipes may be broken. Consider the use of mechanisms that reduce water flow to sprinkler heads if broken.
- Ensure that there is no runoff from the landscaped area(s) if re-claimed water is used for irrigation.
- If bailing of muddy water is required (e.g. when repairing a water line leak), do not put it in the storm drain; pour over landscaped areas.
- Irrigate slowly or pulse irrigate to prevent runoff and then only irrigate as much as is needed.
- Apply water at rates that do not exceed the infiltration rate of the soil.

Fertilizer and Pesticide Management

- Utilize a comprehensive management system that incorporates integrated pest management (IPM) techniques. There are many methods and types of IPM, including the following:
  - Mulching can be used to prevent weeds where turf is absent, fencing installed to keep rodents out, and netting used to keep birds and insects away from leaves and fruit.
  - Visible insects can be removed by hand (with gloves or tweezers) and placed in soapy water or vegetable oil. Alternatively, insects can be sprayed off the plant with water or in some cases vacuumed off of larger plants.
  - Store-bought traps, such as species-specific, pheromone-based traps or colored sticky cards, can be used.
  - Slugs can be trapped in small cups filled with beer that are set in the ground so the slugs can get in easily.
  - In cases where microscopic parasites, such as bacteria and fungi, are causing damage to plants, the affected plant material can be removed and disposed of (pruning equipment should be disinfected with bleach to prevent spreading the disease organism).
  - Small mammals and birds can be excluded using fences, netting, tree trunk guards.
  - Beneficial organisms, such as bats, birds, green lacewings, ladybugs, praying mantis, ground beetles, parasitic nematodes, trichogramma wasps, seed head weevils, and spiders that prey on detrimental pest species can be promoted.
- Follow all federal, state, and local laws and regulations governing the use, storage, and disposal of fertilizers and pesticides and training of applicators and pest control advisors.

- Use pesticides only if there is an actual pest problem (not on a regular preventative schedule).
- Do not use pesticides if rain is expected. Apply pesticides only when wind speeds are low (less than 5 mph).
- Do not mix or prepare pesticides for application near storm drains.
- Prepare the minimum amount of pesticide needed for the job and use the lowest rate that will effectively control the pest.
- Employ techniques to minimize off-target application (e.g. spray drift) of pesticides, including consideration of alternative application techniques.
- Fertilizers should be worked into the soil rather than dumped or broadcast onto the surface.
- Calibrate fertilizer and pesticide application equipment to avoid excessive application.
- Periodically test soils for determining proper fertilizer use.
- Sweep pavement and sidewalk if fertilizer is spilled on these surfaces before applying irrigation water.
- Purchase only the amount of pesticide that you can reasonably use in a given time period (month or year depending on the product).
- Triple rinse containers, and use rinse water as product. Dispose of unused pesticide as hazardous waste.
- Dispose of empty pesticide containers according to the instructions on the container label.

Inspection

- Inspect irrigation system periodically to ensure that the right amount of water is being applied and that excessive runoff is not occurring. Minimize excess watering, and repair leaks in the irrigation system as soon as they are observed.
- Inspect pesticide/fertilizer equipment and transportation vehicles daily.

Training

- Educate and train employees on use of pesticides and in pesticide application techniques to prevent pollution. Pesticide application must be under the supervision of a California qualified pesticide applicator.
- Train/encourage municipal maintenance crews to use IPM techniques for managing public green areas.
- Annually train employees within departments responsible for pesticide application on the appropriate portions of the agency's IPM Policy, SOPs, and BMPs, and the latest IPM techniques.

- Employees who are not authorized and trained to apply pesticides should be periodically (at least annually) informed that they cannot use over-the-counter pesticides in or around the workplace.
- Use a training log or similar method to document training.

Spill Response and Prevention

- Refer to SC-11, Spill Prevention, Control & Cleanup
- Have spill cleanup materials readily available and in a know in location
- Cleanup spills immediately and use dry methods if possible.
- Properly dispose of spill cleanup material.

Other Considerations

- The Federal Pesticide, Fungicide, and Rodenticide Act and California Title 3, Division 6, Pesticides and Pest Control Operations place strict controls over pesticide application and handling and specify training, annual refresher, and testing requirements. The regulations generally cover: a list of approved pesticides and selected uses, updated regularly; general application information; equipment use and maintenance procedures; and record keeping. The California Department of Pesticide Regulations and the County Agricultural Commission coordinate and maintain the licensing and certification programs. All public agency employees who apply pesticides and herbicides in "agricultural use" areas such as parks, golf courses, rights-of-way and recreation areas should be properly certified in accordance with state regulations. Contracts for landscape maintenance should include similar requirements.
- All employees who handle pesticides should be familiar with the most recent material safety data sheet (MSDS) files.
- Municipalities do not have the authority to regulate the use of pesticides by school districts, however the California Healthy Schools Act of 2000 (AB 2260) has imposed requirements on California school districts regarding pesticide use in schools. Posting of notification prior to the application of pesticides is now required, and IPM is stated as the preferred approach to pest management in schools.

Requirements

Costs

Additional training of municipal employees will be required to address IPM techniques and BMPs. IPM methods will likely increase labor cost for pest control which may be offset by lower chemical costs.

Maintenance

Not applicable

Supplemental Information

Further Detail of the BMP

Waste Management

Composting is one of the better disposal alternatives if locally available. Most municipalities either have or are planning yard waste composting facilities as a means of reducing the amount of waste going to the landfill. Lawn clippings from municipal maintenance programs as well as private sources would probably be compatible with most composting facilities

Contractors and Other Pesticide Users

Municipal agencies should develop and implement a process to ensure that any contractor employed to conduct pest control and pesticide application on municipal property engages in pest control methods consistent with the IPM Policy adopted by the agency. Specifically, municipalities should require contractors to follow the agency's IPM policy, SOPs, and BMPs; provide evidence to the agency of having received training on current IPM techniques when feasible; provide documentation of pesticide use on agency property to the agency in a timely manner.

References and Resources

King County Stormwater Pollution Control Manual. Best Management Practices for Businesses. 1995. King County Surface Water Management. July. On-line: http://dnr.metrokc.gov/wlr/dss/spcm.htm

Los Angeles County Stormwater Quality Model Programs. Public Agency Activities http://ladpw.org/wmd/npdes/model_links.cfm

Model Urban Runoff Program: A How-To Guide for Developing Urban Runoff Programs for Small Municipalities. Prepared by City of Monterey, City of Santa Cruz, California Coastal Commission, Monterey Bay National Marine Sanctuary, Association of Monterey Bay Area Governments, Woodward-Clyde, Central Coast Regional Water Quality Control Board. July. 1998.

Orange County Stormwater Program http://www.ocwatersheds.com/StormWater/swp_introduction.asp

Santa Clara Valley Urban Runoff Pollution Prevention Program. 1997 Urban Runoff Management Plan. September 1997, updated October 2000.

United States Environmental Protection Agency (USEPA). 2002. Pollution Prevention/Good Housekeeping for Municipal Operations Landscaping and Lawn Care. Office of Water. Office of Wastewater Management. On-line: http://www.epa.gov/npdes/menuofbmps/poll_8.htm

Efficient Irrigation SD-12

Design Objectives

- ☑ Maximize Infiltration
- ☑ Provide Retention
- ☑ Slow Runoff
- Minimize Impervious Land Coverage
- Prohibit Dumping of Improper Materials
- Contain Pollutants
- Collect and Convey

Description

Irrigation water provided to landscaped areas may result in excess irrigation water being conveyed into stormwater drainage systems.

Approach

Project plan designs for development and redevelopment should include application methods of irrigation water that minimize runoff of excess irrigation water into the stormwater conveyance system.

Suitable Applications

Appropriate applications include residential, commercial and industrial areas planned for development or redevelopment. (Detached residential single-family homes are typically excluded from this requirement.)

Design Considerations

Designing New Installations

The following methods to reduce excessive irrigation runoff should be considered, and incorporated and implemented where determined applicable and feasible by the Permittee:

- Employ rain-triggered shutoff devices to prevent irrigation after precipitation.
- Design irrigation systems to each landscape area's specific water requirements.
- Include design featuring flow reducers or shutoff valves triggered by a pressure drop to control water loss in the event of broken sprinkler heads or lines.
- Implement landscape plans consistent with County or City water conservation resolutions, which may include provision of water sensors, programmable irrigation times (for short cycles), etc.

CASQA
CALIFORNIA STORMWATER QUALITY ASSOCIATION

- Design timing and application methods of irrigation water to minimize the runoff of excess irrigation water into the storm water drainage system.
- Group plants with similar water requirements in order to reduce excess irrigation runoff and promote surface filtration. Choose plants with low irrigation requirements (for example, native or drought tolerant species). Consider design features such as:
  - Using mulches (such as wood chips or bar) in planter areas without ground cover to minimize sediment in runoff
  - Installing appropriate plant materials for the location, in accordance with amount of sunlight and climate, and use native plant materials where possible and/or as recommended by the landscape architect
  - Leaving a vegetative barrier along the property boundary and interior watercourses, to act as a pollutant filter, where appropriate and feasible
  - Choosing plants that minimize or eliminate the use of fertilizer or pesticides to sustain growth
- Employ other comparable, equally effective methods to reduce irrigation water runoff.

Redeveloping Existing Installations

Various jurisdictional stormwater management and mitigation plans (SUSMP, WQMP, etc.) define "redevelopment" in terms of amounts of additional impervious area, increases in gross floor area and/or exterior construction, and land disturbing activities with structural or impervious surfaces. The definition of " redevelopment" must be consulted to determine whether or not the requirements for new development apply to areas intended for redevelopment. If the definition applies, the steps outlined under "designing new installations" above should be followed.

Other Resources

A Manual for the Standard Urban Stormwater Mitigation Plan (SUSMP), Los Angeles County Department of Public Works, May 2002.

Model Standard Urban Storm Water Mitigation Plan (SUSMP) for San Diego County, Port of San Diego, and Cities in San Diego County, February 14, 2002.

Model Water Quality Management Plan (WQMP) for County of Orange, Orange County Flood Control District, and the Incorporated Cities of Orange County, Draft February 2003.

Ventura Countywide Technical Guidance Manual for Stormwater Quality Control Measures, July 2002.

Storm Drain Signage SD-13

Design Objectives

- Maximize Infiltration
- Provide Retention
- Slow Runoff
- Minimize Impervious Land Coverage
- ☑ Prohibit Dumping of Improper Materials
- Contain Pollutants
- Collect and Convey

Description

Waste materials dumped into storm drain inlets can have severe impacts on receiving and ground waters. Posting notices regarding discharge prohibitions at storm drain inlets can prevent waste dumping. Storm drain signs and stencils are highly visible source controls that are typically placed directly adjacent to storm drain inlets.

Approach

The stencil or affixed sign contains a brief statement that prohibits dumping of improper materials into the urban runoff conveyance system. Storm drain messages have become a popular method of alerting the public about the effects of and the prohibitions against waste disposal.

Suitable Applications

Stencils and signs alert the public to the destination of pollutants discharged to the storm drain. Signs are appropriate in residential, commercial, and industrial areas, as well as any other area where contributions or dumping to storm drains is likely.

Design Considerations

Storm drain message markers or placards are recommended at all storm drain inlets within the boundary of a development project. The marker should be placed in clear sight facing toward anyone approaching the inlet from either side. All storm drain inlet locations should be identified on the development site map.

Designing New Installations

The following methods should be considered for inclusion in the project design and show on project plans:

- Provide stenciling or labeling of all storm drain inlets and catch basins, constructed or modified, within the project area with prohibitive language. Examples include “NO DUMPING

CASQA
CALIFORNIA STORMWATER QUALITY ASSOCIATION

– DRAINS TO OCEAN" and/or other graphical icons to discourage illegal dumping.

- Post signs with prohibitive language and/or graphical icons, which prohibit illegal dumping at public access points along channels and creeks within the project area.

Note - Some local agencies have approved specific signage and/or storm drain message placards for use. Consult local agency stormwater staff to determine specific requirements for placard types and methods of application.

Redeveloping Existing Installations

Various jurisdictional stormwater management and mitigation plans (SUSMP, WQMP, etc.) define "redevelopment" in terms of amounts of additional impervious area, increases in gross floor area and/or exterior construction, and land disturbing activities with structural or impervious surfaces. If the project meets the definition of "redevelopment", then the requirements stated under " designing new installations" above should be included in all project design plans.

Additional Information

Maintenance Considerations

- Legibility of markers and signs should be maintained. If required by the agency with jurisdiction over the project, the owner/operator or homeowner's association should enter into a maintenance agreement with the agency or record a deed restriction upon the property title to maintain the legibility of placards or signs.

Placement

- Signage on top of curbs tends to weather and fade.

- Signage on face of curbs tends to be worn by contact with vehicle tires and sweeper brooms.

Supplemental Information

Examples

- Most MS4 programs have storm drain signage programs. Some MS4 programs will provide stencils, or arrange for volunteers to stencil storm drains as part of their outreach program.

Other Resources

A Manual for the Standard Urban Stormwater Mitigation Plan (SUSMP), Los Angeles County Department of Public Works, May 2002.

Model Standard Urban Storm Water Mitigation Plan (SUSMP) for San Diego County, Port of San Diego, and Cities in San Diego County, February 14, 2002.

Model Water Quality Management Plan (WQMP) for County of Orange, Orange County Flood Control District, and the Incorporated Cities of Orange County, Draft February 2003.

Ventura Countywide Technical Guidance Manual for Stormwater Quality Control Measures, July 2002.

Maintenance Bays & Docks SD-31

Design Objectives

- Maximize Infiltration
- Provide Retention
- Slow Runoff
- Minimize Impervious Land Coverage
- ☑ Prohibit Dumping of Improper Materials
- ☑ Contain Pollutants
- Collect and Convey

Description

Several measures can be taken to prevent operations at maintenance bays and loading docks from contributing a variety of toxic compounds, oil and grease, heavy metals, nutrients, suspended solids, and other pollutants to the stormwater conveyance system.

Approach

In designs for maintenance bays and loading docks, containment is encouraged. Preventative measures include overflow containment structures and dead-end sumps. However, in the case of loading docks from grocery stores and warehouse/distribution centers, engineered infiltration systems may be considered.

Suitable Applications

Appropriate applications include commercial and industrial areas planned for development or redevelopment.

Design Considerations

Design requirements for vehicle maintenance and repair are governed by Building and Fire Codes, and by current local agency ordinances, and zoning requirements. The design criteria described in this fact sheet are meant to enhance and be consistent with these code requirements.

Designing New Installations

Designs of maintenance bays should consider the following:

- Repair/maintenance bays and vehicle parts with fluids should be indoors; or designed to preclude urban run-on and runoff.
- Repair/maintenance floor areas should be paved with Portland cement concrete (or equivalent smooth impervious surface).

CASQA
CALIFORNIA STORMWATER QUALITY ASSOCIATION

- Repair/maintenance bays should be designed to capture all wash water leaks and spills. Provide impermeable berms, drop inlets, trench catch basins, or overflow containment structures around repair bays to prevent spilled materials and wash-down waters form entering the storm drain system. Connect drains to a sump for collection and disposal. Direct connection of the repair/maintenance bays to the storm drain system is prohibited. If required by local jurisdiction, obtain an Industrial Waste Discharge Permit.

- Other features may be comparable and equally effective.

The following designs of loading/unloading dock areas should be considered:

- Loading dock areas should be covered, or drainage should be designed to preclude urban run-on and runoff.

- Direct connections into storm drains from depressed loading docks (truck wells) are prohibited.

- Below-grade loading docks from grocery stores and warehouse/distribution centers of fresh food items should drain through water quality inlets, or to an engineered infiltration system, or an equally effective alternative. Pre-treatment may also be required.

- Other features may be comparable and equally effective.

Redeveloping Existing Installations

Various jurisdictional stormwater management and mitigation plans (SUSMP, WQMP, etc.) define "redevelopment" in terms of amounts of additional impervious area, increases in gross floor area and/or exterior construction, and land disturbing activities with structural or impervious surfaces. The definition of " redevelopment" must be consulted to determine whether or not the requirements for new development apply to areas intended for redevelopment. If the definition applies, the steps outlined under "designing new installations" above should be followed.

Additional Information

Stormwater and non-stormwater will accumulate in containment areas and sumps with impervious surfaces. Contaminated accumulated water must be disposed of in accordance with applicable laws and cannot be discharged directly to the storm drain or sanitary sewer system without the appropriate permit.

Other Resources

A Manual for the Standard Urban Stormwater Mitigation Plan (SUSMP), Los Angeles County Department of Public Works, May 2002.

Model Standard Urban Storm Water Mitigation Plan (SUSMP) for San Diego County, Port of San Diego, and Cities in San Diego County, February 14, 2002.

Model Water Quality Management Plan (WQMP) for County of Orange, Orange County Flood Control District, and the Incorporated Cities of Orange County, Draft February 2003.

Ventura Countywide Technical Guidance Manual for Stormwater Quality Control Measures, July 2002.

Trash Storage Areas SD-32

Description

Trash storage areas are areas where a trash receptacle (s) are located for use as a repository for solid wastes. Stormwater runoff from areas where trash is stored or disposed of can be polluted. In addition, loose trash and debris can be easily transported by water or wind into nearby storm drain inlets, channels, and/or creeks. Waste handling operations that may be sources of stormwater pollution include dumpsters, litter control, and waste piles.

Approach

This fact sheet contains details on the specific measures required to prevent or reduce pollutants in stormwater runoff associated with trash storage and handling. Preventative measures including enclosures, containment structures, and impervious pavements to mitigate spills, should be used to reduce the likelihood of contamination.

Design Objectives

- Maximize Infiltration
- Provide Retention
- Slow Runoff
- Minimize Impervious Land Coverage
- Prohibit Dumping of Improper Materials
- ☑ Contain Pollutants
- Collect and Convey

Suitable Applications

Appropriate applications include residential, commercial and industrial areas planned for development or redevelopment. (Detached residential single-family homes are typically excluded from this requirement.)

Design Considerations

Design requirements for waste handling areas are governed by Building and Fire Codes, and by current local agency ordinances and zoning requirements. The design criteria described in this fact sheet are meant to enhance and be consistent with these code and ordinance requirements. Hazardous waste should be handled in accordance with legal requirements established in Title 22, California Code of Regulation.

Wastes from commercial and industrial sites are typically hauled by either public or commercial carriers that may have design or access requirements for waste storage areas. The design criteria in this fact sheet are recommendations and are not intended to be in conflict with requirements established by the waste hauler. The waste hauler should be contacted prior to the design of your site trash collection areas. Conflicts or issues should be discussed with the local agency.

Designing New Installations

Trash storage areas should be designed to consider the following structural or treatment control BMPs:

- Design trash container areas so that drainage from adjoining roofs and pavement is diverted around the area(s) to avoid run-on. This might include berming or grading the waste handling area to prevent run-on of stormwater.
- Make sure trash container areas are screened or walled to prevent off-site transport of trash.

CASQA
CALIFORNIA STORMWATER QUALITY ASSOCIATION

- Use lined bins or dumpsters to reduce leaking of liquid waste.
- Provide roofs, awnings, or attached lids on all trash containers to minimize direct precipitation and prevent rainfall from entering containers.
- Pave trash storage areas with an impervious surface to mitigate spills.
- Do not locate storm drains in immediate vicinity of the trash storage area.
- Post signs on all dumpsters informing users that hazardous materials are not to be disposed of therein.

Redeveloping Existing Installations

Various jurisdictional stormwater management and mitigation plans (SUSMP, WQMP, etc.) define "redevelopment" in terms of amounts of additional impervious area, increases in gross floor area and/or exterior construction, and land disturbing activities with structural or impervious surfaces. The definition of " redevelopment" must be consulted to determine whether or not the requirements for new development apply to areas intended for redevelopment. If the definition applies, the steps outlined under "designing new installations" above should be followed.

Additional Information

Maintenance Considerations

The integrity of structural elements that are subject to damage (i.e., screens, covers, and signs) must be maintained by the owner/operator. Maintenance agreements between the local agency and the owner/operator may be required. Some agencies will require maintenance deed restrictions to be recorded of the property title. If required by the local agency, maintenance agreements or deed restrictions must be executed by the owner/operator before improvement plans are approved.

Other Resources

A Manual for the Standard Urban Stormwater Mitigation Plan (SUSMP), Los Angeles County Department of Public Works, May 2002.

Model Standard Urban Storm Water Mitigation Plan (SUSMP) for San Diego County, Port of San Diego, and Cities in San Diego County, February 14, 2002.

Model Water Quality Management Plan (WQMP) for County of Orange, Orange County Flood Control District, and the Incorporated Cities of Orange County, Draft February 2003.

Ventura Countywide Technical Guidance Manual for Stormwater Quality Control Measures, July 2002.

Street Sweeping and Vacuuming SE-7

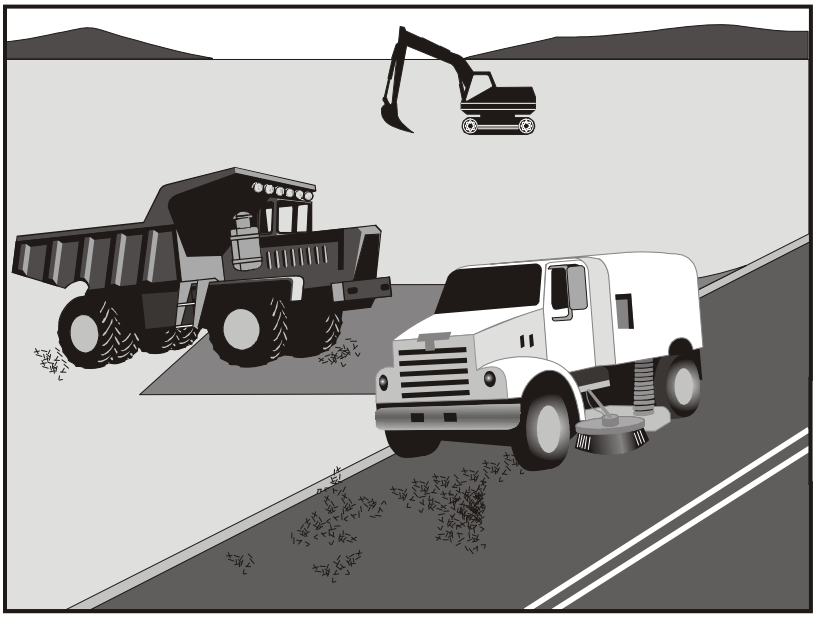

Categories		
EC	Erosion Control	
SE	Sediment Control	☒
TC	Tracking Control	☑
WE	Wind Erosion Control	
NS	Non-Stormwater Management Control	
WM	Waste Management and Materials Pollution Control	

Legend:
☑ **Primary Objective**
☒ **Secondary Objective**

Targeted Constituents	
Sediment	☑
Nutrients	
Trash	☑
Metals	
Bacteria	
Oil and Grease	☑
Organics	

Potential Alternatives

None

Description and Purpose

Street sweeping and vacuuming includes use of self-propelled and walk-behind equipment to remove sediment from streets and roadways, and to clean paved surfaces in preparation for final paving. Sweeping and vacuuming prevents sediment from the project site from entering storm drains or receiving waters.

Suitable Applications

Sweeping and vacuuming are suitable anywhere sediment is tracked from the project site onto public or private paved streets and roads, typically at points of egress. Sweeping and vacuuming are also applicable during preparation of paved surfaces for final paving.

Limitations

Sweeping and vacuuming may not be effective when sediment is wet or when tracked soil is caked (caked soil may need to be scraped loose).

Implementation

- Controlling the number of points where vehicles can leave the site will allow sweeping and vacuuming efforts to be focused, and perhaps save money.
- Inspect potential sediment tracking locations daily.
- Visible sediment tracking should be swept or vacuumed on a daily basis.
- Do not use kick brooms or sweeper attachments. These tend to spread the dirt rather than remove it.

CASQA
CALIFORNIA STORMWATER QUALITY ASSOCIATION

- If not mixed with debris or trash, consider incorporating the removed sediment back into the project

Costs

Rental rates for self-propelled sweepers vary depending on hopper size and duration of rental. Expect rental rates from $58/hour (3 yd^3 hopper) to $88/hour (9 yd^3 hopper), plus operator costs. Hourly production rates vary with the amount of area to be swept and amount of sediment. Match the hopper size to the area and expect sediment load to minimize time spent dumping.

Inspection and Maintenance

- Inspect BMPs prior to forecast rain, daily during extended rain events, after rain events, weekly during the rainy season, and at two-week intervals during the non-rainy season.
- When actively in use, points of ingress and egress must be inspected daily.
- When tracked or spilled sediment is observed outside the construction limits, it must be removed at least daily. More frequent removal, even continuous removal, may be required in some jurisdictions.
- Be careful not to sweep up any unknown substance or any object that may be potentially hazardous.
- Adjust brooms frequently; maximize efficiency of sweeping operations.
- After sweeping is finished, properly dispose of sweeper wastes at an approved dumpsite.

References

Stormwater Quality Handbooks - Construction Site Best Management Practices (BMPs) Manual, State of California Department of Transportation (Caltrans), November 2000.

Labor Surcharge and Equipment Rental Rates, State of California Department of Transportation (Caltrans), April 1, 2002 – March 31, 2003.

Attachment F
Soil/Infiltration Report

April 5, 2019

SOUTHERN CALIFORNIA GEOTECHNICAL
A California Corporation

Panattoni Development Company, Inc.
20411 SW Birch Street, Suite 200
Newport Beach, California 92660

Attention: Mr. Michael Sizemore
Development Manager

Project No.: **19G121-2**

Subject: **Results of Infiltration Testing**
Proposed Commercial/Industrial Development
Baker Avenue, South of 9th Street
Rancho Cucamonga, California

Reference: Geotechnical Investigation, Proposed Commercial/Industrial Development, Baker Avenue, South of 9th Street, Rancho Cucamonga, California, prepared for Panattoni Development Company, Inc. by Southern California Geotechnical, Inc. (SCG), SCG Project No. 19G121-1, dated April 5, 2019.

Dear Mr. Sizemore:

In accordance with your request, we have conducted infiltration testing at the subject site. We are pleased to present this report summarizing the results of the infiltration testing and our design recommendations.

Scope of Services

The scope of services performed for this project was in general accordance with our Proposal No. 18P368R4, dated February 26, 2019. The scope of services included site reconnaissance, subsurface exploration, field testing, and engineering analysis to determine the infiltration rates of the onsite soils. The infiltration testing was performed in general accordance with ASTM Test Method D-3385-03, Standard Test Method for Infiltration Rate of Soils in Field Using Double Ring Infiltrometer.

Site and Project Description

The subject site is located on the east side of Baker Avenue, 300± feet south of 9th Street in Rancho Cucamonga, California. The site is bounded to the north by single-family residences, commercial/industrial buildings, and 9th Street, to the west by Baker Avenue, to the south by a railroad easement, and to the east by Vineyard Avenue and a concrete lined channel. The general location of the site is illustrated on the Site Location Map, enclosed as Plate 1 of this report.

The overall site consists of multiple irregular-shaped parcels, which total 47.03± acres in size. The south-central parcel is developed with a commercial/industrial building, approximately 71,000± ft² in size. The building appears to be a single-story structure of concrete tilt-up construction. The building is surrounded by asphaltic concrete (AC) pavements, which are

generally in poor condition with moderate to severe cracking throughout, and areas of crushed aggregate base (CAB) in the southern area of the parcel.

The southeastern parcel is currently occupied by the Scheu Steel Supply Company and is developed with two (2) buildings. One of the buildings is a two-story industrial building, 40,000± ft² in size, located in the east-central area of the parcel. This building is of metal-frame construction. The second building, 2,700± ft² in size, is located in the southeastern area of the parcel and is a single-story structure of wood-frame and stucco construction. The ground surface cover surrounding the buildings consists CAB, AC pavements, and areas of exposed soil. The ground surface cover in the western portion of the parcel consists of exposed soil with moderate native grass and weed growth. An existing cell tower is located in the south-central area of the parcel. Based on our review of historic aerial photographs, the northeastern area of this parcel was previously developed with two (2) single-family residences. However, based on these photographs, the residences were removed by February 2016.

The northeastern parcel is currently developed with a small commercial/industrial building, 4,000± ft² in size. The building is located in the northern area of the parcel and is surrounded by AC pavements and exposed soils. Numerous stockpiles of green waste including plant foliage, tree trunks, branches, and wood chips are located in the central area of the parcel.

The north-central area of the site is presently developed with a 6,100± ft² two-story building of wood-frame and stucco construction, assumed to be supported on conventional shallow foundations with a concrete slab-on-grade floor. The building is surrounded by concrete pavements and exposed soil. The pavements are generally in fair condition with moderate cracking throughout. Four (4) radio towers are present to the south of the existing building. The ground surface cover surrounding the radio towers and in the remainder of this parcel consists of exposed soil with moderate to dense native grass and weed growth. Based on our review of historic aerial photographs, the northwestern region of this area of the site was previously developed with three (3) single-family residences. Based on the historical photographs, all three of the residences were removed by October 2016. Two (2) concrete slabs measuring 1,700± and 1,800± ft² remain in this area.

The western area of the site is vacant and undeveloped. The ground surface cover in this area consists of exposed soil and moderate to dense native grass and weed growth. An AC road transects this portion of the site, which generally trends east-to-west. A historical building is present in the west-central area, which is to remain and is not a part of the site.

Detailed topographic information was not available at the time of this report. However, based on topographic information obtained from Google Earth, the site topography ranges from 1,165± feet msl in the northwestern area of the site to 1,130± feet mean sea level (msl) in the southeastern area. The site topography slopes gently downward toward the south-southeast at a gradient of approximately 1± percent.

Proposed Development

Based on a conceptual site plan (Scheme 5A) provided to our office by the client, the site will be developed with three (3) new commercial/industrial buildings. The buildings will be identified as

Buildings 1 through 3. Building 1 will be located in the eastern area of the site and will be 639,310± ft² in size. Building 2 will be located in the central area of the site and will be 128,160± ft² in size. Building 3 will be located in the western area of the site and will be 279,390± ft² in size. The buildings will be constructed with dock-high doors located along a portion of at least one wall of each building. The buildings will be surrounded by asphaltic concrete pavements in the parking and drive lanes, Portland cement concrete pavements in the loading dock areas, with concrete flatwork and landscape planters throughout.

We understand that the proposed development will include on-site infiltration to dispose of storm water. Based on the current site layout and conversations with the client, the proposed infiltration systems will consist of three (3) below-grade chamber systems located to the east of proposed Building 3 and to the north and south of Building 1. The bottoms of the chamber systems will extend to depths ranging from 9 to 15± feet below the existing site grades.

Concurrent Study

SCG recently conducted a geotechnical investigation at the subject site, referenced above. As part of this study, eleven (11) borings advanced to depths of 15 to 25± feet below existing site grades. In addition to the eleven borings, four (4) trenches were excavated at the site to depths of 9 to 10± feet below existing site grades. Artificial fill soils were encountered at the ground surface at most of the boring and trench locations, extending to depths of 1½ to 8± feet below the existing site grades. The fill soils generally consist of loose to very dense silty fine sands well graded sands with varying gravel content and some cobbles. Native alluvium was encountered below the fill soils or at the ground surface at all of the boring and trench locations, extending to at least the maximum depth explored of 25± feet below existing site grades. The alluvium generally consists of medium dense to very dense well graded sands with varying gravel and cobble content, and occasional boulders.

Groundwater

Free water was not encountered during the drilling of any of the borings. Based on the lack of any water within the borings, and the moisture contents of the recovered soil samples, the static groundwater is considered to have existed at a depth in excess of 25± feet at the time of the subsurface exploration. As part of our research, we reviewed readily available groundwater data in order to determine regional groundwater depths. The primary reference used to determine the groundwater depths in this area is the California Department of Water Resources website, http://www.water.ca.gov/waterdatalibrary/. One of the nearest monitoring wells is located approximately 1.7 miles northwest from the site. Water level readings within this monitoring well indicates a high groundwater level of 110 feet below the ground surface (November 2013).

Subsurface Exploration

Scope of Exploration

The subsurface exploration for the infiltration testing consisted of six (6) backhoe-excavated trenches, extending to depths of 9 to 13± feet below existing site grades. The trenches were logged during excavation by a member of our staff. The approximate locations of the infiltration

trenches (identified as I-1 through I-6) are indicated on the Infiltration Test Location Plan, enclosed as Plate 2 of this report.

Geotechnical Conditions

CAB was encountered at the ground surface at Infiltration Trench No. I-6, measuring 9 to 10± inches in thickness. Artificial fill soils were encountered below the CAB at I-6, and at the ground surface at all of the remaining infiltration trench locations, extending to depths of 2 to 6½± feet below the existing site grades. The fill soils generally consist of loose to dense silty fine sands with varying amounts of medium to coarse sands, fine to coarse gravel, and cobbles. The fill soils possess a disturbed appearance, varying densities, and trace plastic and wire at Infiltration Trench Nos. I-3 and I-6, resulting in their classification as artificial fill. Infiltration Trench No. I-3 exposed a 1± foot diameter, intact concrete pipe within the fill layer at a depth of 1± foot below the ground surface.

Native alluvium was encountered below the fill soils at all six (6) of the infiltration trench locations. The alluvial soils generally consist of medium dense to very dense silty fine sands, fine to medium sands, gravelly fine to coarse sands, and fine to coarse sandy gravel with varying cobbles, boulders, and silt content, extending to the maximum depth explored of 13± feet. The Trench Logs, which illustrate the conditions encountered at the infiltration test locations, are included with this report.

Infiltration Testing

We understand that the results of the testing will be used to prepare a preliminary design for the storm water infiltration systems that will be used at the subject site. As previously mentioned, the infiltration testing was performed in general accordance with ASTM Test Method D-3385-03, Standard Test Method for Infiltration Rate of Soils in Field Using Double Ring Infiltrometer.

Two stainless steel infiltration rings were used for the infiltration testing. The outer infiltration ring is 2 feet in diameter and 20 inches in height. The inner infiltration ring is 1 foot in diameter and 20 inches in height. At the test locations, the outer ring was driven 3± inches into the soil at the base of each trench. The inner ring was centered inside the outer ring and subsequently driven 3± inches into the soil at the base of the trench. The rings were driven into the soil using a ten-pound sledge hammer. The soil surrounding the wall of the infiltration rings was only slightly disturbed during the driving process.

Infiltration Testing Procedure

Infiltration testing was performed at all six (6) of the trench locations. The infiltration testing consisted of filling the inner ring and the annular space (the space between the inner and outer rings) with water, approximately 3 to 4 inches above the soil. To prevent the flow of water from one ring to the other, the water level in both the inner ring and the annular space between the rings was maintained using constant-head float valves. The volume of water that was added to maintain a constant head in the inner ring and the annular space during each time interval was determined and recorded. A cap was placed over the rings to minimize the evaporation of water during the tests.

The schedule for readings was determined based on the observed soil type at the base of each backhoe-excavated trench. Based on the existing soils at each infiltration test location, the volumetric measurements were made at increments ranging from 1 to 3 minutes. The water volume measurements are presented on the spreadsheets enclosed with this report. The infiltration rates for each of the timed intervals are also tabulated on these spreadsheets.

The infiltration rates for the infiltration tests are calculated in centimeters per hour and then converted to inches per hour. The rates are summarized below:

Infiltration Test No.	Depth (feet)	Soil Description	Infiltration Rate (inches/hour)
I-1	12	Fine to coarse Sandy Gravel, extensive Cobbles, occasional Boulders	9.7
I-2	9	Fine to coarse Sandy Gravel, extensive Cobbles, occasional Boulders	7.6
I-3	13	Fine to coarse Sandy Gravel, extensive Cobbles	15.4
I-4	12	Fine to coarse Sandy Gravel, extensive Cobbles, occasional Boulders	13.0
I-5	9	Gravelly fine to coarse Sand, extensive Cobbles, little Silt	5.7
I-6	9½	Gravelly fine to coarse Sand, occasional to extensive Cobbles	20.2

Laboratory Testing

Moisture Content

The moisture contents for selected soil samples within the trenches were determined in accordance with ASTM D-2216 and are expressed as a percentage of the dry weight. These test results are presented on the Trench Logs.

Grain Size Analysis

The grain size distribution of selected soils collected from the base of each infiltration test trench has been determined using a range of wire mesh screens. These tests were performed in general accordance with ASTM D-422 and/or ASTM D-1140. The weight of the portion of the sample retained on each screen is recorded and the percentage finer or coarser of the total weight is calculated. The results of the grainsize analysis are presented on Plates C-1 through C-6 of this report.

Design Recommendations

Six (6) infiltration tests were performed at the subject site. As noted above, the calculated infiltration rates at the infiltration test locations range from 5.7 to 20.2 inches per hour. The primary factors affecting the infiltration rates are the varying relative densities and the silt content of the encountered soils, which vary at different depths and locations at the subject site.

Based on the results of Infiltration Test Nos. I-1 and I-2, we recommend an infiltration rate of 7.6 inches per hour be used for the proposed below-grade chamber system located to the east of Building 3. Based on the results of Infiltration Test Nos. I-3 and I-4, we recommend an infiltration rate of 13.0 inches per hour be used for the proposed below-grade chamber system located to the north of Building 1. Based on the results of Infiltration Test Nos. I-5 and I-6, we recommend an infiltration rate of 5.7 inches per hour be used for the proposed chamber system located to the south of Building 1.

We recommend that a representative from the geotechnical engineer be on-site during the construction of the proposed infiltration systems to identify the soil classification at the base of each chamber system. It should be confirmed that the soils at the base of the proposed infiltration systems correspond with those presented in this report to ensure that the performance of the systems will be consistent with the rates reported herein.

The design of the proposed storm water infiltration systems should be performed by the project civil engineer, in accordance with the City of Rancho Cucamonga and/or County of San Bernardino guidelines. However, it is recommended that the system be constructed so as to facilitate removal of silt and clay, or other deleterious materials from any water that may enter the systems. The presence of such materials would decrease the effective infiltration rates. **It is recommended that the project civil engineer apply an appropriate factor of safety. The infiltration rates recommended above are based on the assumption that only clean water will be introduced to the subsurface profile. Any fines, debris, or organic materials could significantly impact the infiltration rates.** It should be noted that the recommended infiltration rates are based on infiltration testing at six (6) discrete locations and the overall infiltration rates of the storm water infiltration systems could vary considerably.

Construction Considerations

The infiltration rates presented in this report are specific to the tested locations and tested depths. Infiltration rates can be significantly reduced if the soils are exposed to excessive disturbance or compaction during construction. Therefore, the subgrade soils within proposed infiltration system areas should not be overexcavated, undercut or compacted in any significant manner. **It is recommended that a note to this effect be added to the project plans and/or specifications.**

Infiltration versus Permeability

Infiltration rates are based on unsaturated flow. As water is introduced into soils by infiltration, the soils become saturated and the wetting front advances from the unsaturated zone to the saturated zone. Once the soils become saturated, infiltration rates become zero, and water can only move through soils by hydraulic conductivity at a rate determined by pressure head and soil

permeability. The infiltration rates presented herein were determined in accordance with the ASTM Test Method D-3385-03 standard and are considered valid for the time and place of the actual test. Changes in soil moisture content will affect these infiltration rates. Infiltration rates should be expected to decrease until the soils become saturated. Soil permeability values will then govern groundwater movement. Permeability values may be on the order of 10 to 20 times less than infiltration rates. The system designer should incorporate adequate factors of safety and allow for overflow design into appropriate traditional storm drain systems, which would transport storm water off-site.

Location of Infiltration Systems

The use of on-site storm water infiltration systems carries a risk of creating adverse geotechnical conditions. Increasing the moisture content of the soil can cause the soil to lose internal shear strength and increase its compressibility, resulting in a change in the designed engineering properties. Overlying structures and pavements in the infiltration areas could potentially be damaged due to saturation of subgrade soils. **The proposed infiltration systems for this site should be located at least 25 feet away from any structures, including retaining walls.** Even with this provision of locating the infiltration systems at least 25 feet from the building, it is possible that infiltrating water into the subsurface soils could have an adverse effect on the proposed or existing structures. It should also be noted that utility trenches which happen to collect storm water can also serve as conduits to transmit storm water toward the structure, depending on the slope of the utility trench. Therefore, consideration should also be given to the proposed locations of underground utilities which may pass near the proposed infiltration systems.

General Comments

This report has been prepared as an instrument of service for use by the client in order to aid in the evaluation of this property and to assist the architects and engineers in the design and preparation of the project plans and specifications. This report may be provided to the contractor(s) and other design consultants to disclose information relative to the project. However, this report is not intended to be utilized as a specification in and of itself, without appropriate interpretation by the project architect, structural engineer, and/or civil engineer. The design of the infiltration system is the responsibility of the civil engineer. The role of the geotechnical engineer is limited to determination of infiltration rate only. By using the design infiltration rates contained herein, the civil engineer agrees to indemnify, defend, and hold harmless the geotechnical engineer for all aspects of the design and performance of the infiltration system. The reproduction and distribution of this report must be authorized by the client and Southern California Geotechnical, Inc. Furthermore, any reliance on this report by an unauthorized third party is at such party's sole risk, and we accept no responsibility for damage or loss which may occur. The analysis of this site was based on a subsurface profile interpolated from limited discrete soil samples. While the materials encountered in the project area are considered to be representative of the total area, some variations should be expected between trench locations and testing depths. If the conditions encountered during construction vary significantly from those detailed herein, we should be contacted immediately to determine if the conditions alter the recommendations contained herein.

This report has been based on assumed or provided characteristics of the proposed development. It is recommended that the owner, client, architect, structural engineer, and civil engineer

carefully review these assumptions to ensure that they are consistent with the characteristics of the proposed development. If discrepancies exist, they should be brought to our attention to verify that they do not affect the conclusions and recommendations contained herein. We also recommend that the project plans and specifications be submitted to our office for review to verify that our recommendations have been correctly interpreted. The analysis, conclusions, and recommendations contained within this report have been promulgated in accordance with generally accepted professional geotechnical engineering practice. No other warranty is implied or expressed.

Closure

We sincerely appreciate the opportunity to be of service on this project. We look forward to providing additional consulting services during the course of the project. If we may be of further assistance in any manner, please contact our office.

Respectfully Submitted,

SOUTHERN CALIFORNIA GEOTECHNICAL, INC.

Scott McCann
Staff Scientist

Daniel W. Nielsen, RCE 77915
Senior Engineer

Distribution: (1) Addressee

Enclosures: Plate 1 - Site Location Map
Plate 2 - Infiltration Test Location Plan
Trench Logs (6 pages)
Infiltration Test Results Spreadsheets (6 pages)
Grain Size Distribution Graphs (6 pages)

SOURCE: SAN BENARDINO COUNTY
THOMAS GUIDE, 2013

SITE LOCATION MAP

PROPOSED COMMERCIAL/INDUSTRIAL DEVELOPMENT

RANCHO CUCAMONGA, CALIFORNIA

SCALE: 1" = 2400'	
DRAWN: OS CHKD: RGT	
SCG PROJECT 19G121-2	
PLATE 1	

SoCalGeo

SOUTHERN CALIFORNIA GEOTECHNICAL

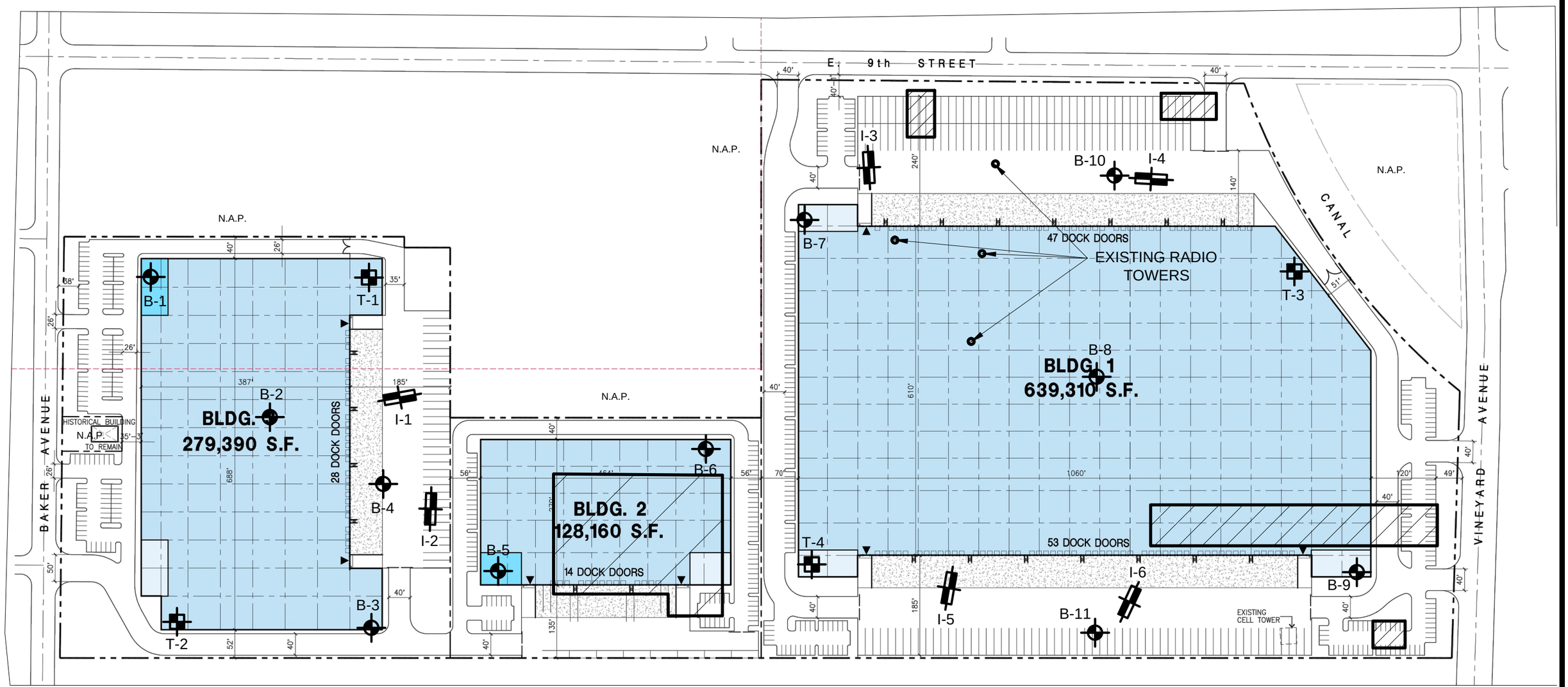

GEOTECHNICAL LEGEND

- APPROXIMATE INFILTRATION TEST LOCATION
- APPROXIMATE BORING LOCATION FROM CONCURRENT STUDY (SCG PROJECT NO. 19G121-1)
- APPROXIMATE TRENCH LOCATION FROM CONCURRENT STUDY (SCG PROJECT NO. 19G121-1)
- EXISTING BUILDINGS TO BE DEMOLISHED

NORTH

NOTE: CONCEPTUAL SITE PLAN PREPARED BY HPA ARCHITECTURE.

INFILTRATION TEST LOCATION PLAN

PROPOSED COMMERCIAL/INDUSTRIAL DEVELOPMENT

RANCHO CUCAMONGA, CALIFORNIA

SCALE: 1" = 180'	SOUTHERN CALIFORNIA GEOTECHNICAL
DRAWN: AL CHKD: RGT	
SCG PROJECT 19G121-2	
PLATE 2	

SOUTHERN CALIFORNIA GEOTECHNICAL

TRENCH NO. I-1

JOB NO.: 19G121-2
PROJECT: Proposed Commercial/Industrial Development
LOCATION: Rancho Cucamonga, CA
DATE: 3-7-2019

EQUIPMENT USED: Backhoe
LOGGED BY: Scott McCann
ORIENTATION: N 80 E
ELEVATION:

WATER DEPTH: Dry
SEEPAGE DEPTH: Dry
READINGS TAKEN: At Completion

DEPTH	SAMPLE	DRY DENSITY (PCF)	MOISTURE (%)	EARTH MATERIALS DESCRIPTION
	b		4	A: FILL: Brown Silty fine to coarse Sand, little fine to coarse Gravel, occasional to extensive Cobbles, trace fine root fibers, medium dense to dense - damp @ 0 to 1 foot, abundant fine root fibers
				B: ALLUVIUM: Gray Brown Gravelly fine to coarse Sand, extensive Cobbles, occasional Boulders, trace Silt, dense to very dense - dry to damp
5				
	b		5	C: ALLUVIUM: Light Brown fine to medium Sand, little coarse Sand, little fine to coarse Gravel, occasional Cobbles, medium dense - damp D: ALLUVIUM: Gray Brown Gravelly fine to coarse Sand, extensive Cobbles, trace Silt, dense to very dense - damp
10				E: ALLUVIUM: Light Gray Brown fine to coarse Sandy Gravel, extensive Cobbles, occasional Boulders, very dense - damp
	b		4	
				Trench Terminated @ 12 feet
15				

GRAPHIC REPRESENTATION

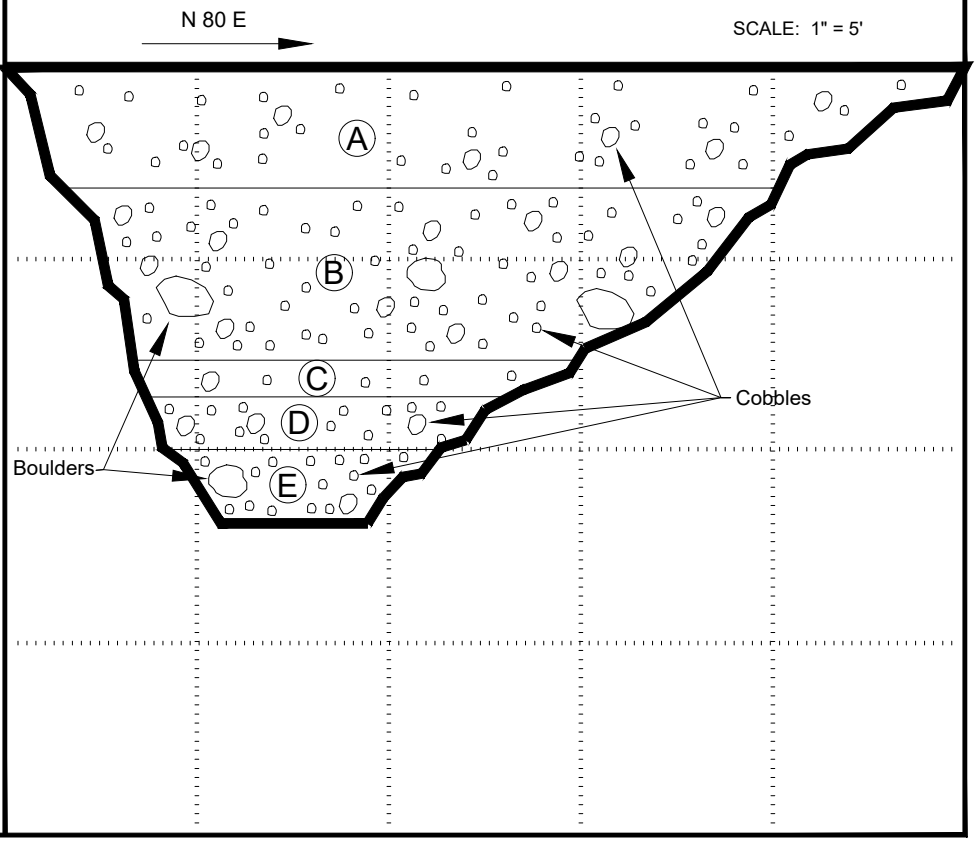

KEY TO SAMPLE TYPES:
B - BULK SAMPLE (DISTURBED)
R - RING SAMPLE 2-1/2" DIAMETER (RELATIVELY UNDISTURBED)

TRENCH LOG

PLATE B-1

SOUTHERN CALIFORNIA GEOTECHNICAL

TRENCH NO. I-2

JOB NO.: 19G121-2
PROJECT: Proposed Commercial/Industrial Development
LOCATION: Rancho Cucamonga, CA
DATE: 3-7-2019

EQUIPMENT USED: Backhoe
LOGGED BY: Scott McCann
ORIENTATION: N 2 E
ELEVATION:

WATER DEPTH: Dry
SEEPAGE DEPTH: Dry
READINGS TAKEN: At Completion

DEPTH	SAMPLE	DRY DENSITY (PCF)	MOISTURE (%)	EARTH MATERIALS DESCRIPTION
	b		13	A: FILL: Dark Brown Silty fine Sand, little medium to coarse Sand, trace to little fine to coarse Gravel, occasional Cobbles, some fine root fibers, loose to medium dense - moist
				B: ALLUVIUM: Light Gray Gravelly fine to coarse Sand, extensive Cobbles, occasional Boulders, dense to very dense - damp
5	b		13	C: ALLUVIUM: Brown fine to medium Sand, little coarse Sand, little fine Gravel, trace coarse Gravel, occasional Cobbles, little Silt, medium dense to dense - moist
	b		2	D: ALLUVIUM: Light Gray Brown fine to coarse Sandy Gravel, extensive Cobbles, occasional Boulders, very dense - dry to damp
10				Trench Terminated @ 9 feet
15				

GRAPHIC REPRESENTATION

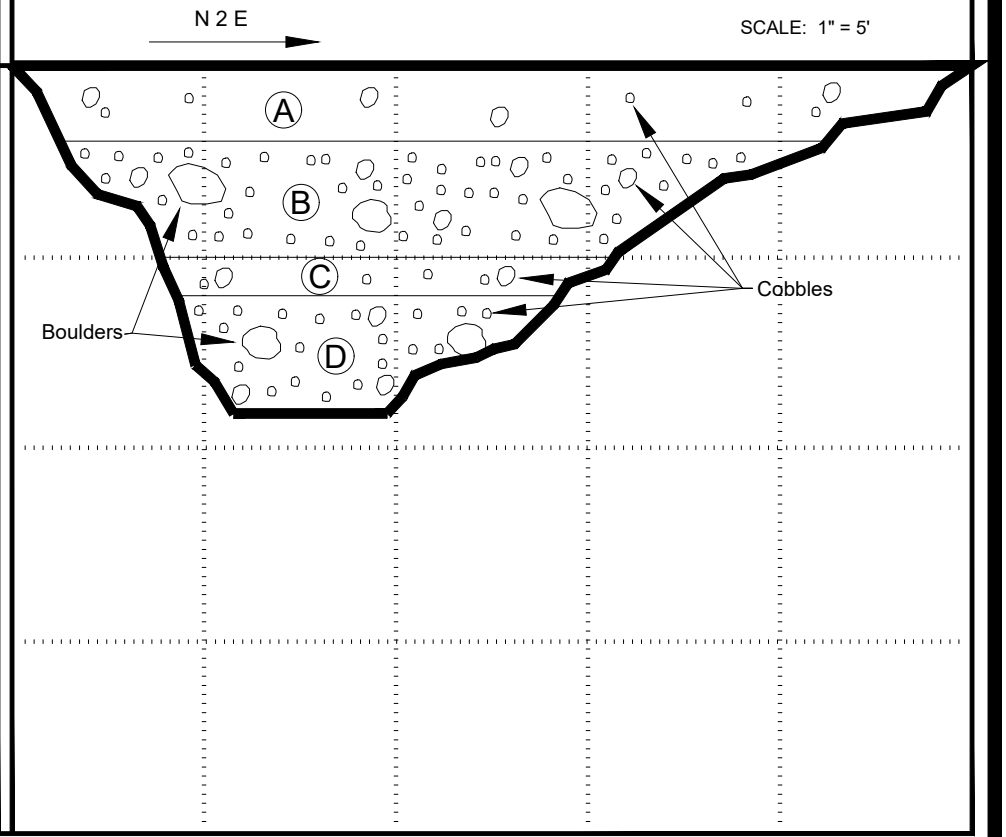

KEY TO SAMPLE TYPES:
B - BULK SAMPLE (DISTURBED)
R - RING SAMPLE 2-1/2" DIAMETER (RELATIVELY UNDISTURBED)

TRENCH LOG

PLATE B-2

SOUTHERN CALIFORNIA GEOTECHNICAL

TRENCH NO. I-3

JOB NO.: 19G121-2
PROJECT: Proposed Commercial/Industrial Development
LOCATION: Rancho Cucamonga, CA
DATE: 3-8-2019

EQUIPMENT USED: Backhoe
LOGGED BY: Scott McCann
ORIENTATION: N 3 W
ELEVATION:

WATER DEPTH: Dry
SEEPAGE DEPTH: Dry
READINGS TAKEN: At Completion

DEPTH	SAMPLE	DRY DENSITY (PCF)	MOISTURE (%)	EARTH MATERIALS DESCRIPTION
5	b		7	A: FILL: Gray Brown Silty fine to medium Sand, little coarse Sand, little to some fine to coarse Gravel, occasional to extensive Cobbles, 1' diameter intact Concrete Pipe, trace Wire, trace fine root fibers, medium dense to dense - damp B: ALLUVIUM: Light Gray Gravelly fine to coarse Sand, extensive Cobbles, occasional Boulders, dense to very dense - damp to moist
10	b		14	C: ALLUVIUM: Brown Silty fine Sand, little medium to coarse Sand, trace to little fine to coarse Gravel, occasional Cobbles, medium dense to dense - moist D: ALLUVIUM: Light Gray Brown fine to coarse Sandy Gravel, extensive Cobbles, dense - damp
15	b		4	Trench Terminated @ 13 feet

GRAPHIC REPRESENTATION

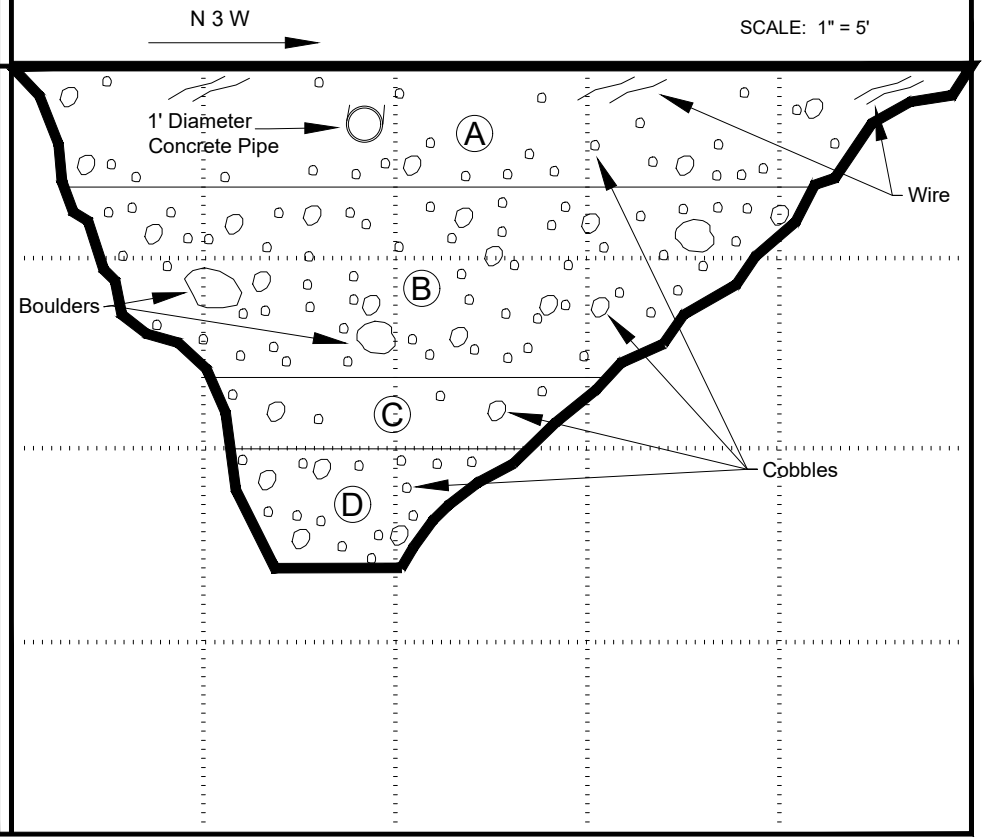

KEY TO SAMPLE TYPES:
B - BULK SAMPLE (DISTURBED)
R - RING SAMPLE 2-1/2" DIAMETER (RELATIVELY UNDISTURBED)

TRENCH LOG

PLATE B-3

SOUTHERN CALIFORNIA GEOTECHNICAL

TRENCH NO. I-4

JOB NO.: 19G121-2
PROJECT: Proposed Commercial/Industrial Development
LOCATION: Rancho Cucamonga, CA
DATE: 3-8-2019

EQUIPMENT USED: Backhoe
LOGGED BY: Scott McCann
ORIENTATION: S 87 E
ELEVATION:

WATER DEPTH: Dry
SEEPAGE DEPTH: Dry
READINGS TAKEN: At Completion

DEPTH	SAMPLE	DRY DENSITY (PCF)	MOISTURE (%)	EARTH MATERIALS DESCRIPTION
	b		13	A: FILL: Brown Silty fine Sand, little medium to coarse Sand, little fine to coarse Gravel, occasional Cobbles, some fine root fibers, medium dense - moist
				B: ALLUVIUM: Light Gray Gravelly fine to coarse Sand, extensive Cobbles, occasional Boulders, dense to very dense - dry to damp
5	b		6	C: ALLUVIUM: Light Gray fine to coarse Sand, little fine Gravel, trace coarse Gravel, medium dense - damp
				D: ALLUVIUM: Light Gray Brown fine to coarse Sandy Gravel, extensive Cobbles, occasional Boulders, dense to very dense - damp
10	b		3	
				Trench Terminated @ 12 feet
15				

GRAPHIC REPRESENTATION

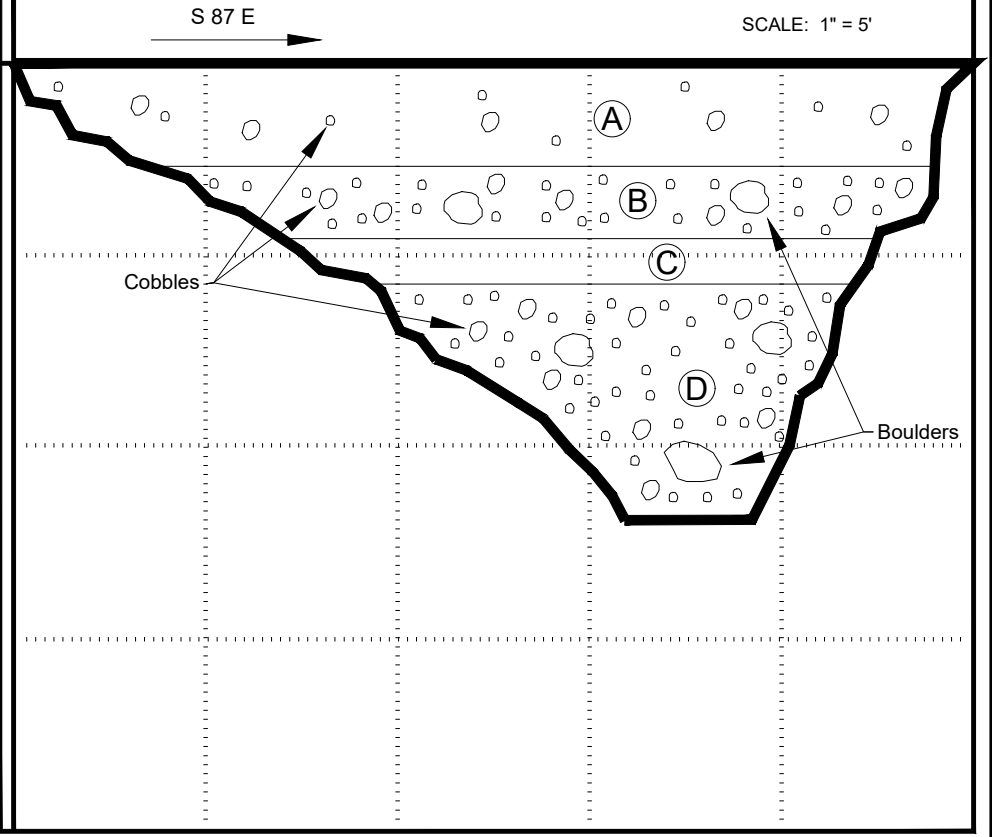

KEY TO SAMPLE TYPES:
B - BULK SAMPLE (DISTURBED)
R - RING SAMPLE 2-1/2" DIAMETER (RELATIVELY UNDISTURBED)

TRENCH LOG

PLATE B-4

SOUTHERN CALIFORNIA GEOTECHNICAL

TRENCH NO. I-5

JOB NO.: 19G121-2
PROJECT: Proposed Commercial/Industrial Development
LOCATION: Rancho Cucamonga, CA
DATE: 311-2019

EQUIPMENT USED: Backhoe
LOGGED BY: Scott McCann
ORIENTATION: S 10 W
ELEVATION:

WATER DEPTH: Dry
SEEPAGE DEPTH: Dry
READINGS TAKEN: At Completion

DEPTH	SAMPLE	DRY DENSITY (PCF)	MOISTURE (%)	EARTH MATERIALS DESCRIPTION
	b		9	A: FILL: Brown Silty fine to medium Sand, little coarse Sand, trace fine Gravel, some fine root fibers, loose - damp to moist
				B: ALLUVIUM: Light Gray fine to coarse Sand, little fine to coarse Gravel, occasional Cobbles, loose to medium dense - damp
				C: ALLUVIUM: Brown Silty fine Sand, little medium to coarse Sand, little fine Gravel, medium dense - moist
5				D: ALLUVIUM: Light Gray Gravelly fine to coarse Sand, occasional to extensive Cobbles, dense - dry to damp
	b		9	E: ALLUVIUM: Gray Brown Gravelly fine to coarse Sand, extensive Cobbles, little Silt, dense to very dense - moist
10				Trench Terminated @ 9 feet
15				

GRAPHIC REPRESENTATION

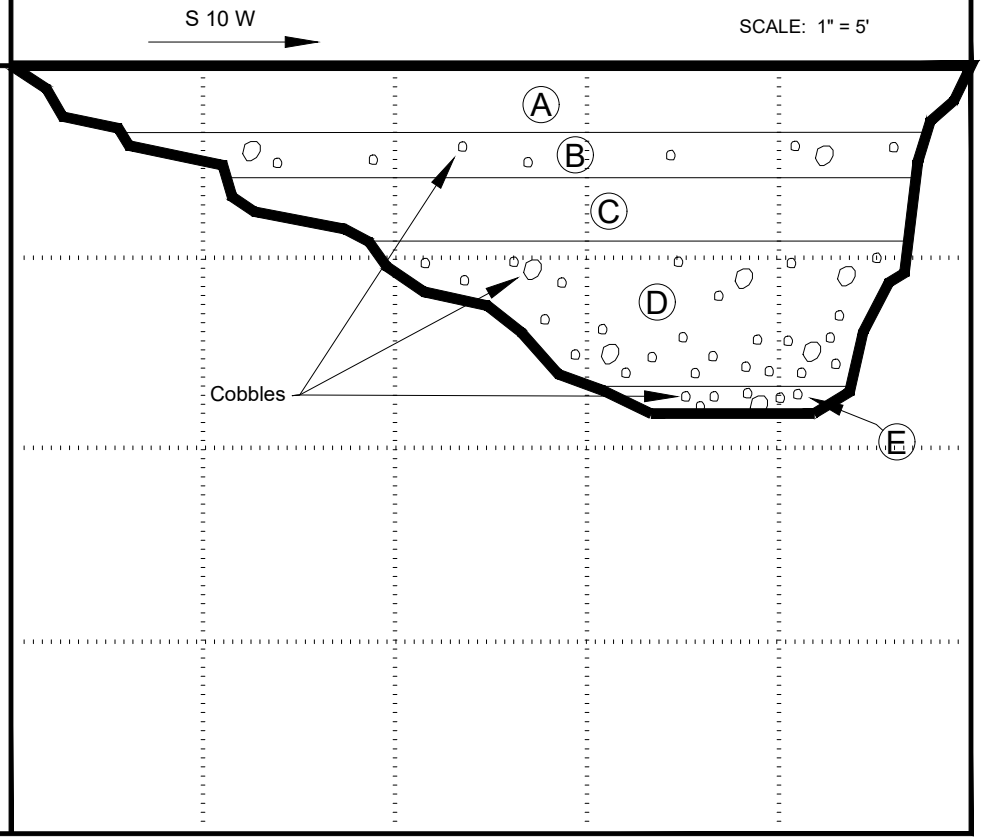

KEY TO SAMPLE TYPES:
B - BULK SAMPLE (DISTURBED)
R - RING SAMPLE 2-1/2" DIAMETER (RELATIVELY UNDISTURBED)

TRENCH LOG

PLATE B-5

SOUTHERN CALIFORNIA GEOTECHNICAL

TRENCH NO. I-6

JOB NO.: 19G121-2
PROJECT: Proposed Commercial/Industrial Development
LOCATION: Rancho Cucamonga, CA
DATE: 3-11-2019

EQUIPMENT USED: Backhoe
LOGGED BY: Scott McCann
ORIENTATION: S 25 W
ELEVATION:

WATER DEPTH: Dry
SEEPAGE DEPTH: Dry
READINGS TAKEN: At Completion

DEPTH	SAMPLE	DRY DENSITY (PCF)	MOISTURE (%)	EARTH MATERIALS DESCRIPTION
				A: CRUSHED AGGREGATE BASE (CAB): 9 to 10 inches thick
	b		11	B: FILL: Gray Brown Silty fine to medium Sand, little coarse Sand, trace to little fine to coarse Gravel, trace Plastic, loose to medium dense - moist
5				
				C: ALLUVIUM: Light Gray Gravelly fine to coarse Sand, occasional to extensive Cobbles, dense - dry to damp
	b		3	
10				Trench Terminated @ 9.5 feet
15				

GRAPHIC REPRESENTATION

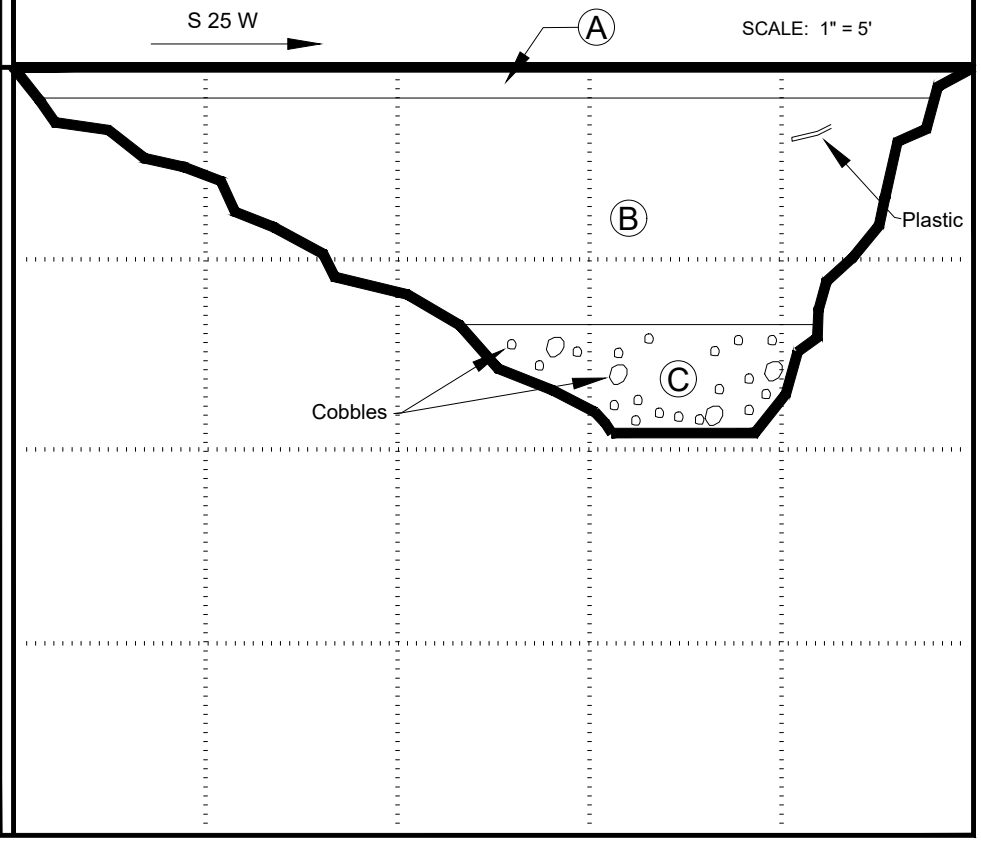

KEY TO SAMPLE TYPES:
B - BULK SAMPLE (DISTURBED)
R - RING SAMPLE 2-1/2" DIAMETER (RELATIVELY UNDISTURBED)

TRENCH LOG

PLATE B-6

INFILTRATION CALCULATIONS

Project Name	Proposed Commercial/Industrial Development
Project Location	Rancho Cucamonga, CA
Project Number	19G121-2
Engineer	Scott McCann

Infiltration Test No: I-1

Constants

	Diameter (ft)	Area (ft^2)	Area (cm^2)
Inner	1	0.79	730
Anlr. Spac	2	2.36	2189

*Note: The infiltration rate was calculated based on current time interval

Test Interval		Time (hr)	Interval **Elapsed** (min)	Flow Readings: Inner Ring (ml)	Flow Readings: Ring Flow (cm^3)	Flow Readings: Annular Ring (ml)	Flow Readings: Space Flow (cm^3)	Infiltration Rates: Inner Ring* (cm/hr)	Infiltration Rates: Annular Space* (cm/hr)	Infiltration Rates: Inner Ring* (in/hr)	Infiltration Rates: Annular Space* (in/hr)
1	Initial	12:30 PM	3	150	950	700	4700	26.04	42.94	10.25	16.91
	Final	12:33 PM	**3**	1100		5400					
2	Initial	12:34 PM	3	100	950	900	4650	26.04	42.49	10.25	16.73
	Final	12:37 PM	**7**	1050		5550					
3	Initial	12:38 PM	3	100	950	700	4500	26.04	41.12	10.25	16.19
	Final	12:41 PM	**11**	1050		5200					
4	Initial	12:42 PM	3	150	950	700	4600	26.04	42.03	10.25	16.55
	Final	12:45 PM	**15**	1100		5300					
5	Initial	12:46 PM	3	200	925	700	4600	25.36	42.03	9.98	16.55
	Final	12:49 PM	**19**	1125		5300					
6	Initial	12:50 PM	3	100	925	500	4500	25.36	41.12	9.98	16.19
	Final	12:53 PM	**23**	1025		5000					
7	Initial	12:54 PM	3	200	925	200	4500	25.36	41.12	9.98	16.19
	Final	12:57 PM	**27**	1125		4700					
8	Initial	12:58 PM	3	50	900	300	4500	24.67	41.12	9.71	16.19
	Final	1:01 PM	**31**	950		4800					

INFILTRATION CALCULATIONS

Project Name	Proposed Commercial/Industrial Development
Project Location	Rancho Cucamonga, CA
Project Number	19G121-2
Engineer	Scott McCann

Infiltration Test No: I-2

Constants

	Diameter (ft)	Area (ft^2)	Area (cm^2)
Inner	1	0.79	730
Anlr. Spac	2	2.36	2189

*Note: The infiltration rate was calculated based on current time interval

Test Interval		Time (hr)	Interval **Elapsed** (min)	Flow Readings: Inner Ring (ml)	Flow Readings: Ring Flow (cm^3)	Flow Readings: Annular Ring (ml)	Flow Readings: Space Flow (cm^3)	Infiltration Rates: Inner Ring* (cm/hr)	Infiltration Rates: Annular Space* (cm/hr)	Infiltration Rates: Inner Ring* (in/hr)	Infiltration Rates: Annular Space* (in/hr)
1	Initial	10:00 AM	3	0	800	300	4900	21.93	44.77	8.63	17.63
	Final	10:03 AM	**3**	800		5200					
2	Initial	10:04 AM	3	300	750	400	4200	20.56	38.38	8.09	15.11
	Final	10:07 AM	**7**	1050		4600					
3	Initial	10:10 AM	3	150	775	800	3950	21.24	36.09	8.36	14.21
	Final	10:13 AM	**13**	925		4750					
4	Initial	10:14 AM	3	100	750	600	3750	20.56	34.26	8.09	13.49
	Final	10:17 AM	**17**	850		4350					
5	Initial	10:18 AM	3	900	725	4600	3800	19.87	34.72	7.82	13.67
	Final	10:21 AM	**21**	1625		8400					
6	Initial	10:22 AM	3	100	725	500	3750	19.87	34.26	7.82	13.49
	Final	10:25 AM	**25**	825		4250					
7	Initial	10:26 AM	3	850	700	4300	3700	19.19	33.81	7.55	13.31
	Final	10:29 AM	**29**	1550		8000					
8	Initial	10:30 AM	3	200	700	600	3700	19.19	33.81	7.55	13.31
	Final	10:33 AM	**33**	900		4300					

INFILTRATION CALCULATIONS

Project Name	Proposed Commercial/Industrial Development
Project Location	Rancho Cucamonga, CA
Project Number	19G121-2
Engineer	Scott McCann

Infiltration Test No: I-3

Constants

	Diameter (ft)	Area (ft^2)	Area (cm^2)
Inner	1	0.79	730
Anlr. Spac	2	2.36	2189

*Note: The infiltration rate was calculated based on current time interval

Test Interval		Time (hr)	Interval **Elapsed** (min)	Flow Readings: Inner Ring (ml)	Ring Flow (cm^3)	Annular Ring (ml)	Space Flow (cm^3)	Infiltration Rates: Inner Ring* (cm/hr)	Annular Space* (cm/hr)	Inner Ring* (in/hr)	Annular Space* (in/hr)
1	Initial	9:40 AM	1	200	625	500	2600	51.40	71.27	20.23	28.06
	Final	9:41 AM	**1**	825		3100					
2	Initial	9:42 AM	1	150	600	900	2550	49.34	69.90	19.43	27.52
	Final	9:43 AM	**3**	750		3450					
3	Initial	9:44 AM	1	100	550	600	2500	45.23	68.53	17.81	26.98
	Final	9:45 AM	**5**	650		3100					
4	Initial	9:46 AM	1	150	550	500	2450	45.23	67.16	17.81	26.44
	Final	9:47 AM	**7**	700		2950					
5	Initial	9:48 AM	1	1250	550	3950	2400	45.23	65.79	17.81	25.90
	Final	9:49 AM	**9**	1800		6350					
6	Initial	9:50 AM	1	150	500	600	2400	41.12	65.79	16.19	25.90
	Final	9:51 AM	**11**	650		3000					
7	Initial	9:52 AM	1	200	475	600	2350	39.06	64.42	15.38	25.36
	Final	9:53 AM	**13**	675		2950					
8	Initial	9:54 AM	1	200	475	600	2400	39.06	65.79	15.38	25.90
	Final	9:55 AM	**15**	675		3000					
9	Initial	9:56 AM	1	1200	475	3800	2350	39.06	64.42	15.38	25.36
	Final	9:57 AM	**17**	1675		6150					
10	Initial	9:58 AM	1	2250	475	7100	2300	39.06	63.05	15.38	24.82
	Final	9:59 AM	**19**	2725		9400					

INFILTRATION CALCULATIONS

Project Name	Proposed Commercial/Industrial Development
Project Location	Rancho Cucamonga, CA
Project Number	19G121-2
Engineer	Scott McCann

Infiltration Test No I-4

Constants

	Diameter (ft)	Area (ft^2)	Area (cm^2)
Inner	1	0.79	730
Anlr. Spac	2	2.36	2189

*Note: The infiltration rate was calculated based on current time interval

Test Interval		Time (hr)	Interval **Elapsed** (min)	Flow Readings: Inner Ring (ml)	Flow Readings: Ring Flow (cm^3)	Flow Readings: Annular Ring (ml)	Flow Readings: Space Flow (cm^3)	Infiltration Rates: Inner Ring* (cm/hr)	Infiltration Rates: Annular Space* (cm/hr)	Infiltration Rates: Inner Ring* (in/hr)	Infiltration Rates: Annular Space* (in/hr)
1	Initial	11:45 AM	1	200	725	900	2450	59.62	67.16	23.47	26.44
	Final	11:46 AM	**1**	925		3350					
2	Initial	11:47 AM	1	300	550	1300	2300	45.23	63.05	17.81	24.82
	Final	11:48 AM	**3**	850		3600					
3	Initial	11:49 AM	1	50	450	400	2250	37.00	61.67	14.57	24.28
	Final	11:50 AM	**5**	500		2650					
4	Initial	11:51 AM	1	200	475	550	2300	39.06	63.05	15.38	24.82
	Final	11:52 AM	**7**	675		2850					
5	Initial	11:53 AM	1	200	425	200	2200	34.95	60.30	13.76	23.74
	Final	11:54 AM	**9**	625		2400					
6	Initial	11:55 AM	1	150	450	500	2200	37.00	60.30	14.57	23.74
	Final	11:56 AM	**11**	600		2700					
7	Initial	11:57 AM	1	150	400	350	2200	32.89	60.30	12.95	23.74
	Final	11:58 AM	**13**	550		2550					
8	Initial	11:59 AM	1	50	400	300	2150	32.89	58.93	12.95	23.20
	Final	12:00 PM	**15**	450		2450					

INFILTRATION CALCULATIONS

Project Name	Proposed Commercial/Industrial Development
Project Location	Rancho Cucamonga, CA
Project Number	19G121-2
Engineer	Scott McCann

Infiltration Test No: I-5

Constants

	Diameter (ft)	Area (ft^2)	Area (cm^2)
Inner	1	0.79	730
Anlr. Spac	2	2.36	2189

*Note: The infiltration rate was calculated based on current time interval

Test Interval		Time (hr)	Interval **Elapsed** (min)	Flow Readings: Inner Ring (ml)	Flow Readings: Ring Flow (cm^3)	Flow Readings: Annular Ring (ml)	Flow Readings: Space Flow (cm^3)	Infiltration Rates: Inner Ring* (cm/hr)	Infiltration Rates: Annular Space* (cm/hr)	Infiltration Rates: Inner Ring* (in/hr)	Infiltration Rates: Annular Space* (in/hr)
1	Initial	8:50 AM	3	700	725	900	4600	19.87	42.03	7.82	16.55
	Final	8:53 AM	**3**	1425		5500					
2	Initial	8:54 AM	3	150	600	900	3500	16.45	31.98	6.48	12.59
	Final	8:57 AM	**7**	750		4400					
3	Initial	8:58 AM	3	50	600	800	3100	16.45	28.32	6.48	11.15
	Final	9:01 AM	**11**	650		3900					
4	Initial	9:02 AM	3	50	550	500	2900	15.08	26.50	5.94	10.43
	Final	9:05 AM	**15**	600		3400					
5	Initial	9:06 AM	3	50	550	400	3300	15.08	30.15	5.94	11.87
	Final	9:09 AM	**19**	600		3700					
6	Initial	9:10 AM	3	50	525	500	2900	14.39	26.50	5.67	10.43
	Final	9:13 AM	**23**	575		3400					
7	Initial	9:14 AM	3	200	525	1700	2800	14.39	25.58	5.67	10.07
	Final	9:17 AM	**27**	725		4500					

INFILTRATION CALCULATIONS

Project Name	Proposed Commercial/Industrial Development
Project Location	Rancho Cucamonga, CA
Project Number	19G121-2
Engineer	Scott McCann

Infiltration Test No: I-6

Constants

	Diameter (ft)	Area (ft^2)	Area (cm^2)
Inner	1	0.79	730
Anlr. Spac	2	2.36	2189

*Note: The infiltration rate was calculated based on current time interval

Test Interval		Time (hr)	Interval **Elapsed** (min)	Flow Readings: Inner Ring (ml)	Flow Readings: Ring Flow (cm^3)	Flow Readings: Annular Ring (ml)	Flow Readings: Space Flow (cm^3)	Infiltration Rates: Inner Ring* (cm/hr)	Infiltration Rates: Annular Space* (cm/hr)	Infiltration Rates: Inner Ring* (in/hr)	Infiltration Rates: Annular Space* (in/hr)
1	Initial	10:40 AM	1	700	725	1800	3100	59.62	84.97	23.47	33.45
	Final	10:41 AM	**1**	1425		4900					
2	Initial	10:42 AM	1	250	650	1500	2800	53.45	76.75	21.04	30.22
	Final	10:43 AM	**3**	900		4300					
3	Initial	10:44 AM	1	350	625	1200	2800	51.40	76.75	20.23	30.22
	Final	10:45 AM	**5**	975		4000					
4	Initial	10:46 AM	1	250	650	1400	3000	53.45	82.23	21.04	32.38
	Final	10:47 AM	**7**	900		4400					
5	Initial	10:48 AM	1	300	650	1800	2800	53.45	76.75	21.04	30.22
	Final	10:49 AM	**9**	950		4600					
6	Initial	10:50 AM	1	350	650	1600	2900	53.45	79.49	21.04	31.30
	Final	10:51 AM	**11**	1000		4500					
7	Initial	10:52 AM	1	500	625	2300	2700	51.40	74.01	20.23	29.14
	Final	10:53 AM	**13**	1125		5000					

Grain Size Distribution

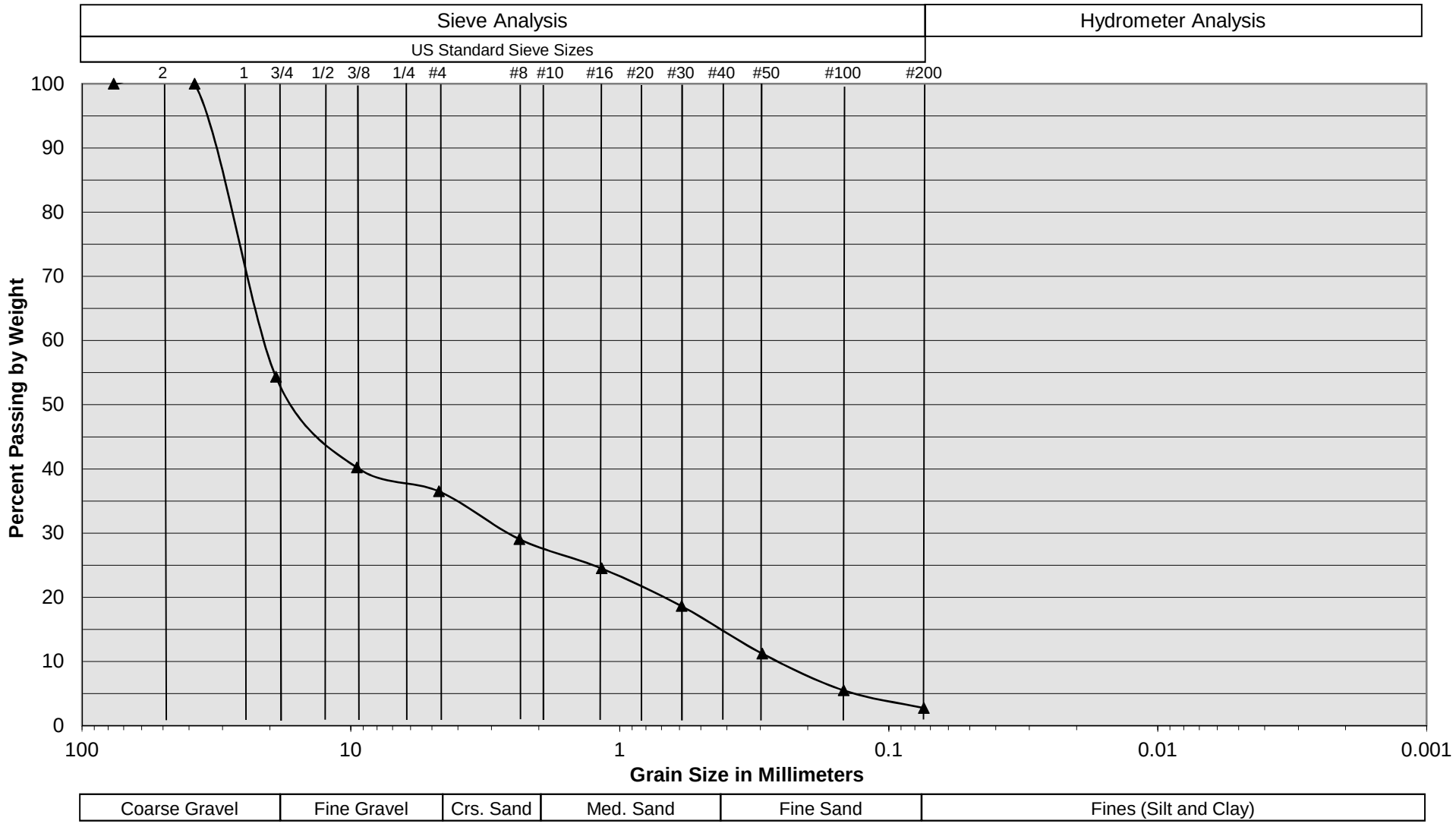

Sample Description	I-1 @ 12 feet
Soil Classification	Light Gray Brown fine to coarse Sandy Gravel

Proposed Commercial/Industrial Development
Rancho Cucamonga, CA
Project No. 19G121-2
PLATE C-1

SoCalGeo
SOUTHERN CALIFORNIA GEOTECHNICAL
A California Corporation

Grain Size Distribution

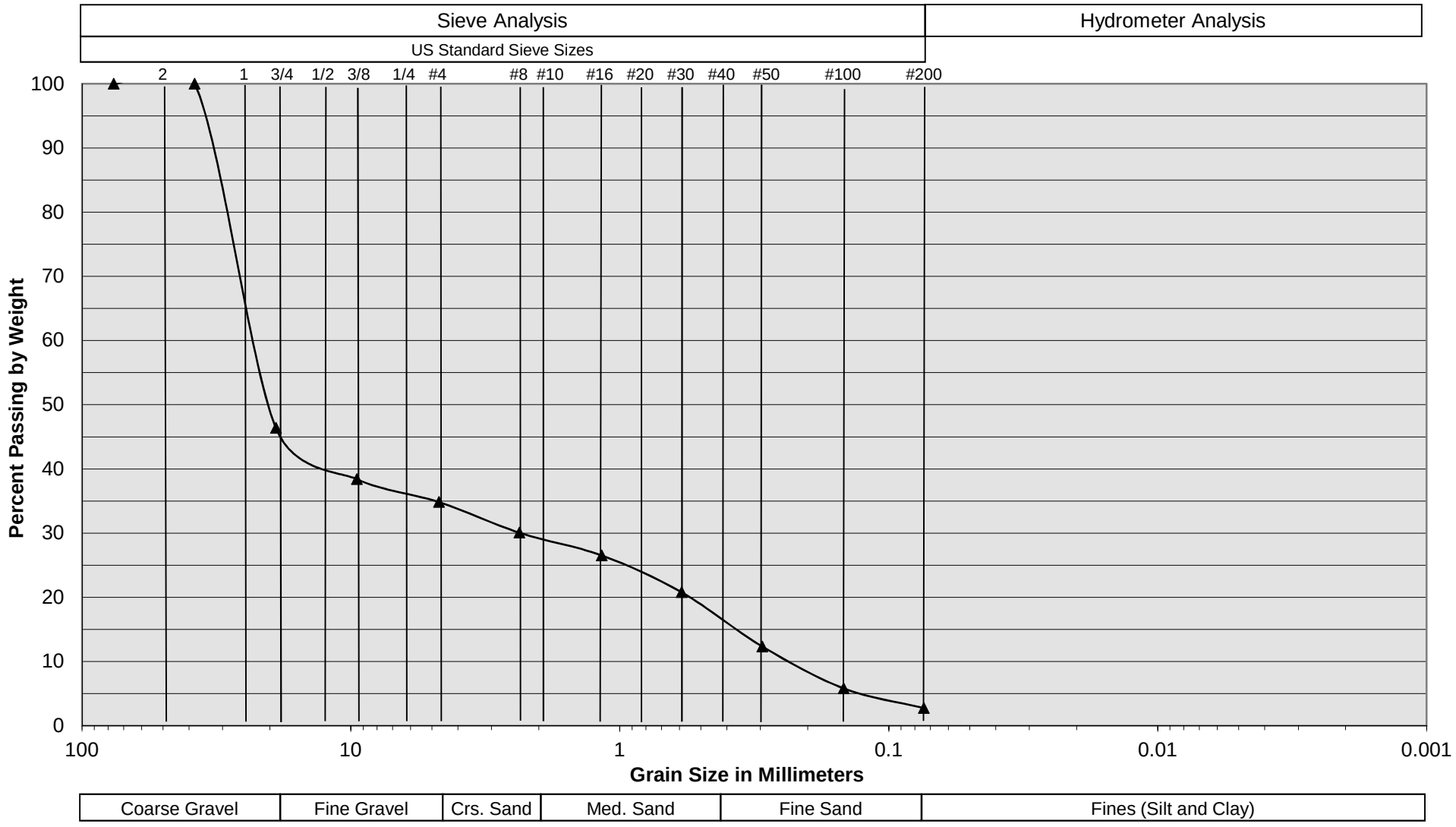

Sample Description	I-2 @ 9 feet
Soil Classification	Light Gray Brown fine to coarse Sandy Gravel

Proposed Commercial/Industrial Development
Rancho Cucamonga, CA
Project No. 19G121-2
PLATE C-2

SoCalGeo
SOUTHERN CALIFORNIA GEOTECHNICAL
A California Corporation

Grain Size Distribution

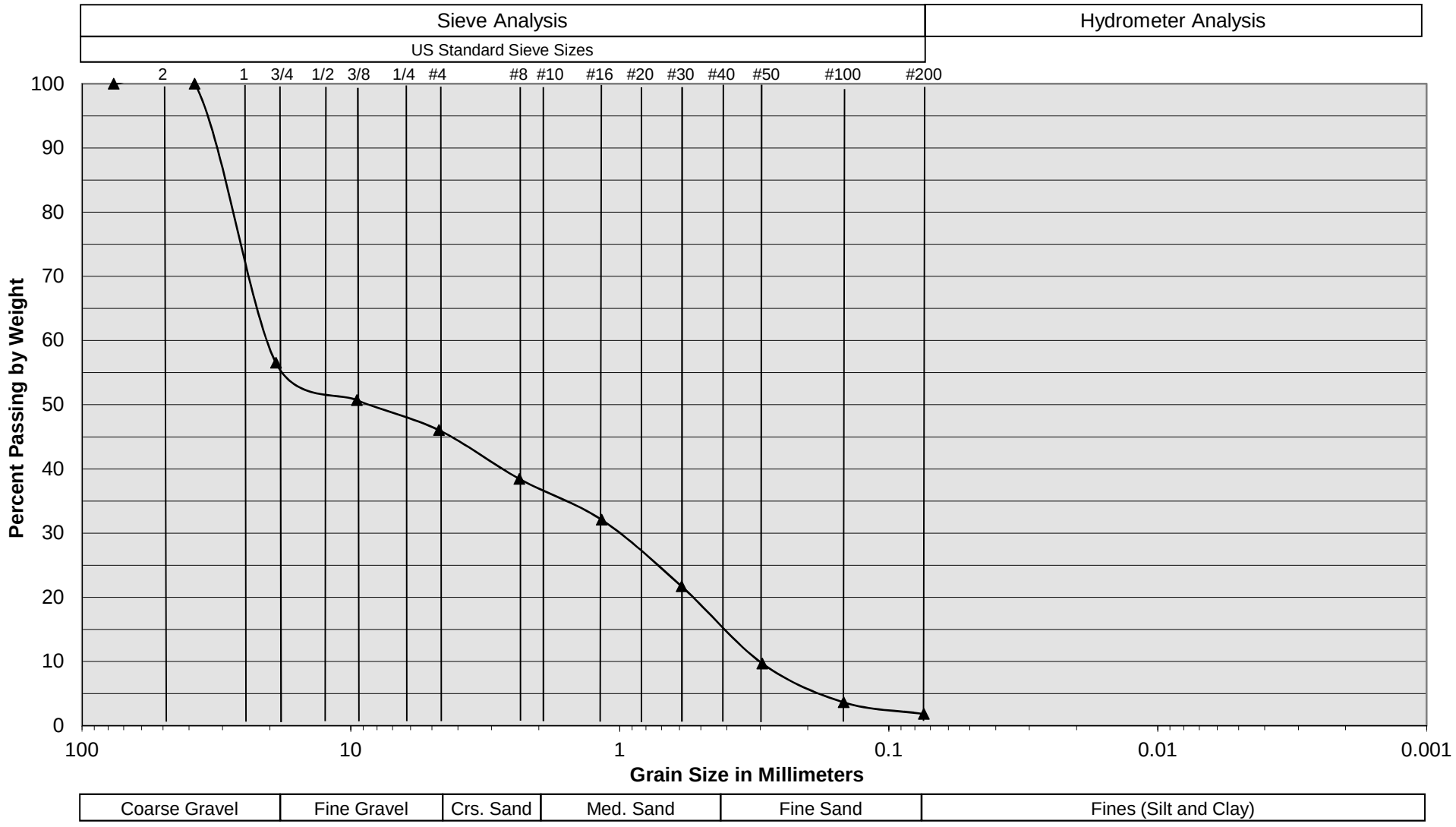

Sample Description	I-3 @ 13 feet
Soil Classification	Light Gray Brown fine to coarse Sandy Gravel

Proposed Commercial/Industrial Development
Rancho Cucamonga, CA
Project No. 19G121-2
PLATE C-3

SoCalGeo
SOUTHERN CALIFORNIA GEOTECHNICAL
A California Corporation

Grain Size Distribution

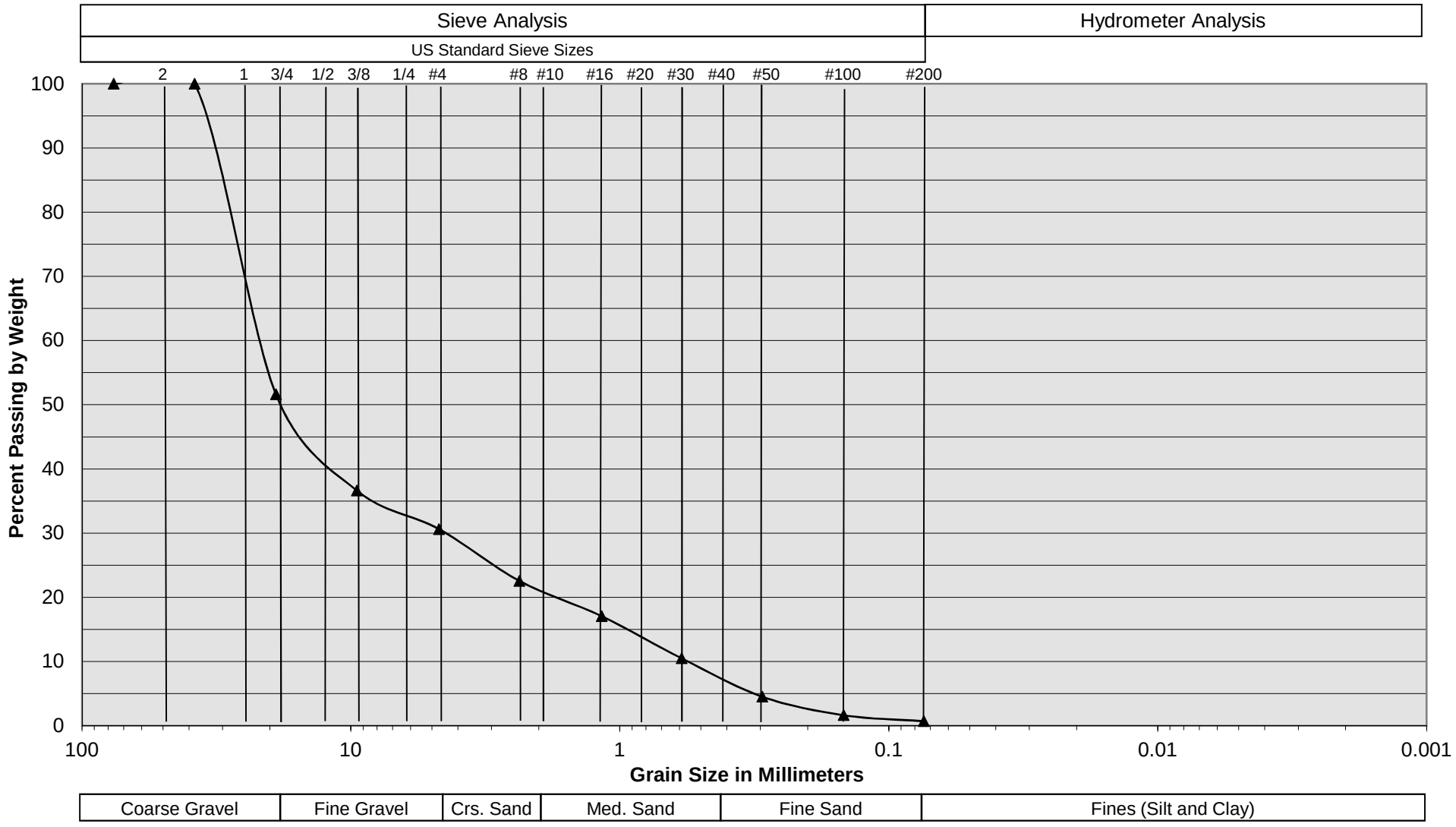

Sample Description	I-4 @ 12 feet
Soil Classification	Light Gray Brown fine to coarse Sandy Gravel

Proposed Commercial/Industrial Development
Rancho Cucamonga, CA
Project No. 19G121-2
PLATE C-4

SoCalGeo
SOUTHERN CALIFORNIA GEOTECHNICAL
A California Corporation

Grain Size Distribution

Sample Description	I-5 @ 9 feet
Soil Classification	Gray Brown Gravelly fine to coarse Sand, little Silt

Proposed Commercial/Industrial Development
Rancho Cucamonga, CA
Project No. 19G121-2
PLATE C-5

SoCalGeo
SOUTHERN CALIFORNIA GEOTECHNICAL
A California Corporation

Grain Size Distribution

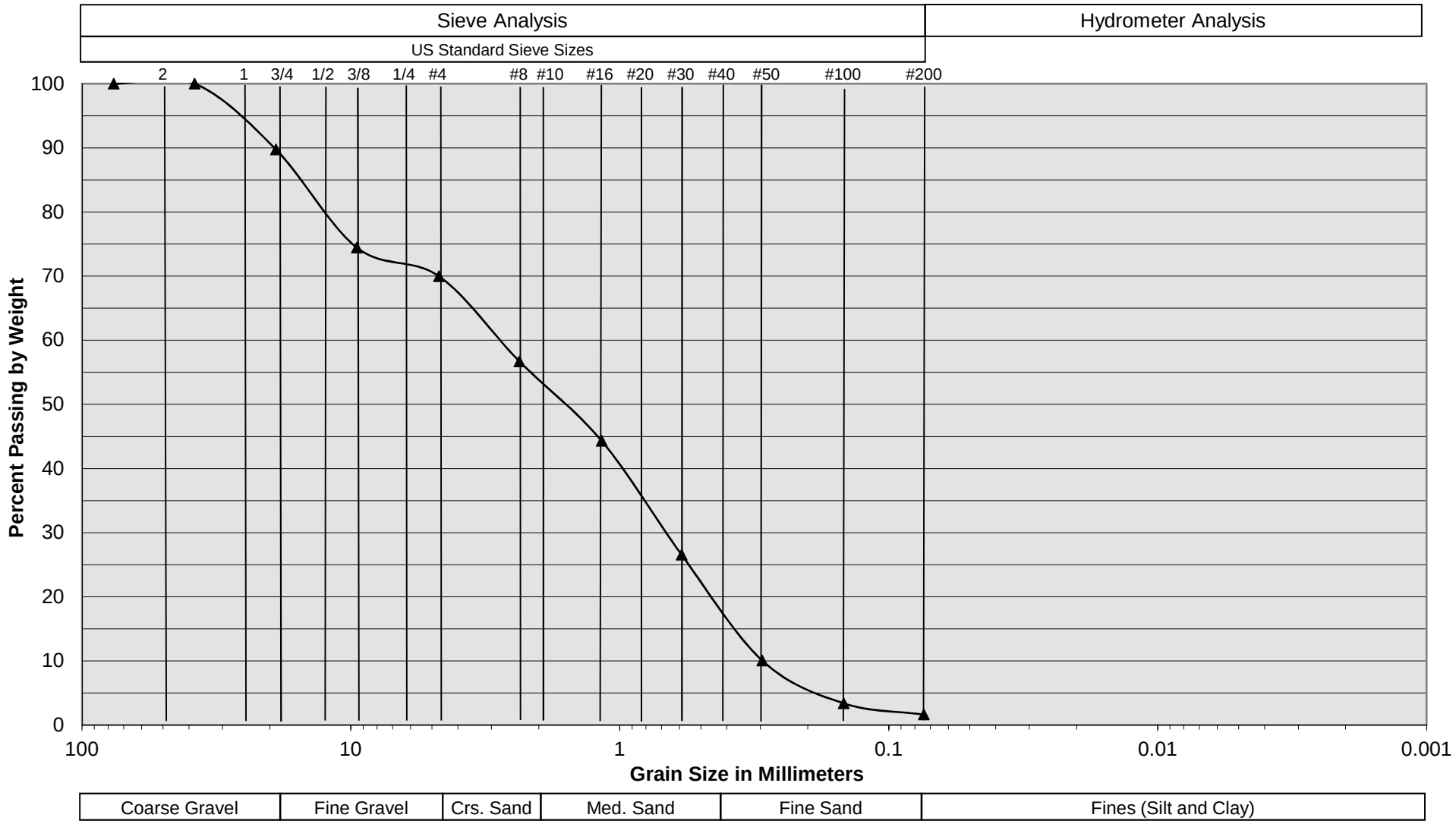

Sample Description	I-6 @ 9½ feet
Soil Classification	Light Gray Gravelly fine to coarse Sand

Proposed Commercial/Industrial Development
Rancho Cucamonga, CA
Project No. 19G121-2
PLATE C-6

SoCalGeo
SOUTHERN CALIFORNIA GEOTECHNICAL
A California Corporation

Attachment G
BMP Maintenance Material

Panattoni Development Company, Inc.
20411 SW Birch Street, Suite 200
Newport Beach, CA 92660

October 1, 2019

Mr. Matthew Addington
Associate Engineer
City of Rancho Cucamonga
10500 Civic Center Drive
Rancho Cucamonga, CA 91730
matthew.addington@cityofrc.us

Subject: **PWQMP for Panattoni 9th Street and Vineyard**
Letter of Intent to Enter into a Contract to Maintain Structural Stormwater Treatment Devices and Filters.

Dear Mr. Addington,

This letter shall serve to substantiate an intent to enter into a contract for the maintenance of the structural stormwater treatment devices and filters prior to issuance of a certificate of occupancy.

If you have any questions, you may contact myself at (949) 296-2989 or MSizemore@panattoni.com.

Respectfully,
Panattoni Development Company, Inc.

Jacob R. Leblanc
Local Partner

Maintenance and Inspection Proposal

Date **October 9, 2019** Project Name **Panattoni 9th Street and Vineyard**

Project Address **E 9th St & Vineyard Ave** **Rancho Cucamonga, CA** **92009**
(city) (Zip Code)

Contact **Luis Prado** Phone (**714**) **521** – **4811** Email luisp@thieneseng.com

Contract Term **Budgetary Quote**

Following, please find details of Bio Clean's Maintenance Program and a Proposal to service the Stormwater Systems located at the above referenced project. Bio Clean's recommended cleaning is quarterly for filter inserts (or 2x/yr optional), or per local agency or city requirements. Hydrodynamic separators and LID units should be cleaned one time per year and inspected six months after the cleaning to ensure proper functioning, or per local agency or city requirements. The Maintenance Program incorporates a tracking number used to identify each unit and preserve its history.

Quantity	Description of Service	Size	Cost Per Unit	Services Per Year	Total
48	**Grate Filter Insert Cleaning**	BC-GRATE-MLS 25-38-24	$69.00	2	$6,624.00
3	**Curb Filter Insert Cleaning**	BC-CURB-MLS	$89.00	2	$534.00
4	**MC-4500 StormTech Inspection**	Various	$325.00	2	$2,600.00
Annual Maintenance Cost					**$9,758.00**

Notes: HDPE Detention System pricing is for inspection only. Quote for HDPE Detention System maintenance to be obtained seperately, confined space inspection necessary to determine level of pollutant loading.

Program Details

Filter Insert Details:
- Visual inspection of catch basin and filter insert for illicit discharge or structural deterioration. Filter insert condition will be noted.
- Clean filter insert. Remove trash, foliage and sediment. Power wash and inspect filter for minor damages.
- Evaluate Hydrocarbon Booms. Booms will be changed out a minimum of one time per year, if needed, unless noted. Replacement will be noted.
- Transport and dispose collected pollutants, liquids and hydrocarbon booms to approved facility in accordance with local and state requirements.
- A written report identifying collected pollutants, weights, and boom/media condition will be submitted to customer, city or municipality after each service.

Hydrodynamic Separator/ LID Unit Details:
- Visual inspection of system for illicit discharge or structural deterioration.
- Clean system according to manufacture's specifications; using a vactor truck or as specified.
- Record pollutants (sediment, trash, foliage) along with approximate weights or yards, and amount of water collected.
- Evaluate condition of the system media (cartridge system, mulch, etc.) per manufacture's specification.
- Transport and dispose collected pollutants and liquids to approved facility in accordance with local and state requirements.
- A written report identifying collected pollutants, weights/yards, and media condition will be submitted to customer, city or municipality after each service.

Confined Space Details:
Bio Clean's maintenance technicians are trained and certified in Air Monitoring and Confined Space Entry. In the event that entry is required, Confined Space Entry will be conducted in accordance with CAL OSHA and FED OSHA requirements. Our technicians are certified in Traffic Control and HAZWOPER.

Invoice will be billed after each service. Terms are Net 30 Days. Prices quoted are for a yearly contract, or longer, as specified above. Proposal pricing is good for 90 days from above date. See Service Agreement for additional Service Details, Payment & Terms.

Regards,

Paul Krajewski
Maintenance Services Director

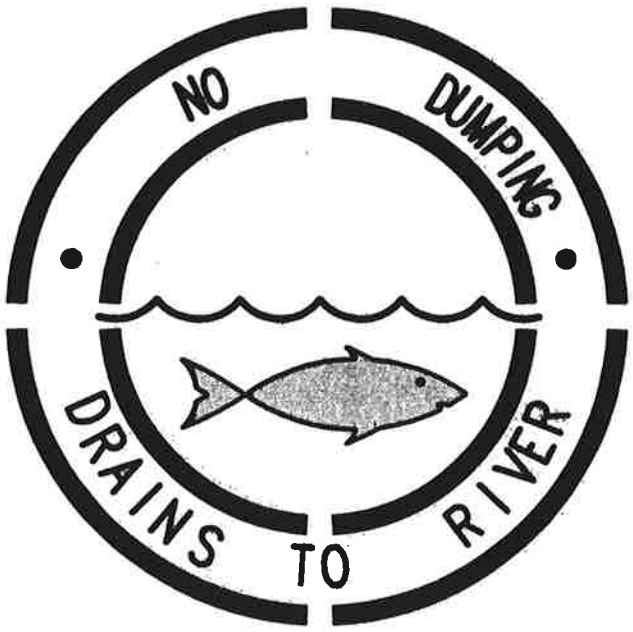

SAMPLE STENCIL TO BE USED NEAR GRATE AND CURB OPENING INLETS

SYMBOL TO BE 24" IN DIAMETER

Thienes Engineering
CIVIL ENGINEERING • LAND SURVEYING
14349 FIRESTONE BOULEVARD
LA MIRADA, CALIFORNIA 90638
PH.(714)521-4811 FAX(714)521-4173

SAMPLE CATCH BASIN STENCIL
PER BMP SD-13

Drain Inlet Insert MP-52

General Description

Drain inlet inserts, also known as catch basin, drop inlet or curb inlet inserts, are used to remove pollutants at the point of entry to the storm drain system. There are a multitude of inserts of various shapes and configurations including baffles, baskets, boxes, fabrics, sorbent media, screens, and skimmers. The effectiveness of drain inlet inserts depends on their design, application, loading, and frequency of maintenance to remove accumulated sediment, trash, and debris.

Inspection / Maintenance Considerations

Routine inspection and maintenance is necessary to maintain functionality of drain inlet inserts and to prevent re-suspension and discharge of accumulated pollutants. Maintenance activities vary depending on the type of drain inlet insert being implemented; refer to the manufacturer's recommendations for more information.

Advanced BMPs Covered

Maintenance Concerns

- *Sediment, Trash, and Debris Accumulations*
- *Pollutant Re-suspension and Discharge*

Targeted Constituents*

Sediment	✓
Nutrients	✓
Trash	✓
Metals	✓
Bacteria	
Oil and Grease	✓
Organics	✓

**Removal Effectiveness varies for different manufacturer designs. See New Development and Redevelopment Handbook-Section 5 for more information.*

CASQA
CALIFORNIA STORMWATER QUALITY ASSOCIATION®

Inspection Activities	Suggested Frequency
☐ Verify that stormwater enters the unit and does not leak around the perimeter.	After construction.
☐ Inspect for sediment, trash, and debris buildup and proper functioning.	At the beginning of the wet season and after significant storms
Maintenance Activities	**Suggested Frequency**
☐ Remove accumulated sediment, trash, and debris. ☐ Replace sorbent media.	At the beginning of the wet season and as necessary

References

California Department of Transportation. *Treatment BMP Technology Report (CTSW-RT-09-239.06),* April, 2010. http://www.dot.ca.gov/hq/env/stormwater/pdf/CTSW-RT-09-239-06.pdf.

California Stormwater Quality Association. *Stormwater Best Management Practice Handbook, New Development and Redevelopment,* 2003. https://www.casqa.org/resources/bmp-handbooks/new-development-redevelopment-bmp-handbook.

Orange County Stormwater Program. Technical Guidance Document BMP Fact Sheets. http://media.ocgov.com/gov/pw/watersheds/documents/wqmp/tgd/technical_guidance_document_bmp_fact_sheets.asp.

San Francisco Public Utilities Commission, et al. San Francisco Stormwater Design Guidelines. Appendix A, Stormwater BMP Fact Sheets, June, 2010. http://www.sfwater.org/modules/showdocument.aspx?documentid=2778.

Tahoe Regional Planning Agency. Best Management Practices Handbook, 2012. http://www.tahoebmp.org/Documents/2012%20BMP%20Handbook.pdf.

U.S. Environmental Protection Agency, Post-Construction Stormwater Management in New Development and Redevelopment. BMP Fact Sheets. Available at: http://cfpub.epa.gov/npdes/stormwater/menuofbmps/index.cfm?action=min_measure&min_measure_id=5.

Ventura Countywide Stormwater Quality Management Program. *Technical Guidance Manual for Stormwater Quality Control Measures,* May, 2010. http://www.vcstormwater.org/documents/workproducts/technicalguidancemanual/2010revisions/Ventura%20Technical%20Guidance%20Document_5-6-10.pdf.

Curb Inlet Filter

Bio Clean
A Forterra Company

OPERATION & MAINTENANCE

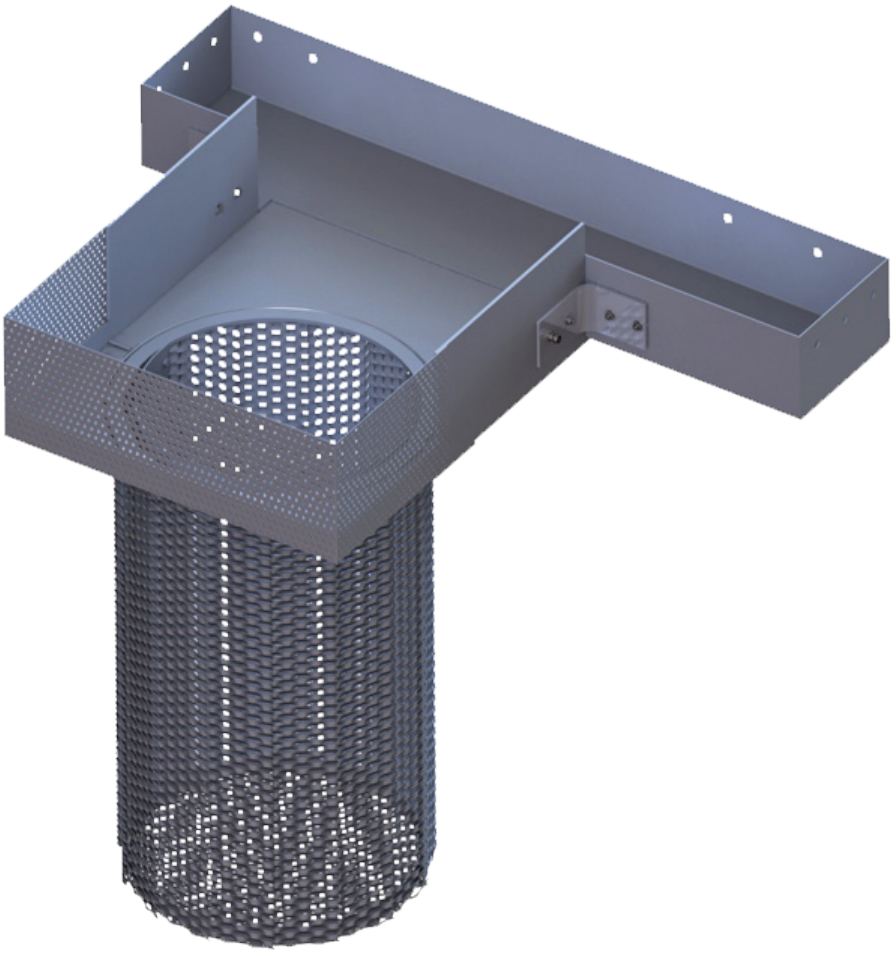

Bio Clean Environmental Services, Inc.
398 Via El Centro
Oceanside, CA 92058

www.BioCleanEnvironmental.com
p: 760.433.7640
f: 760.433.3176

Bio Clean
A Forterra Company

OPERATION & MAINTENANCE

The Bio Clean Curb Inlet Filter is a stormwater device designed to remove high levels of trash, debris, sediments and hydrocarbons. The filter is available in several configurations including trash full capture, multi-level screening, Kraken membrane filter and media filter variations. This manual covers maintenance procedures of the trash full capture and multi-level screening configurations. A supplemental manual is available for the Kraken and media filter variations. The innovative trough & weir system is mounted along the curb face and directs incoming stormwater toward the filter basket which is positioned "directly" under the manhole access opening regardless of its location in the catch basin. This innovative design allows the filter to be cleaned from finish surface without access into the catch basin, therefore drastically reducing maintenance time and eliminating confined space entry. The filter has a lifting handle allowing for the filter to be removed easily through the manhole. The weir also folds up to allow for unimpeded access into the basin for routine maintenance or pipe jetting.

As with all stormwater BMPs, inspection and maintenance on the Curb Inlet Filter is necessary. Stormwater regulations require BMPs be inspected and maintained to ensure they are operating as designed to allow for effective pollutant removal and provide protection to receiving water bodies. It is recommended that inspections be performed multiple times during the first year to assess site-specific loading conditions. This is recommended because pollutant loading can vary greatly from site to site. Variables such as nearby soil erosion or construction sites, winter sanding of roads, amount of daily traffic and land use can increase pollutant loading on the system. The first year of inspections can be used to set inspection and maintenance intervals for subsequent years. Without appropriate maintenance a BMP can exceed its storage capacity which can negatively affect its continued performance in removing and retaining captured pollutants.

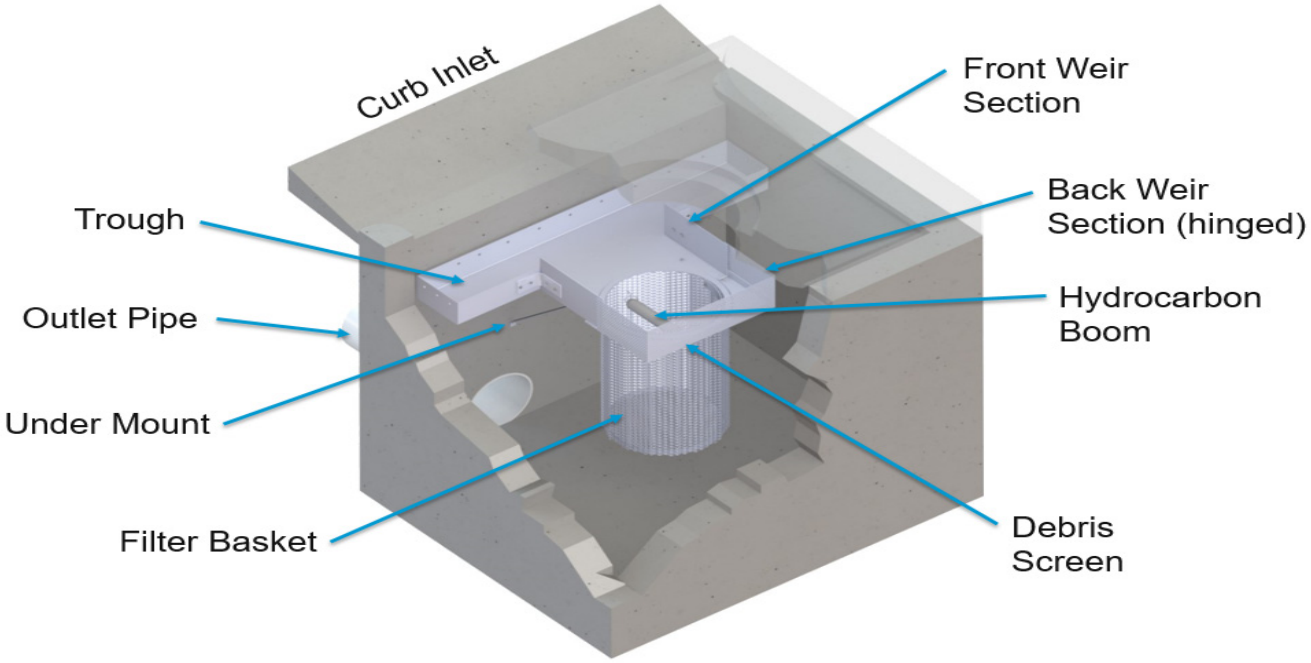

System Diagram:

Inspection Equipment

Following is a list of equipment to allow for simple and effective inspection of the Curb Inlet Filter:

- Bio Clean Environmental Inspection Form (contained within this manual).
- Manhole hook or appropriate tools to remove access hatches and covers.
- Appropriate traffic control signage and procedures.
- Protective clothing and eye protection.
- Note: entering a confined space requires appropriate safety and certification. It is generally not required for routine inspections or maintenance of the system.

Inspection Steps

The core to any successful stormwater BMP maintenance program is routine inspections. The inspection steps required on the Curb Inlet Fitler are quick and easy. As mentioned above the first year should be seen as the maintenance interval establishment phase. During the first year more frequent inspections should occur in order to gather loading data and maintenance requirements for that specific site. This information can be used to establish a base for long-term inspection and maintenance interval requirements.

The Curb Inlet Filter can be inspected though visual observation without entry into the catch basin. All necessary pre-inspection steps must be carried out before inspection occurs, such as safety measures to protect the inspector and nearby pedestrians from any dangers associated with an open access hatch or manhole. Once the manhole has been safely opened the inspection process can proceed:

- Prepare the inspection form by writing in the necessary information including project name, location, date & time, unit number and other info (see inspection form).
- Observe the inside of the catch basin through the manhole. If minimal light is available and vision into the unit is impaired utilize a flashlight to see inside the catch basin.
- Look for any out of the ordinary obstructions in the catch basin, trough, weir, filter basket, basin floor our outlet pipe. Write down any observations on the inspection form.
- Through observation and/or digital photographs estimate the amount of trash, foliage and sediment accumulated inside the filter basket. Record this information on the inspection form.
- Observe the condition and color of the hydrocarbon boom. Record this information on the inspection form.

- Finalize inspection report for analysis by the maintenance manager to determine if maintenance is required.

Maintenance Indicators

Based upon observations made during inspection, maintenance of the system may be required based on the following indicators:

- Missing or damaged internal components.
- Obstructions in the trough, weir, filter basket or catch basin.
- Excessive accumulation of trash, foliage and sediment in the filter basket and/or trough and weir sections. Maintenance is required when the basket is greater than half-full.
- The following chart shows the 50% and 100% storage capacity of each filter height:

Model	Filter Basket Diameter (in)	Filter Basket Height (in)	50% Storage Capacity (cu ft)	100% Storage Capacity (cu ft)
BC-CURB-30	18	30	2.21	4.42
BC-CURB-24	18	24	1.77	3.53
BC-CURB-18	18	18	1.33	2.65
BC-CURB-12	18	12	0.88	1.77

Maintenance Equipment

It is recommended that a vacuum truck be utilized to minimize the time required to maintain the Curb Inlet Filter though it can easily cleaned by hand:

- Bio Clean Environmental Maintenance Form (contained in O&M Manual).
- Manhole hook or appropriate tools to access hatches and covers.
- Appropriate safety signage and procedures.
- Protective clothing and eye protection.
- Note: entering a confined space requires appropriate safety and certification. It is generally not required for routine maintenance of the system. Small or large vacuum truck (with pressure washer attachment preferred).

Maintenance Procedures

It is recommended that maintenance occurs at least two days after the most recent rain event to allow debris and sediments to dry out. Maintaining the system while flows are still entering it will increase the time and complexity required for maintenance. Cleaning of the Curb Inlet Filter can be performed from finish surface without entry into catch basin utilizing a vacuum truck. Some unique

and custom configurations may create conditions which would require entry for some or all of the maintenance procedures. Once all safety measures have been set up cleaning of the Curb Inlet Filter can proceed as followed:

- Remove all manhole cover or access hatches (traffic control and safety measures to be completed prior).
- Using an extension on a vacuum truck position the hose over the opened manhole or hatch opening. Insert the vacuum hose down into the filter basket and suck out trash, foliage and sediment. A pressure wash is recommended and will assist in spraying of any debris stuck on the side or bottom of the filter basket. If the filter basket is full, trash, sediment, and debris will accumulate inside the trough and weir sections of the system. Once the filter basket is clean power wash the weir and trough pushing these debris into the filter basket (leave the hose in the filter basket during this process so entering debris will be sucked out). Power wash off the trough, weir, debris screen, and filter basket sides and bottom.
- Next remove the hydrocarbon boom that is attached to the inside of the filter basket. The hydrocarbon boom is fastened to rails on two opposite sides of the basket (vertical rails). Assess the color and condition of the boom using the following information in the next bullet point. If replacement is required install and fasten on a new hydrocarbon boom. Booms can be ordered directly from the manufacturer.
- Follow is a replacement indication color chart for the hydrocarbon booms:

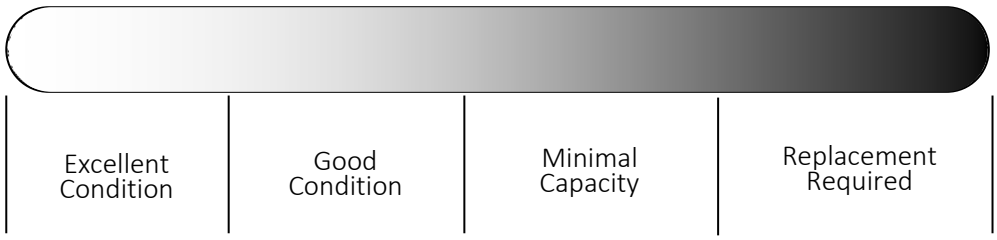

- The last step is to close up and replace the manhole or hatch and remove all traffic control.
- All removed debris and pollutants shall be disposed of following local and state requirements.
- Disposal requirements for recovered pollutants may vary depending on local guidelines. In most areas the sediment, once dewatered, can be disposed of in a sanitary landfill. It is not anticipated that the sediment would be classified as hazardous waste.
- In the case of damaged components, replacement parts can be ordered from the manufacturer. Hydrocarbon booms can also be ordered directly from the manufacturer as previously noted.

Maintenance Sequence

Remove manhole cover and set up vacuum truck to clean the filter basket. Ensure all traffic control and safety measures are in place.

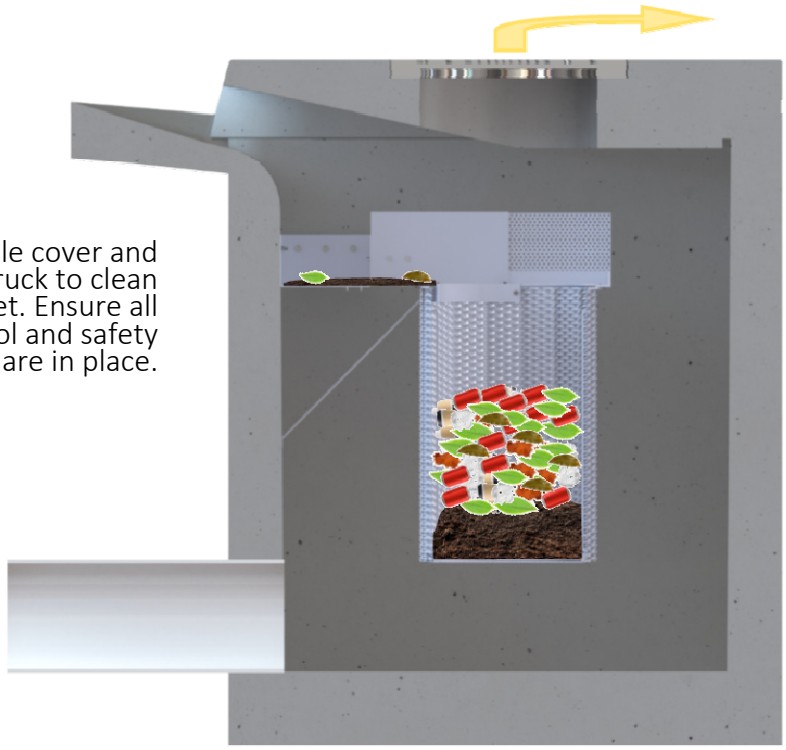

Insert the vacuum hose down into the filter basket and suck out debris. Use a pressure washer to assist in vacuum removal. Pressure wash off the weir and trough and vacuum out any remaining debris.

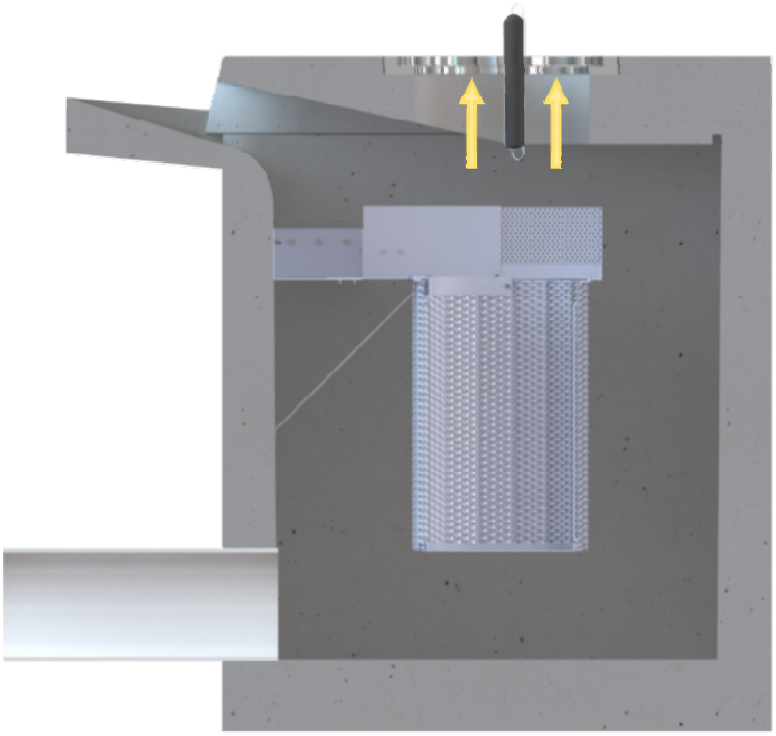

Remove the hydrocarbon boom that is attached to the inside of the filter basket. The hydrocarbon boom is fastened to rails on two opposite sides of the basket (vertical rails). Assess the color and condition of the boom using the following information in the next bullet point. If replacement is required install and fasten on a new hydrocarbon boom.

Close up and replace the manhole or hatch and remove all traffic control. All removed debris and pollutants shall be disposed of following local and state requirements.

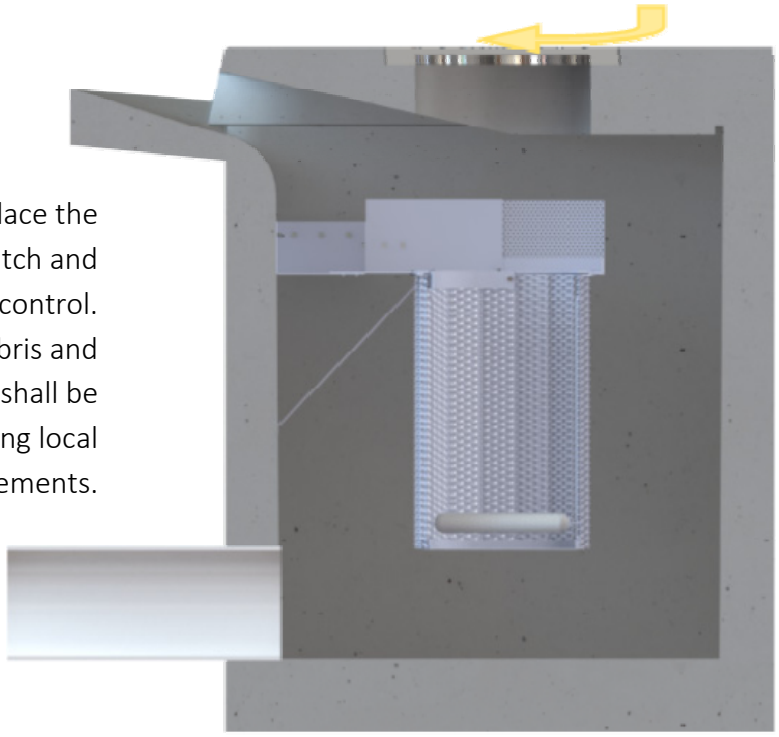

For Maintenance Services or Information Please Contact Us At:
760-433-7640
Or Email: info@biocleanenvironmental.com

Bio Clean
A Forterra Company

Inspection and Maintenance Report
Catch Basin Only

Project Name _____

Project Address _____ (city) (Zip Code)

Owner / Management Company _____

Contact _____ Phone ( ) –

Inspector Name _____ Date ____/____/____ Time _____ AM / PM

Type of Inspection ☐ Routine ☐ Follow Up ☐ Complaint ☐ Storm Storm Event in Last 72-hours? ☐ ☐

Weather Condition _____ Additional Notes _____

For Office Use Only
(Reviewed By)
(Date)
Office personnel to complete section to the left.

Site Map #	GPS Coordinates of Insert	Catch Basin Size	Evidence of Illicit Discharge?	Trash Accumulation	Foliage Accumulation	Sediment Accumulation	Signs of Structural Damage?	Functioning Properly or Maintenance Needed?
1	Lat: Long:							
2	Lat: Long:							
3	Lat: Long:							
4	Lat: Long:							
5	Lat: Long:							
6	Lat: Long:							
7	Lat: Long:							
8	Lat: Long:							
10	Lat: Long:							
11	Lat: Long:							
12	Lat: Long:							

Comments:

398 Via El Centro, Oceanside, CA 92058 P. 760.433.7640 F. 760.433.3176

Grate Inlet Filter

Bio Clean
A Forterra Company

OPERATION & MAINTENANCE

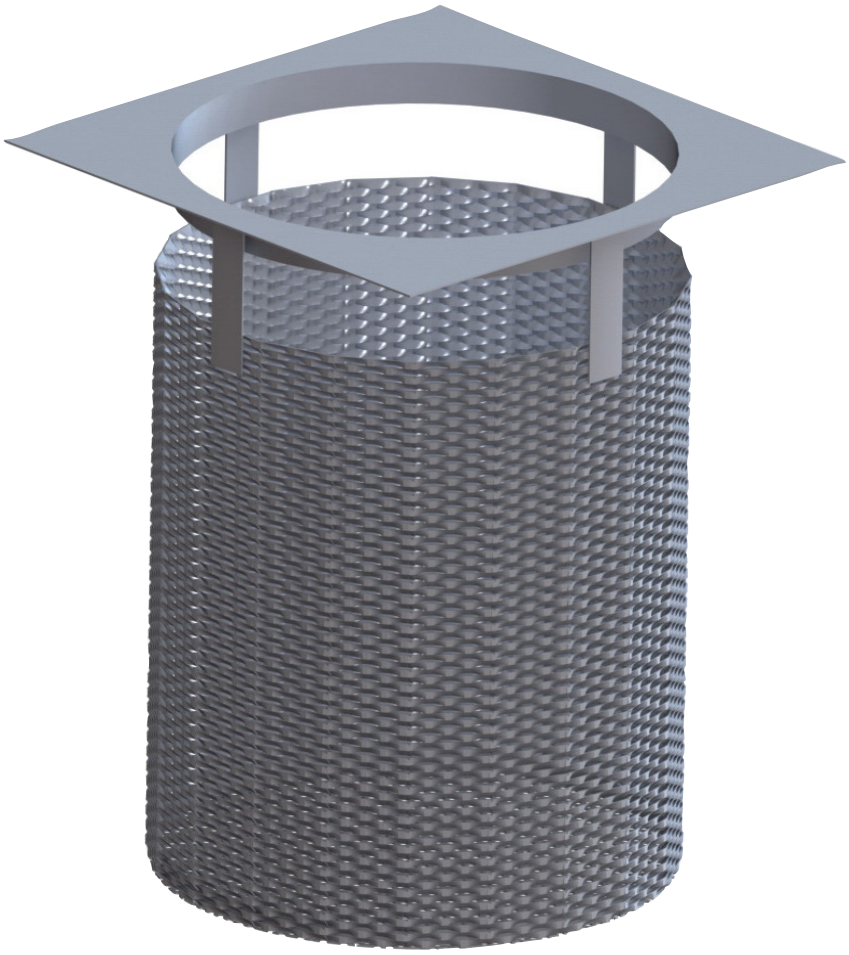

Bio Clean Environmental Services, Inc.
398 Via El Centro
Oceanside, CA 92058

www.BioCleanEnvironmental.com
p: 760.433.7640
f: 760.433.3176

OPERATION & MAINTENANCE

The Bio Clean Grate Inlet Filter is a stormwater device designed to remove high levels of trash, debris, sediments and hydrocarbons. The filter is available in several configurations including trash full capture, multi-level screening, Kraken membrane filter and media filter variations. This manual covers maintenance procedures of the trash full capture and multi-level screening configurations. A supplemental manual is available for the Kraken and media filter variations. This filter is made of 100% stainless steel and is available and various sizes and depths allowing it to fit in any grated catch basin inlet. The filters heavy duty construction allows for cleaning with any vacuum truck. The filet can also easily be cleaned by hand.

As with all stormwater BMPs, inspection and maintenance on the Grate Inlet Filter is necessary. Stormwater regulations require BMPs be inspected and maintained to ensure they are operating as designed to allow for effective pollutant removal and provide protection to receiving water bodies. It is recommended that inspections be performed multiple times during the first year to assess site-specific loading conditions. This is recommended because pollutant loading can vary greatly from site to site. Variables such as nearby soil erosion or construction sites, winter sanding of roads, amount of daily traffic and land use can increase pollutant loading on the system. The first year of inspections can be used to set inspection and maintenance intervals for subsequent years. Without appropriate maintenance a BMP can exceed its storage capacity which can negatively affect its continued performance in removing and retaining captured pollutants.

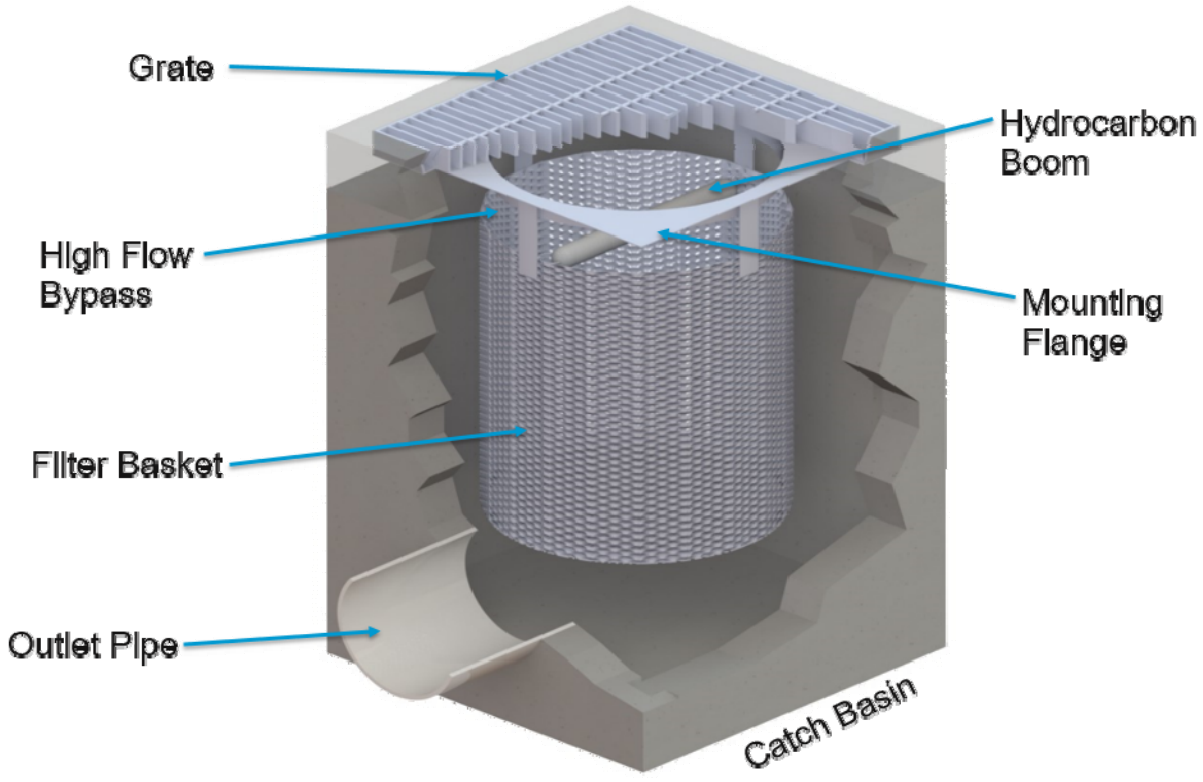

System Diagram:

Inspection Equipment

Following is a list of equipment to allow for simple and effective inspection of the Grate Inlet Filter:

- Bio Clean Environmental Inspection Form (contained within this manual).
- Manhole hook or appropriate tools to remove access hatches and covers.
- Appropriate traffic control signage and procedures.
- Protective clothing and eye protection.
- Note: entering a confined space requires appropriate safety and certification. It is generally not required for routine inspections or maintenance of the system.

Inspection Steps

The core to any successful stormwater BMP maintenance program is routine inspections. The inspection steps required on the Grate Inlet Filter are quick and easy. As mentioned above the first year should be seen as the maintenance interval establishment phase. During the first year more frequent inspections should occur in order to gather loading data and maintenance requirements for that specific site. This information can be used to establish a base for long-term inspection and maintenance interval requirements.

The Grate Inlet Filter can be inspected though visual observation. All necessary pre-inspection steps must be carried out before inspection occurs, such as safety measures to protect the inspector and nearby pedestrians from any dangers associated with an open grated inlet. Once the grate has been safely removed the inspection process can proceed:

- Prepare the inspection form by writing in the necessary information including project name, location, date & time, unit number and other info (see inspection form).
- Observe the filter with the grate removed.
- Look for any out of the ordinary obstructions on the grate or in the filter and its bypass. Write down any observations on the inspection form.
- Through observation and/or digital photographs estimate the amount of trash, foliage and sediment accumulated inside the filter basket. Record this information on the inspection form.
- Observe the condition and color of the hydrocarbon boom. Record this information on the inspection form.
- Finalize inspection report for analysis by the maintenance manager to determine if maintenance is required.

Maintenance Indicators

Based upon observations made during inspection, maintenance of the system may be required based on the following indicators:

- Missing or damaged internal components.
- Obstructions in the filter basket and its bypass.
- Excessive accumulation of trash, foliage and sediment in the filter basket. Maintenance is required when the basket is greater than half-full.
- The following chart shows the 50% and 100% storage capacity of each filter height:

Model	Filter Basket Diameter (in)	Filter Basket Height (in)	50% Storage Capacity (cu ft)	100% Storage Capacity (cu ft)
BC-GRATE-12-12-12	10.00	12.00	0.27	0.55
BC-GRATE-18-18-18	16.00	18.00	1.05	2.09
BC-GRATE-24-24-24	21.00	24.00	2.41	4.81
BC-GRATE-30-30-24	27.00	24.00	3.98	7.95
BC-GRATE-36-36-24	33.00	24.00	5.94	11.88
BC-GRATE-48-48-18	44.00	18.00	7.92	15.84

Maintenance Equipment

It is recommended that a vacuum truck be utilized to minimize the time required to maintain the Curb Inlet Filter, though it can easily cleaned by hand:

- Bio Clean Environmental Maintenance Form (contained in O&M Manual).
- Manhole hook or appropriate tools to remove the grate.
- Appropriate safety signage and procedures.
- Protective clothing and eye protection.
- Note: entering a confined space requires appropriate safety and certification. It is generally not required for routine maintenance of the system. Small or large vacuum truck (with pressure washer attachment preferred).

Maintenance Procedures

It is recommended that maintenance occurs at least two days after the most recent rain event to allow debris and sediments to dry out. Maintaining the system while flows are still entering it will increase the time and complexity required for maintenance. Cleaning of the Grate Inlet Filter can be performed utilizing a vacuum truck. Once all safety measures have been set up cleaning of the Grate Inlet Filter can proceed as followed:

- Remove grate (traffic control and safety measures to be completed prior).
- Using an extension on a vacuum truck position the hose over the opened catch basin. Insert the vacuum hose down into the filter basket and suck out trash, foliage and sediment. A pressure wash is recommended and will assist in spraying of any debris stuck on the side or bottom of the filter basket. Power wash off the filter basket sides and bottom.
- Next remove the hydrocarbon boom that is attached to the inside of the filter basket. The hydrocarbon boom is fastened to rails on two opposite sides of the basket (vertical rails). Assess the color and condition of the boom using the following information in the next bullet point. If replacement is required install and fasten on a new hydrocarbon boom. Booms can be ordered directly from the manufacturer.
- Follow is a replacement indication color chart for the hydrocarbon booms:

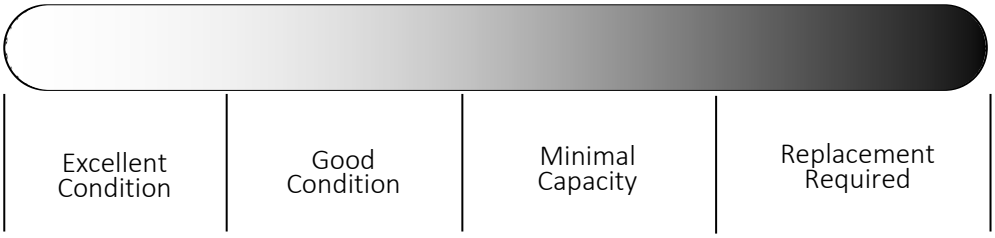

- The last step is to replace the grate and remove all traffic control.
- All removed debris and pollutants shall be disposed of following local and state requirements.
- Disposal requirements for recovered pollutants may vary depending on local guidelines. In most areas the sediment, once dewatered, can be disposed of in a sanitary landfill. It is not anticipated that the sediment would be classified as hazardous waste.
- In the case of damaged components, replacement parts can be ordered from the manufacturer. Hydrocarbon booms can also be ordered directly from the manufacturer as previously noted.

Maintenance Sequence

Remove grate and set up vacuum truck to clean the filter basket.

Insert the vacuum hose down into the filter basket and suck out debris. Use a pressure washer to assist in vacuum removal. Pressure wash off screens.

Remove the hydrocarbon boom that is attached to the inside of the filter basket. The hydrocarbon boom is fastened to rails on two opposite sides of the basket (vertical rails). Assess the color and condition of the boom using the following information in the next bullet point. If replacement is required install and fasten on a new hydrocarbon boom.

Close up and replace the grate and remove all traffic control. All removed debris and pollutants shall be disposed of following local and state requirements.

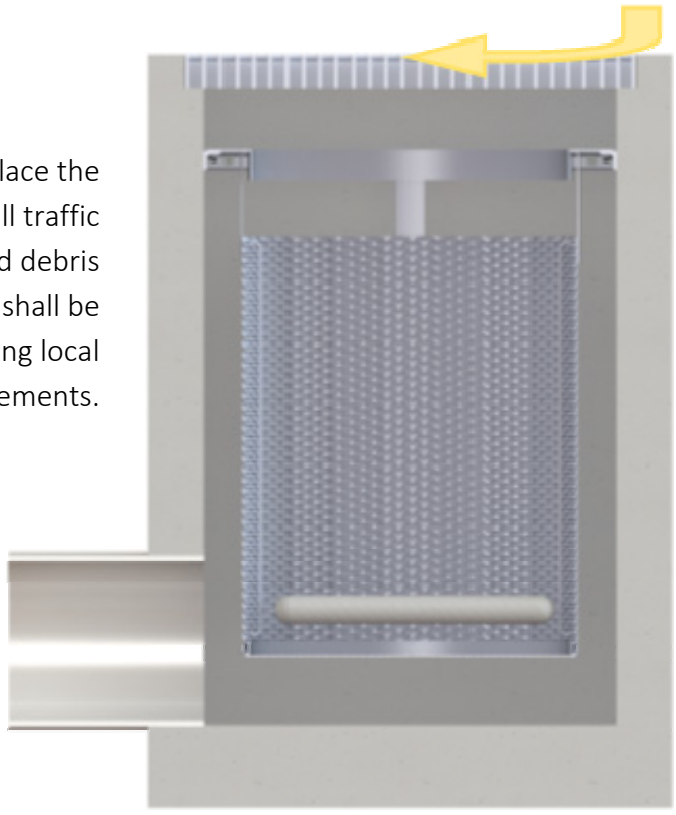

For Maintenance Services or Information Please Contact Us At:
760-433-7640
Or Email:
info@biocleanenvironmental.com

Bio Clean
A Forterra Company

Inspection and Maintenance Report
Catch Basin Only

Project Name _____

Project Address _____ (city) (Zip Code)

Owner / Management Company _____

Contact _____ Phone ( ) –

Inspector Name _____ Date ____/____/____ Time _____ AM / PM

Type of Inspection ☐ Routine ☐ Follow Up ☐ Complaint ☐ Storm Storm Event in Last 72-hours? ☐ ☐

Weather Condition _____ Additional Notes _____

For Office Use Only
(Reviewed By)
(Date)
Office personnel to complete section to the left.

Site Map #	GPS Coordinates of Insert	Catch Basin Size	Evidence of Illicit Discharge?	Trash Accumulation	Foliage Accumulation	Sediment Accumulation	Signs of Structural Damage?	Functioning Properly or Maintenance Needed?
1	Lat: Long:							
2	Lat: Long:							
3	Lat: Long:							
4	Lat: Long:							
5	Lat: Long:							
6	Lat: Long:							
7	Lat: Long:							
8	Lat: Long:							
10	Lat: Long:							
11	Lat: Long:							
12	Lat: Long:							

Comments:

398 Via El Centro, Oceanside, CA 92058 P. 760.433.7640 F. 760.433.3176

Infiltration Basin TC-11

General Description

An infiltration basin is a shallow impoundment that is designed to infiltrate stormwater. Infiltration basins store stormwater runoff until it gradually exfiltrates into the underlying soil. Pollutant removal occurs through the infiltration of runoff and the adsorption of pollutants into the soil and vegetation. Additional benefits include:

- Reduced runoff volume and attenuation of peak flows, and
- Facilitated groundwater recharge thus helping to maintain low flows in stream systems.

Inspection/Maintenance Considerations

The use and regular maintenance of pretreatment BMPs will significantly minimize maintenance requirements for the basin. Installing vegetated swales or a sediment forebay upstream from the infiltration basin can provide effective pretreatment and reduce maintenance.

Spill response procedures and controls should be implemented to prevent spills from reaching the infiltration system. This BMP may require groundwater monitoring, and basins cannot be put into operation until the upstream tributary area is stabilized.

Advanced BMPs Covered

Maintenance Concerns

- *Vector Control*
- *Clogged soil or outlet structures*
- *Vegetation/Landscape Maintenance*
- *Groundwater contamination*
- *Accumulation of metals*
- *Aesthetics*

Targeted Constituents

Sediment	■
Nutrients	■
Trash	■
Metals	■
Bacteria	■
Oil and Grease	■
Organics	■

Legend (Removal Effectiveness)

● Low ▲ Medium ■ High

✱ Requires Pretreatment

Note: The removal effectiveness ratings shown in the table are for properly designed, sited, and maintained BMPs; some configurations will have variations in pollutant effectiveness.

CASQA
CALIFORNIA STORMWATER QUALITY ASSOCIATION®

Inspection Activities	Suggested Frequency
☐ Observe drain time for a storm after completion or modification of the facility to confirm that the desired drain time has been obtained. ☐ Newly established vegetation should be inspected several times to determine if any landscape maintenance (reseeding, irrigation, etc.) is necessary. ☐ Inspect for upslope or adjacent contributing sediment sources and ensure that pretreatment systems are in place.	Post construction and semi-annually (beginning and end of rainy season)
☐ Inspect for the following issues: differential accumulation of sediment, signs of wetness or damage to structures, erosion of the basin floor, dead or dying grass on the bottom, condition of riprap, drain time, signs of petroleum hydrocarbon contamination, standing water, trash and debris, sediment accumulation, slope stability, pretreatment device condition	Semi-annually and after extreme events
Maintenance Activities	**Suggested Frequency**
☐ Factors responsible for clogging should be repaired immediately.	Immediately
☐ Remove invasive weeds once monthly during the first two growing seasons.	Monthly during growing season
☐ Stabilize eroded banks with erosion control mat or mulch and revegetate. ☐ Repair undercut and eroded areas at inflow and outflow structures. ☐ Maintain access to the basin for regular maintenance activities. ☐ Mow as appropriate for vegetative cover species. ☐ Monitor health of vegetation and replace as necessary. ☐ Control mosquitoes as necessary. ☐ Remove litter and debris from infiltration basin area as required. ☐ Trim vegetation to prevent establishment of woody vegetation that decreases storage volume.	Standard maintenance (as needed)
☐ Mow and remove grass clippings, litter, and debris. ☐ Replant eroded or barren spots to prevent erosion and accumulation of sediment.	Semi-annual
☐ Scrape bottom and remove sediment when accumulated sediment reduces original infiltration rate by 25-50%. Restore original cross-section and infiltration rate. Properly dispose of sediment. ☐ Seed or sod to restore ground cover. ☐ Disc or otherwise aerate bottom. ☐ Dethatch basin bottom.	3-5 year maintenance

If there are actual signs of clogging or significant loss of infiltrative capacity the following maintenance activities should be considered:

- ☐ Mechanically de-thatching and/or aerating the top soils along the sides and bottom of the basin.
- ☐ Tilling or dicing to scarify the bottom of the basin

These activities should be on an "as-needed" rather than on a routine basis. Always remove deposited sediments before scarification, and use a hand-guided rotary tiller, if possible, or a disc harrow pulled by a light tractor.

Clogged infiltration basins with surface standing water can become a breeding area for mosquitoes and midges. Maintenance efforts associated with infiltration basins should include frequent inspections to ensure that water infiltrates into the subsurface completely (recommended infiltration rate of 96 hours or less) and that vegetation is carefully managed to prevent creating mosquito and other vector habitats.

Additional Information

In most cases, surface sediment removed from an infiltration basin during periodic maintenance to restore capacity does not contain toxic materials (e/g metals, oil and grease, or organics) at levels posing a hazardous concern. Studies to date indicate that pond sediments are generally below toxicity limits and can be safely landfilled or disposed onsite. Onsite sediment disposal is always preferable (if local authorities permit) as long as the sediments are deposited away from the perimeter to prevent their reentry into the basin. Sediments should be tested for toxic materials in compliance with current landfill requirements and disposed of properly.

Maintenance activities should use lightweight equipment (e.g. bobcat), which will not compact the underlying soil to remove the top layer of sediment. The remaining soil should be tilled and revegetated as soon as possible.

Sediment removal within the basin should be performed when the sediment is dry enough so that it is cracked and readily separates from the basin floor. This minimizes intermixing of the finer sediment with underlying coarser material on the basin floor.

Special maintenance considerations are required maintain infiltration basins effectiveness in cold climates. Treating runoff containing salt-based deicers in an infiltration basin may reduce soil fertility cause vegetation to fail. Incorporating mulch into the soil can help to mitigate this problem. Infiltration basins should not be used to store snow plowed from highways or parking lots. The sand in this snow can clog the basin. In addition, the chlorides and other pollutants can contaminate the groundwater.

References

California Department of Transportation. *Treatment BMP Technology Report (CTSW-RT-09-239.06)*, 2010. Available online at: http://www.dot.ca.gov/hq/env/stormwater/pdf/CTSW-RT-09-239-06.pdf.

California Stormwater Quality Association. *Stormwater Best Management Practice Handbook, New Development and Redevelopment*, 2003. Available online at: https://www.casqa.org/resources/bmp-handbooks/new-development-redevelopment-bmp-handbook.

Riverside County Flood Control and Water Conservation District. *Riverside County Design Handbook for Low Impact Development Best Management Practices,* 2011. Available online at: http://rcflood.org/downloads/NPDES/Documents/LIDManual/LID_BMP_Design_Handbook.pdf.

San Francisco Public Utilities Commission, et al. San Francisco Stormwater Design Guidelines. Appendix A, Stormwater BMP Fact Sheets, 2010. Available online at: http://www.sfwater.org/modules/showdocument.aspx?documentid=2778.

Stormwater Managers Resource Center. http://www.stormwatercenter.net.

Stormwater Mangers Resource Center, Stormwater Practices for Cold Climates. http://www.stormwatercenter.net/Cold%20Climates/cold-climates.htm.

Tahoe Regional Planning Agency. Best Management Practices Handbook, 2012. Available online at: http://www.tahoebmp.org/Documents/2012%20BMP%20Handbook.pdf.

U.S. Environmental Protection Agency, Post-Construction Stormwater Management in New Development and Redevelopment. BMP Fact Sheets. Available online at:http://cfpub.epa.gov/npdes/stormwater/menuofbmps/index.cfm?action=min_measure&min_measure_id=5.

Ventura Countywide Stormwater Quality Management Program. *Technical Guidance Manual for Stormwater Quality Control Measures*, 2010. Available online at:http://www.vcstormwater.org/documents/workproducts/technicalguidancemanual/2010revisions/Ventura%20Technical%20Guidance%20Document_5-6-10.pdf.

Watershed Management Institute, Inc. *Operation, Maintenance, and Management of Stormwater Management Systems*, 1997. Available online at: http://www.stormwater.ucf.edu/research/stormwaterOMM/stormwateromm.pdf.

MC-4500 CHAMBER

Designed to meet the most stringent industry performance standards for superior structural integrity while providing designers with a cost-effective method to save valuable land and protect water resources. The StormTech system is designed primarily to be used under parking lots, thus maximizing land usage for private (commercial) and public applications. StormTech chambers can also be used in conjunction with Green Infrastructure, thus enhancing the performance and extending the service life of these practices.

STORMTECH MC-4500 CHAMBER
(not to scale)

Nominal Chamber Specifications

Size (L x W x H)
52” x 100” x 60”
1,321 mm x 2,540 mm x 1,524 mm

Chamber Storage
106.5 ft^3 (3.01 m^3)

Min. Installed Storage*
162.6 ft^3 (4.60 m^3)

Weight
120 lbs (54.4 kg)

Shipping
7 chambers/pallet
11 pallets/truck

*Assumes a minimum of 12” (300 mm) of stone above, 9” (230 mm) of stone below chambers, 9” (230 mm) of stone between chambers/end caps and 40% stone porosity.

STORMTECH MC-4500 END CAP
(not to scale)

Nominal End Cap Specifications

Size (L x W x H)
35.1” x 90.2” x 59.4”
891 mm x 2,291 mm x 1,509 mm

End Cap Storage
35.7 ft^3 (1.01 m^3)

Min. Installed Storage*
108.7 ft^3 (3.08 m^3)

Weight
120 lbs (54.4 kg)

Shipping
7 end caps/pallet
11 pallets/truck

*Assumes a minimum of 12” (300 mm) of stone above, 9” (230 mm) of stone below, 6” (150 mm) of stone perimeter, 9” (230 mm) of stone between chambers/end caps and 40% stone porosity.

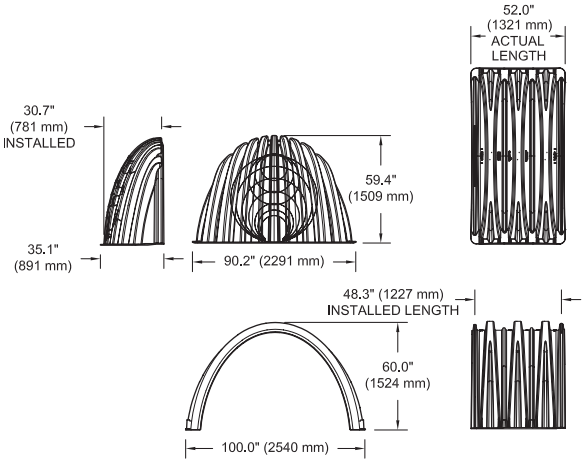

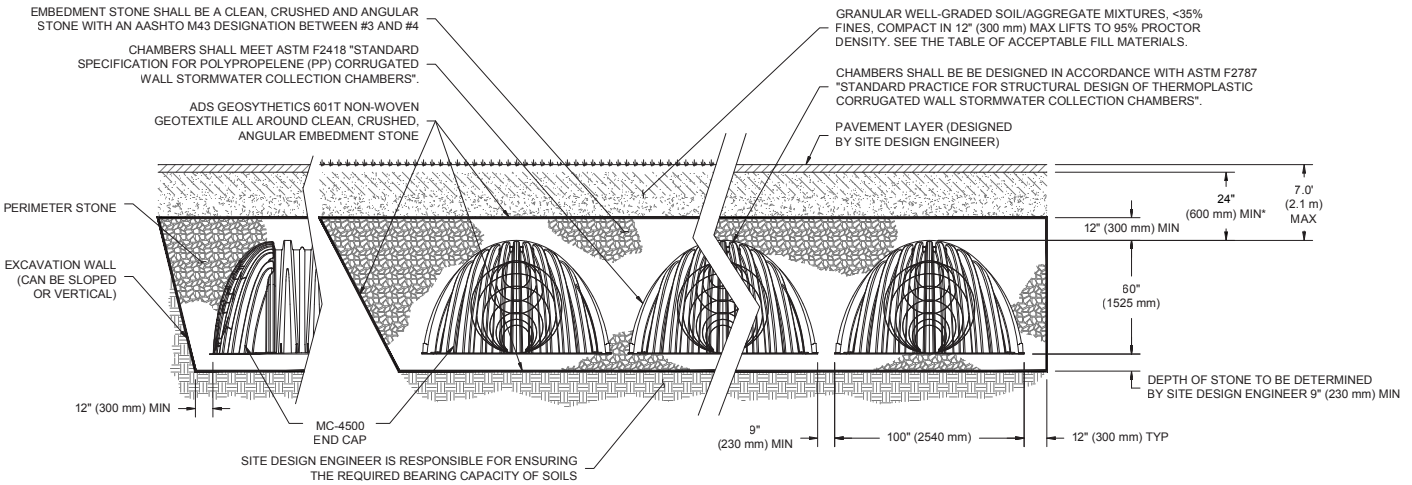

*MINIMUM COVER TO BOTTOM OF FLEXIBLE PAVEMENT. FOR UNPAVED INSTALLATIONS WHERE RUTTING FROM VEHICLES MAY OCCUR, INCREASE COVER TO 30" (750 mm).

MC-4500 CHAMBER SPECIFICATIONS

STORAGE VOLUME PER CHAMBER FT³ (M³)

	Bare Chamber Storage ft³ (m³)	Chamber and Stone Foundation Depth in. (mm)			
		9" (230 mm)	12" (300 mm)	15" (375 mm)	18" (450 mm)
MC-4500 Chamber	106.5 (3.02)	162.6 (4.60)	166.3 (4.71)	169.6 (4.81)	173.6 (4.91)
MC-4500 End Cap	35.7 (1.0)	108.7 (3.08)	111.9 (3.17)	115.2 (3.26)	118.4 (3.35)

Note: Assumes 9" (230 mm) row spacing, 40% stone porosity, 12" (300 mm) stone above and includes the bare chamber/end cap volume. End cap volume assumes 12" (300 mm) stone perimeter.

AMOUNT OF STONE PER CHAMBER

ENGLISH TONS (yds³)	Stone Foundation Depth			
	9"	12"	15"	18"
MC-4500 Chamber	7.4 (5.2)	7.8 (5.5)	8.3 (5.9)	8.8 (6.2)
MC-4500 End Cap	9.6 (6.8)	10.0 (7.1)	10.4 (7.4)	10.9 (7.7)
METRIC KILOGRAMS (m³)	230 mm	300 mm	375 mm	450 mm
MC-4500 Chamber	6,681 (4.0)	7,117 (4.2)	7,552 (4.5)	7,987 (4.7)
MC-4500 End Cap	8,691 (5.2)	9,075 (5.4)	9,460 (5.6)	9,845 (5.9)

Note: Assumes 12" (300 mm) of stone above and 9" (230 mm) row spacing and 12" (300 mm) of perimeter stone in front of end caps.

VOLUME EXCAVATION PER CHAMBER YD³ (M³)

	Stone Foundation Depth			
	9" (230 mm)	12" (300 mm)	15" (375mm)	18" (450 mm)
MC-4500 Chamber	10.5 (8.0)	10.8 (8.3)	11.2 (8.5)	11.5 (8.8)
MC-4500 End Cap	9.3 (7.1)	9.6 (7.3)	9.9 (7.6)	10.2 (7.8)

Note: Assumes 9" (230 mm) of separation between chamber rows, 12" (300 mm) of perimeter in front of the end caps, and 24" (600 mm) of cover. The volume of excavation will varyas depth of cover increases.

Working on a project?
Visit us at www.stormtech.com
and utilize the StormTech Design Tool

For more information on the StormTech MC-4500 Chamber and other ADS products, please contact our Customer Service Representatives at 1-800-821-6710

*THE MOST **ADVANCED** NAME IN WATER MANAGEMENT SOLUTIONS™*

Advanced Drainage Systems, Inc.
4640 Trueman Blvd., Hilliard, OH 43026
1-800-821-6710 www.ads-pipe.com

ADS "Terms and Conditions of Sale" are available on the ADS website, www.ads-pipe.com
The ADS logo and the Green Stripe are registered trademarks of Advanced Drainage Systems, Inc.
StormTech® is a registered trademark of StormTech, Inc.
© 2017 Advanced Drainage Systems, Inc. #S26B1110 09/17 CS

StormTech
Detention • Retention • Water Quality
An ADS company

Isolator® Row O&M Manual

THE MOST ADVANCED NAME IN WATER MANAGEMENT SOLUTIONS™

ADS®

THE ISOLATOR® ROW

INTRODUCTION

An important component of any Stormwater Pollution Prevention Plan is inspection and maintenance. The StormTech Isolator Row is a technique to inexpensively enhance Total Suspended Solids (TSS) removal and provide easy access for inspection and maintenance.

THE ISOLATOR ROW

The Isolator Row is a row of StormTech chambers, either SC-160LP, SC-310, SC-310-3, SC-740, DC-780, MC-3500 or MC-4500 models, that is surrounded with filter fabric and connected to a closely located manhole for easy access. The fabric-wrapped chambers provide for settling and filtration of sediment as storm water rises in the Isolator Row and ultimately passes through the filter fabric. The open bottom chambers and perforated sidewalls (SC-310, SC- 310-3 and SC-740 models) allow storm water to flow both vertically and horizontally out of the chambers. Sediments are captured in the Isolator Row protecting the storage areas of the adjacent stone and chambers from sediment accumulation.

Two different fabrics are used for the Isolator Row. A woven geotextile fabric is placed between the stone and the Isolator Row chambers. The tough geotextile provides a media for storm water filtration and provides a durable surface for maintenance operations. It is also designed to prevent scour of the underlying stone and remain intact during high pressure jetting. A non-woven fabric is placed over the chambers to provide a filter media for flows passing through the perforations in the sidewall of the chamber. The non-woven fabric is not required over the SC-160LP, DC-780, MC-3500 or MC-4500 models as these chambers do not have perforated side walls.

The Isolator Row is typically designed to capture the “first flush” and offers the versatility to be sized on a volume basis or flow rate basis. An upstream manhole not only provides access to the Isolator Row but typically includes a high flow weir such that storm water flowrates or volumes that exceed the capacity of the Isolator Row overtop the over flow weir and discharge through a manifold to the other chambers.

The Isolator Row may also be part of a treatment train. By treating storm water prior to entry into the chamber system, the service life can be extended and pollutants such as hydrocarbons can be captured. Pre-treatment best management practices can be as simple as deep sump catch basins, oil-water separators or can be innovative storm water treatment devices. The design of the treatment train and selection of pretreatment devices by the design engineer is often driven by regulatory requirements. Whether pretreatment is used or not, the Isolator Row is recommended by StormTech as an effective means to minimize maintenance requirements and maintenance costs.

Note: See the StormTech Design Manual for detailed information on designing inlets for a StormTech system, including the Isolator Row.

Looking down the Isolator Row from the manhole opening, woven geotextile is shown between the chamber and stone base.

StormTech Isolator Row with Overflow Spillway (not to scale)

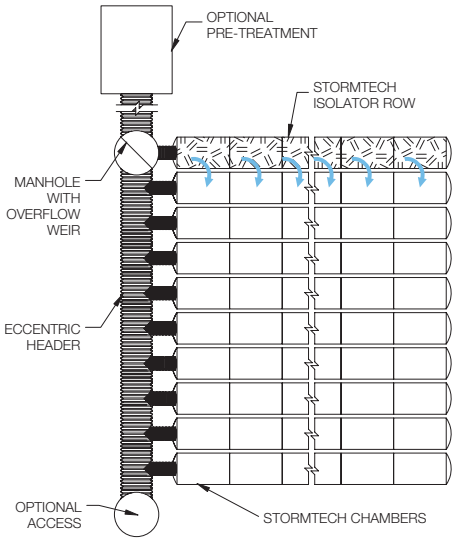

ISOLATOR ROW INSPECTION/MAINTENANCE

INSPECTION

The frequency of inspection and maintenance varies by location. A routine inspection schedule needs to be established for each individual location based upon site specific variables. The type of land use (i.e. industrial, commercial, residential), anticipated pollutant load, percent imperviousness, climate, etc. all play a critical role in determining the actual frequency of inspection and maintenance practices.

At a minimum, StormTech recommends annual inspections. Initially, the Isolator Row should be inspected every 6 months for the first year of operation. For subsequent years, the inspection should be adjusted based upon previous observation of sediment deposition.

The Isolator Row incorporates a combination of standard manhole(s) and strategically located inspection ports (as needed). The inspection ports allow for easy access to the system from the surface, eliminating the need to perform a confined space entry for inspection purposes.

If upon visual inspection it is found that sediment has accumulated, a stadia rod should be inserted to determine the depth of sediment. When the average depth of sediment exceeds 3 inches throughout the length of the Isolator Row, clean-out should be performed.

MAINTENANCE

The Isolator Row was designed to reduce the cost of periodic maintenance. By "isolating" sediments to just one row, costs are dramatically reduced by eliminating the need to clean out each row of the entire storage bed. If inspection indicates the potential need for maintenance, access is provided via a manhole(s) located on the end(s) of the row for cleanout. If entry into the manhole is required, please follow local and OSHA rules for a confined space entries.

Maintenance is accomplished with the JetVac process. The JetVac process utilizes a high pressure water nozzle to propel itself down the Isolator Row while scouring and suspending sediments. As the nozzle is retrieved, the captured pollutants are flushed back into the manhole for vacuuming. Most sewer and pipe maintenance companies have vacuum/JetVac combination vehicles. Selection of an appropriate JetVac nozzle will improve maintenance efficiency. Fixed nozzles designed for culverts or large diameter pipe cleaning are preferable. Rear facing jets with an effective spread of at least 45" are best. Most JetVac reels have 400 feet of hose allowing maintenance of an Isolator Row up to 50 chambers long. **The JetVac process shall only be performed on StormTech Isolator Rows that have AASHTO class 1 woven geotextile (as specified by StormTech) over their angular base stone.**

StormTech Isolator Row (not to scale)

Note: Non-woven fabric is only required over the inlet pipe connection into the end cap for SC-160LP, DC-780, MC-3500 and MC-4500 chamber models and is not required over the entire Isolator Row.

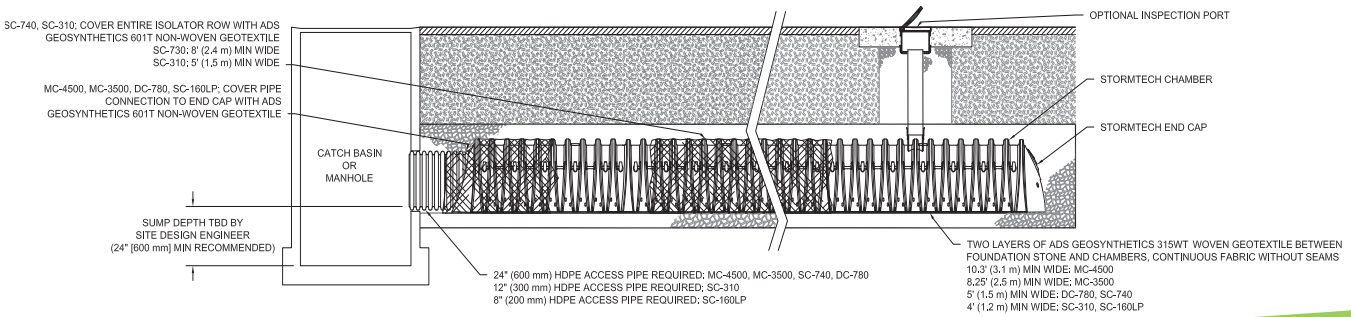

ISOLATOR ROW STEP BY STEP MAINTENANCE PROCEDURES

STEP 1
Inspect Isolator Row for sediment.
- A) Inspection ports (if present)
  - i. Remove lid from floor box frame
  - ii. Remove cap from inspection riser
  - iii. Using a flashlight and stadia rod,measure depth of sediment and record results on maintenance log.
  - iv. If sediment is at or above 3 inch depth, proceed to Step 2. If not, proceed to Step 3.
- B) All Isolator Rows
  - i. Remove cover from manhole at upstream end of Isolator Row
  - ii. Using a flashlight, inspect down Isolator Row through outlet pipe
    1. Mirrors on poles or cameras may be used to avoid a confined space entry
    2. Follow OSHA regulations for confined space entry if entering manhole
  - iii. If sediment is at or above the lower row of sidewall holes (approximately 3 inches), proceed to Step 2. If not, proceed to Step 3.

STEP 2
Clean out Isolator Row using the JetVac process.
- A) A fixed floor cleaning nozzle with rear facing nozzle spread of 45 inches or more is preferable
- B) Apply multiple passes of JetVac until backflush water is clean
- C) Vacuum manhole sump as required

STEP 3
Replace all caps, lids and covers, record observations and actions.

STEP 4
Inspect & clean catch basins and manholes upstream of the StormTech system.

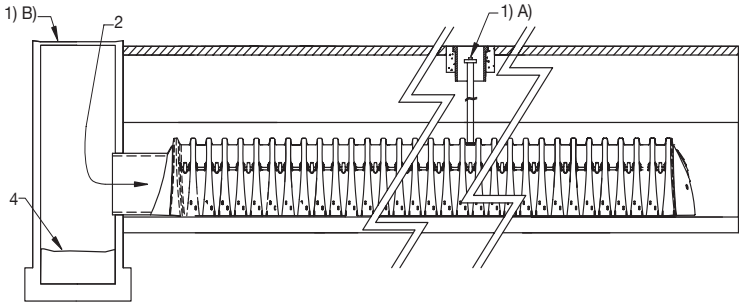

SAMPLE MAINTENANCE LOG

Date	Stadia Rod Readings		Sediment Depth (1)–(2)	Observations/Actions	Inspector
	Fixed point to chamber bottom (1)	Fixed point to top of sediment (2)			
3/15/11	6.3 ft	none		New installation. Fixed point is CI frame at grade	DJM
9/24/11		6.2	0.1 ft	Some grit felt	SM
6/20/13		5.8	0.5 ft	Mucky feel, debris visible in manhole and in Isolator Row, maintenance due	NV
7/7/13	6.3 ft		0	System jetted and vacuumed	DJM

ADS "Terms and Conditions of Sale" are available on the ADS website, www.ads-pipe.com
The ADS logo and the Green Stripe are registered trademarks of Advanced Drainage Systems, Inc.
Stormtech® and the Isolator® Row are registered trademarks of StormTech, Inc.
© 2017 Advanced Drainage Systems, Inc. #11011 03/17 CS

StormTech® Detention • Retention • Water Quality
A division of ADS

Advanced Drainage Systems, Inc.
4640 Trueman Blvd., Hilliard, OH 43026
1-800-821-6710 www.ads-pipe.com

Attachment H
Conditions of Approval

Attachment I
Class V Injection Well Registration

From: kerpel.judith@epa.gov
Sent: Tuesday, October 1, 2019 3:13 PM
To: Luis Prado
Subject: USEPA Region 9 iWells notification regarding: Panattoni 9th Street and Vineyard, Rancho Cucamonga, CA, 91730

Thank you for using the online injection well registration form. Below is a copy of data received. Please reply if the data was received or transcribed in error.
This notice authorizes only the planned discharges listed. Please update this registration when these wells are active to receive our authorization to inject uncontaminated water only.
Any change of use or ownership of the wells, or any new injection, requires notification to EPA. For more information, please see also the regulations beginning at 40 CFR 144.

-Facility
Panattoni 9th Street and Vineyard
9th Street and Vineyard Avenue
Rancho Cucamonga, CA 91730

GIS: 34.093639, -117.615184
Local Identifier: 0207-271-25, -27, -39, -40, -47, -48, -89, -93, -94, -96, and -97 UIC File ID: CA-20191001-JK-1956 Tribal Land: No
Ownership: Private - Business or other for-profits

-Contacts
---Contact Type: PRIMARY OWNER
Michael Sizemore
Panattoni Development Company, Inc.
20411 SW Birch Street, Suite 200
NEWPORT BEACH, CA 92660
MSizemore@panattoni.com
---Contact Type: Consultant
Luis Prado
Thienes Engineering, Inc.
luisp@thieneseng.com

-Comments
Stormwater infiltration galleries are authorized by rule 40 CFR 144. Infiltration galleries are considered Class V wells and pose a low threat to underground sources of drinking waters (USDWs).

-Well Summary
4 - Under Construction - 5D2 Stormwater Drainage - as of 10/01/2019

Attachment J
Activity Restrictions

Activity Restrictions

It is the responsibility of the owner to prohibit:

- Vehicle washing, maintenance or repair
- Hosing down paved areas
- Use of chemicals, pesticides, toxins, etc. on paved or landscape areas
- Dumping of any waste into drainage facilities
- Blowing or sweeping of debris (leaf litter, grass clippings, litter, etc.) into drainage facilities
- Discharge of fertilizer or pesticides to drainage facilities
- Keeping dumpsters lids open
- Washing kitchen wastes or kitchen equipment to storm water drainage features
- The owner will inform employees, contractors, etc. that spills are to be swept or vacuumed
- Connections of pool/spa drains to streets or storm drains
- Discharges of paint or masonry wastes to streets or storm drains