LBA Realty

14800 W. Schulte Road, Tracy, CA

Draft Water Source Assessment

Authored By: Glen Anderson, PE; Brett Crews (Schaaf & Wheeler)

December 10, 2020

Schaaf & Wheeler

CONSULTING CIVIL ENGINEERS

Table of Contents

Chapter 1. Introduction 1-1
1.1. Purpose 1-1
1.2. Proposed Development 1-1
1.3. Contact Information 1-1
Chapter 2. Description of Water System 2-1
2.1. Description of Water System 2-1
2.2. System Demands 2-1
2.3. Water System Components 2-2
2.3.1. Water Sources 2-2
2.3.2. Distribution System 2-4
2.3.3. Hydropneumatics Tanks 2-4
2.3.4. Treatment Systems 2-4
Chapter 3. Operations and Maintenance 3-1
3.1. Organization and Personnel 3-1
3.2. Bacteriological Quality Monitoring 3-1
3.3. Emergency Notification Plan 3-1
3.4. Treatment System 3-1

Appendices

- Appendix A: January 28, 2020 Operating Permit Amendment with Completed Attachments
- Appendix B: 14800 W Schulte Construction Drawings
- Appendix C: 14900 & 15000 W Schulte Construction Drawings
- Appendix D: 14800 W Schulte Well Completion Report, E-Logs, and Draw Down Testing
- Appendix E: Existing Wells Figure and Associated Reports
- Appendix F: 14800 W Schulte Manufacturer Submittals
- Appendix G: 14800 W Schulte Water Quality Testing
- Appendix H: Tracy Summary of Ground Water Conditions
- Appendix I: Drinking Water Source Assessment

Chapter 1. Introduction

1.1. Purpose

Schaaf & Wheeler Consulting Civil Engineers (S&W) was retained by LBA Realty/LBA Logistics (LBA) to provide design for water and wastewater systems for the proposed warehousing development located in Tracy, California. The following report outlines Water Source Assessment required in accordance with the San Joaquin Environmental Health Department (EHD) to amend the existing Schulte Rd. Warehouse 3, LLC Water System (System Number 3902181) to accommodate the addition of a domestic water supply source. The additional water source is a new well drilled at 14800 W. Schulte Road, Tracy, CA on August 6, 2020 (Permit Number WP0041001).

LBA owns the property at 14800, 14900, and 15000 W. Schulte Road in Tracy, California. 14900 and 15000 W. Schulte are existing facilities that share a parcel, 15000 W. Schulte located on the southern end of the property, and 14900 W. Schulte located on the northern of the property. The county has few records for the 15000 Facility. 14800 W. Schulte is the property directly to the east of the existing property and is the current property being developed.

This report describes the potable water system to serve the new buildings located at 14800 W. Schulte. It also servers to provide the EHD with information on the existing buildings and facilities. Due to the proximity to the existing buildings, the EHD is viewing the addition of the new water service as an amendment to the existing properties water system, rather than as a separate system, as assumed by the owner and reflected in earlier correspondence on this new development's permitting. See the attached January 28, 2020 letter with completed attachments from the EHD (Appendix A) describing the well operating permit amendment process.

1.2. Proposed Development

The proposed development includes three (3) warehouses with a total floor area of 677,290 square feet located on a 38.35-acre parcel that was previously a power plant. The project is in San Joaquin County (County) to the west of the City of Tracy and therefore is being developed in accordance with the County Standards. The warehouses and associated parking allow for a maximum of 540 employees. Many of the parking stalls are for large trucks for delivery and pick-up of products within the warehouse. The of flowing are included within the project: there are three allotted areas for leech field and expansion areas, one for each building; an area reserved for a new domestic well, fire well, fire storage tank, and fire pump; and areas for stormwater runoff and detention.

The project is located at 14800 W Schulte Road, Tracy, California APN 209-240-230. Ground elevations range from approximately 135 feet (Southwest) to 120 feet (Northeast), sloping down from the southwest to the northeast at 1.0%. The site is currently undeveloped. Demolition of the site was completed January 2020. The previous site had a power plant and small industrial shop. The County zoning is General Industry (I-G).

1.3. Contact Information

LBA RVI-Company XXXII, LLC is the owner and operator of the well located at 3347 Michelson Drive, Irvine, CA, 92612 and can be reached at (949) 664-2093 or (949) 757-2322.

Chapter 2. Description of Water System

2.1. Description of Water System

The new development includes three new warehouses with low water demand. Two new wells are being constructed to serve the project. There is a small domestic well, which will be the potable water supply to the new building and is the topic of this report, and a larger well to meet the requirements of filling the fire water supply tank. The fire system and the potable water system are not interconnected and are two separate water systems. There is, also, no connection between the existing building's domestic supply systems and the new domestic supply system. The developments fire system is being processed under a separate submittal to the County and San Joaquin Fire Authority. This report is for the potable water system for the new development. Appendix B is the Civil Site and Utility Plan for the project showing the new domestic water system.

The two existing warehouses on site, 14900 and 15000 W. Schulte Road, are located on the property to the west of the proposed development and are currently under served under the existing operating permit. The Water System has been classified by the County as a Non-Transient Non-Community Water System (NTNC). 15000 W. Schulte Road is a 300,000 square foot warehouse with 5 employees. The building's water and fire supply are from a well, tank and fire pump system located on the northwest corner of the building. It has an emergency connection to the neighbor to the east's fire system that is normally closed. There is no landscaping demand at the site. Water from the well is used only to flush toilets in the building. Bottled water service is provided to the employees. 14900 W Schulte road is a 480,000 square foot warehouse with a conservatively estimated 490 employees. The building has two wells, one for a small domestic well that is operated under this permit, and one larger fire water supply well. There is no interconnection between these two systems. As a part of the current development the fire systems will be connected for emergency purposes with a normally closed valve. The domestic well serves for potable water and irrigation. Appendix C is the approved Civil Site and Utility Plan. The well drillers report from the wells that serve the building are included in Appendix E.

2.2. System Demands

There are two system demand on the new potable well. The first is the demand is domestic use for the employees and the second is landscape irrigation.

Employee water consumption was calculated using a combination of the employee count and the 2019 California Plumbing Code (CPC) Appendix A "Recommended Rules for Sizing the Water Supply System" using water supply fixture units (WSFU) within the Warehouses. There are an estimated 540 employees in the three buildings combined, each generating a water demand of approximately 7.5 gallons per employee per day. The water use per employee reflects the minimal number of fixtures installed and the use of low flow fixture units within the building. This equates to a total average daily domestic water use of 4050 gallons per day (gpd) and an average of 7 gallons per minute (gpm). The peak hourly demand was determined using the CPC WSFU for the buildings. Between the three buildings there is a total of 121.5 WSFU. Using Chart A 103.1(2) in the CPC the approximate peak hour demand is 70 gpm.

Irrigation and landscaping water demands were calculated using the total area of landscaping on the site. There is a total of 264,638 square feet of assumed landscaping on site. The landscaping is anticipated to have

an annual water demand of 13.1 ac-ft per year, shown on the project's landscape plans, Appendix B. Irrigation demands will be higher in the warmer months than in the colder months.

Table 1 shows a summary of the estimated potable water demands for the new building. It is assumed all employee use will take place during a 10-hour period during the day and all irrigation will take place during an 8-hour period at night. It is not expected that the demands will occur at the same time.

Table 1 – Estimated Water Demands for the New Warehouses at LBA 14800 W Schulte Road

Demand	Average Daily Demand	Maximum Daily Demand	Average Demand	Peak Hourly Demand
Indoor	4,050 gpd	8,100 gpd	7 gpm	70 gpm
Irrigation	11,680 gpd	22,000 gpd	24 gpm	80 gpm

(a) Irrigation peaking factor- peak hour flows reflect the system meeting the max day demands in an 8-hour irrigation period, at night. Indoor use is assumed to peak during the day when the irrigation system is off. The indoor use period is assumed to be 10-hours.

The City of Tracy prepares an Urban Water Management Plan (UWMP) per state requirements every 5 years. The 2015 UWMP identifies groundwater as 30% of the City's current water supply. It is the only source deemed 100% reliable in all water year types.

Tracy has increased the monitoring of the groundwater basins in response to the Sustainable Groundwater Management Act. Due to reduced reliance on groundwater for drinking water by the City, the groundwater levels have been rising for a decade. In 2014, a Water Supply Assessment was completed for the Ellis development and stated there is nearly 423.6 billion gallons of groundwater basin below the City wells.

The City completes regular evaluations of the groundwater conditions in the area. The 2013 Summary of Groundwater Conditions is included as Appendix H. At the time of the report, 2013, the City of Tracy was drawing less than a quarter of the recommended 8,000 acre-ft per year.

The Pump Supplier, Howk Systems, completed preliminary draw down testing in September 2020 at both the Domestic Well and the Fire Well to size the pumps. During the tests, the Static Water Level was found to be 164 feet below ground surface. The yield from each well was more than sufficient to supply the demands for the project. At a constant flow rate of 132 GPM the pumping water level (PWL) is 201 feet below the ground surface. This PWL is approximately 115 feet above the first screen and pump. As such, the well design will permit additional fluctuations in the groundwater table without impacting capacity. The preliminary draw down testing data is attached as Appendix D. Draw down testing as required by the EHD will completed once the pumps are installed and the detention basins are developed.

Based on the current information available, the new project potable well produces sufficient water to supply the demands of the new development.

2.3. Water System Components

The water system at the new development is composed of the new potable water well and pump, two hydropneumatics tanks, the site piping, and 5 building connections. See Appendix B for the site utility plan and layout of the system. See Appendix F for the manufacturer submittals for the well components, pump and motor, piping, hydropneumatics tank, and appurtenances.

2.3.1. Water Sources

The new well drilled on August 6, 2020 is the only water source being amended into the existing operating permit. A test hole was drilled on June 25, 2020 to a depth of 700 feet in the location of the domestic well. The Drillers E-Log is included in Appendix D. The completed well was designed to draw water from the same aquifer as the well directly to the west because extensive water quality testing was complete as a part of developing the 14900 W. Schulte Project and it was determined to be a suitable aquifer. This aquifer is between 365 and 375 feet below ground surface. Preliminary water quality testing of the test hole was completed July 8, 2020 by BSK Associates and is attached as Appendix G. Final water quality results will be completed as required by the EHD and submitted with the final report. Table 2 includes a summary of the water quality results.

Table 2 – Summary of Domestic Well Aquifer Water Quality Results

Contaminant	Test Drilling Data	Well Data (Post Well Construction)	Standard (Allowable)
Total Dissolved Solids	1,000	Not Available	500 to 1,000[s]
Sulfate (mg/l)	320	Not Available	250[s]
Chromium (ug/l)	16	Not Available	50
Nitrate (mg/l)	5.8	Not Available	10
Lead (ug/l)	ND	Not Available	15
Selenium (ug/l)	7.3	Not Available	50
Iron (ug/l)	30	Not Available	300[s]
Manganese	43	Not Available	50[s]

s – Secondary drinking water standard (not applicable)

ND – Non detectable

NA – Not applicable

The potable water well was completed August 6, 2020, in accordance with EHD permits, recommendations, and approval. The well for this project was designed to draw from the same aquifer as the well on the 14900 project site. To preclude water from other zones, a cement sanitary seal was installed to a depth of 200 feet. Filter pack was installed from 200 to 390 feet below ground. The fire well includes a sanitary seal extending down past the depth of the domestic well to eliminate cross contamination into the potable zone. This well draws from deeper water bearing zones. The well completion reports for both wells is included in Appendix D.

The well was drilled to a depth of 390 feet with an 18” borehole. Screens were installed between 320 to 335 feet and 370 to 385 feet below ground surface. Well screen material sections included metals resistant to corrosion from the local water as it has high salinity. ASTM 604 Type 4 Corrosion resistant high strength low-alloy steel was used for blank sections and spiral weld stainless steel was used in screened sections. Screens were designed to limit the sediment allowed through will maintain low velocity. “Ful-Flow” louvered screens with perforations of 0.06” were used for the project.

The casing was surrounded with an 8x16 annular gravel pack envelope. The well borehole diameter was 18”, allowing for 5 inches of gravel pack around the well screens.

A 10-sack cement slurry seal (sanitary seal) was placed between the conductor and well casing above a sand layer resting on top of the gravel pack, per state and specifications requirements. The seal ranged from ground level to the sand layer at approximately 200 feet below ground surface. The cement was pumped into the bore

hole through a tremie pipe within five feet of the bottom of the hole and raised as cement was added so as not to submerge the pipe end in the seal. The was left undisturbed for a minimum of 24 hours following the pouring.

2.3.2. Distribution System

The distribution system will be constructed of piping consisting of a 4-inch diameter main and 3-inch diameter laterals to each building. Buildings A and B each have two connections each and Building C has one connection. The irrigation water is connected to the domestic system through a backflow prevention assembly just after the hydropneumatics tanks, within the utility yard. The distribution system does not connect to any other water sources or other distribution systems.

2.3.3. Hydropneumatics Tanks

There are two hydropneumatics that serve as cycling storage to minimize the pump starts per hour. Wessels Company FXA-1000-WG tanks will be installed with a cumulative total volume of approximately 530 gallons. The system will be set to operate between 40 and 75 psi at the hydropneumatics tanks to ensure adequate pressure is provided within the system.

2.3.4. Treatment Systems

Currently, no treatment system is anticipated to be required.

Chapter 3. Operations and Maintenance

3.1. Organization and Personnel

The following organizations and personnel are responsible for the operations and maintenance of the Schulte Road Warehouse 3, LLC SPWS.

Responsibility	Company	Address	Phone	Alternate Phone
Owner/Operator	LBA RVI-Company XXXII, LLC	3347 Michelson Dr, Irvine, CA 92612	(949) 664-2093	(949) 664-2093
Water Testing	Quality Services	NA	(209) 838-7842	(415) 710-6211 [Contact at LBA]

3.2. Bacteriological Quality Monitoring

The monitoring program will be as outlined in the Sampling Site Plan included in Appendix A. Quality Services will conduct the testing as required. If quality issues are encounter the emergency notification plan outlined below and included in Appendix A will be followed.

3.3. Emergency Notification Plan

The Water Quality Emergency Notification Plan form has been completed and is included in Appendix A. The Notification Plan is the Standard Plan as defined by the EHD. The owners of the water system will notify customers by door-to-door contact or written handout sheets. See Appendix A for the primary contacts in charge of the Emergency Notification Plan.

3.4. Treatment System

Currently, no treatment system is anticipated to be required.

APPENDIX A
San Joaquin EHD Well Operating Permit Amendment Letter

SAN JOAQUIN COUNTY
Greatness grows here.

Environmental Health Department
Kasey Foley, REHS, Interim Director

PROGRAM COORDINATORS
Robert McClellon, REHS
Jeff Carruesco, REHS, RDI
Willy Ng, REHS
Muniappa Naidu, REHS
Michael Kith, REHS
Melissa Nissim, REHS

January 28, 2020

C/O LBA Realty
Schulte Rd. Warehouse 3, LLC Water System
160 W Santa Clara St. #950
San Jose, CA 95113

Subject: **Schulte Rd. Warehouse 3, LLC Water System**
14800 W. Schulte Rd., Tracy , CA 95377

The San Joaquin County Environmental Health Department (EHD) has been informed that a new well has been constructed on the above-mentioned property that is a **Non Transient-Non Community Water System (NTNC).** The addition of Well #3 as a source requires the Schulte Rd. Warehouse 3, LLC Water System operating permit be amended to include this new well. To proceed with applying for an amended Permit to operate public water system[1] with this new source, complete the enclosed forms and return them to this office with the required permitting fees, as detailed below:

1. Complete the Public Water Supply Permit Amendment Application form (Attachment 1).
2. Submit a check in the amount of **$456** for a permit amendment fee to operate a **NTNC** with a new connection. Please make the check payable to EHD.
3. Complete and sign the Service Request forms (Attachment 2).
4. Submit a Source Water Assessment Plan for the new source.
5. The Schulte Rd. Warehouse 3, LLC Water System must submit the following information to the EHD in order to demonstrate that the well meets the standards of the California Code of Regulations Water Works Standards, the Safe Drinking Water Act, and requirements of San Joaquin County Well Standards as a **NTNC** source. The well water shall be sampled and tested for the following water quality tests to ensure the source meets California Safe Drinking Water Standards. A state certified laboratory personnel at a state approved laboratory facility shall do the sampling and testing. Instruct the laboratory to label these samples as 3, 3902181-003, and obtain them from the wellhead:

    a. Secondary (aesthetics): *Bicarbonate-00440, Carbonate-00445, and Hydroxide alkalinity-71830, Calcium-00916, Iron-01045, Magnesium-00927, Manganese-01055, pH-00403, Sodium-00929, Specific conductance-00095, Odor-00086, Color-00081, Turbidity-82079, Sulfate-00945, Total filterable residue TDS-70300, Chlorides-00940, Thiobencarb-A-001, Zinc-01092, Foaming Agents (MBAS)-38260, Silver-01077, Copper-01042, and Total hardness-00900, MtBE-46491* are **due at least once** (California Code of Regulations (CCR), Title 22, Section 64449).

    b. Inorganic chemicals plus perchlorate: *Aluminum-01105, Antimony-01097, Arsenic-01002, Barium-01007, Beryllium-01012, Cadmium-01027, Chromium total-01034, Chromium VI-01032, Fluoride-00951, Mercury-71900, Nickel-01067, Perchlorate-A-031, Selenium-01147, Thallium-01059 are due*

[1] Any person who operates a public water system without a permit issued by the department (aka EHD) pursuant to this chapter may be liable, as determined by the court, for a civil penalty not to exceed twenty-five thousand dollars ($25,000) for each separate violation or, for continuing violations, for each day that violation continues (Health and Safety Code Section 116725 (d)).

once every three years (CCR, Title 22, Section 64432 (b)(1)). This Department currently waives asbestos and cyanide. If a perchlorate sample result exceeds the Detection Limit, then additional monitoring may be required.

c. Nitrates (as N)-00618: Required **annually**. If the result is greater than one half of the Maximum Contaminant Level (MCL) of 10 mg/L, than quarterly monitoring will be required. Results above the MCL must be confirmed by a second result collected and EHD notified of the result in 24 hours. (CCR, Title 22, Section 64432 (a)).

d. Nitrites-00620: Required once **every three years.** If result is greater than one half of the MCL, than quarterly monitoring will be required. Results above the MCL must be confirmed by a second result collected and EHD notified of the result in 24 hours. (CCR, Title 22, Section 64432 (a)).

e. Volatile Organic Compounds (VOCs): Required once every **6 years** if results are below the Detection Limit**. Quarterly** sampling for one year is required if confirmed by a second result above the Detection Limit of: *Benzene-34030, Carbon Tetrachloride-32102, 1,2-Dichlorobenzene-34536, 1,4-Dichlorobenzene-34571, 1,2-Dichloroethane-34531, Dichloromethane-34423, 1,2-Dichloropropane-34541, 1,3-Dichloropropene-34561, Ethylbenzene-34371, Methyl-tert-butyl-ether-46491, Monochlorobenzene-34301, Styrene-77128, 1,1,2,2-Tetrachloroethane-34516, Toluene-34010, 1,2,4-Trichlorobenzene-34551, 1,1,2-Trichloroethane-34511, Trichlorofluoromethane-34488, 1,1,2-Trichloro-1,2,2-Trifluoroethane-81611, Xylenes-81551, 1,1-Dichloroethane*-34496, 1,1-Dichloroethylene*-34501, cis-1,2-Dichloroethylene*-77093, trans-1,2-Dichloroethylene*-34546, 1,1,1-Trichloroethane*-34506, Tetrachloroethylene*-34475, Trichloroethylene*-39180, and Vinyl Chloride**-39175..* (If any * result is above the Detection Limit, then **quarterly** sampling will be required for Vinyl Chloride). (CCR, Title 22, Section 64445 and 64445.1).

f. Synthetic Organic Compounds (SOCs): Required once every **three years** for *Dibromochloropropane (DBCP)-38761 and Ethylene Dibromide (EDB)-77651* (CCR, Title 22, Section 64445.1). This Department currently waives SOCs except for **DBCP and EDB**. If a result is above the Detection Limit, then **quarterly** sampling will be required. Monitoring required quarterly for one year for ***1,2,3-Trichloropropane****-77443.* Monitoring frequency for **1,2,3-TCP** will be updated once all initial monitoring period results are received.

g. Radiological: Required **quarterly** for one year for *Gross Alpha-01501 (GA)*. If the results are all below the Detection Limit, than sampling will be waived to once a year every **nine years**. If a sample result exceeds the Detection Limit, then additional monitoring may be required for *GA, Uranium-28012, and combined Radium 226 and 228 EPA 903.0-A-080.* (CCR, Title 22, Section 64442).

h. Bacteriological: This Department will require at least **two** consecutive bacteriological samples collected from the **well head** that are Total Coliform Absent and Fecal Absent. The tests shall be taken and reported within a seven-day period and in no case be completed more than twenty-eight (28) days prior to use of the well. The water samples collected for the presence of bacteria shall be tested for chlorine residuals. The chlorine residual levels shall be recorded on the bacteriological lab results. The chlorine residual shall be less than **0.05 ppm** for the bacteriological result to be accepted.

Routine bacteriological samples will then be required **once each calendar month** from the distribution system at the **Routine** sample site, per the Sample Site Plan.

The water from the new Well #3 may **not** be placed into the drinking water distribution system and served to the users of the water system, until all water sample results from tests "a-h" have been submitted and found to meet drinking water standards by EHD. *Use of this well as a drinking water source before gaining EHD approval may result in further legal action and fees.*

6. Any water well that will become a source for the water system shall comply with the public well construction and well specifications of the San Joaquin County (SJC) Well Standards, the State of California Water Well Standards, and the California Code of Regulations Water Works Standards, with regards to:

a. the well casing shall terminate at least 18 inches above surface grade and meets the SJC Public Works Flood Control requirements, if located within the 100 year flood plain or flood way,

b. the wellhead shall have a properly installed check valve, sample tap, pressure relief valve, and well casing vent that is down turned and screened to excluded rain water, insects and debris,

c. the sample tap for the well shall be a non-threaded, down-turned sampling tap located on the discharge line between the wellhead and the check valve. Sampling taps used for obtaining samples for bacteriological analysis shall not have a screen, aerator, or like feature,

d. wellhead and electrical controls are not installed in vaults,

e. installation of a surface cement pad poured at least two feet from the casing, that slopes away from the casing in all directions, that is at least four inches thick, and poured contiguous with the annular seal,

f. installation of a totalizing flow meter located downstream of each well and before the entry point to the distribution system. The total monthly water production shall be recorded and the records made available for review by the EHD,

g. the well, pressure tank, treatment system, and components of the water system shall be constructed with NSF approved components and shall be secured from unauthorized access in a way that the components are ready available to staff for maintenance, removal, and operation of the system.

h. the well shall be equipped with fittings and electrical connections to enable chlorination facilities to be readily installed for emergency disinfections,

i. provisions are made to allow the well to be pumped to waste with a waste discharge line that is protected against backflow.

7. Provide data that demonstrates the existing source can adequately provide the Water System **Maximum Day Demand** and **Peak Hourly Demand** requirements for quality and quantity of water according to the California Code of Regulations Water Works Standards (pump tests, meter readings, etc.) (Attachment 3).

8. An appropriate back-flow prevention assembly shall be installed on the non-domestic use water line(s) to prevent cross connections between the potable water supply and hazardous chemicals or non-potable water sources (such as irrigation lines, power washers, boilers, booster pumps, chemical injection points, retention ponds, sewer systems, and like sources of contaminants). All testable back-flow devices shall be tested by a certified tester upon installation, upon being repaired, and once each year. The test reports shall be made available for review by the EHD.

   The EHD strongly encourages water line(s) for domestic use (i.e. hand washing, toilets, showers, break rooms, drinking faucets, food preparation sinks, emergency wash sinks/showers and the like.) be separated at the well from the water line(s) that will supply industrial, irrigation, or fire suppression uses. An appropriate back-flow prevention assembly shall be installed on the non-domestic use water line(s). The separation of these lines close to the well will reduce the number of required backflow prevention assemblies.

9. Submit the driller's well log and a technical report (see enclosure) as required by the Health and Safety (H&S) Code, Section 116530.

10. Complete the enclosed Sample Siting Plan that indicates the locations for the specified certified laboratory to collect the monthly **Routine** and **Repeat** bacteriological samples from the water system. Contact the EHD for assistance with this plan (Attachment 4).

11. Complete the enclosed Emergency Notification Plan.

12. Provide a schematic of the property showing the locations of the well(s), pressure tank, existing and proposed water lines (i.e. irrigation, fire, and domestic), septic system and 100% replacement septic area of neighboring properties, potential sources of contamination and the distances between any

source of contamination and the well and all existing and proposed drinking water distribution lines. The schematic must demonstrate the proposed water lines are installed to meet the set-back requirements of the Water Works Standards, as follows:

a. Newly installed water mains and supply lines shall not be installed in the same trench as any parallel pipeline conveying untreated sewage, primary or secondary treated sewage, disinfected recycled water, and hazardous fluids.

b. Newly installed water lines placed in a trench shall be at least ten feet from and at least one foot above any trenched sewer pipeline or like conveyance.

c. New water mains shall not be installed within 100 horizontal feet of the nearest edge of any sanitary landfill, wastewater disposal pond, or hazardous waste disposal site, or within 25 horizontal feet of the nearest edge of any cesspool, septic tank, sewage leach field, seepage pit, underground hazardous material storage tank, or groundwater recharge project well.

13. Submit the manufacturer's specification sheets for all proposing equipment and piping. The well, pressure tank, treatment system, and components of the water system shall be constructed with NSF approved components and shall be secured from unauthorized access in a way that the components are ready available to staff for maintenance, removal, and operation of the system.

14. An appropriate back-flow prevention assembly shall be installed on the non-domestic use water line(s) to prevent cross connections between the potable water supply and hazardous chemicals or non-potable water sources (such as irrigation lines, power washers, boilers, booster pumps, chemical injection points, retention ponds, sewer systems, and like sources of contaminants). All testable back-flow devices shall be tested by a certified tester upon installation, upon being repaired, and once each year. The test reports shall be made available for review by the EHD.

    The EHD strongly encourages water line(s) for domestic use (i.e. hand washing, toilets, showers, break rooms, drinking faucets, food preparation sinks, emergency wash sinks/showers and the like.) be separated at the well from the water line(s) that will supply industrial, irrigation, or fire suppression uses. An appropriate back-flow prevention assembly shall be installed on the non-domestic use water line(s). The separation of these lines close to the well will reduce the number of required backflow prevention assemblies.

Final approval for the permit amendment will require an inspection of the water system by the EHD. Please contact Navjot Sahota (nsahota@sjgov.org) at (209) 468-3178 to schedule an inspection, or if you have any questions.

Robert McClellon, Program Coordinator, REHS
San Joaquin County Environmental Health Department

STATE OF CALIFORNIA
APPLICATION
FOR
DOMESTIC WATER SUPPLY PERMIT AMENDMENT FORM

Applicant: LBA RVI-COMPANY XXXII, LLC
(Enter the name of legal owner, person(s) or organization)

Address: 14800 W. Schulte Road, Tracy CA 95377

System Name: Schulte Rd. Warehouse 3, LLC Water System

System Number: 3902181

TO: San Joaquin County Environmental Health Department
1868 Hazelton Ave
Stockton, CA 95205

Pursuant and subject to the requirements of the California Health and Safety Code, Division 104, Part 12, Chapter 4 (California Safe Drinking Water Act), Article 7, Section 116550, relating to changes requiring an amended permit, application is hereby made to amend an existing water supply permit to add a new source, Well #3 (14800 Schulte)

Applicant must state specifically what is being applied for - whether to construct new works, make alterations or additions in works or sources, or change or modify treatment.)

FOR OFFICIAL USE

Date Received:

I (We) declare under penalty of perjury that the statements on this application and on the accompanying attachments are correct to my (our) knowledge and that I (we) are acting under authority and direction of the responsible legal entity under whose name this application is made.

Signed By:

Title: VP, Industrial Development

Address: 3347 Michelson Drive, Suite 200 Irvine, CA 92612

Telephone: 949-664-2093

Date: 11/10/2020

SAN JOAQUIN COUNTY ENVIRONMENTAL HEALTH DEPARTMENT
SERVICE REQUEST

Type of Business or Property	FACILITY ID:	SERVICE REQUEST #
SPWS	FA0020019	

OWNER / OPERATOR: LBA RVI-COMPANY XXXII, LLC — CHECK if BILLING ADDRESS [X]

FACILITY NAME: SCHULTE RD. WAREHOUSE 3, LLC WATER SYSTEM

SITE ADDRESS					
14800	West	Schulte Road		Tracy	95377
Street Number	Direction	Street Name		City	Zip Code

HOME or MAILING ADDRESS (If Different from Site Address)		
3347	Michelson	
Street Number	Street Name	

CITY: Irvine — STATE: CA — ZIP: 92612

PHONE #1	EXT.	APN #	LAND USE APPLICATION #
(949) 664-2093		209-240-230-000	

PHONE #2	EXT.	BOS DISTRICT	LOCATION CODE
(949) 757-2322			

CONTRACTOR / SERVICE REQUESTOR

REQUESTOR — CHECK if BILLING ADDRESS [ ]

BUSINESS NAME	PHONE # ( ) EXT.
HOME or MAILING ADDRESS	FAX # ( )
CITY	STATE ZIP

BILLING ACKNOWLEDGEMENT: **I**, the undersigned **property** or **business owner, operator** or **authorized agent of same,** acknowledge that all site and/or project specific ENVIRONMENTAL HEALTH DEPARTMENT hourly charges associated with this project or activity will be billed to **me** or **my business** as identified on this form.

I also certify that I have prepared this application and that the work to be performed will be done in accordance with all SAN JOAQUIN COUNTY *Ordinance Codes*, *Standards*, STATE and FEDERAL laws.

APPLICANT'S SIGNATURE: [signature] EMILY MANDRUP — DATE: 11-22-20

PROPERTY / BUSINESS OWNER ☐ OPERATOR / MANAGER ☐ OTHER AUTHORIZED AGENT ☐ UP. INDUSTRIAL DEVELOPMENT

If APPLICANT is not the BILLING PARTY, proof of authorization to sign is required — *Title*

AUTHORIZATION TO RELEASE INFORMATION: When applicable, **I**, the **owner** or **operator** of the **property** located at the above **site address**, hereby authorize the release of any and all results, geotechnical data and/or environmental/site assessment information to the SAN JOAQUIN COUNTY ENVIRONMENTAL HEALTH DEPARTMENT as soon as it is available and at the same time it is provided to me or my representative.

TYPE OF SERVICE REQUESTED:	PERMIT AMENDMENT TO ADD A SOURCE	
COMMENTS:		
ACCEPTED BY:	EMPLOYEE #:	DATE:
ASSIGNED TO:	EMPLOYEE #:	DATE:
Date Service Completed (if already completed):	SERVICE CODE: 523	P / E: 4604
Fee Amount: $456.00	Amount Paid	Payment Date
Payment Type	Invoice #	Check # / Received By:

SAN JOAQUIN COUNTY
ENVIRONMENTAL HEALTH DEPARTMENT (EHD)
Small Public Water Systems

Source Capacity Test
&
Maximum Day Demand, and Peak Hourly Demand Water Study

Purpose: All wells that are proposed to become a source for a Small Public Water System (SPWS) shall undergo a source capacity test to demonstrate to the EHD the well is capable of producing an adequate supply of water that meets or exceeds the Maximum Day Demand (MDD) and Peak Hourly Demand (PHD) water usage of the water system. The results of the capacity test are to be submitted to the EHD, as part of the permit application to apply for or amend a SPWS permit. This form may be used by the SPWS as a worksheet and submitted to the EHD as part of the permit application submittal.

The requirements for conducting a source capacity test and for determining the MDD and PHD are found in the California Code of Regulations, Title 22, Chapter 15, March 2008, revised Water Works Standards.

Procedures for a **Source Capacity Test** are described as follows:

1. **Submit** to the EHD the name and the qualifications of the individual that will perform the capacity test and description of test methods at least 48 hours before the test is conducted.

2. **Installation** of a water meter that is capable of totalizing metered flows to record the number gallons of water the well produces per minute shall be completed before the test is started. The water meter shall be properly installed, per the manufacture's specifications, that is located up stream of the distribution system and waste discharge line. The water meter may have an installation requirement of uninterrupted flows up and down stream of the meter to operate properly. A few meters are designed to work with zero up and down uninterrupted distances.

3. **Methods** to measure static water levels, draw down water levels and recovery water levels of the well:
   a) A well that is constructed with a sounding tube or large diameter air vent is capable of having the water depth level measured by using a sounder. The device can be lowered into the well through these access ports to measure the depth to water;

   -or-

   b) for small diameter wells or wells that are not constructed with a sounding tube, an air tube water level sensor monitoring device that is left in the well during the capacity test can be used. The water depth is manifested as pressure. The pressure readings can be recorded on a pressure recording device to capture the static water level, the draw down water levels during the capacity test, and recovered water level after the test. This air tube water level sensor monitoring device consists of ¼ inch tubing that can fit into the ¾ inch chlorine access plug, present at the wellhead seal.

   NA

4. To serve water to the system, while conducting the capacity test:

   a) Install a clay-valve or other pressure relief valve on the discharge line located before distribution and down stream of the meter. The valve shall be capable of maintaining normal system pressures and allow excess water to discharge to waste during the test. This valve will allow water to discharge to waste that exceeds the system's demand, thus maintaining system pressures during the test.

   NA

   b) To measure static water levels, draw down water levels and recovery water levels of the well, begin recording the pressure readings after the well has been inactive for the longest period (i.e 2 am) before the day of the capacity test and until the same time of the day (ie 2 am), following day after the test.

SAN JOAQUIN COUNTY

ENVIRONMENTAL HEALTH DEPARTMENT (EHD)

SOURCE CAPACITY TEST IN ALLUVIAL SOILS*

Small Public Water System(SPWS) General Information

SPWS Name: Schulte Rd. Warehouse 3, LLC Water System Telephone #: 949.664.2093

SPWS Site address: 14800 W Schulte Rd. Tracy, CA e-mail address KLedbetter@lbarealty.com

Mailing address: 3347 Michaelson. Irvine, CA Property Owner's Name: LBA Fund VI-MM Industrial, LLC

Contact name: Kathleen Ledbetter Telephone #: 949.664.2093 e-mail address: KLedbetter@lbarealty.com

Submit the following information to EHD **48 hours before** the **Source Capacity Test** is performed: Date Submitted_____

Schematic of well site that depicts the locations of: the wellhead, well discharge line, waste discharge line, water meter, distribution line, clay-valve, collection site for waste discharge, pressure tank, locations of other wells and surface water located within 1000 foot radius.

Description of test methods for:

- collecting water levels measurements
- water level measurement schedule
- management and collection site of discharged test water
- maintaining a constant pumping rate throughout test

Name of Tester: _____

Qualifications of Tester: _____

Well information:

Capacity Test for Well ID: _____ Date Drilled: _____ Well Depth_____ PS No._____

Date and Time of Proposed Capacity Test_____

Pump HP: _____ Pump Depth: _____feet below surface grade (bsg) Pump rate _____gallons per minute (gpm)

_____

Date of Capacity Test_____

Static Water Level: _____bsg at _____(time)

Capacity Test: Record water draw down levels and GPM of well at least once each hour for at least **8-hours,** while pumping to waste:

1) Water level _____bsg at _____(time) GPM:_____
2) Water level _____bsg at _____(time) GPM:_____
3) Water level _____bsg at _____(time) GPM:_____
4) Water level _____bsg at _____(time) GPM:_____
5) Water level _____**bsg** at _____(time) GPM:_____
6) Water level _____**bsg** at _____(time) GPM:_____
7) Water level _____**bsg** at _____(time) GPM:_____
8) Water level _____**bsg** at _____(time) GPM:_____

Discontinue pumping after 8-hours, if last four hours have same **bsg** water level, and begin **Recovery Test**

Continue capacity test, until last **four** hours have same **bsg** water level

9) Water level _____bsg at _____(time) GPM:_____
10) Water level _____bsg at _____(time) GPM:_____
11) Water level _____bsg at _____(time) GPM:_____
12) Water level _____bsg at _____(time) GPM:_____

Recovery Test: Record recovery water levels in the well beginning **15 minutes after** the pump stopped pumping for the capacity test and every 15 minutes there after for **2 hours**, then **every hour** for **4 hours**.

1) Water level _____bsg at _____(time) 15 minutes, after capacity test & pump is off
2) Water level _____bsg at _____(time) 15 minutes, later
3) Water level _____bsg at _____(time) 15 minutes, later
4) Water level _____bsg at _____(time) 15 minutes, later
5) Water level _____bsg at _____(time) 15 minutes, later
6) Water level _____bsg at _____(time) 15 minutes, later
7) Water level _____bsg at _____(time) 15 minutes, later
8) Water level _____bsg at _____(time) 15 minutes, later
9) Water level _____bsg at _____(time) 1hour, later
10) Water level _____bsg at _____(time) 1hour, later
11) Water level _____bsg at _____(time) 1hour, later
12) Water level _____bsg at _____(time) 1hour, later

*San Joaquin County soils are mostly of alluvial origins. Capacity Test Procedures for testing sources constructed in alluvial soils are found in the Section 64554, *New and Existing Source Capacity,* Water Works Standards, Chapter 16 of Title 22(T22), of the California Code of Regulations.

SAN JOAQUIN COUNTY
ENVIRONMENTAL HEALTH DEPARTMENT (EHD)
Small Public Water Systems
MAXIMUM DAY DEMAND AND PEAK HOURLY DEMAND WATER STUDY

Small Public Water System(SPWS) General Information
SPWS Name: Schulte Rd. Warehouse 3, LLC Water System Telephone #: 949.664.2093
SPWS Site address: 14800 W Schulte Rd. Tracy, CA e-mail address KLedbetter@lbarealty.com
Mailing address: 3347 Michaelson. Irvine, CA Property Owner's Name: LBA Fund VI-MM Industrial, LLC
Contact name: Kathleen Ledbetter Telephone #: 949.664.2093 e-mail address: KLedbetter@lbarealty.com

List all onsite water well(s) by use(s). A well may be listed for more than one use. Note "NA", if a use does not apply at your site. (If another source supplies a water use, i.e. Delta, canal, water utility, list that source).
Drinking/ hand washing/ toilet flushing SPWS Wells: Well ID: XX
Emergency/Standby SPWS Wells: NA Fire Suppression Wells: Well ID: XX
Industrial Wells: NA Irrigation Wells: NA

Customers served by the SPWS:
Number of homes served NA to a population of NA year-round residents.
Number of homes served NA to a population of NA seasonal residents (at least 6 to <12 months stay).
Number of customers NA a day on peak days. Number of days a year with > 25 customers/day NA.
Number of employees at peak season xx / xx / xx per shift each day. Number of peak season days xxx each year.
Number of days 365 a year with at least 25 employees, customers, tenants or students.

If the site has on-site water storage tanks (does not include hydropneumatic or bladder tanks), note capacity of the tanks per use. Fire 487,000 gallons Drinking NA gallons Industrial NA gallons Other NA gallons

Maximum Day Demand (MDD) and Peak Hourly Demand PHD) information.

Water Meter Readings

NA

If the well is metered, what is the highest water meter reading of the last ten years of operation: _____gallons per day/month/year (circle one) Submit to EHD a copy of the recorded water meter readings. The water meter reading is of: potable, industrial, irrigation, and fire water usage (circle all that applies).

Use this water meter reading to estimate the MDD and PHD for the water system*, as follows:

MDD = _____ (highest gallons per day in recent ten years x 1.5) **PHD =** _____ (MDD/ 24 hours x 1.5)

For Systems that Do Not Have Water Meter Readings

NA

Metered readings of a similar system may be used to calculate the MMD and PHD. Submit to EHD a copy of the water utility records with the address and name of the facility that is similar to this system (as defined in Section 64554 (b)(4)).

Use the highest water meter reading of a similar system to estimate the MDD and PHD for the water system*, as follows:

MDD = _____ (highest gallons per day in recent ten years x 1.5) **PHD =** _____ (MDD/ 24 hours x 1.5)

Or:

A study based on fixture units & water demand may be used to calculate the MMD and PHD, if meter readings are **not** available of a similar system. Fill out and submit the EHD **Fixture Units & Water Demand Study** chart according to the California Plumbing Code (CPC)2 Title 24 Part 5, Section 610.3 and Appendix A, Table A-2 and Chart A-3.

_____

SAN JOAQUIN COUNTY

ENVIRONMENTAL HEALTH DEPARTMENT (EHD)

Small Public Water Systems

FIXTURE UNITS & WATER DEMAND STUDY

Small Public Water System(SPWS) General Information

SPWS Name: Schulte Rd. Warehouse 3, LLC Water System Telephone 949.664.2093

SPWS Site address: 14800 W Schulte Rd. Tracy, CA e-mail address KLedbetter@lbarealty.com

Mailing address: 3347 Michaelson. Irvine, CA Property Owner's Name: LBA Fund VI-MM Industrial, LLC

Contact name: Kathleen Ledbetter Telephone #: 949.664.2093 e-mail address: KLedbetter@lbarealty.com

Fixture	# of fixtures	Units (Table A-2)	Fixture	# of fixtures	Units (Table A-2)
Wash Basins/Sinks	18	18	Flush Valve Urinals	6	12
Bath and/or showers	0		Hose connections		
Tank toilets	0		Clothes washers		
Low flow toilets	15	45	Dishwashers		
Flush valve toilets	0		Drinking fountains	6	3
Other: Kitchen Sink	3	4.5	Ice maker		
Other: Utility Sink	3	9	Other:		
Other:			Other:		
Other:			Other:		
Other:			Other:		

(Utilizing Table A-2 of the **California Plumbing Code (CPC)3** Title 24 Part 5, Section 610.3 and Appendix A, **Table A-2** and **Chart A-3.)**

Total Fixture Units 91.5

Total demand of all fixture units 65 **gpm** (Utilizing Chart A-3, Appendix A in CPC).

Additional Water Demands of the Water System's Well/Source:

Industrial water uses: Provide a list of equipment and water demand (gpm) per the manufacturer's specifications (i.e. Reverse Osmosis/ water softener treated water and waste stream volume, produce or equipment wash down, pressure washing, water softener backwash):

Equipment	GPM	Equipment	GPM
NA			

Irrigation Uses:

# Sprinkler heads	GPM	Minutes/day	# Sprinkler heads	GPM	Minutes/day

Total Irrigation GPM is 32 gpm **for** 360 **minutes per day**

What time of day will irrigation occur? Night Is this during the facility's operating hours? (Yes/No)

Fire Flows determined by Fire District: 2,000 **GPM for** 120 **minutes.**

(note "Not Applicable", if fire flows are not required or a different well/source provides the flows)

Fire protect is provided by: Separate Fire Well **(Fire District/well/source).**

Estimated increase in water demand over the next ten years: NA gpm or NA percentage.

Total Water Demand of the Water System 95 gpm **gpm** **Well/Source Capacity is:** 100 **gpm**

(including total fixtures, industrial uses, fire protection uses, and irrigation use)

SAN JOAQUIN COUNTY
Greatness grows here.

Environmental Health Department

14800 W. Schulte Road

SAMPLE SITING PLAN
SAN JOAQUIN COUNTY ENVIRONMENTAL HEALTH DEPARTMENT

Schulte Rd. Warehouse — 3902181
Name of Small Public Water System (SPWS) — PS Code

LBA RV-Company, LLC
Owner(s)

5 (Bldg A-2 / Bldg B-2 / Bldg C-1) — 540 Employees
Number of service connections — Number of customers

Fruit Grower's Laboratory / Quality Service, Inc. /
Name of Certified Laboratory — Name of Sampler (If not Laboratory) — Certified by

Name(s) and Phone Number(s) of Person(s) Laboratory are to Contact Following Any Positive Sample in order of 1st/2nd/3rd choice:

Lisa DuBose	(415)710-6211 /		ldubose@lbarealty.com
SPWS Contact (1st/ 2nd/ 3rd)	Day	Night/Cell	Email
	/		
SPWS Contact (1st/ 2nd/ 3rd)	Day	Night/Cell	Email
Quality Service, Inc.	(209)838-7842	/ (209)838-7842	info@qualityserviceinc.net
(CDO/CTO) (1st/ 2nd/ 3rd)	Day	Night/Cell	Email

Bacteriological monitoring frequency: **Monthly** ✓ **Quarterly**___ **Seasonal**___ of:
Monthly from: Routine #1 & Routine #2 Quarterly from: _____

Addresses or Locations of Routine and Repeat Sample Sites:

Routine #1 Well and Building Testing
The four **Repeat** samples shall be collected within **24 hours** of notification that the **Routine** sample failed at the following locations, using enumerated test methods with chlorine residuals reported on the test result *:

Repeat #1 Sample Tap @ Well # 3

Repeat #2 Sample Tap @ Bladder Tanks

Repeat #3 Sample Tap @ S.W. Building A Connection

Repeat #4 Sample Tap @ S.E Building A Connection

Routine #2 **Well and Building Testing Cont.**

Repeat #1 Sample Tap @ Building C Connection

Repeat #2 Sample Tap @ N.W. Building B Connection

Repeat #3 Sample Tap @ N.E Building B Connection

Repeat #4 Drinking Fountain at Building A

By signing below, I hereby submit this sample siting plan and authorize the above-mentioned State certified laboratory to release and submit copies of **all** analytical results for this water system to the San Joaquin County Environmental Health Department.

Submitted by:_____* Date:_____
*Owner or Operator shall notify the EHD any positive Repeat or E.coli/fecal result by the end of the day.

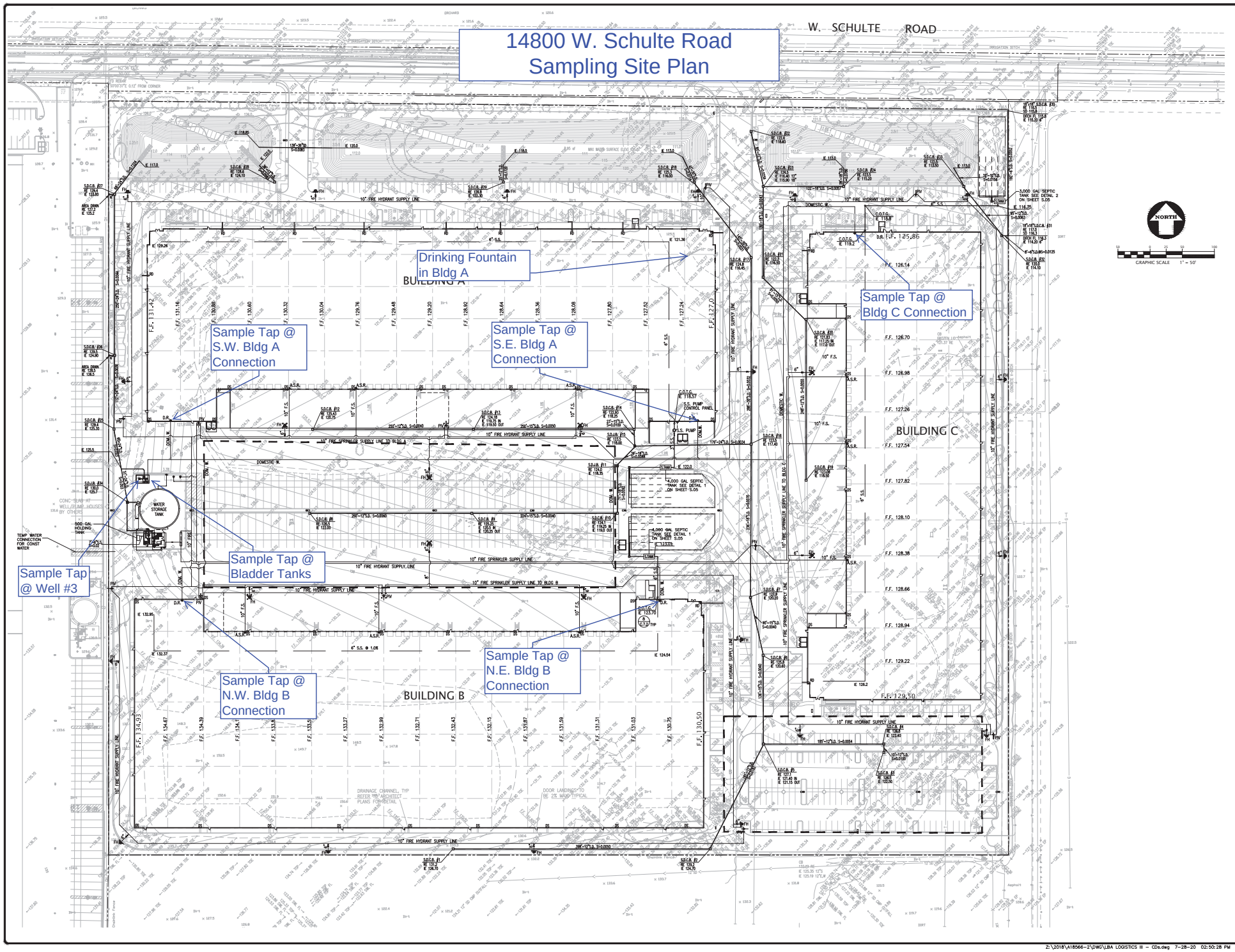
14800 W. Schulte Road
Sampling Site Plan
W. SCHULTE ROAD
Drinking Fountain in Bldg A
Sample Tap @ Bldg C Connection
Sample Tap @ S.W. Bldg A Connection
Sample Tap @ S.E. Bldg A Connection
Sample Tap @ Bladder Tanks
Sample Tap @ Well #3
Sample Tap @ N.E. Bldg B Connection
Sample Tap @ N.W. Bldg B Connection
BUILDING A
BUILDING B
BUILDING C
NORTH
GRAPHIC SCALE 1" = 50'
UTILITY PLAN
LBA LOGISTICS CENTER III
14800 W. SCHULTE ROAD
TRACY
CALIFORNIA
KIER+WRIGHT
DATE 06/09/2020
SCALE 1" = 50'
ENGINEER M.F.B.
DRAFTER
JOB NO. A18566-2
SHEET C.4.1
OF 13 SHEETS

SAN JOAQUIN COUNTY
Greatness grows here.

Environmental Health Department

Existing - Not to Change

SAMPLE SITING PLAN
SAN JOAQUIN COUNTY ENVIRONMENTAL HEALTH DEPARTMENT

Schulte Rd. Warehouse — 3902181
Name of Small Public Water System (SPWS) — PS Code

LBA RV-Company, LLC
Owner(s)

2 — 110 Employees
Number of service connections — Number of customers

Fruit Grower's Laboratory / Quality Service, Inc. /
Name of Certified Laboratory — Name of Sampler (If not Laboratory) — Certified by

Name(s) and Phone Number(s) of Person(s) Laboratory are to Contact Following Any Positive Sample in order of 1st/2nd/3rd choice:

Lisa DuBose	(415)710-6211 /		ldubose@lbarealty.com
SPWS Contact (1st/ 2nd/ 3rd)	Day	Night/Cell	Email
	/		
SPWS Contact (1st/ 2nd/ 3rd)	Day	Night/Cell	Email
Quality Service, Inc.	(209)838-7842	/ (209)838-7842	info@qualityserviceinc.net
(CDO/CTO) (1st/ 2nd/ 3rd)	Day	Night/Cell	Email

Bacteriological monitoring frequency: **Monthly** ✓ **Quarterly**___ **Seasonal**___ of:
Monthly from: Routine #1 & Routine #2 Quarterly from: _____

Addresses or Locations of Routine and Repeat Sample Sites:

Routine #1 Hosebib @ N.E. Side of Dock
The four **Repeat** samples shall be collected within **24 hours** of notification that the **Routine** sample failed at the following locations, using enumerated test methods with chlorine residuals reported on the test result *:

Repeat #1 Hosebib @ N.E. Side of Dock (same as above)

Repeat #2 Women's Restroom Sink

Repeat #3 Sample Tap @ Bladder Tanks

Repeat #4 Well #1

Routine #2 Sample Tap @ RR Sink for S.E. Office (14900 W. Schulte)

Repeat #1 Sample Tap @ RR Sink for S.E. Office (14900 W. Schulte) -same as above-

Repeat #2 Exterior Sample Tap on West Side of 14900 W. Schulte

Repeat #3 Upstream Sample Site (at storage or pressure tank)

Repeat #4 2017-14990 East Well #2

By signing below, I hereby submit this sample siting plan and authorize the above-mentioned State certified laboratory to release and submit copies of **all** analytical results for this water system to the San Joaquin County Environmental Health Department.

Submitted by:_____* Date:_____
*Owner or Operator shall notify the EHD any positive Repeat or E.coli/fecal result by the end of the day.

14900 Schulte Road - BSSP Site Map

Sample site plan for two (2) primary supplies:
Well #1 and Well #2 (2017 East Well)

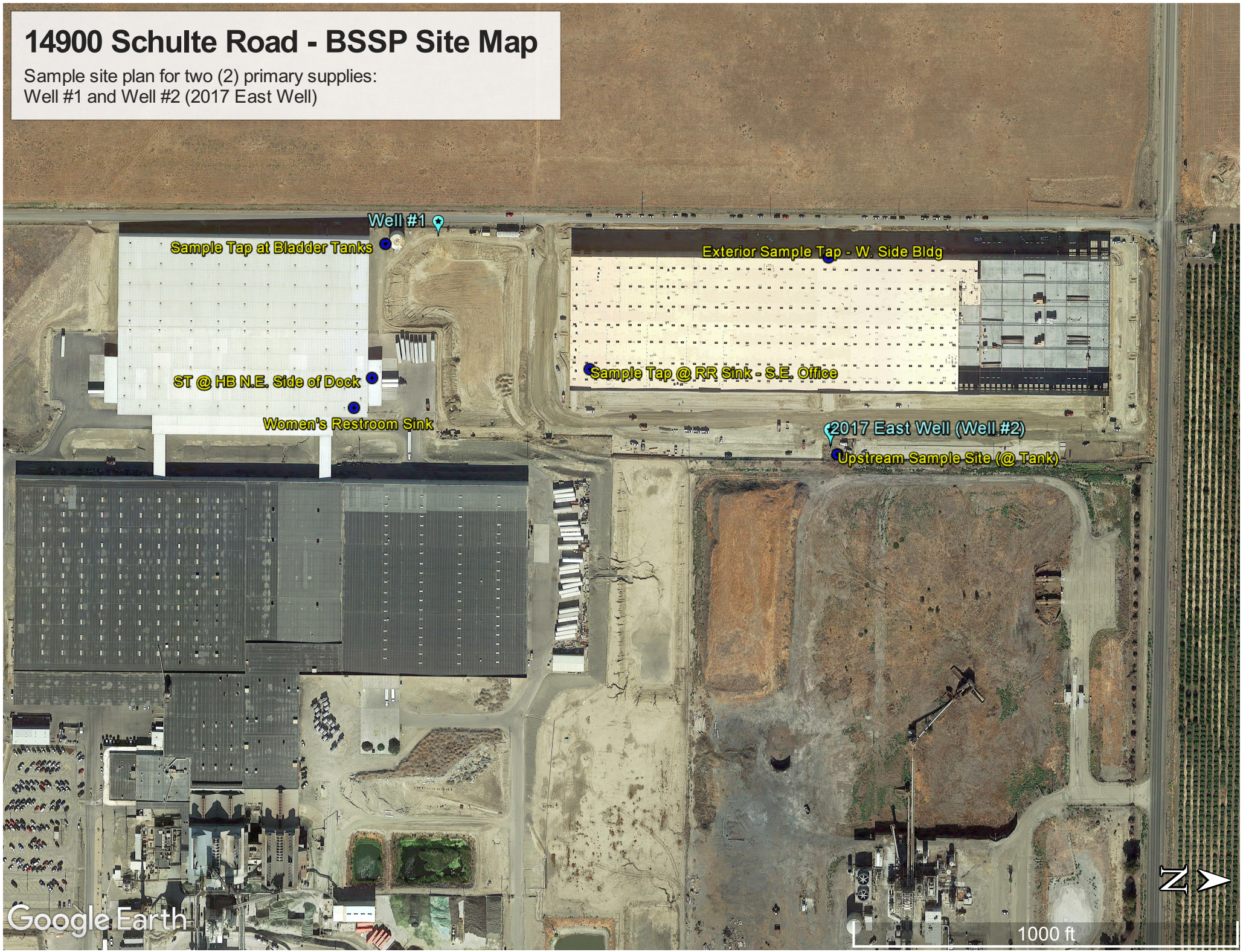

SAN JOAQUIN COUNTY
Greatness grows here.

Environmental Health Department

Kasey Foley, REHS, Interim Director
PROGRAM COORDINATORS
Robert McClellon, REHS
Jeff Carruesco, REHS, RDI
Willy Ng, REHS
Muniappa Naidu, REHS
Michael Kith, REHS
Melissa Nissim, REHS

System No. 39

WATER QUALITY EMERGENCY NOTIFICATION PLAN

Name of Water System: _____
Physical Location Address: _____

The following persons have been designated to implement the plan upon notification by the Division of Drinking Water and/or County of San Joaquin that an imminent danger to the health of the water users exists:

Water System: Contact Name & Title	**Email Address**	**Telephone Day**	**Evening**
1.			
2.			
3.			

The implementation of the plan will be carried out with the following Division of Drinking Water and County Health personnel:

	Contact Name & Title	**Telephone Day**	**Evening**
1.	San Joaquin County Environmental Health Department (EHD)	(209) 468-3420	(209) 468-3420
2.	Navjot Sahota, REHS, San Joaquin County EHD	(209) 468-3178	(209) 468-3420 ER Staff
3.	Mai Vue, EHS, San Joaquin County EHD	(209) 468-3284	(209) 468-3420 ER Staff
4.	Bhupinder Sahota, PE, Division of Drinking Water	(209) 948-7696	(209) 608-9108

5. If the above personnel cannot be reached, contact:

Office of Emergency Services (24 Hrs.) Ask for "State Water Resources Control Board –Division of Drinking of Water, Duty Officer"	(800) 852-7550 or (916) 845-8911

NOTIFICATION PLAN

☐ STANDARD PLAN: Please check if you agree to notify customers by door-to-door contact or written handout sheets. It is important that the people going door-to-door are coordinated and trained so they distribute copies to the designated areas of the water system. Maps of the specific areas that the notices are to be distributed should be provided to the customers.

☐ ALTERNATE PLAN: Please check if you propose to use another method, and **attach** the alternate plan to this form.

Report prepared by:

_____ _____
Signature and Title Date

TECHNICAL REPORT OUTLINE

For public water systems using groundwater

The information contained in the Technical Report can be used to fulfill the Technical section of the TMF Assessment.

1. PURPOSE OF REPORT

State reason for permit amendment.

- New Permit
- Change in ownership permit amendment
- Permit amendment due to:
    - Change in source/treatment/facilities
    - SRF, Prop 50, or Prop 84 improvement project
    - Safe Drinking Water Bond Law improvement project
    - System consolidation
    - Issuance of a waiver or exemption

2. BRIEF DESCRIPTION OF WATER SYSTEM

- Provide the name and address of the legal responsible owner at their headquarters site. If they have a different site for their field operations, also supply that address.
- Provide a very brief description of the water system. Give number of active, standby and inactive sources and any water quality noncompliance. Number and total capacity of storage facilities. Number and type of treatment facilities and for what constituents.
- Give number of service connections.
- Give population served
- Number of pressure zones
- Interconnection to other water systems

3. AREA SERVED AND SITE MAP

- Describe existing area (residential, commercial, heavy/light industry, agricultural), including features that may have an impact on the system.
- Provide a site map of the water system showing the locations of the well(s), pressure tank, existing and proposed water lines (i.e. irrigation, fire, and domestic), buildings served, septic system areas, and potential sources of contamination. Include the distances between any source of contamination and the well and all existing and proposed drinking water distribution lines.

4. SOURCE CAPACITY (See attached EHD Water Study form)

- Estimate maximum daily demand (MDD) and peak hourly demand (PHD) and include the methods, assumptions, and calculations used to determine the estimates. (see California Waterworks Standards, Title 22, Chapter 26, 64554(b)).
- Provide information demonstrating the proposed source(s) are adequate to meet the MMD and PHD. Such information includes, but is not limited to well pump

tests, calculated sustained well yields, the capacities of all pumping facilities, distribution reservoirs.

5. WATER SYSTEM COMPONENTS

a) SOURCE

- Provide number and identification of active potable sources.
- Provide copies of all initial water quality results. Do any constituents exceed primary or secondary MCLs? Summarize the results and discuss indicate any treatment that will be required (see below)
- Provide depth of sanitary annular seal.
- Provide copy of DWR well completion report
- Describe surface features (casing vents, air vacuum release valves, pump to waste discharge site, check valves, meters, sampling taps, pump pedestal, potential for flooding). (Water System components shall meet NSF/ANSI Standard 61)
- Site security (housed, fenced, locked, etc.)
- Flowmeter (meter quantity of water flow and record total monthly production)

b) STORAGE RESERVIORS

- Give number storage units, location, capacity, construction, size, coating, inlet/outlet arrangement and manufacturer's specifications (verify compliance with NSF/ANSI Standard 61)
- Pressure zones
- How drains, vents, and other openings will be protected against entry of birds, insects, rodents and animals.
- Site security protections information
- Overflow shall not be directly connected to sewer
- Sampling tap
- Reservoir shall be equipped with isolation valves to allow for continued distribution of water when reservoir is removed from service.

c) DISTRIBUTION SYSTEM

- Describe all existing and proposed water system components including, construction material, age, diameter, condition, and irrigation piping.
- Operating pressure (>20 psi).
- Water mains and supply lines separation distances from sewer lines and sources of contamination.
- Construction criteria when separation criteria not met
- Dead ends and flush out facilities
- Disinfection practices and monitoring for new repaired lines
- Location and type of backflow prevention devices

d) HYDROPNEUMATIC TANKS, BOOSTER OR PUMP STATIONS (if applicable)

- Purpose and Number
- Location
- Capacity Standby equipment
- Protection against flooding
- Operational controls
- Condition and sanitary review

e) AUXILARY SOURCES AND INTERCONNECTIONS (if applicable)

- Describe the number and location of each. Include information on capacity, frequency of use, type of connection and any sanitary features.

f) TREATMENT (if applicable)

- For chemical constituent removal, chemical addition (fluoridation, chlorination, etc.), corrosion control, softening, taste and odor control
- Provide a section on each process, including dosing and target concentrations Each section shall include sources treated. Accompanying water system plans shall include plant layout and flow diagram.
- Each treatment facility shall have operations, maintenance and monitoring plan
- Operator certification requirements
- NSF Approved chemicals and water contact surfaces, including storage tanks filter media and distribution system piping (NSF/ANSI 60 and 61).
- Operations and Maintenance Plan (see below)

6. OPERATION AND MAINTENANCE

a) ORGANIZATION AND PERSONNEL

- Name and address of person responsible for operation and maintenance. Description or organization chart. Include number of personnel, certification (water treatment and water distribution certificates)

b) DISTRIBUTION RESERVOIRS

- Frequency of Inspection
- Discuss how often the tank will be drained and reservoir sediment removed

c) BACTERIOLOGICAL QUALITY MONITORING & EMERGENCY CHLORINATION PLAN

- Discuss bacteriological sampling requirements (Title 22, Article 3). Reference Bacteriological Sample Siting Plan.
- Submit a written plan for disinfecting wells, reservoirs, & water distribution lines, in the event of contamination, repair or inspection, or depressurization.
- Include discussion of "repeat", "special", and follow-up "routine"

sampling procedures in the event of system depressurization and/or a positive coliform sample result.

d) FLUSHING PROGRAM
- Describe program-frequency, duration
- Dead-end flushing – number with flush outs
- Record maintenance (list what should be included)
- Is their flushing program adequate?

e) CROSS CONNECTION PROGRAM (IF APPLICABLE)
- Annual testing, repairs, replacement of devices. Maintenance of records and submittal of reports

f) EMERGENCY NOTIFICATION PLAN
- Is it up-to-date?
- Is it on file with the Division/LPA?
- Is the ENP adequate?

g) TREATMENT SYSTEM
- What records shall be kept?
- How each component is maintained, including inspection frequency?
- Monitoring program. How will the treatment system's effectiveness be measured?
- Training requirements for on-site personnel

APPENDICES

APPENDIX B
14800 W Schulte Construction Drawings

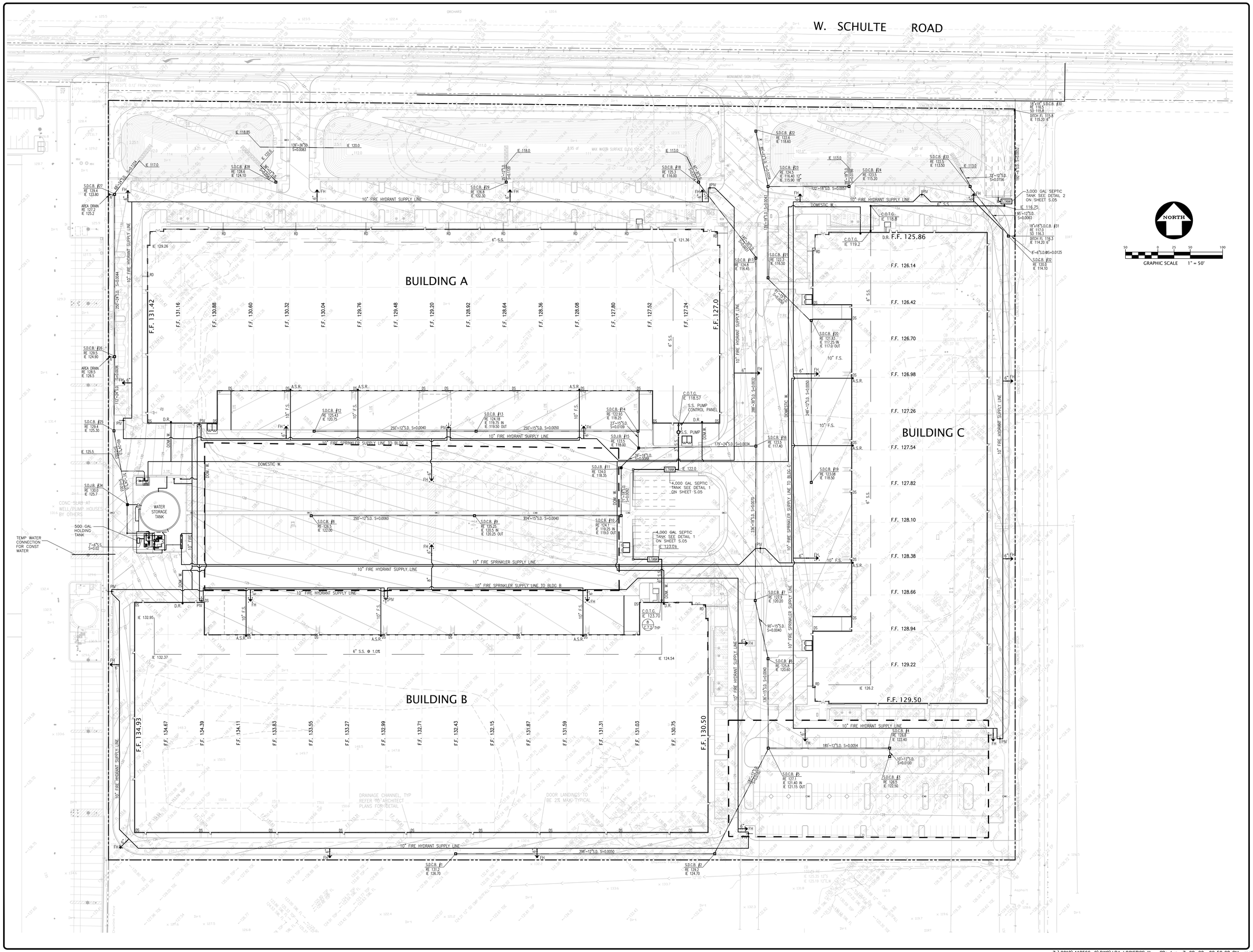

NO.	REVISION	BY

NO.	SUBMITTAL	BY

REVISION 07/13/2020

KIER+WRIGHT
2850 Collier Canyon Road
Livermore, California 94551
Phone (925) 245-8788
www.kierwright.com

REGISTERED PROFESSIONAL ENGINEER
MICHAEL F. BASSILIOS
No. 71814
Exp. 12-31-21
CIVIL
STATE OF CALIFORNIA

UTILITY PLAN
LBA LOGISTICS CENTER III
14800 W. SCHULTE ROAD

TRACY CALIFORNIA

DATE	06/09/2020
SCALE	1" = 50'
ENGINEER	M.F.B.
DRAFTER	-
JOB NO.	A18566-2
SHEET	C.4.1
OF	13 SHEETS

Z:\2018\A18566-2\DWG\LBA LOGISTICS III - CDs.dwg 7-28-20 02:50:28 PM rsalib

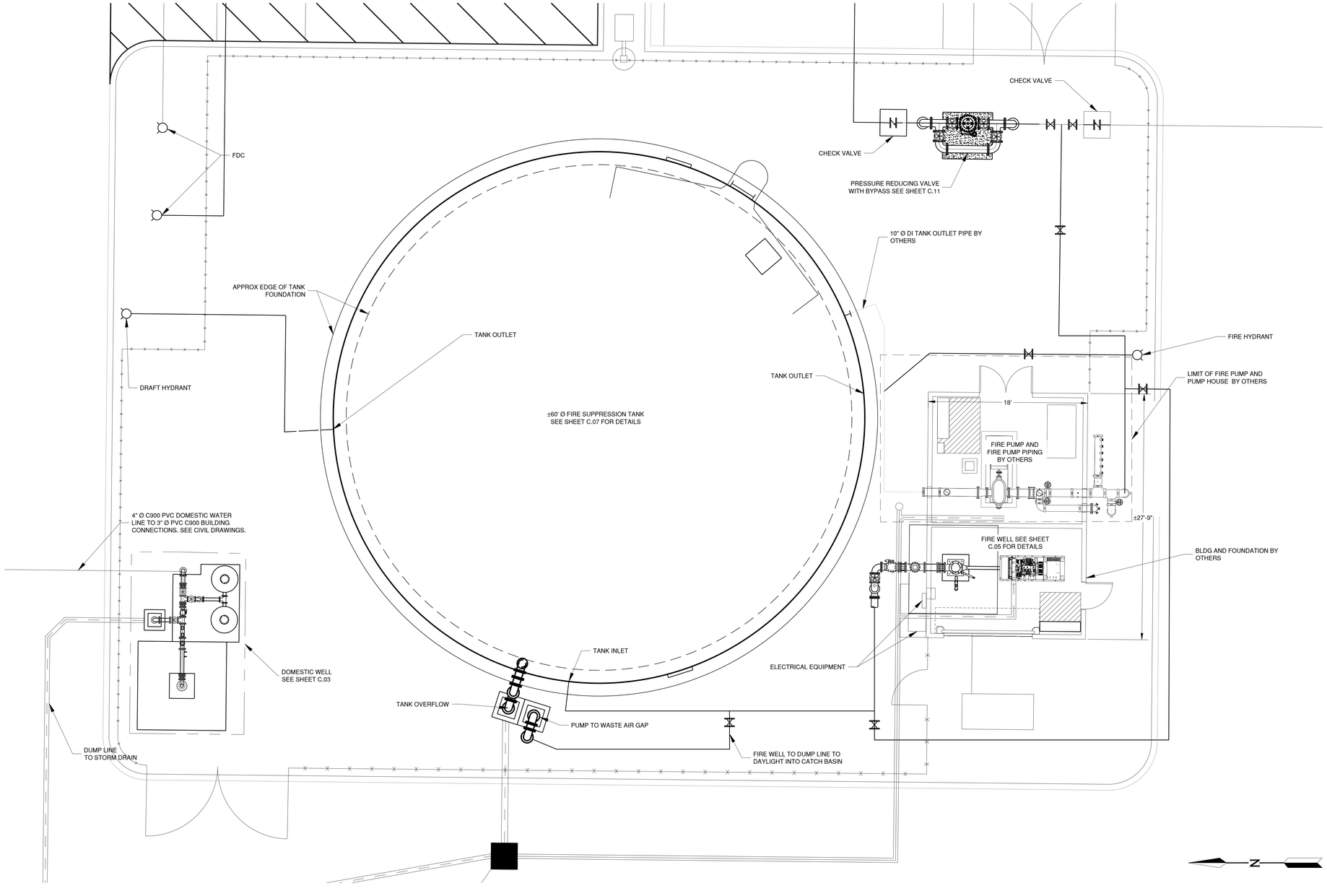

5 0 5 10

SCALE: 1 INCH = 5 FEET

UTILITY YARD PLAN

SCALE: 1" = 5'

NOTE:
1. ALL FITTINGS, VALVES, AND COMPONENTS OF THE DOMESTIC WATER SYSTEM SHALL BE NSF 61 RATED.
2. ALL FITTINGS, VALVES, AND COMPONENTS OF THE FIRE SUPPRESSION SYSTEM SHALL BE UL/FM LISTED UNLESS OTHERWISE APPROVED BY SOUTH SAN JOAQUIN COUNTY FIRE AUTHORITY.

PLAN CHECK SUBMITTAL - NOT FOR CONSTRUCTION

NO.	REVISION	BY

NO.	REVISION	BY

Schaaf & Wheeler
CONSULTING CIVIL ENGINEERS
1171 HOMESTEAD ROAD, STE 255
SANTA CLARA, CA 95050
(408) 246-4848

REGISTERED PROFESSIONAL ENGINEER
GLEN M. ANDERSON
No. 76720
CIVIL
STATE OF CALIFORNIA

UTILITY YARD PLAN
LBA LOGISTICS CENTER III
14800 W. SCHULTE ROAD
TRACY CALIFORNIA

DATE	11/02/2020
SCALE	PER SHEET
ENGINEER	G.M.A.
DRAFTER	B.F.C.
JOB NO.	-
SHEET	C.02
	OF 10 SHEETS

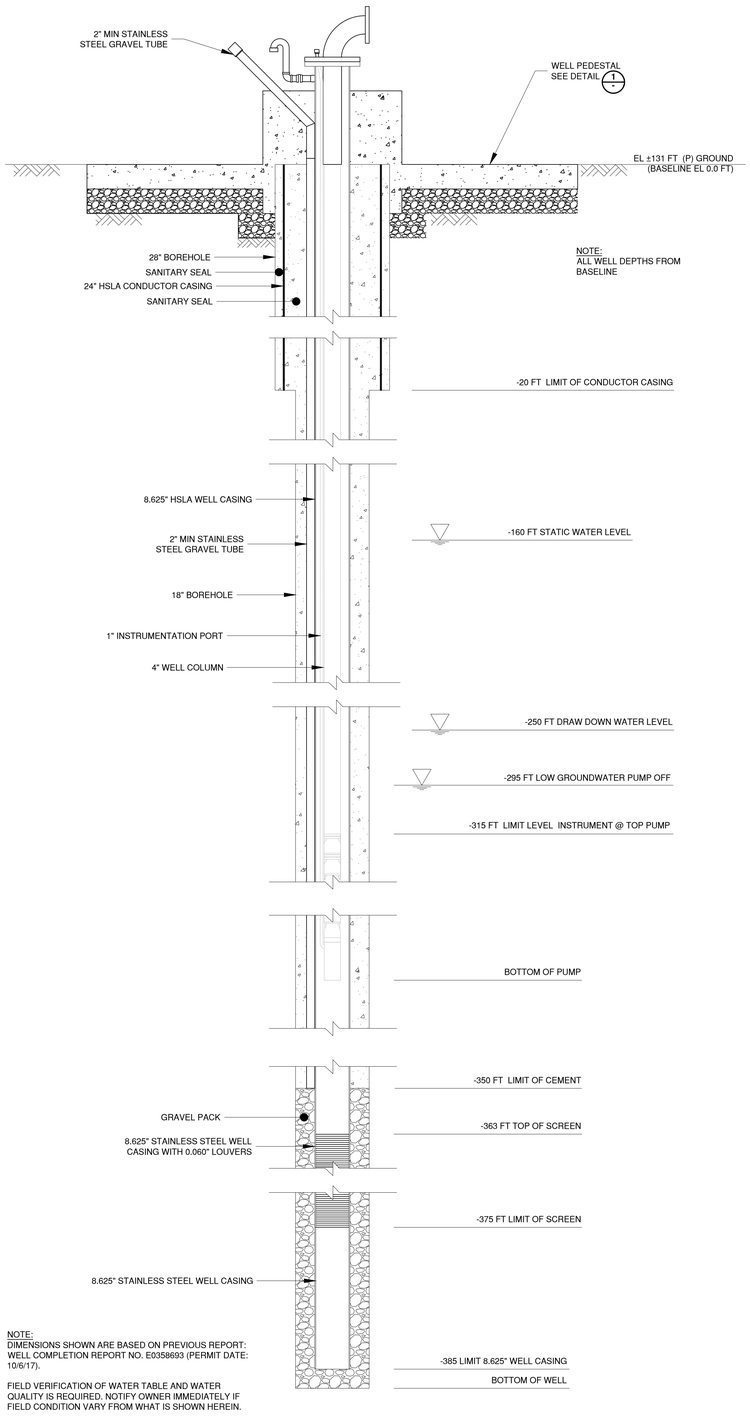

NOTE:
DIMENSIONS SHOWN ARE BASED ON PREVIOUS REPORT: WELL COMPLETION REPORT NO. E0358693 (PERMIT DATE: 10/6/17).

FIELD VERIFICATION OF WATER TABLE AND WATER QUALITY IS REQUIRED. NOTIFY OWNER IMMEDIATELY IF FIELD CONDITION VARY FROM WHAT IS SHOWN HEREIN.

DOMESTIC WELL ELEVATION

SCALE: N.T.S.

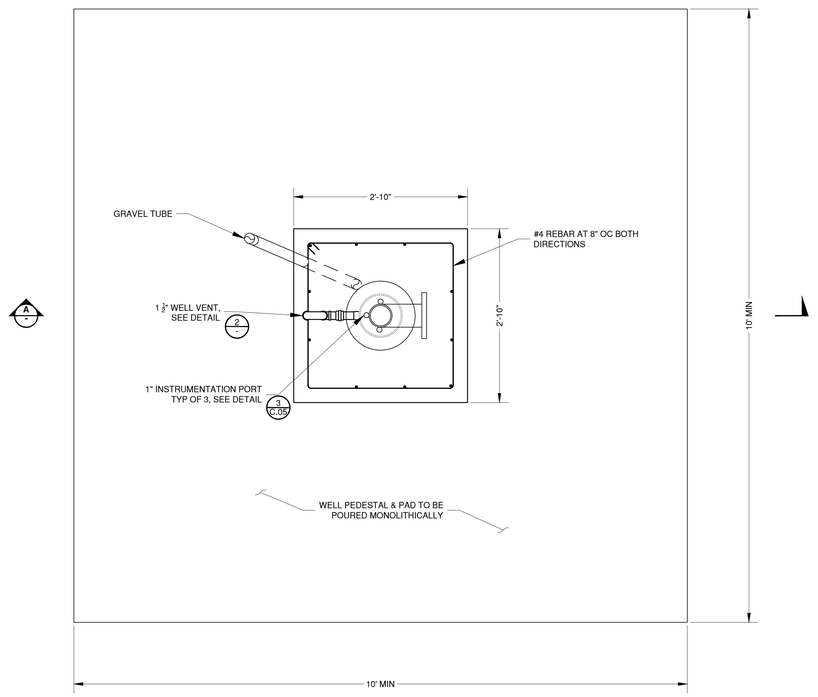

DOMESTIC WELL PEDESTAL PLAN VIEW 1/-

SCALE: 1" = 1'

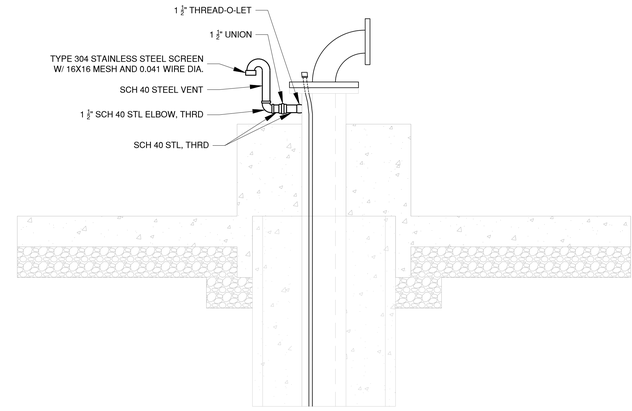

DOMESTIC WELL VENT 2/-

SCALE: N.T.S.

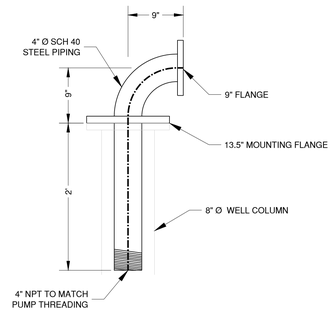

DOMESTIC WELL DISCHARGE 3/-

SCALE: N.T.S.

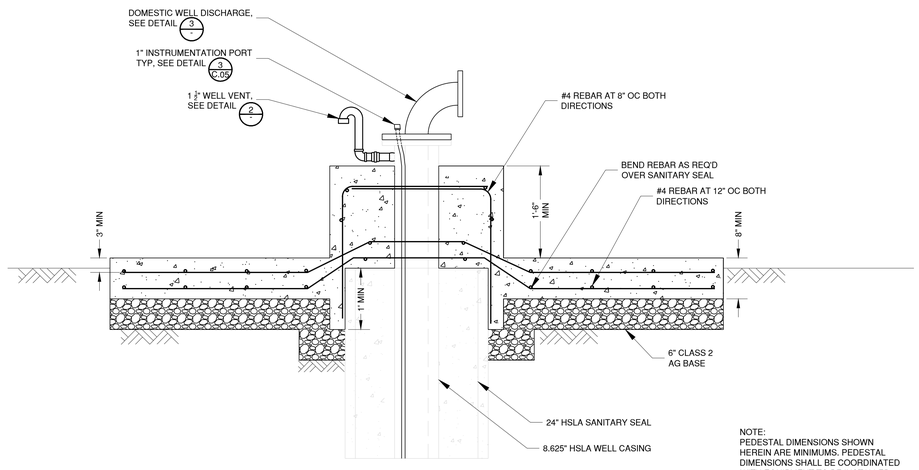

NOTE:
PEDESTAL DIMENSIONS SHOWN HEREIN ARE MINIMUMS. PEDESTAL DIMENSIONS SHALL BE COORDINATED WITH EQUIPMENT TO BE INSTALLED.

DOMESTIC WELL PEDESTAL ELEVATION A/-

SCALE: 1" = 1'

WELL SPECIFICATIONS

1. DOMESTIC WELL
 1.1. MARTERIALS
  1.1.1. CONDUCTOR CASING: 1/4" HIGH-STRENGTH, LOW-ALLOY (HSLA) STEEL
  1.1.2. WELL CASING BLANKS: 1/4" HSLA STEEL OR TYPE 316 STAINLESS STELL AS SHOWN ON DRAWINGS
  1.1.3. SCREENS: 1/4" TYPE 316 STAINLESS STEEL, LOUVER STYLE WITH 0.060" SLOT SIZE.
  1.1.4. PROVIDE DIELECTRIC COUPLING BETWEEN DISSIMILAR METALS.

SEE C.01 FOR ADDITIONAL REQUIREMENTS

PLAN CHECK SUBMITTAL - NOT FOR CONSTRUCTION

NO.	REVISION	BY

NO.	REVISION	BY

Schaaf & Wheeler
CONSULTING CIVIL ENGINEERS
1171 HOMESTEAD ROAD, STE 255
SANTA CLARA, CA 95050
(408) 246-4848

REGISTERED PROFESSIONAL ENGINEER
GLEN M. ANDERSON
No. 76720
CIVIL
STATE OF CALIFORNIA

DOMESTIC WELL
LBA LOGISTICS CENTER III
14800 W. SCHULTE ROAD
TRACY, CALIFORNIA

DATE	11/02/2020
SCALE	PER SHEET
ENGINEER	G.M.A.
DRAFTER	B.F.C.
JOB NO.	-
SHEET	C.03 OF 10 SHEETS

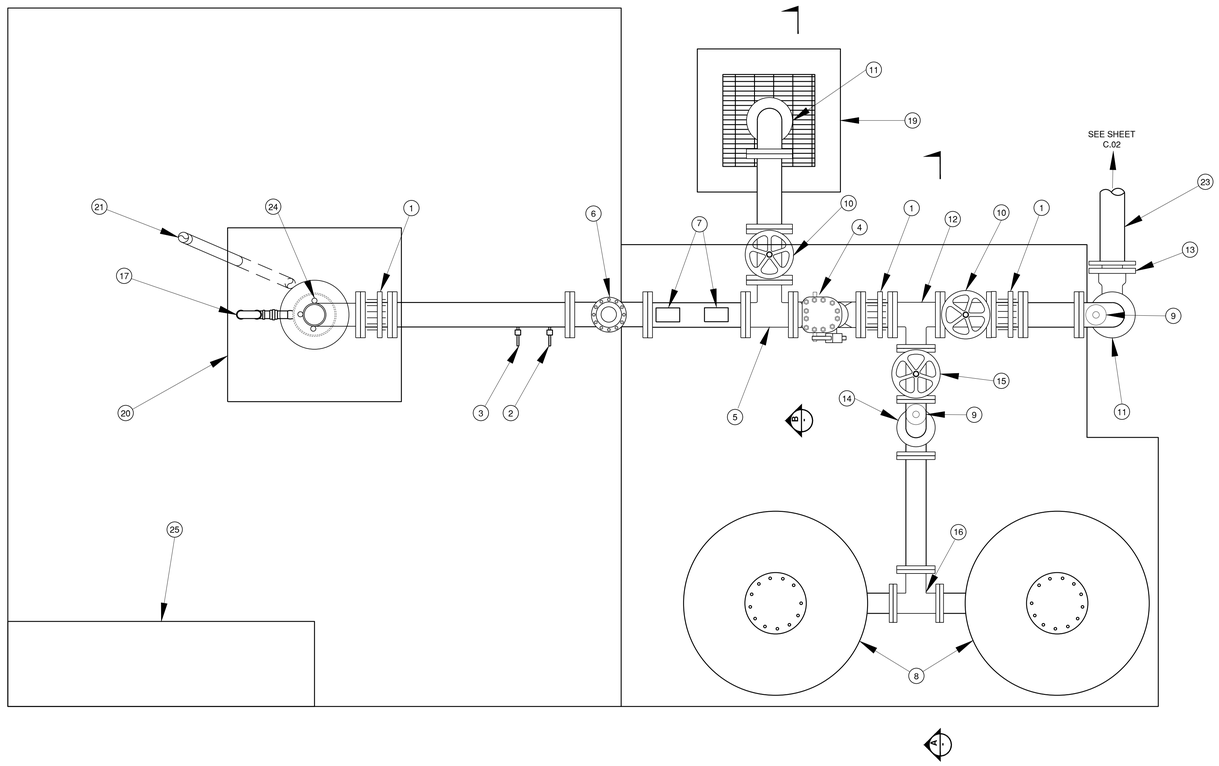

PLAN VIEW

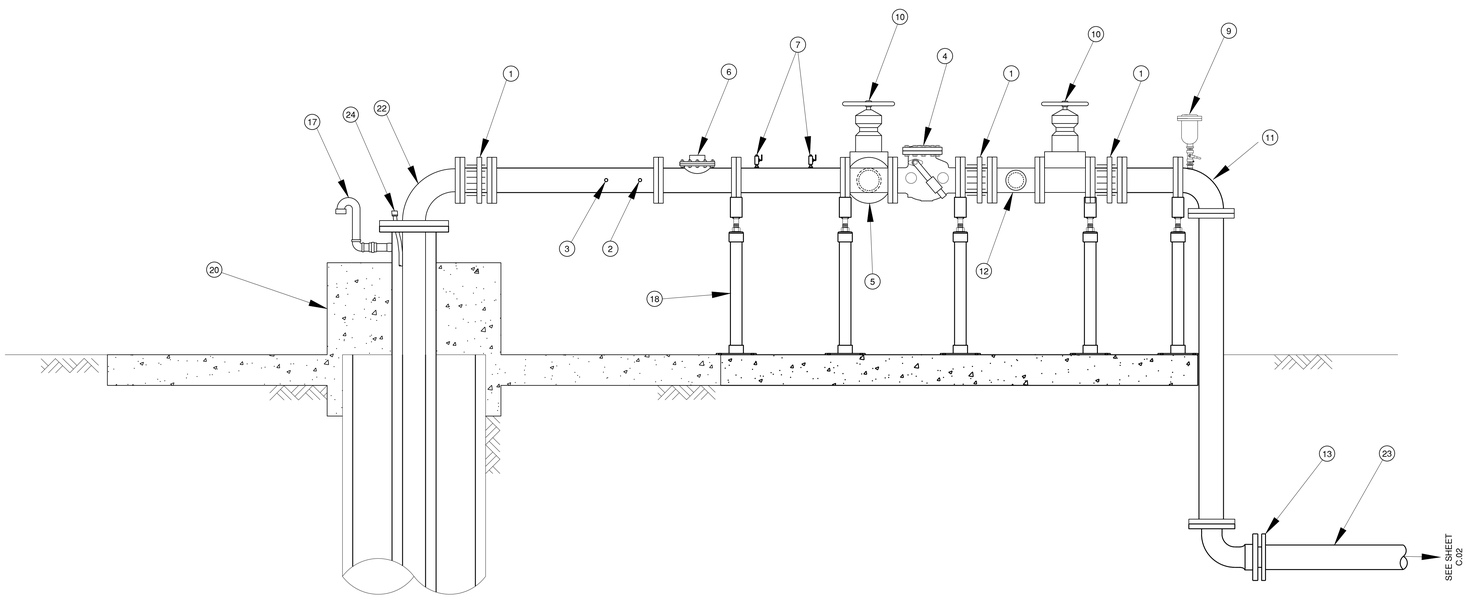

ELEVATION

PIPING PLAN
SCALE: 1" = 1'

1. 4" DISMANTLING JOINT, FL
2. SAMPLING TAP, SEE DETAIL 4/C.11
3. EXTRA TAP, SEE DETAIL 4/C.11
4. 4" CHECK VALVE, FL X FL
5. 4" X 4" DI TEE, FL X FL
6. 4" FLOW METER
7. PRESSURE SWITCH OR EQUAL, TYP OF 2, SEE DETAIL 2/C.11
8. 264 GAL HYDRO PNEUMATIC TANK, WESSELS CO. FXA-1000
9. AIR RELEASE VALVE, SEE DETAIL 5/C.11
10. 4" GATE VALVE, FL
11. 4" DI 90° ELBOW, FL
12. 4" X 3" DI TEE, FL X FL
13. 4" 90° ELBOW, FL X MJ
14. 3" DI 90° ELBOW, FL
15. 3" GATE VALVE, FL
16. 3" X 3" DI TEE, FL X FL
17. 1 ½" VENT, SEE DETAIL 1/C.03
18. PIPE SUPPORT, SEE DETAIL 3/C.11
19. 24" X 24" CATCH BASIN
20. WELL HEAD, 1/C.03
21. 2" MIN SS GRAVEL TUBE
22. WELL DISCHARGE, SEE DETAIL 1/C.03
23. 4" Ø C900 PVC PIPE
24. INSTRUMENTATION PORT, SEE DETAIL 3/C.05
25. WELL CONTROL PANEL
26. ¾" BIRD SCREEN BETWEEN FL
27. 3" 90° ELBOW, FL X MJ

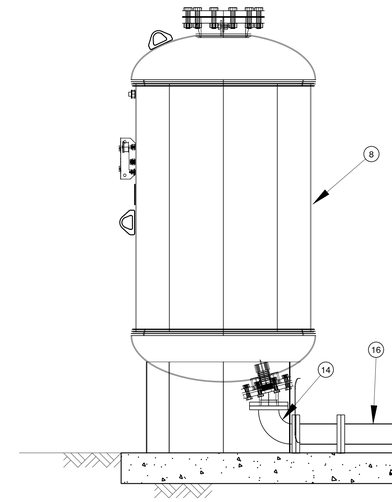

SECTION A
SCALE: 1" = 1'

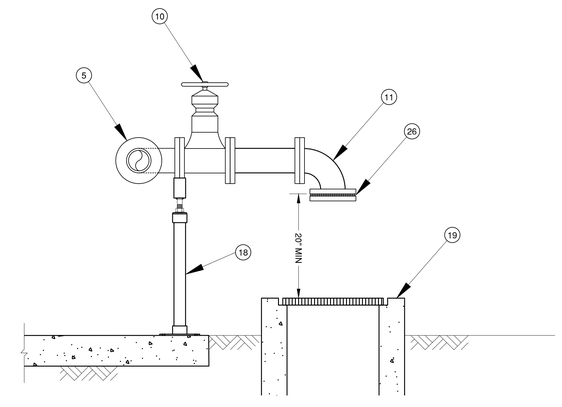

SECTION B
SCALE: 1" = 1'

NOTE:
1. ALL FITTINGS, VALVES, AND COMPONENTS OF THE DOMESTIC WATER SYSTEM SHALL BE NSF 61 RATED

PLAN CHECK SUBMITTAL - NOT FOR CONSTRUCTION

NO.	REVISION	BY

NO.	REVISION	BY

Schaaf & Wheeler
CONSULTING CIVIL ENGINEERS
1171 HOMESTEAD ROAD, STE 255
SANTA CLARA, CA 95050
(408) 246-4848

REGISTERED PROFESSIONAL ENGINEER
GLEN M. ANDERSON
No. 76720
CIVIL
STATE OF CALIFORNIA

DOMESTIC WELL PIPING PLAN
LBA LOGISTICS CENTER III
14800 W. SCHULTE ROAD
TRACY CALIFORNIA

DATE	11/02/2020
SCALE	PER SHEET
ENGINEER	G.M.A.
DRAFTER	B.F.C.
JOB NO.	-
SHEET	C.04
	OF 10 SHEETS

IRRIGATION PIPE & WIRE LEGEND

SYMBOL	MANUFACTURE / MODEL NO. / DESCRIPTION	DETAIL	SHEET
(solid line)	BURIED NON-PRESSURE LATERAL LINE PIPE: SCH. 40 PVC PIPE FOR SIZES 3/4" TO 2-1/2". MINIMUM PIPE SIZE SHALL BE 3/4" - SIZE LATERALS PER PLAN.	GG	L6.3
(dashed line)	BURIED PRESSURE IRRIGATION MAINLINE: SCH. 40 PVC PIPE FOR MAINLINE SIZES (1-1/2" AND SMALLER). CLASS 315 PVC PIPE FOR MAINLINE SIZES (2" -2-1/2"). CLASS 200 BELL AND GASKET / RING-TITE PVC PIPE FOR MAINLINE SIZES 3" AND LARGER.	GG, HH	L6.3
NO SYMBOL	AS APPROVED - CONCRETE THRUST BLOCKS CONSISTING OF MINIMUM (1) ONE CUBIC FOOT OF CONCRETE (2,000 PSI) SHALL BE INSTALLED FOR ALL MAINLINE 2-1/2" OR GREATER AT ELBOWS AND AT POINT OF CHANGE IN DIRECTION.	HH	L6.3
	SLEEVING - SCH 40 PVC PIPE, EXTEND 12" BEYOND EDGE OF HARDSCAPE. SLEEVE SHALL BE MINIMUM TWICE THE DIAMETER OF THE PIPE OR WIRE BUNDLE CARRIED, MINIMUM 2" SIZE. PLACE BELOW ALL PAVING, HARDSCAPE, ETC., AND AS DIRECTED BY OWNER'S AUTHORIZED REPRESENTATIVE. SLEEVE LOCATIONS SHALL BE MARKED AT EACH END AT THE TIME OF INSTALLATION WITH A PAINTED SPOT OR OTHER SIMILAR MARKING ON THE BACK OF THE CURB. EXACT SLEEVE LOCATIONS SHALL BE RECORDED ON RECORD DRAWINGS WITH DIMENSIONING FOR IRRIGATION AS-BUILT PLANS PRIOR TO BACKFILL.	II	L6.3
	CONTROL WIRE CONDUIT - SCH. 40 PVC PIPE, INSTALL UNDER ALL PAVING / HARDSCAPE AREAS. CONDUIT SHALL BE MINIMUM TWICE THE DIAMETER OF WIRE BUNDLE CARRIED, MINIMUM 2" SIZE.	II	L6.3
(dotted line)	PAIGE ELECTRIC - 7072D, #14/2 AWG. / 2 CONDUCTOR "MAXI" CABLE, 14 GAUGE 2-WIRE CABLE (RED/BLACK) POLYETHYLENE COATED, "PURPLE" JACKETED WIRE FOR 2-WIRE PATH. CONNECT TO CONTROLLER PER MANUFACTURER'S SPECIFICATIONS.	HH, II, JJ, KK	L6.3
NO SYMBOL	3M - DBR/Y-6 DIRECT BURIAL WIRE CONNECTORS FOR USE ON ALL WIRE CONNECTIONS.	JJ	L6.3
NO SYMBOL	AS APPROVED - NON-POTABLE WATER ALUMINUM SIGN PRINTED WITH "NOTICE NON-POTABLE WATER NOT FOR DRINKING OR COOKING USE" IN BOTH ENGLISH AND SPANISH. INSTALL QUANTITY AND LOCATIONS PER DISTRICT AND CITY REQUIREMENTS.	N/A	N/A

NOTE:
ALL WIRE SPLICES SHALL BE PLACED WITHIN PLASTIC VALVE BOX OR WIRE PULL BOX. WIRE SPLICES MUST BE TWISTED WITH WIRE TWISTING TOOL WITH A MAXIMUM OF TWO WIRES PER TWIST. REFER TO MANUFACTURE RECOMMENDATION FOR PROPER WIRE CONNECTIONS.

SPLICING RECOMMENDATIONS:
WIRE SPLICES ARE THE WEAK LINK OF ANY ELECTRICAL CIRCUIT. IT IS ESPECIALLY IMPORTANT TO MAKE PROPER JOINTS IN IRRIGATION SYSTEMS BECAUSE THE JOINTS ARE EXPOSED TO WET AND DAMP ENVIRONMENTS THAT CAN CAUSE CORROSION OF THE COPPER CONDUCTOR, AND PREMATURE FAILURE. PAIGE ELECTRIC RECOMMENDS THE STRICT USE OF MODEL DBR/Y-6, AS MANUFACTURED BY THE 3M COMPANY (PAIGE SPECIFICATION P7364D)

BELL AND GASKET / RING TITE PIPE & EQUIPMENT LEGEND

SYMBOL	MANUFACTURE / MODEL NO. / DESCRIPTION	DETAIL	SHEET
(dashed line)	AS APPROVED - CLASS 200, BELL AND GASKET / RING TITE PVC PIPE, FOR MAINLINE SIZES 3" AND LARGER, AS MAINLINES 24" BELOW GRADE.	PP, QQ	L6.3
NO SYMBOL	LEEMCO - ALL FITTINGS USED WITH RING-TITE BELL AND GASKET FITTING PVC PIPE SHALL BE LEEMCO "DEEP BELL" DUCTILE IRON FITTINGS. USE LEEMCO JOINT RESTRAINTS ON ALL DIRECTIONAL CHANGES AND ON COUPLINGS WITHIN 50 FEET OF DIRECTIONAL CHANGE. USE JOINT RESTRAINTS ON ALL EQUIPMENT INSTALLED ON RING-TITE PIPE.	MM, NN, OO, PP, QQ	L6.3
(gate valve symbol)	LEMCO - LMV-xx-xB, LM SERIES MAINLINE GATE VALVE. FOR BELL AND GASKET / RING-TITE PVC PIPE MAINLINE 3" AND LARGER, SIZE TO MATCH MAINLINE SIZE.	MM, NN, OO	L6.3

NOTE:
1. BE SURE TO KEEP DIRT OFF LUBRICATED SPIGOT AND OUT OF THE GASKET BELL.
2. THE PIPE SHOULD BE BURIED AT LEAST 24 INCHES BELOW GROUND AND PREFERABLY BELOW THE FROST LINE.
3. INSTALLATION, TRENCHING, THRUST BLOCKING, PIPE RESTRAINTS AND BACKFILLING SHOULD BE PERFORMED IN ACCORDANCE WITH ASTM D2774.
4. BE SURE LINE IS PRESSURE TESTED BEFORE BACKFILLING. PIPE SHALL BE ADEQUATELY ANCHORED TO PREVENT MOVEMENT. THE JOINTS AND FITTINGS SHALL REMAIN EXPOSED TO FACILITATE INSPECTION FOR JOINT LEAKAGE.

IRRIGATION EQUIPMENT LEGEND

SYMBOL	MANUFACTURE / MODEL NO. / DESCRIPTION	DETAIL	SHEET
P	P.O.C. / POINT OF CONNECTION - IRRIGATION MAINLINE CONNECTION DOWNSTREAM OF WELL WATER BOOSTER PUMP, REFER TO CIVIL PLANS FOR EXACT LOCATION. VERIFY SIZE, LOCATION AND WATER PRESSURE IN FIELD.	N/A	N/A
RP	FEBCO - LF825YA, 2" R/P BACKFLOW PREVENTION DEVICE INSTALLED WITH MODEL LF650A WYE STRAINER WITH PLUG AND PIPE NIPPLE STRAINER KIT OPTION. IF WATER PRESSURE IS GREATER THAN 80 P.S.I. CONTRACTOR SHALL INSTALL A WILKINS "NR3" PRESSURE REGULATOR AS PART OF BACKFLOW ASSEMBLY.	M	L6.1
NO SYMBOL	V.I.T. STRONG BOX - SBBC-45CR, METAL POWDER COATED SMOOTH TOUCH BACKFLOW DEVICE ENCLOSURE WITH A V.I.T. STRONG BOX PBB-45 SLIP-ON INSULATION COVER. INSTALL ON A POURED IN PLACE CONCRETE BASE PER MANUFACTURE SPECIFICATIONS. PROVIDE PADLOCK AND TWO SETS OF KEYS.	M, N	L6.1
S	YARDNEY - SB2-P-F-80, 2" (PURPLE) BASKET STRAINER WITH FLANGED CONNECTIONS AND 80 MESH FILTER ELEMENT. STRAINER ASSEMBLY SHALL BE INSTALLED WITHIN A V.I.T. STRONG BOX SBBC-30CR SMOOTH TOUCH ENCLOSURE INSTALLED ON A POURED IN PLACE CONCRETE PAD.	O	L6.1
MV	GRISWOLD - 2250-K-E, SERIES 2" NORMALLY CLOSED, PRESSURE REDUCING, SURGE ANTICIPATING, EPOXY COATED, MASTER CONTROL VALVE. WIRE TO CONTROLLER WITH BLUE & WHITE TWISTED DIRECT BURIAL WIRES. INSTALL PER MANUFACTURERS RECOMMENDATIONS.	P	L6.2
FS	IMPERIAL TECHNICAL SERVICES - IFS-200F, 2" (FLOMEC) ULTRA SONIC FLOW METER, INSTALL PER MANUFACTURER'S RECOMMENDATIONS. WIRE TO CONTROLLER WITH PAIGE ELECTRIC CORP., #P7162D, FLOW SENSOR COMMUNICATION CABLE, 2 CONDUCTOR, SHIELDED 16 AWG SOLID COPPER INSTALLED WITHIN 1-1/4' PVC CONDUIT. CONTRACTOR TO INSTALL FLOW SENSOR WIRE PULL BOXES LOCATED EVERY 250' MAXIMUM SPACING AND AT ALL CROSSINGS. MAXIMUM 2000' CABLE RUN DISTANCE. ALSO INSTALL FLOW SENSOR WIRE PULL BOX AT AUTOMATIC CONTROLLER AND FLOW SENSOR LOCATIONS AND AT EACH CHANGE OF DIRECTION. FOR GRAPHIC CLARITY, PULL BOXES ARE NOT SHOWN ON PLANS. FLOW SENSOR IS SUPPLIED AS PART OF I.T.S. CONTROLLER ASSEMBLY.	Q	L6.2
EZ	EZ-FLO SYSTEMS - EZ-025-HX-CBV-300-FERTI-MAXX STARTER-25, 25 GALLON FERTILIZING SYSTEM WITH MINIMUM 90 DAY SUPPLY OF 25 LB BAG(S) STARTER FERTILIZER.	R	L6.2
(ball valve symbol)	NIBCO - T-580-70-66, BRONZE BALL VALVE WITH STAINLESS STEEL STEM AND HANDLE NUT, LINE SIZE PER MAINLINE.	S	L6.2
(valve symbol)	RAIN BIRD - PEB-PRS-D, SERIES (1" OR 1-1/2") PLASTIC REMOTE CONTROL VALVE, SIZE AS SHOWN.	T, LL	L6.2
(drip valve symbol)	RAIN BIRD - PEB, (1" OR 1-1/2") SERIES PLASTIC DRIP REMOTE CONTROL VALVE ASSEMBLY, SIZE AS SHOWN. INSTALLED WITH RAIN BIRD MODEL # LCRBY-S, (1" OR 1-1/2") LARGE CAPACITY SCREEN FILTER WITH MODEL #PSI-H40X (1" OR 1-1/2") 40 PSI., HIGH FLOW INLINE PRESSURE REGULATOR. FOR DEMANDS 1 - 22 GPM: INSTALL 1" VALVE WITH LCRBY100-S, 1" SCREEN FILTER AND PSI-H40X-100, 1", 40 PSI., HIGH FLOW INLINE PRESSURE REGULATOR. FOR DEMANDS 23 - 55 GPM: INSTALL 1-1/2" VALVE WITH LCRBY150-S, 1-1/2" SCREEN FILTER AND PSI-H40X-150, 1-1/2", 40 PSI., HIGH FLOW INLINE PRESSURE REGULATOR.	U, LL	L6.2 L6.3
(quick coupler symbol)	RAIN BIRD - 33DLRC, 3/4" QUICK COUPLER VALVE WITH LOCKING COVER.	Z, LL	L6.2
NO SYMBOL	AS APPROVED - NON-POTABLE WATER SIGN, INSTALL QUANTITY AND LOCATIONS PER CITY / DISTRICT REQUIREMENTS.	N/A	N/A

IRRIGATION CONTROLLER EQUIPMENT LEGEND

SYMBOL	MANUFACTURE / MODEL NO. / DESCRIPTION	DETAIL	SHEET
C	IMPERIAL TECHNICAL SERVICES - RAIN BIRD "ESP-LXD" 2-WIRE DECODER SERIES "ET" BASED CONTROLLER ASSEMBLY. MODEL # ICA6-RB5-200 / IFS-200F / SDI / 26-LSP / 26-GR-K / 110-DEC1 / IQ-GPRS-5YR / RSE / SP. ICA6 = U.L. APPROVED, V.I.T. STRONG BOX, STAINLESS STEEL TOP ENTRY PEDESTAL ENCLOSURE. RB5 = RAIN BIRD "ESP-LXD" 2-WIRE DECODER SERIES, ET / WEATHER BASED SMART CONTROLLER. 200 = QUANTITY OF STATIONS. IFS-200 = 2" (FLOMEC) FLOW METER. SDI = SENSOR DECODER INTERFACE. 26-LSP = LINE SURGE PROTECTION - 1 PER 500' MAXIMUM DISTANCE AND ENDS OF ANY AND ALL END LINE RUNS, SEE PLANS FOR QUANTITY. 26-GR-K = GROUNDING ROD AND CLAMP, 1 PER LSP. 110-DEC1 = ESP-LXD VALVE FIELD DECODERS - (APPROX 110+/-) SEE PLANS FOR QUANTITY. IQ-GPRS-5YR = IQ NETWORK 3G CELLULAR DATA MODEM COMMUNICATION CARTRIDGE WITH ONE (5) YEAR SERVICE PLAN. RSE = RAIN SENSOR. SP = CONTROLLER SURGE PROTECTION. NOTE: FOR FURTHER INFORMATION CONTACT DARYL GREEN AT GREEN PRODUCT SALES (949) 584-7311. THE INSTALLATION OF CONTROLLERS MUST BE APPROVED AND CERTIFIED BY IMPERIAL TECHNICAL SERVICES. PROVIDE COPIES OF CERTIFICATION TO THE OWNER'S AUTHORIZED REPRESENTATIVE AND LANDSCAPE ARCHITECT.	AA	L6.2
RS	IMPERIAL TECHNICAL SERVICES - RAIN SENSOR. INSTALLED WITHIN STAINLESS STEEL VANDAL RESISTANT ENCLOSURE. RAIN SENSOR IS SUPPLIED AS PART OF I.T.S. ASSEMBLY.	AA	L6.2
SP	RAIN BIRD - LSP, LINE SURGE PROTECTOR WITH GROUNDING ROD OR GROUNDING PLATE, PLACED WITHIN 10" ROUND VALVE BOX. LINE SURGE PROTECTION SHALL BE INSTALLED ONE AT CONTROLLER AND EVERY 8 DECODERS OR 500' MAXIMUM DISTANCE OF THE 2-WIRE PATH AND AT ALL DEAD END RUNS. SURGE PROTECTORS ARE SUPPLIED AS PART OF I.T.S. CONTROLLER ASSEMBLY.	DD, EE, FF	L6.2 L6.3
NO SYMBOL	RAIN BIRD - DEC1, SINGLE VALVE, 2-WIRE, FIELD DECODER, MINIMUM ONE (1) DECODER REQUIRED PER REMOTE CONTROL VALVE. CONTRACTOR MAY COMBINE UP TO FOUR (4) VALVES IN A MANIFOLD AND USE, ONE (1) DEC-4, FOUR-STATION DECODER. STAKE ALL VALVE MANIFOLD LOCATIONS IN FIELD TO VERIFY QUANTITY, LOCATION AND TYPE OF DECODERS REQUIRED. INSTALL PER MANUFACTURE RECOMMENDATIONS. DECODERS ARE SUPPLIED AS PART OF I.T.S. CONTROLLER ASSEMBLY.	V, W, X	L6.2
NO SYMBOL	PAIGE ELECTRIC - CONTROLLER GROUNDING: CONTRACTOR SHALL GROUND CONTROLLER AT MINIMUM USING ONE GROUND ROD AND GROUND PLATE, BUT NOT LESS THAN PER LOCAL AND NATIONAL ELECTRICAL CODE. GROUND WIRE AND PLATE / ROD CONNECTIONS SHALL BE BY CADWELD PROCESS ONLY, CLAMPS ARE NOT AN ACCEPTABLE SUBSTITUTE. MAXIMUM GROUND RESISTANCE SHALL BE NO MORE THAN 10 OHM. CONTRACTOR SHALL PROVIDE PROOF OF MEASURED RESISTANCE TO OWNER'S AUTHORIZED REPRESENTATIVE BEFORE MAINTENANCE PERIOD BEGINS AND INCLUDE DOCUMENT WITHIN SUBMITTED OPERATIONS AND MAINTENANCE MANUAL.	BB, CC	L6.2
EL	120 VOLT ELECTRICAL POWER PROVIDED BY ELECTRICIAN, VERIFY ACTUAL LOCATION IN FIELD. THE COORDINATION OF POWER AND CONNECTION OF CONTROLLER SHALL BE THE RESPONSIBILITY OF THE LANDSCAPE CONTRACTOR.	N/A	N/A
CD	CELLULAR DATA CENTRAL CONTROL COMMUNICATION CONNECTION. CONTRACTOR IS RESPONSIBLE FOR THE COORDINATION AND SETUP OF THE CELLULAR DATA SERVICE PLAN WITH STATIC IP ADDRESS FROM CELLULAR SERVICE PROVIDER AND CONFIRM PROPER OPERATION TO THE CENTRAL CONTROL COMPUTER SYSTEM AND WITH THE RAIN BIRD IQ V3.0 CLOUD SOFTWARE. NOTE: WIRELESS COMMUNICATION DEVICES REQUIRE A WIRELESS SITE SURVEY. CONTRACTOR SHALL CONTACT RAIN BIRD AND COORDINATE A SITE SURVEY FOR CONTROLLER COMMUNICATION PRIOR TO ORDERING CONTROLLER ASSEMBLY.	N/A	N/A
MS	IMPERIAL TECHNICAL SERVICES - WS1, IRROMETER WATER SWITCH, SOIL MOISTURE SENSOR KIT. INSTALL MOISTURE SENSOR WITH 2-WIRE SENSOR DECODER AND WIRE TO CONTROLLER. WIRE SOIL MOISTURE SENSOR AND CONTROL VALVE TO CONTROLLER CONTROL VALVE OUTPUT TO INTERRUPT WATERING FOR DESIGNATED BIO-SWALE CONTROL VALVES ONLY. PLACE MOISTURE SENSOR AT LOWEST POINT AT BOTTOM OF BASIN. INSTALL PER MANUFACTURES RECOMMENDATION.	N/A	N/A

NOTE:
1. MAINTAINING CONTRACTOR SHALL BE RESPONSIBLE FOR CONTACTING RAIN BIRD TO SET UP ACCOUNT TO REGISTER CONTROLLER AND ACCESS THROUGH THE WEB ACCESS. CONTRACTOR SHALL PROVIDE AND COORDINATE CELLULAR DATA SERVICE PLAN WITH STATIC IP ADDRESS FROM CELLULAR SERVICE PROVIDER FOR CENTRAL CONTROL COMMUNICATION.
2. CONTRACTOR SHALL CONFIRM QUANTITIES AND PROVIDE ONE SURGE PROTECTION AND GROUND ROD #GR-K OR GROUND PLATE #GP3-K AT A MINIMUM OF ONE PER 500' OF TWO WIRE CABLE AND ENDS OF ALL TERMINAL RUNS PER MANUFACTURER RECOMMENDATIONS.
3. ALL DECODERS SHALL BE PROVIDED WITH THE MANUFACTURER APPROVED WIRE CONNECTOR.
4. CONTRACTOR SHALL PROVIDED 2-WIRE CABLE, #14/2 AWG. 14 GAUGE 2-WIRE CABLE (RED/BLACK) POLYETHYLENE COATED, DOUBLE JACKETED (BLUE). ALL WIRE CABLE SHALL BE INSTALLED WITHIN 1-1/4" PVC ELECTRICAL CONDUIT.
5. INSTALL CONTROLLER, 2-WIRE CABLE, WIRE CONNECTORS, DECODERS AND GROUNDING SURGE PROTECTION AND ALL RELATED EQUIPMENT PER MANUFACTURE RECOMMENDATIONS.
6. CONTRACTOR SHALL COORDINATE A PRE CONSTRUCTION MEETING WITH IMPERIAL TECHNICAL SERVICES PRIOR TO CONSTRUCTION.

FOR IRRIGATION PLANS - SEE SHEET L4.1 - L4.9
FOR IRRIGATION NOTES - SEE SHEET L5.1
FOR IRRIGATION CALCULATIONS - SEE SHEET L5.2
FOR IRRIGATION DETAIL DETAILS - SEE SHEET L6.1 - L6.3
FOR LANDSCAPE DETAILS - SEE SHEET L9.1 - L9.5

IN-LINE DRIP IRRIGATION LEGEND

SYMBOL	MANUFACTURE / MODEL NO. / DESCRIPTION	GPH	PSI	RADIUS	PREC. RATE	DETAIL	SHEET
	RAIN BIRD - XFS-CV-6-12, XFS SUB-SURFACE "COPPER SHIELD" SERIES 17mm, 12" O.C. EMITTER, DRIPLINE WITH PRESSURE COMPENSATING, ANTI SIPHON CHECK VALVE AND COPPER SHIELD ROOT INTRUSION PROTECTION EMITTER.	0.61	30	N/A	0.73	A, B, C, D	L6.1
	RAIN BIRD - DRIPLINE CONNECTIONS SHALL BE MADE USING "XF SERIES" 17mm DRIPLINE INSERT FITTINGS. INSTALL STAINLESS STEEL CLAMPS ON FITTINGS FOR ANY SYSTEM THAT EXCEEDS 50 PSI.					E	L6.1
FV	HUNTER - ECO-ID, POP-UP DRIP SYSTEM COMBINATION DRIP INDICATOR / FLUSH VALVE. INSTALL WITH "GPH" IRRIGATION PRODUCTS MODEL #GDFN, SERIES FLUSH NOZZLE.					F	L6.1
F	HUNTER - AFV-T, 1/2" THREADED AUTOMATIC FLUSH VALVE. LOCATE AT END OF DRIP ZONE IN EACH DIRECTION. INSTALL INSIDE A 10" ROUND VALVE BOX 18" FROM PAVING.					G	L6.1

DRIP NOTES:
A. SUB-SURFACE IN-LINE DRIP TUBING SHALL BE INSTALLED @ 16" MAXIMUM ROW SPACING FOR TYPICAL SHRUB AREAS. INSTALL TUBING WITH TRIANGULAR SPACED EMITTER LAYOUT, 2" BELOW FINISH SOIL GRADE, ANCHORED WITH RAIN BIRD 6" GALVANIZED WIRE STAKES, MODEL #TDS-050 BEND, INSTALLED FOUR (4) FEET ON CENTER.

B. INSTALL PERIMETER TUBING MAXIMUM 6" FROM PERIMETER EDGE FOR GROUNDCOVER AREAS OR AT FIRST LINE OF SHRUBS. CONTRACTOR SHALL DETERMINE MINIMUM ROW SPACING IN THE FIELD AFTER REVIEW OF PLANT SPACING FOR EACH PLANTER. EACH AND EVERY SHRUB SHALL RECEIVE WATER FROM A MINIMUM OF TWO INLINE DRIP EMITTERS. AREAS OF TIGHTLY SPACED GROUNDCOVER OR SANDY SOILS WILL REQUIRE CLOSER ROW SPACING. FOR ANY 'SINGLE' OR' DOUBLE' ROW TYPE PLANTINGS, INSTALL DRIP TUBING ON BOTH SIDES OF THE SHRUB ROW TO IRRIGATE SHRUBS ON EITHER SIDE. DUE TO SOIL STRATA DIFFERENCES AND POSSIBLE COMPACTION CONTRACTOR SHALL FIELD VERIFY PRIOR TO STARTING WORK AND BEFORE BACKFILLING THAT THE FINAL LAYOUT AND ROW SPACING WILL PROVIDE ADEQUATE WATER TO ALL PLANTS.

SPRAY HEAD SPRINKLER LEGEND

SYMBOL Q	H	F	V	MANUFACTURE / MODEL NO. / DESCRIPTION	FLOW RATE GPM Q	H	F	V	PSI	RADIUS	PREC. RATE	DETAIL	SHEET
				SHRUB 12" HI-POP SPRAY HEADS WITH CHECK VALVE AND PRESSURE REGULATION									
		--		RAIN BIRD - 1812-SAM-PRS, W/ 8-FLT SERIES NOZZLE W/ PCS SCREENS, 020 / 025 / 025	.20	.25	--	.25	30	5 FT	1.6	H	L6.1
				RAIN BIRD - 1812-SAM-PRS, W/ 8 SERIES MPR NOZZLE	.26	.52	1.05	1.19	30	8 FT	1.6	H	L6.1
				RAIN BIRD - 1812-SAM-PRS, W/ 10 SERIES MPR NOZZLE	.39	.79	1.58	1.45	30	10 FT	1.6	H	L6.1
				RAIN BIRD - 1812-SAM-PRS, W/ 12 SERIES MPR NOZZLE	.65	1.30	2.60	1.18	30	12 FT	1.7	H	L6.1
				RAIN BIRD - 1812-SAM-PRS, W/ 15 SERIES MPR NOZZLE	.92	1.85	3.70	1.85	30	15 FT	1.6	H	L6.1
L/RCS	SST	CST		RAIN BIRD - 1812-SAM-PRS, W/ 15 STRIP SERIES NOZZLE LCS-PCS-030 / RCS-PCS-030 / SST-PCS-060 / CST-PCS-060.	.30	.90	.90	--	30	4x15 FT 4x30 FT	1.9	H	L6.1
			--	RAIN BIRD - 1812-SAM-PRS, W/ SQ SERIES NOZZLE.	.12	.20	.40	--	30	2-4 FT	1.6	H	L6.1

NOTE: ALL SPRAY HEADS THAT REQUIRE ARC ADJUSTMENT FOR OVERSPRAY SHALL BE INSTALLED WITH RAIN BIRD (HE-VAN) HIGH-EFFICIENCY VARIABLE ARC SPRAY NOZZLES. FOR RADIUS REDUCTION USE RAIN BIRD PCS-SCREENS.

IRRIGATION ROTATOR HEAD SPRINKLER LEGEND

SYMBOL Q	H	F	MANUFACTURE / MODEL NO. / DESCRIPTION	FLOW RATE GPM Q	H	F	PSI	RADIUS	PREC. RATE	DETAIL	SHEET
			SHRUB ROTATOR HEADS WITH CHECK VALVE AND PRESSURE REGULATION								
1			RAIN BIRD - 1812-SAM-P45, W/ HUNTER ROTATOR SERIES MP CORNER NOZZLE.	.17	--	--	40	8-12 FT	.45	H	L6.1
4	5	6	RAIN BIRD - 1812-SAM-P45, W/ HUNTER ROTATOR SERIES MP 1000 NOZZLE.	.18	.35	.65	40	8-12 FT	.45	H	L6.1
7	8	9	RAIN BIRD - 1812-SAM-P45, W/ HUNTER ROTATOR SERIES MP 2000 NOZZLE.	.33	.63	1.27	40	13-17 FT	.45	H	L6.1
10	11	12	RAIN BIRD - 1812-SAM-P45, W/ HUNTER ROTATOR SERIES MP 3000 NOZZLE.	.74	1.84	3.15	40	19-27 FT	.45	H	L6.1
13	14		RAIN BIRD - 1812-SAM-P45, W/ HUNTER ROTATOR SERIES MP MPLCS515 / MPRCS515 / MPSS530 NOZZLE.	.19	.19	.38	40	4x14 FT 4x28 FT	.45	H	L6.1
1			HUNTER - MP ROTATOR SERIES CORNER NOZZLE ON PVC RISER WITH PROS-00-PRS40 SHRUB ADAPTER.	.17	--	--	40	8-12 FT	.45	I	L6.1
4	5	6	HUNTER - MP ROTATOR SERIES 1000 NOZZLE ON PVC RISER WITH PROS-00-PRS40 SHRUB ADAPTER.	.18	.35	.65	40	8-12 FT	.45	I	L6.1
7	8	9	HUNTER - MP ROTATOR SERIES 2000 NOZZLE ON PVC RISER WITH PROS-00-PRS40 SHRUB ADAPTER.	.33	.63	1.27	40	13-17 FT	.45	I	L6.1
10	11	12	HUNTER - MP ROTATOR SERIES 3000 NOZZLE ON PVC RISER WITH PROS-00-PRS40 SHRUB ADAPTER.	.74	1.84	3.15	40	19-27 FT	.45	I	L6.1
13	14		HUNTER - MP ROTATOR SERIES MPLCS515 / MPRCS515 / MPSS530 NOZZLE ON PVC RISER WITH PROS-00-PRS40 SHRUB ADAPTER.	.19	.19	.38	40	4x14 FT 4x28 FT	.45	I	L6.1

NOTE: MULTI-STREAM ROTARY SPRINKLERS INSTALLED FARTHER THAN FIVE (5) FEET FROM PAVING, CURBS, SIDEWALKS, STEPS, TURF BOUNDARIES OR OTHER PEDESTRIAN AREAS MAY BE INSTALLED ON RISER W/ HUNTER PROS-00-PRS40, PRESSURE REGULATED SHRUB ADAPTER WITH HUNTER "HCV" SERIES ANTI-DRAIN CHECK VALVE WITH NOZZLE AS SHOWN.

NOTE: POP-UP SPRINKLER HEADS WITH ELEVATION CHANGES OF 10 FEET OR GREATER FROM HIGHEST HEAD IN ZONE OR SPRINKLER ON RISER WITH ANY POTENTIAL OF LOW HEAD DRAINAGE WILL REQUIRE THE INSTALLATION OF A SPRING-TYPE ANTI-DRAIN CHECK VALVE. ABSOLUTELY NO LOW HEAD DRAINAGE ALLOWED.

IRRIGATION ROTOR HEAD SPRINKLER LEGEND

SYMBOL Q	H	F	MANUFACTURE / MODEL NO. / DESCRIPTION	FLOW RATE GPM Q	H	F	PSI	RADIUS	PREC. RATE	DETAIL	SHEET
			12" POP-UP ROTOR HEAD WITH CHECK VALVE AND PRESSURE REGULATION								
1	2	3	HUNTER - PGP-12-CV, ULTRA SERIES, 12" POP-UP SHRUB ROTOR HEAD W/ NOZZLES Q-.50SR/H-1.0SR/F-2.0SR	.43	.90	1.7	35	16 FT	0.46	H	L6.1
4	5	6	HUNTER - PGP-12-CV, ULTRA SERIES, 12" POP-UP SHRUB ROTOR HEAD W/ NOZZLES Q-.75SR/H-1.5SR/F-3.0SR	.68	1.3	2.7	35	20 FT	0.46	H	L6.1
7	8	9	HUNTER - PGP-12-CV, ULTRA SERIES, 12" POP-UP SHRUB ROTOR HEAD W/ NOZZLES Q-1.5 / H-2.5 / F-5.0	1.4	2.1	3.5	35	25 FT	0.46	H	L6.1
10	11	12	HUNTER - PGP-12-CV, ULTRA SERIES, 12" POP-UP SHRUB ROTOR HEAD W/ NOZZLES Q-2.0 / H-3.0 / F-6.0	1.7	2.7	5.6	35	30 FT	0.46	H	L6.1
13	14	15	HUNTER - PGP-12-CV, ULTRA SERIES, 12" POP-UP SHRUB ROTOR HEAD W/ NOZZLES Q-2.5 / H-4.0 / F-8.0	2.1	3.5	7.0	35	35 FT	0.46	H	L6.1
16	17	18	HUNTER - PGP-12-CV, ULTRA SERIES, 12" POP-UP SHRUB ROTOR HEAD W/ RED NOZZLES Q-8 / H-10 / F-12	3.7	6.0	10.5	40	40 FT	0.46	J	L6.1
1	2	3	HUNTER - PGP-00, ULTRA SERIES, SHRUB ROTOR HEAD ON RISER W/ NOZZLES Q-.50SR/H-1.0SR/F-2.0SR	.43	.90	1.7	35	16 FT	0.46	J	L6.1
4	5	6	HUNTER - PGP-00, ULTRA SERIES, SHRUB ROTOR HEAD ON RISER W/ NOZZLES Q-.75SR/H-1.5SR/F-3.0SR	.68	1.3	2.7	35	20 FT	0.46	J	L6.1
7	8	9	HUNTER - PGP-00, ULTRA SERIES, SHRUB ROTOR HEAD ON RISER W/ NOZZLES Q-1.5 / H-2.5 / F-5.0	1.4	2.1	3.5	35	25 FT	0.46	J	L6.1
10	11	12	HUNTER - PGP-00, ULTRA SERIES, SHRUB ROTOR HEAD ON RISER W/ NOZZLES Q-2.0 / H-3.0 / F-6.0	1.7	2.7	5.6	35	30 FT	0.46	J	L6.1
13	14	15	HUNTER - PGP-00, ULTRA SERIES, SHRUB ROTOR HEAD ON RISER W/ NOZZLES Q-2.5 / H-4.0 / F-8.0	2.1	3.5	7.0	35	35 FT	0.46	J	L6.1
16	17	18	HUNTER - PGP-00, ULTRA SERIES, SHRUB ROTOR HEAD ON RISER W/ RED NOZZLES Q-8 / H-10 / F-12	3.7	6.0	10.5	40	40 FT	0.46	J	L6.1

NOTE: HUNTER ULTRA SERIES ROTOR REQUIRE THE INSTALLATION OF THE HUNTER HSJ-0 (3/4") MODEL COMMERCIAL SWING JOINT ASSEMBLY WITH EACH HEAD.

NOTE: NOZZLES NUMBERS WITHIN THE ROTOR HEAD SYMBOLS DO NOT EXACTLY CORRESPOND TO THE HUNTER NOZZLE NUMBERS. NOZZLE NUMBERS FOR QUARTER, HALF, AND FULL HEADS ARE SHOW WITHIN THE HEAD MODEL NUMBER AS SHOWN IN THE LEGEND.

NOTE: SHRUB ROTOR HEADS INSTALLED FARTHER THAN FIVE (5) FEET FROM PAVING, CURBS, SIDEWALKS, STEPS, TURF BOUNDARIES OR OTHER PEDESTRIAN AREAS MAY BE INSTALLED AS A HUNTER PGP-00 SHRUB ROTOR ON RISER W/ HUNTER "HCV" SERIES 3/4" ANTI-DRAIN CHECK VALVE WITH NOZZLE AS SHOWN.

NOTE: SPRAY HEADS WITH ELEVATION CHANGES OF 10 FEET OR GREATER FROM HIGHEST HEAD IN ZONE OR HEADS WITH POTENTIAL OF LOW HEAD DRAINAGE WILL REQUIRE THE INSTALLATION OF A SPRING-TYPE ANTI-DRAIN CHECK VALVE. ABSOLUTELY NO LOW HEAD DRAINAGE ALLOWED.

NOTE: CENTER ROW FULL CIRCLE ROTOR HEADS ON SLOPE SHALL BE INSTALLED 6% - 8% OFF-SET UP SLOPE FROM CENTER TO PROVIDE FULL COVERAGE AT TOP OF SLOPE WITH NO OVERSPRAY AT BOTTOM OF SLOPE.

IRRIGATION TREE BUBBLER LEGEND

SYMBOL	MANUFACTURE / MODEL NO. / DESCRIPTION	GPM	PSI	RADIUS	PREC. RATE	DETAIL	SHEET
(bubbler symbol)	RAIN BIRD - 1806-SAM-PRS, W/ HUNTER MSBN-25Q, MULTI-STREAM BUBBLER NOZZLE.	.30 (.60)	30	3 FT	1.8	K	L6.1
(deep well bubbler symbol)	RAIN BIRD - RWS-B-C-1401-RWS-SOCK DEEP WELL BUBBLER.	.25 (0.5)	30	N/A	1.8	L	L6.1

NOTE: SINGLE SYMBOL ON PLANS REPRESENTS TWO (2) BUBBLERS PER TREE.
PLACE BUBBLERS AT EDGE OF ROOTBALL ON OPPOSITE SIDES OF TREE WITHIN TREE WELL TYPICAL.

RGA
Office of Architectural Design
15231 Alton Parkway, Suite 100
Irvine, CA 92618
T 949-341-0920
FX 949-341-0922

CONSULTANT
RLA
8841 RESEARCH DR
SUITE 200
IRVINE • CA 92618
949.387.1323
RIDGELA.COM

PROFESSIONAL SEALS
REGISTERED LANDSCAPE ARCHITECT
JAMES J. RIDGE
LIC. #2809
(Signature) 6/15/20
(Date)
05/31/21
(Exp. Date)
STATE OF CALIFORNIA

PROJECT NAME
LBA LOGISTIC CENTER III
14800 W. SCHULTE ROAD, TRACY, CA

LBA REALTY
LBA REALTY
3347 MICHELSON DRIVE, SUITE 200
IRVINE, CA 92612
D: 949-955-9333, C: 818-919-5336

MARK	DATE	DESCRIPTION
	06/15/20	1st COUNTY SUBMITTAL

RGA PROJECT NO:	19071.00
OWNER PROJECT NO:	00000.00
CAD FILE NAME:	--
DRAWN BY:	RLA
CHK'D BY:	RLA

COPYRIGHT
RGA, OFFICE OF ARCHITECTURAL DESIGN

SHEET TITLE
IRRIGATION LEGENDS

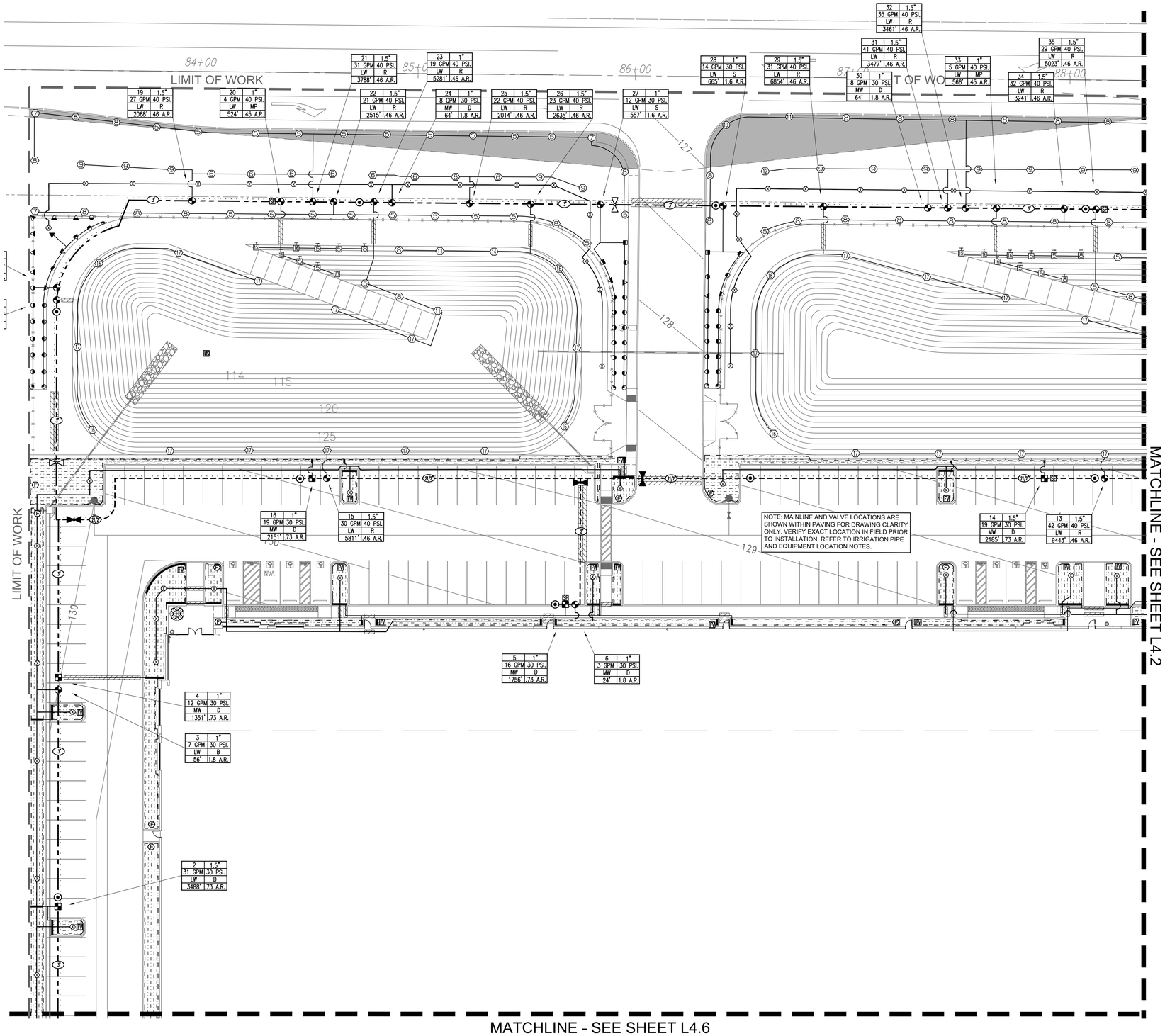

IRRIGATION PIPE AND EQUIPMENT LOCATION NOTES

1. ALL IRRIGATION EQUIPMENT, SPRINKLERS AND PIPE THAT ARE SHOWN IN PAVING IS FOR DRAWING CLARITY ONLY. ALL EQUIPMENT SHALL BE INSTALLED WITHIN LANDSCAPED AREA. NO IRRIGATION EQUIPMENT SHALL BE LOCATED IN HARDSCAPE.
2. MAINLINE AND VALVE LOCATIONS SHOWN ON THIS DRAWING ARE DESIGNED AS DIAGRAMMATIC AND APPROXIMATE. THE LANDSCAPE CONTRACTOR SHALL STAKE ALL IRRIGATION PIPE / APPURTENANCE LOCATION FOR REVIEW AND APPROVAL. FINAL LOCATION AND EXACT POSITIONING OF ALL IRRIGATION SHALL BE DETERMINED BY THE OWNER'S AUTHORIZED REPRESENTATIVE. MINOR MODIFICATIONS OF ALL IRRIGATION APPURTENANCE AS REQUESTED BY THE OWNER SHALL BE PROVIDED BY THE CONTRACTOR AT NO ADDITIONAL COST. FAILURE TO OBTAIN OWNER'S APPROVAL PRIOR TO THE INSTALLATION SHALL CAUSE THE CONTRACTOR TO MAKE OWNER DIRECTED REVISION AT NO CHARGE. ALL PIPING AND WIRES SHALL BE SLEEVED UNDER PAVING, HARDSCAPE, ETC. AND AS DIRECTED BY OWNER'S AUTHORIZED REPRESENTATIVE.

IRRIGATION VALVE CALLOUT

CONTROLLER LETTER / VALVE NUMBER — A2 | 1.5" — VALVE SIZE
GALLONS PER MINUTE G.P.M. — 16 GPM | 30 PSI. — OPERATING PRESSURE (P.S.I.)
HYDROZONE PLANT FACTOR — LW | D — HYDROZONE / IRRIGATION TYPE - SEE HYDROZONE LEGEND (BELOW)
LANDSCAPE HYDROZONE AREA SQUARE FOOTAGE — 2000' | .73 A.R. — APPLICATION RATE IN INCHES PER HOUR

HYDROZONE LEGEND

Hydrozone Number
(1) Drip - Low Water / Plants
(2) Drip - Moderate Water / Plants
(3) Rotator - Low Water / Plants
(4) Rotor - Low Water / Plants
(5) Bubbler - Low Water / Trees
(6) Bubbler - Moderate Water / Trees

Plant Factor (Water Use) - from WUCOLS
Selected based on type of plants in hydrozones:
VLW = 0.1 - Very Low Water Use Plants
LW = 0.1 - 0.3 - Low Water Use Plants
MW = 0.4 - 0.6 - Moderate Water Use Plants
HW = 0.7 - 0.9 - High Water Use Plants

IE - Irrigation Efficiency
S = Spray .71
MP = Rotary .73
R = Rotor .73
B = Bubbler .77
D = Drip .81

IRRIGATION NOTE CALLOUT

(1) — IRRIGATION CONSTRUCTION CALLOUT NUMBER.
[1] — P.O.C. AND CONTROLLER CALLOUT NUMBER.

LATERAL PIPE SIZING CHART		
0 TO 5	GPM	3/4" SCH. 40 PVC PIPE
6 TO 10	GPM	1" SCH. 40 PVC PIPE
11 TO 15	GPM	1-1/4" SCH. 40 PVC PIPE
16 TO 25	GPM	1-1/2" SCH. 40 PVC PIPE
26 TO 35	GPM	2" SCH. 40 PVC PIPE
36 TO 50	GPM	2-1/2" SCH. 40 PVC PIPE
51 TO 75	GPM	3" SCH. 40 PVC PIPE

DRIPLINE INTAKE/EXHAUST HEADER PIPE SIZING CHART	
INTAKE/EXHAUST HEADER MINIMUM SIZE OF 3/4 INCH.	
FLOW RANGE	**MINIMUM SIZE OF EXHAUST HEADER**
0 THROUGH 5 GPM	MINIMUM SIZE SHALL BE 3/4 INCH
6 THROUGH 10 GPM	MINIMUM SIZE SHALL BE 1 INCH
11 THROUGH 15 GPM	MINIMUM SIZE SHALL BE 1-1/4 INCH
16 THROUGH 25 GPM	MINIMUM SIZE SHALL BE 1-1/2 INCH
26 THROUGH 50 GPM	MINIMUM SIZE SHALL BE 2 INCH
NOTE: CONTRACTOR SHALL SIZE ALL DRIPLINE INTAKE/EXHAUST HEADERS PER PIPE SIZING CHART, IN NO INSTANCE SHALL PIPE SIZE EXCEED DESIGNATED GPM RANGE.	

FOR IRRIGATION LEGEND - SEE SHEET L4.0
FOR IRRIGATION NOTES - SEE SHEET L5.1
FOR IRRIGATION CALCULATIONS - SEE SHEET L5.2
FOR IRRIGATION DETAIL DETAILS - SEE SHEET L6.1 - L6.3
FOR LANDSCAPE DETAILS - SEE SHEET L9.1 - L9.5

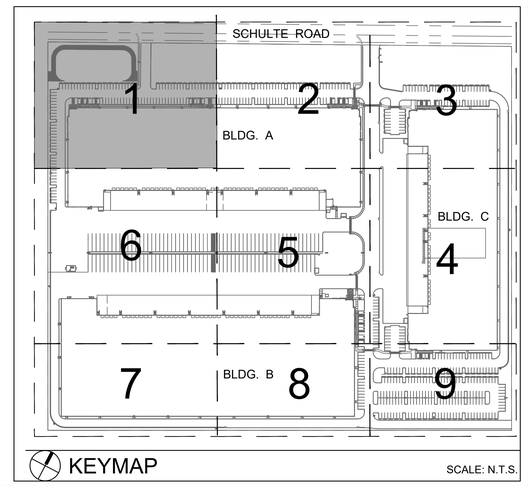

0 10 20 40 60

RGA
Office of Architectural Design
15231 Alton Parkway, Suite 100
Irvine, CA 92618
T 949-341-0920
FX 949-341-0922

CONSULTANT

RLA
8841 RESEARCH DR
SUITE 200
IRVINE • CA 92618
949.387.1323
RIDGELA.COM

PROFESSIONAL SEALS

REGISTERED LANDSCAPE ARCHITECT — JAMES S. J. RIDGE — No. 4220 — 5/15/21 (Orig.) — 05/31/21 (Exp. Date) — STATE OF CALIFORNIA

PROJECT NAME

LBA LOGISTIC CENTER III

14800 W. SCHULTE ROAD, TRACY, CA

LBA REALTY

LBA REALTY
3347 MICHELSON DRIVE, SUITE 200
IRVINE, CA 92612

D: 949-955-9333, C: 818-919-5336

MARK	DATE	DESCRIPTION
	06/15/20	1st COUNTY SUBMITTAL

RGA PROJECT NO:	19071.00
OWNER PROJECT NO:	00000.00
CAD FILE NAME:	--
DRAWN BY:	RLA
CHK'D BY:	RLA

COPYRIGHT
RGA, OFFICE OF ARCHITECTURAL DESIGN

SHEET TITLE
IRRIGATION PLAN

SHEET: L4.1

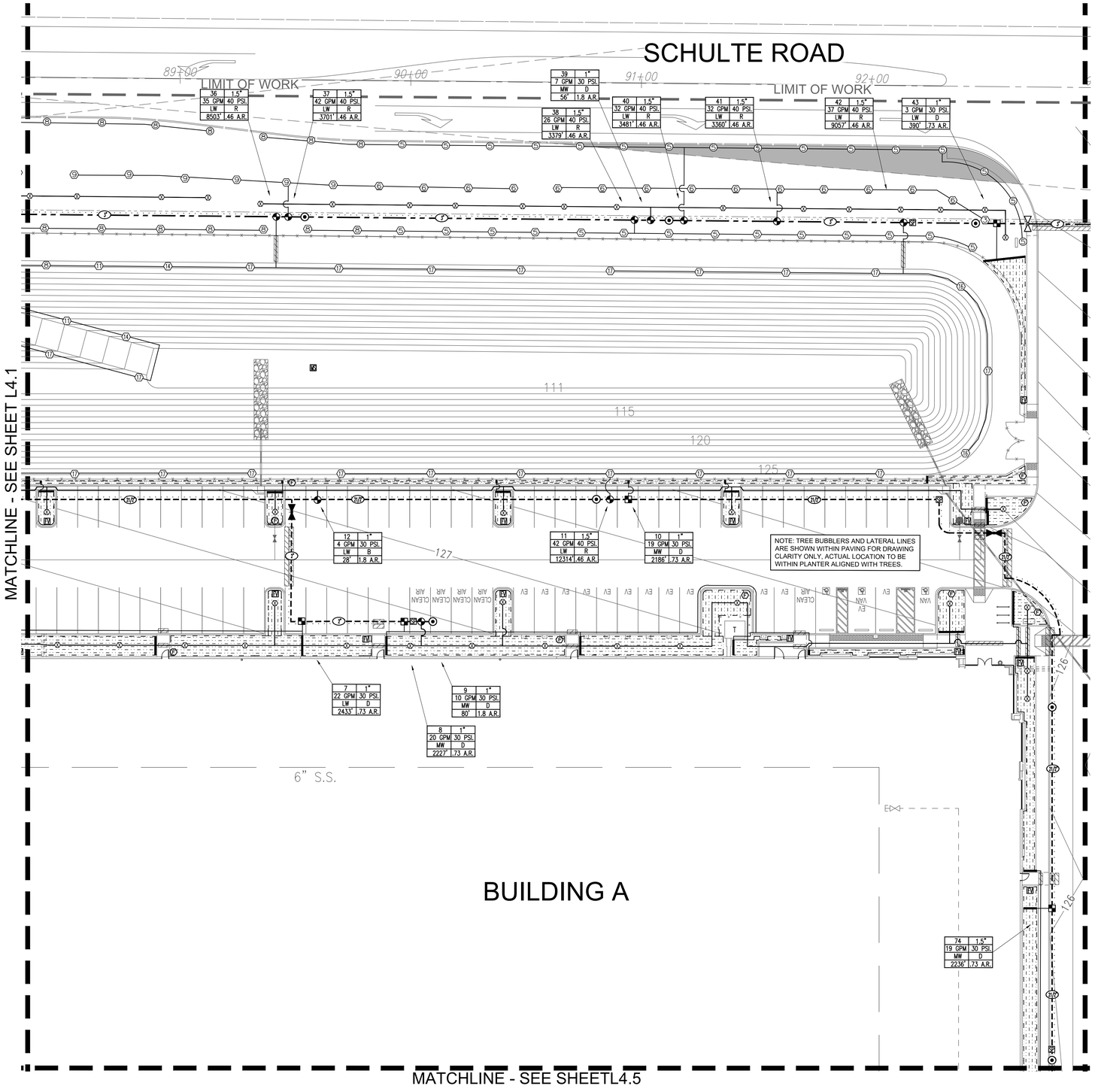

IRRIGATION PIPE AND EQUIPMENT LOCATION NOTES

1. ALL IRRIGATION EQUIPMENT, SPRINKLERS AND PIPE THAT ARE SHOWN IN PAVING IS FOR DRAWING CLARITY ONLY. ALL EQUIPMENT SHALL BE INSTALLED WITHIN LANDSCAPED AREA. NO IRRIGATION EQUIPMENT SHALL BE LOCATED IN HARDSCAPE.
2. MAINLINE AND VALVE LOCATIONS SHOWN ON THIS DRAWING ARE DESIGNED AS DIAGRAMMATIC AND APPROXIMATE. THE LANDSCAPE CONTRACTOR SHALL STAKE ALL IRRIGATION PIPE / APPURTENANCE LOCATION FOR REVIEW AND APPROVAL. FINAL LOCATION AND EXACT POSITIONING OF ALL IRRIGATION SHALL BE DETERMINED BY THE OWNER'S AUTHORIZED REPRESENTATIVE. MINOR MODIFICATIONS OF ALL IRRIGATION APPURTENANCE AS REQUESTED BY THE OWNER SHALL BE PROVIDED BY THE CONTRACTOR AT NO ADDITIONAL COST. FAILURE TO OBTAIN OWNER'S APPROVAL PRIOR TO THE INSTALLATION SHALL CAUSE THE CONTRACTOR TO MAKE OWNER DIRECTED REVISION AT NO CHARGE. ALL PIPING AND WIRES SHALL BE SLEEVED UNDER PAVING, HARDSCAPE, ETC. AND AS DIRECTED BY OWNER'S AUTHORIZED REPRESENTATIVE.

IRRIGATION VALVE CALLOUT

CONTROLLER LETTER / VALVE NUMBER — A2 | 1.5" — VALVE SIZE
GALLONS PER MINUTE G.P.M. — 16 GPM | 30 PSI. — OPERATING PRESSURE (P.S.I.)
HYDROZONE PLANT FACTOR — LW | D — HYDROZONE / IRRIGATION TYPE - SEE HYDROZONE LEGEND (BELOW)
LANDSCAPE HYDROZONE AREA SQUARE FOOTAGE — 2000' | .73 A.R. — APPLICATION RATE IN INCHES PER HOUR

HYDROZONE LEGEND

Hydrozone Number	Plant Factor (Water Use) - from WUCOLS Selected based on type of plants in hydrozones:	IE - Irrigation Efficiency
(1) Drip - Low Water / Plants	VLW = 0.1 - Very Low Water Use Plants	S = Spray .71
(2) Drip - Moderate Water / Plants	LW = 0.1 - 0.3 - Low Water Use Plants	MP = Rotary .73
(3) Rotator - Low Water / Plants	MW = 0.4 - 0.6 - Moderate Water Use Plants	R = Rotor .73
(4) Rotor - Low Water / Plants	HW = 0.7 - 0.9 - High Water Use Plants	B = Bubbler .77
(5) Bubbler - Low Water / Trees		D = Drip .81
(6) Bubbler - Moderate Water / Trees		

IRRIGATION NOTE CALLOUT

(1) — IRRIGATION CONSTRUCTION CALLOUT NUMBER.
[1] — P.O.C. AND CONTROLLER CALLOUT NUMBER.

LATERAL PIPE SIZING CHART		
0 TO 5	GPM	3/4" SCH. 40 PVC PIPE
6 TO 10	GPM	1" SCH. 40 PVC PIPE
11 TO 15	GPM	1-1/4" SCH. 40 PVC PIPE
16 TO 25	GPM	1-1/2" SCH. 40 PVC PIPE
26 TO 35	GPM	2" SCH. 40 PVC PIPE
36 TO 50	GPM	2-1/2" SCH. 40 PVC PIPE
51 TO 75	GPM	3" SCH. 40 PVC PIPE

DRIPLINE INTAKE/EXHAUST HEADER PIPE SIZING CHART	
INTAKE/EXHAUST HEADER MINIMUM SIZE OF 3/4 INCH.	
FLOW RANGE	**MINIMUM SIZE OF EXHAUST HEADER**
0 THROUGH 5 GPM	MINIMUM SIZE SHALL BE 3/4 INCH
6 THROUGH 10 GPM	MINIMUM SIZE SHALL BE 1 INCH
11 THROUGH 15 GPM	MINIMUM SIZE SHALL BE 1-1/4 INCH
16 THROUGH 25 GPM	MINIMUM SIZE SHALL BE 1-1/2 INCH
26 THROUGH 50 GPM	MINIMUM SIZE SHALL BE 2 INCH
NOTE: CONTRACTOR SHALL SIZE ALL DRIPLINE INTAKE/EXHAUST HEADERS PER PIPE SIZING CHART, IN NO INSTANCE SHALL PIPE SIZE EXCEED DESIGNATED GPM RANGE.	

0 10 20 40 60

FOR IRRIGATION LEGEND - SEE SHEET L4.0
FOR IRRIGATION NOTES - SEE SHEET L5.1
FOR IRRIGATION CALCULATIONS - SEE SHEET L5.2
FOR IRRIGATION DETAIL DETAILS - SEE SHEET L6.1 - L6.3
FOR LANDSCAPE DETAILS - SEE SHEET L9.1 - L9.5

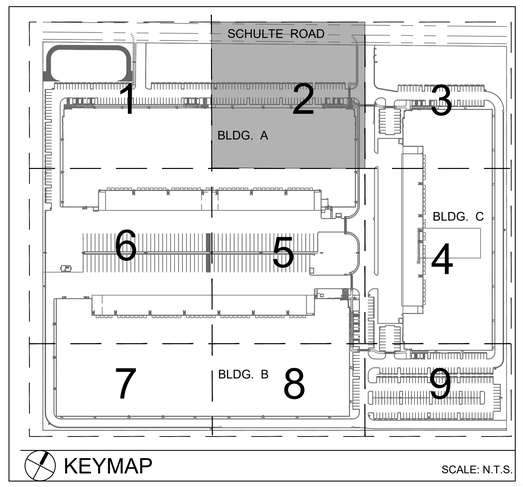

RGA
Office of Architectural Design
15231 Alton Parkway, Suite 100
Irvine, CA 92618
T 949-341-0920
FX 949-341-0922

CONSULTANT

RLA
8841 RESEARCH DR
SUITE 200
IRVINE • CA 92618
949.387.1323
RIDGELA.COM

PROFESSIONAL SEALS

REGISTERED LANDSCAPE ARCHITECT — JAMES J. A. RIDGE — No. 4209 — 5/15/21 (orig) 05/31/21 (rev. date) — STATE OF CALIFORNIA

PROJECT NAME

LBA LOGISTIC CENTER III

14800 W. SCHULTE
ROAD, TRACY, CA

LBA REALTY

LBA REALTY
3347 MICHELSON DRIVE, SUITE 200
IRVINE, CA 92612
D: 949-955-9333, C: 818-919-5336

MARK	DATE	DESCRIPTION
	06/15/20	1st COUNTY SUBMITTAL

RGA PROJECT NO:	19071.00
OWNER PROJECT NO:	00000.00
CAD FILE NAME:	--
DRAWN BY:	RLA
CHK'D BY:	RLA

COPYRIGHT
RGA, OFFICE OF ARCHITECTURAL DESIGN

SHEET TITLE
IRRIGATION PLAN

SHEET: L4.2

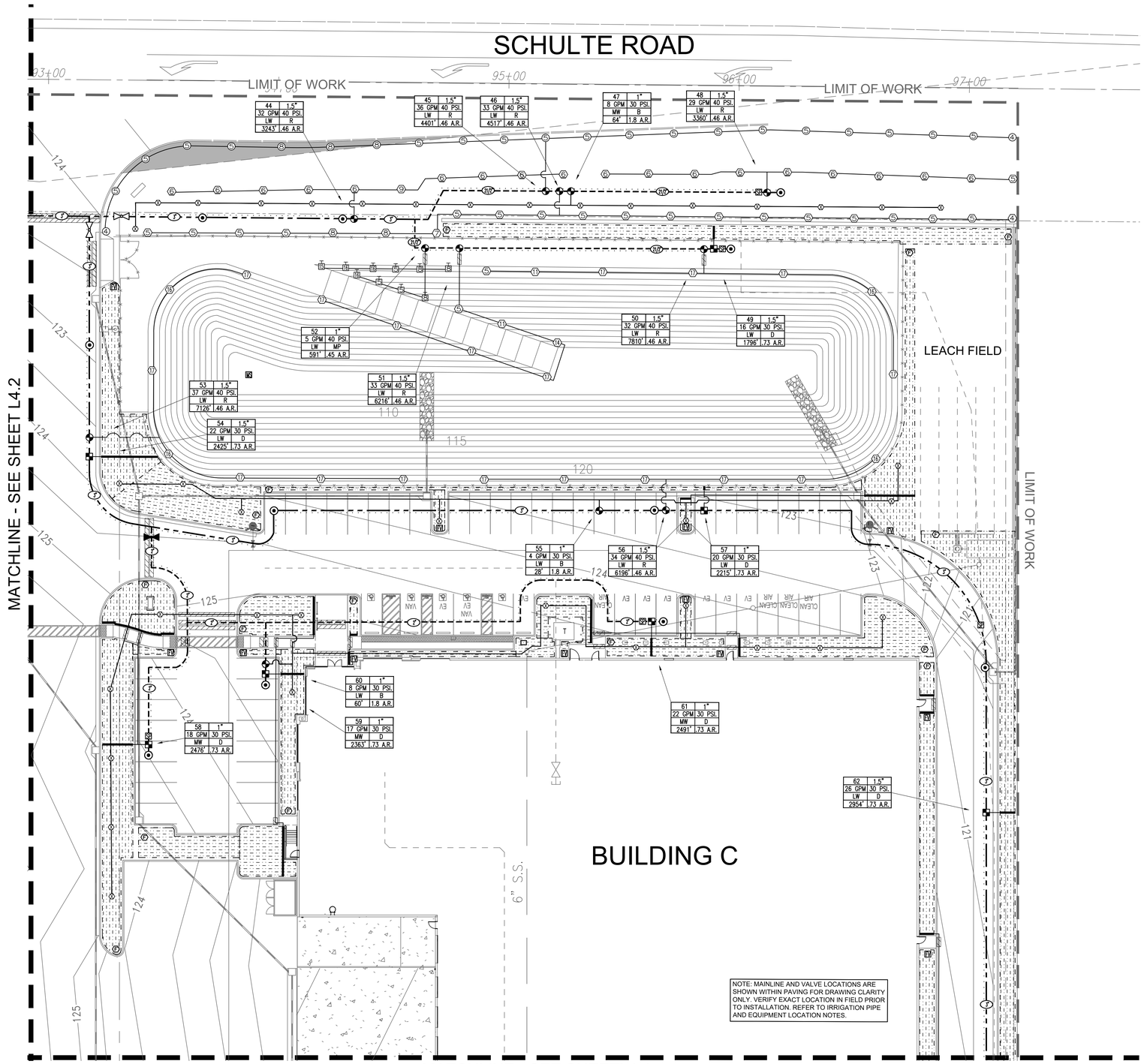

IRRIGATION PIPE AND EQUIPMENT LOCATION NOTES

1. ALL IRRIGATION EQUIPMENT, SPRINKLERS AND PIPE THAT ARE SHOWN IN PAVING IS FOR DRAWING CLARITY ONLY. ALL EQUIPMENT SHALL BE INSTALLED WITHIN LANDSCAPED AREA. NO IRRIGATION EQUIPMENT SHALL BE LOCATED IN HARDSCAPE.
2. MAINLINE AND VALVE LOCATIONS SHOWN ON THIS DRAWING ARE DESIGNED AS DIAGRAMMATIC AND APPROXIMATE. THE LANDSCAPE CONTRACTOR SHALL STAKE ALL IRRIGATION PIPE / APPURTENANCE LOCATION FOR REVIEW AND APPROVAL. FINAL LOCATION AND EXACT POSITIONING OF ALL IRRIGATION SHALL BE DETERMINED BY THE OWNER'S AUTHORIZED REPRESENTATIVE. MINOR MODIFICATIONS OF ALL IRRIGATION APPURTENANCE AS REQUESTED BY THE OWNER SHALL BE PROVIDED BY THE CONTRACTOR AT NO ADDITIONAL COST. FAILURE TO OBTAIN OWNER'S APPROVAL PRIOR TO THE INSTALLATION SHALL CAUSE THE CONTRACTOR TO MAKE OWNER DIRECTED REVISION AT NO CHARGE. ALL PIPING AND WIRES SHALL BE SLEEVED UNDER PAVING, HARDSCAPE, ETC. AND AS DIRECTED BY OWNER'S AUTHORIZED REPRESENTATIVE.

IRRIGATION VALVE CALLOUT

CONTROLLER LETTER / VALVE NUMBER — A2 | 1.5" — VALVE SIZE
GALLONS PER MINUTE G.P.M. — 16 GPM | 30 PSI. — OPERATING PRESSURE (P.S.I.)
HYDROZONE PLANT FACTOR — LW | D — HYDROZONE / IRRIGATION TYPE - SEE HYDROZONE LEGEND (BELOW)
LANDSCAPE HYDROZONE AREA SQUARE FOOTAGE — 2000' | .73 A.R. — APPLICATION RATE IN INCHES PER HOUR

HYDROZONE LEGEND

Hydrozone Number	Plant Factor (Water Use) - from WUCOLS Selected based on type of plants in hydrozones:	IE - Irrigation Efficiency
(1) Drip - Low Water / Plants	VLW = 0.1 - Very Low Water Use Plants	S = Spray .71
(2) Drip - Moderate Water / Plants	LW = 0.1 - 0.3 - Low Water Use Plants	MP = Rotary .73
(3) Rotator - Low Water / Plants	MW = 0.4 - 0.6 - Moderate Water Use Plants	R = Rotor .73
(4) Rotor - Low Water / Plants	HW = 0.7 - 0.9 - High Water Use Plants	B = Bubbler .77
(5) Bubbler - Low Water / Trees		D = Drip .81
(6) Bubbler - Moderate Water / Trees		

IRRIGATION NOTE CALLOUT

(1) — IRRIGATION CONSTRUCTION CALLOUT NUMBER.
[1] — P.O.C. AND CONTROLLER CALLOUT NUMBER.

LATERAL PIPE SIZING CHART		
0 TO 5	GPM	3/4" SCH. 40 PVC PIPE
6 TO 10	GPM	1" SCH. 40 PVC PIPE
11 TO 15	GPM	1-1/4" SCH. 40 PVC PIPE
16 TO 25	GPM	1-1/2" SCH. 40 PVC PIPE
26 TO 35	GPM	2" SCH. 40 PVC PIPE
36 TO 50	GPM	2-1/2" SCH. 40 PVC PIPE
51 TO 75	GPM	3" SCH. 40 PVC PIPE

DRIPLINE INTAKE/EXHAUST HEADER PIPE SIZING CHART	
INTAKE/EXHAUST HEADER MINIMUM SIZE OF 3/4 INCH.	
FLOW RANGE	**MINIMUM SIZE OF EXHAUST HEADER**
0 THROUGH 5 GPM	MINIMUM SIZE SHALL BE 3/4 INCH
6 THROUGH 10 GPM	MINIMUM SIZE SHALL BE 1 INCH
11 THROUGH 15 GPM	MINIMUM SIZE SHALL BE 1-1/4 INCH
16 THROUGH 25 GPM	MINIMUM SIZE SHALL BE 1-1/2 INCH
26 THROUGH 50 GPM	MINIMUM SIZE SHALL BE 2 INCH
NOTE: CONTRACTOR SHALL SIZE ALL DRIPLINE INTAKE/EXHAUST HEADERS PER PIPE SIZING CHART, IN NO INSTANCE SHALL PIPE SIZE EXCEED DESIGNATED GPM RANGE.	

FOR IRRIGATION LEGEND - SEE SHEET L4.0
FOR IRRIGATION NOTES - SEE SHEET L5.1
FOR IRRIGATION CALCULATIONS - SEE SHEET L5.2
FOR IRRIGATION DETAIL DETAILS - SEE SHEET L6.1 - L6.3
FOR LANDSCAPE DETAILS - SEE SHEET L9.1 - L9.5

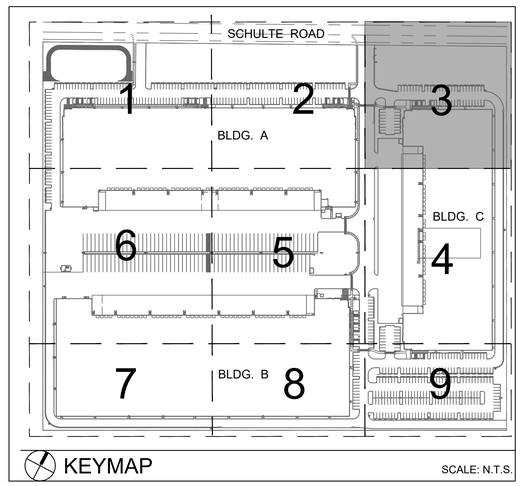

0 10 20 40 60

RGA
Office of Architectural Design
15231 Alton Parkway, Suite 100
Irvine, CA 92618
T 949-341-0920
FX 949-341-0922

CONSULTANT

RLA
8841 RESEARCH DR
SUITE 200
IRVINE • CA 92618
949.387.1323
RIDGELA.COM

PROFESSIONAL SEALS

REGISTERED LANDSCAPE ARCHITECT — JAMES S. R. RIDGE — No. 4209 — 5/15/21 (orig.) — 05/31/21 (rev. date) — STATE OF CALIFORNIA

PROJECT NAME

LBA LOGISTIC CENTER III

14800 W. SCHULTE
ROAD, TRACY, CA

LBA REALTY

LBA REALTY
3347 MICHELSON DRIVE, SUITE 200
IRVINE, CA 92612
D: 949-955-9333, C: 818-919-5336

MARK	DATE	DESCRIPTION
	06/15/20	1st COUNTY SUBMITTAL

RGA PROJECT NO:	19071.00
OWNER PROJECT NO:	00000.00
CAD FILE NAME:	--
DRAWN BY:	RLA
CHK'D BY:	RLA

COPYRIGHT
RGA, OFFICE OF ARCHITECTURAL DESIGN

SHEET TITLE
IRRIGATION PLAN

SHEET: L4.3

MATCHLINE - SEE SHEET L4.3

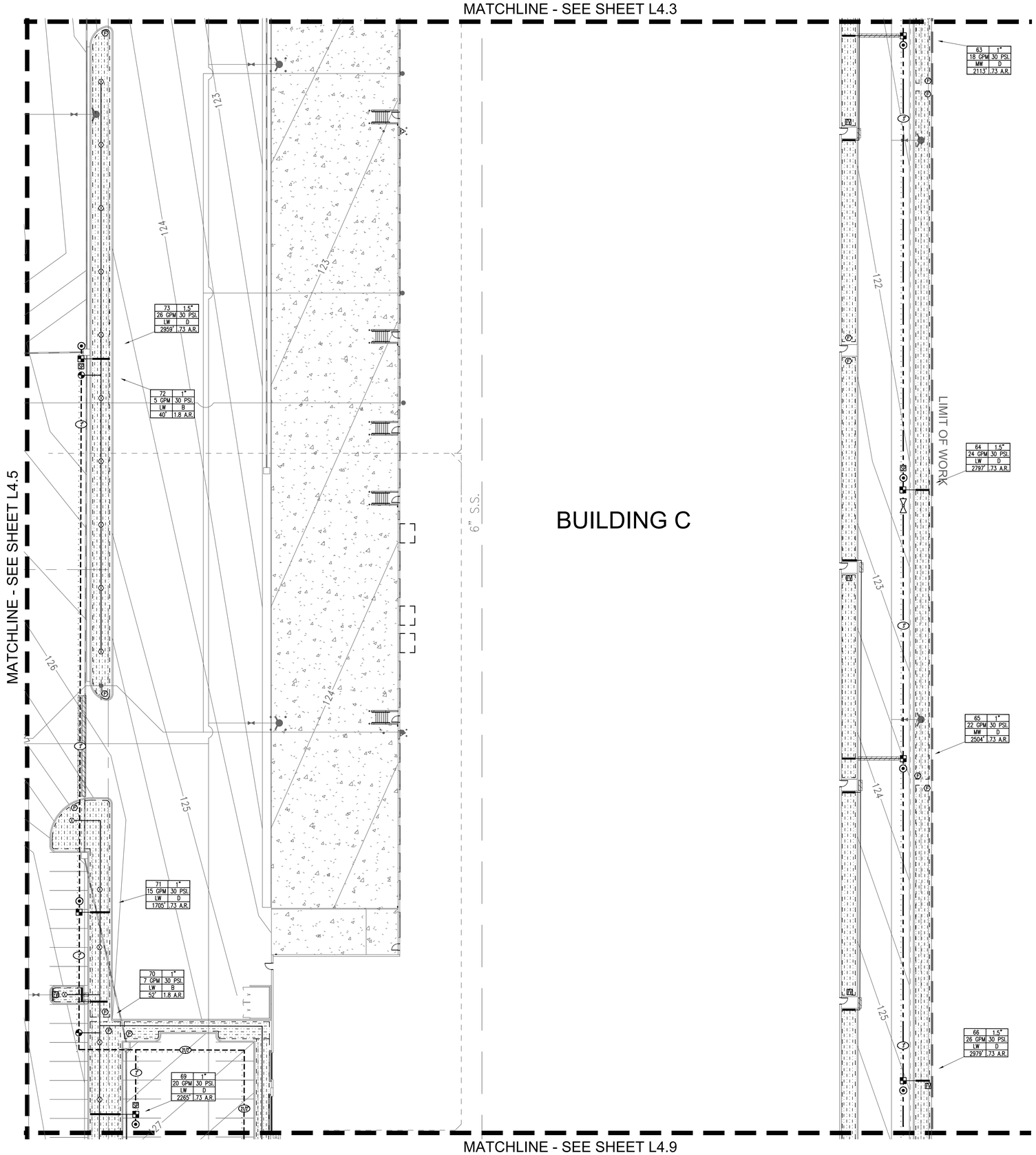

IRRIGATION PIPE AND EQUIPMENT LOCATION NOTES

1. ALL IRRIGATION EQUIPMENT, SPRINKLERS AND PIPE THAT ARE SHOWN IN PAVING IS FOR DRAWING CLARITY ONLY. ALL EQUIPMENT SHALL BE INSTALLED WITHIN LANDSCAPED AREA. NO IRRIGATION EQUIPMENT SHALL BE LOCATED IN HARDSCAPE.
2. MAINLINE AND VALVE LOCATIONS SHOWN ON THIS DRAWING ARE DESIGNED AS DIAGRAMMATIC AND APPROXIMATE. THE LANDSCAPE CONTRACTOR SHALL STAKE ALL IRRIGATION PIPE / APPURTENANCE LOCATION FOR REVIEW AND APPROVAL. FINAL LOCATION AND EXACT POSITIONING OF ALL IRRIGATION SHALL BE DETERMINED BY THE OWNER'S AUTHORIZED REPRESENTATIVE. MINOR MODIFICATIONS OF ALL IRRIGATION APPURTENANCE AS REQUESTED BY THE OWNER SHALL BE PROVIDED BY THE CONTRACTOR AT NO ADDITIONAL COST. FAILURE TO OBTAIN OWNER'S APPROVAL PRIOR TO THE INSTALLATION SHALL CAUSE THE CONTRACTOR TO MAKE OWNER DIRECTED REVISION AT NO CHARGE. ALL PIPING AND WIRES SHALL BE SLEEVED UNDER PAVING, HARDSCAPE, ETC. AND AS DIRECTED BY OWNER'S AUTHORIZED REPRESENTATIVE.

IRRIGATION VALVE CALLOUT

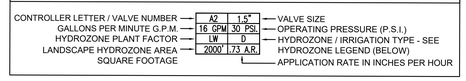

HYDROZONE LEGEND

Hydrozone Number	Plant Factor (Water Use) - from WUCOLS Selected based on type of plants in hydrozones:	IE - Irrigation Efficiency
(1) Drip - Low Water / Plants	VLW = 0.1 - Very Low Water Use Plants	S = Spray .71
(2) Drip - Moderate Water / Plants	LW = 0.1 - 0.3 - Low Water Use Plants	MP = Rotary .73
(3) Rotator - Low Water / Plants	MW = 0.4 - 0.6 - Moderate Water Use Plants	R = Rotor .73
(4) Rotor - Low Water / Plants	HW = 0.7 - 0.9 - High Water Use Plants	B = Bubbler .77
(5) Bubbler - Low Water / Trees		D = Drip .81
(6) Bubbler - Moderate Water / Trees		

IRRIGATION NOTE CALLOUT

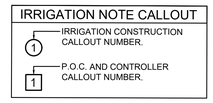

FOR IRRIGATION LEGEND - SEE SHEET L4.0
FOR IRRIGATION NOTES - SEE SHEET L5.1
FOR IRRIGATION CALCULATIONS - SEE SHEET L5.2
FOR IRRIGATION DETAIL DETAILS - SEE SHEET L6.1 - L6.3
FOR LANDSCAPE DETAILS - SEE SHEET L9.1 - L9.5

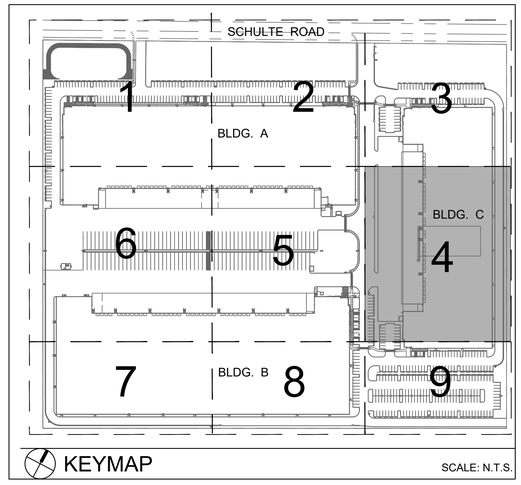

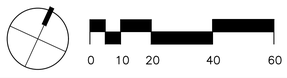

RGA
Office of Architectural Design
15231 Alton Parkway, Suite 100
Irvine, CA 92618
T 949-341-0920
FX 949-341-0922

CONSULTANT

RLA
8841 RESEARCH DR
SUITE 200
IRVINE • CA 92618
949.387.1323
RIDGELA.COM

PROFESSIONAL SEALS

PROJECT NAME

LBA LOGISTIC CENTER III

14800 W. SCHULTE
ROAD, TRACY, CA

LBA REALTY
3347 MICHELSON DRIVE, SUITE 200
IRVINE, CA 92612
D: 949-955-9333, C: 818-919-5336

MARK	DATE	DESCRIPTION
	06/15/20	1st COUNTY SUBMITTAL

RGA PROJECT NO:	19071.00
OWNER PROJECT NO:	00000.00
CAD FILE NAME:	–
DRAWN BY:	RLA
CHK'D BY:	RLA

COPYRIGHT
RGA, OFFICE OF ARCHITECTURAL DESIGN

SHEET TITLE
IRRIGATION PLAN

SHEET: L4.4

MATCHLINE - SEE SHEET L4.2

BUILDING A

6" S.S.

NOTE: MAINLINE AND VALVE LOCATIONS ARE SHOWN WITHIN PAVING FOR DRAWING CLARITY ONLY. VERIFY EXACT LOCATION IN FIELD PRIOR TO INSTALLATION. REFER TO IRRIGATION PIPE AND EQUIPMENT LOCATION NOTES.

LEACH FIELD

75	1.5"	
26 GPM	30 PSI.	
LW	D	
2937'	.73 A.R.	

76	1.5"	
18 GPM	30 PSI.	
LW	D	
2119'	.73 A.R.	

77	1"	
8 GPM	30 PSI.	
MW	D	
60'	1.8 A.R.	

78	1.5"	
24 GPM	30 PSI.	
LW	D	
2687'	.73 A.R.	

79	1.5"	
25 GPM	30 PSI.	
MW	D	
2771'	.73 A.R.	

80	1"	
9 GPM	30 PSI.	
MW	D	
1054'	.73 A.R.	

MATCHLINE - SEE SHEET L4.6

MATCHLINE - SEE SHEET L4.4

BUILDING B

MATCHLINE - SEE SHEET L4.8

0 10 20 40 60

LATERAL PIPE SIZING CHART		
0 TO 5	GPM	3/4" SCH. 40 PVC PIPE
6 TO 10	GPM	1" SCH. 40 PVC PIPE
11 TO 15	GPM	1-1/4" SCH. 40 PVC PIPE
16 TO 25	GPM	1-1/2" SCH. 40 PVC PIPE
26 TO 35	GPM	2" SCH. 40 PVC PIPE
36 TO 50	GPM	2-1/2" SCH. 40 PVC PIPE
51 TO 75	GPM	3" SCH. 40 PVC PIPE

DRIPLINE INTAKE/EXHAUST HEADER PIPE SIZING CHART	
INTAKE/EXHAUST HEADER MINIMUM SIZE OF 3/4 INCH.	
FLOW RANGE	**MINIMUM SIZE OF EXHAUST HEADER**
0 THROUGH 5 GPM	MINIMUM SIZE SHALL BE 3/4 INCH
6 THROUGH 10 GPM	MINIMUM SIZE SHALL BE 1 INCH
11 THROUGH 15 GPM	MINIMUM SIZE SHALL BE 1-1/4 INCH
16 THROUGH 25 GPM	MINIMUM SIZE SHALL BE 1-1/2 INCH
26 THROUGH 50 GPM	MINIMUM SIZE SHALL BE 2 INCH
NOTE: CONTRACTOR SHALL SIZE ALL DRIPLINE INTAKE/EXHAUST HEADERS PER PIPE SIZING CHART, IN NO INSTANCE SHALL PIPE SIZE EXCEED DESIGNATED GPM RANGE.	

IRRIGATION PIPE AND EQUIPMENT LOCATION NOTES

1. ALL IRRIGATION EQUIPMENT, SPRINKLERS AND PIPE THAT ARE SHOWN IN PAVING IS FOR DRAWING CLARITY ONLY. ALL EQUIPMENT SHALL BE INSTALLED WITHIN LANDSCAPED AREA. NO IRRIGATION EQUIPMENT SHALL BE LOCATED IN HARDSCAPE.
2. MAINLINE AND VALVE LOCATIONS SHOWN ON THIS DRAWING ARE DESIGNED AS DIAGRAMMATIC AND APPROXIMATE. THE LANDSCAPE CONTRACTOR SHALL STAKE ALL IRRIGATION PIPE / APPURTENANCE LOCATION FOR REVIEW AND APPROVAL. FINAL LOCATION AND EXACT POSITIONING OF ALL IRRIGATION SHALL BE DETERMINED BY THE OWNER'S AUTHORIZED REPRESENTATIVE. MINOR MODIFICATIONS OF ALL IRRIGATION APPURTENANCE AS REQUESTED BY THE OWNER SHALL BE PROVIDED BY THE CONTRACTOR AT NO ADDITIONAL COST. FAILURE TO OBTAIN OWNER'S APPROVAL PRIOR TO THE INSTALLATION SHALL CAUSE THE CONTRACTOR TO MAKE OWNER DIRECTED REVISION AT NO CHARGE. ALL PIPING AND WIRES SHALL BE SLEEVED UNDER PAVING, HARDSCAPE, ETC. AND AS DIRECTED BY OWNER'S AUTHORIZED REPRESENTATIVE.

IRRIGATION VALVE CALLOUT

CONTROLLER LETTER / VALVE NUMBER	A2	1.5" — VALVE SIZE
GALLONS PER MINUTE G.P.M.	16 GPM	30 PSI. — OPERATING PRESSURE (P.S.I.)
HYDROZONE PLANT FACTOR	LW	D — HYDROZONE / IRRIGATION TYPE - SEE HYDROZONE LEGEND (BELOW)
LANDSCAPE HYDROZONE AREA SQUARE FOOTAGE	2000'	.73 A.R. — APPLICATION RATE IN INCHES PER HOUR

HYDROZONE LEGEND

Hydrozone Number	Plant Factor (Water Use) - from WUCOLS Selected based on type of plants in hydrozones:	IE - Irrigation Efficiency
(1) Drip - Low Water / Plants	VLW = 0.1 - Very Low Water Use Plants	S = Spray .71
(2) Drip - Moderate Water / Plants	LW = 0.1 - 0.3 - Low Water Use Plants	MP = Rotary .73
(3) Rotator - Low Water / Plants	MW = 0.4 - 0.6 - Moderate Water Use Plants	R = Rotor .73
(4) Rotor - Low Water / Plants	HW = 0.7 - 0.9 - High Water Use Plants	B = Bubbler .77
(5) Bubbler - Low Water / Trees		D = Drip .81
(6) Bubbler - Moderate Water / Trees		

IRRIGATION NOTE CALLOUT

(1) IRRIGATION CONSTRUCTION CALLOUT NUMBER.

[1] P.O.C. AND CONTROLLER CALLOUT NUMBER.

FOR IRRIGATION LEGEND - SEE SHEET L4.0
FOR IRRIGATION NOTES - SEE SHEET L5.1
FOR IRRIGATION CALCULATIONS - SEE SHEET L5.2
FOR IRRIGATION DETAIL DETAILS - SEE SHEET L6.1 - L6.3
FOR LANDSCAPE DETAILS - SEE SHEET L9.1 - L9.5

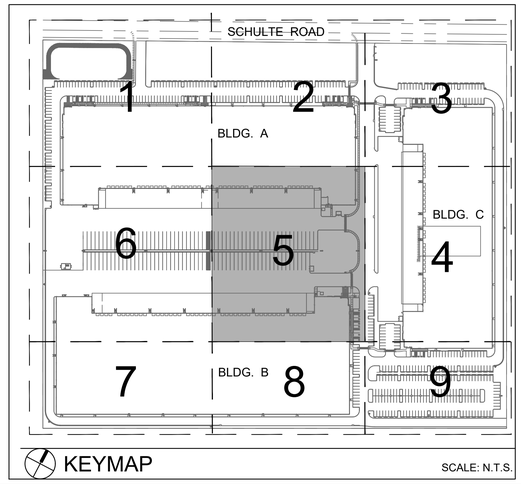

RGA
Office of Architectural Design
15231 Alton Parkway, Suite 100
Irvine, CA 92618
T 949-341-0920
FX 949-341-0922

CONSULTANT

RLA
8841 RESEARCH DR
SUITE 200
IRVINE • CA 92618
949.387.1323
RIDGELA.COM

PROFESSIONAL SEALS

REGISTERED LANDSCAPE ARCHITECT — JAMES J. RIDGE — No. 4329 — 5/15/21 (Orig.) — 05/31/21 (Exp. 04/30) — STATE OF CALIFORNIA

PROJECT NAME

LBA LOGISTIC CENTER III

14800 W. SCHULTE
ROAD, TRACY, CA

LBA REALTY

LBA REALTY
3347 MICHELSON DRIVE, SUITE 200
IRVINE, CA 92612

D: 949-955-9333, C: 818-919-5336

MARK	DATE	DESCRIPTION
	06/15/20	1st COUNTY SUBMITTAL

RGA PROJECT NO:	19071.00
OWNER PROJECT NO:	00000.00
CAD FILE NAME:	--
DRAWN BY:	RLA
CHK'D BY:	RLA

COPYRIGHT
RGA, OFFICE OF ARCHITECTURAL DESIGN

SHEET TITLE

IRRIGATION PLAN

SHEET: L4.5

MATCHLINE - SEE SHEET L4.1

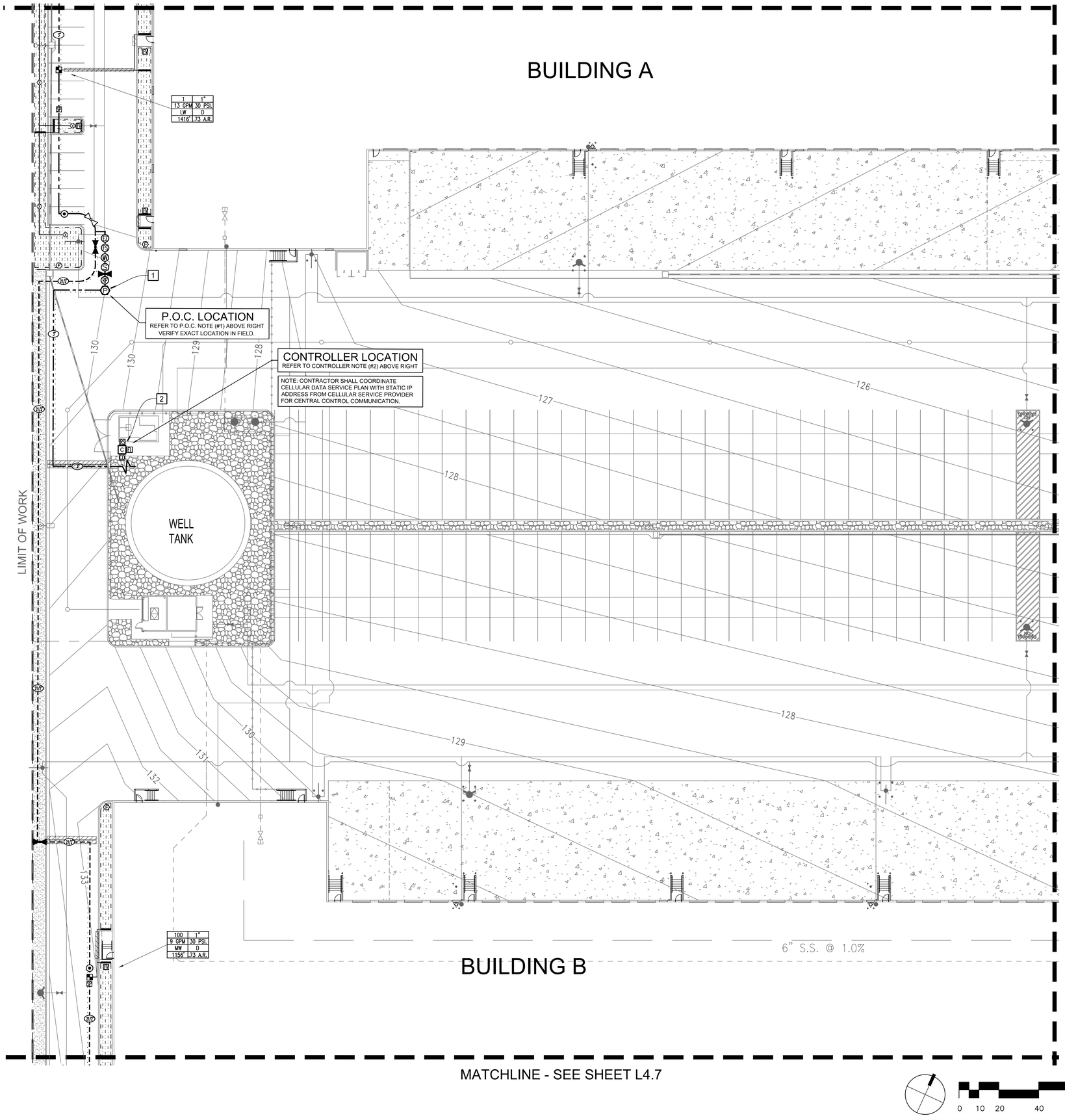

P.O.C. / METER NOTES

1 **P.O.C. NOTE #1:**
POINT OF CONNECTION SHALL BE DOWNSTREAM OF THE WELL WATER BOOSTER PUMP. VERIFY THE ACTUAL LOCATION, SIZE AND WATER PRESSURE IN THE FIELD PRIOR TO STARTING WORK. IF ANY OF THE POC INFORMATION SHOWN ON THESE DRAWING IS FOUND TO BE DIFFERENT THAN THE ACTUAL POC INFORMATION GATHERED IN THE FIELD, IMMEDIATELY NOTIFY THE LANDSCAPE ARCHITECT. IN THE EVENT PRESSURE DIFFERENCES ARE NOT REPORTED PRIOR TO START OF CONSTRUCTION, THE IRRIGATION CONTRACTOR SHALL ASSUME FULL RESPONSIBILITY FOR ANY REVISIONS NECESSARY AT NO ADDITIONAL COST TO THE OWNER.

IRRIGATION WELL WATER INFORMATION	
ADDRESS: 14800 W. SCHULTE RD. TRACY, CA.	
SUB-METER SIZE	3"
SYSTEM DESIGN PRESSURE	87 PSI.
MINIMUM BOOSTER PUMP OUTLET PRESSURE	97 PSI
MAXIMUM SYSTEM DEMAND	80 GPM
LANDSCAPE AREA SERVED	263,347 SQ. FT.

CONTROLLER NOTES

2 **CONTROLLER NOTE #2:**
CONTROLLER LOCATION. REFER TO LEGEND FOR CONTROLLER MAKE AND MODEL NUMBER. CONTROLLER ASSEMBLY SHALL BE INSTALLED IN A STAINLESS STEEL ENCLOSURE. FINAL LOCATION OF CONTROLLER ASSEMBLY AND ELECTRICAL POC SHALL BE CONFIRMED WITH OWNER'S AUTHORIZED REPRESENTATIVE PRIOR TO COMMENCING WORK. THE 120 VOLT POWER SUPPLY HOOK-UP OF THE IRRIGATION CONTROLLER SHALL BE THE RESPONSIBILITY OF THE IRRIGATION CONTRACTOR.

NOTE: CONTROLLER SHALL BE PROGRAMED TO RUN MINIMUM 3 VALVES CONCURRENTLY AT A MAXIMUM 80 GPM, SO NOT TO EXCEED IRRIGATION WATERING WINDOW. AT NO TIME SHALL VALVES BE RUN SEQUENTIALLY. CONTRACTOR SHALL PROVIDE A LAMINATED NOTE POSTED ON CONTROLLER WITH MINIMUM 1/2" LETTERING STATING THE FOLLOWING: "IRRIGATION CONTROLLER IS DESIGNED TO RUN A MINIMUM OF 3 VALVES CONCURRENTLY AT A MAXIMUM 80 GPM, AT NO TIME SHALL VALVES BE RUN SEQUENTIALLY"

IRRIGATION PIPE AND EQUIPMENT LOCATION NOTES

1. ALL IRRIGATION EQUIPMENT, SPRINKLERS AND PIPE THAT ARE SHOWN IN PAVING IS FOR DRAWING CLARITY ONLY. ALL EQUIPMENT SHALL BE INSTALLED WITHIN LANDSCAPED AREA. NO IRRIGATION EQUIPMENT SHALL BE LOCATED IN HARDSCAPE.
2. MAINLINE AND VALVE LOCATIONS SHOWN ON THIS DRAWING ARE DESIGNED AS DIAGRAMMATIC AND APPROXIMATE. THE LANDSCAPE CONTRACTOR SHALL STAKE ALL IRRIGATION PIPE / APPURTENANCE LOCATION FOR REVIEW AND APPROVAL. FINAL LOCATION AND EXACT POSITIONING OF ALL IRRIGATION SHALL BE DETERMINED BY THE OWNER'S AUTHORIZED REPRESENTATIVE. MINOR MODIFICATIONS OF ALL IRRIGATION APPURTENANCE AS REQUESTED BY THE OWNER SHALL BE PROVIDED BY THE CONTRACTOR AT NO ADDITIONAL COST. FAILURE TO OBTAIN OWNER'S APPROVAL PRIOR TO THE INSTALLATION SHALL CAUSE THE CONTRACTOR TO MAKE OWNER DIRECTED REVISION AT NO CHARGE. ALL PIPING AND WIRES SHALL BE SLEEVED UNDER PAVING, HARDSCAPE, ETC. AND AS DIRECTED BY OWNER'S AUTHORIZED REPRESENTATIVE.

IRRIGATION VALVE CALLOUT

CONTROLLER LETTER / VALVE NUMBER	A2	1.5"	VALVE SIZE
GALLONS PER MINUTE G.P.M.	16 GPM	30 PSI.	OPERATING PRESSURE (P.S.I.)
HYDROZONE PLANT FACTOR	LW	D	HYDROZONE / IRRIGATION TYPE - SEE HYDROZONE LEGEND (BELOW)
LANDSCAPE HYDROZONE AREA SQUARE FOOTAGE	2000'	.73 A.R.	APPLICATION RATE IN INCHES PER HOUR

HYDROZONE LEGEND

Hydrozone Number	Plant Factor (Water Use) - from WUCOLS Selected based on type of plants in hydrozones:	IE - Irrigation Efficiency
(1) Drip - Low Water / Plants	VLW = 0.1 - Very Low Water Use Plants	S = Spray .71
(2) Drip - Moderate Water / Plants	LW = 0.1 - 0.3 - Low Water Use Plants	MP = Rotary .73
(3) Rotator - Low Water / Plants	MW = 0.4 - 0.6 - Moderate Water Use Plants	R = Rotor .73
(4) Rotor - Low Water / Plants	HW = 0.7 - 0.9 - High Water Use Plants	B = Bubbler .77
(5) Bubbler - Low Water / Trees		D = Drip .81
(6) Bubbler - Moderate Water / Trees		

IRRIGATION NOTE CALLOUT

(1) IRRIGATION CONSTRUCTION CALLOUT NUMBER.

[1] P.O.C. AND CONTROLLER CALLOUT NUMBER.

FOR IRRIGATION LEGEND - SEE SHEET L4.0
FOR IRRIGATION NOTES - SEE SHEET L5.1
FOR IRRIGATION CALCULATIONS - SEE SHEET L5.2
FOR IRRIGATION DETAIL DETAILS - SEE SHEET L6.1 - L6.3
FOR LANDSCAPE DETAILS - SEE SHEET L9.1 - L9.5

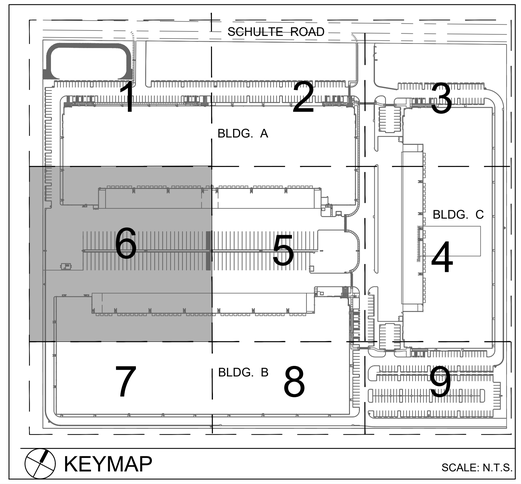

0 10 20 40 60

RGA
Office of Architectural Design
15231 Alton Parkway, Suite 100
Irvine, CA 92618
T 949-341-0920
FX 949-341-0922

CONSULTANT

RLA
8841 RESEARCH DR
SUITE 200
IRVINE • CA 92618
949.387.1323
RIDGELA.COM

PROFESSIONAL SEALS

REGISTERED LANDSCAPE ARCHITECT
JAMES V. RIDGE
No. 4509
STATE OF CALIFORNIA
(RGA)
05/31/21
(EXP. 04/30)
5/15/21

PROJECT NAME

LBA LOGISTIC CENTER III

14800 W. SCHULTE
ROAD, TRACY, CA

LBA REALTY

3347 MICHELSON DRIVE, SUITE 200
IRVINE, CA 92612

D: 949-955-9333, C: 818-919-5336

MARK	DATE	DESCRIPTION
	06/15/20	1st COUNTY SUBMITTAL

RGA PROJECT NO:	19071.00
OWNER PROJECT NO:	00000.00
CAD FILE NAME:	--
DRAWN BY:	RLA
CHK'D BY:	RLA

COPYRIGHT
RGA, OFFICE OF ARCHITECTURAL DESIGN

SHEET TITLE
IRRIGATION PLAN

SHEET: L4.6

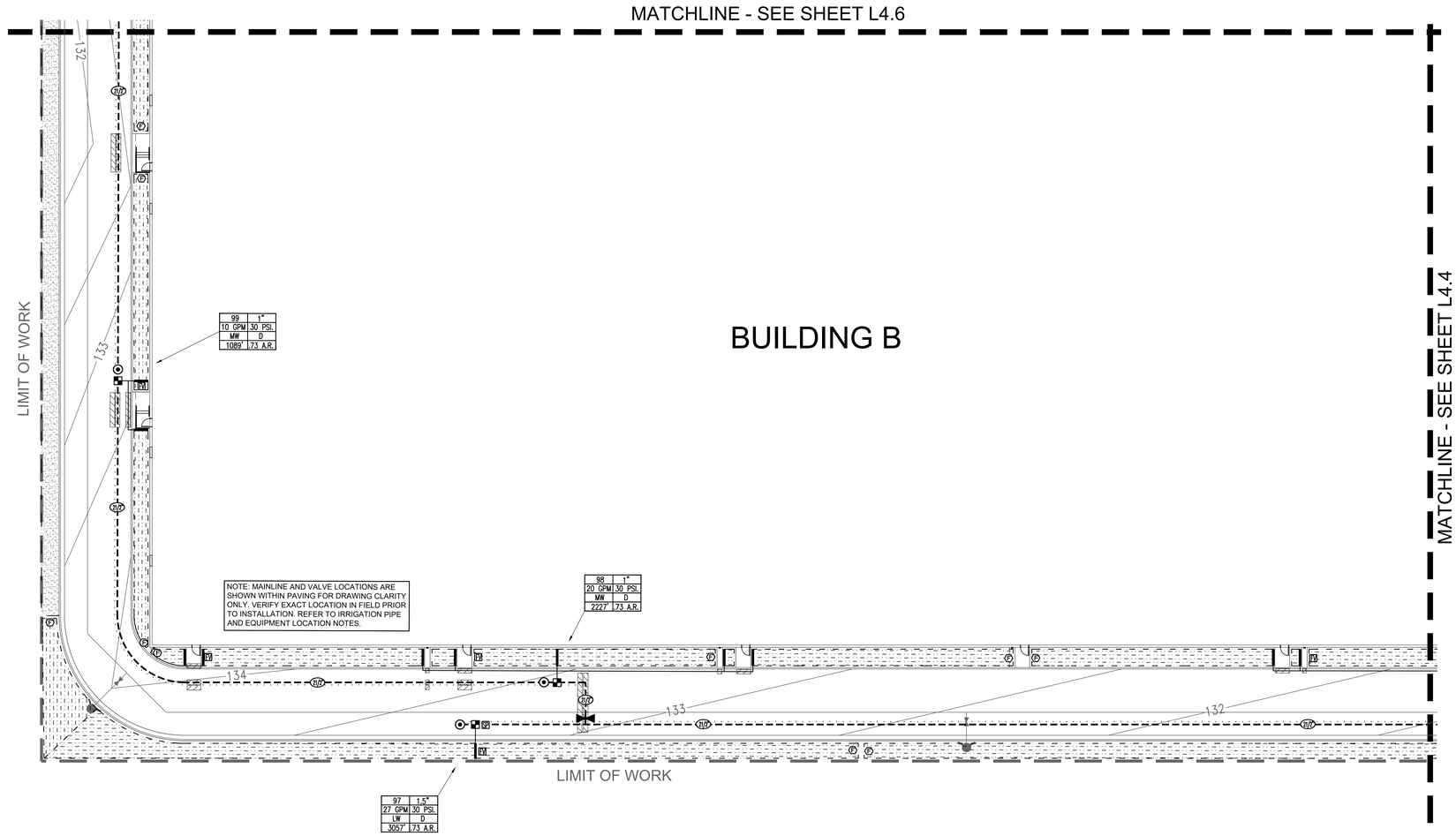

IRRIGATION PIPE AND EQUIPMENT LOCATION NOTES

1. ALL IRRIGATION EQUIPMENT, SPRINKLERS AND PIPE THAT ARE SHOWN IN PAVING IS FOR DRAWING CLARITY ONLY. ALL EQUIPMENT SHALL BE INSTALLED WITHIN LANDSCAPED AREA. NO IRRIGATION EQUIPMENT SHALL BE LOCATED IN HARDSCAPE.
2. MAINLINE AND VALVE LOCATIONS SHOWN ON THIS DRAWING ARE DESIGNED AS DIAGRAMMATIC AND APPROXIMATE. THE LANDSCAPE CONTRACTOR SHALL STAKE ALL IRRIGATION PIPE / APPURTENANCE LOCATION FOR REVIEW AND APPROVAL. FINAL LOCATION AND EXACT POSITIONING OF ALL IRRIGATION SHALL BE DETERMINED BY THE OWNER'S AUTHORIZED REPRESENTATIVE. MINOR MODIFICATIONS OF ALL IRRIGATION APPURTENANCE AS REQUESTED BY THE OWNER SHALL BE PROVIDED BY THE CONTRACTOR AT NO ADDITIONAL COST. FAILURE TO OBTAIN OWNER'S APPROVAL PRIOR TO THE INSTALLATION SHALL CAUSE THE CONTRACTOR TO MAKE OWNER DIRECTED REVISION AT NO CHARGE. ALL PIPING AND WIRES SHALL BE SLEEVED UNDER PAVING, HARDSCAPE, ETC. AND AS DIRECTED BY OWNER'S AUTHORIZED REPRESENTATIVE.

IRRIGATION VALVE CALLOUT

CONTROLLER LETTER / VALVE NUMBER — A2 | 1.5" — VALVE SIZE
GALLONS PER MINUTE G.P.M. — 16 GPM | 30 PSI — OPERATING PRESSURE (P.S.I.)
HYDROZONE PLANT FACTOR — LW | D — HYDROZONE / IRRIGATION TYPE - SEE HYDROZONE LEGEND (BELOW)
LANDSCAPE HYDROZONE AREA SQUARE FOOTAGE — 2000' | .73 A.R. — APPLICATION RATE IN INCHES PER HOUR

HYDROZONE LEGEND

Hydrozone Number	Plant Factor (Water Use) - from WUCOLS Selected based on type of plants in hydrozones:	IE - Irrigation Efficiency
(1) Drip - Low Water / Plants	VLW = 0.1 - Very Low Water Use Plants	S = Spray .71
(2) Drip - Moderate Water / Plants	LW = 0.1 - 0.3 - Low Water Use Plants	MP = Rotary .73
(3) Rotator - Low Water / Plants	MW = 0.4 - 0.6 - Moderate Water Use Plants	R = Rotor .73
(4) Rotor - Low Water / Plants	HW = 0.7 - 0.9 - High Water Use Plants	B = Bubbler .77
(5) Bubbler - Low Water / Trees		D = Drip .81
(6) Bubbler - Moderate Water / Trees		

IRRIGATION NOTE CALLOUT

(1) IRRIGATION CONSTRUCTION CALLOUT NUMBER.
[1] P.O.C. AND CONTROLLER CALLOUT NUMBER.

LATERAL PIPE SIZING CHART		
0 TO 5	GPM	3/4" SCH. 40 PVC PIPE
6 TO 10	GPM	1" SCH. 40 PVC PIPE
11 TO 15	GPM	1-1/4" SCH. 40 PVC PIPE
16 TO 25	GPM	1-1/2" SCH. 40 PVC PIPE
26 TO 35	GPM	2" SCH. 40 PVC PIPE
36 TO 50	GPM	2-1/2" SCH. 40 PVC PIPE
51 TO 75	GPM	3" SCH. 40 PVC PIPE

DRIPLINE INTAKE/EXHAUST HEADER PIPE SIZING CHART	
INTAKE/EXHAUST HEADER MINIMUM SIZE OF 3/4 INCH.	
FLOW RANGE	**MINIMUM SIZE OF EXHAUST HEADER**
0 THROUGH 5 GPM	MINIMUM SIZE SHALL BE 3/4 INCH
6 THROUGH 10 GPM	MINIMUM SIZE SHALL BE 1 INCH
11 THROUGH 15 GPM	MINIMUM SIZE SHALL BE 1-1/4 INCH
16 THROUGH 25 GPM	MINIMUM SIZE SHALL BE 1-1/2 INCH
26 THROUGH 50 GPM	MINIMUM SIZE SHALL BE 2 INCH
NOTE: CONTRACTOR SHALL SIZE ALL DRIPLINE INTAKE/EXHAUST HEADERS PER PIPE SIZING CHART, IN NO INSTANCE SHALL PIPE SIZE EXCEED DESIGNATED GPM RANGE.	

FOR IRRIGATION LEGEND - SEE SHEET L4.0
FOR IRRIGATION NOTES - SEE SHEET L5.1
FOR IRRIGATION CALCULATIONS - SEE SHEET L5.2
FOR IRRIGATION DETAIL DETAILS - SEE SHEET L6.1 - L6.3
FOR LANDSCAPE DETAILS - SEE SHEET L9.1 - L9.5

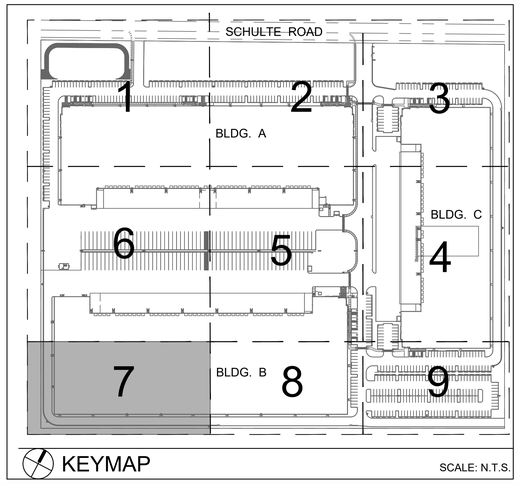

0 10 20 40 60

RGA
Office of Architectural Design
15231 Alton Parkway, Suite 100
Irvine, CA 92618
T 949-341-0920
FX 949-341-0922

CONSULTANT

RLA
8841 RESEARCH DR
SUITE 200
IRVINE • CA 92618
949.387.1323
RIDGELA.COM

PROFESSIONAL SEALS

REGISTERED LANDSCAPE ARCHITECT — JAMES J. RIDGE — No. 4509 — 5/15/21 (ORIG.) 05/31/21 (EXP. 8/31) — STATE OF CALIFORNIA

PROJECT NAME

LBA LOGISTIC CENTER III

14800 W. SCHULTE
ROAD, TRACY, CA

LBA REALTY

LBA REALTY
3347 MICHELSON DRIVE, SUITE 200
IRVINE, CA 92612

D: 949-955-9333, C: 818-919-5336

MARK	DATE	DESCRIPTION
	06/15/20	1st COUNTY SUBMITTAL

RGA PROJECT NO:	19071.00
OWNER PROJECT NO:	00000.00
CAD FILE NAME:	--
DRAWN BY:	RLA
CHK'D BY:	RLA

COPYRIGHT
RGA, OFFICE OF ARCHITECTURAL DESIGN

SHEET TITLE
IRRIGATION PLAN

SHEET: L4.7

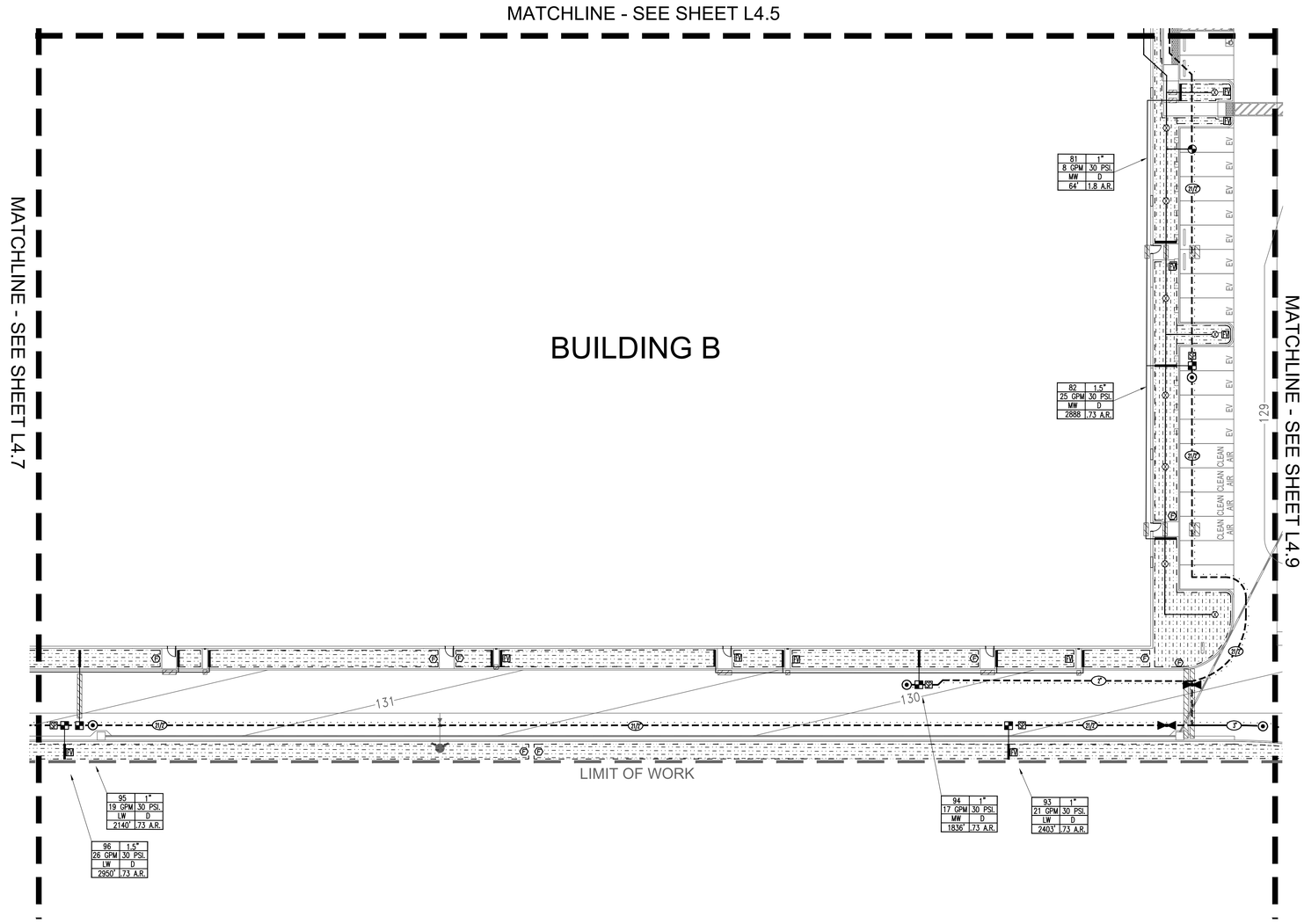

IRRIGATION PIPE AND EQUIPMENT LOCATION NOTES

1. ALL IRRIGATION EQUIPMENT, SPRINKLERS AND PIPE THAT ARE SHOWN IN PAVING IS FOR DRAWING CLARITY ONLY. ALL EQUIPMENT SHALL BE INSTALLED WITHIN LANDSCAPED AREA. NO IRRIGATION EQUIPMENT SHALL BE LOCATED IN HARDSCAPE.
2. MAINLINE AND VALVE LOCATIONS SHOWN ON THIS DRAWING ARE DESIGNED AS DIAGRAMMATIC AND APPROXIMATE. THE LANDSCAPE CONTRACTOR SHALL STAKE ALL IRRIGATION PIPE / APPURTENANCE LOCATION FOR REVIEW AND APPROVAL. FINAL LOCATION AND EXACT POSITIONING OF ALL IRRIGATION SHALL BE DETERMINED BY THE OWNER'S AUTHORIZED REPRESENTATIVE. MINOR MODIFICATIONS OF ALL IRRIGATION APPURTENANCE AS REQUESTED BY THE OWNER SHALL BE PROVIDED BY THE CONTRACTOR AT NO ADDITIONAL COST. FAILURE TO OBTAIN OWNER'S APPROVAL PRIOR TO THE INSTALLATION SHALL CAUSE THE CONTRACTOR TO MAKE OWNER DIRECTED REVISION AT NO CHARGE. ALL PIPING AND WIRES SHALL BE SLEEVED UNDER PAVING, HARDSCAPE, ETC. AND AS DIRECTED BY OWNER'S AUTHORIZED REPRESENTATIVE.

IRRIGATION VALVE CALLOUT

CONTROLLER LETTER / VALVE NUMBER	A2	1.5" — VALVE SIZE
GALLONS PER MINUTE G.P.M.	16 GPM	30 PSI — OPERATING PRESSURE (P.S.I.)
HYDROZONE PLANT FACTOR	LW	D — HYDROZONE / IRRIGATION TYPE - SEE HYDROZONE LEGEND (BELOW)
LANDSCAPE HYDROZONE AREA SQUARE FOOTAGE	2000'	.73 A.R. — APPLICATION RATE IN INCHES PER HOUR

HYDROZONE LEGEND

Hydrozone Number	Plant Factor (Water Use) - from WUCOLS Selected based on type of plants in hydrozones:	IE - Irrigation Efficiency
(1) Drip - Low Water / Plants	VLW = 0.1 - Very Low Water Use Plants	S = Spray .71
(2) Drip - Moderate Water / Plants	LW = 0.1 - 0.3 - Low Water Use Plants	MP = Rotary .73
(3) Rotator - Low Water / Plants	MW = 0.4 - 0.6 - Moderate Water Use Plants	R = Rotor .73
(4) Rotor - Low Water / Plants	HW = 0.7 - 0.9 - High Water Use Plants	B = Bubbler .77
(5) Bubbler - Low Water / Trees		D = Drip .81
(6) Bubbler - Moderate Water / Trees		

IRRIGATION NOTE CALLOUT

(1) — IRRIGATION CONSTRUCTION CALLOUT NUMBER.

[1] — P.O.C. AND CONTROLLER CALLOUT NUMBER.

LATERAL PIPE SIZING CHART		
0 TO 5	GPM	3/4" SCH. 40 PVC PIPE
6 TO 10	GPM	1" SCH. 40 PVC PIPE
11 TO 15	GPM	1-1/4" SCH. 40 PVC PIPE
16 TO 25	GPM	1-1/2" SCH. 40 PVC PIPE
26 TO 35	GPM	2" SCH. 40 PVC PIPE
36 TO 50	GPM	2-1/2" SCH. 40 PVC PIPE
51 TO 75	GPM	3" SCH. 40 PVC PIPE

DRIPLINE INTAKE/EXHAUST HEADER PIPE SIZING CHART	
INTAKE/EXHAUST HEADER MINIMUM SIZE OF 3/4 INCH.	
FLOW RANGE	**MINIMUM SIZE OF EXHAUST HEADER**
0 THROUGH 5 GPM	MINIMUM SIZE SHALL BE 3/4 INCH
6 THROUGH 10 GPM	MINIMUM SIZE SHALL BE 1 INCH
11 THROUGH 15 GPM	MINIMUM SIZE SHALL BE 1-1/4 INCH
16 THROUGH 25 GPM	MINIMUM SIZE SHALL BE 1-1/2 INCH
26 THROUGH 50 GPM	MINIMUM SIZE SHALL BE 2 INCH
NOTE: CONTRACTOR SHALL SIZE ALL DRIPLINE INTAKE/EXHAUST HEADERS PER PIPE SIZING CHART, IN NO INSTANCE SHALL PIPE SIZE EXCEED DESIGNATED GPM RANGE.	

FOR IRRIGATION LEGEND - SEE SHEET L4.0
FOR IRRIGATION NOTES - SEE SHEET L5.1
FOR IRRIGATION CALCULATIONS - SEE SHEET L5.2
FOR IRRIGATION DETAIL DETAILS - SEE SHEET L6.1 - L6.3
FOR LANDSCAPE DETAILS - SEE SHEET L9.1 - L9.5

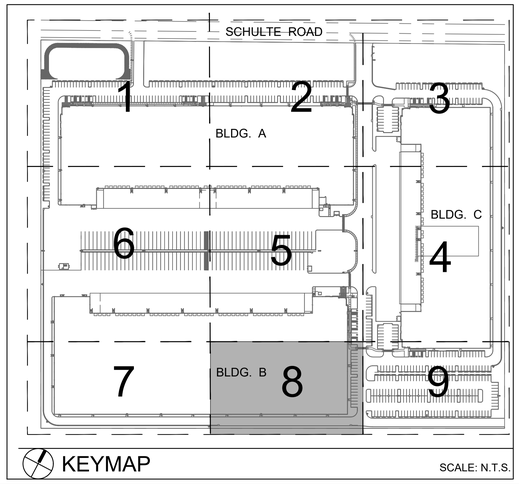

0 10 20 40 60

RGA
Office of Architectural Design
15231 Alton Parkway, Suite 100
Irvine, CA 92618
T 949-341-0920
FX 949-341-0922

CONSULTANT

RLA
8841 RESEARCH DR
SUITE 200
IRVINE • CA 92618
949.387.1323
RIDGELA.COM

PROFESSIONAL SEALS

REGISTERED LANDSCAPE ARCHITECT — JAMES J. ROSS — 4509 — 5/15/21 (SIGN) — 05/31/21 (EXP. DATE) — STATE OF CALIFORNIA

PROJECT NAME

LBA LOGISTIC CENTER III

14800 W. SCHULTE ROAD, TRACY, CA

LBA REALTY

3347 MICHELSON DRIVE, SUITE 200
IRVINE, CA 92612

D: 949-955-9333, C: 818-919-5336

MARK	DATE	DESCRIPTION
	06/15/20	1st COUNTY SUBMITTAL

RGA PROJECT NO:	19071.00
OWNER PROJECT NO:	00000.00
CAD FILE NAME:	--
DRAWN BY:	RLA
CHK'D BY:	RLA

COPYRIGHT
RGA, OFFICE OF ARCHITECTURAL DESIGN

SHEET TITLE

IRRIGATION PLAN

SHEET: L4.8

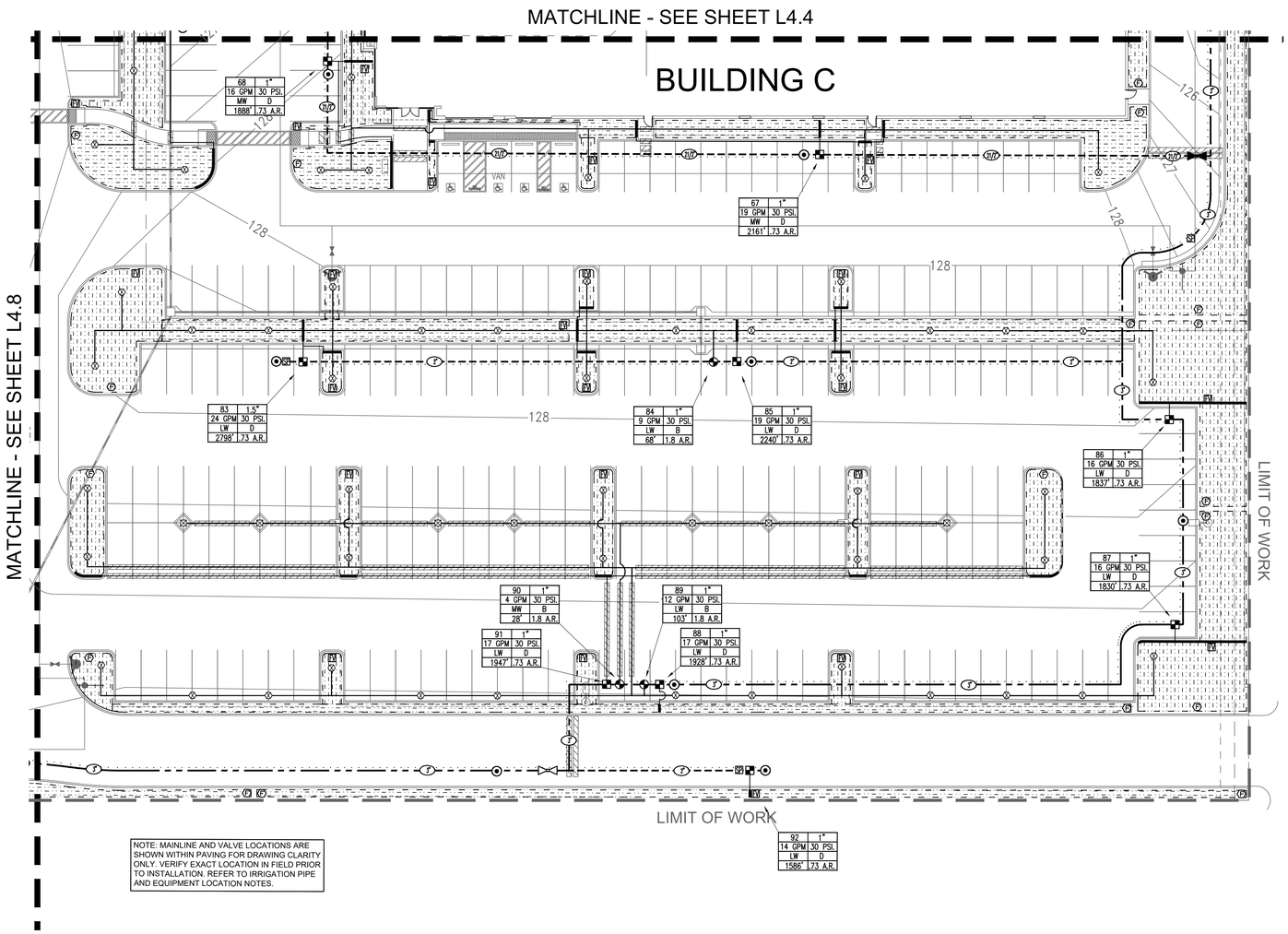

NOTE: MAINLINE AND VALVE LOCATIONS ARE SHOWN WITHIN PAVING FOR DRAWING CLARITY ONLY. VERIFY EXACT LOCATION IN FIELD PRIOR TO INSTALLATION. REFER TO IRRIGATION PIPE AND EQUIPMENT LOCATION NOTES.

IRRIGATION PIPE AND EQUIPMENT LOCATION NOTES

1. ALL IRRIGATION EQUIPMENT, SPRINKLERS AND PIPE THAT ARE SHOWN IN PAVING IS FOR DRAWING CLARITY ONLY. ALL EQUIPMENT SHALL BE INSTALLED WITHIN LANDSCAPED AREA. NO IRRIGATION EQUIPMENT SHALL BE LOCATED IN HARDSCAPE.
2. MAINLINE AND VALVE LOCATIONS SHOWN ON THIS DRAWING ARE DESIGNED AS DIAGRAMMATIC AND APPROXIMATE. THE LANDSCAPE CONTRACTOR SHALL STAKE ALL IRRIGATION PIPE / APPURTENANCE LOCATION FOR REVIEW AND APPROVAL. FINAL LOCATION AND EXACT POSITIONING OF ALL IRRIGATION SHALL BE DETERMINED BY THE OWNER'S AUTHORIZED REPRESENTATIVE. MINOR MODIFICATIONS OF ALL IRRIGATION APPURTENANCE AS REQUESTED BY THE OWNER SHALL BE PROVIDED BY THE CONTRACTOR AT NO ADDITIONAL COST. FAILURE TO OBTAIN OWNER'S APPROVAL PRIOR TO THE INSTALLATION SHALL CAUSE THE CONTRACTOR TO MAKE OWNER DIRECTED REVISION AT NO CHARGE. ALL PIPING AND WIRES SHALL BE SLEEVED UNDER PAVING, HARDSCAPE, ETC. AND AS DIRECTED BY OWNER'S AUTHORIZED REPRESENTATIVE.

IRRIGATION VALVE CALLOUT

CONTROLLER LETTER / VALVE NUMBER	A2	1.5" — VALVE SIZE
GALLONS PER MINUTE G.P.M.	16 GPM	30 PSI. — OPERATING PRESSURE (P.S.I.)
HYDROZONE PLANT FACTOR	LW	D — HYDROZONE / IRRIGATION TYPE - SEE HYDROZONE LEGEND (BELOW)
LANDSCAPE HYDROZONE AREA SQUARE FOOTAGE	2000'	.73 A.R. — APPLICATION RATE IN INCHES PER HOUR

HYDROZONE LEGEND

Hydrozone Number	Plant Factor (Water Use) - from WUCOLS Selected based on type of plants in hydrozones:	IE - Irrigation Efficiency
(1) Drip - Low Water / Plants	VLW = 0.1 - Very Low Water Use Plants	S = Spray .71
(2) Drip - Moderate Water / Plants	LW = 0.1 - 0.3 - Low Water Use Plants	MP = Rotary .73
(3) Rotator - Low Water / Plants	MW = 0.4 - 0.6 - Moderate Water Use Plants	R = Rotor .73
(4) Rotor - Low Water / Plants	HW = 0.7 - 0.9 - High Water Use Plants	B = Bubbler .77
(5) Bubbler - Low Water / Trees		D = Drip .81
(6) Bubbler - Moderate Water / Trees		

IRRIGATION NOTE CALLOUT

(1) — IRRIGATION CONSTRUCTION CALLOUT NUMBER.

[1] — P.O.C. AND CONTROLLER CALLOUT NUMBER.

LATERAL PIPE SIZING CHART		
0 TO 5	GPM	3/4" SCH. 40 PVC PIPE
6 TO 10	GPM	1" SCH. 40 PVC PIPE
11 TO 15	GPM	1-1/4" SCH. 40 PVC PIPE
16 TO 25	GPM	1-1/2" SCH. 40 PVC PIPE
26 TO 35	GPM	2" SCH. 40 PVC PIPE
36 TO 50	GPM	2-1/2" SCH. 40 PVC PIPE
51 TO 75	GPM	3" SCH. 40 PVC PIPE

DRIPLINE INTAKE/EXHAUST HEADER PIPE SIZING CHART	
INTAKE/EXHAUST HEADER MINIMUM SIZE OF 3/4 INCH.	
FLOW RANGE	**MINIMUM SIZE OF EXHAUST HEADER**
0 THROUGH 5 GPM	MINIMUM SIZE SHALL BE 3/4 INCH
6 THROUGH 10 GPM	MINIMUM SIZE SHALL BE 1 INCH
11 THROUGH 15 GPM	MINIMUM SIZE SHALL BE 1-1/4 INCH
16 THROUGH 25 GPM	MINIMUM SIZE SHALL BE 1-1/2 INCH
26 THROUGH 50 GPM	MINIMUM SIZE SHALL BE 2 INCH
NOTE: CONTRACTOR SHALL SIZE ALL DRIPLINE INTAKE/EXHAUST HEADERS PER PIPE SIZING CHART, IN NO INSTANCE SHALL PIPE SIZE EXCEED DESIGNATED GPM RANGE.	

FOR IRRIGATION LEGEND - SEE SHEET L4.0
FOR IRRIGATION NOTES - SEE SHEET L5.1
FOR IRRIGATION CALCULATIONS - SEE SHEET L5.2
FOR IRRIGATION DETAIL DETAILS - SEE SHEET L6.1 - L6.3
FOR LANDSCAPE DETAILS - SEE SHEET L9.1 - L9.5

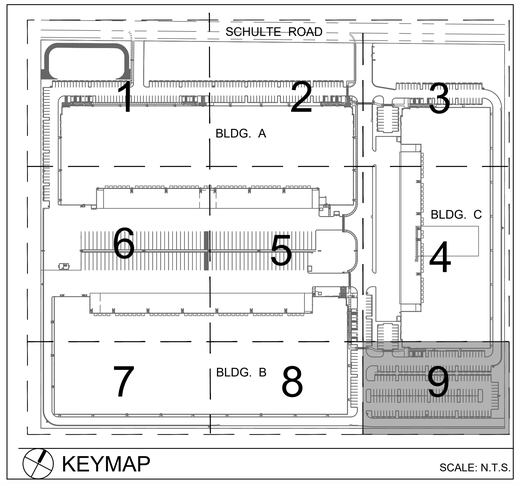

0 10 20 40 60

RGA
Office of Architectural Design
15231 Alton Parkway, Suite 100
Irvine, CA 92618
T 949-341-0920
FX 949-341-0922

CONSULTANT

RLA
8841 RESEARCH DR
SUITE 200
IRVINE • CA 92618
949.387.1323
RIDGELA.COM

PROFESSIONAL SEALS

REGISTERED LANDSCAPE ARCHITECT — JAMES J. RIDGE — No. 4004 — 5/15/24 (SIGN) — 05/31/21 (EXP. DATE) — STATE OF CALIFORNIA

PROJECT NAME

LBA LOGISTIC CENTER III

14800 W. SCHULTE
ROAD, TRACY, CA

LBA REALTY

LBA REALTY
3347 MICHELSON DRIVE, SUITE 200
IRVINE, CA 92612

D: 949-955-9333, C: 818-919-5336

MARK	DATE	DESCRIPTION
	06/15/20	1st COUNTY SUBMITTAL

RGA PROJECT NO:	19071.00
OWNER PROJECT NO:	00000.00
CAD FILE NAME:	--
DRAWN BY:	RLA
CHK'D BY:	RLA

COPYRIGHT
RGA, OFFICE OF ARCHITECTURAL DESIGN

SHEET TITLE

IRRIGATION PLAN

SHEET: L4.9

IRRIGATION SYSTEM MAINTENANCE SCHEDULE

MAINTENANCE OF THE IRRIGATION SYSTEM IS A NECESSARY AND CONTINUING PROCESS INVOLVING MONITORING, ADJUSTMENT AND REPAIR. REPAIRS CAN BE MINIMIZED BY INSTITUTING A MAINTENANCE PROGRAM. SOME IRRIGATION SYSTEM MAINTENANCE ACTIVITIES NEED TO BE DONE AT REGULAR PERIODIC INTERVALS. OTHERS PERFORMED ON A NORMAL BASIS.

WEEKLY
* TRIM FOLIAGE FROM AROUND SPRINKLER HEADS AS NECESSARY TO AVOID SPRAY BLOCKAGE.
* BRIEFLY ACTIVATE EACH CONTROL VALVE AND OBSERVE SPRINKLERS FOR PROPER COVERAGE AND OPERATION AND MISALIGNED BY MOVING OPERATIONS.
* CHECK FOR IRRIGATION OVER SPRAY OR RUNOFF AND CORRECT AS NEEDED.
*CHECK ALL DRIP LINES FOR CLOGGED EMITTERS AND CLEAN OR REPLACE AS NEEDED.

MONTHLY
* ADJUST PROGRAMMING OF THE AUTOMATIC IRRIGATION CONTROLLER(S) BASED ON OBSERVED FIELD CONDITIONS.
* CHECK THE SOIL MOISTURE WITH AN AUGER AND EVALUATE WITH REGARD TO DURATION AND FREQUENCY OF THE IRRIGATION CYCLES. FINE TUNE SYSTEMS WEEKLY OR BIWEEKLY AND MAKE CORRECTIONS AS NECESSARY. KEEP RECORDS OF ALL INFORMATION. MAINTAIN PET COCKS OF VALVE IN GOOD OPERATIONAL CONDITION, PET COCKS SHALL BE ONLY "FINGER TIGHT" WHEN IN THE CLOSED POSITION.
* CONTROLLER OPERATION: CHECK FIELD VALVES FOR SEQUENCING, TIMING, ACCURACY, AND GENERAL FUNCTION AT THE BEGINNING OF EACH WATERING SEASON.
* WALK AND CHECK ALL ON GRADE PIPE, CHECK FOR BREAKS OR LEAKS, CHECK STAKING AND POSITION OF ALL PIPE AND SPRINKLER HEADS INSTALLED ON SLOPE.
* FLUSH ALL DRIP SYSTEM LATERAL LINES AT EACH END OF DRIP ZONES.
* CHECK AND CLEAN ALL DRIP REMOTE CONTROL BASKET FILTERS.

CONTINUALLY
* CLEAN SOIL AND DEBRIS FROM SPRINKLER BODIES, NOZZLES AND DRIP SYSTEMS TO ENSURE PROPER WATER DISCHARGE.
* STRAIGHTEN SPRINKLERS AND ADJUST NOZZLES TO INSURE PROPER WATER DISCHARGE.
* MAINTAIN ALL SPRINKLERS IN GOOD OPERATING ORDER, INCLUDING PROPER COVERAGE ADJUSTMENTS. REPAIR OR REPLACE SPRINKLERS AS NEEDED.
* MAINTAIN ELECTRIC CONTROL VALVE BOXES FREE OF DIRT AND DEBRIS.
* ADJUST WATER APPLICATIONS ACCORDING TO CHANGES IN THE WEATHER. CONTRACTOR SHALL BE RESPONSIBLE FOR DAMAGE RESULTING FROM EITHER OVER OR UNDER-WATERING.

AS NEEDED
* EXTEND THE HEIGHT OF SPRINKLERS AS NECESSARY IN SHRUB AREAS TO AVOID INTERFERENCE FROM ADJACENT FOLIAGE.
* THE STAFF SHALL REPAIR OR REPLACE ANY DAMAGED OR MALFUNCTIONING EQUIPMENT WITHIN ONE WEEK OF DETECTION.
* TURN OFF CONTROLLERS TEMPORARILY DURING PERIODS OF RAINFALL.

EQUIPMENT REPLACEMENT
* REPLACE ANY IRRIGATION VALVES, SPRINKLERS, DRIP LINE OR OTHER COMPONENTS WITH REPLACEMENT OF THE EXACT TYPE, GPM AND MANUFACTURE AS CALLED FOR IN THE ORIGINAL IRRIGATION PLANS.

MAJOR REPAIRS
* WHERE CONDITIONS DEVELOP WHICH CAN NOT BE HANDLED BY ROUTINE MAINTENANCE, THEY SHOULD BE BROUGHT TO THE ATTENTION OF THE OWNER.
* ALL DAMAGE NOT RESULTING FROM CONTRACTOR'S ACTIVITIES OR NEGLIGENCE SHOULD BE BROUGHT TO THE OWNER'S ATTENTION.
* DURING TIMES WHEN THE WATER SUPPLY IS CUT OFF OR THE IRRIGATION SYSTEM IS OTHERWISE INOPERABLE, THE LANDSCAPE SHOULD BE CAREFULLY MONITORED FOR SIGNS OF WATER STRESS. START A HAND WATERING PROGRAM IMMEDIATELY FOR ALL STRESSED LANDSCAPES. NOTIFY OWNER IN WRITING IF THIS OCCURS.

LANDSCAPE IRRIGATION AUDIT SCHEDULE
* LANDSCAPE IRRIGATION AUDITS SHALL BE PERFORMED IN ACCORDANCE WITH THE STATE OF CALIFORNIA WATER MANAGEMENT PROGRAM AS DESCRIBED IN THE "LANDSCAPE IRRIGATION AUDITOR HANDBOOK".
* AUDITS SHALL BE CONDUCTED BY CERTIFIED LANDSCAPE IRRIGATION AUDITOR.
* THE FIRST LANDSCAPE IRRIGATION AUDIT SHALL BE PERFORMED PRIOR TO ACCEPTANCE AND SHALL BE REPEATED EVERY FIVE YEARS THEREAFTER.

KEEPING OF RECORDS
* THE CONTRACTOR SHALL KEEP PERMANENT RECORDS OF ALL PERFORMED MAINTENANCE TASKS.
* RECORD ALL WATER USAGE AND CHANGES IN THE CONTROLLER TIMING, INCLUDING OFF TIMES DURING RAINFALL.
* RECORD ALL ACTIVITIES PERFORMED DURING THE QUARTERLY REVIEW.
* RECORD ALL PROPOSED AND EXECUTED REPAIRS.
* RECORD ALL TIMES WHEN THE IRRIGATION SYSTEMS ARE NOT OPERABLE.
* RECORD ALL PERFORMED IRRIGATION AUDITS.

COLOR CHART NOTE:
AS A REQUIREMENT THE AUTOMATIC CONTROLLER SHALL CONSIST OF A NEATLY DRAWN 11"x17" LAMINATED IRRIGATION PLAN AND COLORED ZONE MAP LAYOUT CHART. LAYOUT CHART SHALL BE COLOR CODED INDICATING LOCATION OF ALL CONTROLS, PIPING, SLEEVES, HEADS (INCLUDING TYPE), VALVES AND CONNECTION TO WATER SERVICE.

IRRIGATION WATER AUDIT NOTE:
LANDSCAPE CONTRACTOR TO PROVIDE AN IRRIGATION AUDIT, IN COMPLIANCE WITH THE STATE OF CALIFORNIA LANDSCAPE WATER MANAGEMENT PROGRAM, SHALL BE PERFORMED BY A CERTIFIED IRRIGATION AUDITOR, OTHER THAN THE DESIGNER OR INSTALLER, PRIOR TO TURNOVER OF PROJECT AND EVERY 5 YEARS THEREAFTER. A SCHEDULE SHALL BE ESTABLISHED AND SUBMITTED TO THE CITY OF AT LEAST ONCE EVERY FIVE YEARS AS REQUIRED BY THE CITY. THE REGULAR MAINTENANCE SCHEDULE COUPLED WITH THE AUDITS SHOULD HELP TO MAINTAIN THE IRRIGATION EFFICIENCY AS INTENDED IN THE DESIGN. IRRIGATION SYSTEM SHALL BE TESTED AND MAINTAINED ON A MONTHLY BASIS BY THE MAINTENANCE STAFF.

AT A MINIMUM, AUDITS SHALL BE IN ACCORDANCE WITH THE LATEST STATE OF CALIFORNIA LANDSCAPE WATER MANAGEMENT PROGRAM AS DESCRIBED IN THE LATEST LANDSCAPE IRRIGATION AUDITOR HANDBOOK, PREPARED FOR THE CALIFORNIA DEPARTMENT OF WATER RESOURCES, WATER CONSERVATION OFFICE, THE ENTIRE DOCUMENT, WHICH IS HEREBY INCORPORATED BY REFERENCE.

THE SCHEDULE SHALL PROVIDE FOR LANDSCAPE IRRIGATION AUDITS TO BE CONDUCTED BY A QUALIFIED INDIVIDUAL, OTHER THAN THE DESIGNER OR INSTALLER, AS DETERMINED BY THE DIRECTOR AT LEAST ONCE EVERY FIVE YEARS IN ACCORDANCE WITH THE REQUIREMENTS OF THE COUNTY.

Irrigation Installation Notes

1. THE CONTRACTOR SHALL OBTAIN, COORDINATE AND PAY FOR ANY AND ALL PERMITS AND ALL INSPECTIONS AS REQUIRED.
2. THE CONTRACTOR SHALL BE RESPONSIBLE AND LIABLE FOR ANY AND ALL DAMAGES TO OPERATIONS OR WORK OF OTHER CONTRACTORS. CONTRACTOR SHALL BE RESPONSIBLE FOR COORDINATION OF ACTIVITIES WITH ALL AGENCIES AND OTHER TRADES.
3. THE CONTRACTOR SHALL BE RESPONSIBLE AND LIABLE FOR ANY ENCROACHMENT INTO ADJACENT PROPERTY, R.O.W.'S, EASEMENTS, SETBACKS OR ANY OTHER LEGAL PROPERTY RESTRICTIONS EITHER MARKED OR UNMARKED.
4. IT SHALL BE THE RESPONSIBILITY OF THE CONTRACTOR TO FAMILIARIZE HIMSELF WITH ALL UNDERGROUND UTILITIES. CONTRACTOR SHALL REPAIR OR REPLACE, AT NO ADDITIONAL COST TO THE OWNER, ANY DAMAGE TO UNDERGROUND UTILITIES THAT MAY OCCUR.
5. THE CONTRACTOR SHALL OBTAIN THE PERTINENT ENGINEERING PLANS BEFORE BEGINNING WORK.
6. THE CONTRACTOR SHALL VERIFY ALL CONDITIONS AND DIMENSIONS SHOWN ON PLANS AT THE SITE PRIOR TO COMMENCEMENT OF ANY WORK. ALL DISCREPANCIES SHALL BE IMMEDIATELY REPORTED TO PROJECT LANDSCAPE ARCHITECT FOR DIRECTION. ANY CONTINUATION OF WORK IS AT THE CONTRACTOR'S RISK AND EXPENSE.
7. THE CONTRACTOR SHALL VERIFY THE LOCATIONS OF ALL EXISTING UTILITIES, STRUCTURES AND SERVICES BEFORE COMMENCING WORK. THE LOCATIONS OF UTILITIES, STRUCTURES AND SERVICES SHOWN IN THESE PLANS ARE APPROXIMATE ONLY. ANY DISCREPANCIES BETWEEN THESE PLANS AND ACTUAL FIELD CONDITIONS SHALL BE REPORTED TO THE PROJECT LANDSCAPE ARCHITECT FOR DIRECTION.
8. BEFORE ANY WORK COMMENCES, A CONFERENCE SHALL BE HELD WITH THE CITY'S PUBLIC WORKS INSPECTOR, LANDSCAPE ARCHITECT AND THE CONTRACTOR, REGARDING GENERAL REQUIREMENTS OF THIS WORK.
9. INSTALL ALL IRRIGATION COMPONENTS ACCORDING TO LOCAL CODES AND ORDINANCES.
10. THE IRRIGATION WATER METER IS TO BE PROVIDED BY THE OWNER UNLESS SHOWN OTHERWISE ON THE PLANS. CONTRACTOR IS RESPONSIBLE FOR INSTALLATION OF ALL IRRIGATION EQUIPMENT DOWNSTREAM OF THE POINT OF CONNECTION (P.O.C.) AT THE IRRIGATION WATER METER.
11. ALL IRRIGATION EQUIPMENT NOT OTHERWISE DETAILED OR SPECIFIED SHALL BE INSTALLED AS PER MANUFACTURER'S RECOMMENDATIONS AND SPECIFICATIONS.
12. THE CONTRACTOR SHALL NOT WILLFULLY INSTALL THE IRRIGATION SYSTEM AS SHOWN ON THE DRAWINGS WHEN IT IS OBVIOUS IN THE FIELD THAT OBSTRUCTIONS (INCLUDING EXISTING AND/OR NEW PLANT MATERIAL), GRADE DIFFERENCES OR DIFFERENCES IN THE AREA'S DIMENSIONS EXIST THAT MIGHT NOT HAVE BEEN CONSIDERED IN THE DESIGN. SUCH OBSTRUCTIONS OR DIFFERENCES SHALL BE BROUGHT TO THE ATTENTION OF THE LANDSCAPE ARCHITECT. IN THE EVENT THIS NOTIFICATION IS NOT PERFORMED, THE CONTRACTOR SHALL ASSUME FULL RESPONSIBILITY FOR ANY REVISIONS NECESSARY.
13. THE WORK SHOWN ON THESE PLANS IS DIAGRAMMATIC; ALL ITEMS, I.E. CONTROLLERS, VALVES, MAINLINES, SLEEVES, WIRES, IRRIGATION HEADS, ETC. ARE SHOWN IN THEIR APPROXIMATE LOCATIONS ONLY. DO NOT SCALE DIMENSIONS. DETAIL DRAWINGS MAY CLARIFY LOCATIONS OF SOME ITEMS. THE CONTRACTOR SHALL NOT LOCATE ANY ITEMS WHERE IT IS OBVIOUS THAT THEY ARE IN CONFLICT WITH UNDERGROUND UTILITIES, STRUCTURES, OTHER IMPROVEMENTS, OR VEHICULAR OR PEDESTRIAN SAFETY CONSIDERATIONS.
14. CONTROLLER LOCATIONS ARE APPROXIMATE. FINAL LOCATION OF THE AUTOMATIC CONTROLLER AND THE BACKFLOW DEVICE SHALL BE APPROVED BY THE OWNER AND THE LANDSCAPE ARCHITECT PRIOR TO INSTALLATION.
15. ALL CONSTANT PRESSURE LINES SHALL BE TESTED FOR 3 HOURS UNDER A HYDROSTATIC PRESSURE OF 150 POUNDS PER SQUARE INCH AND BE PROVEN WATERTIGHT. CONTRACTOR SHALL PROVIDE ALL EQUIPMENT FOR HYDROSTATIC TESTS. HYDROSTATIC TESTS SHALL BE PERFORMED IN THE PRESENCE OF THE LANDSCAPE ARCHITECT, CITY PUBLIC WORKS INSPECTOR OR, IF APPROVED BY LANDSCAPE ARCHITECT, CONTRACTOR MAY E-MAIL DIGITAL PHOTOGRAPHS OF THE PRESSURE GAUGE TO THE LANDSCAPE ARCHITECT AT BEGINNING AND END OF TEST PERIOD.
16. 120-VOLT ELECTRICAL POWER OUTLET AT THE AUTOMATIC CONTROLLER LOCATION SHALL BE PROVIDED PER THE ELECTRICAL ENGINEER'S PLANS AND SPECIFICATIONS. IT SHALL BE THE RESPONSIBILITY OF THE CONTRACTOR TO COORDINATE ELECTRICAL SERVICE WITH THE GENERAL CONTRACTOR AND TO MAKE THE FINAL HOOK-UP FROM THE ELECTRICAL OUTLET TO THE AUTOMATIC CONTROLLER.
17. ALL LOCAL MUNICIPAL AND STATE LAWS, RULES AND REGULATIONS GOVERNING OR RELATING TO ANY PORTION OF THIS WORK ARE HEREBY INCORPORATED INTO AND MADE A PART OF THESE SPECIFICATIONS AND THEIR PROVISIONS SHALL BE CARRIED OUT BY THE CONTRACTOR.
18. BACKFLOW DEVICE SHALL BE INSTALLED IN GROUND COVER AREA WHEREVER POSSIBLE. FINAL LOCATION SHALL BE DETERMINED BY THE OWNER'S AUTHORIZED REPRESENTATIVE AND MAY VARY FROM THAT INDICATED ON THE DRAWINGS.
19. QUICK COUPLER VALVES, CONTROL VALVES, AND SHUT-OFF VALVES SHALL BE INSTALLED IN GROUND COVER AREAS WHEREVER POSSIBLE.
20. PIPING AND WIRE CONDUIT PENETRATIONS THROUGH WALLS AND INSTALLATION EQUIPMENT UNDER PAVING SHALL BE INSTALLED IN SCH 40 PVC SLEEVES, AS CALLED OUT ON PLANS, OR AS PER LOCAL CODES AND MUST BE COORDINATED WITH THE GENERAL CONTRACTOR AND CONTRACTORS OF ALL VARIOUS TRADES THAT MAY BE INVOLVED TO ELIMINATE PROBLEMS THAT MAY ARISE FROM INACCESSIBILITY OR DAMAGE TO ANOTHER TRADE'S WORK. PIPING AND WIRE CONDUIT PENETRATIONS THROUGH EXISTING WALLS SHALL BE CORE DRILLED AND SLEEVED PER ABOVE, UNLESS AN EXISTING SLEEVE IS AVAILABLE FOR RE-USE WHICH WILL NOT SIGNIFICANTLY AFFECT THE SYSTEM DESIGN.
21. USE CHECK VALVES AS REQUIRED TO ELIMINATE LOW HEAD DRAINAGE.
22. THE CONTRACTOR SHALL INSTALL KBI SERIES ANTI-DRAIN VALVES ON ALL LATERALS IN AREAS WHERE SLOPE OF GRADE EXCEEDS 4:1, WHERE POST VALVE SHUT-OFF DRAINING OF THE IRRIGATION OCCURS, OR AS DIRECTED BY THE OWNER'S AUTHORIZED REPRESENTATIVE.
23. THE CONTRACTOR SHALL ONLY APPLY SUFFICIENT WATER TO PROMOTE HEALTHY GROWTH OF PLANT MATERIAL. AT NO TIME SHALL THE CONTRACTOR APPLY WATER AT A RATE OF FREQUENCY WHICH CAUSES RUNOFF OR OVER-SATURATION OF THE SOIL.
24. THE CONTRACTOR SHALL FLUSH AND ADJUST ALL IRRIGATION, DRIP AND SPRAY, FOR OPTIMUM PERFORMANCE AND TO PREVENT OVERSPRAY ONTO ADJACENT PAVING, WALLS OR OTHER HARDSCAPE ELEMENTS TO THE EXTENT POSSIBLE. THIS SHALL INCLUDE SELECTING THE BEST DEGREE OF ARC TO FIT THE EXISTING SITE CONDITIONS AND ADJUSTING THE FLOW CONTROL AT EACH VALVE TO OBTAIN THE OPTIMUM OPERATING FLOW FOR EACH SYSTEM.
25. WHEN RADIUS OF SPRINKLER HEADS AS REQUIRED FOR PROPER COVERAGE IS LESS THAN RADIUS SHOWN ON LEGEND, THE CONTRACTOR SHALL EQUIP SPRINKLER HEAD WITH A PRESSURE COMPENSATING SCREEN (PCS) FOR LOW FLOW AND RADIUS CONTROL.
26. USE ADJUSTABLE ARC NOZZLES FOR ALL HEADS LOCATED IN AREAS WHERE A STANDARD ARC PATTERN SPRAYS OVER ONTO ADJACENT PAVING, WALLS OR OTHER HARDSCAPE ELEMENTS. ADJUSTABLE ARC NOZZLE SHOULD HAVE THE SAME RADIUS OF THROW AS THE NOZZLE BEING REPLACED.
27. NO OVERSPRAY OR LOW HEAD DRAINAGE SHALL BE ALLOWED.
28. WHEN VERTICAL OBSTRUCTIONS (LIGHT POLES, FIRE HYDRANTS, TREES, ETC.) INTERFERE WITH THE SPRAY PATTERN OF THE SPRINKLER HEADS SO AS TO PREVENT PROPER COVERAGE, THE CONTRACTOR SHALL FIELD ADJUST THE SPRINKLER SYSTEM BY INSTALLING A QUARTER CIRCLE OR HALF CIRCLE SPRINKLER HEAD ON EACH SIDE OF THE OBSTRUCTION SO AS TO PROVIDE PROPER COVERAGE. ALL ADJUSTMENTS SHALL BE MADE AT NO ADDITIONAL COST TO THE OWNER.
29. PIPE SIZES SHALL CONFORM TO THOSE SHOWN ON THE DRAWING. NO SUBSTITUTIONS OF SMALLER PIPE SIZES SHALL BE PERMITTED, BUT SUBSTITUTIONS OF LARGER SIZES MAY BE APPROVED. ALL DAMAGED AND REJECTED PIPE SHALL BE REMOVED FROM THE SITE IMMEDIATELY UPON REJECTION.
30. ALL ELECTRICAL CONTROL WIRE SHALL BE DIRECT BURIAL, #14 UL APPROVED, IN AN 18" DEEP TRENCH, INSTALLED UNDERNEATH AND ATTACHED WITH PLASTIC TIE 10' O.C. TO THE MAINLINE PIPE WHEN RUN IN THE SAME TRENCH. WIRE CONNECTORS SHALL BE PENTITE OR DRI-SPLICE ONLY.
31. ALL AUTOMATIC CONTROLLER PROGRAMS MUST BE SET TO OPERATE BETWEEN THE HOURS OF 10 P.M. AND 6 A.M.
32. THE ENTIRE SPRINKLER SYSTEM SHALL BE GUARANTEED BY THE CONTRACTOR AS TO MATERIAL AND WORKMANSHIP, INCLUDING THE SETTLING OF BACKFILLED AREAS AND TRENCHES FOR A PERIOD OF ONE YEAR FOLLOWING THE DATE OF FINAL ACCEPTANCE OF THE WORK. SHOULD ANY OPERATION DIFFICULTIES IN CONNECTION WITH THE SPRINKLER SYSTEM DEVELOP WITHIN THE SPECIFIED GUARANTEE PERIOD, WHICH IN THE OPINION OF THE OWNER MAY BE DUE TO INFERIOR MATERIAL AND/OR WORKMANSHIP, SAID DIFFICULTIES SHALL BE IMMEDIATELY CORRECTED BY THE CONTRACTOR TO THE SATISFACTION OF THE OWNER AT NO ADDITIONAL COST.
33. THE CONTRACTOR SHALL AT ALL TIMES PROTECT HIS WORK FROM DAMAGE AND THEFT AND REPLACE ALL DAMAGED OR STOLEN PARTS AT HIS EXPENSE UNTIL THE WORK IS ACCEPTED IN WRITING BY THE OWNER.
34. THE IRRIGATION SYSTEM DESIGN IS BASED ON THE MINIMUM OPERATING PRESSURE AND THE MAXIMUM FLOW DEMAND SHOWN ON THE IRRIGATION DRAWINGS AT EACH POINT OF CONNECTION. THE CONTRACTOR SHALL VERIFY WATER PRESSURE IN THE FIELD PRIOR TO CONSTRUCTION TO DETERMINE IF IT IS SUFFICIENT TO OPERATE SYSTEMS AS DESIGNED. REPORT ANY DIFFERENCE BETWEEN THE WATER PRESSURE INDICATED ON THE DRAWINGS AND THE ACTUAL PRESSURE READING AT THE IRRIGATION POINT OF CONNECTION TO THE PROJECT LANDSCAPE ARCHITECT. IN THE EVENT PRESSURE DIFFERENCES ARE NOT REPORTED PRIOR TO START OF CONSTRUCTION, THE CONTRACTOR SHALL ASSUME FULL RESPONSIBILITY FOR ANY REVISIONS NECESSARY AT NO ADDITIONAL COST TO THE OWNER.
35. AFTER INSTALLATION OF THE IRRIGATION SYSTEM IS COMPLETED, THE CONTRACTOR SHALL PERFORM A COVERAGE AND PRESSURE TEST IN THE PRESENCE OF THE LANDSCAPE ARCHITECT AND CITY PUBLIC WORKS INSPECTOR TO DETERMINE IF THE IRRIGATION PRESSURE AND COVERAGE FOR PLANTING AREAS IS ADEQUATE AND COMPLETE. FURNISH ALL MATERIALS AND PERFORM ALL WORK REQUIRED TO CORRECT ANY INADEQUACIES OF PRESSURE AND COVERAGE DUE TO DEVIATIONS FROM THE PLANS OR BECAUSE DISCREPANCIES BETWEEN THE PLANS AND ACTUAL FIELD CONDITIONS WERE NOT BROUGHT TO THE ATTENTION OF THE LANDSCAPE ARCHITECT PRIOR TO INSTALLATION.

Irrigation General Notes

1. IRRIGATION PLANS ARE DESIGNED AS DIAGRAMMATIC AND APPROXIMATE. ALL IRRIGATION EQUIPMENT, SPRINKLERS AND PIPE ARE TO BE INSTALLED IN LANDSCAPED AREA. NO IRRIGATION EQUIPMENT SHALL BE LOCATED IN HARDSCAPE. THE IRRIGATION CONTRACTOR SHALL ENSURE NO OVERSPRAY ONTO HARDSCAPE, STREETS, WALLS OR ANY OTHER HARDSCAPE / STRUCTURE.
2. MAINLINE SHOWN WITHIN PAVING FOR DRAWING CLARITY ONLY, ACTUAL MAINLINE LOCATION TO BE A MINIMUM OF 18" OFF ADJACENT HARDSCAPE AND OTHER OBSTACLES TYP.
3. WHEN VERTICAL OBSTRUCTIONS (PROPS, STREET LIGHTS, TREES, ETC.) INTERFERE WITH THE SPRAY PATTERN OF THE SPRINKLER HEADS SO AS TO PREVENT PROPER COVERAGE, THE IRRIGATION CONTRACTOR SHALL FIELD ADJUST THE SPRINKLER SYSTEM BY INSTALLING A QUARTER CIRCLE OR HALF CIRCLE SPRINKLER HEAD ON EACH SIDE OF THE OBSTRUCTION SO AS TO PROVIDE PROPER COVERAGE. ALL ADJUSTMENTS SHALL BE MADE AT NO ADDITIONAL COST TO THE OWNER.
4. WHEN RADIUS OF SPRINKLER HEADS, REQUIRED FOR PROPER COVERAGE, IS LESS THAN RADIUS SHOWN ON LEGEND, THE CONTRACTOR SHALL EQUIP SPRINKLER HEAD WITH A RAIN BIRD "PCS" PRESSURE COMPENSATING SCREEN FOR LOW FLOW AND RADIUS CONTROL.
5. USE ADJUSTABLE ARC NOZZLES FOR ALL HEADS LOCATED IN AREAS WHERE A STANDARD ARC PATTERN OVER SPRAYS ONTO BUILDINGS, WALLS OR PAVING. ADJUSTABLE ARC NOZZLE SHOULD HAVE THE SAME RADIUS OF THROW AS THE NOZZLE BEING REPLACED.
6. OVERHEAD IRRIGATION SHALL NOT BE PERMITTED WITHIN 24 INCHES OF ANY NON-PERMEABLE SURFACE, (PER STATE ORDINANCE AB 1881.) ABSOLUTELY NO OVERSPRAY OR LOW HEAD DRAINAGE IS ALLOWED.
7. IRRIGATION SLEEVES SHOWN FOR MAJOR STREET AND DRIVEWAY CROSSINGS FOR CLARITY ONLY. CONTRACTOR SHALL INSTALL SLEEVING BELOW ALL PAVING, HARDSCAPE, ETC. AND AS DIRECTED BY OWNER'S AUTHORIZED REPRESENTATIVE.
8. ALL PIPING AND WIRE SHALL BE SLEEVED UNDER PAVING / HARDSCAPE. ALL SLEEVES TO BE MINIMUM 2X DIAMETER OF PIPE SLEEVES. ALL MAINLINE SHALL BE ACCOMPANIED WITH A MINIMUM 2-INCH DIAMETER WIRE SLEEVE. SLEEVING TO EXTEND MINIMUM 12 INCHES BEYOND PAVING.
9. ALL IRRIGATION ADJACENT TO BUILDING SHALL BE INSTALLED A MINIMUM DISTANCE OF 12" INCHES FROM BUILDING TO AVOID WATER/OVERSPRAY ONTO BUILDING OR WINDOWS. ALL LAYOUT SHALL BE CONFIRMED IN FIELD WITH OWNER'S REPRESENTATIVE PRIOR TO COMMENCING WORK.
10. TREE BUBBLERS AND LATERAL LINES ARE SHOWN WITHIN PAVING AND BUILDINGS FOR DRAWING CLARITY ONLY, ACTUAL LOCATION TO BE WITHIN PLANTER. BUBBLERS SHALL BE ALIGNED WITH TREES AND AS DIRECTED BY OWNER'S AUTHORIZED REPRESENTATIVE. CONFIRM ALL LAYOUT IN FIELD WITH OWNER'S AUTHORIZED REPRESENTATIVE PRIOR TO COMMENCING WORK.
11. CONTROLLER LOCATION SHOWN ON THIS DRAWING IS APPROXIMATE. THE LANDSCAPE CONTRACTOR SHALL STAKE OUT THE CONTROLLER LOCATION FOR REVIEW AND APPROVAL BY THE OWNER PRIOR TO INSTALLATION OF THIS EQUIPMENT. THE LANDSCAPE CONTRACTOR IS RESPONSIBLE FOR ELECTRICAL CONNECTION FROM 120 VOLT POWER SOURCE TO THE CONTROLLER AND ALL WIRE CONNECTIONS FROM ALL VALVES AND APPURTENANCE VALVES TO TERMINAL STRIP. REFER TO ELECTRICAL ENGINEER'S DRAWING'S FOR POWER SOURCE. ALL ELECTRICAL WORK SHALL CONFORM TO LOCAL STATE AND NATIONAL ELECTRICAL CODES AND REGULATIONS. FINAL LOCATION AND EXACT POSITIONING OF THE CONTROLLER SHALL BE DETERMINED BY THE OWNER. MINOR MODIFICATIONS OF CONTROLLER REQUESTED BY THE OWNER SHALL BE PROVIDED BY THE CONTRACTOR AT NO ADDITIONAL COST TO THE OWNER. FAILURE TO OBTAIN OWNER'S APPROVAL PRIOR TO THE INSTALLATION SHALL CAUSE THE CONTRACTOR TO MAKE OWNER DIRECTED REVISIONS AT NO ADDITIONAL COST TO THE OWNER.
12. ELECTRIC CONTROL VALVES AND ISOLATION VALVE LOCATIONS ON THIS DRAWING ARE APPROXIMATE. THE LANDSCAPE CONTRACTOR SHALL STAKE OUT EACH ELECTRICAL CONTROL VALVE AND ISOLATION VALVE LOCATION FOR REVIEW AND APPROVAL BY OWNER PRIOR TO INSTALLATION OF ALL VALVES. FINAL LOCATION AND EXACT POSITIONING FOR ELECTRIC CONTROL VALVES AND ISOLATION VALVES SHALL BE DETERMINED BY THE OWNER. MINOR MODIFICATIONS OF ELECTRIC CONTROL VALVES AND ISOLATION VALVE LOCATIONS AS REQUESTED BY THE OWNER SHALL BE PROVIDED BY THE CONTRACTOR AT NO ADDITIONAL COST TO THE OWNER. FAILURE TO OBTAIN OWNER'S APPROVAL PRIOR TO THE INSTALLATION SHALL CAUSE THE CONTRACTOR TO MAKE OWNER DIRECTED REVISIONS AT NO ADDITIONAL COST TO THE OWNER. IN GENERAL, UNLESS OTHERWISE DIRECTED BY OWNER, ALL VALVES SHALL BE INSTALLED THREE FEET FROM EDGE OF HARDSCAPE, WALK OR CURB IN SHRUB PLANTING AREAS.
13. BACKFLOW PREVENTER LOCATION SHOWN ON THIS DRAWING ARE APPROXIMATE. THE LANDSCAPE CONTRACTOR SHALL STAKE OUT THE BACKFLOW PREVENTER, AND ALL IRRIGATION APPURTENANCE LOCATION FOR REVIEW AND APPROVAL BY OWNER, LANDSCAPE ARCHITECT AND CITY'S PUBLIC WORKS INSPECTOR PRIOR TO INSTALLATION OF THIS EQUIPMENT. FINAL LOCATION AND EXACT POSITIONING OF BACKFLOW PREVENTER AND ALL IRRIGATION APPURTENANCE SHALL BE DETERMINED BY THE OWNER. MINOR MODIFICATIONS OF THE BACKFLOW PREVENTER, AND ALL IRRIGATION APPURTENANCE AS REQUESTED BY THE OWNER SHALL BE PROVIDED BY THE CONTRACTOR AT NO ADDITIONAL COST TO THE OWNER. FAILURE TO OBTAIN OWNER'S APPROVAL PRIOR TO THE INSTALLATION SHALL CAUSE THE CONTRACTOR TO MAKE OWNER DIRECTED REVISION AT NO CHARGE.

CONTROLLER SETUP NOTES:

1. CONTRACTOR IS TO ENGAGE AND CONSULT CONTROLLER MANUFACTURE AT INCEPTION OF PROJECT AND CONTROLLER SETUP FOR COORDINATION PURPOSES.
2. CONTROLLER SETUP SHALL INCLUDE:
   A. FLOW RATES ACQUIRED FOR ALL STATIONS.
   B. STATION DESCRIPTION.
   C. STATION GROUP'S NAMES BY GROUP AND ASSIGNED TO CORRECT PROGRAM.
   D. STATION PRIORITIES.
   E. ALERT ACTIONS SET TO HIGH FLOW ALERT/SHUT OFF AND LOW FLOW ALERT/NO ACTION.
   F. ALL WEATHER SETTINGS AND CENTRAL CONTROL COMMUNICATION FOR "ET" AND RAIN USE.
   G. BUDGETS SETUP IN PROGRAMMING.
   H. CONTRACTOR SHALL PROVIDE CONTROLLER ASSEMBLY INSTALLATION CERTIFICATION **PRIOR** TO START OF 90 DAY MAINTENANCE PERIOD.
   I. ALL PROGRAMS SHALL BE WATERING IN THE WATER BUDGET ALLOCATED BY THE WATER DISTRICT **PRIOR** TO COMMENCEMENT OF MAINTENANCE.

RGA
Office of Architectural Design
15231 Alton Parkway, Suite 100
Irvine, CA 92618
T 949-341-0920
FX 949-341-0922

CONSULTANT
RLA
8841 RESEARCH DR
SUITE 200
IRVINE • CA 92618
949.387.1323
RIDGELA.COM

PROFESSIONAL SEALS
REGISTERED LANDSCAPE ARCHITECT
JAMES J. RIDGE
LIC. #2809
(Signature)
6/15/20
(Date)
05/31/21
(Exp. Date)
STATE OF CALIFORNIA

PROJECT NAME
LBA LOGISTIC CENTER III
14800 W. SCHULTE ROAD, TRACY, CA

LBA REALTY
LBA REALTY
3347 MICHELSON DRIVE, SUITE 200
IRVINE, CA 92612
D: 949-955-9333, C: 818-919-5336

MARK	DATE	DESCRIPTION
	06/15/20	1st COUNTY SUBMITTAL

RGA PROJECT NO:	19071.00
OWNER PROJECT NO:	00000.00
CAD FILE NAME:	--
DRAWN BY:	RLA
CHK'D BY:	RLA

COPYRIGHT
RGA, OFFICE OF ARCHITECTURAL DESIGN

SHEET TITLE
IRRIGATION NOTES

SHEET: L5.1

SEASONAL IRRIGATION SCHEDULE

Project Name: LBA Logistics Center
Meter Number: #1

Cycles Per Day:	1
Days Per Week:	7

Evapotranspiration Rates:

Eto Historical:	57.75			
	Winter	Spring	Summer	Fall
Eto Per Day	0.06	0.17	0.27	0.13
Eto Per Season	5.6	15.4	24.7	12.1

Irrigation Efficiency (%):

Rotors:	0.75
Spray Heads:	0.71
Bubbler Heads:	0.77
Drip Line:	0.81
Drip Emitter:	0.81
Stream Rotary:	0.75
Micro Spray	0.75

Precipitation Rate (in/hr)

Rotors:	0.45
Spray Heads:	1.60
Bubbler Heads:	1.80
Drip Line:	0.73
Drip Emitter:	0.40
Stream Rotary:	0.45
Micro Spray:	0.61

Run Times (Minutes per Day) = (60 x Eto x PF) ÷ (PR x IE) x (RD) ÷ (C)
Eto = Daily Evapotranspiration Rate
IE = Irrigation Efficiency
PR = Precipitation Rate (Inches per Hour)
RD = Run days (Seasonal Total)
C = Cycles per Day
PF = Plant Factor (Kc)
60 = Conversion to minutes

Valve Quantity	Water Use Type	Planting	Irrigation Type	Kc	PR	IE	Winter (Dec, Jan, Feb)	Spring (Mar, Apr, May)	Summer (Jun, Jul, Aug)	Fall (Sep, Oct, Nov)	
3	Low	Shrub	Spray	0.30	1.60	0.71	1	3	4	2	Min. Per Day
29	Low	Shrub	Drip Line	0.30	0.73	0.81	2	5	8	4	Min. Per Day
24	Mod	Shrub	Drip Line	0.50	0.73	0.81	3	8	14	7	Min. Per Day
14	Low	Shrub	Rotor	0.30	0.45	0.75	3	9	14	7	Min. Per Day
14	Mod	Shrub	Rotor	0.50	0.45	0.75	6	15	24	12	Min. Per Day
3	Low	Shrub	Rotary	0.30	0.61	0.75	2	7	11	5	Min. Per Day
4	Low	Tree	Bubbler	0.40	1.80	0.77	1	3	5	2	Min. Per Day
9	Mod	Tree	Bubbler	0.60	1.80	0.77	2	4	7	3	Min. Per Day
Total Valves		100	Subtotal Hour Run Times @ 7 Days Per Week				4.7	12.7	20.4	10.1	
			Number of RCV's Operating Concurrently				3	3	3	3	
			Total Hours of Run Time @ 7 Days Per Week				1.6	4.2	6.8	3.4	Hours Per Day

CONTROLLER SCHEDULING NOTE:
THESE SUGGESTED RUN TIMES ARE FOR REFERENCE ONLY. ACTUAL RUN TIMES MAY DIFFER DUE TO VARYING SITE CONDITIONS. CONTRACTOR SHALL ADJUST RUN TIMES AS REQUIRED TO PROVIDE APPROPRIATE WATER FOR EACH VALVE CIRCUIT. MULTIPLE CYCLES MAY BE REQUIRED TO MINIMIZE PONDING AND RUNOFF ONTO NON-IRRIGATED AREAS.

CONTROLLER MAXIMUM DEMAND NOTE:
CONTRACTOR SHALL SCHEDULE CONTROLLER TO RUN MULTIPLE STATIONS CONCURRENTLY, UP TO A MAXIMUM OF 80 GPM, SO AS NOT TO EXCEED IRRIGATION WATERING WINDOW. ALL OVERHEAD IRRIGATION SHALL BE PROGRAMMED TO OPERATE PRIOR TO DRIP IRRIGATION.

NOTE:
A. THE TIME PERIOD WHEN OVERHEAD IRRIGATION WILL BE SCHEDULED AND CONFIRM THAT NO OVERHEAD IRRIGATION SHALL BE USED BETWEEN 10:00 A.M. AND 6:00 P.M.
B. IRRIGATION SYSTEMS USING RECYCLED WATER SHALL BE SCHEDULED FOR USE BETWEEN THE HOURS OF 10:00 P.M. AND 6:00 A.M.
C. DRIP IRRIGATION SHALL BE SCHEDULED TO RUN AFTER ALL OVERHEAD IRRIGATION IS COMPLETE.

Irrigation Pressure Calculation

Meter No:		1
HGL:		1219 FT
Elevation of Meter:		1026 FT
Static Water Pressure PSI:		0 psi
Valve No:		45
Valve Demand		36 GPM
Maximum System Demand		80 GPM
Elevation Change P.O.C. to Highest Head:		0 FT
Losses:		
3" Service line		1.1 psi
2" RP Backflow Device		13.0 psi
2" Basket Strainer		3.5 psi
2" Master Valve		3.1 psi
2" Flow Sensor		2.2 psi
Isolation Valves		3.0 psi
1-1/2" R.C.V.		3.5 psi
1900 Feet of 3" Mainline CL 200		10.0 psi
Fitting Loss 10%		3.9 psi
Lateral Line Loss 10%		4.0 psi
Loss to Highest Head		0.0 psi
Total Losses:		47 psi
Head Operating Pressure:		40 psi
Minimum Pressure Required:		87 psi
Residual Pressure:		10 psi
PUMP REQUIRED:	YES	
Min. Pump Outlet PSI Required:	97 psi	
Minimum PSI Boost Required:	97 psi	

RGA
Office of Architectural Design
15231 Alton Parkway, Suite 100
Irvine, CA 92618
T 949-341-0920
FX 949-341-0922

CONSULTANT

RLA
8841 RESEARCH DR
SUITE 200
IRVINE • CA 92618
949.387.1323
RIDGELA.COM

PROFESSIONAL SEALS

PROJECT NAME

LBA LOGISTIC CENTER III

14800 W. SCHULTE
ROAD, TRACY, CA

LBA REALTY

3347 MICHELSON DRIVE, SUITE 200
IRVINE, CA 92612

D: 949-955-9333, C: 818-919-5336

MARK	DATE	DESCRIPTION
	06/15/20	1st COUNTY SUBMITTAL

RGA PROJECT NO:	19071.00
OWNER PROJECT NO:	00000.00
CAD FILE NAME:	--
DRAWN BY:	RLA
CHKD BY:	RLA

COPYRIGHT
RGA, OFFICE OF ARCHITECTURAL DESIGN

SHEET TITLE

IRRIGATION CALCULATIONS

SHEET: L5.2

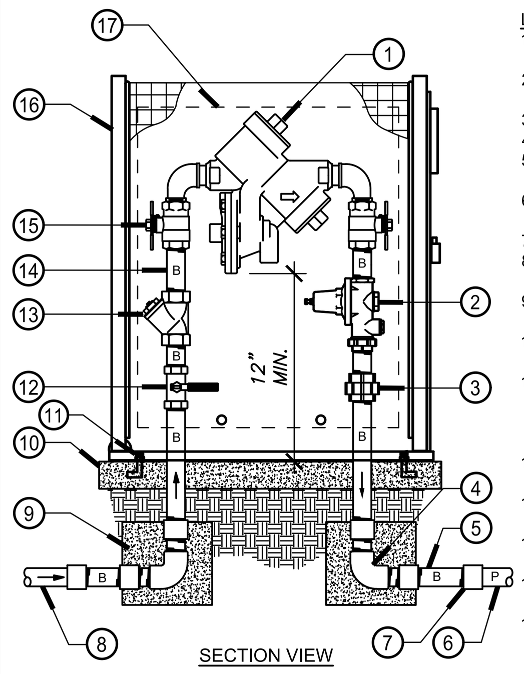

LEGEND:
1. R/P DEVICE - SEE LEGEND FOR SIZE AND TYPE.
2. PRESSURE REGULATOR - IF SPECIFIED SEE LEGEND FORSIZE AND TYPE.
3. BRASS UNION.
4. BRASS ELL (TYP).
5. SCH. "K" HARD COPPER NIPPLE - 12" MINIMUM LENGTH.
6. PVC MAINLINE TO MASTER VALVE - SIZE AND TYPE PER PLAN.
7. SCH 80 FEMALE ADAPTER.
8. SCH. "K" HARD COPPER MAINLINE FROM METER.
9. 12"x12"x12" POURED CONCRETE THRUST BLOCKS- TWO REQUIRED.
10. POURED CONCRETE BASE - SEE NOTE (A) BELOW.
11. 3/8" (L) ANCHOR BOLTS SUBMERGED IN CONCRETE MINIMUM TWO INCHES - PER MANUFACTURE SPECIFICATIONS.
12. BRASS FULL-PORT BALL VALVE, LINE SIZE.
13. WYE STRAINER - SEE LEGEND FOR TYPE.
14. BRASS RISER - LENGTH AS REQUIRED, 4 REQ.
15. BRASS BALL VALVE AS PART OF ASSEMBLY.
16. BACKFLOW DEVICE ENCLOSURE - SEE LEGEND FOR TYPE. MAXIMUM SIZE (17.75"W x 27"H x 46.5"L) MAXIMUM WT. 50 LBS.
17. SLIP-ON INSULATING / FREEZE BLANKET BACKFLOW COVER - IF SPECIFIED SEE LEGEND FOR SIZE AND TYPE.

NOTES:
A. POURED CONCRETE BASE - 6" MINIMUM THICKNESS – EXTEND 4" BEYOND OUTSIDE DIMENSIONS OF ENCLOSURE, INSTALL PER MANUFACTURE SPECIFICATIONS.
B. IF BACKFLOW ENCLOSURE IS SPECIFIED IN THE LEGEND, THE CONCRETE SLAB SHALL BE THE SIZE REQUIRED BY THE MANUFACTURER.
C. BACKFLOW PREVENTION DEVICE ASSEMBLY SHALL BE INSTALLED IN ACCORDANCE TO GOVERNING CODES AND ORDINANCE.
D. WRAP SUBSURFACE BRASS PIPING WITH 10 MILL UPC PIPE WRAP.
E. PROVIDE 6" CLEARANCE ALL AROUND ENCLOSURE. SLOPE TO DRAIN AWAY AND FINISH WITH 1/4" ROUND OVER.
F. INSTALL ENCLOSURE ACCORDING TO MANUFACTURER'S INSTRUCTIONS. PROVIDE ADEQUATE CLEARANCE FOR MAINTENANCE.

(M) BACKFLOW DEVICE — NOT TO SCALE

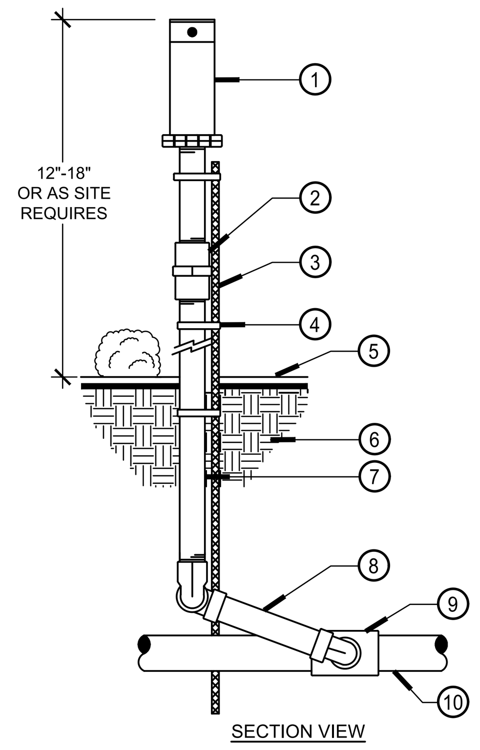

LEGEND:
1. SHRUB ADAPTER SPRAY HEAD - SEE LEGEND FOR SPECIFICATIONS.
2. SCH 40 PVC THREADED COUPLING OR SPRING-TYPE ANTI-DRAIN CHECK VALVE FOR HEADS WITH POTENTIAL OF LOW HEAD DRAINAGE.
3. RE-BAR STAKE - #4 X 30" LENGTH.
4. VANDAL-PROOF STAINLESS STEEL CLAMP - USE IN 3 PLACES.
5. FINISHED GRADE.
6. UNDISTURBED SOIL.
7. ULTRA-VIOLET RESISTANT SCH 40 PVC PIPE - LENGTH AS REQUIRED.
8. PRE-ASSEMBLED TRIPLE SWING JOINT. HUNTER SJ SERIES (OR APPROVED EQUAL). SIZE AS PER SPRINKLER OUTLET.
9. SCH 40 PVC SxSxT TEE FITTING - LATERAL SIZE x SPRINKLER INLET SIZE.
10. LATERAL LINE - SEE SPECIFICATIONS FOR TYPE AND DEPTH REQUIRED.

NOTES:
A. INSTALL SPRINKLER HEADS 12" FROM FENCES, WALLS, OR BUILDINGS.
B. DO NOT INSTALL SPRINKLER HEAD WITHIN 36" OF PAVING, CURBS, OR TURF EDGES.
C. INSTALL SPRINKLER HEADS PLUMB. ADJUST SPRAY TO COVER LANDSCAPE AREA WITHOUT OVERSPRAY ONTO PAVING, FENCES, WALLS, OR BUILDINGS.

(J) ROTOR HEAD ON RISER — NOT TO SCALE

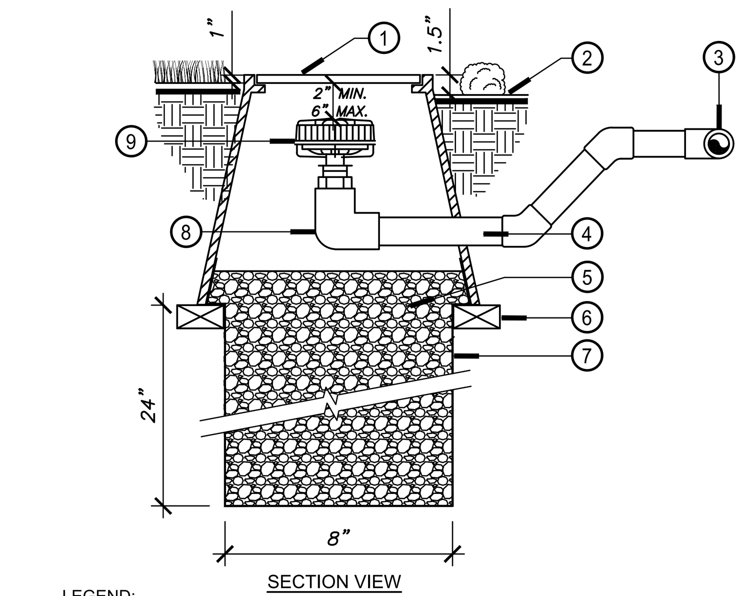

LEGEND:
1. 6" PLASTIC ROUND VALVE BOX - HEAT BRAND "FV" ONTO LID.
2. FINISHED GRADE.
3. SCH 40 PVC PIPE EXHAUST HEADER FROM DRIP TUBING.
4. PVC LATERAL (OR EXHAUST HEADER).
5. 1/2" ROUND WASHED PEA GRAVEL - 2.5 CUBIC FEET MINIMUM.
6. NOMINAL SIZE SOLID BRICK SUPPORTS (3 REQUIRED - EQUALLY SPACED).
7. LANDSCAPE FABRIC.
8. S X ½" SCH. 40 PVC 90 DEGREE ELL (SIZE AS REQUIRED).
9. AUTOMATIC DRIP FLUSH VALVE - SEE LEGEND FOR TYPE.

NOTES:
A. USE 45 DEGREE ELLS TO TRANSITION TO DRIPLINE HEADER DEPTH.
B. SET TOP OF VALVE BOX 1-1/2" ABOVE FINISHED GRADE IN GROUNDCOVER / SHRUB AREAS, AND ½" ABOVE FINISHED GRADE IN TURF AREAS.
C. USE TEFLON TAPE ON ALL THREADED FITTINGS, TYPICAL.
D. FLUSH VALVES FOR TURF AREAS SHALL BE PLACED IN ADJACENT SHRUB PLANTER, NO VALVES ARE TO BE PLACED IN TURF AREAS, VERIFY EXACT LOCATION IN FIELD.

(G) AUTOMATIC DRIP FLUSH VALVE — NOT TO SCALE

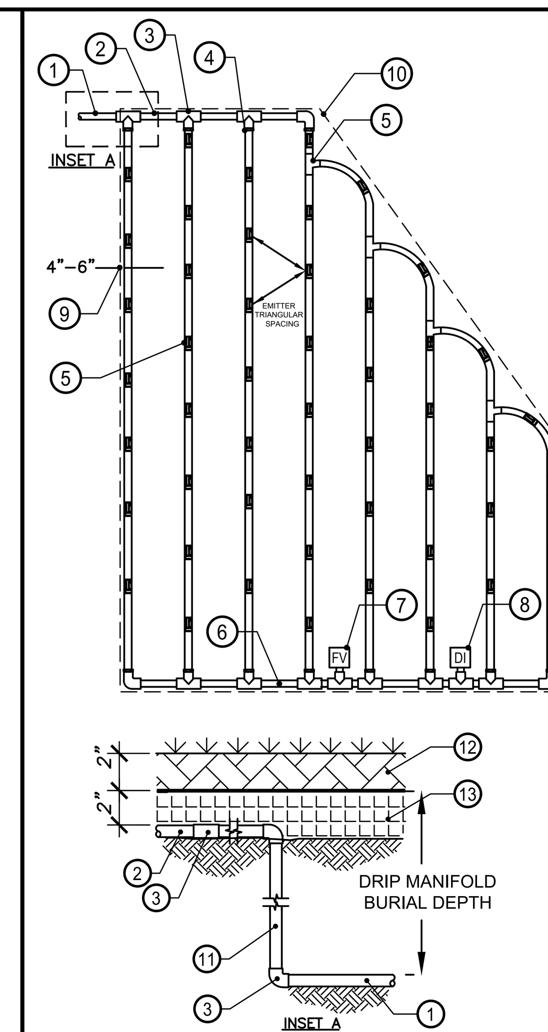

LEGEND:
1. PVC PIPE LATERAL LINE FROM DRIP ZONE KIT.
2. PVC PIPE SUPPLY HEADER.
3. SCH 40 PVC TEE SxSxT OR ELL, LINE SIZE BY ½".
4. DRIPLINE FITTING MALE ADAPTER TRANSITION TO DRIP TUBING.
5. IN-LINE DRIP TUBING WITH TRIANGULAR SPACING EMITTERS 12 INCH ON CENTER, ROW SPACING 14-16 INCHES ON CENTER FOR SHRUB AREAS AND 12 INCHES MAXIMUM FOR TURF AREAS. - SEE LEGEND FOR TYPE.
6. PVC PIPE FLUSH EXHAUST MANIFOLD.
7. FLUSH VALVE, PLUMBED TO PVC PIPE AT LOW/END OF DRIP ZONE (TYP) - SEE LEGEND FOR TYPE.
8. DRIP OPERATIONAL INDICATOR - SEE LEGEND FOR TYPE.
9. PLANTER AREA PERIMETER.
10. PERIMETER DRIPLINE PIPE TO BE INSTALLED 4"-6" FROM PERIMETER OF PLANTER AREA, MINIMUM 12" DISTANCE FROM BUILDING.
11. PVC PIPE SCH 40 RISER, LENGTH AS REQUIRED.
12. BARK MULCH - SEE PLANTING PLAN.
13. AMENDED SOIL - 2" COVER.

(D) DRIPLINE LAYOUT (TYP) — NOT TO SCALE

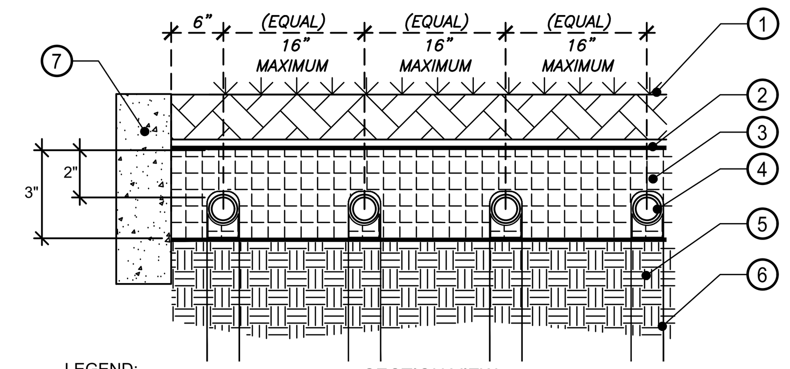

LEGEND:
1. BARK MULCH FOR SHRUB AREA PLANTING, SEE PLANTING PLAN FOR DEPTH AND TYPE.
2. FINISHED GRADE.
3. AMENDED SOIL. BRING SOIL LEVEL MINIMUM 3" BELOW FINISHED GRADE PRIOR TO DRIP TUBING INSTALLATION.
4. IN-LINE DRIP TUBING - SEE LEGEND FOR TYPE, EMITTER AND ROW SPACING.
5. AMENDED SOIL AS PER LANDSCAPE DRAWINGS.
6. 6" WIRE STAKES FIVE (5) FEET ON CENTER - SEE LEGEND FOR TYPE.
7. HARDSCAPE / CURB / PAVING.

NOTES
A. TO INSURE EVEN PARALLEL AND LEVEL TUBING ROWS IT IS RECOMMENDED THAT THE SOIL LEVEL IN THE PLANTER AREAS BE BROUGHT TO MINIMUM 3"- 4" BELOW FINISHED GRADE AND PROPERLY COMPACTED AS PER THE LANDSCAPED DRAWINGS PRIOR TO THE INSTALLATION OF THE TUBING.
B. INSTALL TUBING ROWS A MAXIMUM 16" ROW SPACING. SECURE TO GRADE USING 9" GALVANIZED WIRE HOOP STAKES AT MAXIMUM 4 FEET ON CENTER SPACING.
C. BACKFILL FINAL 2" - 3" OF SOIL AFTER INSTALLATION OF TUBING.
D. DRIP TUBING SHALL BE INSTALLED WITH EMITTERS TRIANGULAR SPACED.
E. INSTALL PERIMETER TUBING MAXIMUM 6" FROM PERIMETER EDGE FOR GROUNDCOVER AREAS OR AT FIRST LINE OF SHRUBS.
F. INSTALL PARALLEL TO SLOPE AT ALL TIMES.
G. CONTRACTOR SHALL DETERMINE MINIMUM ROW SPACING IN THE FIELD AFTER REVIEW OF PLANT SPACING FOR EACH PLANTER.
H. EACH AND EVERY SHRUB SHALL RECEIVE WATER FROM A MINIMUM OF TWO INLINE EMITTERS.
I. AREAS OF TIGHTLY SPACED GROUNDCOVER WILL REQUIRE 12" OR CLOSER ROW SPACING.
J. FOR ANY 'SINGLE' OR' DOUBLE' ROW TYPE PLANTINGS, INSTALL DRIP TUBING ON BOTH SIDES OF THE SHRUB ROW TO IRRIGATE SHRUBS ON EITHER SIDE.
K. DUE TO SOIL STRATA DIFFERENCES AND POSSIBLE COMPACTION CONTRACTOR SHALL FIELD VERIFY PRIOR TO STARTING WORK AND BEFORE BACKFILLING THAT THE FINAL LAYOUT AND ROW SPACING WILL PROVIDE ADEQUATE WATER TO ALL PLANTS.

(A) DRIPLINE LAYOUT (TYP) — NOT TO SCALE

STRONGBOX
SMOOTH TOUCH LOW PROFILE

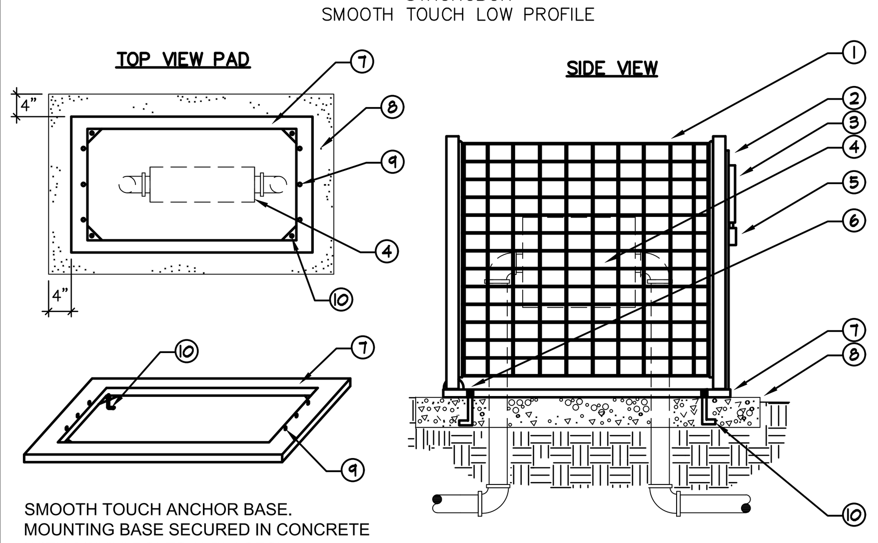

SMOOTH TOUCH ANCHOR BASE.
MOUNTING BASE SECURED IN CONCRETE WITH 3/8" "L" BOLTS (4 PLACES).
EXISTING CONCRETE CORNERS WILL NEED 3/8"x 3" REDHEAD ANCHORS.

LEGEND
1. STRONGBOX SMOOTH TOUCH BACKFLOW CAGE AS SPECIFIED PER SIZE.
2. ENCLOSURE LOCKING SWING DOOR (DOOR MOUNTED TO ANCHOR BASE)
3. PADLOCK PROTECTIVE COVER.
4. BACKFLOW PREVENTER.
5. PADLOCK.
6. ENCLOSURE SWIVEL POINT ATTACHED TO MOUNTING BASE. ENCLOSURE SECURED TO BASE (6 PLACES)
7. ANCHOR BASE MOUNT.
8. POURED CONCRETE BASE, 6" MINIMUM THICKNESS. EXTEND 4" BEYOND OUTSIDE DIMENSIONS OF ENCLOSURE.
9. ENCLOSURE MOUNTING BASE STUDS 3/8" X 3/4".
10. 3/8" "L" ANCHOR BOLTS SUBMERGED IN CONCRETE A MINIMUM TWO INCHES.

(N) BACKFLOW ENCLOSURE — NOT TO SCALE

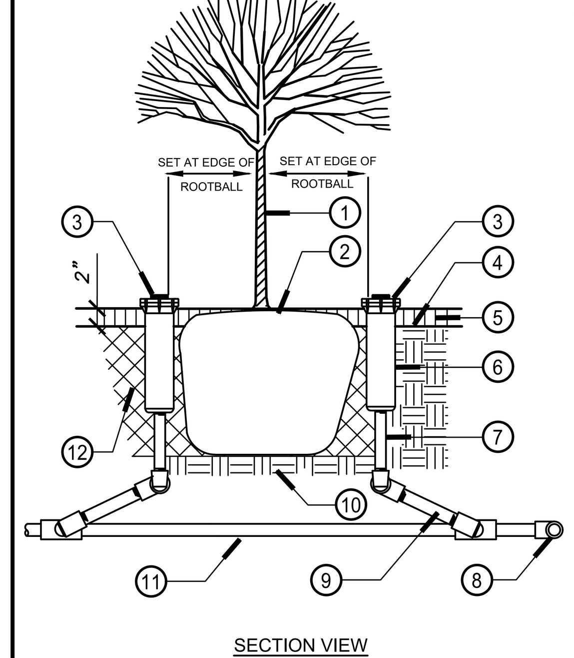

LEGEND:
1. TREE TRUNK.
2. TREE ROOTBALL.
3. IRRIGATION POP-UP HEAD WITH BUBBLER NOZZLE - SEE LEGEND FOR TYPE.
4. FINISHED GRADE.
5. 2" LAYER OF MULCH, PER PLANTING PLANS.
6. IRRIGATION POP-UP HEAD - SEE LEGEND FOR TYPE.
7. SCH 80 PVC THREADED RISER - LENGTH AS REQUIRED.
8. PVC LATERAL, PER PLAN.
9. PRE-ASSEMBLED TRIPLE SWING JOINT: HUNTER SJ SERIES (OR APPROVED EQUAL). LAY LENGTH TO BE 6" MINIMUM, SIZE AS PER SPRINKLER OUTLET.
10. SET ROOTBALL ON UNDISTURBED NATIVE SOIL.
11. PVC SCH 40 TEE -SST OR ELL -ST ON PVC LATERAL.
12. TREE PIT, PER PLANTING DETAILS.

NOTE:
A. INSTALL TWO BUBBLERS PER TREE.
B. PERCOLATION TEST TO BE DONE FOR DEEP WATERING, AND RESULTS RETURNED TO LANDSCAPE ARCHITECT.
C. PLACE BUBBLERS AT EDGE OF ROOTBALL ON OPPOSITE SIDES OF TREE. ADJUST PER ROOTBALL SIZE, TYPICAL.
D. USE TEFLON TAPE ON ALL THREADED FITTINGS, TYPICAL.

(K) POP-UP TREE BUBBLER — NOT TO SCALE

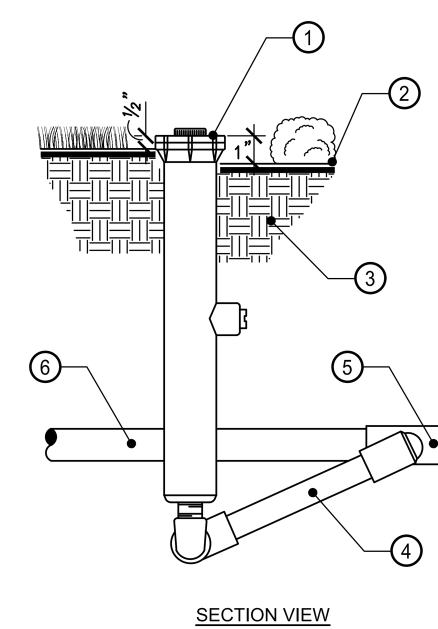

LEGEND:
1. POP-UP SPRAY HEAD - SEE LEGEND FOR TYPE.
2. FINISH GRADE. INSTALL HEAD ½" ABOVE GRADE IN TURF AREAS AND 1" ABOVE GRADE IN SHRUB AREAS.
3. APPROVED BACKFILL.
4. MANUFACTURED SWING JOINT - HUNTER MODEL #SJ-512 OR RAIN BIRD MODEL #SA-125050 1/2" SWING JOINT ASSEMBLY.
5. SCH 40 PVC TEE-SxSxT OR ELL-SxT.
6. PVC LATERAL LINE PIPE, WITH WORDS "RECYCLED WATER-DO NOT DRINK" - SEE LEGEND FOR TYPE, SEE PLANS FOR SIZE.

NOTES:
A. INSTALLATION TO BE COMPLETED IN ACCORDANCE WITH MANUFACTURER'S SPECIFICATIONS.
B. INSTALL SPRINKLER HEADS 24" FROM ANY NON-PERMEABLE SURFACE.
C. INSTALL SPRINKLER HEADS MINIMUM 12" FROM ALL BUILDINGS AND WALLS.
D. INSTALL SPRINKLER HEADS PLUMB.
E. ADJUST SPRAY OR NOZZLE STREAM TO COVER LANDSCAPE AREA WITHOUT OVERSPRAY ONTO PAVING, FENCES, WALLS OR BUILDINGS.
F. USE TEFLON TAPE ON THREADED FITTINGS, TYPICAL. (NO LIQUID TEFLON)
G. DO NOT SCALE DRAWINGS.
H. DO NOT USE SIDE INLET.

(H) POP-UP SPRINKLER — NOT TO SCALE

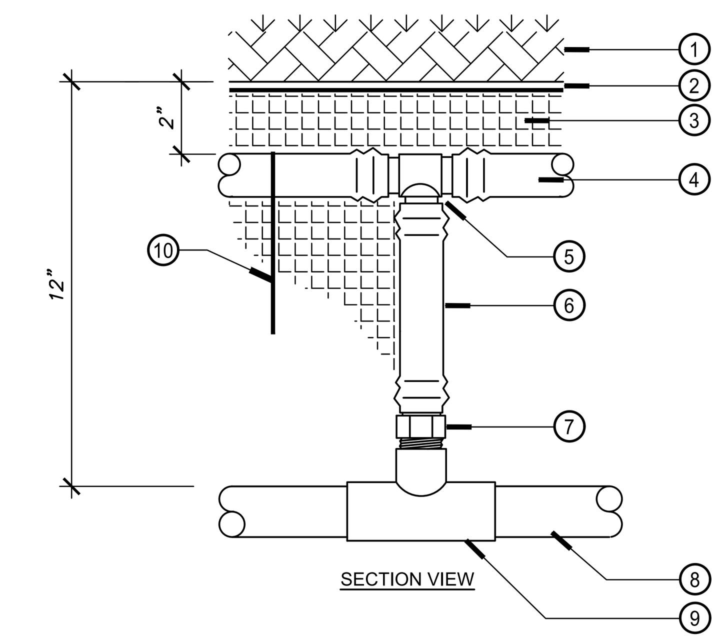

LEGEND:
1. BARK MULCH FOR SHRUB AREA PLANTING, SEE PLANTING PLAN FOR DEPTH AND TYPE.
2. FINISHED GRADE.
3. AMENDED SOIL.
4. DRIP TUBING - SEE LEGEND FOR TYPE.
5. DRIPLINE BARB INSERT FITTINGS - SEE LEGEND FOR TYPE.
6. BLANK POLY TUBING - LENGTH AS REQUIRED.
7. DRIP TUBING MALE ADAPTER.
8. PVC LATERAL LINE PIPING INLET OR EXHAUST MANIFOLD.
9. SCH 40 PVC TEE SxSxT, LINE SIZE BY ½".
10. 6" WIRE STAKES FIVE (5) FEET ON CENTER - SEE LEGEND FOR TYPE.

(E) DRIPLINE CONNECTION — NOT TO SCALE

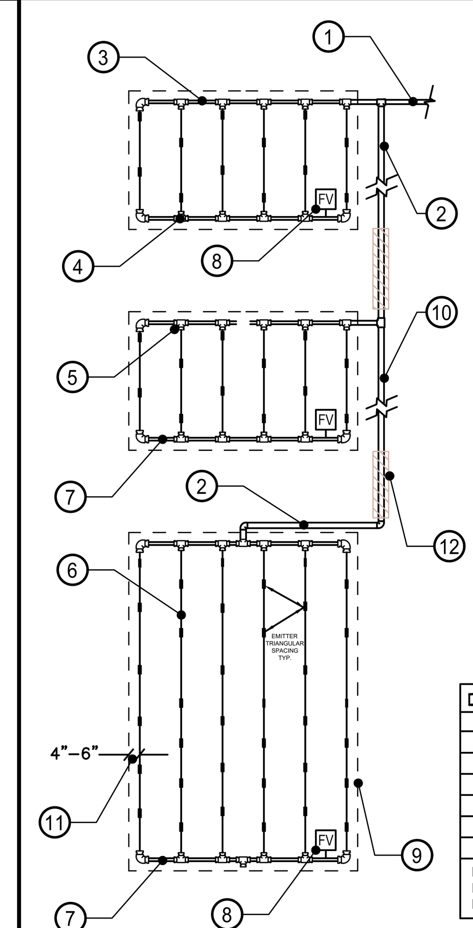

LEGEND:
1. PVC PIPE LATERAL LINE FROM DRIP ZONE KIT.
2. PVC PIPE LATERAL SUPPLY HEADER.
3. PVC PIPE INLET HEADER.
4. SCH 40 PVC TEE SxSxT, LINE SIZE BY ½".
5. DRIPLINE FITTING MALE ADAPTER TRANSITION TO DRIP TUBING.
6. IN-LINE DRIP TUBING WITH EMITTERS 12 INCH ON CENTER, MAXIMUM ROW SPACING 14"-16" ON CENTER IN SHRUB AREAS AND 10"-12" IN TURF - SEE LEGEND FOR TYPE.
7. PVC PIPE FLUSH EXHAUST MANIFOLD.
8. FLUSH VALVE, PLUMBED TO EXHAUST HEADER PVC PIPE AT LOW / END OF DRIP ZONE, TYP. - SEE LEGEND FOR TYPE.
9. PLANTER AREA PERIMETER.
10. PERIMETER DRIPLINE LATERALS 18" FROM EDGE. REFER TO PIPE INSTALLATION DETAIL FOR DEPTH, SEE PLAN FOR SIZE.
11. PERIMETER DRIPLINE PIPE TO BE INSTALLED 4"-6" FROM PERIMETER OF PLANTER AREA, MINIMUM 12" DISTANCE FROM BUILDING.
12. INSTALL PVC LATERAL LINE WITHIN SLEEVES BETWEEN ALL PLANTERS - SEE LEGEND FOR TYPE.

DRIPLINE HEADER/FOOTER PIPE SIZING CHART

HEADER/FOOTER SHALL BE MINIMUM SIZE OF 3/4 INCH.

FLOW RANGE	MINIMUM SIZE OF HEADER/FOOTER
0 THROUGH 5 GPM	MINIMUM SIZE SHALL BE 3/4 INCH
6 THROUGH 10 GPM	MINIMUM SIZE SHALL BE 1 INCH
11 THROUGH 15 GPM	MINIMUM SIZE SHALL BE 1-1/4 INCH
16 THROUGH 25 GPM	MINIMUM SIZE SHALL BE 1-1/2 INCH
26 THROUGH 50 GPM	MINIMUM SIZE SHALL BE 2 INCH

NOTE: CONTRACTOR SHALL SIZE ALL DRIPLINE EXHAUST HEADERS PER PIPE SIZING CHART, IN NO INSTANCE SHALL PIPE SIZE EXCEED DESIGNATED GPM RANGE.

NOTES:
A. INSTALLATION TO BE COMPLETED IN ACCORDANCE WITH MANUFACTURERS SPECIFICATIONS.
B. DRIP EMITTER LAYOUT SHALL BE TRIANGULAR SPACED INSTALLED WITH 9" WIRE STAKES FIVE (5) FEET ON CENTER.

(B) ISLAND DRIPLINE LAYOUT — NOT TO SCALE

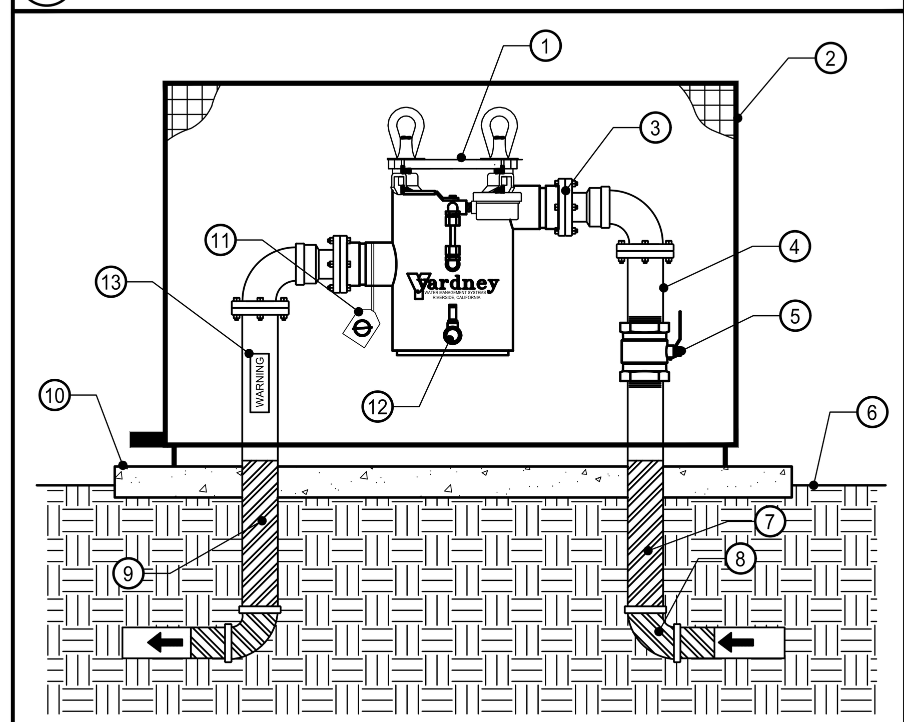

LEGEND:
1. BASKET STRAINER, REFER TO LEGEND FOR TYPE.
2. LOCKABLE ENCLOSURE, REFER TO LEGEND FOR TYPE.
3. FLANGE, (SIZE VARIES)
4. BRASS NIPPLES (LENGTH VARIES, 3 REQUIRED, LINE SIZE)
5. BRASS / BRONZE BALL VALVE.
6. FINISH GRADE.
7. BRASS / COPPER MAINLINE, DOUBLE-WRAPPED WITH PVC PIPE WRAP FROM WATER SOURCE.
8. BRASS ELBOWS (TxT, 2 REQUIRED, LINE SIZE)
9. BRASS / COPPER MAINLINE, DOUBLE-WRAPPED WITH PVC PIPE WRAP TO MASTER VALVE AND FLOW SENSOR.
10. 6" THICK CONCRETE PAD.
11. "PURPLE" PLASTIC LABEL ATTACHED WITH NYLON TIE. LABEL TO READ "RECYCLED WATER-DO NOT DRINK" IN ENGLISH AND SPANISH.
12. 1/2" MPT DRAIN VALVE.
13. "PURPLE" RECYCLED WATER WARNING LABEL, CHRISTY'S RISER MARKER MODEL #1500.

(O) BASKET STRAINER — NOT TO SCALE

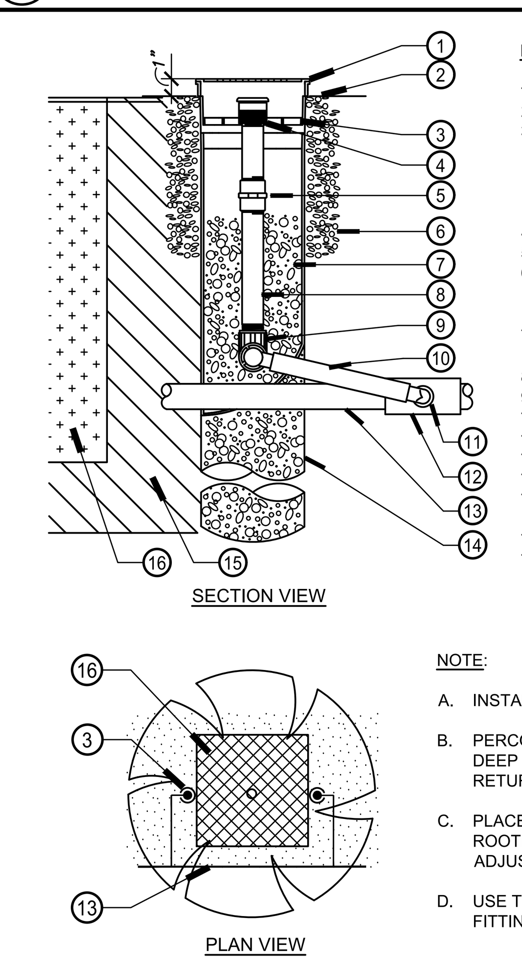

LEGEND:
1. 4" GRATE (INCLUDED).
2. FINISH GRADE.
3. ROOT WATERING SYSTEM: RAIN BIRD RWS-BCG (INCLUDES, RISER, CHECK VALVE, GRATE, SWING ASSEMBLY, ½" MALE NPT INLET, AND BASKET CANISTER.
4. BUBBLER NOZZLE.
5. CHECK VALVE (INCLUDED).
6. 1/2" ROUND PEA GRAVEL AND SAND SOCK (RWS-SOCK) FOR SANDY SOILS.
7. FILL WITH ¾" GRAVEL TO BOTTOM OF CHECK VALVE.
8. ½" PVC SCH 80 NIPPLE (INCLUDED).
9. ½" 90 DEGREE ELBOW (INCLUDED).
10. 12" SWING ASSEMBLY (INCLUDED).
11. ½" MALE NPT INLET (INCLUDED).
12. PVC SCH 40 TEE OR ELL.
13. LATERAL PIPE.
14. 4" BASKET WEAVE CANISTER (INCLUDED).
15. AMENDED BACKFILL.
16. ROOTBALL OF TREE.

NOTE:
A. INSTALL TWO BUBBLERS PER TREE.
B. PERCOLATION TEST TO BE DONE FOR DEEP WATERING, AND RESULTS RETURNED TO LANDSCAPE ARCHITECT.
C. PLACE BUBBLERS AT EDGE OF ROOTBALL ON OPPOSITE SIDES OF TREE. ADJUST PER ROOTBALL SIZE, TYPICAL.
D. USE TEFLON TAPE ON ALL THREADED FITTINGS, TYPICAL.

(L) TREE BUBBLER DEEP ROOT WATER SYSTEM — NOT TO SCALE

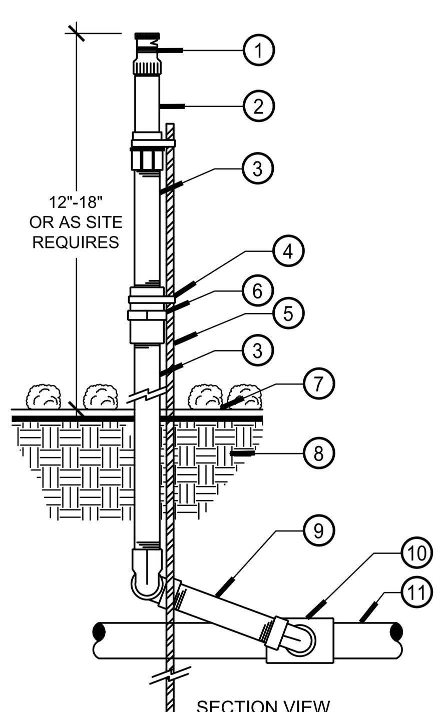

LEGEND:
1. SPRINKLER NOZZLE - SEE LEGEND FOR SPECIFICATIONS.
2. PRESSURE REGULATING SHRUB ADAPTER - SEE LEGEND FOR SPECIFICATIONS.
3. ULTRA-VIOLET RESISTANT 1/2" SCH 40 PVC PIPE MPT RISER - LENGTHS AS REQUIRED.
4. VANDAL-PROOF STAINLESS STEEL CLAMP - USE IN 2 PLACES.
5. #4 RE-BAR STAKE - 30" LENGTH.
6. SCH 40 PVC THREADED COUPLING OR SPRING-TYPE ANTI-DRAIN CHECK VALVE FOR HEADS WITH POTENTIAL OF LOW HEAD DRAINAGE.
7. FINISHED GRADE.
8. UNDISTURBED SOIL.
9. MANUFACTURED SWING JOINT - HUNTER MODEL #SJ-512 OR RAIN BIRD MODEL #SA-125050 1/2" SWING JOINT ASSEMBLY.
10. SCH 40 PVC SxSxT TEE FITTING - LATERAL X SPRINKLER INLET SIZE.
11. LATERAL LINE - SEE SPECIFICATIONS FOR TYPE AND DEPTH REQUIRED.

NOTES:
A. INSTALL SPRINKLER HEADS 12" FROM FENCES, WALLS, OR BUILDINGS.
B. DO NOT INSTALL SPRINKLER HEAD WITHIN 72" OF PAVING, CURBS, OR TURF EDGES.
C. INSTALL SPRINKLER HEADS PLUMB. ADJUST SPRAY TO COVER LANDSCAPE AREA WITHOUT OVERSPRAY ONTO PAVING, FENCES, WALLS, OR BUILDINGS.
D. USE TEFLON TAPE ON ALL THREADED FITTINGS, TYPICAL.
E. ABSOLUTELY NO LOW HEAD DRAINAGE ALLOWED.

(I) SPRAY HEAD ON RISER — NOT TO SCALE

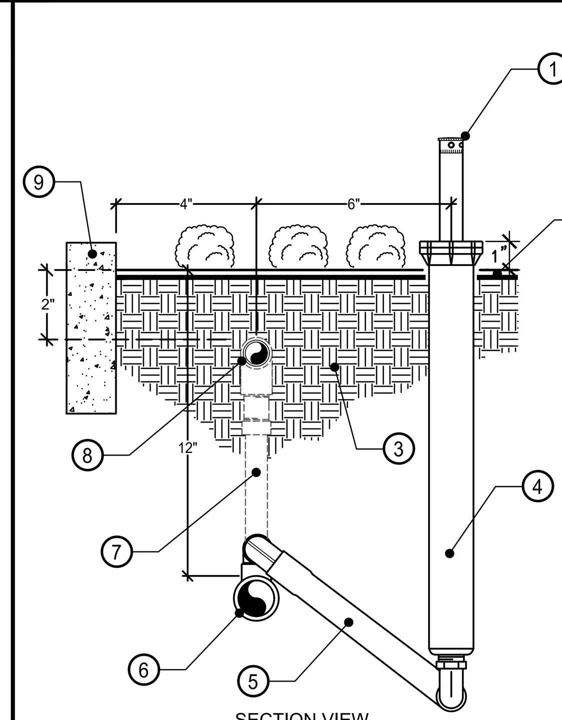

LEGEND:
1. POP-UP DRIP INDICATOR HEAD, WITH DRIP FLUSH NOZZLE, - SEE LEGEND FOR TYPE.
2. FINISH GRADE. INSTALL POP-UP DRIP INDICATOR ½" ABOVE GRADE IN TURF DRIP AREAS AND 1" ABOVE GRADE IN SHRUB DRIP AREAS.
3. APPROVED AMENDED BACKFILL.
4. POP-UP DRIP INDICATOR WITH FLUSH NOZZLE - SEE LEGEND FOR TYPE.
5. MANUFACTURED SWING JOINT - HUNTER MODEL #SJ-512 OR RAIN BIRD MODEL #SA-125050 1/2" SWING JOINT ASSEMBLY.
6. SCH 40 PVC PIPE END FLUSH EXHAUST HEADER FROM DRIP SYSTEM, MINIMUM SIZE 1-1/4".
7. DRIP ASSEMBLY CONNECTION.
8. SUB-SURFACE IN-LINE DRIP TUBING - SEE LEGEND FOR TYPE.
9. HARDSCAPE / CURB / PAVING

NOTES:
A. AFTER COMPLETE SYSTEM FLUSH, INSTALL DRIP INDICATOR NOZZLE AND ADJUST TO FULLY CLOSED POSITION.
B. FOR POTABLE WATER INSTALL "ORANGE" COLORED FLUSH NOZZLE. FOR RECYCLED WATER INSTALL "PURPLE" COLORED FLUSH NOZZLE.
C. INSTALL POP-UP INDICATOR HEAD 10" FROM PERIMETER OF PLANTER / HARDSCAPE.
D. DISCHARGE EXHAUST HEADER SHALL BE INSTALLED 12" BELOW FINISHED SOIL GRADE, TYPICAL.
E. INSTALL MINIMUM ONE(1) DRIP INDICATOR / FLUSH ASSEMBLY PER DRIP ZONE.
E. USE TEFLON TAPE ON THREADED FITTINGS, TYPICAL. (NO LIQUID TEFLON)

NOT TO SCALE

(F) DRIP COMBINATION FLUSH VALVE / DRIP INDICATOR POP-UP HEAD

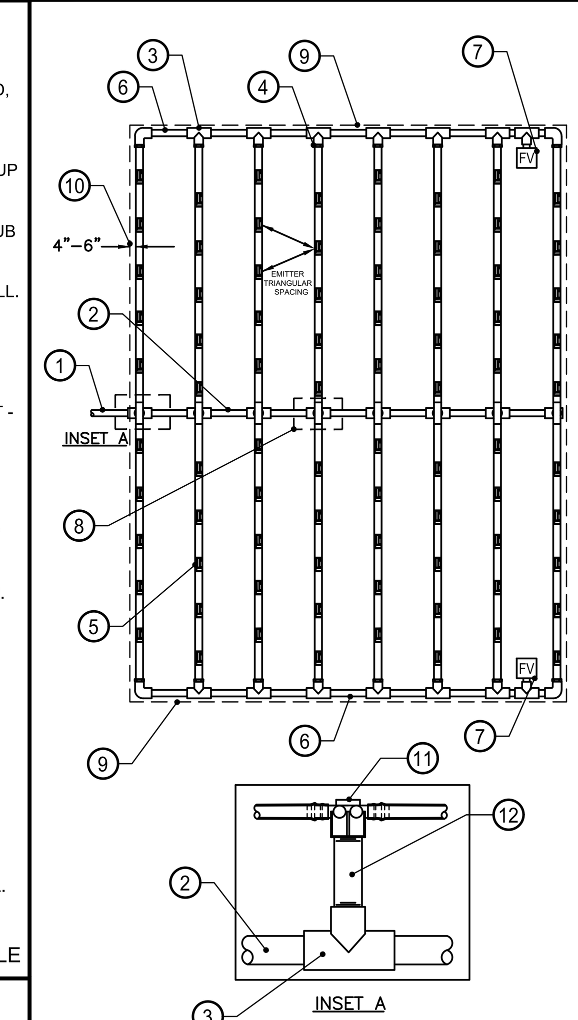

LEGEND:
1. PVC PIPE LATERAL LINE FROM DRIP ZONE VALVE KIT.
2. PVC PIPE SUPPLY MANIFOLD - SEE PLAN FOR SIZE.
3. SCH 40 PVC TEE SxSxT OR ELL, LINE SIZE BY ½".
4. DRIPLINE FITTING MALE ADAPTER TRANSITION TO DRIP TUBING.
5. IN-LINE DRIP TUBING WITH EMITTERS 12 INCH ON CENTER, MAXIMUM ROW SPACING 14"-16" ON CENTER FOR SHRUB AREAS AND 10"-12" FOR TURF - SEE LEGEND FOR TYPE. EMITTERS TO BE TRIANGULAR SPACING. INSTALL WITH 9" GALVANIZED STEEL WIRE STAKES FIVE (5) FEET ON CENTER.
6. PVC PIPE FLUSH EXHAUST MANIFOLD.
7. FLUSH VALVE, PLUMBED TO EXHAUST HEADER PVC PIPE AT LOW / END OF DRIP ZONE, TYP. - SEE LEGEND FOR TYPE.
8. CONNECTION FROM SUPPLY MANIFOLD TO DRIPLINE (TYPICAL)- SEE INSET "A"
9. PLANTER AREA PERIMETER.
10. PERIMETER DRIPLINE PIPE TO BE INSTALLED 4"-6" FROM PERIMETER OF PLANTER AREA, AND MINIMUM 12" CLEARANCE FROM BUILDING.
11. BARB X FEMALE FITTING (TYPICAL) , SEE LEGEND FOR TYPE. INSTALL STAINLESS STEEL CLAMPS ON FITTINGS FOR ANY SYSTEM THAT EXCEEDS 50 PSI.
12. ¾" PVC THREADED NIPPLE, LENGTH AS REQUIRED.

(C) DRIPLINE LAYOUT (TYP) — NOT TO SCALE

RGA
Office of Architectural Design
15231 Alton Parkway, Suite 100
Irvine, CA 92618
T 949-341-0920
FX 949-341-0922

CONSULTANT

RLA
8841 RESEARCH DR
SUITE 200
IRVINE • CA 92618
949.387.1323
RIDGELA.COM

PROFESSIONAL SEALS

REGISTERED LANDSCAPE ARCHITECT
JAMES J. RIDGE
LIC. #2809
(Signature) 6/15/20
(Date) 05/31/21
(Exp. Date)
STATE OF CALIFORNIA

PROJECT NAME

LBA LOGISTIC CENTER III
14800 W. SCHULTE ROAD, TRACY, CA

LBA REALTY

LBA REALTY
3347 MICHELSON DRIVE, SUITE 200
IRVINE, CA 92612
D: 949-955-9333, C: 818-919-5336

MARK	DATE	DESCRIPTION
	06/15/20	1st COUNTY SUBMITTAL

RGA PROJECT NO:	19071.00
OWNER PROJECT NO:	00000.00
CAD FILE NAME:	--
DRAWN BY:	RLA
CHK'D BY:	RLA

COPYRIGHT
RGA, OFFICE OF ARCHITECTURAL DESIGN

SHEET TITLE
IRRIGATION DETAILS

SHEET: L6.1

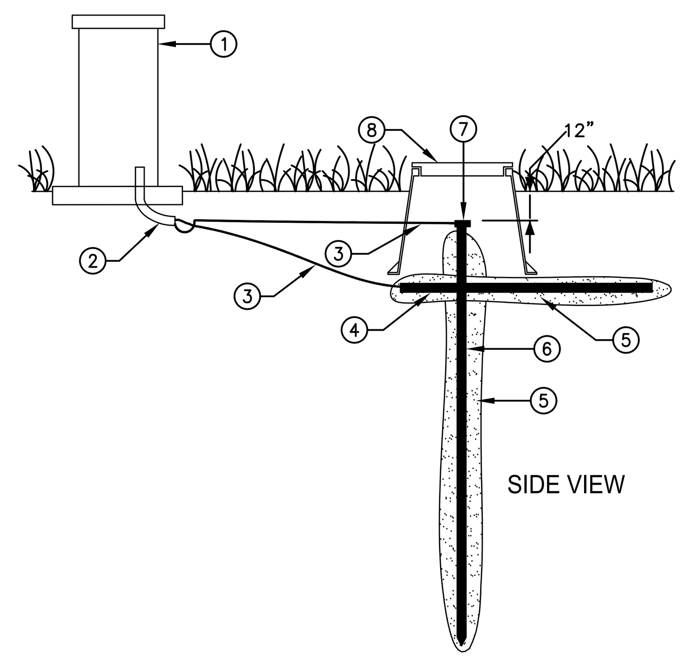

LEGEND
1. CONTROLLER ASSEMBLY PEDESTAL. REFER TO LEGEND FOR SPECIFICATION.
2. PVC ELECTRICAL SWEEP ELL (1-½" OR LARGER)
3. #6 AWG SOLID BARE COPPER WIRE.
4. U.L. APPROVED 4"x96" COPPER GROUND PLATE.
5. GROUNDING ENHANCEMENT EARTH CONTACT MATERIAL. SEE NATIONAL ELECTRIC CODE FOR SPECIFICATION.
6. 5/8"x8' COPPER CLAD GROUND ROD, U.L. APPROVED.
7. CADWELD 'ONE-SHOT' CONNECTION.
8. "BLACK" IN COLOR PLASTIC 10" ROUND SPECIFICATION GRADE VALVE BOX.

NOTE:
A. INSTALL BLACK 10" ROUND SPECIFICATION GRADE VALVE BOX OVER ROD WITH TOP OF GROUND ROD EXPOSED WITH CADWELD 'ONE-SHOT' CONNECTION

BB CONTROLLER GROUNDING
NOT TO SCALE

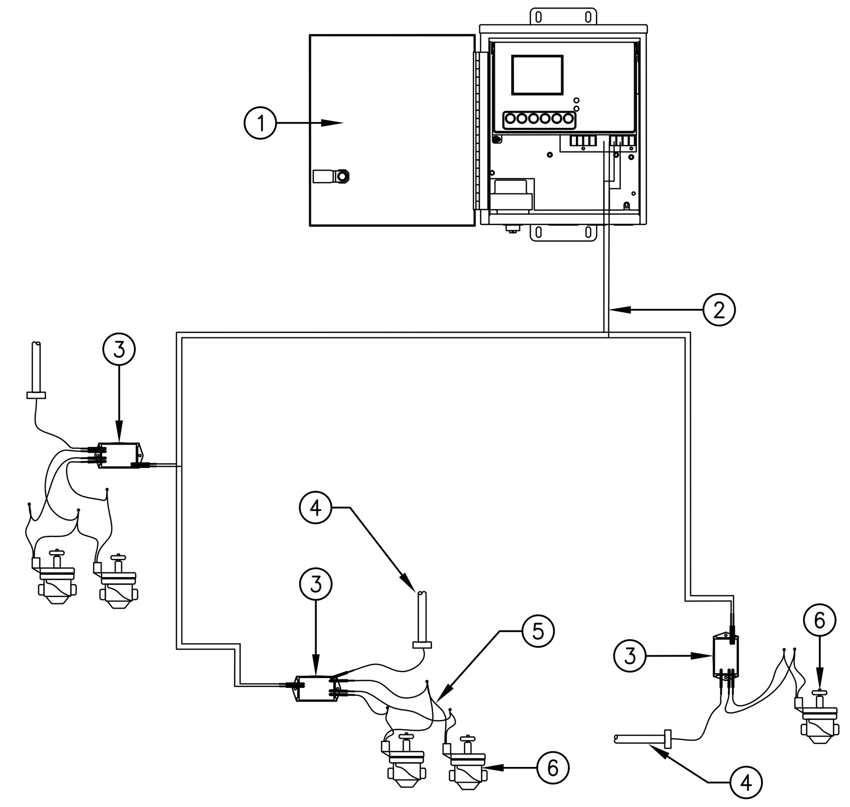

LEGEND
1. CONTROLLER. REFER TO LEGEND FOR SPECIFICATION.
2. 2-WIRE CABLE (PATH) WITHIN 1-1/4" CONDUIT.
3. 2-VALVE DECODER WITH LINE SURGE PROTECTION. INSTALL GROUNDING ROD @ 300 FOOT MAXIMUM INTERVALS ALONG 2-WIRE PATH AND AT END OF EVERY MAINLINE/WIRE RUN.
4. GROUND ROD. MIN. 10 OHMS RESISTANCE REQUIRED.
5. DECODER-TO-VALVE WIRE, SHOWN AS GENERIC/ DIAGRAMMATICAL ONLY.
6. ZONE VALVE (TYP.)

NOT TO SCALE

Y GENERIC TWO-WIRE PATH LAYOUT

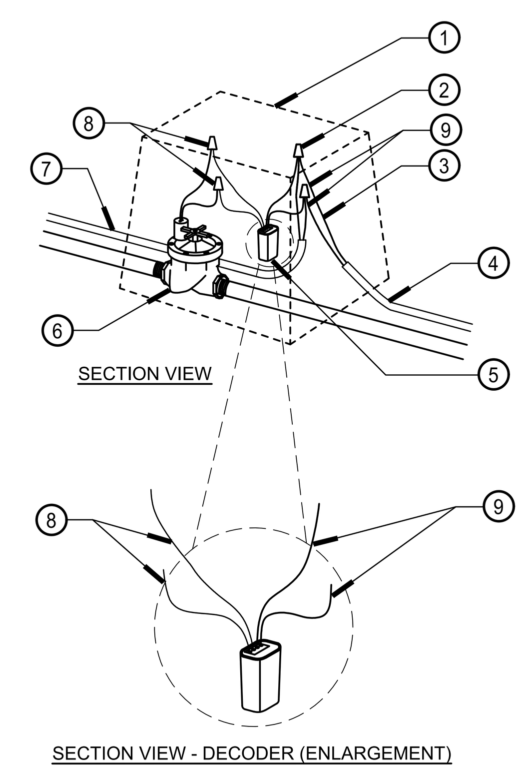

LEGEND:
1. PLASTIC RECTANGULAR VALVE BOXVALVE BOX.
2. CONTROL WIRES WITH WATER PROOF WIRE CONNECTORS, SEE LEGEND FOR TYPE. PROVIDE MINIMUM 24" COIL OF WIRE AT VALVE.
3. STRIP BACK 6" OF OUTER WIRE JACKET TO EXPOSE CONDUCTORS FOR TESTING WITH CLAMP METER.
4. TWO-WIRE PATH FROM CONTROLLER OR PREVIOUS VALVE (#14/2 AWG). INSTALLED WITHIN 1-1/4" PVC ELECTRICAL CONDUIT WITH SWEEP ELL. SEAL CONDUIT ENDS WITH EXPANDING SPRAY FOAM SEALANT.
5. 2-WIRE STATION DECODER. LABEL DECODER WITH STATION NUMBER
6. CONTROL VALVE (24 VAC). SEE LEGEND FOR TYPE, SEE PLAN FOR SIZE.
7. TWO-WIRE PATH TO NEXT VALVE (#14/2 AWG). INSTALLED WITHIN 1-1/4" PVC ELECTRICAL CONDUIT WITH SWEEP ELL.
8. WHITE WIRES TO VALVE SOLENOID.
9. BLUE WIRES CONNECT TO TWO-WIRE PATH.

V DECODER WIRING (TYPICAL)
NOT TO SCALE

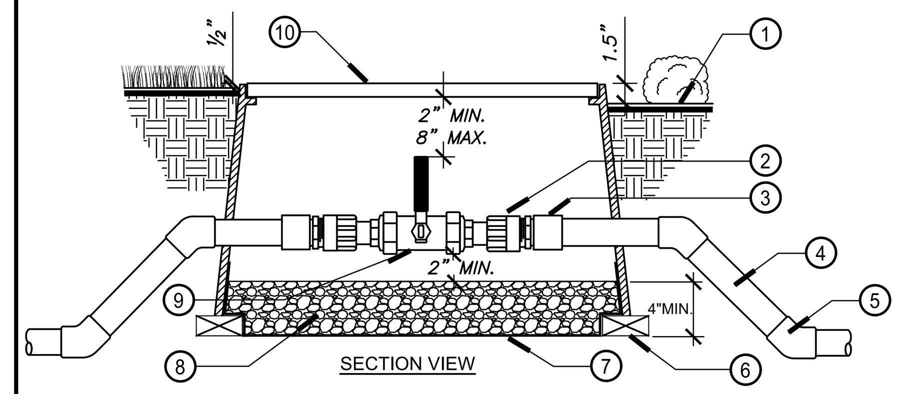

LEGEND:
1. FINISHED GRADE.
2. DURA MANIFOLD SYSTEM ADAPTER SWIVEL COUPLING (SWIVEL x O-RING MIPT), TWO REQUIRED, SIZE PER VALVE.
3. SCH 80 PVC REDUCER BUSHING, SxT, SIZE AS REQUIRED (QTY. 2 REQUIRED).
4. PVC MAINLINE - DEPTH PER SPECS.
5. 45 DEGREE ELBOW, SCH 80 FITTINGS SHALL BE USED TO RAISE MAINLINE FOR BALL VALVE WITHIN 12" OF FINISHED GRADE. (QTY. 4 REQUIRED)
6. NOMINAL SIZE SOLID BRICK (QTY. 4 REQUIRED - ONE AT EACH CORNER OF VALVE BOX).
7. LANDSCAPE FABRIC.
8. 1/2" ROUND WASHED PEA GRAVEL - MINIMUM 4" DEPTH WITH 2" MINIMUM CLEARANCE.
9. BALL VALVE - SEE LEGEND FOR TYPE. INSTALL SHUTOFF HANDLE PERPENDICULAR TO BOX LID WITH 2" MINIMUM, 8" MAXIMUM, CLEARANCE.
10. PLASTIC RECTANGULAR VALVE BOX WITH LOCKING COVER, USE STAINLESS BOLT, NUT, AND WASHER. HEAT BRAND "BV" ONTO LID MARKED FOR "RECYCLED WATER".

NOTES:
A. SCH 80, 45 DEGREE ELBOW FITTINGS, SHALL BE USED TO RAISE MAINLINE WITHIN 12" OF FINISHED GRADE. (FOUR REQUIRED)
B. PLACE VALVE BOX IN GROUNDCOVER AND SHRUB AREAS WHENEVER POSSIBLE.
C. VALVE BOX TO BE INSTALLED AS TO ALLOW FOR PROPER OPERATION OF BALL VALVE. INSTALL AT RIGHT ANGLE TO HARDSCAPE EDGE - INSTALL VALVE CENTERED IN BOX.
D. BOLTDOWN VALVE BOX COVER WITH STAINLESS STEEL BOLT AND WASHER.
E. ALL MAINLINE AND VALVE FITTINGS SHALL BE SCHEDULE 80 FITTINGS.

S BALL VALVE
NOT TO SCALE

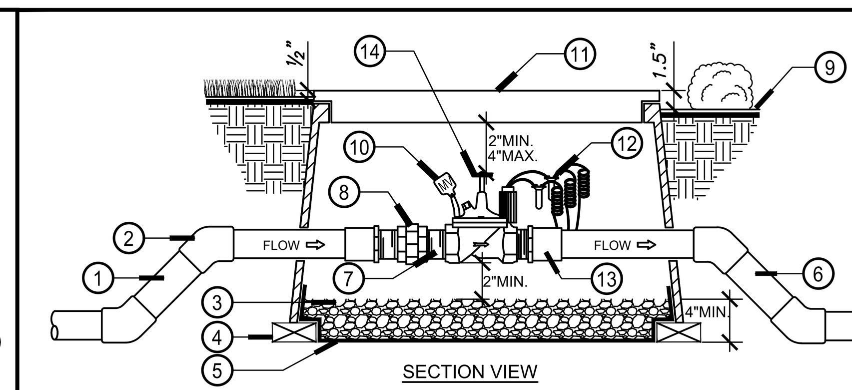

LEGEND:
1. PVC MAINLINE FROM BACKFLOW DEVICE. SEE LEGEND FOR TYPE, DEPTH PER SPECIFICATIONS.
2. PVC SCH 80, 45 DEGREE ELL - TYP. (4 REQ.).
3. 1/2" ROUND WASHED PEA GRAVEL - MINIMUM 4" DEPTH.
4. NOMINAL SIZE SOLID BRICK (4 REQUIRED - ONE AT EACH CORNER OF VALVE BOX).
5. LANDSCAPE FABRIC.
6. PVC MAINLINE TO FLOW SENSOR. SEE SPECIFICATIONS AND TRENCHING DETAIL FOR MAINLINE DEPTH.
7. SCH 80 PVC NIPPLE - LENGTH AS REQUIRED (3 REQ.)
8. PVC SCH 80 UNION (VALVE SIZE) WITH REDUCING BUSH IF REQUIRED.
9. FINISHED GRADE. SET TOP OF VALVE BOX ½" ABOVE FINISHED GRADE IN TURF AREAS, AND 1-1/2" IN SHRUB / GROUND COVER AREAS.
10. CHRISTY'S VALVE STATION # I.D. TAG ATTACHED TO VALVE BONNET BOLT.
11. PLASTIC RECTANGULAR VALVE BOX WITH LOCKING COVER, USE STAINLESS BOLT, NUT, AND WASHER. HEAT BRAND "MV" ONTO LID.
12. EPOXY-FILLED WATERPROOF CONTROL WIRE CONNECTIONS. SEE LEGEND FOR TYPE. PROVIDE MINIMUM 24" WIRE EXPANSION COILS AT VALVE.
13. SCH 80 PVC FEMALE ADAPTER (2 REQ.)
14. MASTER CONTROL VALVE. SEE LEGEND FOR TYPE.

NOTES:
A. USE SCH 80 PVC FITTINGS.
B. SET TOP OF VALVE BOX ½" ABOVE FINISHED GRADE IN TURF AREAS AND 1-1/2" ABOVE FINISHED GRADE IN GROUNDCOVER AND SHRUB AREAS.
C. SET VALVE BOX AND VALVE ASSEMBLY IN GROUNDCOVER / SHRUB AREAS WHERE POSSIBLE. INSTALL IN TURF ONLY IF THERE IS NO ADJACENT GROUNDCOVER.
D. USE TEFLON TAPE ON ALL THREADED FITTINGS, TYPICAL.
E. INSTALL 45 DEGREE ELLS AS REQUIRED TO ACHIEVE PROPER VALVE INSTALLATION ABOVE MAINLINE DEPTH.

P MASTER VALVE
NOT TO SCALE

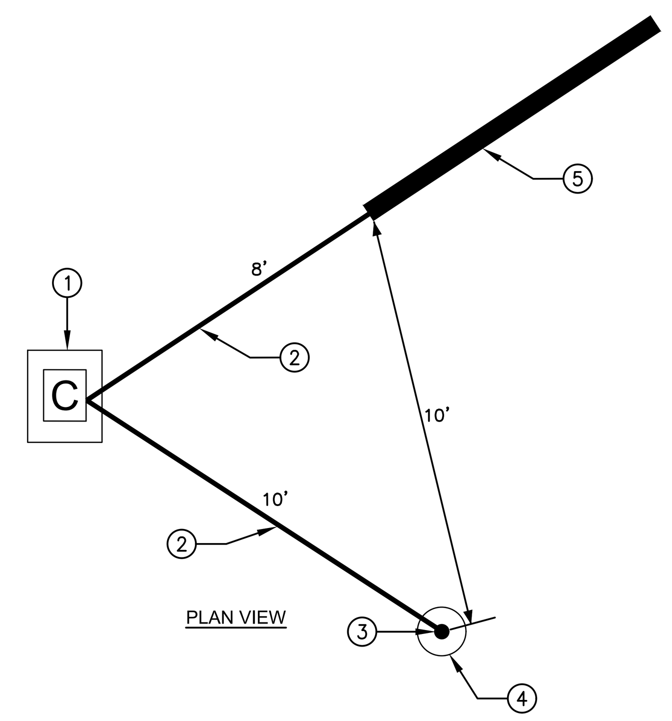

LEGEND
1. CONTROLLER ASSEMBLY PEDESTAL.
2. #6 AWG SOLID BARE COPPER WIRE.
3. U.L. APPROVED 5/8"x8' COPPER GROUND ROD WITH CADWELD 'ONE-SHOT' CONNECTION.
4. 10" ROUND SPECIFICATION GRADE VALVE BOX.
5. 4"x96" COPPER GROUND PLATE, U.L. APPROVED.

CC CONTROLLER GROUNDING
NOT TO SCALE

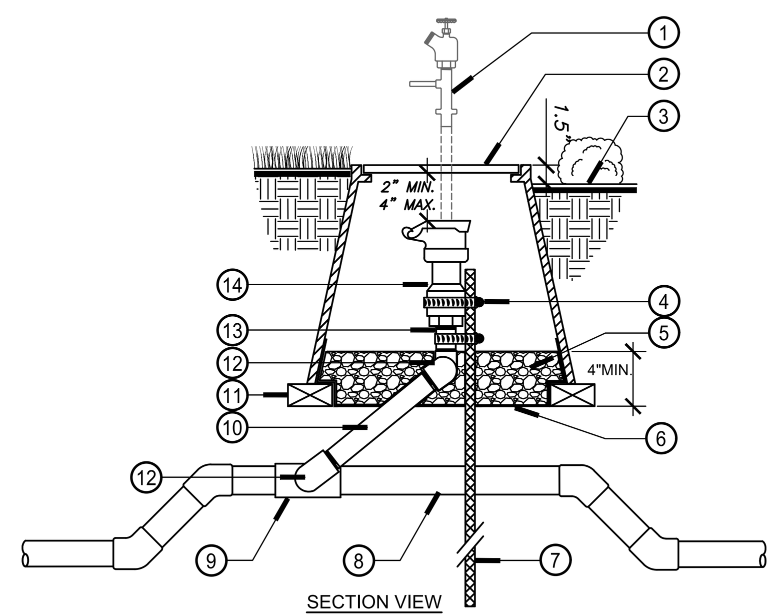

LEGEND:
1. REMOVABLE QUICK COUPLER KEY ASSEMBLY CONNECTION. KEY MUST CLEAR VALVE BOX, AS SHOWN.
2. 10" PLASTIC ROUND VALVE BOX. HEAT BRAND "QCV" ONTO LID.
3. FINISHED GRADE.
4. STAINLESS STEEL CLAMP - 2 REQUIRED.
5. 1/2" ROUND WASHED PEA GRAVEL - MINIMUM 4" DEPTH.
6. LANDSCAPE FABRIC.
7. #4 REBAR - 36" MINIMUM LENGTH.
8. PVC MAINLINE - SEE LEGEND FOR TYPE.
9. PVC SCH 80 TEE OR ELL
10. BRASS NIPPLE, 6" MINIMUM LENGTH
11. NOMINAL SIZE SOLID BRICK SUPPORTS (3 MINIMUM REQUIRED - SPACED EQUALLY).
12. BRASS ELL - 2 REQUIRED.
13. BRASS NIPPLE, LENGTH AS REQUIRED.
14. QUICK COUPLING VALVE WITH LOCKING COVER - SEE LEGEND FOR TYPE.

NOTES:
A. USE SCH. 80 PVC 45 DEGREE ELLS TO TRANSITION TO MAINLINE DEPTH.
B. SET TOP OF VALVE BOX 1-1/2" ABOVE FINISHED GRADE IN MULCH OR GROUNDCOVER / SHRUB AREAS, SET ½" ABOVE FINISHED GRADE IN TURF AREAS.
C. USE TEFLON TAPE ON ALL THREADED FITTINGS, TYPICAL.

Z QUICK COUPLER VALVE
NOT TO SCALE

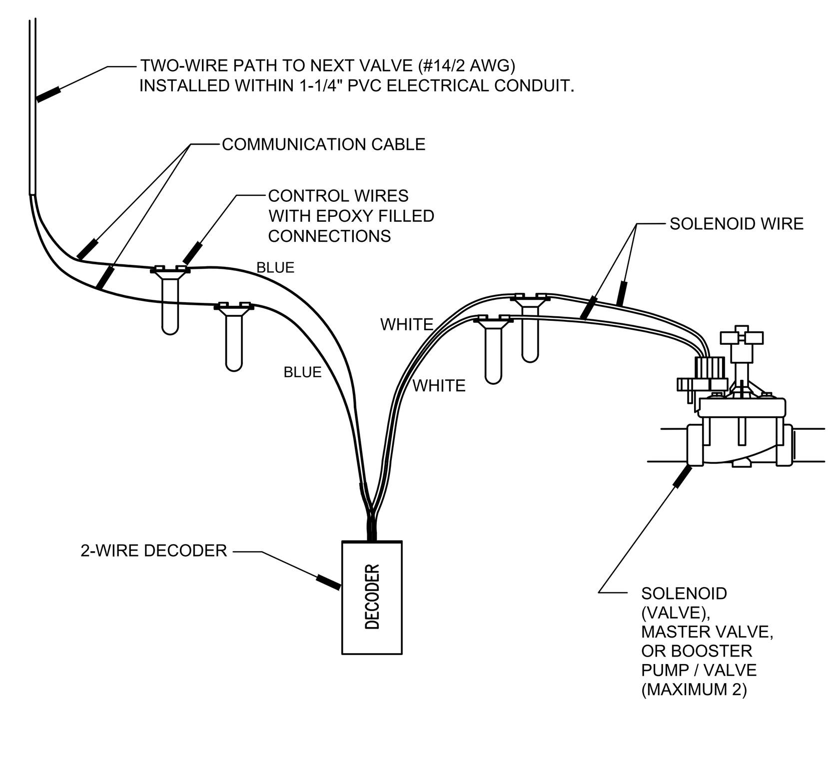

NOTE:
MAXIMUM LENGTH OF SECONDARY WIRE PATH (14 AWG) FROM DECODER TO SOLENOID IS 450 FEET.

W DECODER WIRING (TYPICAL)
NOT TO SCALE

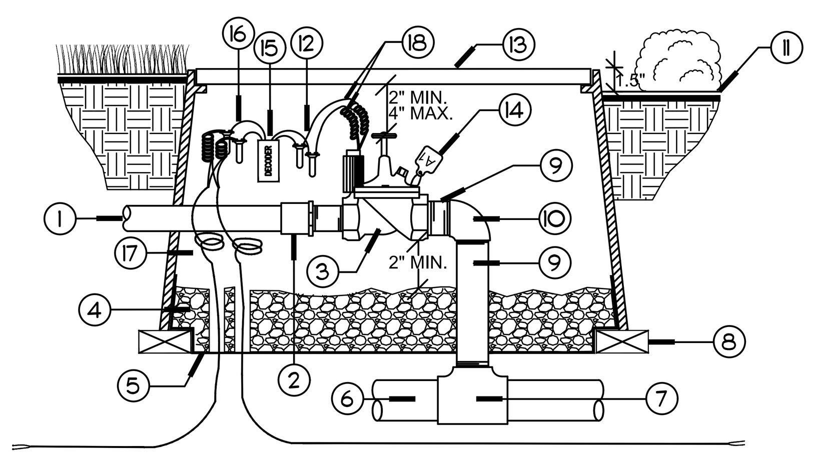

LEGEND
1. PVC LATERAL LINE PIPE
2. SCH 80 PVC FEMALE ADAPTER
3. REMOTE CONTROL VALVE, SEE LEGEND FOR TYPE
4. PEA GRAVEL MINIMUM 1 CUBIC FOOT
5. LANDSCAPE FABRIC
6. PVC MAINLINE, DEPTH PER SPECS.
7. SCH 80 PVC TEE
8. NOMINAL SIZE SOLID BRICK (4 REQ.)
9. SCH. 80 PVC NIPPLE LENGTH AS REQUIRED
10. SCH 80 PVC THREADED ELL
11. FINISHED GRADE
12. CONTROL WIRES WITH WATER PROOF CONNECTIONS, SEE LEGEND FOR TYPE. PROVIDE 24" COIL OF WIRE AT VALVE
13. PLASTIC RECTANGULAR VALVE BOX WITH LOCKING COVER, USE STAINLESS BOLT, NUT, AND WASHER. HEAT BRAND "RCV" & CONTROLLER STATION NUMBER ONTO LID.
14. CHRISTY'S VALVE STATION # I.D. TAG ATTACHED TO VALVE BONNET BOLT.
15. DECODER (BLUE CASE)
16. BLUE WIRES TO 2-WIRE COMMUNICATION PATH
17. 2-WIRE COMMUNICATION PATH.
18. WHITE WIRES TO SOLENOID

NOTES:
A. WIRES MUST EXTEND MINIMUM 24" ABOVE VALVE BOX FOR SERVICE.
B. SET TOP OF VALVE BOX 1/2" ABOVE FINISHED GRADE IN TURF AREAS AND 1-1/2" ABOVE FINISHED GRADE IN GROUND COVER AND SHRUB AREAS.
C. USE TEFLON TAPE ON ALL THREADED FITTINGS TYPICAL.
D. USE SCH 80 PVC FITTINGS.
E. INSTALL 45 DEGREE ELLS AS REQUIRED TO ACHIEVE PROPER VALVE INSTALLATION ABOVE MAINLINE DEPTH.

T REMOTE CONTROL VALVE (DECODER)
NOT TO SCALE

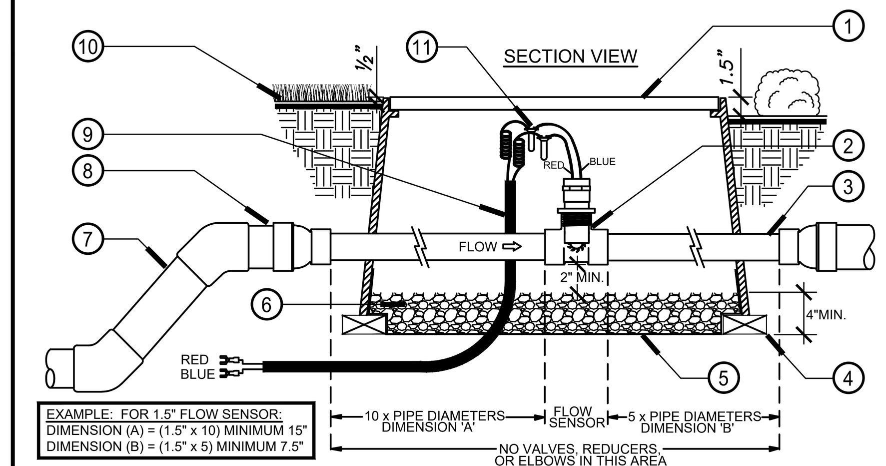

LEGEND:
1. PLASTIC RECTANGULAR VALVE BOX WITH BOLT DOWN COVER, USE STAINLESS BOLT NUT AND WASHER - HEAT BRAND "FS" ONTO LID.
2. FLOW SENSOR - SEE LEGEND FOR SIZE AND TYPE.
3. MAINLINE - SIZE PER FLOW SENSOR, LENGTH AS REQUIRED PER MANUFACTURE RECOMMENDATIONS.
4. NOMINAL SIZE SOLID BRICK (4 REQUIRED, ONE AT EACH CORNER).
5. LANDSCAPE FABRIC.
6. 1/2" ROUND WASHED PEA GRAVEL - MINIMUM 4" DEPTH.
7. PVC MAINLINE TO MASTER VALVE - SEE LEGEND FOR TYPE, SIZE PER PLAN.
8. SCH 80 REDUCER COUPLING - SIZE PER MAINLINE AND FLOW SENSOR (2 REQUIRED).
9. 1-1/4" SCH 40 PVC WIRE CONDUIT WITH SWEEP ELBOW TO CONTROLLER LOCATION. SEAL CONDUIT ENDS WITH EXPANDING SPRAY FOAM SEALANT.
10. FINISHED GRADE. SET TOP OF VALVE BOX ½" ABOVE GRADE IN TURF AREAS AND 1-1/2" ABOVE GRADE IN SHRUB / GROUNDCOVER AREAS.
11. EPOXY-FILLED WATERPROOF CONTROL WIRE CONNECTIONS - SEE LEGEND FOR TYPE. PROVIDE MINIMUM 24" WIRE EXPANSION COILS AT FLOW SENSOR.

NOTES:
A. USE SCH 80 PVC FITTINGS.
B. SET TOP OF VALVE BOX ½" ABOVE FINISHED GRADE IN TURF AREAS AND 1-1/2" ABOVE FINISHED GRADE IN GROUNDCOVER AND SHRUB AREAS.
C. SET VALVE BOX AND VALVE ASSEMBLY IN GROUNDCOVER / SHRUB AREAS WHERE POSSIBLE. INSTALL IN TURF ONLY IF THERE IS NO ADJACENT GROUNDCOVER.
D. USE TEFLON TAPE ON ALL THREADED FITTINGS, TYPICAL.
E. INSTALL 45 DEGREE ELLS AS REQUIRED TO ACHIEVE PROPER VALVE INSTALLATION ABOVE LATERAL LINE DEPTH.
F. INSTALL FLOW SENSOR PER MANUFACTUR'S RECOMMENDATIONS.

Q FLOW SENSOR
NOT TO SCALE

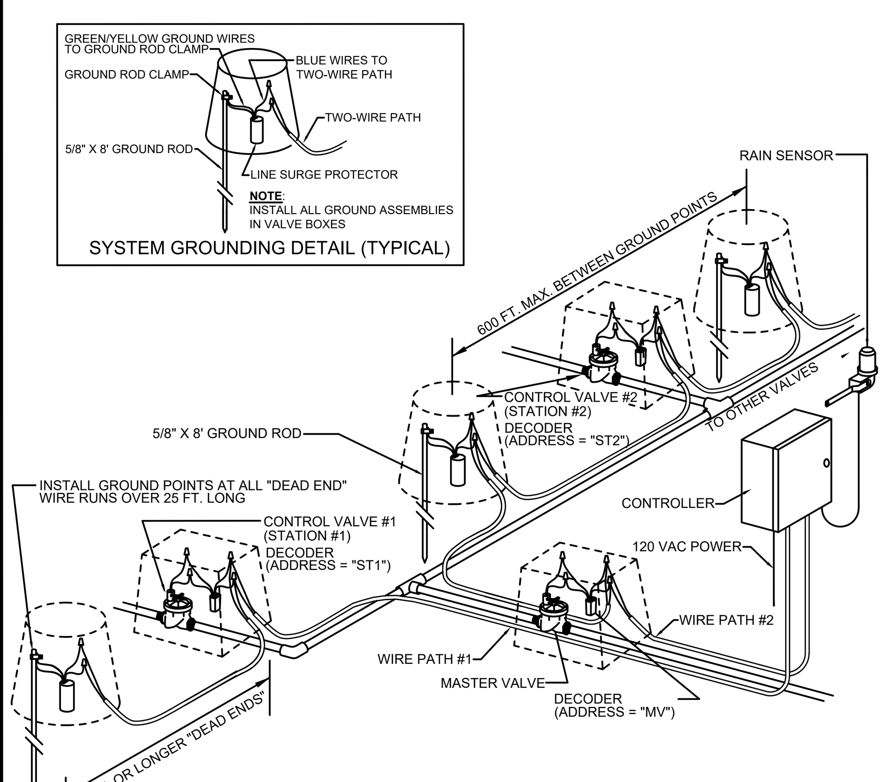

NOTES:
1. ALL WIRE CONNECTION SHALL BE MADE WITH APPROVED CONNECTORS.
2. MAKE ALL WIRE SPLICES IN VALVE BOXES.
3. LEAVE A MINIMUM OF 12" EXTRA WIRE AT ALL SPLICE POINTS.
4. TEST EARTH TO GROUND RESISTANCE AT ALL GROUND POINTS.
5. EARTH TO GROUND RESISTANCE MUST BE LESS THAN 50 OHMS.
6. ALL WIRE CONNECTION SHALL BE MADE WITH APPROVED CONNECTORS.
7. MAKE ALL WIRE SPLICES IN VALVE BOXES.
8. LEAVE A MINIMUM OF 12" EXTRA WIRE AT ALL SPLICE POINTS.
9. MAXIMUM DISTANCE FROM DECODER TO VALVE = 150 FT.
10.

DD SYSTEM GROUNDING (TYPICAL)
NOT TO SCALE

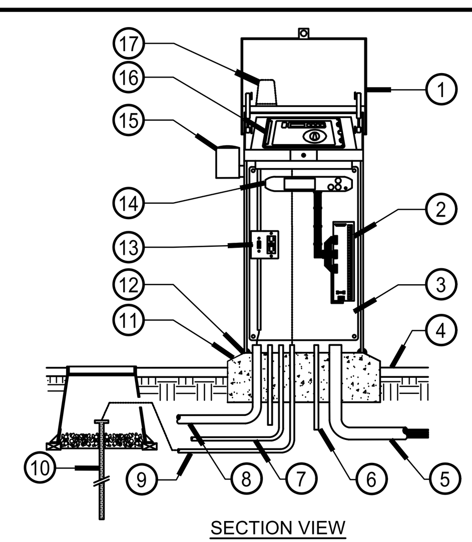

LEGEND:
1. STAINLESS STEEL, TOP-ENTRY CONTROLLER ENCLOSURE - NEMA 3R RAINPROOF RATED - WITH LOCKING LID, SHOWN OPEN.
2. TERMINAL STRIP FOR REMOTE CONTROL VALVE WIRE CONNECTION.
3. STAINLESS STEEL, U.L. LISTED, PRE-DRILLED, REMOVABLE BACKBOARD. REMOVABLE FRONT PANEL, NOT SHOWN.
4. FINISHED GRADE.
5. 3" PVC CONDUIT WITH SWEEP ELL FOR DIRECT BURIAL CONTROL WIRES TO CONTROL VALVES.
6. 1" PVC CONDUIT WITH SWEEP ELL FOR MASTER VALVE.
7. 1" PVC CONDUIT WITH SWEEP ELL FOR FLOW METER.
8. 1" PVC CONDUIT SWEEP FOR 120 VAC POWER FROM METERED SOURCE.
9. 1" PVC CONDUIT WITH SWEEP ELL FOR GROUND ROD CABLE.
10. (1) ⅝" X 8' COPPER GROUND ROD MINIMUM W/ #10 GROUND WIRE AND CLAMP. INSTALL INSIDE A 10" ROUND VALVE BOX - GROUND ROD TO BE LOCATED WITHIN 15' OF CONTROLLER. CONTRACTOR SHALL INSTALL ACTUAL GROUNDING EQUIPMENT PER MANUFACTURER'S SPECIFICATIONS.
11. POURED CONCRETE BASE - 6" MINIMUM THICKNESS - EXTEND 6" BEYOND OUTSIDE DIMENSIONS OF ENCLOSURE WITH ½% SLOPE FOR DRAINAGE - SLOPE EDGES TO DRAIN AWAY FROM CONTROLLER.
12. WATER PROOF EPOXY SEALANT AT CONTROLLER BASE.
13. POWER SWITCH AND RECEPTACLE.
14. "ET" MANAGER CARTRIDGE.
15. "ET" / RAIN SENSOR LOCATED WITHIN STAINLESS STEEL ENCLOSURE - SEE LEGEND FOR TYPE.
16. CONTROLLER - SEE LEGEND FOR TYPE.
17. REMOTE ANTENNA.

AA CONTROLLER ASSEMBLY
NOT TO SCALE

STEPS TO EXTENDING THE SYSTEM:
1. TAP AND EXTEND MAIN LINE.
2. SPLICE INTO WIRE AND EXTEND.
3. PROGRAM BLANK DECODER TO NEW STATION ADDRESS.
4. INSTALL NEW VALVE AND DECODER.
5. ENTER NEW STATION # (DECODER ADDRESS) AT CONTROLLER.

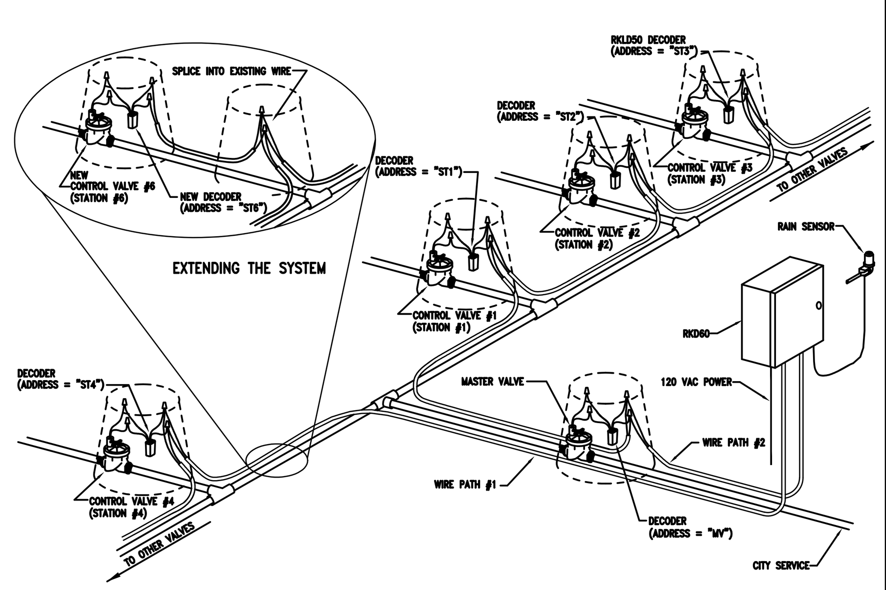

NOTES:
A. ALL WIRE CONNECTION SHALL BE MADE WITH APPROVED CONNECTORS.
B. MAKE ALL WIRE SPLICES IN VALVE BOXES.
C. LEAVE A MINIMUM OF 12" EXTRA WIRE AT ALL SPLICE POINTS.
D. MAXIMUM DISTANCE FROM DECODER TO VALVE = 150 FEET

X DECODER WIRING (TYPICAL)
NOT TO SCALE

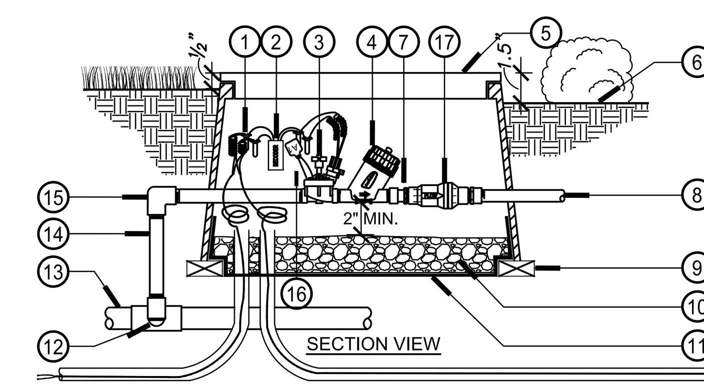

INSTALL 1" VALVE ASSEMBLY FOR DEMANDS (1 - 22) GPM.
INSTALL 1-1/2" VALVE ASSEMBLY FOR DEMANDS (23 - 55) GPM.

LEGEND:
1. CONTROL WIRES WITH WATER PROOF WIRE CONNECTORS, SEE LEGEND FOR TYPE. PROVIDE MINIMUM 24" COIL OF WIRE AT VALVE.
2. DECODER - SEE LEGEND FOR TYPE.
3. REMOTE CONTROL VALVE - SEE LEGEND FOR TYPE, SEE PLAN FOR SIZE.
4. WYE FILTER - SEE LEGEND FOR TYPE, SEE PLAN FOR SIZE.
5. PLASTIC RECTANGULAR JUMBO VALVE BOX WITH LOCKING COVER, USE STAINLESS BOLT, NUT, AND WASHER. HEAT BRAND "RCV" & CONTROLLER STATION NUMBER ONTO LID.
6. FINISHED GRADE - SET TOP OF VALVE BOX ½" ABOVE GRADE IN TURF AREAS AND 2" ABOVE GRADE IN SHRUB / GROUND COVER AREAS.
7. PVC SCH 80 SxT FEMALE ADAPTER.
8. PVC LATERAL LINE TO DRIP SYSTEM.
9. NOMINAL SIZE SOLID BRICK - 4 REQUIRED, ONE AT EACH CORNER OF VALVE BOX.
10. PEA GRAVEL - MINIMUM 4" DEPTH WITH 2" VALVE CLEARANCE.
11. LANDSCAPE FABRIC.
12. PVC SCH 80 NIPPLE (2" LENGTH, HIDDEN) AND PVC SCH 40 ELL.
13. PVC MAINLINE - DEPTH PER SPECIFICATIONS.
14. PVC SCH 80 NIPPLE - LENGTH AS REQUIRED.
15. PVC SCH 80 ELL.
16. CHRISTY'S VALVE STATION # I.D. TAG ATTACHED TO VALVE BONNET BOLT.
17. PRESSURE REGULATOR - SEE LEGEND FOR TYPE.

U DRIP REMOTE CONTROL VALVE (DECODER)
NOT TO SCALE

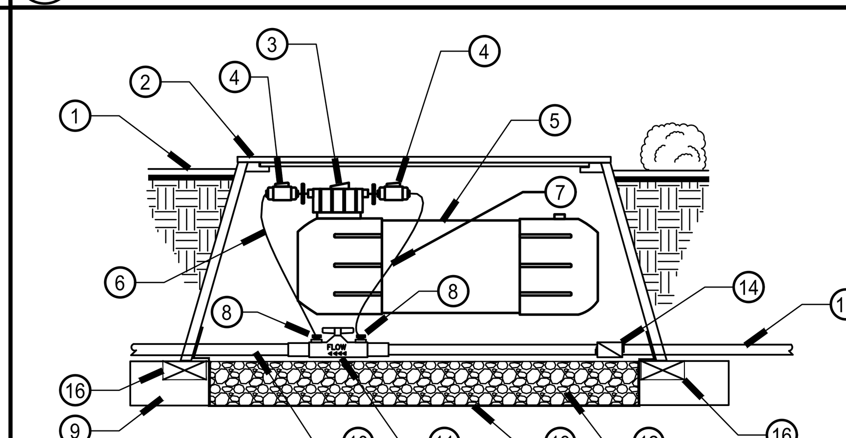

LEGEND:
1. FINISHED GRADE.
2. PLASTIC RECTANGULAR "JUMBO" VALVE BOX, SIZE BOX PER MANUFACTURE RECOMENDATION, WITH LOCKING COVER, USE STAINLESS BOLT, NUT, AND WASHER. HEAT BRAND "FI" ONTO LID.
3. PROPORTIONING CAP WITH FEED ADJUSTMENT KNOB.
4. EZ-FLO SHUT OFF VALVES.
5. EZ-FLO FERTILIZING SYSTEM, SEE LEGEND FOR SIZE.
6. (FERTILIZER OUT) CONNECT CLEAR TUBE TO GREEN CONNECTIONS ON PROPORTIONING CAP AND COUPLING.
7. (WATER IN) CONNECT BLACK TUBE TO BLUE CONNECTIONS ON PROPORTIONING CAP AND COUPLING.
8. 1/4" TUBING CLAMP - BOTH THE GREEN AND BLUE COUPLING TUBING CONNECTIONS.
9. APPROVED BACKFILL.
10. PVC MAIN LINE TO VALVE MANIFOLD.
11. EZ COUPLING CONNECTOR - INSTALL ACCORDING TO WATER FLOW DIRECTION ARROW, SIZE PER MAINLINE.
12. 1/2" ROUND WASHED PEA GRAVEL (MINIMUM 4" DEPTH).
13. LANDSCAPE FABRIC.
14. INLINE THREADED BRASS CHECK VALVE, SIZE PER MAINLINE.
15. PVC MAIN LINE FROM P.O.C EQUIPMENT.
16. NOMINAL SIZE SOLID BRICK (4 REQUIRED - ONE AT EACH CORNER OF VALVE BOX).

NOTE:
A. ITEMS 3, 4, 5, 6, 7 AND 8 ARE INCLUDED WITH THE EZ-FLO SYSTEM.
B. ITEM 11 IS PURCHASED SEPARATELY, SIZE ITEM 11PER MAINLINE.
C. FILL SYSTEM WITH FERTI-MAXX STARTER FERTILIZER PURCHASED SEPARATELY.
D. INSTALL PER MANUFACTURE RECOMMENDATION.

R FERTILIZING SYSTEM
NOT TO SCALE

RGA
Office of Architectural Design
15231 Alton Parkway, Suite 100
Irvine, CA 92618
T 949-341-0920
FX 949-341-0922

CONSULTANT

RLA
8841 RESEARCH DR
SUITE 200
IRVINE • CA 92618
949.387.1323
RIDGELA.COM

PROFESSIONAL SEALS

REGISTERED LANDSCAPE ARCHITECT
JAMES J. RIDGE
LIC. #2809
(Signature) 6/15/20
(Date)
05/31/21
(Exp. Date)
STATE OF CALIFORNIA

PROJECT NAME

LBA LOGISTIC CENTER III

14800 W. SCHULTE ROAD, TRACY, CA

L|B|A REALTY

LBA REALTY
3347 MICHELSON DRIVE, SUITE 200
IRVINE, CA 92612
D: 949-955-9333, C: 818-919-5336

MARK	DATE	DESCRIPTION
	06/15/20	1st COUNTY SUBMITTAL

RGA PROJECT NO:	19071.00
OWNER PROJECT NO:	00000.00
CAD FILE NAME:	--
DRAWN BY:	RLA
CHK'D BY:	RLA

COPYRIGHT
RGA, OFFICE OF ARCHITECTURAL DESIGN

SHEET TITLE
IRRIGATION DETAILS

SHEET: L6.2

DISTANCE CHART

REFER TO THE FOLLOWING TABLE THAT LISTS THE LENGTH (IN FEET) FOR EACH SIZE/TYPE FITTING WITHIN WHICH ALL JOINTS JUST BE RESTRAINED. ALL FITTINGS AND JOINT RESTRAINTS SHALL BE INSTALLED PER MANUFACTURERS RECOMMENDATIONS & SPECIFICATIONS.

AS AN EXAMPLE, IF YOU ARE INSTALLING A 3" MAINLINE WITH A DIRECTIONAL CHANGE OF 90°, REFER TO CHART UNDER PIPE SIZE TO 3" AND UNDER BENDS 90 YOU WILL SEE THE DISTANCE OF 11'. IF THERE IS ANY JOINT (VALVE, BELL, ETC.) YOU MUST INSTALL A JOINT RESTRAINT WITHIN 11' OF THE 90° MAINLINE DIRECTIONAL CHANGE.

PIPE	BENDS				REDUCERS			DEAD END	
SIZE	11°	22°	45°	90°	1 STEP	2 STEP	3 STEP	BLIND	SERV. B.
2"	1'	1'	2'	6'	-	-	-	19'	6'
2.5"	1'	2'	4'	9'	4'	-	-	23'	10'
3"	2'	3'	6'	11'	8'	10'	-	30'	15'
4"	2'	4'	9'	20'	14'	20'	31'	45'	25'
6"	3'	6'	13'	29'	30'	40'	53'	63'	40'
8"	4'	8'	15	38'	33'	55'	63'	75'	70'
10"	5'	9'	19'	45'	36'	56'	75'	96'	90'
12"	5'	10'	21'	53'	38'	60'	83'	112'	110'

INSTALLATION CHART

REFER TO THE FOLLOWING TABLE WHICH LISTS THE NUMBER OF BOLTS, SIZE, AND TORQUE FOR EACH BOLT IN REFERENCE TO THE SIZE OF PIPE WHICH IS BEING RESTRAINED.

AS AN EXAMPLE, IF YOU HAVE A 3" PIPE, YOU WILL NEED 2 BOLTS THAT ARE 3/8 X 2.5" AND TIGHTEN THEM WITH A TORQUE WRENCH TO 20 FT-LBS.

PIPE SIZE	NO. BOLTS	BOLT SIZE	TORQUE FT-LBS.
2"	2	3/8" x 2.5"	20
2.5"	2	3/8" x 2.5"	20
3"	2	3/8" x 2.5"	20
4"	2	1/2" x 3"	50
6"	2	1/2" x 3.5"	50
8"	4	1/2" x 4"	50
10"	4	5/8" x 5.5"	100
12"	4	5/8" x 5.5"	100

CONTACT TONY GARNER @ (208) 631-7787, THE LEEMCO REPRESENTATIVE, FOR ALL QUESTIONS CONCERNING LEEMCO PRODUCTS. COORDINATE AN INSTALLATION CLINIC WITH TONY GARNER PRIOR TO INSTALLING THE MAINLINE.

QQ JOINT RESTRAINT CHART DETAIL

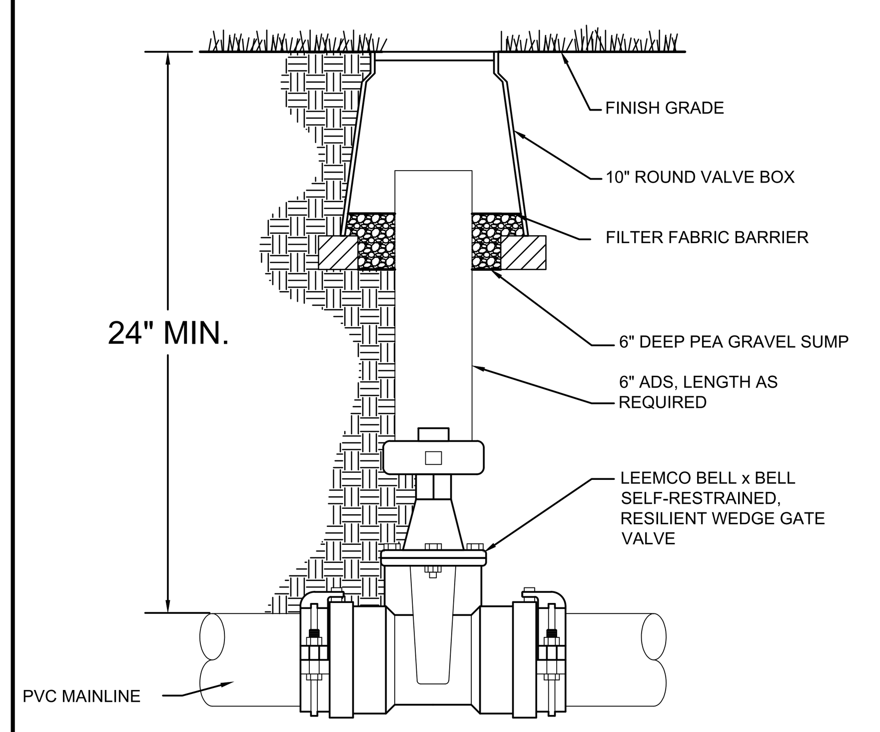

NN LMV-BB MAINLINE GATE VALVE DETAIL

NOT TO SCALE

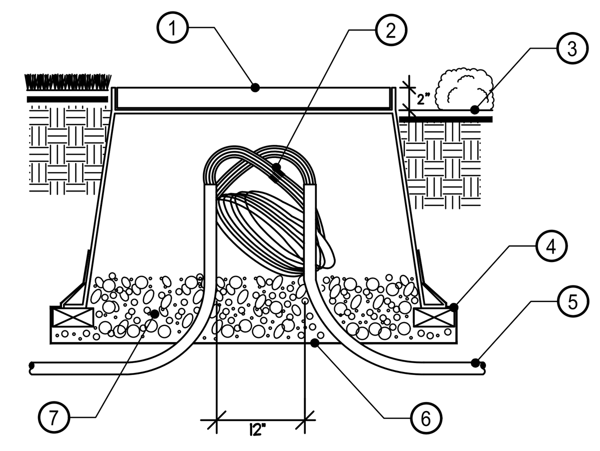

LEGEND:

1. BLACK PLASTIC RECTANGULAR VALVE BOX WITH LOCKING COVER, USE STAINLESS BOLT, NUT, AND WASHER. HEAT BRAND "PB" ONTO LID.
2. CONTROL WIRE CONNECTIONS, PRE-FILLED WITH WATER PROOF INSULATING GEL SEALANT. SEE LEGEND FOR TYPE. PROVIDE MINIMUM 36" WIRE EXPANSION COILS AT VALVE.
3. FINISHED GRADE. SET WIRE PULL BOX IN GROUNDCOVER / SHRUB AREAS WHERE POSSIBLE. INSTALL IN TURF ONLY IF THERE IS NO ADJACENT GROUNDCOVER. SET TOP OF VALVE BOX ½" ABOVE FINISHED GRADE IN TURF AREAS, AND 2" IN SHRUB / GROUND COVER AREAS.
4. BRICK SUPPORTS.
5. 2-WIRE COMMUNICATION PATH WITHIN 1-1/4" PVC CONDUIT / SWEEP ELL. SEAL CONDUIT ENDS WITH EXPANDING SPRAY FOAM SEALANT.
6. LANDSCAPE FABRIC.
7. 1/2" ROUND WASHED PEA GRAVEL - MINIMUM 4" DEPTH.

KK WIRE PULL BOX

NOT TO SCALE

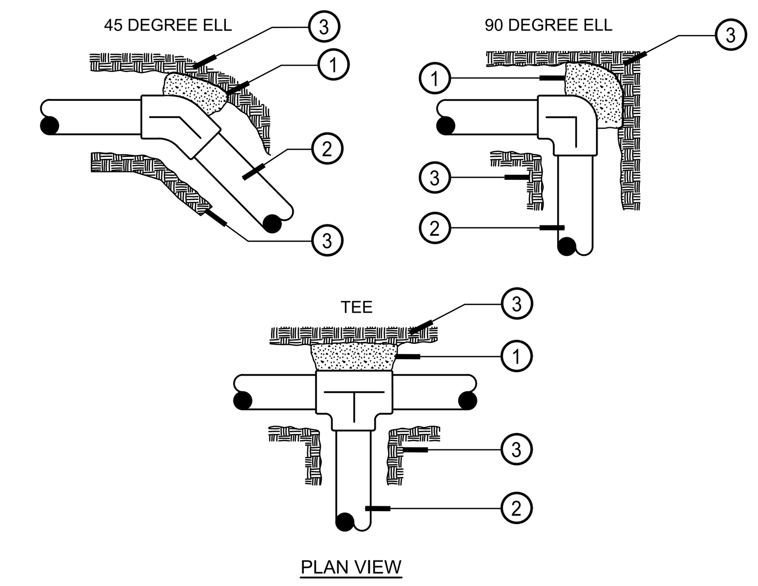

LEGEND:

1. CONCRETE THRUST BLOCK, TYPICAL.
2. MAINLINE PIPE - SEE LEGEND FOR TYPE.
3. UNDISTURBED SOIL.

NOTES:

A. THRUST BLOCKS TO BE MINIMUM 1 (ONE) CUBIC FEET OF CONCRETE.
B. THRUST BLOCKS TO BE USED FOR MAINLINE PVC PIPE 2-1/2" AND LARGER.
C. WRAP PLASTIC FITTINGS USING BLACK PIPE TAPE.
D. ALL CONCRETE TO BE PORTLAND CEMENT 420-C-2000.

HH THRUST BLOCK

NOT TO SCALE

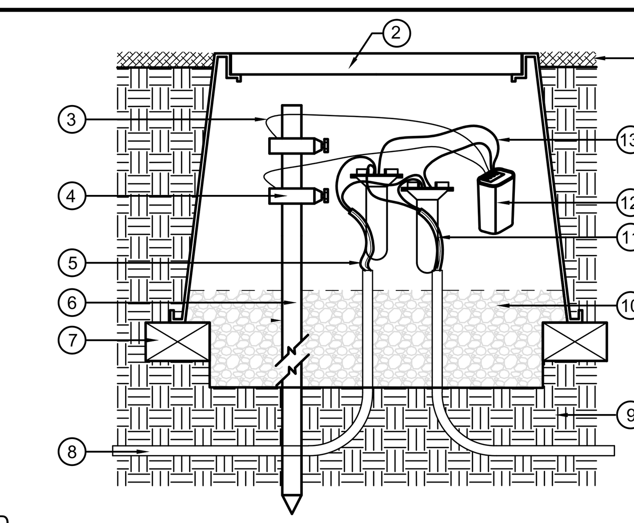

LEGEND

1. FINISH GRADE OR TOP OF MULCH
2. 10-INCH ROUND "BLACK" PLASTIC VALVE BOX. HEAT BRAND "SP" TO LID IN 2" HIGH BLOCK LETTERS.
3. WIRES FROM SURGE PROTECTOR TO GROUNDING ROD BRASS CLAMPS (1 OF 2, GREEN/YELLOW WIRES)
4. GROUNDING ROD CLAMP (1 OF 2)
5. TWO-WIRE CABLE, PER MANUFACTURE SPECIFICATION. LOOP 2' OF WIRE INSIDE OF BOX.
6. 5/8" X 8' GROUNDING ROD: 10 OHMS OR LESS
7. BRICK SUPPORT (1 OF 3)
8. 1-1/4" PVC CONDUIT WITH SWEEP ELLS. SEAL CONDUIT ENDS WITH EXPANDING SPRAY FOAM SEALANT.
9. 90% COMPACTED SUB-GRADE
10. 12-INCH MINIMUM DEPTH OF 3/4-INCH WASHED GRAVEL OVER FILTER FABRIC
11. 3M DBR/Y SPLICE KIT WIRE CONNECTOR: (1 OF 2)
12. TWO-WIRE LINE SURGE PROTECTOR
13. WIRE FROM SURGE PROTECTOR TO DB SERIES WIRE CONNECTOR (1 OF 2, BLUE WIRES)

NOTES:

1. SURGE PROTECTORS SHOULD BE INSTALLED EVERY XXX-FEET AS SPECIFIED PER MANUFACTURED.
2. SURGE PROTECTORS TO BE INSTALLED AT END OF WIRE RUN THAT TERMINATES IN THE FIELD (STAR CONFIGURATION).

N.T.S.

EE SURGE PROTECTOR GROUNDING ROD

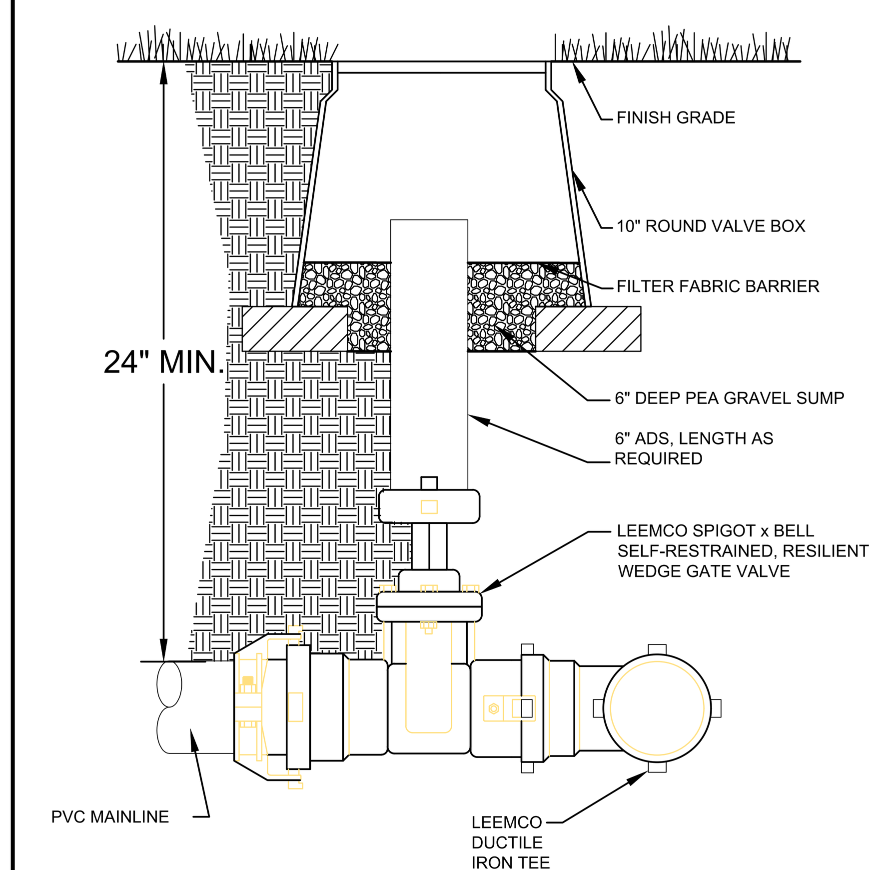

OO LMV-SB MAINLINE GATE VALVE DETAIL

NOT TO SCALE

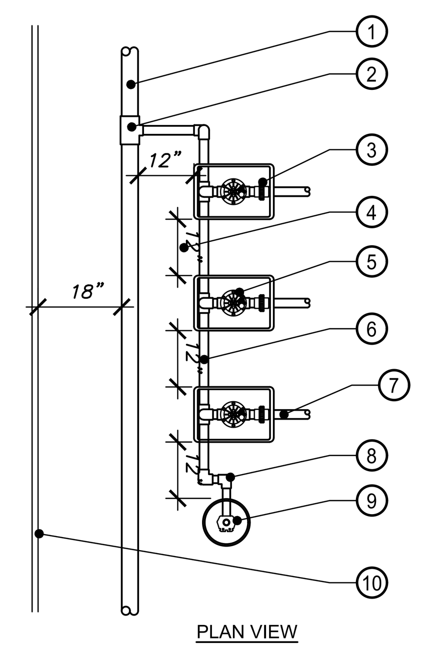

LEGEND:

1. IRRIGATION MAINLINE.
2. SCH 80 PVC TEE, SxSxT MAINLINE X MANIFOLD SIZE.
3. SCH 80 PVC UNION.
4. MINIMUM 12" SEPARATION BETWEEN ALL VALVE BOXES.
5. REMOTE CONTROL VALVE PLACED WITHIN PLASTIC RECTANGULAR VALVE BOX, TYPICAL.
6. IRRIGATION SUB-MAINLINE. SIZE PER LARGEST LATERAL LINE IN MANIFOLD.
7. LATERAL LINE TO SPRINKLERS.
8. QUICK COUPLER SWING JOINT.
9. QUICK COUPLER VALVE PLACED WITHIN A PLASTIC 10" ROUND VALVE BOX.
10. HARDSCAPE EDGE. INSTALL MAINLINE 18" OFF OF HARDSCAPE EDGE.

NOTES:

A. CENTER VALVE BOX OVER VALVE TO FACILITATE SERVICING OF VALVE.
B. SET VALVE BOX AND VALVE ASSEMBLY IN GROUNDCOVER / SHRUB AREAS WHERE POSSIBLE. INSTALL IN TURF AREAS ONLY WHEN THERE IS NO ADJACENT GROUNDCOVER.
C. SET VALVE BOXES 1-1/2" MAXIMUM ABOVE GRADE IN MULCH OR GROUNDCOVER / SHRUB AREAS, SET ½" ABOVE FINISH GRADE IN TURF AREAS.
D. SET VALVE BOXES PARALLEL TO ONE ANOTHER AND PERPENDICULAR TO EDGE.
E. AVOID HEAVY COMPACTION OF SOIL AROUND VALVE BOXES TO PREVENT THEIR DEFORMATION / COLLAPSE.
F. HEAT-BRAND APPROPRIATE CONTROLLER LETTER AND STATION NUMBER ONTO VALVE BOX LID.

LL MANIFOLD ASSEMBLIES

NOT TO SCALE

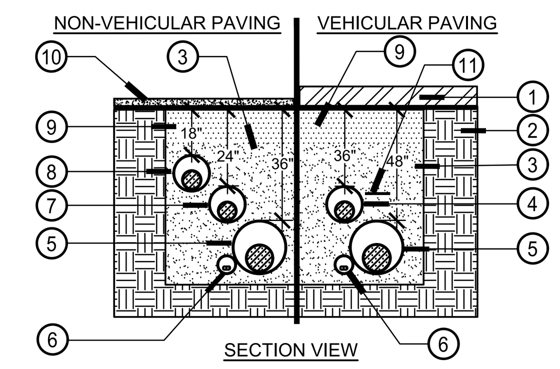

LEGEND:

1. ROAD PAVING.
2. UNDISTURBED SOIL.
3. SAND BACKFILL.
4. MAIN AND LATERAL LINE SLEEVE 2"- 4" DIAMETER SCHEDULE 40 PVC PIPE.
5. MAIN AND LATERAL LINE SLEEVE 6" DIAMETER OR GREATER SCHEDULE 40 PVC PIPE.
6. WIRE SLEEVE.
7. LATERAL LINE SLEEVE 6" DIAMETER OR GREATER SCHEDULE 40 PVC PIPE.
8. LATERAL LINE SLEEVE 2"-4" DIAMETER SCHEDULE 40 PVC PIPE. 2" MINIMUM SLEEVE SIZE.
9. CLEAN COMPACTED BACKFILL.
10. PAVING (NON-ROAD).
11. METALLIC BACKED LOCATING TAPE INSTALLED ENTIRE LENGTH OF THE SLEEVE, LOCATED DIRECTLY ABOVE SLEEVE, ATTACHED EVERY 5 FEET. TAPE SHALL BE MARKED "IRRIGATION" IN TWO INCH CAPITAL LETTERS EVERY THREE FEET ALONG THE TAPE.

NOTES:

A. SLEEVES SHALL BE TWICE THE DIAMETER OF THE PIPE OR WIRE BUNDLE CARRIED, MINIMUM 2" SIZE.
B. SLEEVES UNDER PAVING (NON-ROADS) LESS THAN 2" DIAMETER = 18" COVER, 2" - 5-1/2" DIAMETER = 24" COVER, 6" DIAMETER OR GREATER = 36" COVER - SCHEDULE 40 PVC PIPE.
C. SLEEVES UNDER ROADS, 6" DIAMETER OR LESS = 36" COVER, 6" DIAMETER OR GREATER = 48"COVER - SCHEDULE 80 PVC PIPE.
D. SLEEVE LOCATIONS SHALL BE MARKED AT EACH END AT THE TIME OF INSTALLATION WITH A PAINTED SPOT ON THE BACK FACE OF THE CURB OR OTHER SIMILAR MARKING.
E. EXACT SLEEVE LOCATION AND SIZE SHALL BE MARKED ON RECORD DRAWINGS WITH DIMENSIONING FOR IRRIGATION AS-BUILT PLANS PRIOR TO BACKFILL.
F. LINES MUST HAVE MINIMUM CLEARANCE OF 4" FROM EACH OTHER & 24" FROM OTHER TRADES.
G. RUN WIRING UNDER MAINLINE, TAPE & BUNDLE @ 10' O.C.
H. TIE A 24" LOOP IN ALL WIRING AT CHANGES IN DIRECTION.
I. ALL SLEEVES MUST HAVE EXPANDING FOAM SEALANT INSIDE PIPE ENDS.
J. ALL SLEEVES MUST EXTEND MINIMUM 12" DISTANCE PAST CURB OR SIDEWALK.

II SLEEVE INSTALLATION

NOT TO SCALE

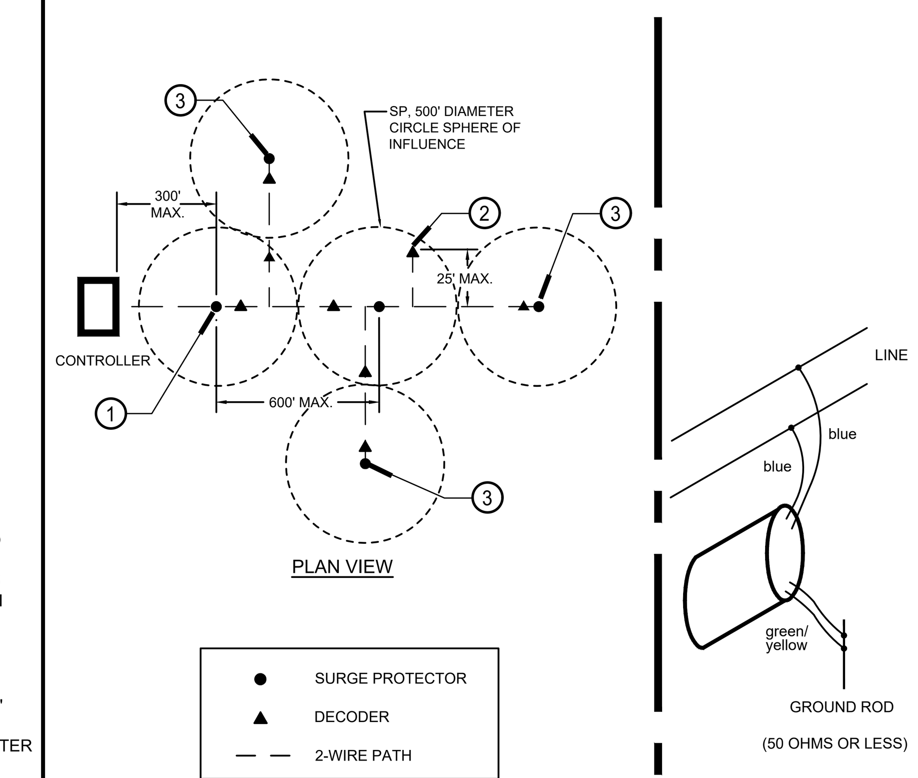

1. EACH SURGE PROTECTOR PROTECTS A 500' RADIUS INCLUDING LATERAL BRANCHING.
2. IF LATERAL BRANCHING IS LESS THAN 25' AN LSP IS NOT REQUIRED.
3. INCLUDE A LSP AT THE END OF ALL WIRE RUNS.

FF FIELD SURGE PROTECTOR

NOT TO SCALE

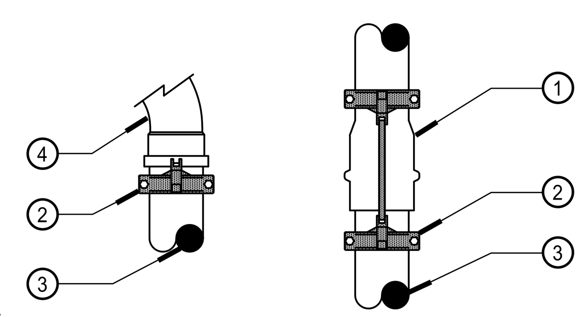

LEGEND:

1. IRRIGATION MAINLINE, BELL AND GASTET TYPE PIPE - SEE LEGEND FOR SPECIFICATION. COUPLING SHOWN.
2. LEEMCO LH-SERIES JOINT RESTRAINT.
3. PIPE INTO FITTING.
4. LEEMCO DUCTILE IRON PUSH-ON FITTING (TEE, 90 ELL OR 45 ELL).

NOTES:

A. USE JOINT RESTRAINTS ON BELL AND GASKET MAINLINE PIPE AT DIRECTIONAL CHANGES, GATE VALVES, AND COUPLINGS WITHIN 50 FEET OF DIRECTIONAL CHANGE.
B. USE LB SERIES RESTRAINTS FOR BELL AND GASKET JOINTS.
C. USE LH SERIES RESTRAINTS FOR PVC PIPE TO LEEMCO FITTINGS, INCLUDING 45 ELLS, 90 ELLS, MAINLINE TEES, AND VALVE STUB-OUTS.
D. USE TWO LH SERIES RESTRAINTS AND TWO TIE-BARS FOR PUSH ON GATE VALVES - SEE LEEMCO RECOMMENDATIONS.
E. USE TWO LMJ SERIES RESTRAINTS (CONSISTING OF ONE LH SERIES RESTRAINT AND TWO MJ-LK LINKS) FOR FLANGED GATE VALVES.
F. USE TWO LMJ SERIES RESTRAINTS (CONSISTING OF ONE LH SERIES RESTRAINT AND TWO MJ-LK LINKS) FOR FLANGED BUTTERFLY VALVES.
G. SIZE OF RESTRAINT TO BE AS PER PIPE AND FITTING USED.
H. ALL JOINT RESTRAINTS SHALL BE INSTALLED PER MANUFACTURERS RECOMMENDATIONS & SPECIFICATIONS.

PP PIPE RESTRAINTS

NOT TO SCALE

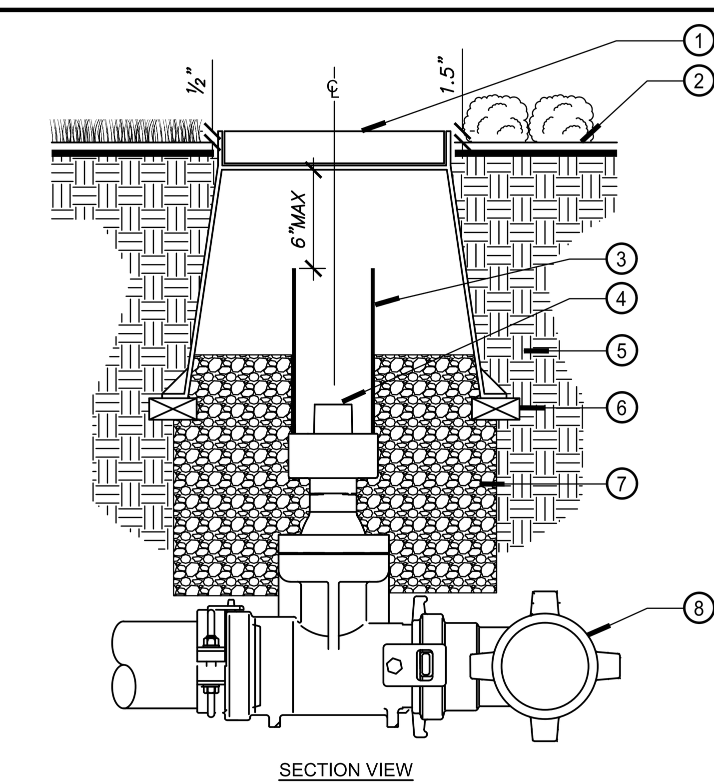

LEGEND:

1. 10" ROUND PLASTIC VALVE BOX W/ BOLT-DOWN LID - SEE LEGEND.
2. FINISHED GRADE.
3. PVC CL. 160 PIPE - LENGTH AS REQUIRED.
4. LEEMCO LMV-XX-XB SELF-RESTRAINED GATE VALVE - SEE LEGEND.
5. UNDISTURBED NATIVE SOIL.
6. NOMINAL SIZE SOLID BRICK - 3 REQUIRED FOR ROUND BOX - EQUALLY SPACED.
7. ONE CUBIC FOOT 1/2" ROUND WASHED PEA GRAVEL.
8. IRRIGATION MAINLINE.

MM GATE VALVE

NOT TO SCALE

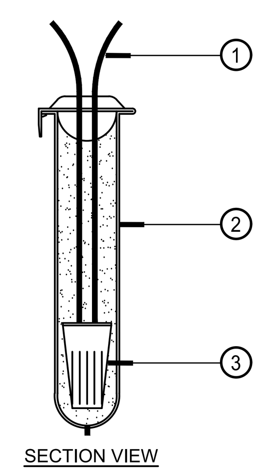

LEGEND:

1. LOW VOLTAGE WIRES - SEE LEGEND FOR SIZE AND TYPE.
2. POLY TUBE PRE-FILLED WITH WATERPROOF GEL - SEE LEGEND FOR TYPE.
3. WIRE CONNECTOR- AS APPROVED.

NOTES:

A. WIRES SHALL BE PRE-STRIPPED OF ½" OF THE INSULATION. JOIN WIRES AND TWIST TOGETHER. WIRE SPLICES MUST BE TWISTED WITH WIRE TWISTING TOOL WITH A MAXIMUM OF TWO WIRES PER TWIST, PRIOR TO INSTALLING CONNECTOR. TWIST CONNECTOR ONTO WIRES TO SEAT FIRMLY. FOR 2-WIRE DECODER SYSTEMS CORRECT WIRE CONNECTIONS ARE EXTREMELY IMPORTANT. REFER TO MANUFACTURE RECOMMENDATION FOR PROPER WIRE CONNECTIONS.
B. ALL WIRE CONNECTIONS SHALL INCLUDE A WIRE NUT CONNECTOR AND A POLY TUBE PRE-FILLED WITH WATERPROOF SEALING GEL.
C. DIRECT BURY SPLICE KIT MODEL # SA 101 SHALL BE USED TO ELECTRICALLY CONNECT 2 - #14 AND/OR 1 - #18 PRE-STRIPPED COPPER WIRES. LARGER WIRES OR GREATER QUANTITIES OF WIRES SHALL REQUIRE MODEL # SA102, A LARGER WIRE CONNECTOR.
D. ALL WIRE SPLICES SHALL BE PLACED WITHIN PLASTIC VALVE BOX OR WIRE PULL BOX.

JJ WIRE CONNECTION

NOT TO SCALE

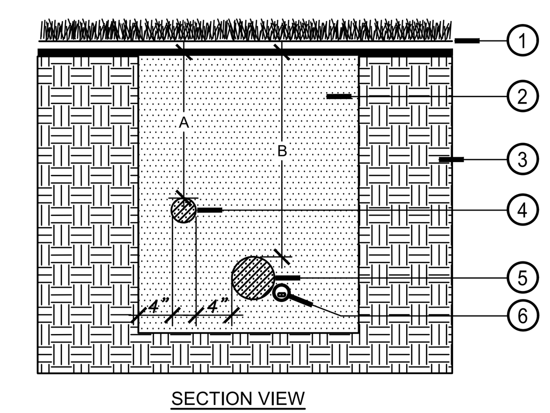

DIMENSION	A	B
3/4" TO 1-1/2" IN SIZE	12"	18"
2" TO 6" IN SIZE	18"	24"

LEGEND:

1. FINISHED GRADE.
2. CLEAN COMPACTED BACKFILL.
3. UNDISTURBED SOIL.
4. PVC LATERAL LINE - SEE LEGEND FOR TYPE.
5. PVC MAINLINE - SEE LEGEND FOR TYPE.
6. CONTROL WIRES INSTALLED WITHIN 1-1/4" PVC ELECTRICAL CONDUIT.

NOTES:

A. LINES MUST HAVE MINIMUM CLEARANCE OF 4" FROM EACH OTHER AND 24" FROM OTHER TRADES.
B. RUN WIRING UNDER MAINLINE. TAPE AND BUNDLE @ 10' O.C.
C. TIE A 24" LOOP IN ALL WIRING AT CHANGES IN DIRECTION.
D. CONTRACTOR MUST ADJUST MAINLINE AROUND ALL STREET LIGHT LOCATIONS.
E. PIPE SHALL BE SNAKED FROM SIDE-TO-SIDE ON TRENCH BOTTOM TO ALLOW FOR EXPANSION AND CONTRACTIONS.

GG PIPE INSTALLATION

NOT TO SCALE

RGA
Office of Architectural Design
15231 Alton Parkway, Suite 100
Irvine, CA 92618
T 949-341-0920
FX 949-341-0922

CONSULTANT

RLA
8841 RESEARCH DR
SUITE 200
IRVINE • CA 92618
949.387.1323
RIDGELA.COM

PROFESSIONAL SEALS

REGISTERED LANDSCAPE ARCHITECT
JAMES J. RIDGE
LIC. #2809
(Signature)
6/15/20
(Date)
05/31/21
(Exp. Date)
STATE OF CALIFORNIA

PROJECT NAME

LBA LOGISTIC CENTER III

14800 W. SCHULTE ROAD, TRACY, CA

LBA REALTY

LBA REALTY
3347 MICHELSON DRIVE, SUITE 200
IRVINE, CA 92612

D: 949-955-9333, C: 818-919-5336

MARK	DATE	DESCRIPTION
	06/15/20	1st COUNTY SUBMITTAL

RGA PROJECT NO:	19071.00
OWNER PROJECT NO:	00000.00
CAD FILE NAME:	--
DRAWN BY:	RLA
CHK'D BY:	RLA

COPYRIGHT
RGA, OFFICE OF ARCHITECTURAL DESIGN

SHEET TITLE

IRRIGATION DETAILS

SHEET: L6.3

APPENDIX C
14900 W Schulte Construction Drawings

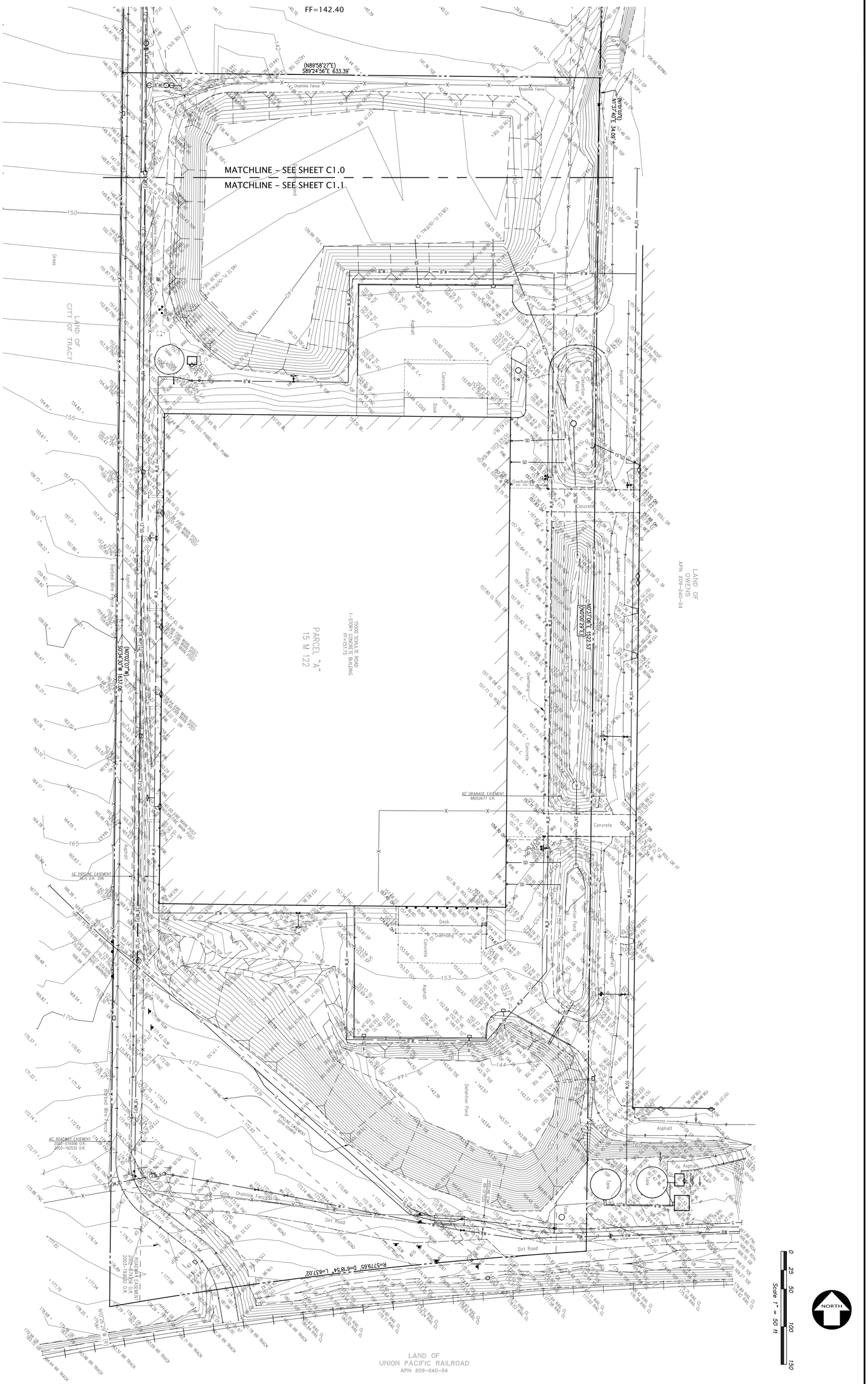

TOPOGRAPHIC SURVEY
OF
14900 SCHULTE ROAD
FOR
LBA REALITY
TRACY, CALIFORNIA

KIER & WRIGHT
CIVIL ENGINEERS & SURVEYORS, INC.
2850 Collier Canyon Road Phone (925) 245-8788
Livermore, California 94551 Fax (925) 245-8796

NO.	REVISION	BY
2	BID SET 01/23/2017	DGR
3	BID ADDENDUM 02/24/2017	DGR
4	BID ADDENDUM 05/30/2017	
5	BID ADDENDUM 04 08/11/2017	

NO.	REVISION	BY
6	SD PUMP REVISION 09/11/2017	
7	FIRE AND DOMESTIC WELL 10/06/2017	
8	LOWER SITE 0.15' AND ENLARGE SEPTIC AREA 10/20/2017	
9	CONSTRUCTION SET 12/04/2017	

SHEET C1.2 OF - SHEETS
DATE OCT 2016
SCALE 1" = 40'
SURVEYOR R.J.H.
DRAFTER H.L.
JOB NO. A16603

2017-12-04 - CONSTRUCTION SET

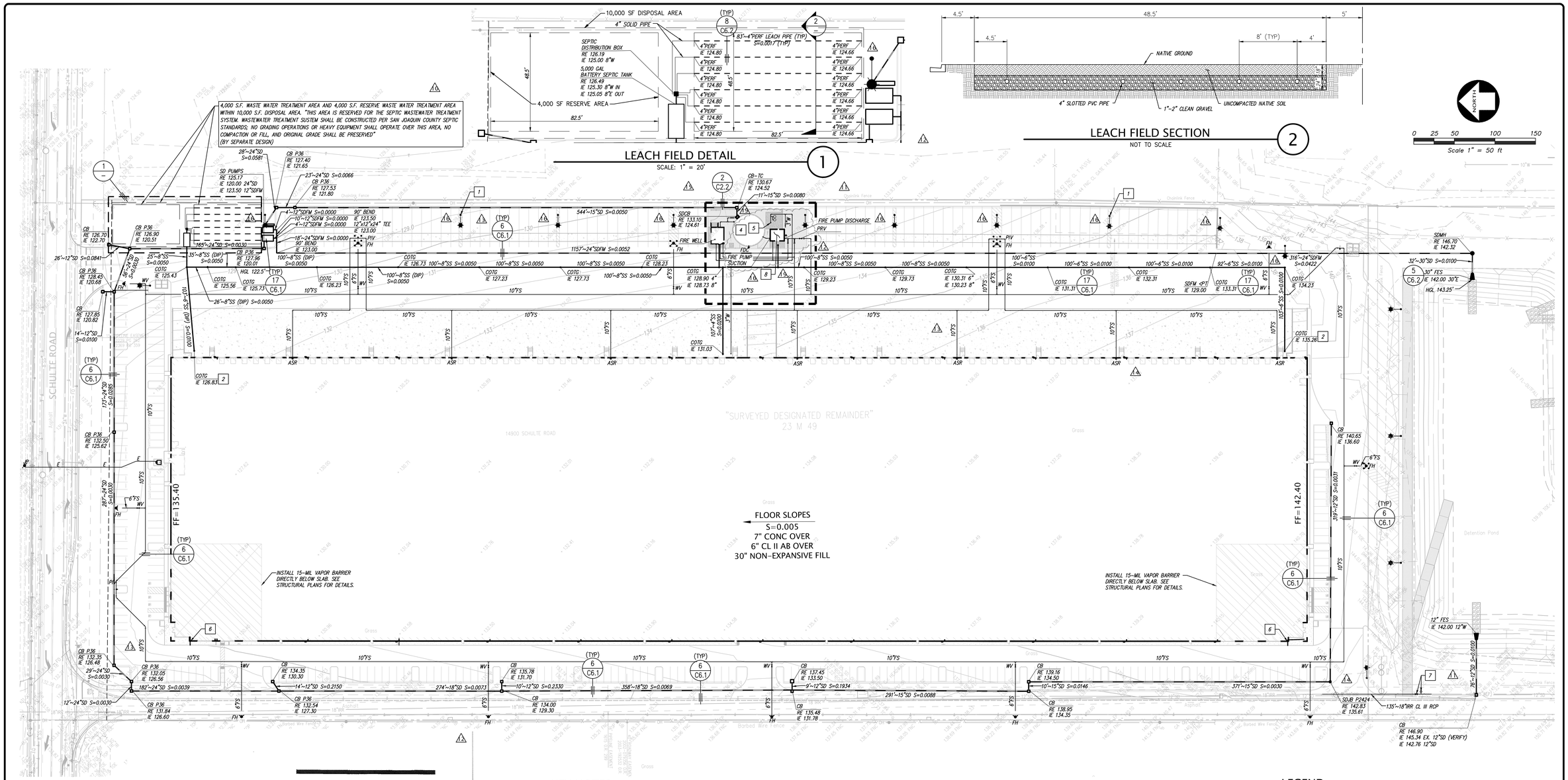

5000 GALLON COMMERCIAL SEPTIC TANK

MODEL TY-5000-EPE-ST
TRAFFIC RATED
LISTED BY UPC®

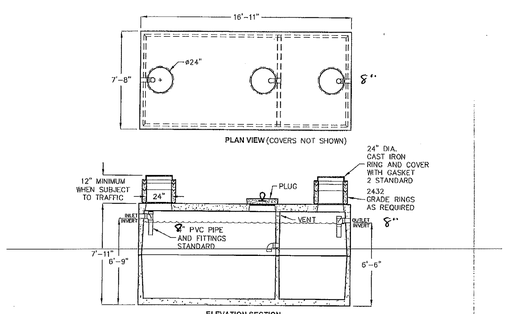

OPERATING CAPACITY: 5000 GALLONS.

DESIGN LOAD: H-20 TRAFFIC WITH DRY SOIL CONDITIONS (WATER LEVEL BELOW TANK) AND 1'-6" EARTH COVER.

SUITABLE SUB-BASE BEDDED WITH GRANULAR MATERIAL SHALL BE PREPARED TO HANDLE ANTICIPATED LOADS.

FOR COMPLETE DESIGN AND PRODUCT INFORMATION CONTACT JENSEN PRECAST.

MINIMUM EXCAVATION 8'-8" x 17'-11" x REQ'D DEPTH

JENSEN PRECAST

Jensen Precast reserves the right to make changes to product design and/or dimensions without notice. Please contact Jensen Precast whenever necessary for confirmation or advice on product design.

11/3/2008
TY5000-EPE-ST_NDCA_A.DWG
©2008

KEY NOTES

1. SEE SHEET SD.8 DETAIL 1 OF THE STRUCTURAL PLANS FOR LIGHT POLE BASE DETAIL (TYP.)
2. SEE PLUMBING PLANS FOR SEWER CONTINUATION UNDER BUILDING
3. 6"SS SEWER INVERT SHALL MATCH CROWN OF EXISTING 12"SS
4. 100,000 GALLON FIRE SUPPRESSION TANK. 24'ø
5. PRIVATE WELL, SEE DETAIL 6/C6.2
6. ROOF DRAIN CONNECTED TO CURB-O-LET CURB DRAIN PER DETAIL 1 SHEET C2.0 (TYP).
7. NEW 12" AIR VENT, SHUTOFF VALVE, AND MONITORING STRUCTURE. REUSE EX. METER, VALVE AND STRUCTURES IF POSSIBLE.
8. DOMESTIC AND FIRE WATER SYSTEM IS SCHEMATIC AND SHOWN FOR REFERENCE ONLY. SEPARATE DEFERRED SUBMITTAL.

UTILITY NOTES

1. BACKFILLING AND COMPACTION FOR ALL TRENCHES SHALL BE INSPECTED AND APPROVED BY THE GEOTECHNICAL ENGINEER.
2. CONTRACTOR TO VERIFY ALL EXISTING INVERT ELEVATIONS FOR STORM DRAIN AND SANITARY SEWER CONSTRUCTION PRIOR TO ANY SITE WORK. ALL WORK FOR STORM DRAIN AND SANITARY SEWER INSTALLATION SHALL BEGIN AT THE DOWNSTREAM CONNECTION POINT. THIS WILL ALLOW FOR ANY NECESSARY ADJUSTMENTS TO BE MADE PRIOR TO THE INSTALLATION OF THE ENTIRE LINE. IF THE CONTRACTOR FAILS TO BEGIN AT THE DOWNSTREAM CONNECTION POINT AND WORKS UPSTREAM, HE SHALL PROCEED AT HIS OWN RISK AND BE RESPONSIBLE FOR ANY ADJUSTMENTS NECESSARY.
3. ALL WORK ON-SITE AND IN THE PUBLIC RIGHT OF WAY SHALL CONFORM TO SAN JOAQUIN COUNTY STANDARDS AND REQUIREMENTS.
4. GENERAL CONTRACTOR SHALL COORDINATE ALL UNDERGROUND UTILITIES. PROVIDE 6" MINIMUM BETWEEN PIPES CROSSING ELECTRICAL LINES HORIZONTALLY AND 12" MINIMUM BETWEEN PARALLEL PIPES CROSSING ELECTRICAL LINES.
5. FOR UTILITY MATERIALS AND TYPES, SEE THE PROJECT SPECIFICATIONS IF APPLICABLE AND NOT IDENTIFIED ON THESE PLANS.
6. WATER LINES SHALL BE 12" MINIMUM ABOVE SANITARY SEWER LINE AT ALL CROSSINGS.
7. MINIMUM COVER FOR WATER LINES IS 3.0 FEET.
8. MINIMUM COVER FOR FIRE SERVICE LINES IS 4.0 FEET.
9. SANITARY SEWER SHALL BE PVC SDR 35 EXCEPT WHERE DUCTILE IRON PIPE (DIP) IS NOTED OR AS REQUIRED BY THE LOCAL JURISDICTION. CONTRACTOR SHALL VERIFY REQUIREMENTS PRIOR TO PLACING HIS BID. DUCTILE IRON PIPE (DIP) SHALL BE CLASS 50.
10. DOMESTIC WATER LINES ¾"-3" SHALL BE SCHEDULE 40 PVC, 4" AND ABOVE SHALL BE C900 DR 18 PIPE.
11. FIRE SERVICE LINES 6"-12" SHALL BE C900 DR 14, UNLESS SPECIFIED OTHERWISE ON FIRE SHOP DRAWINGS.
12. GRADING AND INSTALLATION OF SEPTIC PIPES AND LEACH FIELD SHALL BE DONE IN ACCORDANCE WITH THE SAN JOAQUIN COUNTY ONSITE WASTEWATER DISPOSAL STANDARD

UNDERGROUND FIRE PROTECTION SYSTEM NOTES

1. THE UNDERGROUND FIRE PROTECTION SYSTEM SHOWN ON THIS DRAWING IS SCHEMATIC AND IS NOT INTENDED TO BE AN INSTALLATION DRAWING. THIS DRAWING SHALL NOT BE USED AS A BASE SHEET FOR SHOP DRAWINGS WITHOUT WRITTEN APPROVAL OF THE PREPARER.
2. THE UNDERGROUND FIRE PROTECTION SYSTEM INSTALLER SHALL PREPARE SHOP DRAWINGS SHOWING ALL INFORMATION REQUESTED BY SPECIFICATIONS, NFPA 13, 24 AND THE LOCAL FIRE MARSHAL.
3. THE UNDERGROUND FIRE PROTECTION SYSTEM INSTALLER SHALL SUBMIT SHOP DRAWINGS TO THE LOCAL FIRE MARSHAL/BUILDING OFFICIAL AND THE OWNER'S REVIEWING AGENT FOR PERMIT AND APPROVAL/ACCEPTANCE.
4. THE UNDERGROUND FIRE PROTECTION SYSTEM INSTALLER SHALL SUBMIT SHOP DRAWINGS TO THE ARCHITECT, ALLOWING TIME FOR REVIEW AND ACCEPTANCE, PRIOR TO START OF WORK. REQUIREMENTS FOR SHOP DRAWINGS SUBMITTAL ARE LISTED IN SPECIFICATIONS.
5. SHOP DRAWINGS, APPROVED BY THE LOCAL FIRE MARSHAL AND OWNER'S REVIEWING AGENT, SHALL BE SUBMITTED BY THE UNDERGROUND FIRE PROTECTION SYSTEM INSTALLER, TO THE ARCHITECT, PRIOR TO REQUESTING FINAL APPROVAL AND PAYMENT. REQUIREMENTS FOR SHOP DRAWINGS SUBMITTAL ARE LISTED IN SPECIFICATIONS.
6. REFER TO SPECIFICATIONS FOR UNDERGROUND FIRE PROTECTION SYSTEM REQUIREMENTS. SPECIFICATIONS ARE PART OF THE CONTRACT DOCUMENTS AND APPLIES TO THE GENERAL CONTRACTOR AND THE FIRE PROTECTION SYSTEM INSTALLER.
7. GENERAL CONTRACTOR IS RESPONSIBLE FOR VERIFICATION OF COMPLIANCE OF THE SHOP DRAWINGS TO THE PLANS AND SPECIFICATIONS PRIOR TO SUBMITTAL.
8. GENERAL CONTRACTOR SHALL NOT DIVIDE THE WORK SPECIFIED UNDER THIS SECTION BETWEEN SUBCONTRACTORS.
9. GENERAL CONTRACTOR IS RESPONSIBLE FOR VERIFICATION OF ALL DIMENSIONS AND EQUIPMENT LOCATIONS. RISER LOCATIONS ARE SHOWN ON ARCHITECTURAL DRAWINGS.
10. SEE ARCHITECTURAL FLOOR PLANS FOR DIMENSIONED AUTOMATIC SPRINKLER RISER (ASR) LOCATIONS.

LEGEND

PROPOSED	EXISTING		PROPOSED	EXISTING	
		ASPHALT BERM	AD	AD	AREA DRAIN
		BUILDING LINE	ARV	ARV	AIR RELEASE VALVE
		CENTER LINE	AVP	AVP	AIR VALVE POST
		CONCRETE CURB	ASR	ASR	AUTOMATIC SPRINKLER RISER
		CONCRETE CURB & GUTTER	BFPD	BFPD	BACKFLOW PREVENTION DEVICE
300	300	CONTOUR LINE	BOV	BOV	BLOWOFF VALVE
		DRIVEWAY	CATVB	CATVB	CABLE TELEVISION BOX
		EDGE OF PAVEMENT	CTB	CTB	CALTRANS BOX
		ELECTRIC LINE	CB	CB	CATCH BASIN
		FENCE LINE	COTG	COTG	CLEANOUT TO GRADE
		FIRE SERVICE & VALVE	DS	DS	DOWN SPOUT
		FIBER OPTICS LINE	EB	EB	ELECTRIC BOX
		GAS LINE-VALVE & METER	ETS	ETS	ELECTROLYSIS TEST STATION
		GUARD RAIL	FF	FF	FINISHED FLOOR
		LOT LINE	FH	FH	FIRE HYDRANT
		MONUMENT/MONUMENT LINE	FL	FL	FLOW LINE
		OVERHEAD POWER LINE	FOM	FOM	FIBER OPTICS MARKER
		JOINT TRENCH LINE	GLM	GLM	GAS LINE MARKER
		PERFORATED STORM DRAIN PIPE	GM	GM	GAS METER
		PROPERTY LINE	GV	GV	GAS VALVE
		SANITARY SEWER-MANHOLE & CLEANOUT	GA	GA	GUY ANCHOR
		SIDEWALK	IE	IE	INVERT ELEVATION
100.00	100.00	SPOT ELEVATION	IB	IB	IRRIGATION BOX
		STORM DRAIN-MANHOLE & CATCH BASIN	JP	JP	JOINT POWER POLE
		THRU CURB DRAIN	LT	LT	LIGHT
		TELEPHONE LINE	PBMH	PBMH	PAC BELL MANHOLE
		WATER LINE & VALVE	POC	POC	POINT OF CONNECTION
		BACKFLOW PREVENTION DEVICE	PIV	PIV	POST INDICATOR VALVE
		ELECTROLIER	PP	PP	POWER POLE
		FIRE HYDRANT	PRV	PRV	PRESSURE REDUCING VALVE
		POST INDICATOR VALVE	RWL	RWL	RAIN WATER LEADER
		POWER POLE/JOINT POLE	RVP	RVP	RELEASE VALVE POST
		TRANSFORMER	RE	RE	RIM ELEVATION
		TRAFFIC SIGN	SSCO	SSCO	SANITARY SEWER CLEANOUT
		UTILITY BOX	SSMH	SSMH	SANITARY SEWER MANHOLE
			SMH	SMH	SPRINT MANHOLE
			SM	SM	SPRINT MARKER
			SDMH	SDMH	STORM DRAIN MANHOLE
			SDJB	SDJB	STORM DRAIN JUNCTION BOX
			SL	SL	STREET LIGHT
			SLB	SLB	STREET LIGHT BOX
			TB	TB	TELEPHONE BOX
			TMH	TMH	TELEPHONE MANHOLE
			TSB	TSB	TRAFFIC SIGNAL BOX
			TSP	TSP	TRAFFIC SIGNAL POLE
			WB	WB	WATER BOX
			WM	WM	WATER METER
			WV	WV	WATER VALVE

NO.	REVISION	BY	DATE
1	CONSTRUCTION SET	DGR	12/04/2017
2	FIRE AND DOM WELL IRR VENT AND SERVICE	DGR	01/03/2018
3	SEPTIC TANK AND LEACH FIELD REVISIONS	DGR	01/23/2018
4	FIRE SERVICE AND WELL REVISIONS	DGR	02/16/2018
5	REVISED ASR & STORM DRAIN LOCATIONS	DGR	03/06/2018
6	BULLETIN 2	DGR	05/09/2018
7	BULLETIN 3	DGR	06/13/2018
8	FIRE SERVICE REVISION	DGR	06/28/2018
9	FIRE YARD REVISIONS	DGR	07/13/2018

KIER & WRIGHT
CIVIL ENGINEERS & SURVEYORS, INC.
2850 Collier Canyon Road
Livermore, California 94551
Phone (925) 245-8788
Fax (925) 245-8796

REGISTERED PROFESSIONAL ENGINEER DAVID C. READLER No. 76867 CIVIL STATE OF CALIFORNIA

UTILITY PLAN
OF
14900 WEST SCHULTE ROAD
FOR
LBA REALTY

SAN JOAQUIN COUNTY, CALIFORNIA

DATE	08/11/2017
SCALE	1" = 50'
DESIGNER	DGR
JOB NO.	A16603
SHEET	C3
OF	11 SHEETS

2018-06-13 - BULLETIN 3

Z:\2016\A16603\A16603-CDS.dwg 7-13-18 01:38:17 PM mWitz

APPENDIX D
14800 W Schulte Well Completion Report, E-Logs, and Draw Down Testing

State of California

Well Completion Report

Form DWR 188 Auto-Completed 11/9/2020

WCR2020-012758

Owner's Well Number | Date Work Began: 08/03/2020 | Date Work Ended: 08/06/2020

Local Permit Agency: San Joaquin County Environmental Health Department

Secondary Permit Agency | Permit Number: WP0041001 | Permit Date: 07/31/2020

Well Owner (must remain confidential pursuant to Water Code 13752)

Name: LBA FUND

Mailing Address: 3347 MICHELSON DR.

City: ERVIN | State: CA | Zip: 92612

Planned Use and Activity

Activity: New Well

Planned Use: Water Supply Domestic

Well Location

Address: 14800 W SCHULTE RD

City: TRACY | Zip: 95377 | County: San Joaquin

Latitude: 37 Deg. 43 Min. 10.9416 Sec. N | Longitude: -121 Deg. 29 Min. 32.604 Sec. W

Dec. Lat.: 37.719706 | Dec. Long.: -121.49239

Vertical Datum | Horizontal Datum: WGS84

Location Accuracy: 0.1 Ft | Location Determination Method: GPS

APN: 20924023

Township

Range

Section

Baseline Meridian

Ground Surface Elevation: 127

Elevation Accuracy: 0.1 Ft

Elevation Determination Method: GPS

Borehole Information

Orientation: Vertical | Specify

Drilling Method: Reverse Circulation | Drilling Fluid: Bentonite

Total Depth of Boring: 390 Feet

Total Depth of Completed Well: 390 Feet

Water Level and Yield of Completed Well

Depth to first water (Feet below surface)

Depth to Static Water Level (Feet) | Date Measured

Estimated Yield* (GPM) | Test Type

Test Length (Hours) | Total Drawdown (feet)

*May not be representative of a well's long term yield.

Geologic Log - Free Form

Depth from Surface Feet to Feet		Description
0	9	BROWN CLAY
9	10	HARD PAN
10	20	BROWN CLAY
20	37	SAND
37	146	BROWN CLAY
146	180	BLUE CLAY
180	233	BROWN CLAY
233	243	SAND
243	284	BROWN CLAY
284	298	SAND
298	300	BROWN CLAY
300	328	SAND
328	368	BROWN CLAY
368	384	SAND
384	390	BROWN CLAY

Casings

Casing #	Depth from Surface Feet to Feet		Casing Type	Material	Casings Specificatons	Wall Thickness (inches)	Outside Diameter (inches)	Screen Type	Slot Size if any (inches)	Description
1	0	320	Blank	Corrosion-Resistant High Strength Low-Alloy Steel	Nominal Size: 8 in. | Thickness: 1/4 in. | OD: 8-5/8 in.	0.25	8.625			
1	320	335	Screen	Spiral Weld Stainless Steel	Nominal Size: 8 in. | Thickness: 1/4 in. | OD: 8-5/8 in.	0.25	8.625	Louver	0.06	FUL-FLOW
1	335	370	Blank	Corrosion-Resistant High Strength Low-Alloy Steel	Nominal Size: 8 in. | Thickness: 1/4 in. | OD: 8-5/8 in.	0.25	8.625			
1	370	385	Screen	Spiral Weld Stainless Steel	Nominal Size: 8 in. | Thickness: 1/4 in. | OD: 8-5/8 in.	0.25	8.625	Louver	0.06	FUL-FLOW
1	385	390	Blank	Corrosion-Resistant High Strength Low-Alloy Steel	Nominal Size: 8 in. | Thickness: 1/4 in. | OD: 8-5/8 in.	0.25	8.625			

Annular Material

Depth from Surface Feet to Feet		Fill	Fill Type Details	Filter Pack Size	Description
200	390	Filter Pack	8 x 16		GRAVEL PACK
0	200	Cement	10.3 Sack Mix		SANITARY SEAL

Other Observations:

Borehole Specifications

Depth from Surface Feet to Feet		Borehole Diameter (inches)
0	390	18

Certification Statement

I, the undersigned, certify that this report is complete and accurate to the best of my knowledge and belief

Name: QUALITY WELL DRILLERS (Person, Firm or Corporation)

260 AIR PARK RD (Address) | ATWATER (City) | CA (State) | 95301 (Zip)

Signed: *electronic signature received* (C-57 Licensed Water Well Contractor) | 09/10/2020 (Date Signed) | 468732 (C-57 License Number)

DWR Use Only

CSG #	State Well Number	Site Code	Local Well Number

N — Latitude Deg/Min/Sec

W — Longitude Deg/Min/Sec

TRS:

APN:

State of California

Well Completion Report

Form DWR 188 In Review 11/25/2020

WCR2020-016317

Owner's Well Number | Date Work Began: 08/11/2020 | Date Work Ended: 08/20/2020

Local Permit Agency: San Joaquin County Environmental Health Department

Secondary Permit Agency | Permit Number: WP0041002 | Permit Date: 07/27/2020

Well Owner (must remain confidential pursuant to Water Code 13752)

Name: LBA FUND,

Mailing Address: 3347 Michelson Dr.

City: Ervin | State: CA | Zip: 92612

Planned Use and Activity

Activity: New Well

Planned Use: Water Supply Industrial

Well Location

Address: 14800 schulte

City: tracy | Zip: 95377 | County: San Joaquin

Latitude: 37 Deg. 43 Min. 9.0768 Sec. N | Longitude: -121 Deg. 29 Min. 32.5824 Sec. W

Dec. Lat.: 37.719188 | Dec. Long.: -121.492384

Vertical Datum | Horizontal Datum: WGS84

Location Accuracy | Location Determination Method

APN

Township

Range

Section

Baseline Meridian

Ground Surface Elevation: 129

Elevation Accuracy: 0.1 Ft

Elevation Determination Method: GPS

Borehole Information

Orientation: Vertical | Specify

Drilling Method: Reverse Circulation | Drilling Fluid: Bentonite

Total Depth of Boring: 670 Feet

Total Depth of Completed Well: 670 Feet

Water Level and Yield of Completed Well

Depth to first water (Feet below surface)

Depth to Static Water Level (Feet) | Date Measured

Estimated Yield* (GPM) | Test Type

Test Length (Hours) | Total Drawdown (feet)

*May not be representative of a well's long term yield.

Geologic Log - Free Form

Depth from Surface Feet to Feet		Description
0	9	Brown Clay
9	10	Hard Pan
10	20	Brown Clay
20	37	Sand
37	142	Brown Clay
142	175	Blue Clay
175	231	Brown Clay
231	240	Sand
240	293	Brown Clay
293	296	Sand
296	313	Brown Clay
313	323	Sand & Gravel
323	364	Brown Clay
364	377	Sand & Gravel
377	409	Brown Clay

409	420	Sand & Clay
420	431	Brown Clay
431	433	Sand
433	458	Brown Clay
458	468	Sand & Gravel
468	482	Brown Clay
482	489	Sand & Gravel
489	511	Brown Clay
511	518	Sand
518	520	Hard Pan
520	529	Sand & Gravel
529	601	Brown Clay
601	638	Sand & Gravel
638	655	Brown Clay
655	661	Brown Clay & Sand
661	670	Brown Clay

Casings

Casing #	Depth from Surface Feet to Feet		Casing Type	Material	Casings Specificatons	Wall Thickness (inches)	Outside Diameter (inches)	Screen Type	Slot Size if any (inches)	Description
1	0	160	Blank	Corrosion-Resistant High Strength Low-Alloy Steel	Nominal Size: 16 in. | Thickness: 1/4 in. | OD: 16-5/8 in.	0.25	16.625			
1	160	360	Blank	Corrosion-Resistant High Strength Low-Alloy Steel	Nominal Size: 16 in. | Thickness: 3/8 in. | OD: 16-5/8 in.	0.375	16.625			
1	360	380	Screen	Spiral Weld Stainless Steel	Nominal Size: 16 in. | Thickness: 1/4 in. | OD: 16-5/8 in.	0.25	16.625	Louver	0.06	
1	380	460	Blank	Corrosion-Resistant High Strength Low-Alloy Steel	Nominal Size: 16 in. | Thickness: 3/8 in. | OD: 16-5/8 in.	0.375	16.625			
1	460	530	Screen	Spiral Weld Stainless Steel	Nominal Size: 16 in. | Thickness: 1/4 in. | OD: 16-5/8 in.	0.25	16.625	Louver	0.06	
1	530	600	Blank	Corrosion-Resistant High Strength Low-Alloy Steel	Nominal Size: 16 in. | Thickness: 3/8 in. | OD: 16-5/8 in.	0.375	16.625			
1	600	640	Screen	Spiral Weld Stainless Steel	Nominal Size: 16 in. | Thickness: 1/4 in. | OD: 16-5/8 in.	0.25	16.625	Louver	0.06	
1	640	670	Blank	Corrosion-Resistant High Strength Low-Alloy Steel	Nominal Size: 16 in. | Thickness: 3/8 in. | OD: 16-5/8 in.	0.375	16.625			

Annular Material

Depth from Surface Feet to Feet		Fill	Fill Type Details	Filter Pack Size	Description
0	200	Cement	10.3 Sack Mix		Sanitary Seal
200	670	Filter Pack	8 x 16		Gravel Pack

Other Observations:

Borehole Specifications

Depth from Surface Feet to Feet		Borehole Diameter (inches)
0	670	26

Certification Statement

I, the undersigned, certify that this report is complete and accurate to the best of my knowledge and belief

Name: QUALITY WELL DRILLERS (Person, Firm or Corporation)

260 AIR PARK RD	ATWATER	CA	95301
Address	City	State	Zip

Signed: *electronic signature received*	11/24/2020	468732
C-57 Licensed Water Well Contractor	Date Signed	C-57 License Number

DWR Use Only

CSG #	State Well Number	Site Code	Local Well Number

					N

Latitude Deg/Min/Sec

					W

Longitude Deg/Min/Sec

TRS:

APN:

Dewey Data

LBA FUND WELL

COMPANY	: LBA FUND VI-MM INDUSTRIAL LLC			OTHER SERVICES:	
WELL	: LBA FUND WELL			062520	
LOCATION/FIELD	: TRACY			400PPM	
COUNTY	: SAN JOAQUIN			WP00408	
LOCATION	: CA				
SECTION	: N/A	TOWNSHIP	: N/A	RANGE	: N/A
DATE	: 06/25/20	PERMANENT DATUM	: GL		
DEPTH DRILLER	: 700			KB	: N/A
LOG BOTTOM	: 700.9	LOG MEASURED FROM:	GL	DF	: N/A
LOG TOP	: 0.9	DRL MEASURED FROM:	GL	GL	: N/A
CASING DIAMETER	:	LOGGING UNIT	: 2		
CASING TYPE	: STEEL	FIELD OFFICE	: DEWEY DATA		
CASING THICKNESS:		RECORDED BY	: KRW		
BIT SIZE	: 7	BOREHOLE FLUID	: MUD	FILE	: ORIGINAL
MAGNETIC DECL.	: 14	RM	: .179	TYPE	: 9144A
MATRIX DENSITY	: 2.65	RM TEMPERATURE	: 68.5	LGDATE	: 06/25/20
NEUTRON MATRIX	: SANDSTONE	MATRIX DELTA T	: 54	THRESH:	99999

QUAL TY WELL DRILLING
37.719896N -121.492510W

ALL SERVICES PROVIDED SUBJECT TO STANDARD TERMS AND CONDITIONS

Scanned with CamScanner

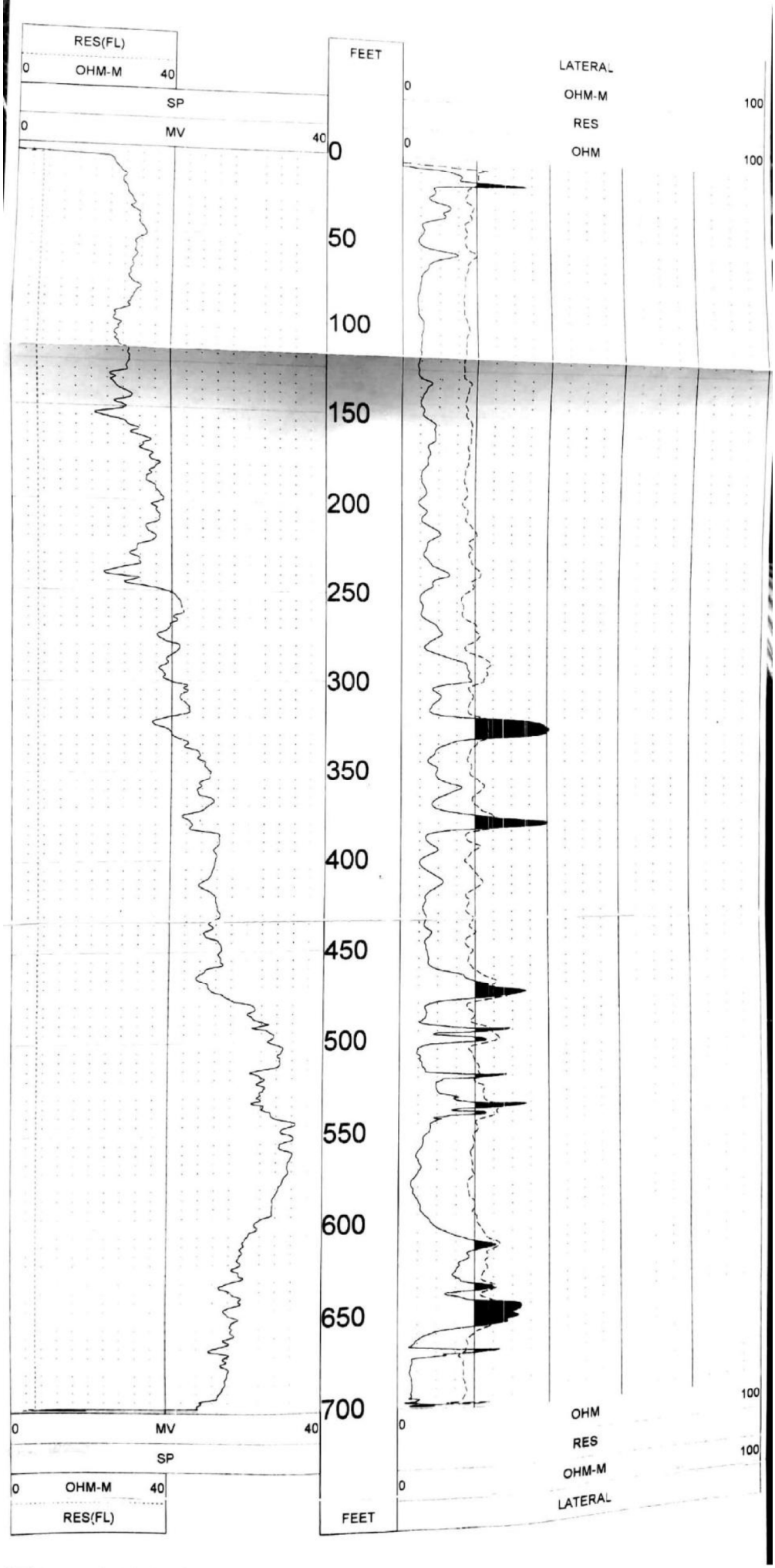

CS Scanned with CamScanner

DEWEY DATA INC

LBA FUND VI - T. H. - 1

COMPANY	: MMI INDUSTRIAL LL			OTHER SERVICES:	
WELL	: LBA FUND VI - T. H. -			1000PP	
LOCATION/FIELD	: TRACY			08182	
COUNTY	: SAN JOAQUI				
LOCATION	: CA				
SECTION	:	TOWNSHIP	:	RANGE	:
DATE	: 08/18/2	PERMANENT DATUM	: GL		
DEPTH DRILLER	: 670			KB	:
LOG BOTTOM	: 672.2	LOG MEASURED FROM:	GL	DF	:
LOG TOP	: -0.6	DRL MEASURED FROM:	GL	GL	:
CASING DIAMETER	:	LOGGING UNIT	: 006		
CASING TYPE	:	FIELD OFFICE	:		
CASING THICKNESS:		RECORDED BY	: TY		
BIT SIZE	: 25	BOREHOLE FLUID	: MUD	FILE	: PROCESSE
MAGNETIC DECL.	: 15	RM	: .179	TYPE	: 9144A
MATRIX DENSITY	: 2.65	RM TEMPERATURE	: 68.5	LGDATE	: 08/18/20
NEUTRON MATRIX	: SANDSTON	MATRIX DELTA T	: 54	LGTIME	: 10:30:
				THRESH	: 99999

QUALITY WELL
N37.7198, W-121.490

ALL SERVICES PROVIDED SUBJECT TO STANDARD TERMS AND CONDITIONS

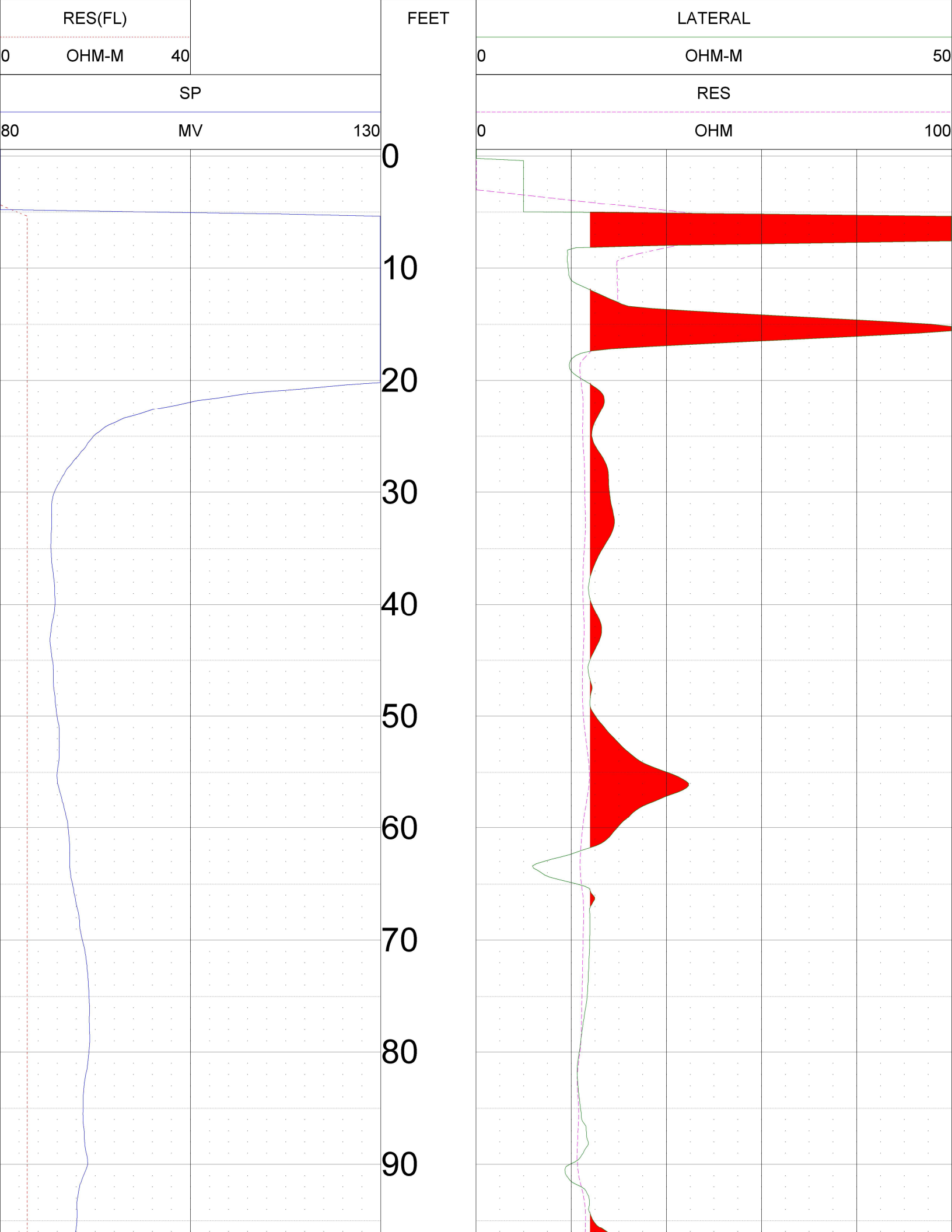
RES(FL)
0
OHM-M
40
SP
80
MV
130
FEET
0
10
20
30
40
50
60
70
80
90
LATERAL
0
OHM-M
50
RES
0
OHM
100

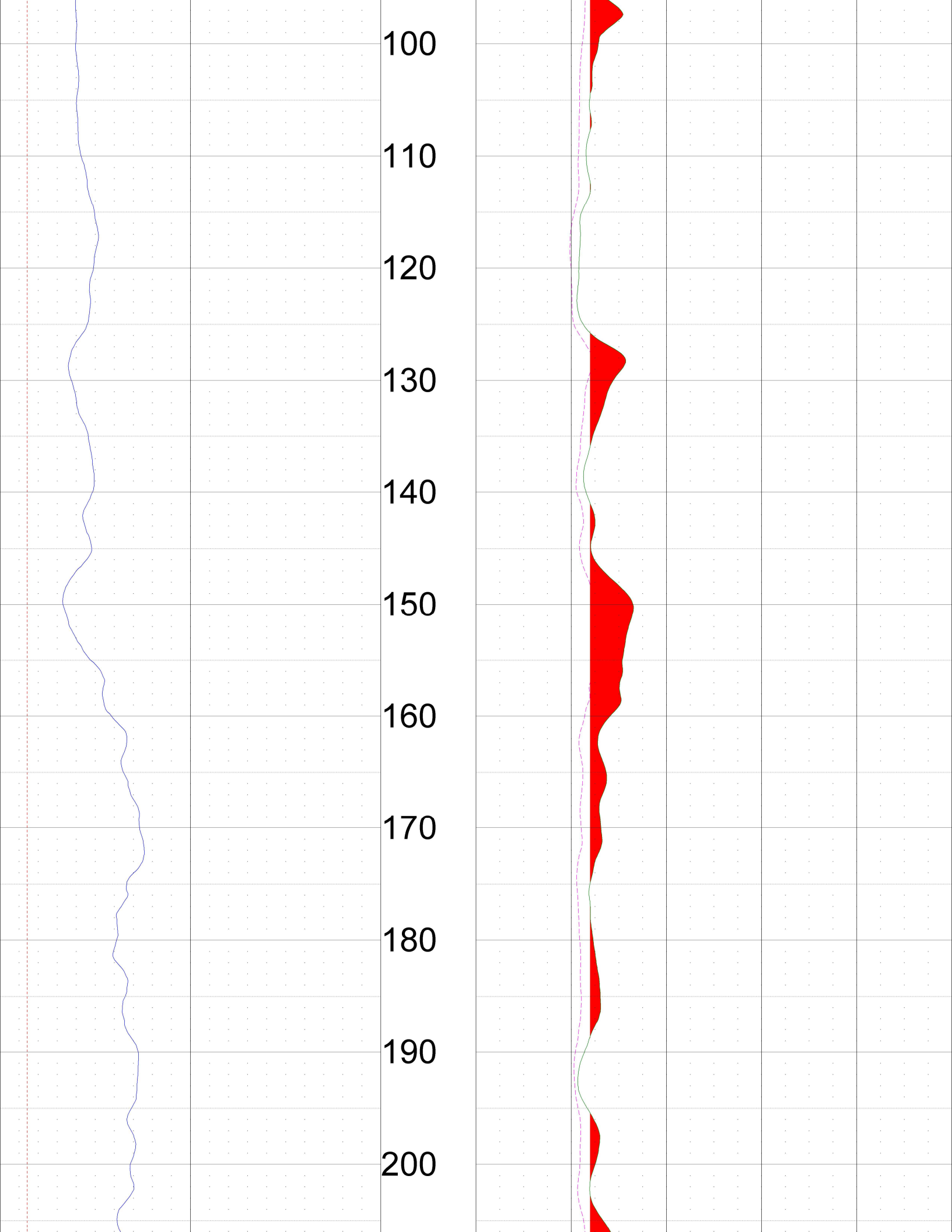
100
110
120
130
140
150
160
170
180
190
200

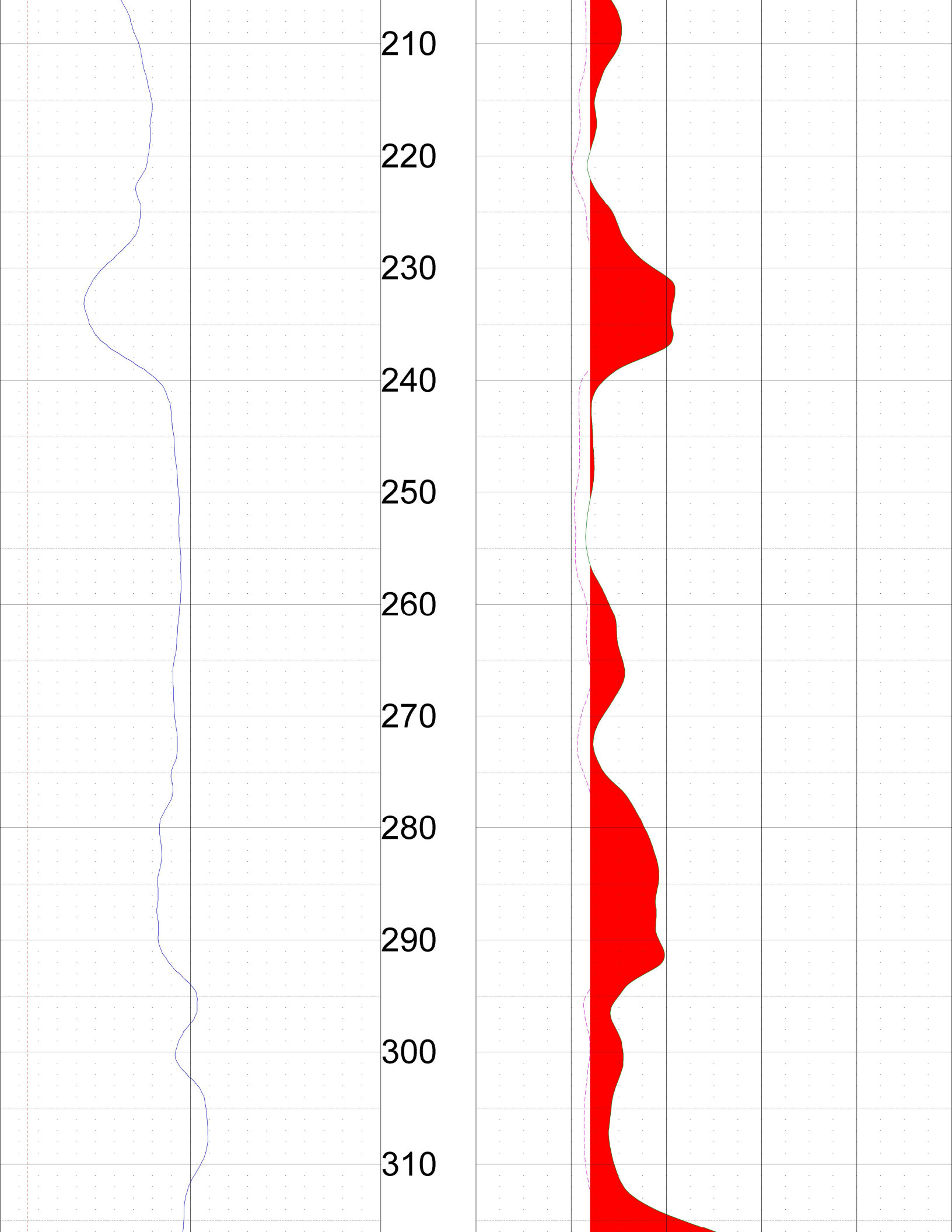
210
220
230
240
250
260
270
280
290
300
310

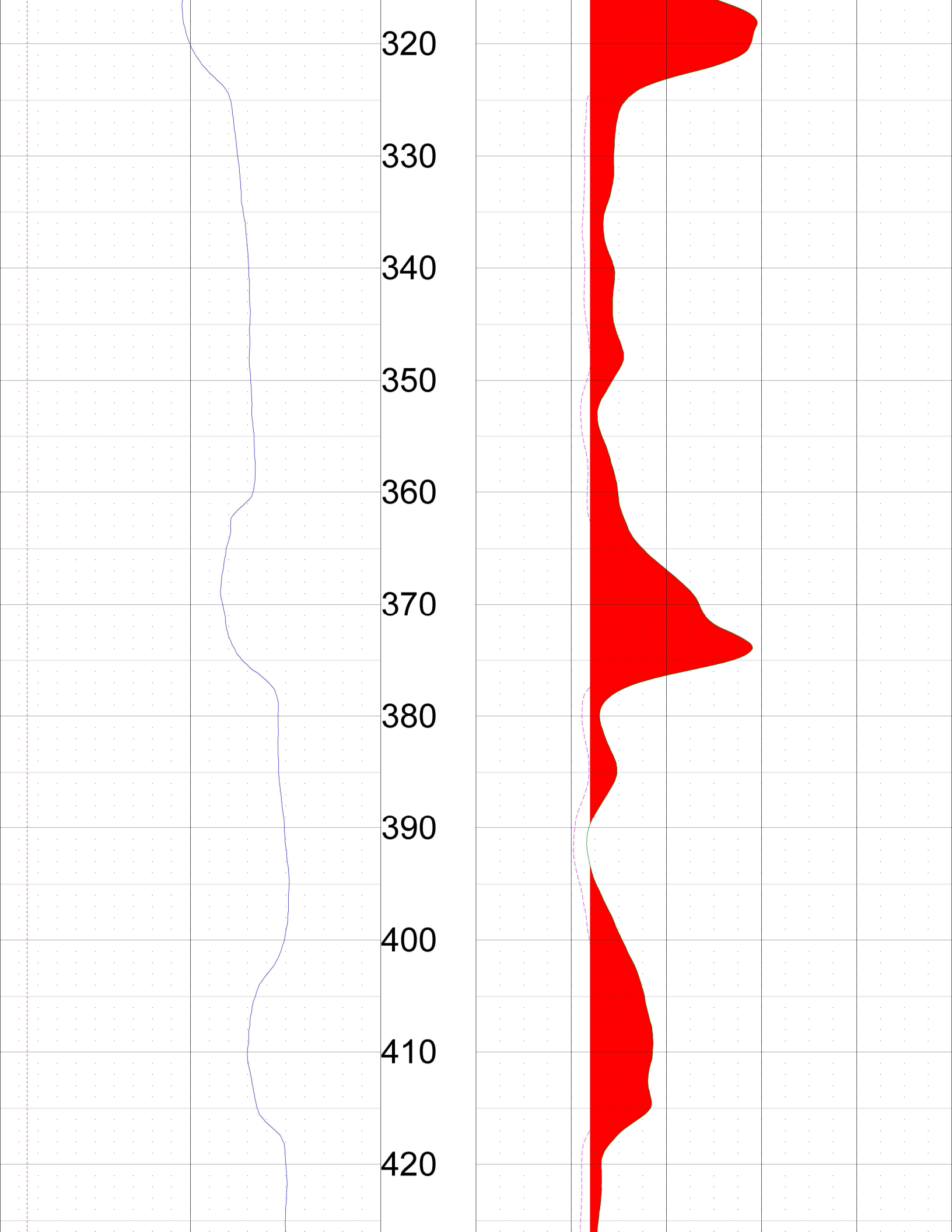
320
330
340
350
360
370
380
390
400
410
420

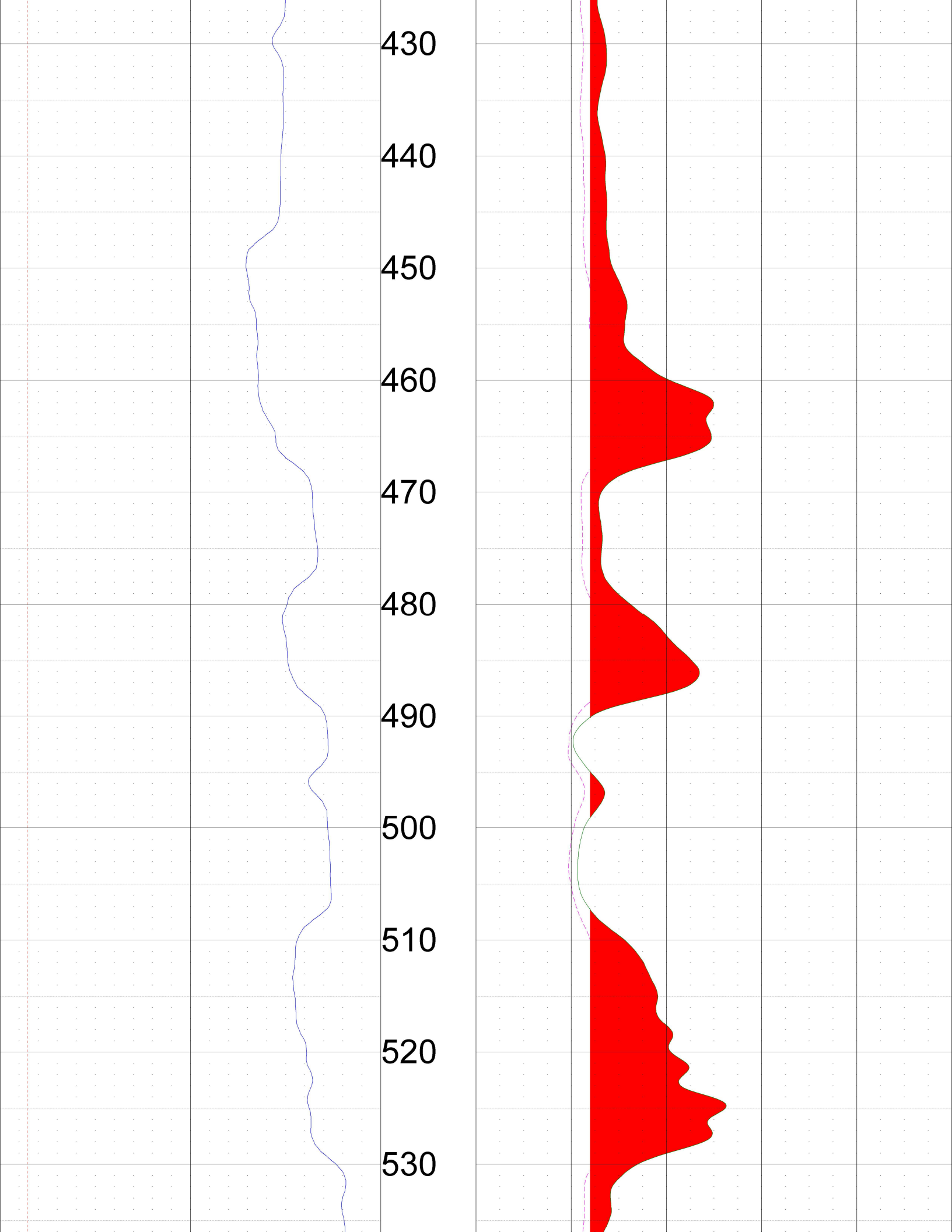
430
440
450
460
470
480
490
500
510
520
530

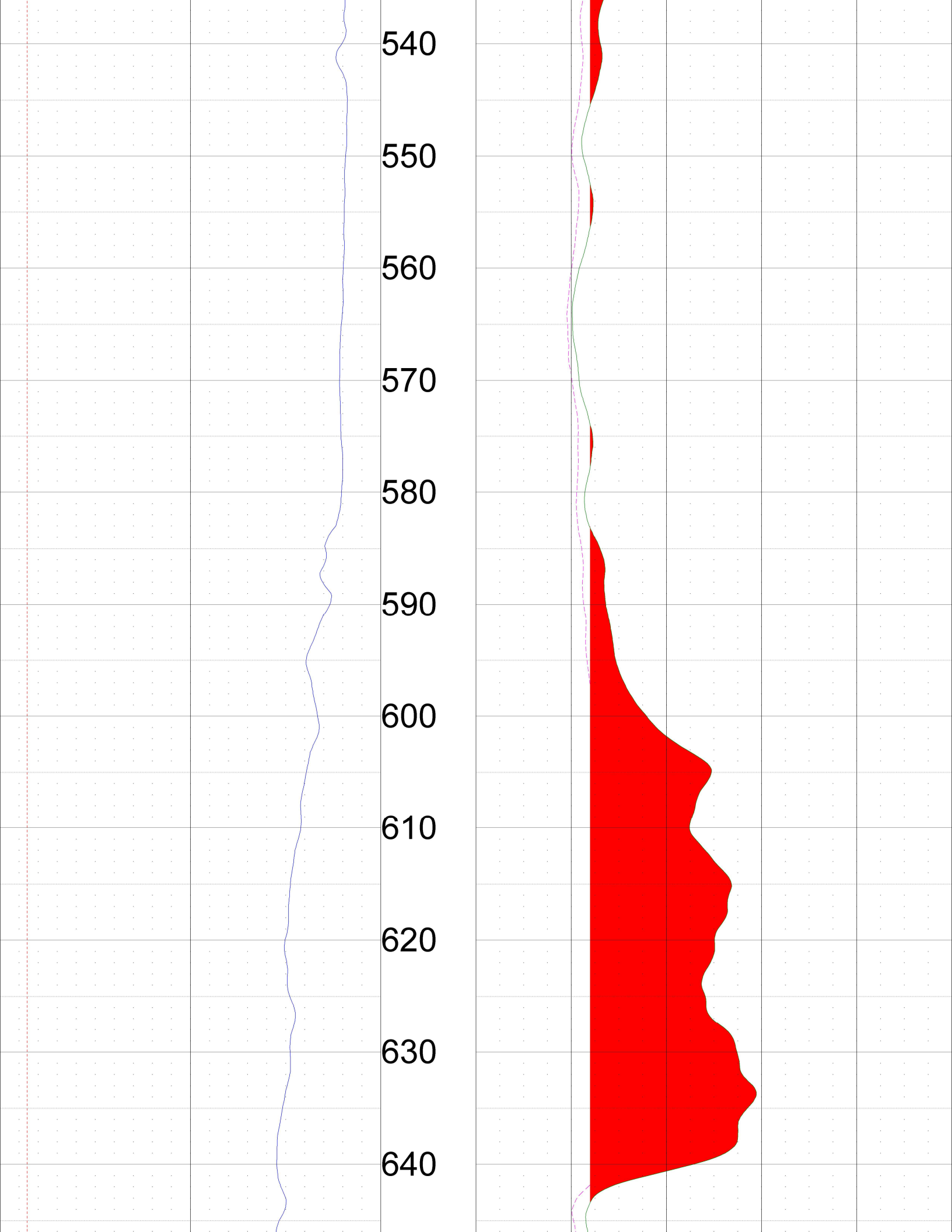
540
550
560
570
580
590
600
610
620
630
640

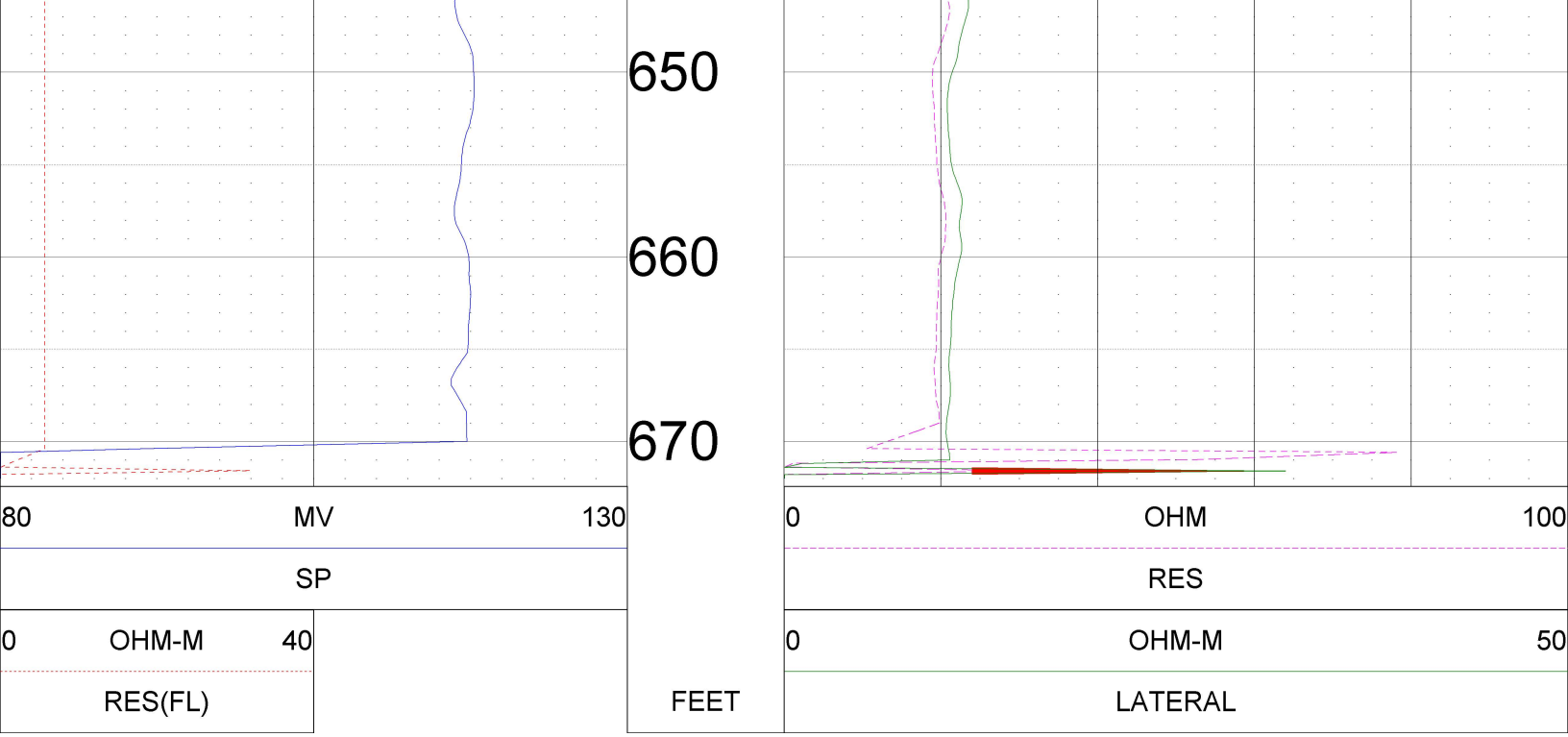
650
660
670
80
MV
130
SP
0
OHM-M
40
RES(FL)
FEET
0
OHM
100
RES
0
OHM-M
50
LATERAL

1825 Yosemite Blvd.
Modesto, CA 95354
(209) 529-4110
Fax (209) 529-5669

Quality M & S Domestic
9/09/2020

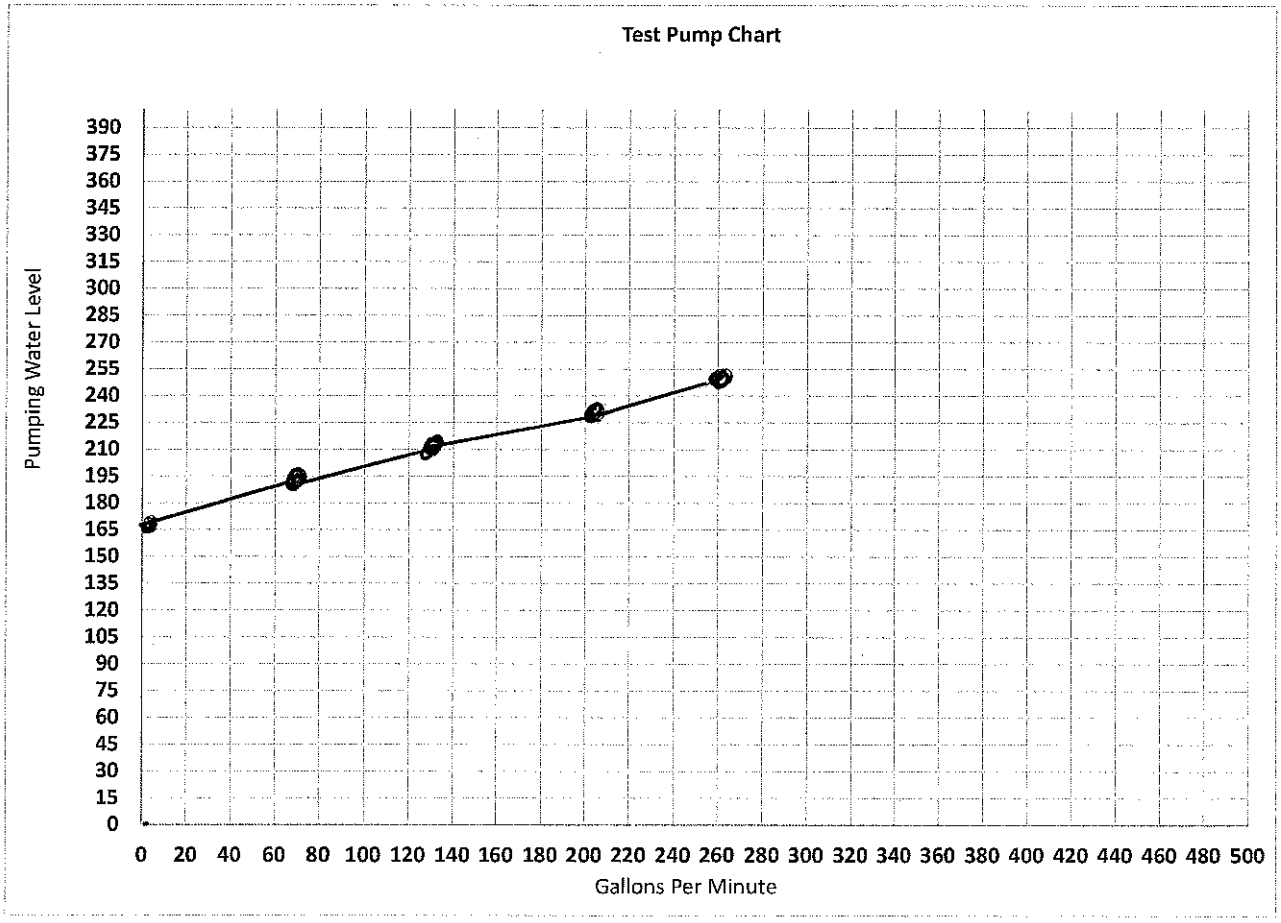

STATIC WATER LEVEL 164'

GPM	PWL	YIELD	NOTES
75	185	3.6	Gallons/Ft.
132	201	3.6	Gallons/Ft.
205	225	3.4	Gallons/Ft.
248	240	3.2	Gallons/Ft.
375	285	3.1	Gallons/Ft.

THOMAS R. WEIMER, PRESIDENT

1825 Yosemite Blvd.
Modesto, CA 95354
(209) 529-4110
Fax (209) 529-5669

Quality M & S Fire Well
9/09/2020

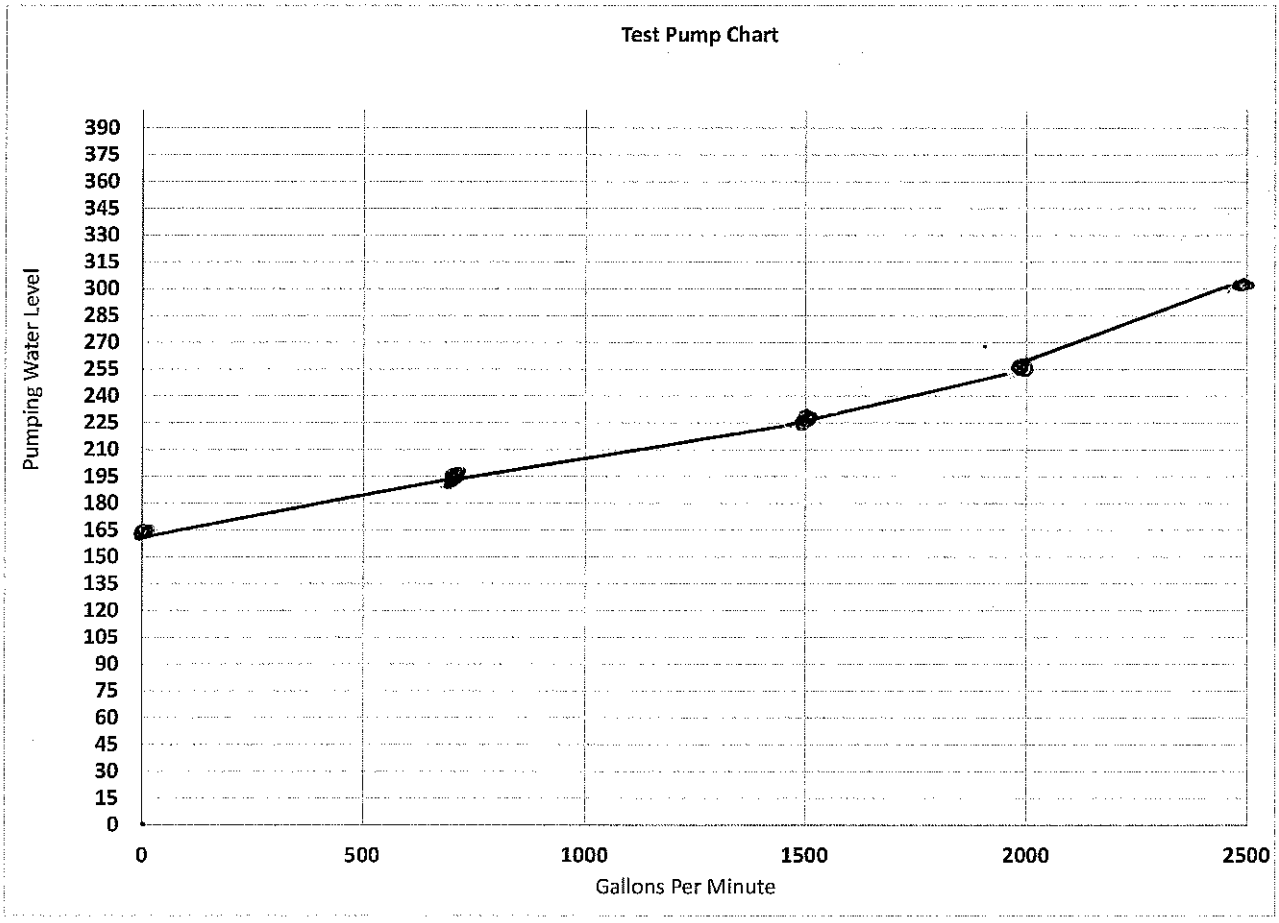

STATIC WATER LEVEL 164'

GPM	PWL	YIELD	NOTES
700	190	27	Gallons/Ft.
1000	205	24	Gallons/Ft.
1500	226	24	Gallons/Ft.
2000	248	23	Gallons/Ft.
2500	295	19	Gallons/Ft.

*** Ran 2000 GPM for 12hrs. @ 248'**

THOMAS R. WEIMER, PRESIDENT

APPENDIX E
Existing Wells and Associated Reports

NORTH

0 500' 1000' 2000'

Scale 1" = 1000'

Z:\2016\A16603\Survey\DWG\EXHIBITS\A16603-WELL-EXHIBIT.dwg 4-04-18 02:00:01 PM kkeller

KIER & WRIGHT
CIVIL ENGINEERS & SURVEYORS, INC.
2850 Collier Canyon Road Phone (925) 245-8788
Livermore, California 94551 Fax (925) 245-8796
www.kierwright.com

WELL LOCATIONS
FOR SCHULTE ROAD PROJECT

TRACY, CALIFORNIA

DATE	MARCH 2018
SCALE	1" = 1000'
BY	KJK
JOB NO.	A16603
SHEET	1 OF 1

*The free Adobe Reader may be used to view and complete this form. However, software must be purchased to complete, save, and reuse a saved form.

File Original with DWR

State of California

Well Completion Report

Refer to Instruction Pamphlet

No. e0358693

Page 1 of 1

Owner's Well Number

Date Work Began 10/23/2017 Date Work Ended 10/31/2017

Local Permit Agency SAN JOAQUIN COUNTY ENVIROMENTAL HEALTH

Permit Number WPOO37341 Permit Date 10/6/17

DWR Use Only – Do Not Fill In

State Well Number/Site Number

N W

Latitude Longitude

APN/TRS/Other

Geologic Log

Orientation ◉ Vertical ○ Horizontal ○ Angle Specify

Drilling Method Air Drilling Drilling Fluid Bentonite mud

Depth from Surface Feet	to Feet	Description Describe material, grain size, color, etc
0	22	BROWN CLAY
22	27	SAND
27	44	BROWN CLAY
44	57	SAND AND GRAVEL
57	147	BROWN CLAY
147	267	BLUE CLAY
267	280	BROWN CLAY
280	294	SAND
294	309	BROWN CLAY
309	314	SAND
314	367	BROWN CLAY
367	373	SAND
373	385	BROWN CLAY
361	363	DIELECTRIC COUPLING

Total Depth of Boring 385 Feet

Total Depth of Completed Well 385 Feet

Well Owner

Name LBA RV COMP. XIX LP

Mailing Address P.O. BOX 847

City CARLSBAD State CA Zip 92018

Well Location

Address 14900 W. SCHULTE RD.

City TRACY County San Joaquin

Latitude Deg. Min. Sec. N Longitude Deg. Min. Sec. W

Datum Dec. Lat. Dec. Long.

APN Book 209 Page 240 Parcel 34

Township Range Section

Location Sketch

(Sketch must be drawn by hand after form is printed.)

North

West East

South

Illustrate or describe distance of well from roads, buildings, fences, rivers, etc. and attach a map. Use additional paper if necessary. **Please be accurate and complete.**

Activity

◉ New Well

○ Modification/Repair

○ Deepen

○ Other

○ Destroy

Describe procedures and materials under "GEOLOGIC LOG"

Planned Uses

◉ Water Supply

☑ Domestic ☑ Public

☐ Irrigation ☐ Industrial

○ Cathodic Protection

○ Dewatering

○ Heat Exchange

○ Injection

○ Monitoring

○ Remediation

○ Sparging

○ Test Well

○ Vapor Extraction

○ Other

Water Level and Yield of Completed Well

Depth to first water (Feet below surface)

Depth to Static Water Level (Feet) Date Measured

Estimated Yield * (GPM) Test Type

Test Length (Hours) Total Drawdown (Feet)

*May not be representative of a well's long term yield.

Casings

Depth from Surface Feet	to Feet	Borehole Diameter (Inches)	Type	Material	Wall Thickness (Inches)	Outside Diameter (Inches)	Screen Type	Slot Size if Any (Inches)
0	20	28	Conductor	HSLA STEEL	1/4	24		
0	363	18	Blank	HSLA STEEL	1/4	8 5/8		
363	375	18	Screen	STAINLESS	1/4	8 5/8	Louver	0.060
375	385	18	Blank	STAINLESS	1/4	8 5/8		

Annular Material

Depth from Surface Feet	to Feet	Fill	Description
0	350	Cement	SANITARY SEAL
350	385	Filter Pack	GRAVEL

Attachments

☐ Geologic Log

☐ Well Construction Diagram

☐ Geophysical Log(s)

☐ Soil/Water Chemical Analyses

☐ Other

Attach additional information, if it exists.

Certification Statement

I, the undersigned, certify that this report is complete and accurate to the best of my knowledge and belief

Name QUALITY WELL DRILLERS
Person, Firm or Corporation

260 AIRPARK RD ATWATER CA 95301
Address City State Zip

Signed Charles L Kol 12-6-2017 468732
C-57 Licensed Water Well Contractor Date Signed C-57 License Number

DWR 188 REV. 1/2006

IF ADDITIONAL SPACE IS NEEDED, USE NEXT CONSECUTIVELY NUMBERED FORM

NOT 1650

*The free Adobe Reader may be used to view and complete this form. However, software must be purchased to complete, save, and reuse a saved form.

File Original with DWR

State of California

Well Completion Report

Refer to Instruction Pamphlet

No. e0358703

Page 1 of 2

Owner's Well Number FIRE WELL

Date Work Began 11/03/2017 Date Work Ended 11/8/2017

Local Permit Agency SAN JOAQUIN COUNTY ENVIRONMENTAL HEALTH

Permit Number WP0037340 Permit Date 10/6/17

DWR Use Only – Do Not Fill In

State Well Number/Site Number

Latitude N Longitude W

APN/TRS/Other

Geologic Log

Orientation ◉ Vertical ○ Horizontal ○ Angle Specify

Drilling Method Air Drilling Drilling Fluid Bentonite mud

Depth from Surface Feet	to Feet	Description Describe material, grain size, color, etc
0	22	BROWN CLAY
22	27	SAND
27	44	BROWN CLAY
44	57	SAND AND GRAVEL
57	149	BROWN CLAY
149	267	BLUE CLAY
267	272	SAND
272	280	BROWN CLAY
280	294	SAND
294	304	BROWN CLAY
304	317	SAND
317	438	BROWN CLAY
438	463	SAND
463	467	BROWN CLAY
467	487	SAND
487	490	BROWN CLAY
490	498	SAND
498	524	BROWN CLAY
524	543	SAND
543	587	BROWN CLAY
587	590	ROCKS
590	602	BROWN CLAY
602	638	SAND
638	646	BROWN CLAY
646	656	SAND
656	660	BROWN CLAY

Total Depth of Boring 660 Feet

Total Depth of Completed Well 660 Feet

Well Owner

Name LBA RV COMP XIX LP / Willie Sevedra

Mailing Address P.O. BOX 847

City CARLSBAD State CA Zip 92018

Well Location

Address 14900 W. SCHULTE RD

City TRACY County San Joaquin

Latitude Deg. Min. Sec. N Longitude Deg. Min. Sec. W

Datum Dec. Lat. Dec. Long.

APN Book 209 Page 240 Parcel 34

Township Range Section

Location Sketch

(Sketch must be drawn by hand after form is printed.)

North / West / East / South

Illustrate or describe distance of well from roads, buildings, fences, rivers, etc. and attach a map. Use additional paper if necessary. Please be accurate and complete.

Activity

◉ New Well

○ Modification/Repair

○ Deepen

○ Other

○ Destroy

Describe procedures and materials under "GEOLOGIC LOG"

Planned Uses

◉ Water Supply

☐ Domestic ☐ Public

☐ Irrigation ☑ Industrial

○ Cathodic Protection

○ Dewatering

○ Heat Exchange

○ Injection

○ Monitoring

○ Remediation

○ Sparging

○ Test Well

○ Vapor Extraction

○ Other

Water Level and Yield of Completed Well

Depth to first water (Feet below surface)

Depth to Static Water Level (Feet) Date Measured

Estimated Yield * (GPM) Test Type

Test Length (Hours) Total Drawdown (Feet)

*May not be representative of a well's long term yield.

Casings

Depth from Surface Feet	to Feet	Borehole Diameter (Inches)	Type	Material	Wall Thickness (Inches)	Outside Diameter (Inches)	Screen Type	Slot Size if Any (Inches)
0	20	30	Conductor	STEEL	1/4	28		
0	170	26	Blank	HSLA STEEL	5/16	16 5/8		
170	450	26	Blank	HSLA STEEL	3/8	16 5/8		
450	490	26	Screen	Stainless Steel	1/4	16 5/8	Louver	0.060
490	520	26	Blank	HSLA STEEL	3/8	16 5/8		
520	535	26	Screen	Stainless Steel	1/4	16 5/8	Louver	0.060

Annular Material

Depth from Surface Feet	to Feet	Fill	Description
0	380	Cement	SANITARY SEAL
380	660	Filter Pack	GRAVEL

Attachments

☐ Geologic Log

☐ Well Construction Diagram

☐ Geophysical Log(s)

☐ Soil/Water Chemical Analyses

☐ Other

Attach additional information, if it exists.

Certification Statement

I, the undersigned, certify that this report is complete and accurate to the best of my knowledge and belief

Name QUALITY WELL DRILLERS
Person, Firm or Corporation

260 AIRPARK RD Address ATWATER City CA State 95301 Zip

Signed C-57 Licensed Water Well Contractor 12/62017 Date Signed 468732 C-57 License Number

DWR 188 REV. 1/2006

IF ADDITIONAL SPACE IS NEEDED, USE NEXT CONSECUTIVELY NUMBERED FORM

...er may be used to view and complete this form. However, software must be purchased to complete, save, and reuse a saved form.

DWR

State of California

Well Completion Report

Refer to Instruction Pamphlet

No. xxxxxxx

DWR Use Only—Do Not Fill In

State Well Number/Site Number

N W

Latitude Longitude

APN/TRS/Other

___ of 2

...Vell Number FIRE WELL

...ork Began ___ Date Work Ended ___

... Permit Agency ___

...rmit Number ___ Permit Date ___

Geologic Log

Orientation ○ Vertical ○ Horizontal ○ Angle Specify ___

Drilling Method ___ Drilling Fluid ___

Depth from Surface Feet	to Feet	Description Describe material, grain size, color, etc.

Total Depth of Boring ___ Feet

Total Depth of Completed Well ___ Feet

Well Owner

Name LBA RV COMP XIX LP

Mailing Address P.O. BOX 847

City CARLSBAD State CA Zip 92018

Well Location

Address 14900 W SCHULTE RD

City TRACY County ___

Latitude ___ Deg. ___ Min. ___ Sec. N Longitude ___ Deg. ___ Min. ___ Sec. W

Datum ___ Dec. Lat. ___ Dec. Long. ___

APN Book ___ Page ___ Parcel ___

Township ___ Range ___ Section ___

Location Sketch

(Sketch must be drawn by hand after form is printed.)

North

West East

South

Illustrate or describe distance of well from roads, buildings, fences, rivers, etc. and attach a map. Use additional paper if necessary. Please be accurate and complete.

Activity

○ New Well
○ Modification/Repair
○ Deepen
○ Other ___
○ Destroy
Describe procedures and materials under "GEOLOGIC LOG"

Planned Uses

○ Water Supply
☐ Domestic ☐ Public
☐ Irrigation ☐ Industrial
○ Cathodic Protection
○ Dewatering
○ Heat Exchange
○ Injection
○ Monitoring
○ Remediation
○ Sparging
○ Test Well
○ Vapor Extraction
○ Other ___

Water Level and Yield of Completed Well

Depth to first water ___ (Feet below surface)

Depth to Static Water Level ___ (Feet) Date Measured ___

Estimated Yield * ___ (GPM) Test Type ___

Test Length ___ (Hours) Total Drawdown ___ (Feet)

*May not be representative of a well's long term yield.

Casings

Depth from Surface Feet	to Feet	Borehole Diameter (Inches)	Type	Material	Wall Thickness (Inches)	Outside Diameter (Inches)	Screen Type	Slot Size If Any (Inches)
535	600	26	Blank	HSLA STEEL	3/8	16 5/8		
600	640	26	Screen	Stainless Steel	1/4	16 5/8	Louver	0.050
640	660	26	Blank	HSLA STEEL	3/8	16 5/8		

Annular Material

Depth from Surface Feet	to Feet	Fill	Description

Attachments

☐ Geologic Log
☐ Well Construction Diagram
☐ Geophysical Log(s)
☐ Soil/Water Chemical Analyses
☐ Other ___

Attach additional information, if it exists.

Certification Statement

I, the undersigned, certify that this report is complete and accurate to the best of my knowledge and belief

Name ___ (Person, Firm or Corporation)

___ (Address) ___ (City) CA (State) ___ (Zip)

Signed ___ (C-57 Licensed Water Well Contractor) Date Signed ___ C-57 License Number ___

IF ADDITIONAL SPACE IS NEEDED, USE NEXT CONSECUTIVELY NUMBERED FORM

DWR 188 REV. 1/2008

Well Test Report

Job No.# 172003 Job Name MILLIE SEVERSON INC.
Description: DESKTOP WELL / TEST STEP -
Location: Operator: DEREK Date: 12-6-17
Water Level Reference Point:
Static Water Level (ft.): 158.0 Pump Setting Depth (ft.): 360'
Start Time: 8:00 192.1 Comments: 8" Domestic Well
STOP: 4:30 200.0 PPM:

Time	Minute	Enigine/ Pump RPM	Q (GPM)	PWL (ft.)	Totalizer	Sand (cc)	Discharge Descriptions
	NO SURGE						
8:00		2000	120	158.0		NO	CLOUDY / CLEAR
:20		2000	120	240.0		↑	CLEAR
:40		2000	120	244.0		↓	CLEAR
9:00		2000	120	245.3		NO	CLEAR
	30 min. RECOVERY — 163.1						CLEAR
START TEST → 10 GPM 4 HRS. 9:30		2000	40	227.8		NO	CLEAR / CLEAN
10:00		2000	40	233.5		↑	↑
:30		2000	40	242.5		↕	↕
11:00		2000	40	244.6		↓	↓
:30		2000	40	247.9	PPM - 894	NO	CLEAR / CLEAN
12:00		30 min. RECOVERY —			168.1		
START TEST → 12:00				~~229.7~~		NO	CLEAR / CLEAN
:30		2000	80	229.1		↑	↑
1:00		2000	80	249.0		↕	↕
:30		2000	80	249.11		↓	↓
2:00		2000	80	251.4	PPM - 907	NO	CLEAR / CLEAN
:30		30 min. RECOVERY — 171.4					
START TEST → :30		2000	120	251.4		NO	CLEAR / CLEAN
3:00		2000	120	253.0		↑	↑
:30		2000	120	254.1		↕	↕
4:00		2000	120	254.6		↓	↓
:30	NO SURGE	2000	120	254.11		NO	CLEAR / CLEAN
		30 min. RECOVERY - 172.0			PPM - 905		

Well Test Report

Job No.# 172003 Job Name Millie Stevenson
Description: Develop well Constant Flow Test
Location: Operator: Derek Date: 12-7-17
Water Level Reference Point:
Static Water Level (ft.): 158.3 Pump Setting Depth (ft.): 360'
Start Time: 8:45 200.0 Comments: 8" Domestic well
Stop: 7:30 210.0 PPM:

Time	Minute	Enigine/ Pump RPM	Q (GPM)	PWL (ft.)	Totalizer	Sand (cc)	Discharge Descriptions
	Surge						
8:45	NONE	2000	80	158.3		NO	clear / clear
9:00		2000	80	206.4			
:20				210.3			
:40				214.9			
10:00				217.0			
:20				219.1			
:40				219.11			
11:00				220.10			
:20				221.1			
:40				221.8			
12:00				222.0			
:20				222.5			
:40				222.5			
1:00	NONE	2000	80	223.6	ppm-924	NO	clear / clear
:20				223.0			
:40				223.0			
2:00				223.0			
:20				223.0			
:40			80	223.3		NO	clear / clear
3:00	NONE	2000	80	223.6			
				[illegible]			
	30 min Recovery =						
	got water samples at 12:35						
3:20	NONE	2000	80	2234		NO	
:40				223.6			clear / clear
4:00				223.9			
:20				223.10			
:40				223.10			
5:00				224.0			
:20				223.10			
:40				224.0			
6:00				224.0			
:20				224.0			
:40				224.2			
7:00	NONE	2000	80	224.0	ppm-970	NO	clear / clear
	30 min. Recovery =			170.0			

ORIGINAL
File with DWR

Page 1 of 1

STATE OF CALIFORNIA
WELL COMPLETION REPORT
Refer to Instruction Pamphlet

Owner's Well No. Schulte Rd Irrigation well No. 1086577
Date Work Began 7-26-07, Ended 9-12-07
Local Permit Agency San Joaquin County
Permit No. SR0051390 Permit Date 7-24-07

DWR USE ONLY — DO NOT FILL IN
02S04E35S
STATE WELL NO./STATION NO.
LATITUDE LONGITUDE
APN/TRS/OTHER

GEOLOGIC LOG

ORIENTATION (✓) ✓ VERTICAL ___ HORIZONTAL ___ ANGLE ___ (SPECIFY)
DRILLING METHOD Reverse Rotary FLUID Bentonite

DEPTH FROM SURFACE Ft. to Ft.	DESCRIPTION *Describe material, grain size, color, etc.*
0 150	Sandy Clay
150 160	Clayey Sand
160 380	Sandy Clay
380 400	Clayey Sand
400 440	Sandy Clay
440 470	Sand little clay
470 500	Sandy Clay
500 530	Sand little clay
530 550	Sandy Clay
550 570	Sand little clay
570 580	Sandy Clay
580 600	Sand little clay
600 620	Clay

NOTE: 3inch LCS Sch 40 gravel tube @ 355ft

TOTAL DEPTH OF BORING 620 (Feet)
TOTAL DEPTH OF COMPLETED WELL 610 (Feet)

WELL OWNER
Name City of Tracy
Mailing Address 520 Tracy Blvd
City Tracy State Ca. ZIP 95376

WELL LOCATION
Address 15179 W. Schulte Rd
City Tracy
County San Joaquin
APN Book 209 Page 230 Parcel 03
Township 2S Range 4E Section 35
Lat 37 DEG. 43 MIN. 16.3 SEC. N Long 121 DEG. 29 MIN. 56 SEC. W

LOCATION SKETCH

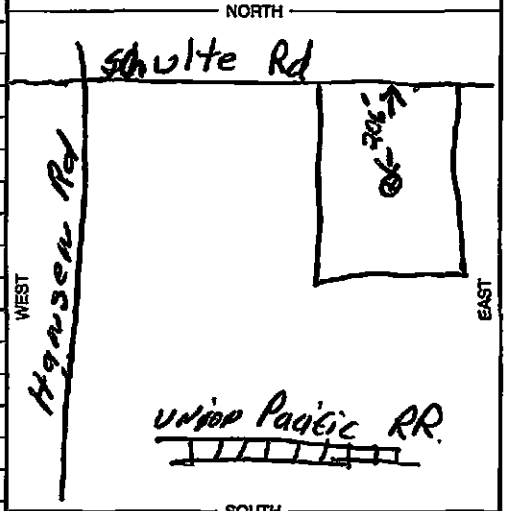

Illustrate or Describe Distance of Well from Roads, Buildings, Fences, Rivers, etc. and attach a map. Use additional paper if necessary. PLEASE BE ACCURATE & COMPLETE.

ACTIVITY (✓)
✓ NEW WELL
MODIFICATION/REPAIR
___ Deepen
___ Other (Specify)
___ DESTROY *(Describe Procedures and Materials Under "GEOLOGIC LOG")*

USES (✓)
WATER SUPPLY
___ Domestic ___ Public
✓ Irrigation ___ Industrial
___ MONITORING
___ TEST WELL
___ CATHODIC PROTECTION
___ HEAT EXCHANGE
___ DIRECT PUSH
___ INJECTION
___ VAPOR EXTRACTION
___ SPARGING
___ REMEDIATION
___ OTHER (SPECIFY)

WATER LEVEL & YIELD OF COMPLETED WELL
DEPTH TO FIRST WATER NA (Ft.) BELOW SURFACE
DEPTH OF STATIC WATER LEVEL 182.5 (Ft.) & DATE MEASURED 9-12-07
ESTIMATED YIELD * 1000 (GPM) & TEST TYPE Constant Rate
TEST LENGTH 9 (Hrs.) TOTAL DRAWDOWN 48 (Ft.)
** May not be representative of a well's long-term yield.*

DEPTH FROM SURFACE Ft. to Ft.	BORE-HOLE DIA. (Inches)	CASING (S) TYPE (✓) BLANK	SCREEN	CONDUCTOR	FILL PIPE	MATERIAL / GRADE	INTERNAL DIAMETER (Inches)	GAUGE OR WALL THICKNESS	SLOT SIZE IF ANY (Inches)
0 50	42			✓		ASTM A139 GrB	30" OD	.375	
0 610	26	✓				A53 Gr B	15 3/8	.312	
440 470	26		✓			LCS WW	15	XX 40	.050
500 530	26		✓			LCS WW	15	XX 40	.050
550 600	26		✓			LCS WW	15	XX 40	.050
0 430	26	✓				LCS	2	Sch 40	Sawcut 1/16

DEPTH FROM SURFACE Ft. to Ft.	ANNULAR MATERIAL TYPE CEMENT (✓)	BENTONITE (✓)	FILL (✓)	FILTER PACK (TYPE/SIZE)
0 100	✓			
100 340			✓	3/8 pea gravel
340 350		✓		
350 410			✓	3/8 pea gravel
410 610			✓	SRI #8
610 620		✓		

ATTACHMENTS (✓)
___ Geologic Log
___ Well Construction Diagram
___ Geophysical Log(s)
___ Soil/Water Chemical Analyses
___ Other
ATTACH ADDITIONAL INFORMATION, IF IT EXISTS.

CERTIFICATION STATEMENT
I, the undersigned, certify that this report is complete and accurate to the best of my knowledge and belief.
NAME Robert J Zimmerman Zim Industries Inc.
(PERSON, FIRM, OR CORPORATION) (TYPED OR PRINTED)
4545 E. Lincoln Ave Fresno Ca 93725
ADDRESS CITY STATE ZIP
Signed Robert J Zimmerman 10-12-07 440537
C-57 LICENSED WATER WELL CONTRACTOR DATE SIGNED C-57 LICENSE NUMBER

DWR 188 REV. 05-03 IF ADDITIONAL SPACE IS NEEDED, USE NEXT CONSECUTIVELY NUMBERED FORM OSP 03 78836

ORIGINAL
File with DWR

STATE OF CALIFORNIA
THE RESOURCES AGENCY
DEPARTMENT OF WATER RESOURCES

WATER WELL DRILLERS REPORT

Do not fill in

No. 344908

Notice of Intent No. ______
Local Permit No. or Date 90-794

209-240-024

State Well No. ______
Other Well No. 02S04E36F

(1) OWNER: Name Owens Illinois
Address 14700 W. Schulte
City Tracy, Ca ZIP 95376-0030

(2) LOCATION OF WELL (See instructions):
County San Joaquin Owner's Well Number ______
Well address if different from above ______
Township 02S Range 04E Section 36 D/C
Distance from cities, roads, railroads, fences, etc. ½ Mi. West of Lammers Rd. north side

WELL LOCATION SKETCH

(3) TYPE OF WORK:
New Well [X] Deepening [ ]
Reconstruction [ ]
Reconditioning [ ]
Horizontal Well [ ]
Destruction [ ] (Describe destruction materials and procedures in Item 12)

(4) PROPOSED USE:
Domestic [ ]
Irrigation [ ]
Industrial [X]
Test Well [ ]
Municipal [ ]
Other [ ] (Describe)

(5) EQUIPMENT:
Rotary [ ] Reverse [X]
Cable [ ] Air [ ]
Other [ ] Bucket [ ]

(6) GRAVEL PACK:
Yes [X] No [ ] Size roofing
Diameter of bore 26"
Packed from 350 to 535 ft.

(7) CASING INSTALLED:
Steel [X] Plastic [ ] Concrete [ ]

(8) PERFORATIONS:
Type of perforation or size of screen

From ft.	To ft.	Dia. in.	Gage or Wall	From ft.	To ft.	Slot size
0	535	16	¼"	440	470	ful flo
				470	500	reg.perf.
				500	530	ful flo

(9) WELL SEAL:
Was surface sanitary seal provided? Yes [X] No [ ] If yes, to depth 350 ft.
Were strata sealed against pollution? Yes [ ] No [ ] Interval ______ ft.
Method of sealing 0-250' CEMENT/250-350' HOLE PLUG & BENTONITE

(10) WATER LEVELS:
Depth of first water, if known ______ ft.
Standing level after well completion 167 ft.

(11) WELL TESTS:
Was well test made? Yes [X] No [ ] If yes, by whom? HENNINGS
Type of test Pump [X] Bailer [ ] Air lift [ ]
Depth to water at start of test ______ ft. At end of test ______ ft.
Discharge ______ gal/min after ______ hours Water temperature ______
SEE ATTACHED
Chemical analysis made? Yes [X] No [ ] If yes, by whom? ______
Was electric log made Yes [ ] No [X] If yes, attach copy to this report

(12) WELL LOG: Total depth 575 ft. Completed depth 535 ft.

from ft.	to ft.	Formation (Describe by color, character, size or material)
0	11	Clay
11	19	Sand
19	25	Clay
25	34	Sand
34	35	Clay
35	36	Gravel
36	139	Clay
139	140	Gravel
140	149	Clay
149	150	Gravel
150	163	Clay
163	173	Sand & Gravel
173	185	Clay
185	192	Sand & Gravel
192	267	Clay
267	298	Gravel
298	322	Clay
322	331	Gravel
331	334	Clay
334	337	Gravel
337	352	Clay
352	356	Gravel
356	386	Clay
386	389	Gravel
389	441	Clay
441	452	Gravel
452	475	Clay
475	478	Gravel
478	479	Clay
479	486	Gravel
486	502	Clay
502	510	Gravel
510	512	Clay
512	525	Gravel
525	575	Clay

Work started Apr. 26 1990 Completed May 16 1990

WELL DRILLER'S STATEMENT:
This well was drilled under my jurisdiction and this report is true to the best of my knowledge and belief.

Signed [signature] (Well Driller)
NAME HENNINGS BROS. DRILLING CO., INC.
(Person, firm, or corporation) (Typed or printed)
Address 3525 PELANDALE AVE.
City MODESTO, CA ZIP 95356
License No. 290813 Date of this report JUNE 26, 1990

IF ADDITIONAL SPACE IS NEEDED, USE NEXT CONSECUTIVELY NUMBERED FORM

DWR 188 (REV. 12-86) 86 96355

CONFIDENTIAL
NOT FOR PUBLIC USE
WATER CODE 13752

344908

02S04E36 [illegible]

209-240-024

MAY 16, 1990

WELL TEST

RPM	GPM	PWL
1750	2785	280'
1500	2168	262'
1300	1444	250'
1200	1000	225'

STANDING WATER 167'

STATIC WATER 187'

ORIGINAL
File with DWR

STATE OF CALIFORNIA
THE RESOURCES AGENCY
DEPARTMENT OF WATER RESOURCES

WATER WELL DRILLERS REPORT

Do not fill in

No. 256595

Notice of Intent No. _____
Local Permit No. or Date _____

209-240-025

State Well No. _____
Other Well No. 02S04E36E

(1) OWNER: Name Nutting/Rice Partnership
Address One Webster's Landing
City Syracuse, New York ZIP 13202

(2) LOCATION OF WELL (See instructions):
County San Joaquin Owner's Well Number _____
Well address if different from above _____
Township 2S Range 4E Section 31
Distance from cities, roads, railroads, fences, etc.
14700 West Schult Road
Tracy, California 95376

WELL LOCATION SKETCH

(3) TYPE OF WORK:
New Well ☒ Deepening ☐
Reconstruction ☐
Reconditioning ☐
Horizontal Well ☐
Destruction ☐ (Describe destruction materials and procedures in Item 12)

(4) PROPOSED USE:
Domestic ☐
Irrigation ☐
Industrial ☒
Test Well ☐
Municipal ☐
Other ☐
(Describe)

(5) EQUIPMENT:
Rotary ☐ Reverse ☒
Cable ☐ Air ☐
Other ☐ Bucket ☐

(6) GRAVEL PACK:
Yes ☒ No ☐ Size "21"
Diameter of bore 20"
Packed from 100 to 400 ft.

(7) CASING INSTALLED:
Steel ☒ Plastic ☐ Concrete ☐

(8) PERFORATIONS:
Type of perforation or size of screen

From ft.	To ft.	Dia. in.	Gage or Wall	From ft.	To ft.	Slot size
~~300~~	~~400~~	~~10~~	~~3/4"~~	300	400	
+1	400	10	3/4"	RM Louvered		
			.188			

(9) WELL SEAL:
Was surface sanitary seal provided? Yes ☒ No ☐ If yes, to depth 100 ft.
Were strata sealed against pollution? Yes ☐ No ☒ Interval _____ ft.
Method of sealing Cement Grout

(10) WATER LEVELS:
Depth of first water, if known 12 ft.
Standing level after well completion _____ ft.

(11) WELL TESTS:
Was well test made? Yes ☐ No ☐ If yes, by whom? _____
Type of test Pump ☐ Bailer ☐ Air lift ☐
Depth to water at start of test _____ ft. At end of test _____ ft.
Discharge _____ gal/min after _____ hours Water temperature _____
Chemical analysis made? Yes ☐ No ☒ If yes, by whom? _____
Was electric log made Yes ☐ No ☒ If yes, attach copy to this report

(12) WELL LOG: Total depth 400 ft. Completed depth 405 ft.

from ft.	to ft.	Formation (Describe by color, character, size or material)
0	12	Sandy Fill
12	29	Clay
29	33	Sand
33	45	Clay
45	47	Sand
47	49	Clay
49	56	Sand
56	61	Clay
61	70	Sand
70	90	Clay
90	94	Sand
94	98	Clay
98	102	Sand
102	115	Clay
115	130	Sand
130	134	Sand
134	140	Sand
140	145	Clay
145	147	Sand
147	176	~~XXXX~~ Clay
176	181	Sand
181	190	Hard Pan
190	205	Sand
205	215	Clay
215	222	Sand
222	230	Hard Pan
230	245	Sandy Hard Pan
245	251	Sand
251	267	Clay
267	275	Sand
275	287	Clay
287	298	Gravel
298	310	Clay
310	312	Sand
312	316	Clay
316	319	Sand
319	324	Clay
324	329	Gravel
329	335	Clay
335	337	Sandy Gravel

Work started 5/8 1990 Completed 6/18 1990

WELL DRILLER'S STATEMENT:
This well was drilled under my jurisdiction and this report is true to the best of my knowledge and belief.

Signed [signature] (Well Driller)
NAME Clark Well, Inc.
(Person, firm, or corporation) (Typed or printed)
Address 2024 East Charter Way
City Stockton, CA ZIP 95205
License No. 371560 Date of this report 6/30/90

CONFIDENTIAL
NOT FOR PUBLIC USE
WATER CODE SEC. 13752

DWR 188 (REV. 12-86)
IF ADDITIONAL SPACE IS NEEDED, USE NEXT CONSECUTIVELY NUMBERED FORM
86 96355

STATE OF CALIFORNIA
THE RESOURCES AGENCY
DEPARTMENT OF WATER RESOURCES

WATER WELL DRILLERS REPORT

ORIGINAL
File with DWR

Do not fill in

No. 256595 p.2

Notice of Intent No. _____
Local Permit No. or Date _____ 209-240-025

State Well No. _____
Other Well No. 025046E36E

(1) OWNER: Name Nutting/Rice Partnership
Address One Webster's Landing
City Syracuse, New York ZIP 13202

(2) LOCATION OF WELL (See instructions):
County _____ Owner's Well Number _____
Well address if different from above _____
Township _____ Range _____ Section _____
Distance from cities, roads, railroads, fences, etc. _____

WELL LOCATION SKETCH

(3) TYPE OF WORK:
New Well ☐ Deepening ☐
Reconstruction ☐
Reconditioning ☐
Horizontal Well ☐
Destruction ☐ (Describe destruction materials and procedures in Item 12)

(4) PROPOSED USE:
Domestic ☑
Irrigation ☐
Industrial ☐
Test Well ☐
Municipal ☐
Other ☐
(Describe)

(5) EQUIPMENT:
Rotary ☐ Reverse ☐
Cable ☐ Air ☐
Other ☐ Bucket ☐

(6) GRAVEL PACK:
Yes ☐ No ☑ Size: _____
Diameter of bore _____
Packed from _____ to _____ ft.

(7) CASING INSTALLED:
Steel ☐ Plastic ☐ Concrete ☐

From ft.	To ft.	Dia. in.	Gage or Wall

(8) PERFORATIONS:
Type of perforation or size of screen

From ft.	To ft.	Slot size

(9) WELL SEAL:
Was surface sanitary seal provided? Yes ☐ No ☐ If yes, to depth _____ ft.
Were strata sealed against pollution? Yes ☐ No ☐ Interval _____ ft.
Method of sealing _____

(10) WATER LEVELS:
Depth of first water, if known _____ ft.
Standing level after well completion _____ ft.

(11) WELL TESTS:
Was well test made? Yes ☐ No ☐ If yes, by whom? _____
Type of test Pump ☐ Bailer ☐ Air lift ☐
Depth to water at start of test _____ ft. At end of test _____ ft.
Discharge _____ gal/min after _____ hours Water temperature _____
Chemical analysis made? Yes ☐ No ☐ If yes, by whom? _____
Was electric log made Yes ☐ No ☐ If yes, attach copy to this report

(12) WELL LOG: Total depth 400 ft. Completed depth 405 ft.

from ft.	to ft.	Formation (Describe by color, character, size or material)
337	340	Hard Pan
340	350	Sandy Hard Pan
350	365	Clay
365	370	Sand
370	384	Hard Pan
384	405	Pea Gravel

Work started _____ 19__ Completed _____ 19__

WELL DRILLER'S STATEMENT:
This well was drilled under my jurisdiction and this report is true to the best of my knowledge and belief.
Signed _____ (Well Driller)
NAME Clark Well, Inc. (Person, firm or corporation) (Typed or printed)
Address 2024 East Charter Way
City Stockton, California ZIP 95205
License No. 371560 Date of this report 6/30/90

VOID
INITIAL
NOT FOR PUBLIC USE
WATER CODE SEC. 13752

DWR 188 (REV. 12-86) IF ADDITIONAL SPACE IS NEEDED, USE NEXT CONSECUTIVELY NUMBERED FORM 86 96355

PLOT PLAN
(Draw To Scale)

256595
02S04E36
209-240-025

SCALE _____" TO_____

1. Names of streets or roads nearest to or bounding the property.
2. Outline of the property, giving dimensions and North direction.
3. Dimensioned outlines and locations of all existing and proposed structures, including covered areas such as patios, driveways and walks.
4. Location of house sewer outlet, public sewer, sewage disposal system or proposed sewage disposal system, proposed expansion of sewage disposal system, or any other possible source of contamination.
5. Location of other wells within radius of 150 feet on the property or adjoining property.
6. Location of sewage disposal system on adjoining property or within a radius of 150 feet.

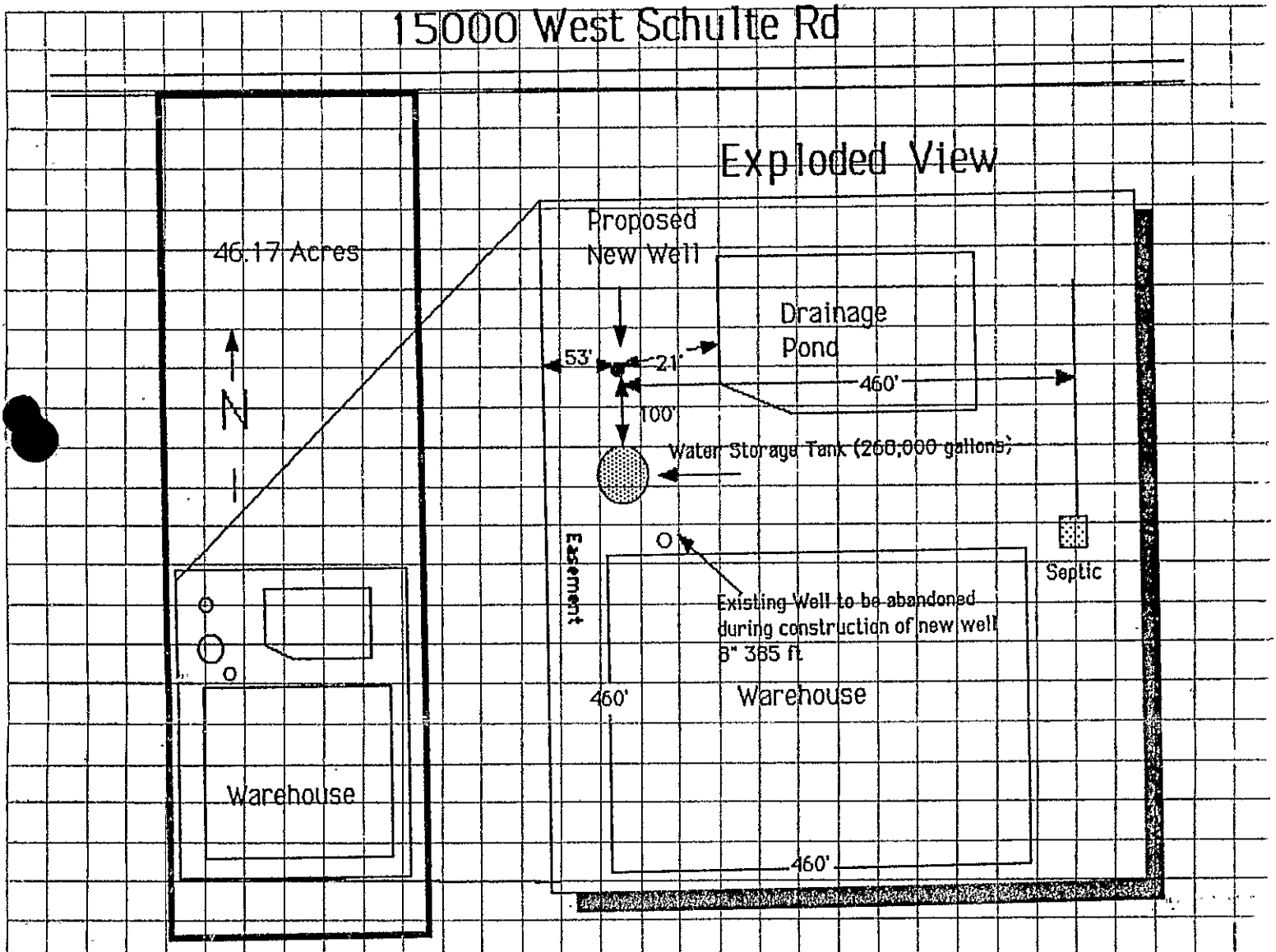

New Well is being drilled to add to existing well. The purpose of the wells are to provide fill water to the 268,000 gallon water tank which is the water supply for the fire sprinkler protection system. The existing well does not provide 330 gpm which the fire marshal requires.

Geotechnical Investigation

WELL/PUMP PERMIT

SAN JOAQUIN COUNTY PUBLIC HEALTH SERVICES ENVIRONMENTAL HEALTH DIVISION
304 E. WEBER AVE, THIRD FLOOR STOCKTON CA 95202 (209) 468-3420

14950 W. SCHULTE NON-REFUNDABLE PERMIT EXPIRES 1 YEAR FROM DATE ISSUED 209-240-32

JOB ADDRESS ~~26977 South Lammers Road~~ APN ~~209-24-11~~ (see map)

2-00

CITY/ZIP Tracy, CA 95370 PARCEL SIZE 40 acres

OWNER NAME GWF Power Systems ADDRESS 4300 Railroad Avenue

CITY/ZIP Pittsburg 94565 PHONE (925) 431-1182

CONTRACTOR Pitcher Drilling Co. ADDRESS c/o Hultgren-Tillis Engineers 2520 Stanwell Drive, Suite 100

CITY/ZIP Concord, CA 94520 PHONE (925) 685-6300 C-57 LICENSE# 263085 EXP DATE 9/30/03

GEOGRAPHICAL INFORMATION: COORDINATES X ___ Y ___ TOWNSHIP 25 RANGE 4E SECTION 36

TYPE OF WELL: ☐ NEW WELL ☐ REPLACEMENT WELL ☐ MONITORING WELL # ___ XX OTHER Borings

INSTALLATION: ☐ WELL SYSTEM REPAIR ☐ CROSS-CONNECT REPAIR ☐ VAPOR EXTRACTION WELL # ___

TYPE OF PUMP: ☐ NEW ☐ REPAIR H.P. ___ DEPTH PUMP SET ___ FT. FIRST WATER LEVEL ___

☐ OUT-OF-SERVICE WELL ☐ GEOTECHNICAL # ___ ☐ SOIL BORING 5 & CPT ☐ DESTRUCTION: ___

TIM & TOM

INTENDED USE Geotechnical TYPE OF WELL CONSTRUCTION SPECIFICATION

☐ INDUSTRIAL ☐ OPEN BOTTOM Boring WELL EXCAVATION DIA 4.5" CONDUCTOR CASING DIA ___

☐ DOMESTIC PRIVATE ☐ GRAVEL PACK/SIZE ___ WELL CASING TYPE ___ WELL CASING DIA ___

☐ PUBLIC/MUNICIPAL ☐ DRIVEN GROUT SEAL DEPTH ___ SPECIFICATION ___

☐ IRRIGATION/AG OTHER GROUT BRAND NAME neat cement grout

☐ MONITORING GROUT SEAL PUMPED: ☐ YES ☐ NO

☐ CHRISTY BOX ☐ STOVE PIPE CONCRETE PEDESTAL BY DRILLER: ☐ YES ☐ NO

PAYMENT RECEIVED SEP 1 - 2001 SAN JOAQUIN COUNTY PUBLIC HEALTH SERVICES ENVIRONMENTAL HEALTH DIVISION

APPROXIMATE WELL DEPTH 40'-80'

PROPOSED CONSTRUCTION/DRILLING METHOD: MUD ROTARY X AIR ROTARY ___ AUGER ___ CABLE ___ OTHER ___

I HEREBY CERTIFY THAT I HAVE PREPARED THIS APPLICATION AND THAT THE WORK WILL BE DONE IN ACCORDANCE WITH SAN JOAQUIN COUNTY ORDINANCES, STATE LAWS, AND RULES AND REGULATIONS. I ALSO CERTIFY THAT MY C-57 LICENSE IS CURRENT AND ACTIVE WITH THE CALIFORNIA CONTRACTORS STATE LICENSE BOARD AND THAT I AM IN COMPLIANCE WITH ALL WORKMAN'S COMPENSATION LAWS.

R. Hu[illegible] for MINIMUM 24 HOUR ADVANCE NOTICE REQUIRED FOR INSPECTIONS

SIGNED Richard H. Lake -see attached- TITLE President DATE 9/10/01

14950 W. SCHULTE RD.

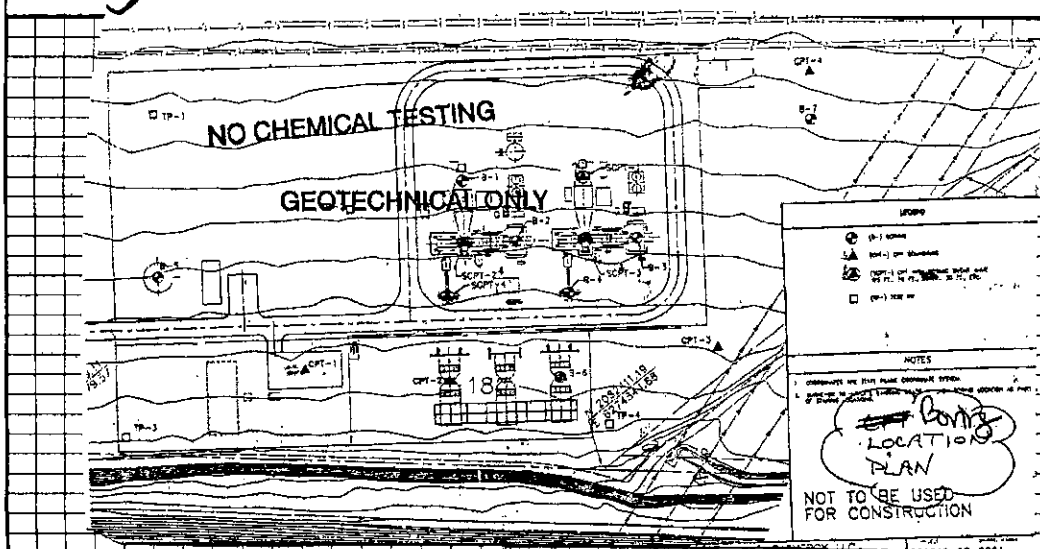

DEPARTMENT USE ONLY

Application Accepted By Rhoda A. Turbatt Date 9/13/01 Area 216 EMPID# 7380

Grout Inspection By ___ Date ___ Pump Inspected By ___ Date ___

Destruction Inspection By Steven C Shik Date 9-27-2001

COMMENTS: B1 DESTRUCTION VERIFIED 9-19-01 & 90 MIN, B2, B3 DESTRUCTION VERIFIED 9-21-01, 90 MIN & B4, B5 DESTRUCTION VERIFIED 9-24-01 & 90 MIN. SCPT-1 ~~45' 65 MIN 9-26-01 & 120 MIN 9-27-01~~ 5 & 8

PE CODES	SC INFO	AMOUNT REMITTED	CHECK#/CASH	RECEIVED BY	DATE	PERMIT/SERVICE REQUEST #	INVOICE #	WELL ID#
4372	150	230	7450	[illegible]	9/14/01	SR0027434		22950

Pitcher Drilling Co.

P.O. BOX 50387, PALO ALTO, CA 94303
PHONE: (650) 328-8910
FAX: (650) 328-3821

September 7th, 2001

San Joaquin Local Health District
445 North San Joaquin Street
Stockton, CA 95202

Attention: Mr. Ray Borges

Dear Mr. Borges:

Mr. Kevin Tillis of Hultgren-Tillis Engineers has our authorization to sign for drilling permits for the Tracy Peaker Project.

Very truly yours

PITCHER DRILLING CO.

Richard H. Lake
President

RHL/mlc

SR0027434

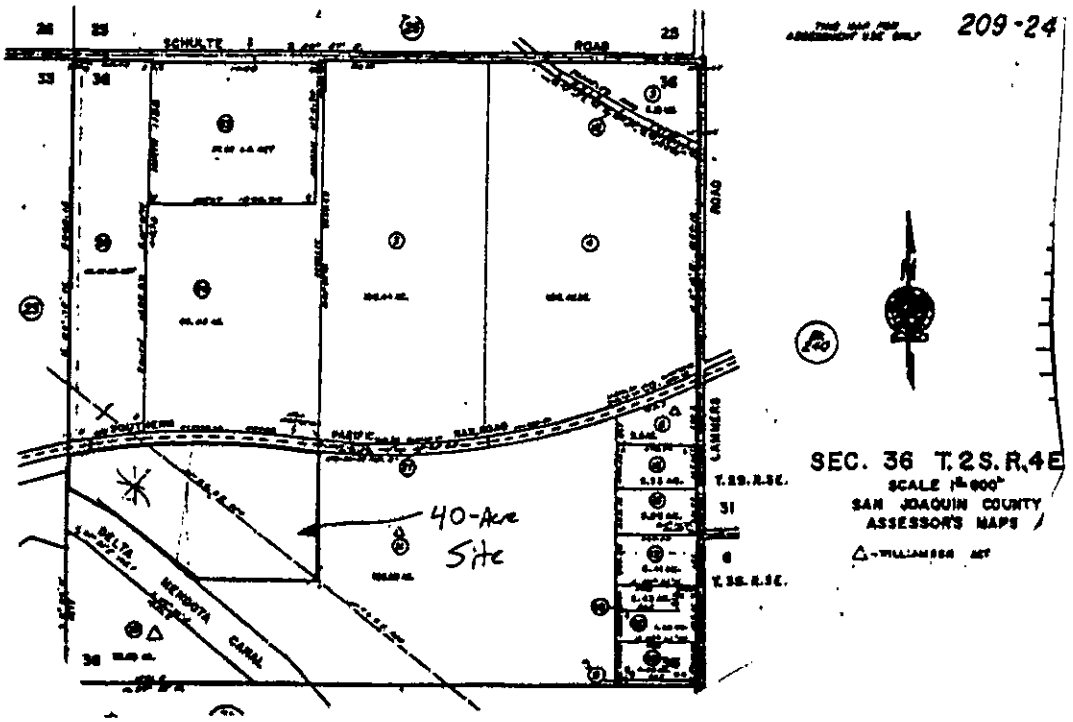

SITE
LOCATION
PLAN

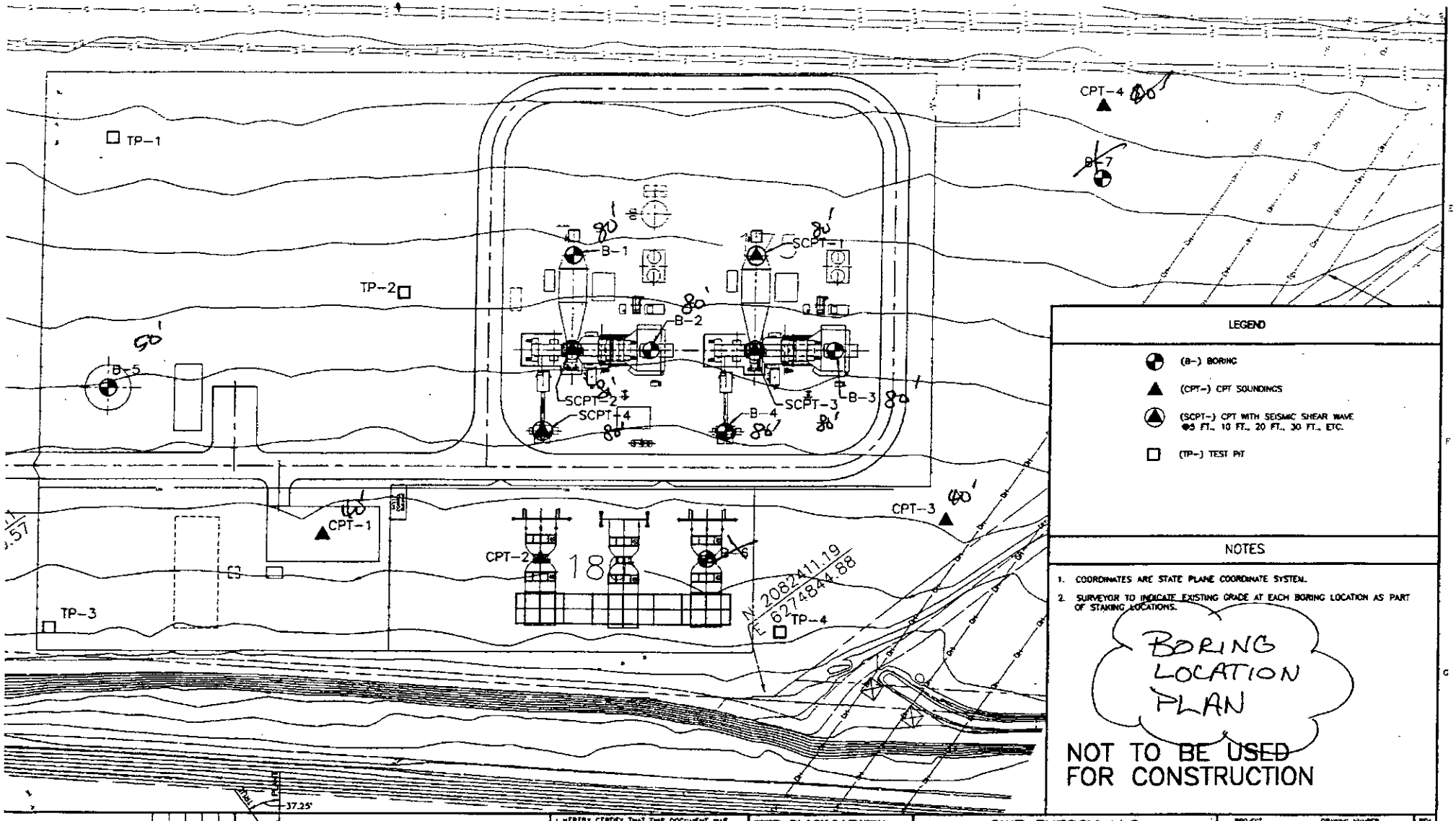

LEGEND

- (B-) BORING
- (CPT-) CPT SOUNDINGS
- (SCPT-) CPT WITH SEISMIC SHEAR WAVE @3 FT., 10 FT., 20 FT., 30 FT., ETC.
- (TP-) TEST PIT

NOTES

1. COORDINATES ARE STATE PLANE COORDINATE SYSTEM.
2. SURVEYOR TO INDICATE EXISTING GRADE AT EACH BORING LOCATION AS PART OF STAKING LOCATIONS.

BORING LOCATION PLAN

NOT TO BE USED FOR CONSTRUCTION

I HEREBY CERTIFY THAT THIS DOCUMENT WAS PREPARED BY ME OR UNDER MY DIRECT SUPERVISION AND THAT I AM A DULY REGISTERED PROFESSIONAL ENGINEER UNDER THE LAWS OF THE STATE OF CALIFORNIA.

SIGNED _____ DATE _____ REG NO _____

BLACK & VEATCH CORPORATION

GWF ENERGY LLC
TRACY PEAKER PROJECT

SITE
SUBSURFACE INVESTIGATION

PROJECT 069516-SS--0001 REV A

SUBSURFACE INVESTIGATION
VS AND RECORD OF ISSUE

SR0027434

PAYMENT RECEIVED

SEP 1 8 2001

SAN JOAQUIN COUNTY PUBLIC HEALTH SERVICES ENVIRONMENTAL HEALTH DIVISION

Geotechnical Investigation

WELL

WELL/PUMP PERMIT

SAN JOAQUIN COUNTY PUBLIC HEALTH SERVICES ENVIRONMENTAL HEALTH DIVISION
304 E. WEBER AVE, THIRD FLOOR STOCKTON CA 95202 (209) 468-3420

2-09-240-32 /

~~PERMIT~~ SCHULTE NON-REFUNDABLE PERMIT EXPIRES 1 YEAR FROM DATE ISSUED

JOB ADDRESS ~~26977 South Lammers Road~~ APN ~~209-24-11~~ (see map)

CITY/ZIP Tracy, CA 95370 PARCEL SIZE 40 acres

OWNER NAME GWF Power Systems ADDRESS 4300 Railroad Avenue

CITY/ZIP Pittsburg 94565 PHONE (925) 431-1182

CONTRACTOR Taber Consultants ADDRESS c/o Hultgren-Tillis Engineers 2520 Stanwell Drive, Suite 100

CITY/ZIP Concord, CA 94520 PHONE (925) 685-6300 C-57 LICENSE# 466270 EXP DATE 11/02

GEOGRAPHICAL INFORMATION: COORDINATES X____ Y____ TOWNSHIP 2S RANGE 4E SECTION 36

TYPE OF WELL: ☐ NEW WELL ☐ REPLACEMENT WELL ☐ MONITORING WELL #____ XX OTHER CPT

INSTALLATION: ☐ WELL SYSTEM REPAIR ☐ CROSS-CONNECT REPAIR ☐ VAPOR EXTRACTION WELL #____

TYPE OF PUMP: ☐ NEW ☐ REPAIR H.P.____ DEPTH PUMP SET____FT. FIRST WATER LEVEL____

☐ OUT-OF-SERVICE WELL ☐ GEOTECHNICAL #____ ☐ SOIL BORING____ ☐ DESTRUCTION:____

INTENDED USE Geotechnical **TYPE OF WELL** CPT **CONSTRUCTION SPECIFICATION**

☐ INDUSTRIAL ☐ OPEN BOTTOM WELL EXCAVATION DIA 2" CONDUCTOR CASING DIA____

☐ DOMESTIC PRIVATE ☐ GRAVEL PACK/SIZE____ WELL CASING TYPE____ WELL CASING DIA____

☐ PUBLIC/MUNICIPAL GEOTECHNICAL ONLY GROUT SEAL DEPTH____ SPECIFICATION____

☐ IRRIGATION/AG OTHER GROUT BRAND NAME neat cement grout

☐ MONITORING GROUT SEAL PUMPED: ☐ YES ☐ NO

☐ CHRISTY BOX ☐ ~~STOVEPIPE~~ NO CHEMICAL TESTING CONCRETE PEDESTAL BY DRILLER: ☐ YES ☐ NO

APPROXIMATE WELL DEPTH 40-80'

PROPOSED CONSTRUCTION/DRILLING METHOD: MUD ROTARY____ AIR ROTARY____ AUGER____ CABLE____ OTHER CPT

I HEREBY CERTIFY THAT I HAVE PREPARED THIS APPLICATION AND THAT THE WORK WILL BE DONE IN ACCORDANCE WITH SAN JOAQUIN COUNTY ORDINANCES, STATE LAWS, AND RULES AND REGULATIONS. I ALSO CERTIFY THAT MY C-57 LICENSE IS CURRENT AND ACTIVE WITH THE CALIFORNIA CONTRACTORS STATE LICENSE BOARD AND THAT I AM IN COMPLIANCE WITH ALL WORKMAN'S COMPENSATION LAWS.

MINIMUM 24 HOUR ADVANCE NOTICE REQUIRED FOR INSPECTIONS

SIGNED A. Taber -see attached- TITLE President DATE 9/10/01

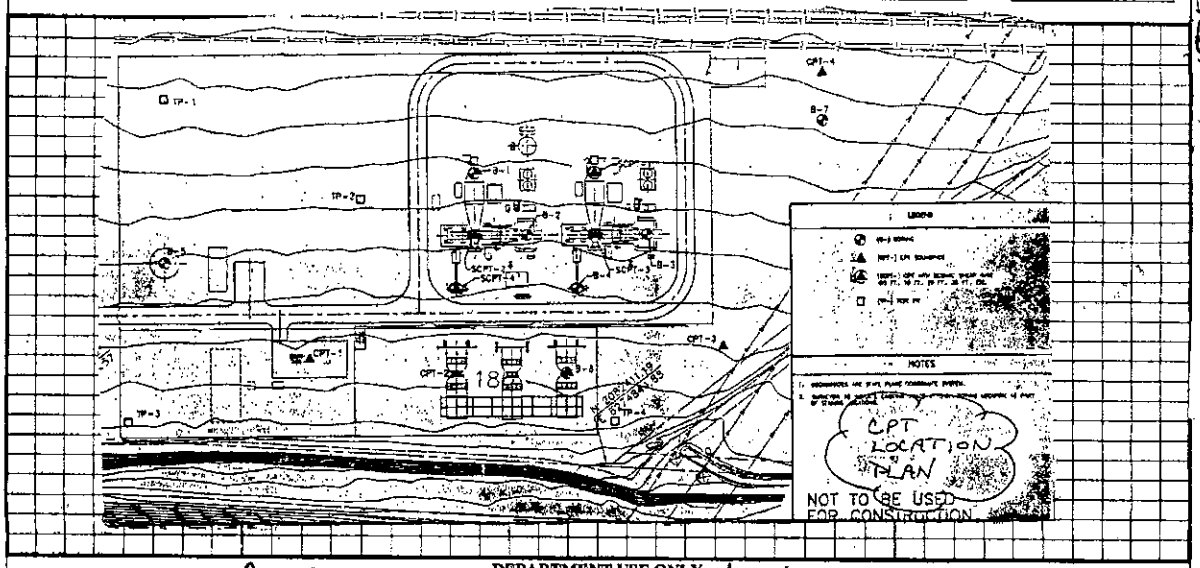

~~4950~~ 4950 E. SCHULTE RD.

DEPARTMENT USE ONLY

Application Accepted By Rinda A Turhollow Date 9/13/01 Area 216 EMPID# 7380

Grout Inspection By____ Date____ Pump Inspected By____ Date____

Destruction Inspection By Steven C. Shultz Date 9-29-2001

COMMENTS: SCPT 1-45' 60 MIN 9-26-01 SJ, 120 min 9-29-01 SJ

PE CODES	SC INFO	AMOUNT REMITTED	CHECK# / CASH	RECEIVED BY	DATE	PERMIT/SERVICE REQUEST #	INVOICE #	WELL ID#
4372	150	230.00	7450 7452	tds	9/18/01	SR0027435		22949

2

Taber
Since 1954

3911 West Capitol Avenue
West Sacramento, CA 95691-2116
(916) 371-1690
(707) 575-1568
Fax (916) 371-7265
www.taberconsultants.com

FAX TRANSMITTAL

June 5, 2001

County of San Joaquin
Department of Health

c/o Hultgren – Tillis Engineers
Attention: Kevin Tillis

Fax: (925) 685-6768

From: Andrew L. Taber, Phone: (916) 371-1690

Re: Application for Well Permit

TABER CONSULTANTS, California Licensed Drill (C-57) Contractor No. 466270, hereby authorizes Hultgren – Tillis Engineers to sign Well Permit Applications on our behalf in the County of San Joaquin. We have workers' compensation insurance with the State Fund under policy no. 541-00 unit 0000005 which expires May 1, 2002.

If there are questions, please don't hesitate to call.

TABER CONSULTANTS

Andrew L. Taber
President

SR0027435

Taber Consultants
Engineers and Geologists

Hultgren-Tillis Engineers
specializing in geotechnical engineering

R. Kevin Tillis
Principal Engineer

2520 Stanwell Drive, Suite 100 • Concord, California 94520
Phone (925) 685-6300 • Fax (925) 685-6768
email: tillis@hultgrentillis.com

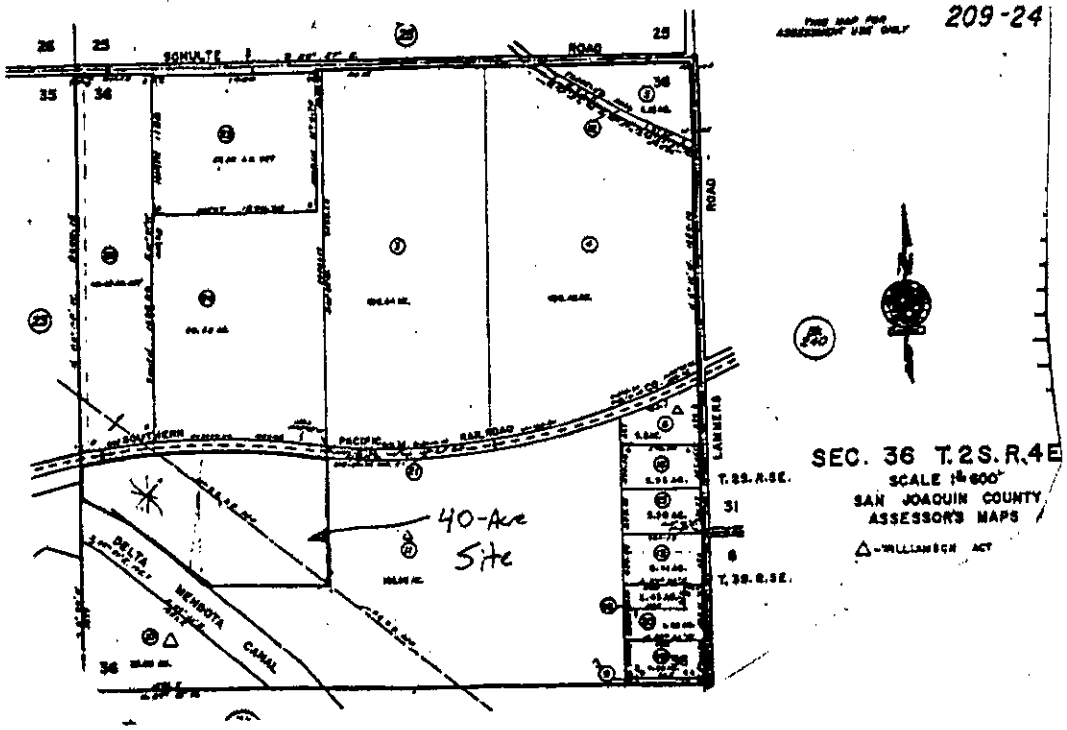

SITE LOCATION PLAN

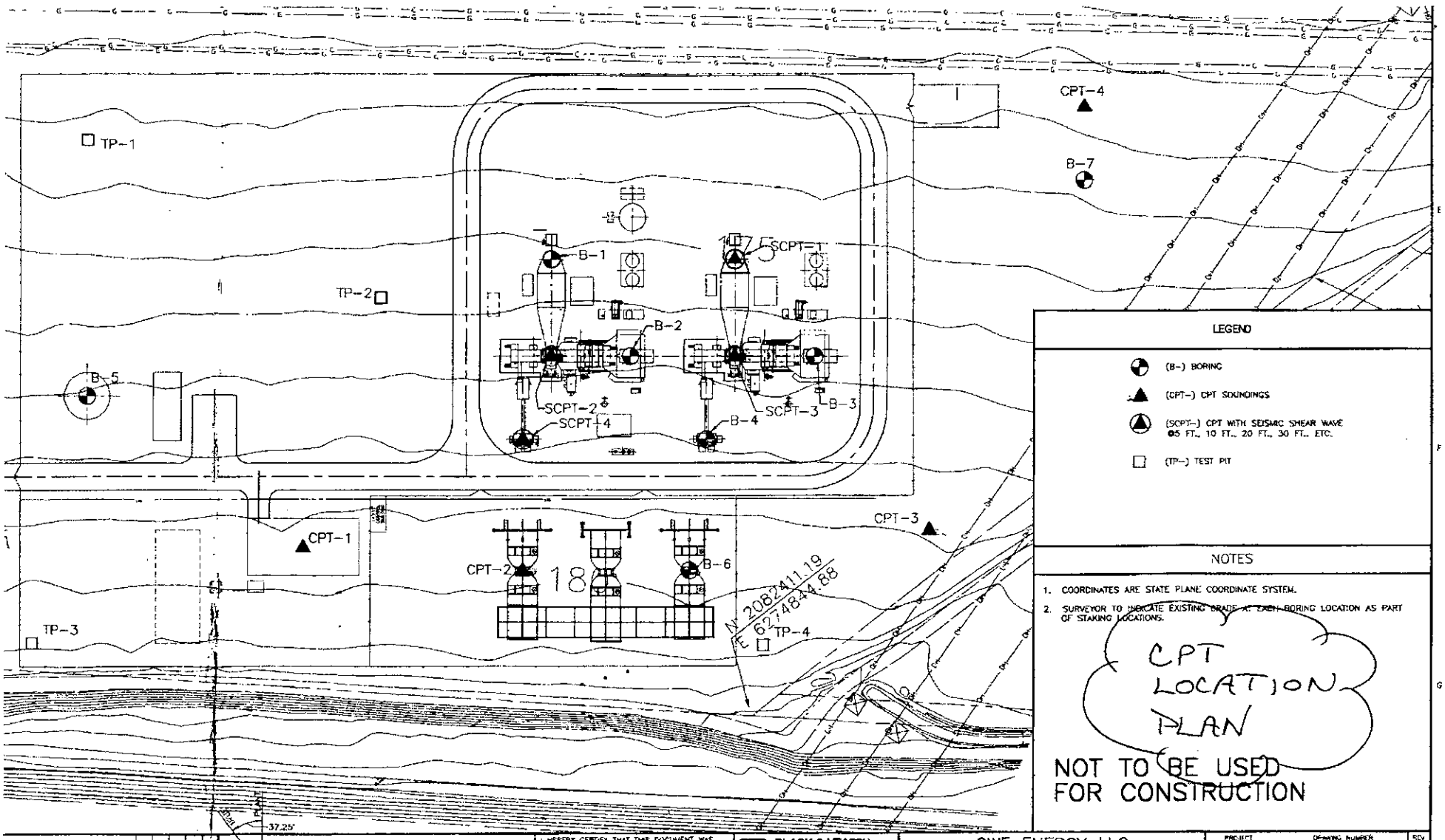

LEGEND

- (B-) BORING
- (CPT-) CPT SOUNDINGS
- (SCPT-) CPT WITH SEISMIC SHEAR WAVE @5 FT., 10 FT., 20 FT., 30 FT., ETC.
- (TP-) TEST PIT

NOTES

1. COORDINATES ARE STATE PLANE COORDINATE SYSTEM.
2. SURVEYOR TO INDICATE EXISTING GRADE AT EACH BORING LOCATION AS PART OF STAKING LOCATIONS.

CPT LOCATION PLAN

NOT TO BE USED FOR CONSTRUCTION

URFACE INVESTIGATION
AND RECORD OF ISSUE

I HEREBY CERTIFY THAT THIS DOCUMENT WAS PREPARED BY ME OR UNDER MY DIRECT SUPERVISION AND THAT I AM A DULY REGISTERED PROFESSIONAL ENGINEER UNDER THE LAWS OF THE STATE OF CALIFORNIA
SIGNED
DATE REG NO

BLACK & VEATCH CORPORATION
ENGINEER WMS DRAWN RGH
CHECKED DATE

GWF ENERGY LLC
TRACY PEAKER PROJECT
SITE
SUBSURFACE INVESTIGATION

PROJECT 069516-SS-0001
DRAWING NUMBER
REV A
CODE
AREA

WELL/PUMP PERMIT

SAN JOAQUIN COUNTY PUBLIC HEALTH SERVICES ENVIRONMENTAL HEALTH DIVISION
304 E. WEBER AVE., STOCKTON CA 95202 (209) 468-3420

Victoria 925 225 7824 (W) 925 895 3498 (C) 40

NON-REFUNDABLE PERMIT EXPIRES 1 YEAR FROM DATE ISSUED

JOB ADDRESS 14950 W. Schulte Rd
PARCEL SIZE/APN 209 240 31 CITY/ZIP Tracy, 95377
OWNER NAME ~~BWF~~ BWF Energy ADDRESS ~~P.O. Box 3010~~ 14950 W. Schulte Rd
CITY/ZIP ~~San Francisco 9515~~ Tracy PHONE ~~415 923 6902~~ 925-766-7735
CONTRACTOR Fisch Environ ADDRESS 399 Stlepi's Place
CITY/ZIP Valley Springs, 95252 PHONE 209-772-3570 # 683865

GEOGRAPHICAL INFORMATION: COORDINATES X____ Y____ TOWNSHIP 2S RANGE 4E SECTION 36

TYPE OF WELL: ☐ NEW WELL ☐ REPLACEMENT WELL ☐ MONITORING WELL #____ ☒ OTHER 6 Soil Borings

INSTALLATION: ☐ WELL SYSTEM REPAIR ☐ CROSS-CONNECT REPAIR ☐ VAPOR EXTRACTION WELL #____

TYPE OF PUMP: ☐ NEW ☐ REPAIR H.P.____ DEPTH PUMP SET ____FT. FIRST WATER LEVEL ____

☐ OUT-OF-SERVICE WELL ☐ GEOTECHNICAL #____ ☒ SOIL BORING 6 ☐ DESTRUCTION:____

INTENDED USE	TYPE OF WELL	CONSTRUCTION SPECIFICATION
☐ INDUSTRIAL	☐ OPEN BOTTOM	WELL EXCAVATION DIA____ CONDUCTOR CASING DIA____
☐ DOMESTIC PRIVATE	☐ GRAVEL PACK/SIZE____	WELL CASING TYPE____ WELL CASING DIA____
☐ PUBLIC/MUNICIPAL	☐ DRIVEN	GROUT SEAL DEPTH ____ SPECIFICATION____
☐ IRRIGATION/AG	24 HR NOTICE REQUESTED FOR ALL INSPECTIONS	OTHER GROUT BRAND NAME____
☐ MONITORING		GROUT SEAL PUMPED: ☐ YES ☐ NO
☐ CHRISTY BOX ☐ STOVE PIPE		CONCRETE PEDESTAL BY DRILLER: ☐ YES ☐ NO

APPROXIMATE ~~WELL~~ DEPTH boring 10 feet

PROPOSED CONSTRUCTION/DRILLING METHOD: MUD ROTARY____ AIR ROTARY ____ AUGER ____ CABLE____ OTHER geoprobe

I HEREBY CERTIFY THAT I HAVE PREPARED THIS APPLICATION AND THAT THE WORK WILL BE DONE IN ACCORDANCE WITH SAN JOAQUIN COUNTY ORDINANCES, STATE LAWS, AND RULES AND REGULATIONS OF SAN JOAQUIN COUNTY.

SIGNED: K. Ellsworth (Victoria Ellsworth) Stan 707 332 4899
TITLE: Project Geologist DATE: 01-08-03

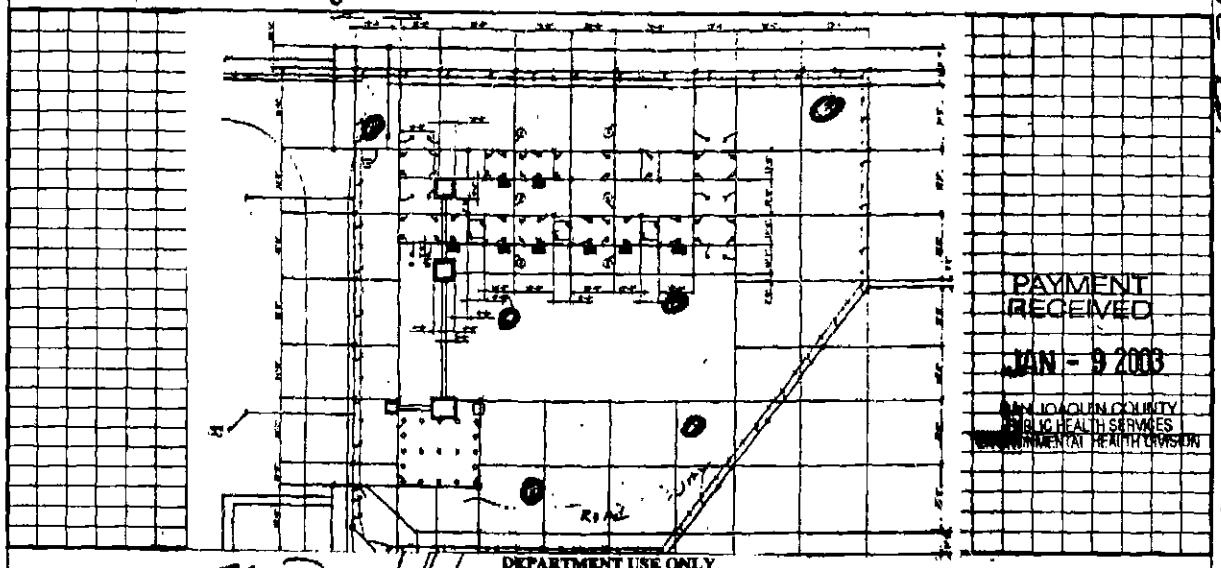

PAYMENT RECEIVED
JAN - 9 2003
SAN JOAQUIN COUNTY
PUBLIC HEALTH SERVICES
ENVIRONMENTAL HEALTH DIVISION

DEPARTMENT USE ONLY

Application Accepted By [signature] Date 01/09/03 Area 216
Grout Inspection By [signature] Date 1/31/03 Pump Inspected By____ Date____
Destruction Inspection By____ Date____
COMMENTS: 1/31/03 6 soil borings 8'-10' depth all filled with cement

PE CODES	SC INFO	AMOUNT REMITTED	CHECK#/ CASH	RECEIVED BY	DATE	PERMIT/SERVICE REQUEST #	WELL ID#
4372	150	230-	3025	rd	1/9/03	SERQ32369	WP 0024337

14950 W. Schulte Rd.

3

JOB ADDRESS:_____ **PERMIT #:**_____

LICENSED CONTRACTORS DECLARATION

I hereby affirm that I am licensed under the provisions of Chapter 9 (commencing with Section 7000) of Division 3 of the Business and Professions Code, and my license is in full force and effect.

License #_____ Exp.:Date_____

Date_____Contractor_____

OWNER-BUILDER DECLARATION

I hereby affirm that I am exempt from the Contractor's License Law for the following reason (Sec. 7031.5, Business and Professions Code; Any city or county which requires a permit to construct, alter, improve, demolish, or repair any structure, prior to its issuance, also requires the applicant for such permit to file a signed statement that he is licensed pursuant to the provisions of the Contractor's License Law (Chapter 9 (commencing with Section 7000) of Division 3 of the Business and Professions Code) or that he is exempt therefrom and the basis for the alleged exemption. Any violation of Section 7031.5 by any applicant for a permit subjects the applicant to a civil penalty of not more than five hundred dollars ($500)):

☐ I, as owner of the property, or my employees with wages as their sole compensation, will do the work, and the structure is not intended or offered for sale (Sec. 7044, Business and Professions Code: The Contractor's License Law does not apply to an owner of property who builds or improves thereon, and who does such work himself or through his own employees, provided that such improvements are not intended or offered for sale. If, however, the building or improvement is sold within one year of completion, the owner-builder will have the burden of proving that he did not build or improve for the purpose of sale.)

☐ I, as owner of the property, am exclusively contracting with licensed contractors to construct the project (Sec. 7044, Business and Profession Code: The Contractor's License Law does not apply to an owner of property who builds or improves thereon, and who contracts for such projects with a contractor(s) licensed pursuant to the Contractor's License Law.)

☐ I am exempt under Sec. _____, B & P.C. for this reason _____

_____

Date _____ Owner _____

WORKERS' COMPENSATION DECLARATION

I hereby affirm that I have a certificate of consent to self-insure, or a certificate of Workers' Compensation Insurance, or a certified copy thereof (Sec. 3800, Lab. C).

Exp. Date _____ Company_____

☐ Certified copy is hereby furnished

☐ Certified copy is filed with the County Building Inspection Division

CERTIFICATE OF EXEMPTION FROM WORKERS' COMPENSATION INSURANCE

(This section need not be completed, if the permit is for one hundred dollars ($100) or less)
I certify that in the performance of the work for which this permit is issued, I shall not employ any person in any manner so as to become subject tot he Workers' Compensation Laws of California.

Date_____ Applicant_____

NOTICE TO APPLICANT: If, after making this Certificate of Exemption, you should become subject to the Workers' Compensation provisions of the Labor Code, you must forthwith comply with such provisions or this permit shall be deemed revoked.

CONSTRUCTION LENDING AGENCY

I hereby affirm that there is a construction lending agency for the performance of the work for which this permit is issued (Sec. 3097, Civ. C).

Lender's Name_____

Lender's Address_____

DIVISION OF INDUSTRIAL SAFETY PERMIT CERTIFICATION:

☐ I hereby certify that no excavation five (5) or more feet in depth into which a person is required to descend, will be make in connection with work authorized by the permit, and that no building structure, scaffolding, falsework, or demolition or dismantling thereof, will be more than thirty-six (36) feet high. (Chap. 3.2, Grp 2, Art 2, Sec 341, Title 8, C.A.C.).

☐ As owner-builder, I will not employ anyone to do work which would require a permit from the Division of Industrial Safety, as noted above, unless such person has a permit to do such work from the division.

☐ Division of Industrial Permit No. _____

I certify that I have read this application and state that the above information is correct. I agree to comply with all city and county ordinances and state laws relating to well construction and or sewage system construction, and hereby authorize representatives of this city to enter upon the above-mentioned property for inspection purposes.

Date_____Applicant_____

ATC ASSOCIATES INC.
6602 Owens Drive, Suite 100
Pleasanton, CA 94588
Tel: 925-460-5300
Fax: 925-463-2659

ATC has grown into one of the nation's largest environmental consulting, engineering, and construction services companies with an ENR rating of 29 among the top 200 environmental firms in the U.S. Our service areas include:

- *environmental*
- *building science*
- *infrastructure*
- *geotechnical and material testing*
- *information systems*
- *training*

DATE: 1/9/03

TO: Tammi

CC:

COMPANY: San Joaquin Env. Health Dept
PHONE: (209) 468-9998
FAX: (209) 464-0138

FROM: Jim Lehrman

PHONE: 925-460-5300
FAX: 925-463-2659

PAGES (incl. cover): 3

SUBJECT: Boring Permit, PG&E Tracy Site

Attached are maps showing the property location and the proposed soil boring locations.

Call me with any questions

For more information, visit our website: www.atc-enviro.com

CONFIDENTIALITY NOTICE: The documents accompanying this fax transmission contain confidential and privileged information intended for the exclusive use of the individual or entity named above. If the reader of this message is not the intended recipient, or the employee or agent responsible for delivering it to the intended recipient, you are hereby notified that any dissemination, distribution or copying of the documents accompanying this fax transmission is strictly prohibited. If you have received this fax in error, please immediately notify us by telephone to arrange for its return. Thank you.

SK00328b9

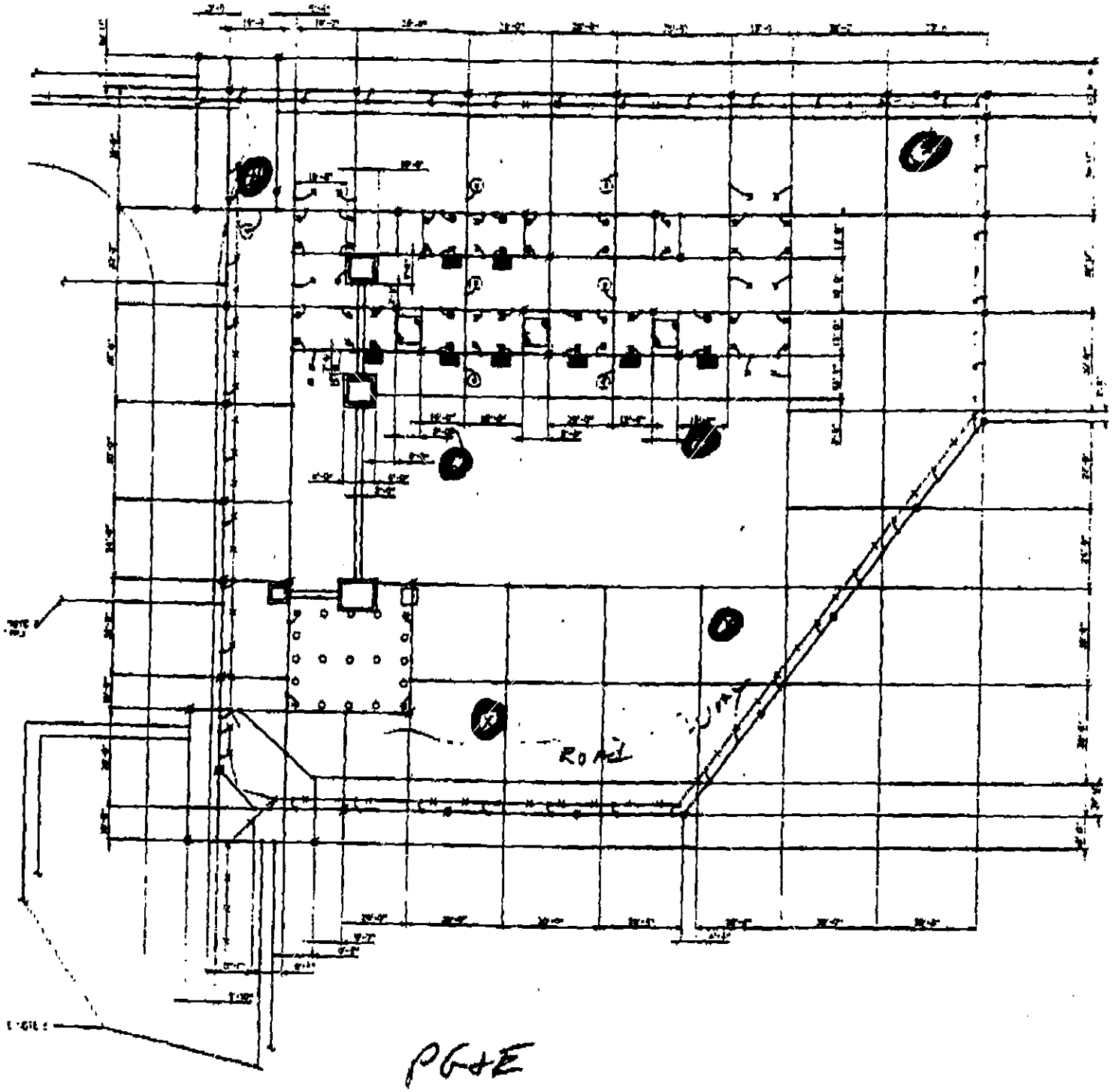

PG+E

Tracy Parker

○ – Proposed Boring Locations

1/7/03

SR0032329

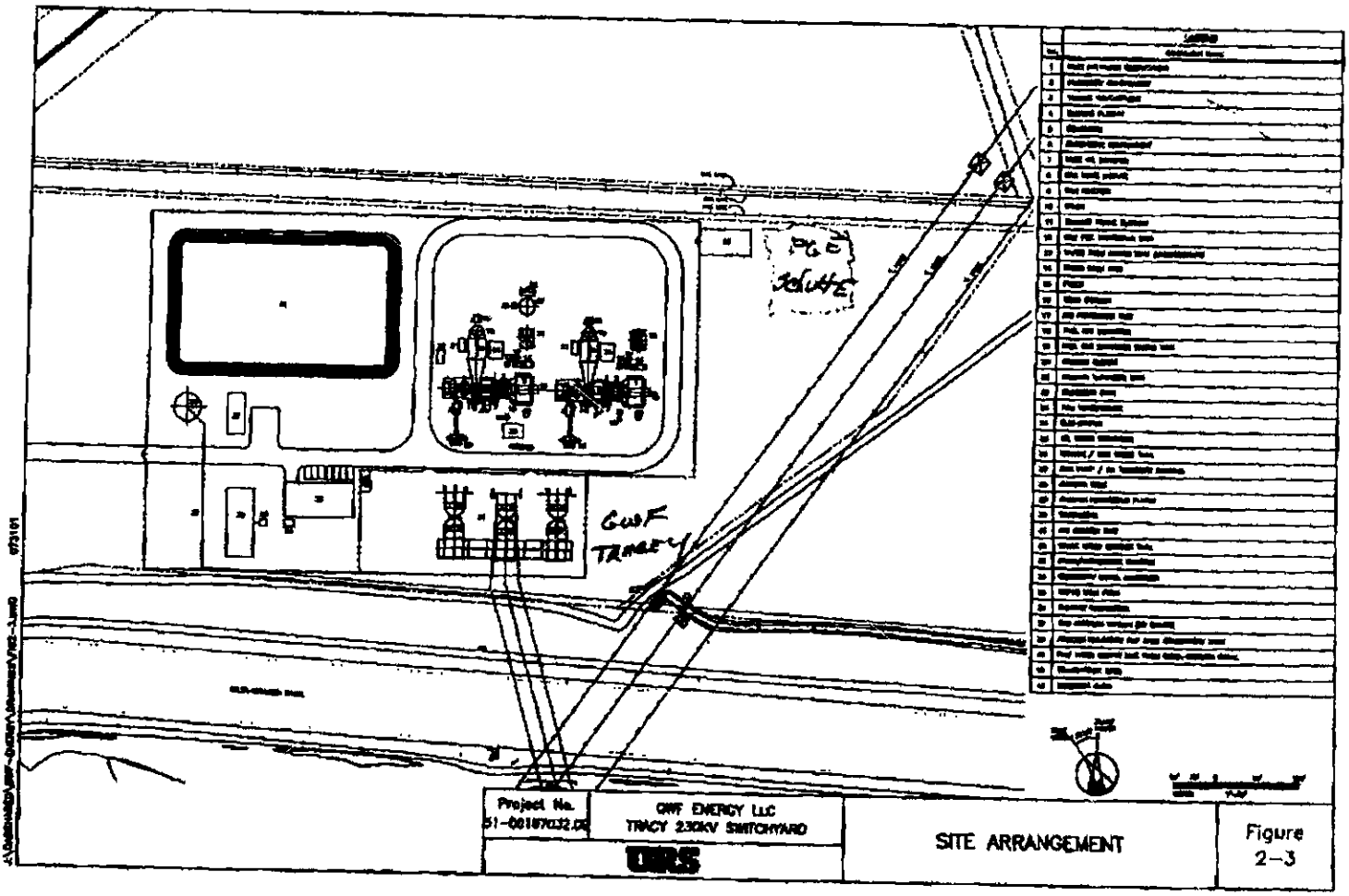
PG&E
GWF
TRACY
Project No.
GWF ENERGY LLC
TRACY 230KV SWITCHYARD
URS
SITE ARRANGEMENT
Figure
2-3

SP0032869

WELL / PUMP PERMIT

SAN JOAQUIN COUNTY ENVIRONMENTAL HEALTH DEPARTMENT — 304 E WEBER AVE 3RD FL - STOCKTON CA 95202 - (209) 468-3420

NON-REFUNDABLE PERMIT — CALL (209) 953-7697 FOR INSPECTIONS — EXPIRES 1 YEAR FROM DATE ISSUED

JOB ADDRESS 1500 W SCHULTE RD — CITY/ZIP TRACY, 95377

CROSS STREET LAMMERS — APN 209-240-25 — PARCEL SIZE 46.42 — LAND USE APPLICATION # _____

OWNER NAME NUTTING RICE TRACY LLC — PHONE _____

OWNER ADDRESS ONE WALNUT LANDING — CITY/STATE/ZIP SYRACUSE, NY 13207

CONTRACTOR JOHNSON ELECTRIC — PHONE 209 982 0189

CONTRACTOR ADDRESS 405 W MANILA AV — CITY/STATE/ZIP LATHROP, CA 95330

SUBCONTRACTOR _____ — PHONE _____

SUBCONTRACTOR ADDRESS _____ — CITY/STATE/ZIP _____

LICENSE ☐ C-57 ☐ C-61 ☐ D-09 ☒ Other C10 — NUMBER 506689 — EXPIRATION DATE 3/31/05

GEOGRAPHICAL INFORMATION: Coordinates X _____ Y _____ Township _____ Range _____ Section _____

INTENDED USE ☐ Domestic/Private ☐ Irrigation/Agricultural ☐ Industrial ☐ Water Quality Monitoring ☐ Soil Sampling/Characterization
☐ Public Water System (If different from Owner) _____ Water System Name _____ Contact Name or Phone Number

TYPE OF WORK ☐ New Well ☐ Replacement Well ☐ Well Alteration/Modification ☐ Test Hole ☒ Other _____
☐ Monitoring Well(s) _____ # of wells ☐ Soil Boring(s) _____ # of borings ☐ Geotechnical _____ # of borings
☐ Well Destruction ☐ Out-Of-Service Well ☐ Out-Of-Service Well Renewal
☐ New Pump ☐ Pump Replacement ☐ Pump Repair ☒ Cross-Connection Repair BACK FLOW

WELL CONSTRUCTION
Drilling Method ☐ Mud Rotary ☐ Air Rotary ☐ Auger ☐ Cable Tool ☐ Push Point ☐ Other _____
Proposed Well Depth _____ ft Excavation _____ in diameter ☐ Open Bottom ☐ Gravel Pack / Gravel Size _____ in diameter
☐ Conductor Casing _____ in diameter / Conductor Casing Depth _____ ft
Well Casing Diameter _____ in Thickness/Gauge/ASTM Sched _____ ☐ Steel ☐ Plastic ☐ Stainless Steel ☐ Other _____
Grout Seal Depth _____ ft ☐ Neat Cement (94 lb bag / 5-10 gal water) ☐ Sand Cement _____ sack mix / 7 gal water
☐ Bentonite (20% solids) ☐ Manufacturer Spec % solids _____ % Name _____ ☐ Specs on File ☐ Specs Submitted
Grout Placement Method ☐ Pumped ☐ Free Fall ☐ Other _____ ☐ Retardant / Accelerator (name) _____

PEDESTAL Installed By ☐ Driller ☐ Pump Contractor ☐ Other _____
☐ Concrete Pedestal Dimensions: Width _____ ft Length _____ ft Thick _____ in ☐ Christy Box ☐ Stove Pipe

PUMP ☐ Submersible ☐ Turbine ☐ Other _____ HP _____ Pump Set _____ ft Standing Water Level _____ ft

WELL DESTRUCTION ☐ Open Bottom ☐ Gravel Pack ☐ Uncased ☐ Other _____
Well Diameter _____ in Total Depth _____ ft Depth to Water _____ ft ☐ Casing to be Perforated from _____ ft to _____ ft
Sealing Material ☐ Neat Cement (94 lb bag / 5-10 gal water) ☐ Sand Cement _____ sack mix / 7 gal water ☐ Bentonite Pellets
☐ Bentonite (20% solids) ☐ Manufacturer Spec % solids _____ % Name _____ ☐ Specs on File ☐ Specs Submitted
Placement Method ☐ Pumped ☐ Free Fall ☐ Other _____
☐ Complete with Mushroom Cap _____ ft below grade ☐ Complete to Existing Surface Pad

SITE ADDRESS: 1500 W Schulte Rd

I HEREBY CERTIFY THAT I HAVE PREPARED THIS APPLICATION AND THAT THE WORK WILL BE DONE IN ACCORDANCE WITH SAN JOAQUIN COUNTY ORDINANCES, STATE LAWS, AND RULES AND REGULATIONS. I ALSO CERTIFY THAT MY REQUIRED LICENSE IS CURRENT AND ACTIVE WITH THE CALIFORNIA CONTRACTORS STATE LICENSE BOARD AND THAT I AM IN COMPLIANCE WITH ALL WORKERS COMPENSATION LAWS.

MINIMUM 24 HOUR ADVANCE NOTICE REQUIRED FOR INSPECTIONS

SIGNED _____ TITLE OWNER DATE 7-29-04

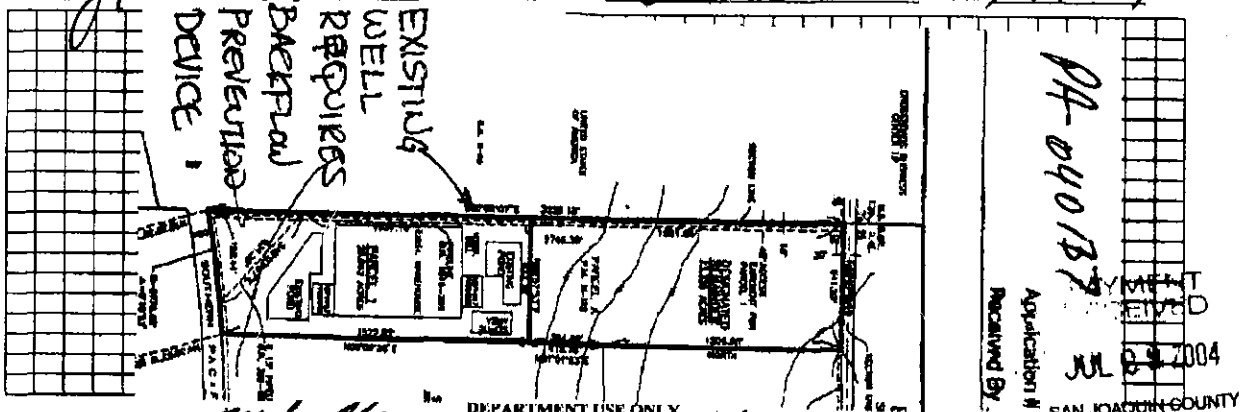

DEPARTMENT USE ONLY

Application Accepted By _____ Date 7-29-04 Area 216 Employee ID 5/99

Grout Inspection By _____ Date _____ ☐ SPECIAL Well Permit

Pump Inspection By _____ Date 7/29/04 ☐ WAIVER Received

Destruction Inspection By _____ Date _____ Constructed Well Depth _____ ft

COMMENTS _____

PE Codes	SC Info	Received By	Check# / Cash	Amount Remitted	Date	Permit/ Service Request #	Invoice #	Well ID#
4360	50	ZL	10379	$50.00	7/29/04	SR0038983		

4

JOB ADDRESS: _____ PERMIT #: _____

LICENSED CONTRACTORS DECLARATION

I hereby affirm that I am licensed under the provisions of Chapter 9 (commencing with Section 7000) of Division 3 of the Business and Professions Code and my license is in full force and effect.

License # _____ **Expiration Date** _____

Date _____ **Contractor** _____

OWNER-BUILDER DECLARATION

I hereby affirm that I am exempt from the Contractor's License Law for the following reason (Section 7031.5, Business and Professions Code: Any city or county which requires a permit to construct, alter, improve, demolish, or repair any structure, prior to its issuance, also requires the applicant for such permit to file a signed statement that he is licensed pursuant to the provisions of the Contractor's License Law (Chapter 9 (commencing with Section 7000) of Division 3 of the Business and Professions Code) or that he is exempt therefrom and the basis for the alleged exemption. Any violation of Section 7031.5 by any applicant for a permit subjects the applicant to a civil penalty of not more than five hundred dollars ($500)):

☐ I, as owner of the property, or my employees with wages as their sole compensation, will do the work, and the structure is not intended or offered for sale (Section 7044, Business and Professions Code: The contractor's License Law does not apply to an owner of property who builds or improves thereon, and who does such work himself or through his own employees, provided that such improvements are not intended or offered for sale. If, however, the building or improvement is sold within one year of completion, the owner-builder will have the burden of proving that he did not build or improve for the purpose of sale.)

☐ I, as owner of the property, am exclusively contracting with licensed contractors to construct the project (Section 7044, Business and Professions Code (B&PC): The Contractor's License Law does not apply to an owner of property who builds or improves hereon, and who constructs for such projects with a contractor(s) licensed pursuant to the Contractor's License Law.)

☐ I am exempt under Section _____ , B&PC for this reason _____

_____

Date: _____ **Owner** _____

WORKERS' COMPENSATION DECLARATION

I hereby affirm that I have a certificate of consent to self-insure, or a certificate of Workers' Compensation Insurance, or a certified copy thereof (Section 3800, Labor Code).

Expiration Date _____ **Company** _____

☐ Certified copy is hereby furnished

☐ Certified copy is filed with the Environmental Health Department

CERTIFICATE OF EXEMPTION FROM WORKERS' COMPENSATION INSURANCE

(This section need not be completed if the permit is for one hundred dollars ($100) or less)

I certify that in the performance of the work for which this permit is issued, I shall not employ any person in any manner so as to become subject to the Workers' Compensation Laws of California.

Date: _____ **Applicant** _____

NOTICE TO APPLICANT: If, after making this Certificate of Exemption, you should become subject to the Workers' Compensation provisions of the Labor Code, you must forthwith comply with such provisions or this permit shall be deemed revoked.

CONSTRUCTION LENDING AGENCY

I hereby affirm that there is a construction lending agency for the performance of the work for which this permit is issued (Section 3097, Civil Code).

Lender's Name _____

Lender' Address _____

DIVISION OF INDUSTRIAL SAFETY PERMIT CERTICATION

☐ I hereby certify that no excavation five (5) or more feet in depth into which a person is required to descend, will be made in connection with work authorized by the permit, and that no building structure, scaffolding, falsework, or demolition or dismantling thereof, will be more than thirty-six (36) feet high. (Chapter 3.2, Group 2, Article 2, Section 341, Title 8, California Administrative Code).

☐ As owner-builder, I will not employ anyone to do work which would require a permit from the Division of Industrial Safety, as noted above, unless such person has a permit to do such work from the division.

☐ Division of Industrial Safety Permit # _____

I certify that I have read this application and state that the above information is correct. I agree to comply with all city and county ordinances and state laws relating to well construction and or sewage system construction, and hereby authorize representatives of this county to enter upon the above-mentioned property for inspection purposes.

Date _____ **Applicant** _____

APPLICATION FOR PERMIT
SAN JOAQUIN LOCAL HEALTH DISTRICT
1601 E. HAZELTON AVE., STOCKTON, CA
Telephone (209) 466-6781

PERMIT EXPIRES 1 YEAR FROM DATE ISSUED

(Complete in Triplicate)

Application is hereby made to the San Joaquin Local Health District for a permit to construct and/or install the work herein described. This application is made in compliance with San Joaquin County Ordinance No. 549 for sewage or No. 1862 for well/pump and the Rules and Regulations of the San Joaquin Local Health District.

Job Address 15000 Shulte Rd. City Tracy Lot Size _____ PM _____

Owner's Name Owens Glass Plant Address 15000 Shulte Rd Phone _____

Contractor E. Anthony & Son Address 6002 Bluegum Modesto License No. 444-891 Phone 523-4217

TYPE OF WELL/PUMP: NEW WELL ☐ WELL REPLACEMENT ☐ DESTRUCTION ☐
PUMP INSTALLATION ☐ SYSTEM REPAIR ☐ OTHER ☐

DISTANCE TO NEAREST: SEPTIC TANK _____ SEWER LINES _____ DISPOSAL FLD. _____ PROP. LINE _____
FOUNDATION _____ AGRICULTURE WELL _____ OTHER WELL _____ PITS/SUMPS _____

INTENDED USE	TYPE OF WELL	PROBLEM AREA	CONSTRUCTION SPECIFICATIONS
☐ Industrial	☐ Open Bottom	☐ Manteca	Dia. of Well Excavation _____ Dia. of Well Casing _____
☐ Domestic/Private	☐ Gravel Pack	☐ Tracy	Type of Casing _____ Specifications
☐ Public	☐ Other	☐ Delta	Depth of Grout Seal _____ Type of Grout _____
☐ Irrigation	___ Approx. Depth	☐ Eastern	Surface Seal Installed by _____
Repair Work Done ☐	Type of Pump _____		H.P. _____ State Work Done _____
Well Destruction ☐	Well Diameter _____		Sealing Material (top 50') _____
	Depth _____		Filler Material (Below 50') _____

TYPE OF SEPTIC WORK: NEW INSTALLATION ☑ REPAIR/ADDITION ☐ DESTRUCTION ☐ (No septic system permitted if public sewer is available within 200 feet.)

Installation will serve: Residence ___ Commercial X Other _____
Number of living units: _____ Number of bedrooms _____
Character of soil to a depth of 3 feet: Heavy Loam Water table depth 90'

SEPTIC TANK ☑ Type/Mfg Pre Cast Capacity 1200 No. Compartments 2
PKG. TREATMENT PLT. ☐ Method of Disposal _____
Distance to nearest: Well 300 Foundation 50' Property Line 40'

LEACHING LINE ☑ No. & Length of lines 1 - 100' Total length/size 100'
FILTER BED ☐ Distance to nearest: Well 300' Foundation 150' Property Line 340'

SEEPAGE PITS ☐ Depth 10' Size 6'x10'x10' Number 1
SUMPS ☑ Distance to nearest: Well _____ Foundation _____ Property Line _____
DISPOSAL PONDS ☐

I hereby certify that I have prepared this application and that the work will be done in accordance with San Joaquin county ordinances, state laws, and rules and regulations of the San Joaquin Local Health District.
Home owner or licensed agent's signature certifies the following: "I certify that in the performance of the work for which this permit is issued, I shall not employ any person in such manner as to become subject to workman's compensation laws of California." Contractor's hiring or sub-contracting signature certifies the following: "I certify that in the performance of the work for which this permit is issued, I shall employ persons subject to workman's compensation laws of California."

The applicant must call for all required inspections. Complete drawing on reverse side.

Signed X Lee Anthony Title: _____ Date: 11-15-88

FOR DEPARTMENT USE ONLY

Application Accepted by Mark Wagner Date 11-16-88 Area 13

Pit or Grout Inspection by _____ Date _____ Final Inspection by Mark Wagner Date 11-16-88

Additional Comments: _____

☐ Stk 466-6781 ☐ Lodi 369-3621 ☐ Manteca 823-7104 ☐ Tracy 835-6385

Applicant - Return all copies to: Environmental Health Permit/Services 1601 E. Hazelton Ave., P.O. Box 2009, Stk., CA 95201

FEE INFO	AMOUNT DUE	AMOUNT REMITTED	CK # CASH	RECEIVED BY	DATE	PERMIT NO.
					11/21/88	88-3096

5

PLOT PLAN
(Draw To Scale)

SCALE _____" TO_____

1. Names of streets or roads nearest to or bounding the property.
2. Outline of the property, giving dimensions and North direction.
3. Dimensioned outlines and locations of all existing and proposed structures, including covered areas such as patios, driveways and walks.
4. Location of house sewer outlet, public sewer, sewage disposal system or proposed sewage disposal system, proposed expansion of sewage disposal system, or any other possible source of contamination.
5. Location of other wells within radius of 150 feet on the property or adjoining property.
6. Location of sewage disposal system on adjoining property or within a radius of 150 feet.

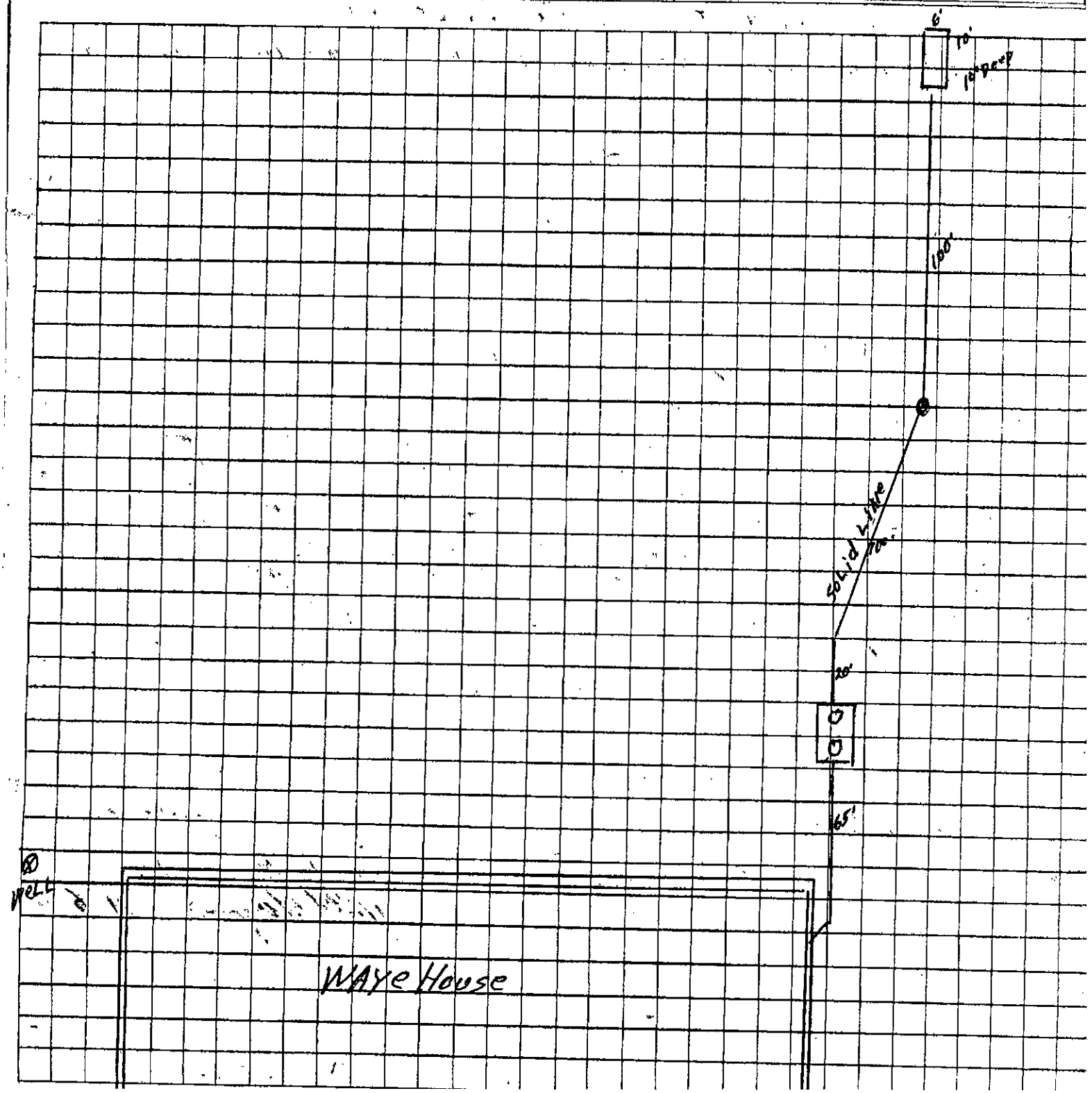

~~11:30 am~~ 12:70

ONSITE WASTEWATER TREATMENT SYSTEM PERMIT

SAN JOAQUIN COUNTY ENVIRONMENTAL HEALTH DEPARTMENT — 304 E WEBER AVE - 3RD FL - STOCKTON CA 95202 - (209) 468-3420

NON-REFUNDABLE PERMIT — CALL (209) 953-7697 FOR INSPECTIONS — EXPIRES 1 YEAR FROM DATE ISSUED

SITE ADDRESS: 15000 W Schulte Rd

JOB ADDRESS: 15000 W. Schulte Rd — CITY/ZIP: Tracy, 95377

CROSS STREET: Hansen Rd — APN: 209-240-25 — PARCEL SIZE: 46.4

OWNER NAME: Nutting Rice Tracy, LLC — PHONE: 315-471-5338

OWNER ADDRESS: one websters landing — CITY/STATE/ZIP: Syracuse, NY 13202

CONTRACTOR: Kleinfelder, Inc — PHONE: 209-948-1345

CONTRACTOR ADDRESS: 2825 E. Myrtle St. — CITY/STATE/ZIP: Stockton, CA 95205

LICENSE: ☐ C-42 ☐ C-36 OTHER: C-57 — NUMBER: 467252 — EXPIRATION DATE: 12-31-04

WATER TABLE DEPTH: ____ ft — GEOGRAPHICAL INFORMATION: Coordinates X ____ Y ____

☒ PERC TEST (S) — NUMBER: 1 — LAND USE APPLICATION #: PA-04-137

TYPE OF WORK: ☐ NEW INSTALLATION ☐ REPAIR/ADDITION ☐ ENGINEER DESIGNED/ALTERNATIVE ☐ REPLACEMENT ____ ☐ DESTRUCTION ____

INSTALLATION WILL SERVE: ☐ RESIDENCE ☐ COMMERCIAL ☐ OTHER ____

NUMBER OF LIVING UNITS: ____ NUMBER OF BEDROOMS: ____ NUMBER OF EMPLOYEES: ____

☐ SEPTIC TANK — TYPE/MFG ____ CAPACITY ____ gal # OF COMPARTMENTS ____

☐ GREASE TRAP — TYPE/MFG ____ CAPACITY ____ gal # OF COMPARTMENTS ____

☐ PKG TX PLANT — DISTANCE TO NEAREST: WELL ____ ft FOUNDATION ____ ft PROPERTY LINE ____ ft

☐ LIFT STATION — SIZE ____ TYPE OF PUMP ____ ☐ SAND OIL SEPARATOR (ENCLOSED SYSTEM)

☐ LEACH LINES ☐ LEACHING CHAMBERS ____ # OF LINES ____ LENGTH OF LINES ____ ft

DISTANCE TO NEAREST WELL ____ ft FOUNDATION ____ ft PROPERTY LINE ____ ft

☐ FILTER BED — WIDTH ____ ft LENGTH ____ ft DEPTH ____ ft

DISTANCE TO NEAREST WELL ____ ft FOUNDATION ____ ft PROPERTY LINE ____ ft

☐ MOUNDED — WIDTH ____ ft LENGTH ____ ft DEPTH ____ ft

DISTANCE TO NEAREST WELL ____ ft FOUNDATION ____ ft PROPERTY LINE ____ ft

☐ SUMPS — WIDTH ____ ft LENGTH ____ ft DEPTH ____ ft

DISTANCE TO NEAREST WELL ____ ft FOUNDATION ____ ft PROPERTY LINE ____ ft

☐ DISPOSAL PONDS — WIDTH ____ ft LENGTH ____ ft DEPTH ____ ft

DISTANCE TO NEAREST WELL ____ ft FOUNDATION ____ ft PROPERTY LINE ____ ft

☐ SEEPAGE PITS — WIDTH ____ ft LENGTH ____ ft DEPTH ____ ft

DISTANCE TO NEAREST WELL ____ ft FOUNDATION ____ ft PROPERTY LINE ____ ft

I HEREBY CERTIFY THAT I HAVE PREPARED THIS APPLICATION AND THE WORK WILL BE DONE IN ACCORDANCE WITH SAN JOAQUIN COUNTY ORDINANCES, STATE LAWS AND RULES AND REGULATIONS OF SAN JOAQUIN COUNTY.

MINIMUM 24 HOUR ADVANCE NOTICE REQUIRED FOR INSPECTIONS – PLEASE CALL (209) 953-7697

SIGNED: Ryan Olsen — TITLE: Staff Engineer — DATE: 5/20/04

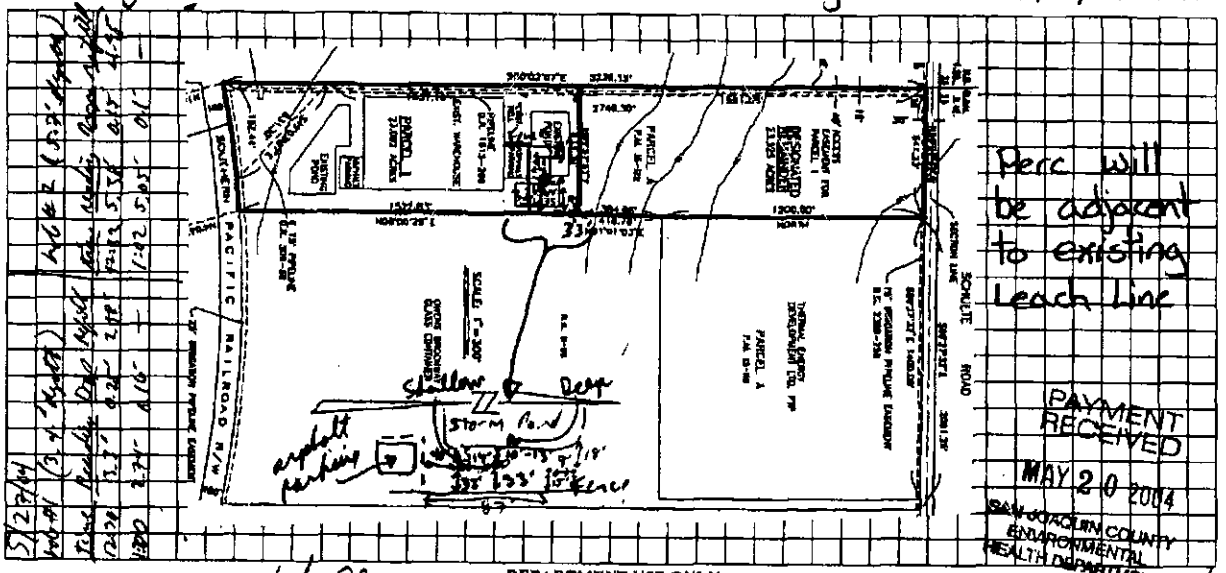

5/27/04 hole #1 (3.4' depth) Time Reading Drop Refill hole #2 (5.7' depth) time reading drop refill
12:30 3.3' 0.25' 2.48' 12:33 5.38' 0.15' 4.35'
1:00 2.74' 0.16' — 1:02 5.05' 0.1' —

DEPARTMENT USE ONLY

Application Accepted By: [signature] — Date: 5/20/04 — Area: 216 — Employee ID#: 1456 5/99

Final Inspection By: [signature] — Date: 5/21/04 — ☐ SPECIAL PERMIT - Approved by ____

Character of Soil to Depth of 3 Ft: ____ — Pit/Sump Soil Character: ____

COMMENTS hole #1 (3.4' depth) Time Reading Drop refill | hole #2 (10' depth) time reading drop refill
11:30 2.46' 0.01' — | 11:34 9' 0.02' —
12:00 2.48' 0.02' — | 12:04 9.04' 0.04' —

PE Code	SC INFO	Received By	Check#/Cash	Amount Remitted	Date	Permit/Service Request #	Invoice #	Permit ID#
42.22	521	KL	12134	$93.00	5/20/04	SR0038090		

5/21/04 storm pond [illegible] the shorted [illegible] containing the storm pond

6

JOB ADDRESS: _____ **PERMIT #:** _____

LICENSED CONTRACTORS DECLARATION

I hereby affirm that I am licensed under the provisions of Chapter 9 (commencing with Section 7000) of Division 3 of the Business and Professions Code and my license is in full force and effect.

License # _____ **Expiration Date** _____

Date _____ **Contractor** _____

OWNER-BUILDER DECLARATION

I hereby affirm that I am exempt from the Contractor's License Law for the following reason (Section 7031.5, Business and Professions Code: Any city or county which requires a permit to construct, alter, improve, demolish, or repair any structure, prior to its issuance, also requires the applicant for such permit to file a signed statement that he is licensed pursuant to the provisions of the Contractor's License Law (Chapter 9 (commencing with Section 7000) of Division 3 of the Business and Professions Code) or that he is exempt therefrom and the basis for the alleged exemption. Any violation of Section 7031.5 by any applicant for a permit subjects the applicant to a civil penalty of not more than five hundred dollars ($500)):

☐ I, as owner of the property, or my employees with wages as their sole compensation, will do the work, and the structure is not intended or offered for sale (Section 7044, Business and Professions Code: The contractor's License Law does not apply to an owner of property who builds or improves thereon, and who does such work himself or through his own employees, provided that such improvements are not intended or offered for sale. If, however, the building or improvement is sold within one year of completion, the owner-builder will have the burden of proving that he did not build or improve for the purpose of sale.)

☐ I, as owner of the property, am exclusively contracting with licensed contractors to construct the project (Section 7044, Business and Professions Code (B&PC): The Contractor's License Law does not apply to an owner of property who builds or improves hereon, and who constructs for such projects with a contractor(s) licensed pursuant to the Contractor's License Law.)

☐ I am exempt under Section _____ , B&PC for this reason _____

_____

Date: _____ **Owner** _____

WORKERS' COMPENSATION DECLARATION

I hereby affirm that I have a certificate of consent to self-insure, or a certificate of Workers' Compensation Insurance, or a certified copy thereof (Section 3800, Labor Code).

Expiration Date _____ **Company** _____

☐ Certified copy is hereby furnished

☐ Certified copy is filed with the Environmental Health Department

CERTIFICATE OF EXEMPTION FROM WORKERS' COMPENSATION INSURANCE

(This section need not be completed if the permit is for one hundred dollars ($100) or less)

I certify that in the performance of the work for which this permit is issued, I shall not employ any person in any manner so as to become subject to the Workers' Compensation Laws of California.

Date: _____ **Applicant** _____

NOTICE TO APPLICANT: If, after making this Certificate of Exemption, you should become subject to the Workers' Compensation provisions of the Labor Code, you must forthwith comply with such provisions or this permit shall be deemed revoked.

CONSTRUCTION LENDING AGENCY

I hereby affirm that there is a construction lending agency for the performance of the work for which this permit is issued (Section 3097, Civil Code).

Lender's Name _____

Lender' Address _____

DIVISION OF INDUSTRIAL SAFETY PERMIT CERTICATION

☐ I hereby certify that no excavation five (5) or more feet in depth into which a person is required to descend, will be made in connection with work authorized by the permit, and that no building structure, scaffolding, falsework, or demolition or dismantling thereof, will be more than thirty-six (36) feet high. (Chapter 3.2, Group 2, Article 2, Section 341, Title 8, California Administrative Code).

☐ As owner-builder, I will not employ anyone to do work which would require a permit from the Division of Industrial Safety, as noted above, unless such person has a permit to do such work from the division.

☐ Division of Industrial Safety Permit # _____

I certify that I have read this application and state that the above information is correct. I agree to comply with all city and county ordinances and state laws relating to well construction and or sewage system construction, and hereby authorize representatives of this county to enter upon the above-mentioned property for inspection purposes.

Date _____ **Applicant** _____

APPENDIX F
14800 W Schulte Manufacturer Submittals

5635 West Las Positas Blvd, Suite 406
Pleasanton, CA 94588

(925) 227-0700
FAX (925) 227-0703
License #99031

TO: **Kier & Wright**
Attn: **Garrett Readler**

TRANSMITTAL LETTER

DATE: **December 10, 2020**

PROJECT NAME: **LBA - Tracy Logistics Center III**

DATE REQUIRED: **December 17, 2020**

WE TRANSMIT:

[X] HEREWITH
[ ] IN ACCORDANCE WITH YOUR REQUEST

[X] **VIA E-MAIL**

TOTAL NO. OF PAGES: **48**
(INCLUDING THIS SHEET)

FOR YOUR:

[X] APPROVAL
[ ] REVIEW & COMMENT
[ ] NECESSARY ACTION
[ ] CORRECTION & RESUBMITAL
[ ] RECORD
[ ] INFORMATION
[ ] _____

THE FOLLOWING:

[ ] PRINTS
[ ] SPECIFICATIONS
[ ] SHOP DRAWING PRINTS
[ ] SHOP DRAWING REPRODUCIBLES
[ ] CHANGE ORDER
[ ] SAMPLES
[X] PRODUCT LITERATURE
[ ] _____
[ ] _____

PREPARED BY: **Howk Fire Systems**

QTY	DATED	STATUS*	SPEC SECT.	LOCATION	SPECIFIC DESCRIPTION	Phase/Seq./Rev.
1			332100		Domestic Well Pump Product Data Revised	332100-002-01

*** STATUS: A - APPROVED/APPROVED AS NOTED; R - REVISE & RESUBMIT**

REMARKS _____

COPIES TO:
(WITH ENCLOSURES)

[x] **FILE**
[x] **FIELD**
[ ]
[ ]
[ ]

MILLIE and SEVERSON, INCORPORATED

Charles Daggs

Charles Daggs, Project Manager

JOB # 10030.01

LBA- Tracy Logistics Center III
SUBMITTAL APPROVAL PAGE

SUBMITTAL INFORMATION		MILLIE AND SEVERSON, INC.	
Specifications Section	332100	REVIEWED FOR GENERAL ACCEPTANCE ONLY. THIS REVIEW DOES NOT RELIEVE SUBCONTRACTOR OF RESPONSIBILITY FOR MAKING THE WORK CONFORMS TO THE REQUIREMENTS OF THE CONTRACT. THE SUBCONTRACTOR IS RESPONSIBLE FOR ALL DIMENSIONS, CORRECT FABRICATION AND ACCURATE FIT WITH THE WORK OF THE OTHER TRADES.	
Total No. of Pages	47		
General Contractor Comments:		DATE	12/10/20
•		BY	Charles Daggs
		SUBMITTAL	332100-002-01
Ware Malcomb APPROVAL / COMMENTS		APPROVAL / COMMENTS	

SUBMITTAL NO. ___09___ October 9, 2020

PROJECT

PROJECT & NO.
Millie & Severson
Schulte Rd. Domestic Well

OWNER PROJECT NO.

CONTRACTOR PROJECT NO.

ITEM NO.	COPIES	DESCRIPTION	PREVIOUS SUBMITTAL NO.	SPEC. SECTION NO.	PLAN SHEET NO.
1	1	Domestic Well Submittals			

SUBMITTAL RETURN (TO BE COMPLETED BY ENGINEER)

ITEM NO.	COPIES	RESUBMIT		COMMENTS
		YES	NO	

COPY:

RETURNED BY:_____ _____
ENGINEER DATE

Well Seal (Steel plate, one hole, 1/2" vent tap)

Size	Drop Pipe	Cable Hole	Top Plate	Max Load #	ADQ	Order No.
4"	1"	3/4"	3/16"	2100	12	PH4-1
	1-1/4"	3/4"	3/16"	2100	12	PH4-125
	1-1/2"	3/4"	3/16"	2100	12	PH4-15
	2"	3/4"	3/16"	2100	12	PH4-2
5"	1"	1"	3/16"	1500	12	PH5-1
	1-1/4"	1"	3/16"	1500	12	PH5-125
	1-1/2"	1"	3/16"	1500	12	PH5-15
	2"	1"	3/16"	1500	12	PH5-2
6"	1"	1"	3/16"	1100	8	PH6-1
	1-1/4"	1"	3/16"	1100	8	PH6-125
	1-1/2"	1"	3/16"	1100	8	PH6-15
	2"	1"	3/16"	1100	8	PH6-2
6" Heavy Duty	1"	1"	3/8"	9000	8	PH6-1HD
	1-1/4"	1"	3/8"	9000	8	PH6-125HD
	1-1/2"	1"	3/8"	9000	8	PH6-15HD
	2"	1"	3/8"	9000	8	PH6-2HP
	3"	1"	3/8"	9000	8	PH6-3HD
6-1/4"	1"	1"	3/16"	1100	8	PH6-1X
	1-1/4"	1"	3/16"	1100	8	PH6-125X
	1-1/2"	1"	3/16"	1100	8	PH6-15X
	2"	1"	3/8"	9000	8	PH6-2X
7"	1"	1-1/4"	3/8"	2000	6	PH7-1
	1-1/4"	1-1/4"	3/8"	2000	6	PH7-125
	1-1/2"	1-1/4"	3/8"	9000	6	PH7-15
	2"	1-1/4"	3/8"	9000	6	PH7-2
	3"	1-1/4"	3/8"	9000	6	PH7-3
8"	1"	1-1/4"	3/8"	6900	4	PH8-1
	1-1/4"	1-1/4"	3/8"	6900	4	PH8-125
	1-1/2"	1-1/4"	3/8"	6900	4	PH8-15
	2"	1-1/4"	3/8"	6900	4	PH8-2
	2-1/2"	1"	3/8"	6900		PH8-25
	3"	1-1/4"	1/2"	12000	4	PH8-3
	4"	1-1/4"	5/8"	27000	4	PH8-4
10"	1"	1-1/4"	3/8"	2800	3	PH10-1
	1-1/4"	1-1/4"	3/8"	2800	3	PH10-125
	1-1/2"	1-1/4"	3/8"	2800	3	PH10-15
	2"	1-1/4"	3/8"	2800	3	PH10-2
	3"	1-1/4"	5/8"	16500	3	PH10-3
	4"	1-1/4"	5/8"	16500	3	PH10-4
	5"	1"	3/4"	32000		SIM3567
	6"	1"	3/4"	34000	3	PH10-6
12"	1"	1-1/4"	3/8"	2800	2	PH12-1
	1-1/4"	1-1/4"	3/8"	2800	2	PH12-125
	1-1/2"	1-1/4"	3/8"	2800	2	PH12-15
	2"	1-1/4"	1/2"	6600	2	PH12-2
	2-1/2"	1"	5/8"	12000		PH12-25
	3"	1-1/4"	5/8"	12000	2	PH12-3
	4"	1-1/4"	5/8"	12000	2	PH12-4
	5"	1-1/4"	3/4"	22000	2	PH12-5
	6"	1-1/4"	3/4"	22000	2	PH12-6
14"	4"	1-1/4"	3/4"	16000		PH14-4
	6"	1-1/4"	1"	40000		PH14-6

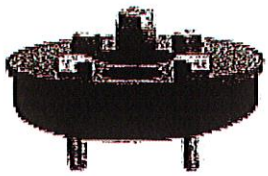

Heat Shrink Splice Kits

Mfg Part No.	Wire AWG	Description	ADQ	Order No.
SP12C	10-12-14	12 Pak-Clear	20	ES-SP12C
SP4C	10-12-14	4 Wire-Clear	50	ES-SP4C
SP8C-4	8		50	ES-SP8C-4
SP6C-HD4	6		20	ES-SP6C-HD4
SP#4C-HD4	4		20	ES-SP#4C-HD4
SP#2C-HD4	2		12	ES-SP#2C-HD4
SP#1/0-HD4	1/0	4 Wire-Black		ES-SP#1/0-HD4
SP#2/0-HD4	2/0			ES-SP#2/0-HD4
SP#3/0-HD4	3/0			ES-SP#3/0-HD4
SP#4/0-HD4	4/0			ES-SP#4/0-HD4
SP250MCM	250 MCM			MAHS4-250MCMHD
SP350MCM	350 MCM			MAHS4-350MCMHD
SP500MCM	500 MCM			MAHS4-500MCMHD
ETHGC-400-48	#14-8	48" Clear tubing	10	ES-ETHGC-400-48

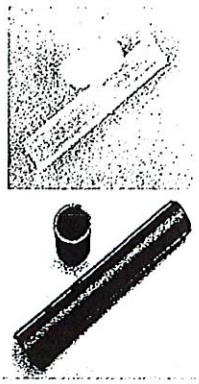

Impact Crimper

Model	Description	Qty	Order No.
IC6-4	Crimps #6 to #4/0tt Wire		ES-KIC10

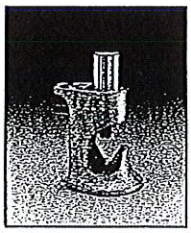

Sta-Kons/Butt Connectors

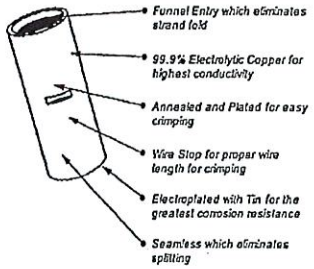

AWG	Pkg Qty	Order No.
16-14	50	ES-BO16-50
10-12	50	ES-BO12-50
8	10	ES-BO8
6	10	ES-BO6
4	10	ES-BO4
2	10	ES-BO2-10

1/0	each	ES-BO1/0
2/0	each	ES-BO2/0
3/0	each	ES-BO3/0
4/0	each	ES-BO4/0

Cable Ties

Type and Description	Length	Bag Qty	Order No.
Natural Nylon Cable Ties	14"	10	MACT66505

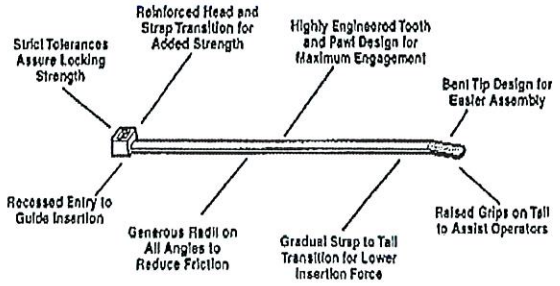

PREFERRED PUMP

Submersible Cable

PVC Flat Jacketed W/ Ground

AWG	Strands	Design	Wt / 1000'	Order No.
14/2	19	Flat Jacket 2-wires + ground	68# / 1000' 34# / 500'	PC14-241 PC14-241F
12/2	19		131# / 1000' 66# / 500'	PC12-241 PC12-241F
10/2	19		186# / 1000' 93# / 500'	PC10-241 PC10-241F
8/2	19		275# / 1000' 138# / 500'	PC8-241 PC8-241F
14/3	19	Flat Jacket 3-wires + ground	124# / 1000' 62# / 500'	PC14-341 PC14-341F
12/3	19		161# / 1000' 81# / 500'	PC12-341 PC12-341F
10/3	19		246# / 1000' 123# / 500'	PC10-341 PC10-341F
8/3	19		342# / 1000' 171# / 500'	PC8-341 PC8-341F
6/3	19		591# / 1000' 296# / 500'	PC6-341 PC6-341F
4/3	19		706# / 1000' 353# / 500'	PC4-341 PC4-341F
2/3	19		1059# / 1000' 530# / 500'	PC2-341 PC2-341F
1/0	19		1612# / 1000' 806# / 500'	PC1/0-341 PC1/0-341F
2/0	19		1931# / 1000' 966# / 500'	PC2/0-041 PC2/0-341F

We stock cable in 500' and 1000' reels. If you require a custom length, add $45.00 NET.

PVC Twisted W/ Ground

AWG	Strands	Design	Wt / 1000'	Order No.
12/2	Solid	Twisted 2-wires + ground	96# / 1000' 48# / 500'	PC12-211 PC12-211F
10/2	Solid		138# / 1000' 69# / 500'	PC10-211 PC10-211F
8/2	Solid		190# / 1000' 95# / 500'	PC8-211 PC8-211F
14/3	Solid	Twisted 3-wires + ground	87# / 1000' 44# / 500'	PC14-311 PC14-311F
12/3	Solid		122# / 1000' 61# / 500'	PC12-311 PC12-311F
10/3	Solid		176# / 1000' 88# / 500'	PC10-311 PC10-311F
8/3	19		266# / 1000' 133# / 500'	PC8-311 PC8-311F
6/3	19		398# / 1000' 199# / 500'	PC6-311 PC6-311F
4/3	19		558# / 1000' 279# / 500'	PC4-311 PC4-311F
2/3	19		876# / 1000' 438# / 500'	PC2-311 PC2-311F

For Pre-cut REMNANT footage, add "R" to the end of 1000' part number.

Phone: (260) 482-4366 | Email: sales@strataflo.com

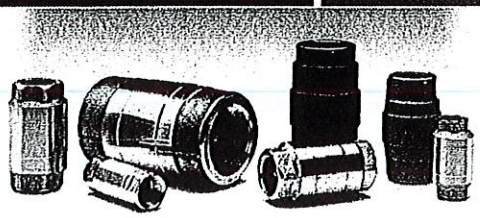

No. F352

Lead-Free Double-Tapped

DESCRIPTION

Certified to NSF/ANSI 372

Now offering our same high quality valves with lead-free materials, certified by NSF to contain less than 0.25% lead by weighted average. The lead-free series is compliant with CA, LA, MD, VT state laws and U.S. Safe Water Drinking Act. The lead-free line comes standard with a Buna-S rubber poppet, an extremely durable compound for use with potable drinking water. All other internal components of stainless steel. Each valve is tested twice for casting integrity and backflow prevention. All valves are 100% American-Made and built to last.

APPLICATION

Double-tapped check valve is generally used for submersible pump installations or when it is necessary to attach a pressure switch, pressure gauge, snifter valve, drain or blow lines, or adding chemicals.

Flow Rate (Cv)

Size	GPM
1"	14
1-1/4"	21
1-1/2"	38
2"	59
2-1/2"	69
3" *	185
3" **	69
4"	240

Cv is flow (GPM) with a 1 psi differential pressure.

Material Specifications

Part Name	Material
Body	Cast Bronze C89833 or C87500
Stem	303 Stainless Steel
Poppet	Buna-S Rubber
Spring	302 Stainless Steel
Cup Washer	304 Stainless Steel
Locknut	18/8 Stainless Steel
Country of Origin	Made in the USA

Operational Specifications

Max. Temperature	225°F
Working Pressure	400 psi
Cracking Pressure	1-2 lbs.
Opt. Cracking Pressure	1/2, 5, or 10 lbs.

Dimensions

Pipe Size	Part Number	Over-all Length	Valve Diameter	Valve Weight
1"	F352-100	3.69"	2.00"	1.25 lbs.
1-1/4"	F352-125	4.57"	2.41"	2.00 lbs.
1-1/2"	F352-150	4.88"	2.69"	2.45 lbs.
2"	F352-200	5.56"	3.34"	3.90 lbs.
2-1/2"	F352-250	6.79"	3.81"	7.15 lbs.
3" *	F352-300-F	7.40"	4.71"	11.80 lbs.
3" **	F352-300	6.79"	3.81"	8.15 lbs.
4"	F352-400	10.00"	5.80"	21.70 lbs.

NPT threaded. **New valve: Standard female threads on both ends, Cv factor of 185. **Original valve: 2-1/2" valve body with 3" male thread on both ends, Cv factor of 69.

NOTES

Questions? Ready to Order? (260) 482-4366

Strataflo is ISO 9001:2015 Registered

© 2018 Strataflo Products Inc. All Rights Reserved. Strataflo Products Inc. P.O. Box 8298 • Fort Wayne, IN 46898 260-482-4366 | sales@strataflo.com

CHARMAN MANUFACTURING

Tel: 1-213-489-7000 Toll Free: 877-526-5252
Fax:1-213-489-7075 Toll Free: 877-526-5257
5681 SOUTH DOWNEY ROAD
VERNON, CA 90058
Email: sales@charminc.com
web: www.charmaninc.com

October 2018

Freight Terms: $1500 Net FFA

Payment Terms: Net 30 Days

Brass Gate and Swing Check Valves Full Port - Lead Free

Item#	Description	Net Price
1001-NL	IPS FULL PORT GATE VALVE 1/2"	3.510
1002-NL	IPS FULL PORT GATE VALVE 3/4"	4.560
1003-NL	IPS FULL PORT GATE VALVE 1"	7.066
1004-NL	IPS FULL PORT GATE VALVE 1-1/4"	10.833
1005-NL	IPS FULL PORT GATE VALVE 1-1/2"	13.500
1006-NL	IPS FULL PORT GATE VALVE 2"	20.386
1007-NL	IPS FULL PORT GATE VALVE 2-1/2"	32.900
1008-NL	IPS FULL PORT GATE VALVE 3"	44.644
1009-NL	IPS FULL PORT GATE VALVE 4"	75.533
1021-NL	CC FULL PORT GATE VALVE 1/2" LF	3.061
1022-NL	CC FULL PORT GATE VALVE 3/4" LF	4.560
1023-NL	CC FULL PORT GATE VALVE 1" LF	6.734
1024-NL	CC FULL PORT GATE VALVE 1-1/4" LF	10.424
1025-NL	CC FULL PORT GATE VALVE 1-1/2" LF	12.970
1026-NL	CC FULL PORT GATE VALVE 2" LF	21.331

Brass Gate Valves Full Port Lead Free

Item#	Description	Net Price
1101-NL	BRASS CHECK VALVE LEAD FREE (IPS) 1/2"	3.064
1102-NL	BRASS CHECK VALVE LEAD FREE (IPS) 3/4"	4.371
1103-NL	BRASS CHECK VALVE LEAD FREE (IPS) 1"	6.160
1104-NL	BRASS CHECK VALVE LEAD FREE (IPS) 1-1/4"	10.864
1105-NL	BRASS CHECK VALVE LEAD FREE (IPS) 1-1/2"	12.444
1106-NL	BRASS CHECK VALVE LEAD FREE (IPS) 2"	19.289
1107-NL	BRASS CHECK VALVE LEAD FREE (IPS) 2-1/2"	43.244
1108-NL	BRASS CHECK VALVE LEAD FREE (IPS) 3"	59.889
1121-NL	BRASS CHECK VALVE LEAD FREE (CC) 1/2"	2.676
1122-NL	BRASS CHECK VALVE LEAD FREE (CC) 3/4"	4.200
1123-NL	BRASS CHECK VALVE LEAD FREE (CC) 1"	6.067
1124-NL	BRASS CHECK VALVE LEAD FREE (CC) 1-1/4"	9.349
1125-NL	BRASS CHECK VALVE LEAD FREE (CC) 1-1/2"	12.802
1126-NL	BRASS CHECK VALVE LEAD FREE (CC) 2"	19.802

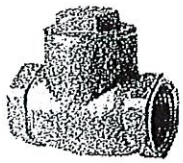

Brass Swing Check Valves Full Port Lead Free

May be combined with other products to achieve freight paid level

For Information and to Place Orders:
Please Contact

K&S Enterprises
Brentwood, CA 94513
(925) 240-0512
Fax: (925) 240-0513
email: kandsreps@yahoo.com

IAPMO RESEARCH AND TESTING, INC.

5001 East Philadelphia Street, Ontario, California 91761-2816 – USA • 909-472-4100 • 909-472-4244 • www.iapmort.org

ANSI ACCREDITED ISO/IEC 17065 Product Certification Body #0202

SCC Accredited CB-P/S OCPS Accrédité OCN

LEAD FREE

CERTIFICATE OF LISTING

IAPMO Research and Testing, Inc. is a product certification body which tests and inspects samples taken from the supplier's stock or from the market or a combination of both to verify compliance to the requirements of applicable codes and standards. This activity is coupled with periodic surveillance of the supplier's factory and warehouses as well as the assessment of the supplier's Quality Assurance System. This listing is subject to the conditions set forth in the characteristics below and is not to be construed as any recommendation, assurance or guarantee by IAPMO Research and Testing, Inc. of the product acceptance by Authorities Having Jurisdiction.

This certificate is not evidence of current listing. To verify listing status, visit the IAPMO R&T Product Listing Directory at pld.iapmo.org

Effective Date: December 2019 Void After: December 2024

Product: Lead Free Plumbing Products File No. 6447

Issued To: Zhejiang Fdh Brass Industrial Co. Ltd
Qinggang Sic Tech Ind Yuhuan
Taizhou, Zhejiang
Taizhou,
China

Identification: Each product shall bear permanent and legible markings to identify the manufacturer. This marking shall be the trade name, trademark, or other mark known to identify the manufacturer. The product shall bear the appropriate IAPMO R&T certification mark. The product may also bear either "Lead Free" or "Low Lead" above or in close proximity to the IAPMO R&T certification mark.

Characteristics: Products may include any pipe, pipe fitting, solder, flux, or other plumbing products providing water for human consumption. Products listed below are to be installed in accordance with the manufacturer's instruction. These products have been verified with weighted average lead content <=0.25%; Solder and flux lead content <=0.2%.

Products listed on this certificate have been tested by an IAPMO R&T recognized laboratory. This recognition has been granted based upon the laboratory's compliance to the applicable requirements of ISO/IEC 17025.

Chairman, Product Certification Committee

CEO, The IAPMO Group

IAPMO RESEARCH AND TESTING, INC. NON-PROFIT OCTOBER 28 1964 CORPORATION CALIFORNIA

This listing period is based upon the last date of the month indicated on the Effective Date and Void After Date shown above. Any change in material, manufacturing process, marking or design without having first obtained the approval of the Product Certification Committee, or any evidence of non-compliance with applicable codes and standards or of inferior workmanship, may be deemed sufficient cause for revocation of this listing. Production of or reference to this form for advertising purposes may be made only by specific written permission of IAPMO Research and Testing, Inc. Any alteration of this certificate could be grounds for revocation of the listing. This document shall be reproduced in its entirety.

IAPMO RESEARCH AND TESTING, INC.

CERTIFICATE OF LISTING

LEAD FREE

Void After: December 2024

Product: Lead Free Plumbing Products

File No. 6447

Issued To: Zhejiang Fdh Brass Industrial Co. Ltd

Products are in compliance with the following standard(s):

Section 1417(d) of the Safe Drinking Water Act

The lead content requirements of Section 116875 of the California Health & Safety Code

IAPMO RESEARCH AND TESTING, INC.

CERTIFICATE OF LISTING

LEAD FREE

This certificate is not evidence of current listing. To verify listing status, visit the IAPMO R&T Product Listing Directory at pld.iapmo.org

Void After: December 2024

Product: Lead Free Plumbing Products

File No. 6447

Issued To: Zhejiang Fdh Brass Industrial Co. Ltd

MODELS:

Model No.	Description
100-003	GATE VALVE (200 PSI NPT) 1/2"
100-004	GATE VALVE (200 PSI NPT) 3/4"
100-005	GATE VALVE (200 PSI NPT) 1"
100-006	GATE VALVE (200 PSI NPT) 1-1/4"
100-007	GATE VALVE (200 PSI NPT) 1-1/2"
100-008	GATE VALVE (200 PSI NPT) 2"
100-009	GATE VALVE (200 PSI NPT) 2-1/2"
100-010	GATE VALVE (200 PSI NPT) 3"
100-202	GATE VALVE (300 PSI NPT) 3/8"
100-203	GATE VALVE (300 PSI NPT) 1/2"
100-204	GATE VALVE (300 PSI NPT) 3/4"
100-205	GATE VALVE (300 PSI NPT) 1"
100-206	GATE VALVE (300 PSI NPT) 1-1/4"
100-207	GATE VALVE (300 PSI NPT) 1-1/2"
100-208	GATE VALVE (300 PSI NPT) 2"
100-209	GATE VALVE (300 PSI NPT) 2-1/2"
100-210	GATE VALVE (300 PSI NPT) 3"
100-403	COMPACT GATE VALVE NPT 1/2"
100-404	COMPACT GATE VALVE NPT 3/4"
100-405	COMPACT GATE VALVE NPT 1"
100-406	COMPACT GATE VALVE NPT 1-1/4"
100-407	COMPACT GATE VALVE NPT 1-1/2"
100-408	COMPACT GATE VALVE NPT 2"
100-409	COMPACT GATE VALVE NPT 2-1/2"
100-410	COMPACT GATE VALVE NPT 3"
100-453	COMPACT GATE VALVE CXC 1/2"
100-454	COMPACT GATE VALVE CXC 3/4"
100-455	COMPACT GATE VALVE CXC 1"
100-456	COMPACT GATE VALVE CXC 1-1/4"
100-457	COMPACT GATE VALVE CXC 1-1/2"
100-458	COMPACT GATE VALVE CXC 2"
100-503	GATE VALVE (200 PSI C×C) 1/2"
100-504	GATE VALVE (200 PSI C×C) 3/4"
100-505	GATE VALVE (200 PSI C×C) 1"
100-506	GATE VALVE (200 PSI C×C) 1-1/4"
100-507	GATE VALVE (200 PSI C×C) 1-1/2"
100-508	GATE VALVE (200 PSI C×C) 2"
100-703	GATE VALVE (300 PSI C×C) 1/2"
100-704	GATE VALVE (300 PSI C×C) 3/4"
100-705	GATE VALVE (300 PSI C×C) 1"
100-706	GATE VALVE (300 PSI C×C) 1-1/4"
100-707	GATE VALVE (300 PSI C×C) 1-1/2"
100-708	GATE VALVE (300 PSI C×C) 2"
100-709	GATE VALVE (300 PSI C×C) 2-1/2"
100-710	GATE VALVE (300 PSI C×C) 3"

IAPMO RESEARCH AND TESTING, INC.

CERTIFICATE OF LISTING

LEAD FREE

This certificate is not evidence of current listing. To verify listing status, visit the IAPMO R&T Product Listing Directory at pld.iapmo.org

Void After: December 2024

Product: Lead Free Plumbing Products

File No. 6447

Issued To: Zhejiang Fdh Brass Industrial Co. Ltd

100-005	SWING CHECK VALVE (NPT) 1"
100-006	SWING CHECK VALVE (NPT) 1-1/4"
100-008	SWING CHECK VALVE (NPT) 2"
100-009	SWING CHECK VALVE (NPT) 2-1/2"
100-010	SWING CHECK VALVE (NPT) 3"
100-504	SWING CHECK VALVE (C×C) 3/4"
100-505	SWING CHECK VALVE (C×C) 1"
100-506	SWING CHECK VALVE (C×C) 1-1/4"
100-507	SWING CHECK VALVE (C×C) 1-1/2"
100-508	SWING CHECK VALVE (C×C) 2"
101-003	SWING CHECK VALVE (NPT) 1/2"
101-004	SWING CHECK VALVE (NPT) 3/4"
101-503	SWING CHECK VALVE (C×C) 1/2"
101-510	SWING CHECK VALVE (CXC) 3"
F102	Brass Spring in line Check Valve (1/2", 3/4", 1", 1-1/4", 1-1/2", 2")
F401B	Brass Foot Valve (1/2", 3/4", 1", 1-1/4", 1-1/2", 2")
F906	Brass Meter Coupling with loop (1/2"X3/4", 3/4"x1", 1x1-1/4")
F906H	Brass Meter Coupling with loop (1/2"X3/4", 3/4"x1", 1x1-1/4")

Model No.	Description	Size
F610NPT	200WOG GATE VALVE IPS	1/4", 3/8", 1/2", 3/4", 1", 1-1/4", 1-1/2", 2", 2-1/2", 3", 4"
F610CXC	200WOG GATE VALVE CXC	1/2", 3/4", 1", 1-1/4", 1-1/2", 2"
F501H NPT	200WOG SWING CHECK VALVE IPS	1/4", 3/8", 1/2", 3/4", 1", 1-1/4", 1-1/2", 2", 2-1/2", 3", 4"
F501H CX	200WOG SWING CHECK VALVE CXC	1/2", 3/4",1", 1-1/4", 1-1/2", 2", 2-1/2", 3"
100-001NL	200WOG GATE VALVE IPS	1/4"
100-002NL	200WOG GATE VALVE IPS	3/8"
100-803NL	200WOG GATE VALVE COMPRESSION	1/2"
100-804NL	200WOG GATE VALVE COMPRESSION	3/4"
100-502NL	200WOG GATE VALVE CXC	3/8"

IAPMO RESEARCH AND TESTING, INC.

CERTIFICATE OF LISTING

LEAD FREE

This certificate is not evidence of current listing. To verify listing status, visit the IAPMO R&T Product Listing Directory at pld.iapmo.org

Void After: December 2024

Product: Lead Free Plumbing Products

File No. 6447

Issued To: Zhejiang Fdh Brass Industrial Co. Ltd

ADDITIONAL COMPANY INFO:

B&K LLC.

Model No.	Description
100-003NL	GATE VALVE (200 PSI NPT) 1/2"
100-004NL	GATE VALVE(200 PSI NPT) 3/4"
100-005NL	GATE VALVE(200 PSI NPT) 1"
100-006NL	GATE VALVE(200 PSI NPT) 1-1/4"
100-007NL	GATE VALVE(200 PSI NPT 1-1/2"
100-008NL	GATE VALVE(200 PSI NPT) 2"
100-009NL	GATE VALVE(200 PSI NPT) 2-1/2"
100-010NL	GATE VALVE(200 PSI NPT) 3"
100-202NL	GATE VALVE (300 PSI NPT) 3/8"
100-203NL	GATE VALVE (300 PSI NPT) 1/2"
100-204NL	GATE VALVE (300 PSI NPT) 3/4"
100-205NL	GATE VALVE (300 PSI NPT) 1"
100-206NL	GATE VALVE (300 PSI NPT) 1-1/4"
100-207NL	GATE VALVE (300 PSI NPT) 1-1/2"
100-208NL	GATE VALVE (300 PSI NPT) 2"
100-209NL	GATE VALVE (300 PSI NPT) 2-1/2"
100-210NL	GATE VALVE (300 PSI NPT) 3"
100-403EB	1/2" Compact Gate valve NPT
100-404EB	3/4" Compact Gate valve NPT
100-405EB	1" Compact Gate valve NPT
100-406EB	1-1/4" Compact Gate valve NPT
100-407EB	1-1/2" Compact Gate valve NPT
100-408EB	2" Compact Gate valve NPT
100-453EB	1/2" Compact Gate valve CXC
100-453NL	GATE VALVE(150 PSI C×C) 1/2"
100-454EB	3/4" Compact Gate valve CXC
100-455EB	1" Compact Gate valve CXC
100-403NL	COMPACT GATE VALVE NPT 1/2"
100-404NL	COMPACT GATE VALVE NPT 3/4"
100-405NL	COMPACT GATE VALVE NPT 1"
100-406NL	COMPACT GATE VALVE NPT 1-1/4"
100-407NL	COMPACT GATE VALVE NPT 1-1/2"
100-408NL	COMPACT GATE VALVE NPT 2"
100-409NL	COMPACT GATE VALVE NPT 2-1/2"
100-410NL	COMPACT GATE VALVE NPT 3"
100-453NL	COMPACT GATE VALVE CXC 1/2"
100-454NL	COMPACT GATE VALVE CXC 3/4"
100-455NL	COMPACT GATE VALVE CXC 1"
100-456NL	COMPACT GATE VALVE CXC 1-1/4"
100-457NL	COMPACT GATE VALVE CXC 1-1/2"
100-458NL	COMPACT GATE VALVE CXC 2"
100-503NL	GATE VALVE(200 PSI C×C) 1/2"

IAPMO RESEARCH AND TESTING, INC.

CERTIFICATE OF LISTING

LEAD FREE

This certificate is not evidence of current listing. To verify listing status, visit the IAPMO R&T Product Listing Directory at pld.iapmo.org

Void After: December 2024

Product: Lead Free Plumbing Products

File No. 6447

Issued To: Zhejiang Fdh Brass Industrial Co. Ltd

100-504NL	GATE VALVE(200 PSI C×C) 3/4"
100-505NL	GATE VALVE(200 PSI C×C) 1"
100-506NL	GATE VALVE(200 PSI C×C) 1-1/4"
100-507NL	GATE VALVE(200 PSI C×C) 1-1/2"
100-508NL	GATE VALVE(200 PSI C×C) 2"
100-703NL	GATE VALVE (300 PSI C×C) 1/2"
100-704NL	GATE VALVE (300 PSI C×C) 3/4"
100-705NL	GATE VALVE (300 PSI C×C) 1"
100-706NL	GATE VALVE (300 PSI C×C) 1-1/4"
100-707NL	GATE VALVE (300 PSI C×C) 1-1/2"
100-708NL	GATE VALVE (300 PSI C×C) 2"
100-709NL	GATE VALVE (300 PSI C×C) 2-1/2"
100-710NL	GATE VALVE (300 PSI C×C) 3"
101-003EB	1/2" Swing check valve NPT
101-003NL	SWING CHECK VALVE(NPT) 1/2"
101-004EB	3/4" Swing check valve NPT
101-004NL	SWING CHECK VALVE(NPT) 3/4"
101-005EB	1" Swing check valve NPT
101-005NL	SWING CHECK VALVE(NPT) 1"
101-006NL	SWING CHECK VALVE(NPT)) 1-1/4"
101-007NL	SWING CHECK VALVE(NPT) 1-1/2"
101-008NL	SWING CHECK VALVE(NPT) 2"
101-009NL	SWING CHECK VALVE(NPT) 2-1/2"
101-010NL	SWING CHECK VALVE(NPT) 3"
101-303NL	1/2" Brass Spring in_line Check Valve
101-304NL	3/4" Brass Spring in_line Check Valve
101-305NL	1" Brass Spring in_line Check Valve
101-306NL	1-1/4" Brass Spring in_line Check Valve
101-307NL	1-1/2" Brass Spring in_line Check Valve
101-308NL	2" Brass Spring in_line Check Valve
101-323NL	1/2" Brass Foot Valve
101-324NL	3/4" Brass Foot Valve
101-325NL	1" Brass Foot Valve
101-326NL	1-1/4" Brass Foot Valve
101-327NL	1-1/2" Brass Foot Valve
101-328NL	2" Brass Foot Valve
101-503EB	1/2" Swing check valve CXC
101-503NL	SWING CHECK VALVE(C×C) 1/2"
101-504EB	3/4" Swing check valve CXC
101-504NL	SWING CHECK VALVE(C×C) 3/4"
101-505EB	1" Swing check valve CXC
101-505NL	SWING CHECK VALVE(C×C) 1"
101-506NL	SWING CHECK VALVE(C×C) 1-1/4"
101-507NL	SWING CHECK VALVE(C×C) 1-1/2"
101-508NL	SWING CHECK VALVE(C×C) 2"
105-783NL	1/2"X3/4" Brass Meter Coupling with loop
105-784NL	3/4"x1" Brass Meter Coupling with loop
105-785NL	1"X1-1/4" Brass Meter Coupling with loop

IAPMO RESEARCH AND TESTING, INC.

CERTIFICATE OF LISTING

LEAD FREE

This certificate is not evidence of current listing. To verify listing status, visit the IAPMO R&T Product Listing Directory at pld.iapmo.org

Void After: December 2024

Product: Lead Free Plumbing Products

File No. 6447

Issued To: Zhejiang Fdh Brass Industrial Co. Ltd

Phone: (260) 482-4366 | Email: sales@strataflo.com

No. F325

Lead-Free Check Valve for Submersible Pumps

DESCRIPTION

Certified to NSF/ANSI 372

Now offering our same high quality valves with lead-free materials, certified by NSF to contain less than 0.25% lead by weighted average. The lead-free series is compliant with CA, LA, MD, VT state laws and U.S. Safe Water Drinking Act. The lead-free line comes standard with a Buna-S rubber poppet, an extremely durable compound for use with potable drinking water. All other internal components of stainless steel. Each valve is tested twice for casting integrity and backflow prevention. All valves are 100% American-Made and built to last.

APPLICATION

Used as all purpose check valve for multiple applications, including cold and warm water, ethylene, and glycol.

Flow Rate (Cv)

Size	GPM
1" *	8
1-1/4"	21
2"	59

Cv is flow (GPM) with a 1 psi differential pressure.

Material Specifications

Part Name	Material
Body	Cast Bronze C89833 or C87500
Stem	303 Stainless Steel
Poppet	Buna-S Rubber
Spring	302 Stainless Steel
Cup Washer	304 Stainless Steel
Locknut	18/8 Stainless Steel
Country of Origin	Made in the USA

Operational Specifications

Max. Temperature	225°F
Working Pressure	400 psi
Cracking Pressure	1-2 lbs.
Opt. Cracking Pressure	1/2, 5, or 10 lbs.

Dimensions

Pipe Size	Part Number	Over-all Length	Valve Diameter	Valve Weight
1" *	F325-100	3.69"	2.00"	1.25 lbs.
1-1/4"	F325-125	4.56"	2.41"	1.95 lbs.
2"	F325-200	5.57"	3.34"	3.45 lbs.

All valves Male Inlet x Female Outlet NPT threads. * 1-1/4" Male x 1" Female threads

NOTES

Questions? Ready to Order? (260) 482-4366

Strataflo is ISO 9001:2015 Registered

© 2018 Strataflo Products Inc. All Rights Reserved. Strataflo Products Inc. P.O. Box 8298 • Fort Wayne, IN 46898 260-482-4366 | sales@strataflo.com

FLEXCON INDUSTRIES®

A Swan Group Company

SUBMITTAL

WR-SERIES

HYDRO-PNEUMATIC TANKS

Models: WR 530-A thru WR 570-A
Submittal Sheet No.

Date: 5/18

Job Name	_____	Submitted By	_____	Date	_____
Location	_____	Approved By	_____	Date	_____
	_____	Order No.	_____	Date	_____
Engineer	_____	Notes	_____		
Contractor	_____		_____		
Sales Rep.	_____		_____		

Description

Flexcon type WR tanks are ASME replaceable bladder type pre-charged hydro-pneumatic tanks for commercial and industrial well and water systems, booster systems, or other potable water applications. They are designed to deliver water under pressure between pump cycles to provide sufficient flow to meet demands. The water is contained in a butyl bladder. All WR hydro-pneumatic tanks can be installed vertically or horizontally.

Construction

Shell: Carbon Steel
Bladder: Heavy Duty Butyl
FDA Approved
NSF 61 Listed
System Connection: Epoxy lined

Performance Limitations

Maximum Design Temperature: 240°F / 115.6 C
Maximum Design Pressure: 125 PSIG* / 862 kpa

Model Number	Wessels Model	Tank Volume (Gal/L)	Tagging Information	Quantity
WR 530-A	FXA-1000	264/998		
WR 540-A	FXA-1200	317/1198		
WR 550-A	FXA-1400	370/1399		
WR 560-A	FXA-1600	422/1595		
WR 570-A	FXA-2000	528/1996		

NSF

61
Listed
Materials

Typical Specification

Furnish and install, as shown on plans, a _____ gallon _____" diameter X _____" (high) pre-charged steel hydro-pneumatic tank with replaceable heavy-duty butyl bladder. The tank shall have NPT epoxy lined system connections and a 0.302"-32 charging valve connection (standard tire valve) to facilitate the on-site charging of the tank to meet system requirements. The tank must be constructed in accordance with most recent addendum of Section VIII Division 1 of the ASME Boiler and Pressure Vessel Code.

Each tank shall be Flexcon model number WR _____-A or approved equal.

300 Pond St • Randolph, MA 02368 • 800-527-0030 • 781-986-2029 FAX • www.flexconind.com

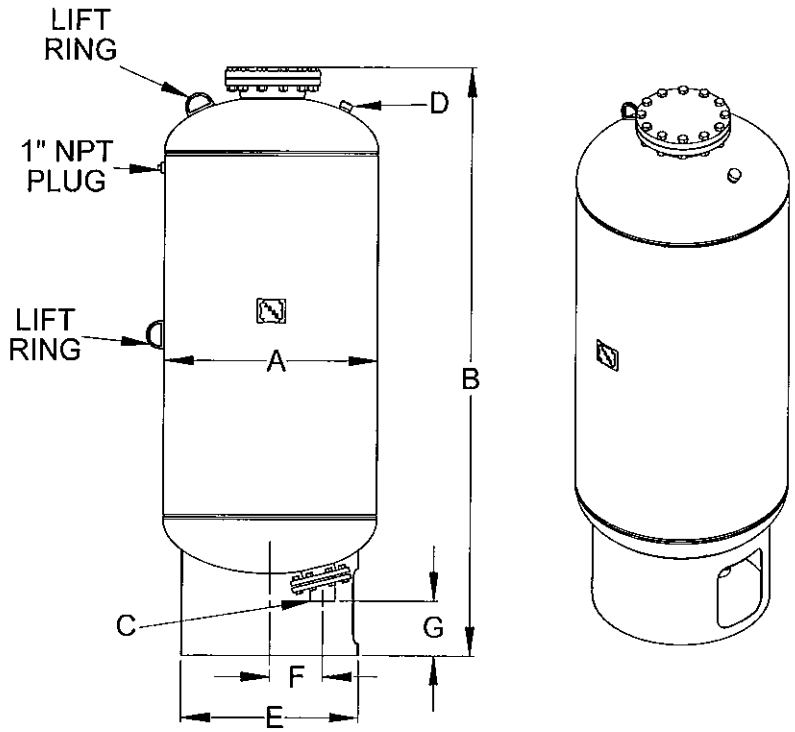

WR 530-A thru WR 570-A

Dimensions & Weights

Model Number	Wessels Model	A (in/mm)	B (in/mm)	System Conn. C (in/mm)	System Conn. D	E (in/mm)	F (in/mm)	G (in/mm)	Approx. Ship Wt. (lbs/kgs)
WR 530-A	FXA-1000	36/915	87/2210	3/76	.302"-32NC	30/762	8/203	8 ½ / 216	735/333
WR 540-A	FXA-2000	36/915	98 ½ / 2490	3/76	.302"-32NC	30/762	8/203	8 ½ / 216	745/337
WR 550-A	FXA-1400	36/915	110 ½ / 2819	3/76	.302"-32NC	30/762	8/203	8 ½ / 216	900/408
WR 560-A	FXA-1600	48/1219	84/2134	3/76	.302"-32NC	42/1066	9/229	8 ¾ / 223	1210/549
WR 570-A	FXA-2000	48/1219	96/2464	3/76	.302"-32NC	42/1066	9/229	8 ¾ / 223	1305/592

Notes

- Tanks are factory pre-charged at 30 psi / 206 kpa and field adjustable.
- California code-sight glass is available upon request.
- Tanks installed horizontally must have the system connection below the horizontal centerline of the tank.
- Available with mounting clips.

SINCE 1908
wessels company

SUBMITTAL

FXA-SERIES with WessGuard®

HYDRO-PNEUMATIC TANKS

Models: FXA-1000-WG thru FXA-15000-WG
Submittal Sheet No. C-1011**B** Date: 4/16

Job Name	_____	Submitted By	_____	Date	_____
Location	_____	Approved By	_____	Date	_____
	_____	Order No.	_____	Date	_____
Engineer	_____	Notes	_____		
Contractor	_____		_____		
Sales Rep.	_____		_____		

Description

Wessels type FXA tanks are ASME replaceable bladder type pre-charged hydro-pneumatic tanks with WessGuard® bladder monitor for commercial and industrial well and water systems, booster systems, or other potable water applications. They are designed to deliver water under pressure between pump cycles to provide sufficient flow to meet demands. WessGuard monitor will activate an audible LED alarm to notify maintenance staff of this potential systems issue. The water is contained in a butyl bladder. All FXA hydro-pneumatic tanks can be installed vertically or horizontally.

Construction

Shell: Carbon steel
Bladder: Heavy-duty butyl (FDA Approved)
System Connection: Epoxy lined

Performance Limitations

Maximum Design Temperature: 240°F
Maximum Design Pressure: 125 PSIG*

*200 & 250 PSIG available

NSF Listed Material

Model Number	Part Number	Tank Volume (Gallons)	Tagging Information	Quantity
FXA-1000-WG	61011000	264		
FXA-1200-WG	61011200	317		
FXA-1400-WG	61011400	370		
FXA-1600-WG	61011600	422		
FXA-2000-WG	61012000	528		
FXA-2500-WG	61012500	660		
FXA-3000L-WG	61013000	792		
FXA-3000S-WG	61013001	792		
FXA-4000-WG	61014000	1056		
FXA-5000-WG	61015000	1320		
FXA-7500-WG	61017500	1980		
FXA-10000-WG	61019999	2640		
FXA-15000-WG	61010000	3963		

Typical Specification

Furnish and install, as shown on plans, a _____ gallon _____" diameter X _____" (high) pre-charged steel hydro-pneumatic tank with replaceable heavy-duty butyl bladder. The tank shall have capacitive sensor bladder monitor with visual and audible alarm that activates based on excessive bladder movement. The tank shall have NPT epoxy lined system connections and a 0.302"-32 charging valve connection (standard tire valve) to facilitate the on-site charging of the tank to meet system requirements. The tank must be constructed in accordance with most recent addendum of Section VIII Division 1 of the ASME Boiler and Pressure Vessel Code.

Each tank shall be Wessels model number SMART TANK SERIES™ FXA- _____-WG or approved equal.

101 TANK ST • GREENWOOD, IN 46143 • (317) 888-9800 • (317) 888-9988 FAX • www.westank.com

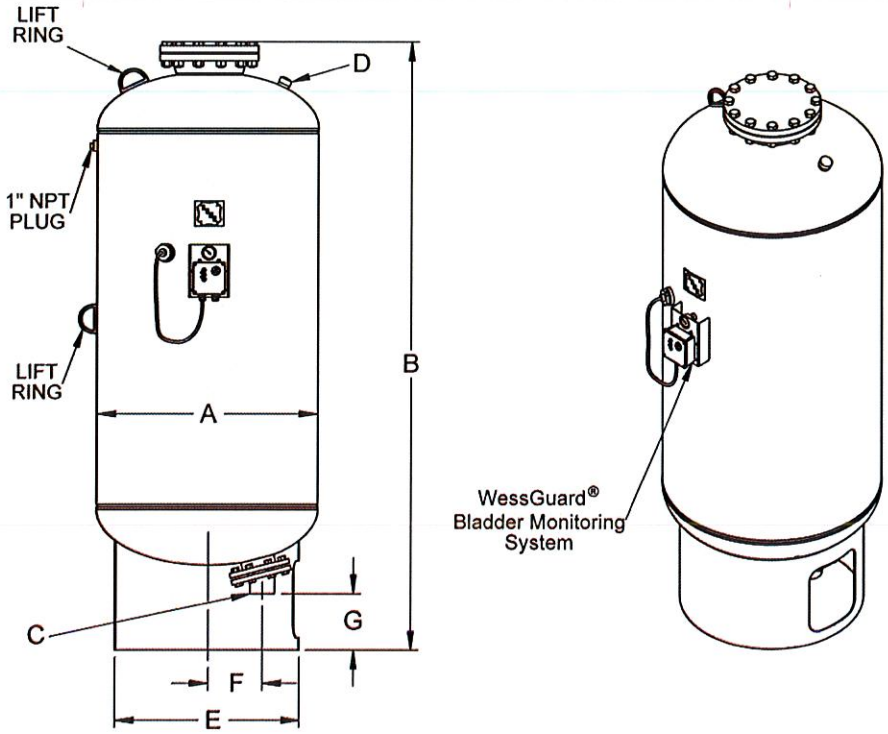

FXA-1000-WG thru FXA-15000-WG

Dimensions & Weights

Model Number	Dimensions in Inches							Approx. Ship Wt. (lbs)
	A	B	System Connection C	Charging Valve D	E	F	G	
FXA-1000-WG	36	87	3	0.302 - 32NC	30	8	8 1/2	735
FXA-1200-WG		98 1/2						745
FXA-1400-WG		110 1/2						900
FXA-1600-WG	48	84			42	9	8 3/4	1210
FXA-2000-WG		96						1305
FXA-2500-WG		110	4				8 1/4	1430
FXA-3000L-WG		133						1575
FXA-3000S-WG	60	93			54	10		2169
FXA-4000-WG		115						2638
FXA-5000-WG		138						3246
FXA-7500-WG	72	140			60	11		4080
FXA-10000-WG		172						4920
FXA-15000-WG		243						6000

Notes

- Tanks are factory pre-charged at 30 psi and field adjustable.
- California code-sight glass is available upon request.
- Tanks installed horizontally must have the system connection below the horizontal centerline of the tank.
- Available with mounting clips.

YASKAWA

Date	Customer	Job Name	P.O. / S.O.

Variable Frequency Drive (VFD)
P1000 Bypass Mechanical Specification Submittal
(For NEMA 3R / UL Type 3R Rated Bypass Drives)

GENERAL

The P1000 bypass package provides a P1000 Drive in a NEMA 3R (UL Type 3R) enclosure, with a 3-contactor style bypass, allowing motor operation from either the drive or across the line. The P1000 features pump- and fan-specific application macros, an easy-to-read LCD keypad that provides Hand-Off-Auto interface, and a real time clock. These features make the P1000 perfect for most pump and fan applications that require reliable motor control.

The P1000 Bypass also features embedded communications for Modbus/Memobus, BACnet, Siemens APOGEE, and Johnson Controls Metasys. DeviceNet, PROFIBUS, Modbus TCP/IP, LonWorks and EtherNet/IP cards are also available as separate options.

The P1000 Drive is a high performance PWM (pulse-width-modulated) AC drive. Three-phase input line power is converted to a sine-coded, variable frequency output, which provides optimum speed control of any conventional squirrel cage induction motor. The use of IGBTs (Insulated Gate Bipolar Transistors), with a carrier frequency range of 1 kHz to 15 kHz, permits quiet motor operation.

This drive has one control logic board and keypad for all horsepower ratings. Printed circuit boards employ surface mount technology, providing both high reliability, and small physical size of the printed circuit assemblies.

P1000 DRIVE STANDARDS

UL 508C (Power Conversion)

CSA 22.2 No. 14-10 (Industrial Control Equipment)

UL 1995 (Plenum)

CE mark 2006/95/EC LVD

CE mark 2004/108/EC

IEC 61800-5-1 (LVD)

EN 61800-3

IEC 60529

IEEE C62.41

BTL certified (BACnet)

UL, cUL listed; CE marked

RoHS Compliant

BYPASS PANEL STANDARDS

UL 508A (Industrial Control Panels)

UL, cUL listed

BTL certified (BACnet)

ENVIRONMENTAL & SERVICE CONDITIONS

Ambient service temperature: -10°C to 40°C (14°F to 104°F)

Ambient storage temperature: -20°C to 60°C (-4°F to 140°F)

Humidity: 95% RH or less, non-condensing

Altitude: Up to 1000 meters (3300 feet), higher by derating

Service factor: 1.0

Vibration: 0.33 mm Displacement (10 to 20 Hz)
0.22 G (20 to 55 Hz)

QUALITY ASSURANCE

In circuit testing of all printed circuit boards is conducted to ensure proper manufacturing

Final printed circuit board assemblies are functionally tested via computerized test equipment

All fully assembled controls are tested with induction motor loads to assure unit specifications are met

The average MTBF (Mean Time Between Failure) is 28 years

DRIVE CONSTRUCTION

Input Section- The drive power input stage converts three-phase AC line power into a fixed DC voltage via a solid-state full wave diode rectifier with MOV (Metal Oxide Varistor) surge protection. An internal 3% DC bus reactor at ratings of greater than 30HP reduces harmonics (optional at smaller ratings).

Intermediate Section- The DC bus maintains a fixed, filtered DC voltage with short circuit protection as a DC supply for the drive output section. The DC bus is monitored by drive diagnostic logic circuits to continuously protect and monitor the power components.

Output Section- Insulated Gate Bipolar Transistors (IGBTs) convert DC bus voltage to a variable frequency, variable voltage PWM sine-coded AC output to the motor. Use of IGBT devices allow motor noise at 60 Hz to measure less than 2 dB (@ 1 meter) above that resulting from across the line operation.

Available horsepower ratings:

208VAC: 1 thru 150 HP
480VAC: 1 thru 500 HP

Microprocessor based control circuit uses non-volatile memory (NVRAM) so all programming data is saved when the drive is disconnected from power

Current transformers detect the output current for motor control and protective functions

Multi-language 5-line 16-character LCD Hand-Off-Auto keypad with real time clock. Provides local programming, run/stop control, monitoring, speed reference and reset commands.

Customizable display of readouts including output frequency, output voltage, output current, output power, DC bus voltage, PI feedback and fault status. Includes parameter settings copy backup function

Built-In real time clock for time/date stamping of fault events along with timer functions for starting, stopping and speed changes without the need for external controls

Removable I/O terminal board has backup memory. All parameter changes are automatically saved to both the main control board and the I/O board. Leave I/O wiring connected when replacing a drive

Easy to remove DC voltage heat sink cooling fans with programmable on/off control

USB Type B port for quick and easy PC Connection

PROTECTION

Output current overload rating: 110% of drive's continuous current rating for 60 seconds

Output short circuit protection

Current limited stall prevention (overload trip prevention) during acceleration, deceleration, and run conditions

Optically isolated operator keypad controls

Fault display with time stamp storage of last 10 faults

Motor hunting prevention function

Electronic ground fault protection

Electronic thermal motor overload (UL approved) protects the motor while operating in drive and bypass mode

Motor current displays in both drive and bypass modes of operation as well as verification that the motor is running

Proof of flow/loss of flow detection in both drive and bypass modes

DC bus charge indication

Heat sink over temperature protection

Cooling fan operation hours monitor

Input/output phase loss protection

Line voltage sensors to monitor for brownout and blackout conditions with adjustable fault levels to ensure the proper settings pursuant to each application

Reverse prohibit function

Short circuit withstand rating of 65kAIC RMS, 100kAIC RMS with optional breaker

OPERATION

Over 100 programmable functions with resettable factory fan and pump presets

User parameter settings initialization for re-establishing project specific parameter settings

Output frequency and speed display can be programmed for speed-related and control indications including: Hz, RPM, % or custom units

Power loss ride-thru (2 seconds capable)

Time delay on start, peak avoidance

Drive accepts either a direct acting or a reverse acting speed command signal

Bi-directional speed search capability allows starting into a rotating load. Two types: current detection and residual voltage detection

DC injection braking prevents fan wind milling at motor start

Ramp-to-stop or coast-to-stop selection

Auto restart capability: 0 to 10 attempts with adjustable delay time between attempts

One custom selectable Volts/Hertz pattern and multiple preset Volts/Hertz patterns

Analog speed reference signals have adjustable bias and gain

Automatic energy savings, reduced voltage operation

While the drive is running, operational changes in control and display functions are possible including:

Hand/Off/Auto commands
Start/stop commands
Frequency reference command
Acceleration time (0 to 6000 seconds)
Deceleration time (0 to 6000 seconds)
Monitor displays
Remove the operator keypad

DRIVE FEATURES

Displacement power factor: 0.98 throughout the motor speed range

Drive efficiency: 96% at half-speed; 98% at full-speed

Starting torque capability: 150% from 3 Hz

Speed control range: 40:1

Carrier frequency: adjustable from 1 kHz to 15 kHz

Input phase insensitive; sequencing of the three phase input is unnecessary

Voltmeter, ammeter, kilowatt meter, elapsed run time meter and heatsink temperature monitoring functions

Two internal (PI) Controls

1. Drive internal PI closed loop control with selectable engineering units
2. Independent PI control of external devices

Differential PI feedback feature

Sleep function in both closed loop and open loop control

Feedback signal low pass filter

Feedback signal loss detection with selectable response

Feedback signal inverse and square root capability

Feedback transmitter power supply: 24 VDC, 150 mA

Input and output terminal status monitors

Diagnostic fault/alarm indicators with dedicated contacts

S-curve soft start / soft stop capability

Network communication loss detection with selectable response

Up/down motor operated pot (MOP) floating point control

17 preset speeds

Critical frequency rejection capability: 3 selectable, adjustable bandwidths

Dynamic noise control function for quiet motor operation

Programmable security code for operator keypad lockout

Run/stop command methods:

Terminal strip (2-wire or 3-wire)
Network communication
Operator keypad

Speed reference (speed command) methods:

0 to 10 VDC or -10 to 10 VDC (20 kΩ)
4 to 20 mA or 0 to 20 mA (250 Ω)
0 to 32 kHz pulse train
Network communication
Operator keypad

8 programmable multi-function digital input terminals providing 60+ functions (24 VDC, sinking or sourcing, internal/external power supply)

3 programmable multi-function digital output terminals providing 50+ functions (2 Form-A and 1 Form-C relays, 1 A @ 250 VAC / 30 VDC)

3 programmable multi-function analog input terminals providing 15+ functions (individually selectable for 0 to 10 VDC, -10 to 10 VDC, 4 to 20 mA, or 0 to 20 mA)

2 programmable multi-function analog output terminals providing 20+ functions (individually selectable for 0 to 10 VDC, -10 to 10 VDC, or 4 to 20 mA)

1 programmable multi-function pulse train input terminal providing several functions (0 to 32 kHz)

1 fixed fault output relay (Form-C, 1 A @ 250 VAC / 30 VDC)

1 built-in RS-422/485 115.2 kbps Modbus/Memobus network communication port

Stationary and rotational motor auto-tuning

Overexcitation braking function stops the motor in up to half the normal time

Motor preheat function

Upgradeable drive firmware via PC program

Heat sink over temperature speed fold-back feature

Bumpless transfer between local and remote modes

Fan failure detection and selectable response

BYPASS FEATURES

Bypass and drive are factory assembled

Bypass and Drive input/output contactors

Lockable Main Input circuit breaker (65kAIC panel rating)

Thermal motor overload relay, class 20

115 VAC control transformer, fused

Drive H/O/A keypad used for bypass control

Damper control circuit with end of travel feedback with two adjustable wait time functions

Input fuses

Selectable energy savings and harmonic reduction mode.

No load detection (loss of load) fully monitored in drive and bypass modes

Door mounted control keypad with LCD display for "Control Power", "Drive Ready", "Drive Run", "Drive Selected", "Drive Fault", "Drive Test", "Bypass Selected", "Bypass Run", "Motor OL", "Safety Open" "BAS Interlock", "Auto Run", Auto Transfer", "Emergency Override", "Hand Mode", "Off Mode", and "Auto Mode"

7 programmable multi-function digital input terminals (24 VDC, 8 mA) providing 60+ programmable functions including:

Customer Safeties
BAS / Damper Interlock
Emergency Override
Preset Speed
PI control enable / disable

4 programmable multi-function digital output terminals (Form-C relays, 2 A @ 120 VAC / 24 VDC) providing 50+ functions including:

Damper control
Hand / Auto Status
Contactor Control for External Bypass
Overtorque/undertorque detection

Auto speed reference (speed command) methods:

0 to 10 VDC (20 kΩ)
4 to 20 mA (250 Ω)

YASKAWA
The Drive for Quality™

P1000 Bypass Options

Variable Frequency Drive (VFD) P1000 Mechanical Specification Products and Options Submitted

After deleting all unused options, delete this sentence.

ENCLOSURE TYPE

[3] NEMA 3R (UL Type 3R) Enclosure

VOLTAGE

[D] 208 volt models, 200 to 208 VAC (+10/-15 %); 50/60 Hz (+/-5%)

[B] 480 volt models, 380 to 480 VAC (+10/-15 %); 50/60 Hz (+/-5%)

[P] POWER OPTIONS

MAIN INPUT DISCONNECT (Choose None or One)

[M] Circuit Breaker Disconnect with a UL508A panel SCCR of 100k RMS Symmetrical, 480VAC maximum (Replaces Standard Input Disconnect)

REACTOR (Choose None or One)

[A] Two Motor "AND"
[Y] Two Motor "OR"
[R] 3% Line Reactor
[X] 3% Bus Reactor (1)
[H] 3% Load Reactor

FILTER (Choose None or One)

[N] Cap Filter

ADDITIONAL POWER OPTIONS (Choose None, Any or All)

[2] Surge Suppression
[3] Space Heater
[4] 50°C Ambient

[T] CONTROL OPTIONS

NAMEPLATE (Choose None or One)

[W] Custom Nameplate

NETWORK COMMUNICATION (Choose None or One)

[D] EtherNet/IP
[G] DeviceNet
[H] PROFIBUS
[Q] Modbus TCP/IP

KEYPAD (Choose None or One)

[M] Keypad Viewing Window

(1) 3% bus reactors are only available as an option on small ratings; large drives have a bus reactor as standard. See the price book for details.

Tag:
Model Number:
HP:
Amps:
Volts:

GRUNDFOS

Submittal Data

PROJECT:		UNIT TAG:		QUANTITY:	
		TYPE OF SERVICE:			
REPRESENTATIVE:		SUBMITTED BY:		DATE:	
ENGINEER:		APPROVED BY:		DATE:	
CONTRACTOR:		ORDER NO.:		DATE:	

Product photo could vary from the actual product

MS6000QFT40

Submersible motors for 6" or larger wells

Conditions of Service

Pump Data	
Product number:	96166186

Motor Data	
Rated power - P2:	20 HP
Rated voltage:	208-220-230 V
Main frequency:	60 Hz
Enclosure class:	IP68
Insulation class:	F
Motor protection:	NONE
Thermal protection:	external
Motor type:	MS6000

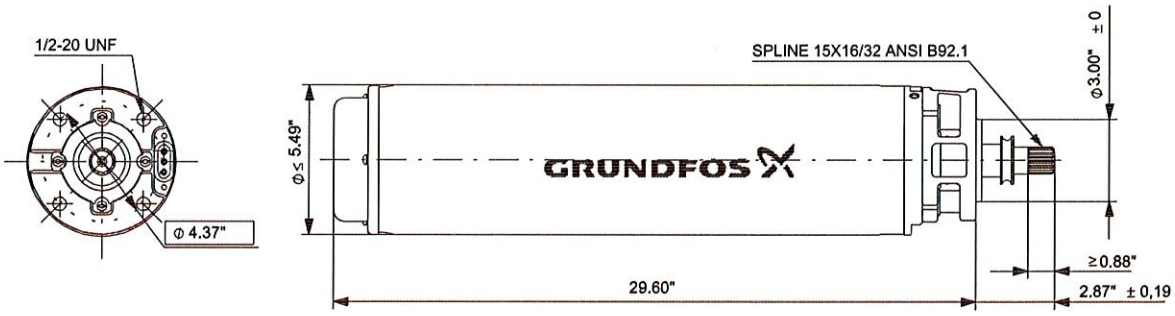

Materials:
Motor: Stainless steel
Motor: DIN W.-Nr. 1.4301
Motor: AISI 304

GRUNDFOS

Company name: Grundfos
Created by:
Phone:

Date: 10/5/2020

Description	Value
General information:	
Product name:	MS6000QFT40
Product No.:	96166186
EAN:	5711498958098
Price:	
Technical:	
Shaft seal for motor:	SIC/SICNBR
CE approved (Yes/No):	N
ACS approved (Yes/No):	N
WRAS approved (Yes/No):	N
DM 174 approved (Yes/No):	N
Model:	C
Motor version:	T40
Materials:	
Motor:	Stainless steel
Motor:	DIN W.-Nr. 1.4301
Motor:	AISI 304
Installation:	
Maximum ambient pressure:	870.23 psi
Motor diameter:	6 inch
Staybolt:	1/2-20 UNF
Liquid:	
Max liquid temperature at 0.15 m/sec:	104 °F
Electrical data:	
Motor type:	MS6000
Rated power - P2:	20 HP
KVA code:	H
Main frequency:	60 Hz
Rated voltage:	3 x 208-220-230 V
Voltage tolerance:	+6/-10 %
Service factor:	1.15
Rated current:	71.5-67.0-65.0 A
Maximum current consumption:	71.5 A
Starting current:	460-520-570 %
Cos phi - power factor:	0.86-0.85-0.84
Rated speed:	3430-3450-3470 rpm
Rated full-load torque:	35.4 ft lb
Locked-rotor torque:	120-140-160 %
Breakdown torque:	220-260-290 %
Moment of inertia:	0.17 lb ft²
Axial load max:	27 kN
Start. method:	direct-on-line
Enclosure class (IEC 34-5):	IP68
Insulation class (IEC 85):	F
Motor protection:	NONE
Thermal protec:	external
Built-in temperature transmitter:	yes
R:	0.207 ohm
Others:	
Net weight:	123 lb
Sales region:	North America
Country of origin:	HU
Custom tariff no.:	8501.52.4000

GRUNDFOS

Ordering data

96166186 MS6000QFT40 60 Hz **Product No.: 96166186**

Company name: Grundfos Date: 10/5/2020
Created by: Phone: Fax:

Project: Client number:
Contact: Reference number:

Electrical data:

Frequency		60 Hz
Rated motor voltage		208-220-230 V
Rated motor power		20 HP
Rated motor speed		3430-3450-3470 rpm
Rated motor torque		35.4 ft lb
Wiring connection	-	-
Rated motor current		71.5-67.0-65.0 A
Max motor current		71.5 A
Efficiency class	-	-
Full load Efficiency %	-	-
Power factor		0.86-0.85-0.84
Starting- / Rated motor current (50/60)		/
Breakdown- / Rated motor torque (50/60)		/ 220-260-290 %
Starting- / Rated motor torque (50/60)		/

Mechanical data:

Noise measurements (50/60)	- -
Moment of inertia	0.17 lb ft²
Drain holes	Yes (closed)
Bearing DE	-
Bearing NDE	-
Bearing arrangement	NDE-locked
Type of bearing DE	-
Bearing seal DE	-
Characteristic of grease DE	-
Type of bearing NDE	-
Bearing seal NDE	-
Characteristic of grease NDE	-
Regreasing device	No
Type of lubrication	-
Relubrication interval	-
Quantity of grease for relubrication	-
External grounding	-
Color/type	-

Explosion protection:

Type of protection	-

Ambient conditions:

Ambient temperature	
Altitude above sea level	3280 ft
Approvals and specifications	IEC 60034

General data:

Frame size	MS6000
Type of construction	-
Weight, without optional accessories	123 lb
Frame material	-
Degree of protection	IP IP68
Method of cooling, TEFC	-
Vibration class	
Insulation class	155(F) to 130(B)
Duty type	-
Direction of rotation	/

Terminal box:

Material of terminal box	-
Cable entry	-
Cable gland	-

Protection:

Built-in protection	-

Grundfos A/S reserves the right to change the specifications without further notice. Grundfos A/S cannot be held responsible for any missing, inaccurate or obsolete data. There may be discrepancies between calculated and rating plate values.

GRUNDFOS

Company name: Grundfos
Created by:
Phone:

Date: 10/5/2020

Order Data:

Product name: MS6000QFT40
Amount: 1
Product No.: 96166186
Price:

Total: Price on request

GRUNDFOS

Submittal Data

PROJECT:		UNIT TAG:		QUANTITY:	
		TYPE OF SERVICE:			
REPRESENTATIVE:		SUBMITTED BY:		DATE:	
ENGINEER:		APPROVED BY:		DATE:	
CONTRACTOR:		ORDER NO.:		DATE:	

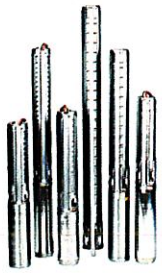

Product photo could vary from the actual product

150S150-8

Submersible pumps in stainless steel. EN 1.4301 (AISI 304). EN 1.4401 (AISI 316). EN 1.4539 (AISI 904L). Typical application: Ground water, Irrigation, Mining, Fountain, Off-shore etc.

Conditions of Service	
Efficiency:	
Liquid:	Water
Temperature:	68 °F
NPSH required:	ft
Specific Gravity:	1.000

Pump Data	
Maximum liquid temperature:	140 °F
Product number:	13B60008

Motor Data	
Main frequency:	60 Hz

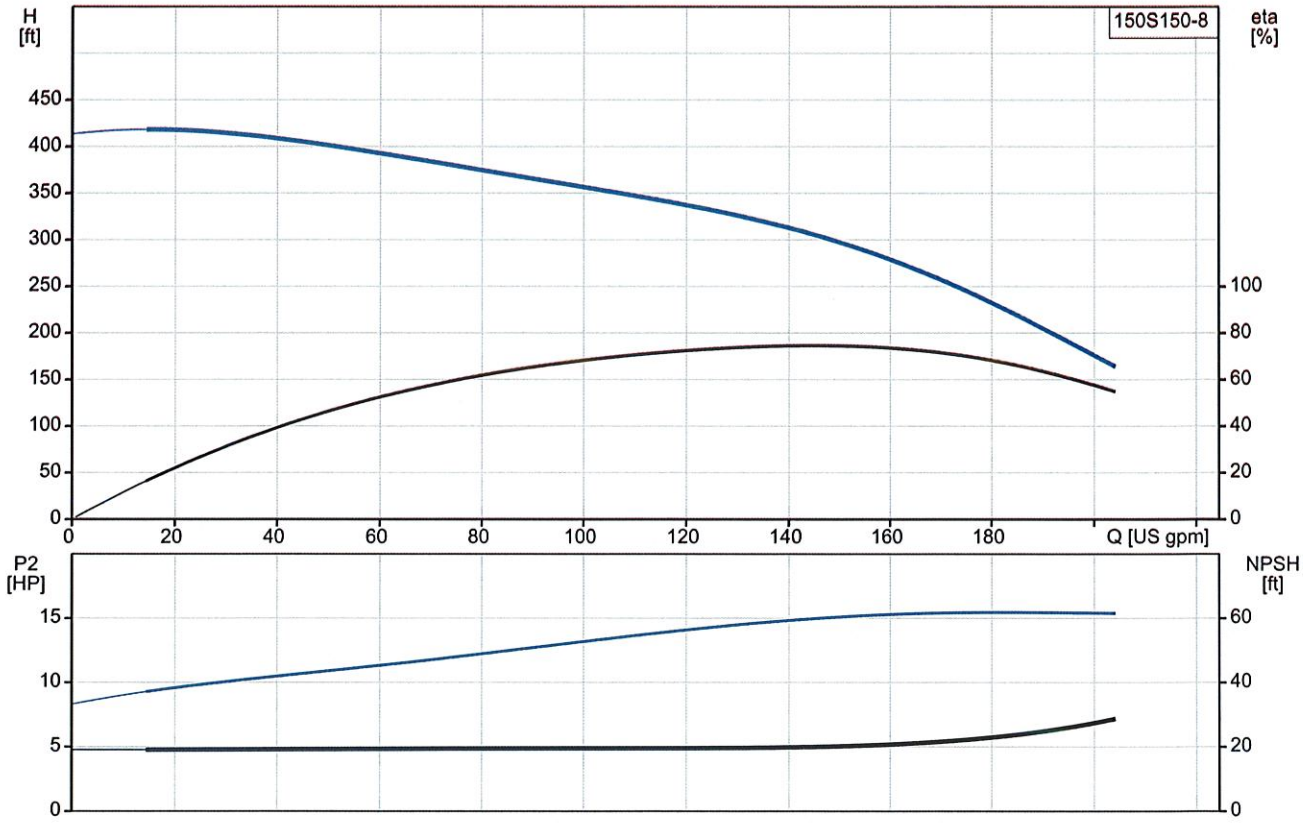

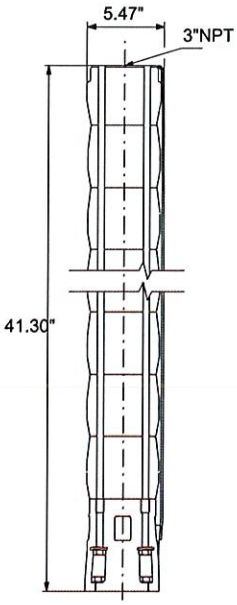

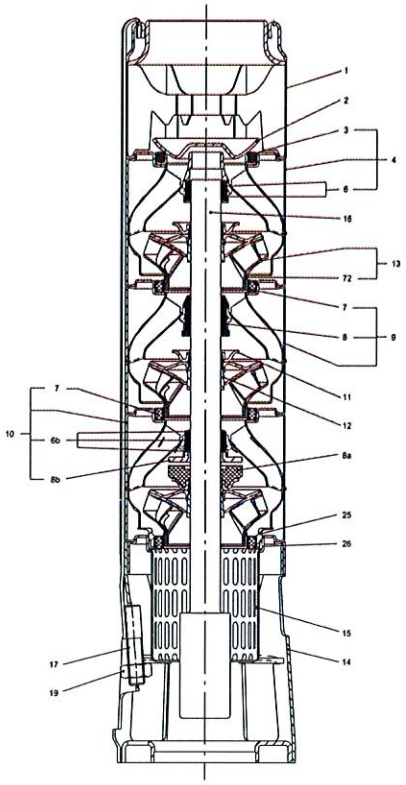

Materials:

Pump:	Stainless steel
Pump:	EN 1.4301
Pump:	AISI AISI 304
Impeller:	Stainless steel
Impeller:	EN 1.4301
Impeller:	AISI AISI 304

GRUNDFOS

Company name: Grundfos
Created by:
Phone:

Date: 10/5/2020

Description	Value
General information:	
Product name:	150S150-8
Product No.:	13B60008
EAN:	5700391424021
Price:	
Technical:	
Pump speed on which pump data is based:	3450 rpm
Rated flow:	159 US gpm
Rated head:	282.2 ft
Actual impeller diameter:	3.52 in
Stages:	8
Impeller reduc.:	NONE
Curve tolerance:	ISO9906:2012 3B
Model:	B
Valve:	YES
Materials:	
Pump:	Stainless steel
Pump:	EN 1.4301
Pump:	AISI AISI 304
Impeller:	Stainless steel
Impeller:	EN 1.4301
Impeller:	AISI AISI 304
Installation:	
Pump outlet:	3"NPT
Motor diameter:	6 inch
Liquid:	
Pumped liquid:	Water
Maximum liquid temperature:	140 °F
Selected liquid temperature:	68 °F
Density:	62.29 lb/ft³
Electrical data:	
Applic. motor:	GRUNDFOS
Rated power - P2:	15 HP
Power (P2) required by pump:	15 HP
Start. method:	direct-on-line
Others:	
DOE Pump Energy Index CL:	0.91
ErP status:	EuP Standalone/Prod.
Net weight:	43.2 lb
Gross weight:	53.1 lb
Shipping volume:	1.84 ft³
Sales region:	Namreg
Country of origin:	US
Custom tariff no.:	8413.70.2004

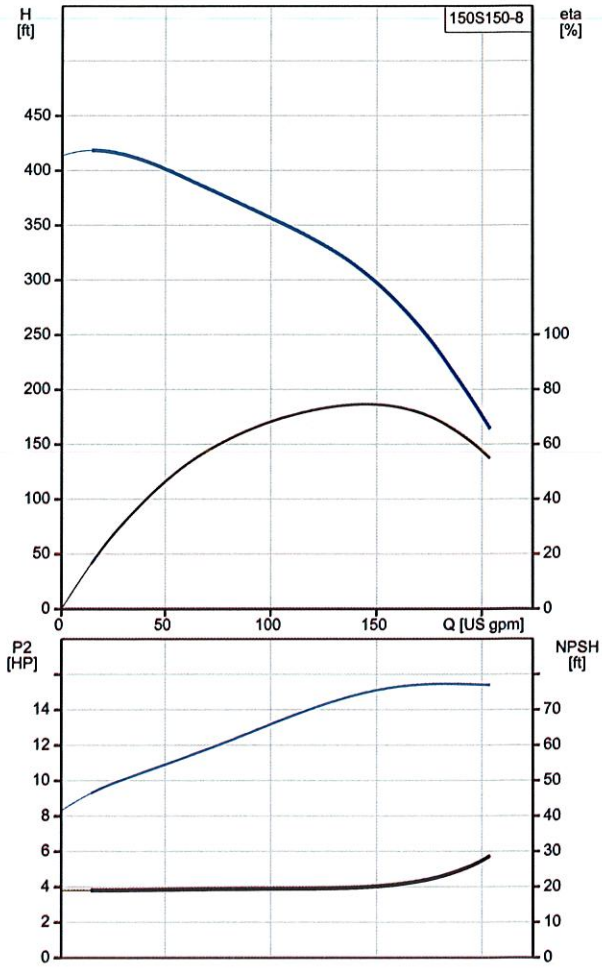

GRUNDFOS

Company name: Grundfos
Created by:
Phone:

Date: 10/5/2020

13B60008 150S150-8 60 Hz

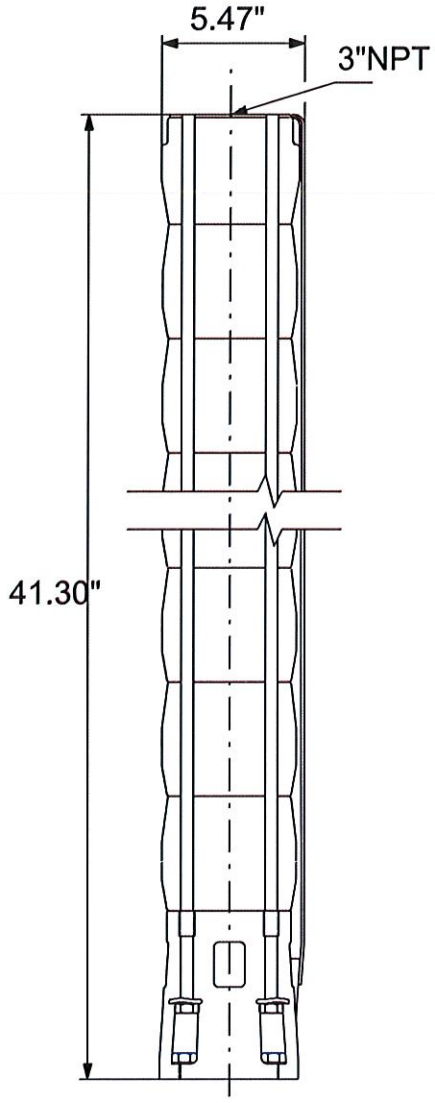

Note! All units are in [in] unless otherwise stated.
Disclaimer: This simplified dimensional drawing does not show all details.

GRUNDFOS

Company name: Grundfos
Created by:
Phone:

Date: 10/5/2020

Order Data:

Product name: 150S150-8
Amount: 1
Product No.: 13B60008
Price:

Total: Price on request

CERTIFICATE OF COMPLIANCE

Certificate Number	MH26400
Report Reference	MH26400 -20140315
Issue Date	2020-JANUARY-17
Issued to:	GRUNDFOS HOLDING A/S POUL DUE JENSENS VEJ 7 8850 BJERRINGBRO DENMARK
This certificate confirms that representative samples of	DRINKING WATER SYSTEM COMPONENTS LEAD CONTENT VERIFICATION OF PRODUCTS IN CONTACT WITH POTABLE WATER Refer to addendum page for Models/Product
	Have been investigated by UL in accordance with the Standard(s) indicated on this Certificate.
Standard(s) for Safety:	NSF/ANSI 61–2016, "Drinking Water System Components - Health Effects."
Additional Information:	See the UL Online Certifications Directory at https://iq.ulprospector.com for additional information.

This *Certificate of Compliance* does not provide authorization to apply the UL Mark. Only the UL Follow-Up Services Procedure provides authorization to apply the UL Mark.

Only those products bearing the UL Mark should be considered as being UL Certified and covered under UL's Follow-Up Services.

Look for the UL Certification Mark on the product.

Bruce Mahrenholz, Director North American Certification Program

UL LLC

Any information and documentation involving UL Mark services are provided on behalf of UL LLC (UL) or any authorized licensee of UL. For questions, please contact a local UL Customer Service Representative at http://ul.com/aboutul/locations/

CERTIFICATE OF COMPLIANCE

Certificate Number MH26400
Report Reference MH26400 -20140315
Issue Date 2020-JANUARY-17

This is to certify that representative samples of the product as specified on this certificate were tested according to the current UL requirements.

Trade Designation USC, CNC	Water Use Temperature, (°C)	Size Range
MS6000 Submersible Motor with Lead Assembly	60	For 6" and 8" pumps with minimum flow rate of 40 GPM

Bruce Mahrenholz, Director North American Certification Program

UL LLC

Any information and documentation involving UL Mark services are provided on behalf of UL LLC (UL) or any authorized licensee of UL. For questions, please contact a local UL Customer Service Representative at http://ul.com/aboutul/locations/

Standard Pipe

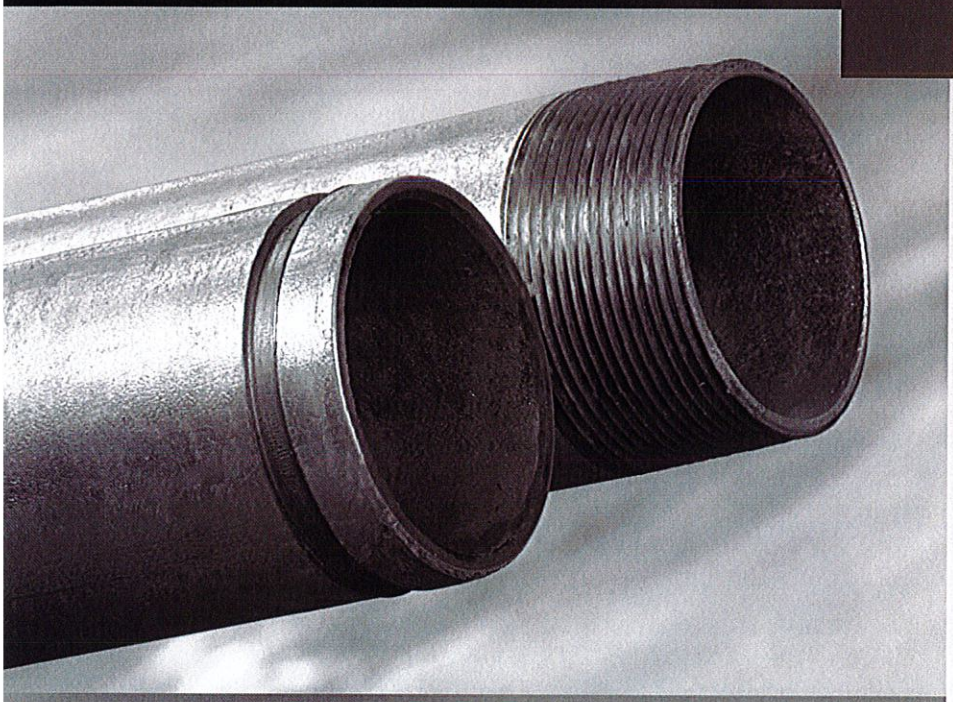

Kelly Pipe

Wheatland Tube
A DIVISION OF ZEKELMAN INDUSTRIES

Standard Pipe: SureThread™ and ERW

Setting the standard in the standard pipe industry

With a tradition of service and quality that's 80-plus years strong, Wheatland Tube is the only domestic, full-line producer of continuous weld (CW) and electric resistance weld (ERW) ¼–18 NPS pipe today. Wheatland is also a worldwide leader in hot-dip galvanization technology.

¼–18 nominal sizes produced and stocked in a variety of ASTM standards

Standard hot-dip galvanization to ASTM A53 requirements

350 combinations of finish, end treatments and lengths

All Wheatland black and galvanized pipe (½–6 NPS) is approved for drinking water usage

A Full Line of Pipe Products for Any Application

Wheatland produces and stocks pipe of ¼–18 nominal sizes in a variety of ASTM standards. SureThread (ASTM A53) and ERW are used for mechanical and pressure applications, and for ordinary uses in steam, water, gas and air lines.

More than 350 different combinations of finish, end treatments and lengths are available on standard pipe. Our standard process is hot-dip galvanization to ASTM A53 requirements.

Surface finishes include black, passivate, galvanized, uncoated, pickled, pickled and oiled, bare and soluble oil. End finishes include plain end, roll groove, cut groove, threaded and coupled, and threads only (one or both ends).

Documented Quality Assurance

Wheatland facilities have quality systems in place and are ISO certified for Quality Management Systems. Strategically located in the U.S., we carry a large inventory and can ship quickly to meet your tight delivery schedules.

MADE IN THE USA

For more information, call **800.257.8182** or visit **wheatland.com**

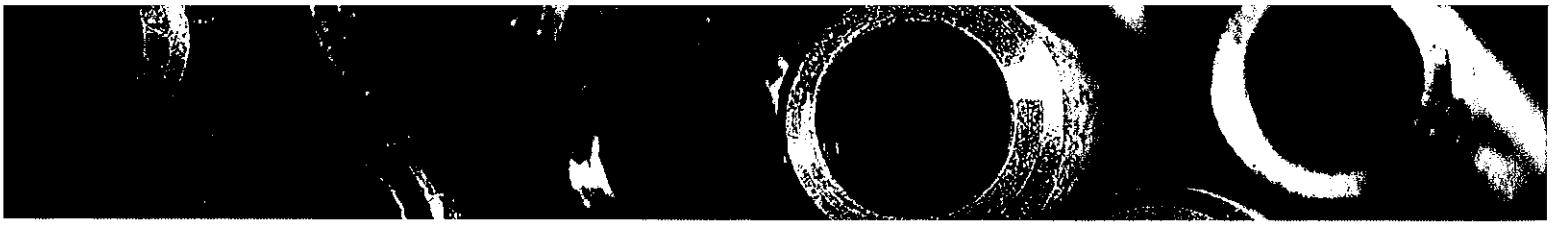

A53 Electric Resistance Weld Pipe, Type E, Grade B

Suitable for welding, threading and grooving

Finish options:
Black and hot-dip galvanized

Sizes:
Schedule 40, 2–18 NPS

Produced to ASTM A53/A53M, federal specification WW-P404 and ASME B36.10M

ASTM A53, TYPE E, WEIGHTS AND DIMENSIONS

TRADE SIZE	OD	NOMINAL WALL THICKNESS	WEIGHT
	In.	In.	lbs./ft.
2	2.375	0.154	3.66
2½	2.875	0.203	5.80
3	3.500	0.216	7.58
4	4.500	0.237	10.80
5	5.563	0.258	14.63
6	6.625	0.280	18.99
8	8.625	0.322	28.58
10	10.750	0.365	40.52
12	12.750	0.375	49.61
14	14.000	0.375	54.62
16	16.000	0.375	62.64
18	18.000	0.375	70.65

HYDROSTATIC AND NON-DESTRUCTIVE ELECTRIC TESTING

Hydrostatic inspection test pressures for plain-end pipe are listed in Table X 2.2 of the A53/A53M industry specification. Test pressures are maintained for a minimum of five seconds. Non-destructive electric testing of the weld seam is required on each length of ERW pipe NPS 2 and larger.

TENSILE REQUIREMENTS

TENSILE STRENGTH, MIN.	YIELD STRENGTH, MIN.
60,000 psi	35,000 psi

BENDING TEST (COLD)

DEGREE OF BEND	DIAMETER OF MANDREL
90°	12x pipe OD

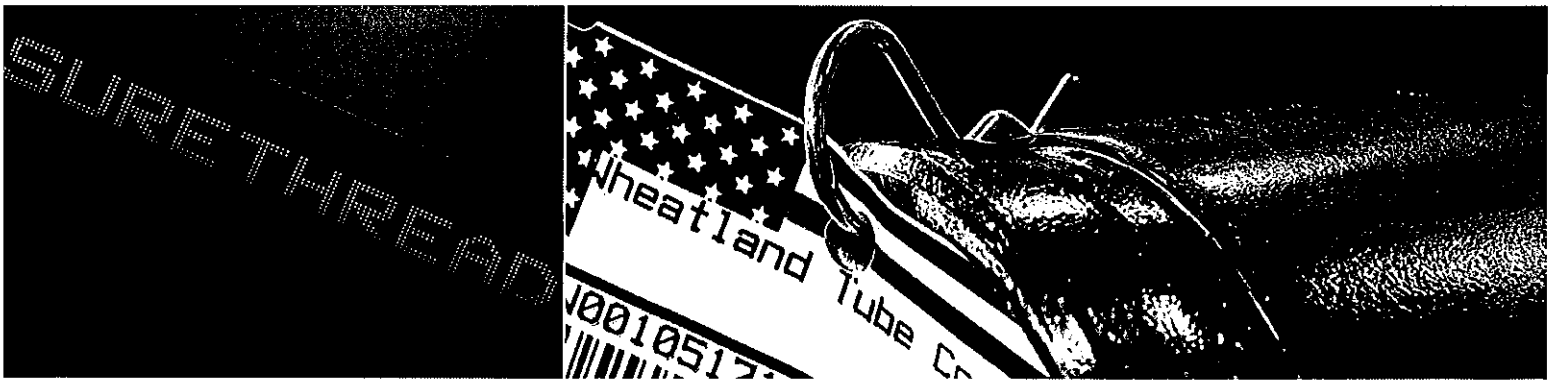

A53 Continuous Weld Pipe, Type F, Grade A

The continuous weld process creates a uniform grain structure to make bending, cutting and threading easier

Ideal for applications with frequent threading, grooving and bending requirements

Finish options:
Black, passivate, bare, pickled and oiled, and hot-dip galvanized

Sizes:
¼–4 NPS

Standard and extra heavy

Produced to ASTM A53/A53M, federal specification WW-P404 and ASME B36.10M

TEST PRESSURES (GRADE A)

NOMINAL SIZE	TEST PRESSURE (psi)
¼	700
½	700
¾	700
1	700
1¼	1,200
1½	1,200
2	2,300
2½	2,500
3	2,220
3½	2,030
4	1,900

ASTM A53, TYPE F, WEIGHTS AND DIMENSIONS

TRADE SIZE	OD	SCHEDULE 40		SCHEDULE 80	
	In.	Wall (in.)	Weight (lbs./ft.)	Wall (in.)	Weight (lbs./ft.)
¼	0.54	0.088	0.43	0.119	0.54
⅜	0.675	0.091	0.57	0.126	0.74
½	0.84	0.109	0.85	0.147	1.09
¾	1.05	0.113	1.13	0.154	1.48
1	1.315	0.133	1.68	0.179	2.17
1¼	1.66	0.14	2.27	0.191	3
1½	1.9	0.145	2.72	0.2	3.63
2	2.375	0.154	3.66	0.218	5.03
2½	2.875	0.203	5.8	0.276	7.67
3	3.5	0.216	7.58	0.3	10.26
3½	4	0.226	9.12	0.318	12.52
4	4.5	0.237	10.8	0.337	15

TENSILE REQUIREMENTS

TENSILE STRENGTH, MIN.	YIELD STRENGTH, MIN.	ELONGATION IN 2
48,000 psi	30,000 psi	Refer to A53 table X 4.1, latest revisions—ASTM A53/A53M

BENDING TEST (LESS THAN NPS 2)

	DEGREE OF BEND	DIAMETER OF MANDREL
Standard	90°	12x pipe OD
Close Coiling	90°	8x pipe OD

FLATTENING TEST (NPS 2 AND GREATER)

To test the quality of the weld, we position the weld at 90° from the direction of force and flatten until the OD is ¾ of the original outside diameter. No cracks should occur along the inside or outside surface of the weld.

STANDARD PIPE SCHEDULE 40 — ASTM A53 GRADES A AND B

TRADE SIZE	DN DESIGNATOR	OD		ID		WALL THICKNESS		NOMINAL WEIGHT (MASS) PER UNIT LENGTH			
		In.	mm	In.	mm	In.	mm	Plain End (lbs./ft.)	Plain End (kg/m)	Threads & Couplings (lbs./ft.)	Threads & Couplings (kg/m)
¼	8	0.540	13.7	0.364	9.2	0.088	2.24	0.43	0.63	0.43	0.63
⅜	10	0.675	17.1	0.493	12.5	0.091	2.31	0.57	0.84	0.57	0.84
½	15	0.840	21.3	0.622	15.8	0.109	2.77	0.85	1.27	0.86	1.27
¾	20	1.050	26.7	0.824	20.9	0.113	2.87	1.13	1.69	1.14	1.69
1	25	1.315	33.4	1.049	26.6	0.133	3.38	1.68	2.50	1.69	2.50
1¼	32	1.660	42.2	1.380	35.1	0.140	3.56	2.27	3.39	2.28	3.40
1½	40	1.900	48.3	1.610	40.9	0.145	3.68	2.72	4.05	2.74	4.04
2	50	2.375	60.3	2.067	52.5	0.154	3.91	3.66	5.44	3.68	5.46
2½	65	2.875	73.0	2.469	62.7	0.203	5.16	5.80	8.63	5.85	8.67
3	80	3.500	88.9	3.068	77.9	0.216	5.49	7.58	11.29	7.68	11.35
3½	90	4.000	101.6	3.548	90.1	0.226	5.74	9.12	13.57	9.27	13.71
4	100	4.500	114.3	4.026	102.3	0.237	6.02	10.80	16.07	10.92	16.23
5	125	5.563	141.3	5.047	158.2	0.258	6.55	14.63	21.77	14.90	22.07
6	150	6.625	168.3	6.065	154.1	0.280	7.11	18.99	28.26	19.34	28.58
8	200	8.625	219.1	7.981	202.7	0.322	8.18	28.58	42.55	29.35	43.73
10	250	10.750	273.0	10.020	254.5	0.365	9.27	40.52	60.29	41.49	63.36
12	300	12.750	323.0	12.000	304.8	0.375	9.52	49.61	73.78	51.28	76.21
14	350	14.000	355.6	13.250	336.5	0.375	9.52	54.62	81.25	-	-
16	400	16.000	406.4	15.250	387.5	0.375	9.52	62.64	93.17	-	-
18	450	18.000	457.0	17.250	438.1	0.375	9.52	70.65	105.10	-	-

Black and galvanized Schedule 40 A53 CW and ERW Grade A and Grade B trade sizes ¼–8 are FM Approved.

FM APPROVED

EXTRA-HEAVY PIPE SCHEDULE 80 — ASTM A53, TYPE F, GRADE A

TRADE SIZE	DN DESIGNATOR	OD		ID		WALL THICKNESS		NOMINAL WEIGHT (MASS) PER UNIT LENGTH			
		In.	mm	In.	mm	In.	mm	Plain End (lbs./ft.)	Plain End (kg/m)	Threads & Couplings (lbs./ft.)	Threads & Couplings (kg/m)
¼	8	0.540	13.7	0.302	7.7	0.119	3.02	0.54	0.80	0.54	0.80
⅜	10	0.675	17.1	0.423	10.7	0.126	3.20	0.74	1.10	0.74	1.10
½	15	0.840	21.3	0.549	13.9	0.147	3.73	1.09	1.62	1.09	1.62
¾	20	1.050	26.7	0.742	18.8	0.154	3.91	1.48	2.20	1.48	2.21
1	25	1.315	33.4	0.957	24.3	0.179	4.55	2.17	3.24	2.19	3.25
1¼	32	1.660	42.2	1.278	32.5	0.191	4.85	3.00	4.47	3.03	4.49
1½	40	1.900	48.3	1.500	38.1	0.200	5.08	3.63	5.41	3.65	5.39
2	50	2.375	60.3	1.939	49.3	0.218	5.54	5.03	7.48	5.08	7.55
2½	65	2.875	73.0	2.323	59.0	0.276	7.01	7.67	11.41	7.75	11.52
3	80	3.500	88.9	2.900	73.7	0.300	7.62	10.26	15.27	10.35	15.39
3½	90	4.000	101.6	3.364	85.4	0.318	8.08	12.52	18.63	12.67	18.82
4	100	4.500	114.3	3.826	97.2	0.337	8.56	15.00	22.32	15.20	22.60

PERMISSIBLE VARIATIONS — ASTM A53 GRADES A AND B PIPE

	OD	OVER	UNDER
Outside Diameter	NPS ⅛ to 1½; DN 6 to 40	1/64 (0.4 mm)	1/64 (0.4 mm)
	NPS 2 and up; DN 50 and up	1%	1%
Wall Thickness at Any Point	—	—	12.5%
Weight	—	10%	10%

Mechanical Properties:
Grade A: Yield — 30,000 psi [205 MPa] minimum; Tensile — 48,000 psi [330 MPa] minimum.
Grade B: Yield — 35,000 psi [240 MPa] minimum; Tensile — 60,000 psi [415 MPa] minimum.

Wheatland Tube
A DIVISION OF ZEKELMAN INDUSTRIES

Wheatland Tube
A DIVISION OF ZEKELMAN INDUSTRIES

1 Council Avenue
P.O. Box 608
Wheatland, PA 16161

800.257.8182
info@wheatland.com
wheatland.com

Zekelman Industries

Corporate Office
227 West Monroe Street
Suite 2600
Chicago, IL 60606

312.275.1600
info@zekelman.com
zekelman.com

About Wheatland Tube Standard Pipe

Wheatland produces a full line of standard pipe — SureThread™ and ERW pipe — in a broad range of sizes. We're the industry leader in hot-dip galvanized pipe, and we offer more than 350 different combinations of finish, end treatments and lengths on our standard pipe.

All Wheatland manufacturing locations' quality management systems are certified to ISO requirements.

For more information, contact Wheatland Tube at:
800.257.8182 or **info@wheatland.com**
Or, visit our website at wheatland.com

Follow us on:

twitter.com/WheatlandTube
linkedin.com/company/zekelman-industries
youtube.com/ZekelmanIndustries
wheatland.com/blog

WST-072120

Zekelman Industries

July 30, 2018

Including Wheatland Tube, Atlas Tube, Sharon Tube, Picoma and Western Tube Divisions

Reference: California Proposition 65 Declaration
California Safe Drinking Water and Toxic Enforcement Act (Proposition 65) Compliance

To whom it may concern:

This letter is a follow up to your inquiry concerning Compliance with California Safe Drinking Water and Toxic Enforcement Act (Proposition 65).

All the Divisions of Zekelman Industries, including Wheatland Tube, Atlas Tube, Sharon Tube, Picoma and Western Tube certify that the pipe and conduit products we manufacture comply with the California Safe Drinking Water and Toxic Enforcement Act of 1986 (Proposition 65).

Zekelman Industries' products do include some substances that are identified on the Proposition 65 list. However, Zekelman Industries has determined their products do not require Consumer Product Exposure Warnings because the quantity of the Proposition 65 listed substances does not exceed the safe harbor level(s). For more information go to www.P65Warnings.ca.gov.

For more information regarding Zekelman Industries' pipe and conduit products, please visit our website at www.zekelman.com or request a Zekelman Industries Safety Data Sheet (SDS) for the products that you purchase.

If I can be of any further assistance, please do not hesitate to contact me.

Sincerely,

Michael S. Ryan

Michael S. Ryan
Technical Services Manager

IAPMO RESEARCH AND TESTING, INC.

5001 East Philadelphia Street, Ontario, California 91761-2816 – USA • 909-472-4100 • 909-472-4244 • www.iapmort.org

ISO/IEC 17065 Product Certification Body #0202

SCC Accredited CB-P/S OCPS Accredited CCH

NSF/ANSI 61

CERTIFICATE OF LISTING

IAPMO Research and Testing, Inc. is a product certification body which tests and inspects samples taken from the supplier's stock or from the market or a combination of both to verify compliance to the requirements of applicable codes and standards. This activity is coupled with periodic surveillance of the supplier's factory and warehouses as well as the assessment of the supplier's Quality Assurance System. This listing is subject to the conditions set forth in the characteristics below and is not to be construed as any recommendation, assurance or guarantee by IAPMO Research and Testing, Inc. of the product acceptance by Authorities Having Jurisdiction.

This certificate is not evidence of current listing. To verify listing status, visit the IAPMO R&T Product Listing Directory at pld.iapmo.org

Effective Date: March 2019 Void After: March 2024

Product: Drinking Water System Components - Health Effects File No. W-9801

Issued To: Zekelman Industries, Inc.
227 West Monroe Street
26th Floor
Chicago, IL 60606

Identification: Each product shall be permanently and legibly marked with the manufacturer's name or trademark. The product may also be marked with the standard designation "NSF/ANSI 61".

Characteristics: Materials or products that come into contact with drinking water and/or drinking water treatment chemicals. Products and materials may include process media, protective materials, joining and sealing materials, pipes and related products, mechanical devices used with treatment/transmission/distribution systems, and mechanical plumbing devices. To be installed in accordance with the manufacturer's instruction. Lead free requirements are addressed under a separate certificate of listing.

Products listed on this certificate have been tested by an IAPMO R&T recognized laboratory. This recognition has been granted based upon the laboratory's compliance to the applicable requirements of ISO/IEC 17025.

Chairman, Product Certification Committee

CEO, The IAPMO Group

This listing period is based upon the last date of the month indicated on the Effective Date and Void After Date shown above. Any change in material, manufacturing process, marking or design without having first obtained the approval of the Product Certification Committee, or any evidence of non-compliance with applicable codes and standards or of inferior workmanship, may be deemed sufficient cause for revocation of this listing. Production of or reference to this form for advertising purposes may be made only by specific written permission of IAPMO Research and Testing, Inc. Any alteration of this certificate could be grounds for revocation of the listing. This document shall be reproduced in its entirety.

IAPMO RESEARCH AND TESTING, INC.

NSF/ANSI 61

CERTIFICATE OF LISTING

Void After: March 2024

Product: Drinking Water System Components - Health Effects

File No. W-9801

Issued To: Zekelman Industries, Inc.

Products are in compliance with the following standard(s):

NSF/ANSI 61-2017

IAPMO RESEARCH AND TESTING, INC.

NSF/ANSI 61

CERTIFICATE OF LISTING

This certificate is not evidence of current listing. To verify listing status, visit the IAPMO R&T Product Listing Directory at pld.iapmo.org

Void After: March 2024

Product: Drinking Water System Components - Health Effects

File No. W-9801

Issued To: Zekelman Industries, Inc.

MODELS:

Model No.	Size
Carbon Steel Pipe, Black (Sch 40 / Sch 80)	1/8" - 6"
Carbon Steel Pipe, Galvanized (Sch 40/80)	1/8'' - 6"
Carbon Steel Water Well Casing, Black	2" - 4"
Carbon Steel Water Well Casing, Galvanized	2" - 6"
Carbon Steel Water Well Pipe, Black	2" - 6"
Threaded Pipe Couplings, Black	1/2" - 4"
Threaded Pipe Couplings, Galvanized	1/2" - 6"
Water Well Reamed and Drifted Pipe Galvanized	2" - 6"
Water Well Reamed and Drifted Pipe, Black	2" - 6"

CERTIFICATE OF COMPLIANCE

Certificate Number	MH26400
Report Reference	MH26400 -20140315
Issue Date	2020-JANUARY-17
Issued to:	GRUNDFOS HOLDING A/S POUL DUE JENSENS VEJ 7 8850 BJERRINGBRO DENMARK
This certificate confirms that representative samples of	DRINKING WATER SYSTEM COMPONENTS LEAD CONTENT VERIFICATION OF PRODUCTS IN CONTACT WITH POTABLE WATER Refer to addendum page for Models/Product
	Have been investigated by UL in accordance with the Standard(s) indicated on this Certificate.
Standard(s) for Safety:	NSF/ANSI 61–2016, "Drinking Water System Components - Health Effects."
Additional Information:	See the UL Online Certifications Directory at https://iq.ulprospector.com for additional information.

This *Certificate of Compliance* does not provide authorization to apply the UL Mark. Only the UL Follow-Up Services Procedure provides authorization to apply the UL Mark.

Only those products bearing the UL Mark should be considered as being UL Certified and covered under UL's Follow-Up Services.

Look for the UL Certification Mark on the product.

Bruce Mahrenholz, Director North American Certification Program

UL LLC

Any information and documentation involving UL Mark services are provided on behalf of UL LLC (UL) or any authorized licensee of UL. For questions, please contact a local UL Customer Service Representative at http://ul.com/aboutul/locations/

CERTIFICATE OF COMPLIANCE

Certificate Number MH26400
Report Reference MH26400 -20140315
Issue Date 2020-JANUARY-17

This is to certify that representative samples of the product as specified on this certificate were tested according to the current UL requirements.

Trade Designation USC, CNC	Water Use Temperature, (°C)	Size Range
MS6000 Submersible Motor with Lead Assembly	60	For 6" and 8" pumps with minimum flow rate of 40 GPM

Bruce Mahrenholz, Director North American Certification Program

UL LLC

Any Information and documentation involving UL Mark services are provided on behalf of UL LLC (UL) or any authorized licensee of UL. For questions, please contact a local UL Customer Service Representative at http://ul.com/aboutul/locations/

CERTIFICATE OF COMPLIANCE

Certificate Number	20190205-MH26400
Report Reference	MH26400-20190130
Issue Date	2019-FEBRUARY-05
Issued to:	GRUNDFOS HOLDING A/S POUL DUE JENSENS VEJ 7 8850 BJERRINGBRO DENMARK
This certificate confirms that representative samples of	DRINKING WATER SYSTEM COMPONENTS Large Submersible Pump End Family (85S – 1100S) (6", 8" & 10") Models:, 85S # - +, 150S # - +, 230S # - +, 300S # - +, 385S # - +, 475S # - +, 625S # - +, 800S # - +, 1100S # - + # Suffix designates numeric code of 000-5000 for horsepower + Suffix designates numeric code of 0-99 for stages Have been investigated by UL in accordance with the Standard(s) indicated on this Certificate.
Standard(s) for Safety:	NSF/ANSI 61, Drinking Water System Components - Health Effects. NSF/ANSI 372, Drinking Water System Components - Lead Content.
Additional Information:	See the UL Online Certifications Directory at https://iq.ulprospector.com for additional information.

This *Certificate of Compliance* does not provide authorization to apply the UL Mark. Only the UL Follow-Up Services Procedure provides authorization to apply the UL Mark.

Only those products bearing the UL Mark should be considered as being UL Certified and covered under UL's Follow-Up Services.

Look for the UL Certification Mark on the product.

Bruce Mahrenholz, Director North American Certification Program

UL LLC

Any information and documentation involving UL Mark services are provided on behalf of UL LLC (UL) or any authorized licensee of UL. For questions, please contact a local UL Customer Service Representative at http://ul.com/aboutul/locations/

APPENDIX G
14800 W Schulte Preliminary Water Quality Samples

BSK Associates Sacramento
3140 Gold Camp Drive #160
Rancho Cordova, CA 95670
916.853.9293 (Main)
916.853.9297 (FAX)

SDG0157
7/27/2020
Invoice: SD03075

Brett Crews
Schaaf and Wheeler
1171 Homestead Rd., Ste 255
Santa Clara, CA 95050

RE: Report for SDG0157 Water Quality Sampling

Dear Brett Crews,

Thank you for using BSK Associates for your analytical testing needs. In the following pages, you will find the test results for the samples submitted to our laboratory on 7/8/2020. The results have been approved for release by our Laboratory Director as indicated by the authorizing signature below.

The samples were analyzed for the test(s) indicated on the Chain of Custody (see attached) and the results relate only to the samples analyzed. BSK certifies that the testing was performed in accordance with the quality system requirements specified in the 2009 TNI Standard. Any deviations from this standard or from the method requirements for each test procedure performed will be annotated alongside the analytical result or noted in the Case Narrative. Unless otherwise noted, the sample results are reported on an "as received" basis.

This certificate of analysis shall not be reproduced except in full, without written approval of the laboratory.

If additional clarification of any information is required, please contact your Project Manager, Jaime Lee LaFave , at (916) 853-9293.

Thank you again for using BSK Associates. We value your business and appreciate your loyalty.

Sincerely,

Jaime Lee LaFave, Project Manager

BSK ASSOCIATES

Case Narrative

Project and Report Details		Invoice Details	
Client:	Schaaf and Wheeler	**Invoice To:**	Schaaf and Wheeler
Report To:	Brett Crews	**Invoice Attn:**	Brett Crews
Project #:	Water Quality Testing	**Project PO#:**	-
Received:	7/08/2020 - 15:49		
Report Due:	7/29/2020		

Sample Receipt Conditions

Cooler: Default Cooler
Temperature on Receipt ºC: 21.0

Containers Intact
COC/Labels Agree
Received On Blue Ice
Sample(s) arrived at lab on same day sampled.
Sample(s) were received in temperature range.
Initial receipt at BSK-SAC

Data Qualifiers

The following qualifiers have been applied to one or more analytical results:

DL1.0	Sample required a dilution due to the matrix or high concentration of non-target analytes.
MC Notify	Positive Notification: Brett Crews of Schaff and Wheeler notified of positive Total Coliform result at 14:17 on 7/09/2020.
MC.x	Incubated for an additional 2 hours to confirm the absence of E. coli.
MS1.0	Matrix spike recoveries exceed control limits.
MS1.4	Matrix spike recovery data unreliable due to significant parent sample concentration relative to fortification level (>4x).

Report Distribution

Recipient(s)	Report Format	CC:
Brett Crews	FINAL.RPT	

The results in this report apply to the samples analyzed in accordance with the chain of custody document. This analytical report must be reproduced in its entirety.

Certificate of Analysis

Sample ID: SDG0157-01
Sampled By: Brett Crews
Sample Description: 14800 W Schulte, Well 3

Sample Date - Time: 07/08/2020 - 13:55
Matrix: Water
Sample Type: Grab

BSK Associates Laboratory Fresno

General Chemistry

Analyte	Method	Result	RL	Units	RL Mult	Batch	Prepared	Analyzed	Qual
Aggressive Index		**12**				ADG1303	07/22/20	07/22/20	
Alkalinity as CaCO3	SM 2320B	**130**	3.0	mg/L	1	ADG0492	07/10/20	07/10/20	
Bicarbonate as CaCO3	SM 2320B	**130**	3.0	mg/L	1	ADG0492	07/10/20	07/10/20	
Carbonate as CaCO3	SM 2320B	ND	3.0	mg/L	1	ADG0492	07/10/20	07/10/20	
Hydroxide as CaCO3	SM 2320B	ND	3.0	mg/L	1	ADG0492	07/10/20	07/10/20	
Chloride	EPA 300.0	**220**	1.0	mg/L	1	ADG0974	07/18/20	07/18/20	
Conductivity @ 25C	SM 2510B	**1600**	1.0	umhos/cm	1	ADG0492	07/10/20	07/10/20	
Hexavalent Chromium	EPA 218.7	ND	0.050	ug/L	1	ADG0630	07/14/20	07/14/20	
Langelier Index	SM 2330B	**0.36**				ADG1303	07/22/20	07/22/20	
MBAS, Calculated as LAS, mol wt 340	SM 5540C	ND	0.050	mg/L	1	ADG0484	07/09/20 21:25	07/10/20	
Total Dissolved Solids	SM 2540C	**1000**	5.0	mg/L	1	ADG0577	07/13/20	07/16/20	

Metals

Analyte	Method	Result	RL	Units	RL Mult	Batch	Prepared	Analyzed	Qual
Aluminum	EPA 200.7	ND	0.050	mg/L	1	ADG0678	07/14/20	07/16/20	
Antimony	EPA 200.8	ND	2.0	ug/L	1	ADG0678	07/14/20	07/20/20	
Arsenic	EPA 200.8	ND	2.0	ug/L	1	ADG0678	07/14/20	07/20/20	
Barium	EPA 200.7	ND	0.050	mg/L	1	ADG0678	07/14/20	07/16/20	
Beryllium	EPA 200.8	ND	1.0	ug/L	1	ADG0678	07/14/20	07/20/20	
Cadmium	EPA 200.8	ND	1.0	ug/L	1	ADG0678	07/14/20	07/20/20	
Calcium	EPA 200.7	**81**	0.10	mg/L	1	ADG0678	07/14/20	07/16/20	
Chromium	EPA 200.8	**16**	10	ug/L	1	ADG0678	07/14/20	07/20/20	
Copper	EPA 200.8	ND	5.0	ug/L	1	ADG0678	07/14/20	07/20/20	
Iron	EPA 200.7	**0.35**	0.030	mg/L	1	ADG0678	07/14/20	07/16/20	
Lead	EPA 200.8	ND	1.0	ug/L	1	ADG0678	07/14/20	07/20/20	
Magnesium	EPA 200.7	**43**	0.10	mg/L	1	ADG0678	07/14/20	07/16/20	
Manganese	EPA 200.7	**0.015**	0.010	mg/L	1	ADG0678	07/14/20	07/16/20	
Mercury	EPA 200.8	ND	0.20	ug/L	1	ADG0678	07/14/20	07/20/20	
Nickel	EPA 200.8	ND	10	ug/L	1	ADG0678	07/14/20	07/20/20	
Potassium	EPA 200.7	**4.3**	2.0	mg/L	1	ADG0678	07/14/20	07/16/20	
Selenium	EPA 200.8	**7.3**	2.0	ug/L	1	ADG0678	07/14/20	07/20/20	
Silver	EPA 200.8	ND	10	ug/L	1	ADG0678	07/14/20	07/20/20	
Hardness as CaCO3	CALC	**380**	0.66	mg/L					
Thallium	EPA 200.8	ND	1.0	ug/L	1	ADG0678	07/14/20	07/20/20	
Zinc	EPA 200.7	ND	0.050	mg/L	1	ADG0678	07/14/20	07/16/20	

Organics

Analyte	Method	Result	RL	Units	RL Mult	Batch	Prepared	Analyzed	Qual
EDB and DBCP by GC-ECD									
Ethylene Dibromide (EDB)	EPA 504.1	ND	0.020	ug/L	1	ADG0953	07/17/20	07/18/20	
Dibromochloropropane (DBCP)	EPA 504.1	ND	0.010	ug/L	1	ADG0953	07/17/20	07/18/20	

The results in this report apply to the samples analyzed in accordance with the chain of custody document. This analytical report must be reproduced in its entirety.

Certificate of Analysis

Sample ID: SDG0157-01
Sampled By: Brett Crews
Sample Description: 14800 W Schulte, Well 3

Sample Date - Time: 07/08/2020 - 13:55
Matrix: Water
Sample Type: Grab

Organics

Analyte	Method	Result	RL	Units	RL Mult	Batch	Prepared	Analyzed	Qual
Surrogate: 1-Br-2-Nitrobenzene	EPA 504.1	100 %	*Acceptable range: 70-130 %*						
Volatile Organics (SDWA Regulated) by GC-MS									
1,1,1-Trichloroethane	EPA 524.2	ND	0.50	ug/L	1	ADG0936	07/17/20	07/17/20	
1,1,2,2-Tetrachloroethane	EPA 524.2	ND	0.50	ug/L	1	ADG0936	07/17/20	07/17/20	
1,1,2-Trichloro-1,2,2-trifluoroethane	EPA 524.2	ND	10	ug/L	1	ADG0936	07/17/20	07/17/20	
1,1,2-Trichloroethane	EPA 524.2	ND	0.50	ug/L	1	ADG0936	07/17/20	07/17/20	
1,1-Dichloroethane	EPA 524.2	ND	0.50	ug/L	1	ADG0936	07/17/20	07/17/20	
1,1-Dichloroethene	EPA 524.2	ND	0.50	ug/L	1	ADG0936	07/17/20	07/17/20	
1,2,4-Trichlorobenzene	EPA 524.2	ND	0.50	ug/L	1	ADG0936	07/17/20	07/17/20	
1,2-Dichlorobenzene	EPA 524.2	ND	0.50	ug/L	1	ADG0936	07/17/20	07/17/20	
1,2-Dichloroethane	EPA 524.2	ND	0.50	ug/L	1	ADG0936	07/17/20	07/17/20	
1,2-Dichloropropane	EPA 524.2	ND	0.50	ug/L	1	ADG0936	07/17/20	07/17/20	
1,4-Dichlorobenzene	EPA 524.2	ND	0.50	ug/L	1	ADG0936	07/17/20	07/17/20	
Benzene	EPA 524.2	ND	0.50	ug/L	1	ADG0936	07/17/20	07/17/20	
Carbon Tetrachloride	EPA 524.2	ND	0.50	ug/L	1	ADG0936	07/17/20	07/17/20	
Chlorobenzene	EPA 524.2	ND	0.50	ug/L	1	ADG0936	07/17/20	07/17/20	
cis-1,2-Dichloroethene	EPA 524.2	ND	0.50	ug/L	1	ADG0936	07/17/20	07/17/20	
cis-1,3-Dichloropropene	EPA 524.2	ND	0.50	ug/L	1	ADG0936	07/17/20	07/17/20	
Dichloromethane	EPA 524.2	ND	0.50	ug/L	1	ADG0936	07/17/20	07/17/20	
Ethylbenzene	EPA 524.2	ND	0.50	ug/L	1	ADG0936	07/17/20	07/17/20	
m,p-Xylenes	EPA 524.2	ND	0.50	ug/L	1	ADG0936	07/17/20	07/17/20	
Methyl-t-butyl ether	EPA 524.2	ND	0.50	ug/L	1	ADG0936	07/17/20	07/17/20	
o-Xylene	EPA 524.2	ND	0.50	ug/L	1	ADG0936	07/17/20	07/17/20	
Styrene	EPA 524.2	ND	0.50	ug/L	1	ADG0936	07/17/20	07/17/20	
Tetrachloroethene (PCE)	EPA 524.2	ND	0.50	ug/L	1	ADG0936	07/17/20	07/17/20	
Toluene	EPA 524.2	**0.82**	0.50	ug/L	1	ADG0936	07/17/20	07/17/20	
trans-1,2-Dichloroethene	EPA 524.2	ND	0.50	ug/L	1	ADG0936	07/17/20	07/17/20	
trans-1,3-Dichloropropene	EPA 524.2	ND	0.50	ug/L	1	ADG0936	07/17/20	07/17/20	
Trichloroethene (TCE)	EPA 524.2	ND	0.50	ug/L	1	ADG0936	07/17/20	07/17/20	
Trichlorofluoromethane	EPA 524.2	ND	5.0	ug/L	1	ADG0936	07/17/20	07/17/20	
Vinyl Chloride	EPA 524.2	ND	0.50	ug/L	1	ADG0936	07/17/20	07/17/20	
Surrogate: 1,2-Dichlorobenzene-d4	EPA 524.2	106 %	*Acceptable range: 70-130 %*						
Surrogate: Bromofluorobenzene	EPA 524.2	114 %	*Acceptable range: 70-130 %*						
Total 1,3-Dichloropropene		ND	0.50	ug/L					
Total Xylenes, EPA 524.2		ND	0.50	ug/L					
Semi-Volatile Organics by GC-MS									
Thiobencarb	EPA 525.3	ND	1.0	ug/L	1	ADG0753	07/15/20	07/17/20	
Surrogate: 1,3-Dimethyl-2-nitrobenzene	EPA 525.3	94 %	*Acceptable range: 70-130 %*						
Surrogate: Benzo(a)pyrene-d12	EPA 525.3	94 %	*Acceptable range: 70-130 %*						
Surrogate: Triphenyl Phosphate	EPA 525.3	107 %	*Acceptable range: 70-130 %*						
1,2,3-Trichloropropane by GC-MS SIM									
1,2,3-Trichloropropane	SRL 524M-TCP	ND	0.0050	ug/L	1	ADG0478	07/09/20	07/10/20	

The results in this report apply to the samples analyzed in accordance with the chain of custody document. This analytical report must be reproduced in its entirety.

Certificate of Analysis

Sample ID: SDG0157-01
Sampled By: Brett Crews
Sample Description: 14800 W Schulte, Well 3

Sample Date - Time: 07/08/2020 - 13:55
Matrix: Water
Sample Type: Grab

BSK Associates Sacramento

General Chemistry

Analyte	Method	Result	RL	Units	RL Mult	Batch	Prepared	Analyzed	Qual
Color, Apparent	SM 2120B	**5.0**	5.0	CU	1	SDG0026	07/08/20 16:39	07/08/20	
Color pH (1)	SM 4500-H+ B	**8.0**		pH Units	1	SDG0026	07/08/20	07/08/20	
Fluoride	EPA 300.0	**0.11**	0.10	mg/L	1	SDG0023	07/08/20	07/08/20	
Nitrate + Nitrite as N	EPA 300.0	**5.8**	0.23	mg/L	1	SDG0023	07/08/20 18:44	07/08/20	
Nitrate as N	EPA 300.0	**5.8**	0.23	mg/L	1	SDG0023	07/08/20 18:44	07/08/20	
Nitrite as N	EPA 300.0	ND	0.050	mg/L	1	SDG0023	07/08/20 18:44	07/08/20	
Threshold Odor	SM 2150B	ND	1.0	T.O.N.	1	SDG0037	07/08/20 16:28	07/08/20	
pH (1)	SM 4500-H+ B	**8.0**		pH Units	1	SDG0025	07/08/20	07/08/20	
pH Temperature in °C		**22.7**							
Sulfate as SO4	EPA 300.0	**320**	5.0	mg/L	10	SDG0031	07/09/20	07/09/20	
Turbidity	SM 2130B	**1.7**	0.10	NTU	1	SDG0026	07/08/20 16:39	07/08/20	

Metals

Analyte	Method	Result	RL	Units	RL Mult	Batch	Prepared	Analyzed	Qual
Sodium	EPA 200.7	**210**	1.0	mg/L	1	ADG0678	07/14/20	07/16/20	MS1.4

Microbiology

Analyte	Method	Result	Units	Batch	Prepared	Analyzed	Qual
Coliform, Presence/Absence by Colilert							
E. Coli	SM 9223B	**Absent**	/100 mL	SDG0028	07/08/20 17:24	07/09/20 13:30	MC.x
Total Coliform	SM 9223B	**Present**	/100 mL	SDG0028	07/08/20 17:24	07/09/20 13:30	MC Notify

The results in this report apply to the samples analyzed in accordance with the chain of custody document. This analytical report must be reproduced in its entirety.

Certificate of Analysis

Sample ID: SDG0157-01RE2
Sampled By: Brett Crews
Sample Description: 14800 W Schulte, Well 3

Sample Date - Time: 07/08/2020 - 13:55
Matrix: Water
Sample Type: Grab

BSK Associates Laboratory Fresno

General Chemistry

Analyte	Method	Result	RL	Units	RL Mult	Batch	Prepared	Analyzed	Qual
Perchlorate	EPA 314.0	ND	4.0	ug/L	2	ADG1405	07/25/20	07/25/20	DL1.0

The results in this report apply to the samples analyzed in accordance with the chain of custody document. This analytical report must be reproduced in its entirety.

Certificate of Analysis

Sample ID: SDG0157-03
Sampled By: BSK
Sample Description: 504 TB- 0620031

Sample Date - Time: 07/07/2020 - 00:00
Matrix: Water
Sample Type: Trip Blank

BSK Associates Laboratory Fresno

Organics

Analyte	Method	Result	RL	Units	RL Mult	Batch	Prepared	Analyzed	Qual
EDB and DBCP by GC-ECD									
Ethylene Dibromide (EDB)	EPA 504.1	ND	0.020	ug/L	1	ADG0746	07/15/20	07/16/20	
Dibromochloropropane (DBCP)	EPA 504.1	ND	0.010	ug/L	1	ADG0746	07/15/20	07/16/20	
Surrogate: 1-Br-2-Nitrobenzene	EPA 504.1	97 %	*Acceptable range: 70-130 %*						

The results in this report apply to the samples analyzed in accordance with the chain of custody document. This analytical report must be reproduced in its entirety.

Certificate of Analysis

Sample ID: SDG0157-04
Sampled By: BSK
Sample Description: 524 TB- 0620037

Sample Date - Time: 07/07/2020 - 00:00
Matrix: Water
Sample Type: Trip Blank

BSK Associates Laboratory Fresno

Organics

Analyte	Method	Result	RL	Units	RL Mult	Batch	Prepared	Analyzed	Qual
Volatile Organics (SDWA Regulated) by GC-MS									
1,1,1-Trichloroethane	EPA 524.2	ND	0.50	ug/L	1	ADG0936	07/17/20	07/17/20	
1,1,2,2-Tetrachloroethane	EPA 524.2	ND	0.50	ug/L	1	ADG0936	07/17/20	07/17/20	
1,1,2-Trichloro-1,2,2-trifluoroethane	EPA 524.2	ND	10	ug/L	1	ADG0936	07/17/20	07/17/20	
1,1,2-Trichloroethane	EPA 524.2	ND	0.50	ug/L	1	ADG0936	07/17/20	07/17/20	
1,1-Dichloroethane	EPA 524.2	ND	0.50	ug/L	1	ADG0936	07/17/20	07/17/20	
1,1-Dichloroethene	EPA 524.2	ND	0.50	ug/L	1	ADG0936	07/17/20	07/17/20	
1,2,4-Trichlorobenzene	EPA 524.2	ND	0.50	ug/L	1	ADG0936	07/17/20	07/17/20	
1,2-Dichlorobenzene	EPA 524.2	ND	0.50	ug/L	1	ADG0936	07/17/20	07/17/20	
1,2-Dichloroethane	EPA 524.2	ND	0.50	ug/L	1	ADG0936	07/17/20	07/17/20	
1,2-Dichloropropane	EPA 524.2	ND	0.50	ug/L	1	ADG0936	07/17/20	07/17/20	
1,4-Dichlorobenzene	EPA 524.2	ND	0.50	ug/L	1	ADG0936	07/17/20	07/17/20	
Benzene	EPA 524.2	ND	0.50	ug/L	1	ADG0936	07/17/20	07/17/20	
Carbon Tetrachloride	EPA 524.2	ND	0.50	ug/L	1	ADG0936	07/17/20	07/17/20	
Chlorobenzene	EPA 524.2	ND	0.50	ug/L	1	ADG0936	07/17/20	07/17/20	
cis-1,2-Dichloroethene	EPA 524.2	ND	0.50	ug/L	1	ADG0936	07/17/20	07/17/20	
cis-1,3-Dichloropropene	EPA 524.2	ND	0.50	ug/L	1	ADG0936	07/17/20	07/17/20	
Dichloromethane	EPA 524.2	ND	0.50	ug/L	1	ADG0936	07/17/20	07/17/20	
Ethylbenzene	EPA 524.2	ND	0.50	ug/L	1	ADG0936	07/17/20	07/17/20	
m,p-Xylenes	EPA 524.2	ND	0.50	ug/L	1	ADG0936	07/17/20	07/17/20	
Methyl-t-butyl ether	EPA 524.2	ND	0.50	ug/L	1	ADG0936	07/17/20	07/17/20	
o-Xylene	EPA 524.2	ND	0.50	ug/L	1	ADG0936	07/17/20	07/17/20	
Styrene	EPA 524.2	ND	0.50	ug/L	1	ADG0936	07/17/20	07/17/20	
Tetrachloroethene (PCE)	EPA 524.2	ND	0.50	ug/L	1	ADG0936	07/17/20	07/17/20	
Toluene	EPA 524.2	ND	0.50	ug/L	1	ADG0936	07/17/20	07/17/20	
trans-1,2-Dichloroethene	EPA 524.2	ND	0.50	ug/L	1	ADG0936	07/17/20	07/17/20	
trans-1,3-Dichloropropene	EPA 524.2	ND	0.50	ug/L	1	ADG0936	07/17/20	07/17/20	
Trichloroethene (TCE)	EPA 524.2	ND	0.50	ug/L	1	ADG0936	07/17/20	07/17/20	
Trichlorofluoromethane	EPA 524.2	ND	5.0	ug/L	1	ADG0936	07/17/20	07/17/20	
Vinyl Chloride	EPA 524.2	ND	0.50	ug/L	1	ADG0936	07/17/20	07/17/20	
Surrogate: 1,2-Dichlorobenzene-d4	EPA 524.2	102 %	*Acceptable range: 70-130 %*						
Surrogate: Bromofluorobenzene	EPA 524.2	111 %	*Acceptable range: 70-130 %*						
Total 1,3-Dichloropropene		ND	0.50	ug/L					
Total Xylenes, EPA 524.2		ND	0.50	ug/L					

The results in this report apply to the samples analyzed in accordance with the chain of custody document. This analytical report must be reproduced in its entirety.

BSK Associates Laboratory Fresno

General Chemistry Quality Control Report

Analyte	Result	RL	Units	Spike Level	Source Result	%REC	%REC Limits	RPD	RPD Limit	Date Analyzed	Qual
EPA 218.7 - Quality Control											
Batch: ADG0630										Prepared: 7/14/2020	
Prep Method: Method Specific Preparation										Analyst: CEG	
Blank (ADG0630-BLK1)											
Hexavalent Chromium	ND	0.050	ug/L							07/14/20	
Blank Spike (ADG0630-BS1)											
Hexavalent Chromium	0.054	0.050	ug/L	0.050	ND	108	50-150			07/14/20	
Matrix Spike (ADG0630-MS1), Source: ADG1262-01											
Hexavalent Chromium	2.5	0.050	ug/L	2.0	0.67	91	85-115			07/14/20	
Matrix Spike Dup (ADG0630-MSD1), Source: ADG1262-01											
Hexavalent Chromium	2.6	0.050	ug/L	2.0	0.67	97	85-115	5	15	07/14/20	
EPA 300.0 - Quality Control											
Batch: ADG0974										Prepared: 7/17/2020	
Prep Method: Method Specific Preparation										Analyst: BCB	
Blank (ADG0974-BLK1)											
Chloride	ND	1.0	mg/L							07/17/20	
Blank Spike (ADG0974-BS1)											
Chloride	100	1.0	mg/L	100	ND	105	90-110			07/17/20	
Matrix Spike (ADG0974-MS1), Source: ADG1985-01											
Chloride	73	1.0	mg/L	50	18	111	80-120			07/17/20	
Matrix Spike (ADG0974-MS2), Source: ADG1939-01											
Chloride	79	1.0	mg/L	50	25	108	80-120			07/18/20	
Matrix Spike Dup (ADG0974-MSD1), Source: ADG1985-01											
Chloride	74	1.0	mg/L	50	18	113	80-120	1	20	07/17/20	
Matrix Spike Dup (ADG0974-MSD2), Source: ADG1939-01											
Chloride	80	1.0	mg/L	50	25	110	80-120	1	20	07/18/20	
EPA 314.0 - Quality Control											
Batch: ADG1145										Prepared: 7/22/2020	
Prep Method: Method Specific Preparation										Analyst: SEL	
Blank Spike (ADG1145-BS1)											
Perchlorate	15	2.0	ug/L	15	ND	101	85-115			07/22/20	
Matrix Spike (ADG1145-MS1), Source: SDG0203-02											
Perchlorate	4.0	2.0	ug/L	5.0	ND	80	80-120			07/23/20	
Matrix Spike Dup (ADG1145-MSD1), Source: SDG0203-02											

The results in this report apply to the samples analyzed in accordance with the chain of custody document. This analytical report must be reproduced in its entirety.

BSK Associates Laboratory Fresno

General Chemistry Quality Control Report

Analyte	Result	RL	Units	Spike Level	Source Result	%REC	%REC Limits	RPD	RPD Limit	Date Analyzed	Qual
EPA 314.0 - Quality Control											
Batch: ADG1145										Prepared: 7/23/2020	
Prep Method: Method Specific Preparation										Analyst: SEL	
Matrix Spike Dup (ADG1145-MSD1), Source: SDG0203-02											
Perchlorate	4.4	2.0	ug/L	5.0	ND	87	80-120	8	15	07/23/20	
EPA 314.0 - Quality Control											
Batch: ADG1405										Prepared: 7/24/2020	
Prep Method: Method Specific Preparation										Analyst: SEL	
Blank (ADG1405-BLK1)											
Perchlorate	ND	2.0	ug/L							07/24/20	
Blank Spike (ADG1405-BS1)											
Perchlorate	15	2.0	ug/L	15	ND	103	85-115			07/24/20	
Matrix Spike (ADG1405-MS1), Source: ADG2314-04											
Perchlorate	5.1	2.0	ug/L	5.0	ND	103	80-120			07/24/20	MS1.0
Matrix Spike Dup (ADG1405-MSD1), Source: ADG2314-04											
Perchlorate	4.9	2.0	ug/L	5.0	ND	98	80-120	4	15	07/24/20	MS1.0
SM 2320B - Quality Control											
Batch: ADG0492										Prepared: 7/10/2020	
Prep Method: Method Specific Preparation										Analyst: CEG	
Blank (ADG0492-BLK1)											
Alkalinity as CaCO3	ND	3.0	mg/L							07/10/20	
Bicarbonate as CaCO3	ND	3.0	mg/L							07/10/20	
Carbonate as CaCO3	ND	3.0	mg/L							07/10/20	
Hydroxide as CaCO3	ND	3.0	mg/L							07/10/20	
Blank Spike (ADG0492-BS1)											
Alkalinity as CaCO3	96	3.0	mg/L	100	ND	96	80-120			07/10/20	
Blank Spike Dup (ADG0492-BSD1)											
Alkalinity as CaCO3	96	3.0	mg/L	100	ND	96	80-120	0	20	07/10/20	
Duplicate (ADG0492-DUP1), Source: ADG0996-01											
Alkalinity as CaCO3	110	3.0	mg/L		110			3	10	07/10/20	
Bicarbonate as CaCO3	110	3.0	mg/L		110			3	10	07/10/20	
Carbonate as CaCO3	ND	3.0	mg/L		ND				10	07/10/20	
Hydroxide as CaCO3	ND	3.0	mg/L		ND				10	07/10/20	
SM 2510B - Quality Control											
Batch: ADG0492										Prepared: 7/10/2020	
Prep Method: Method Specific Preparation										Analyst: CEG	

The results in this report apply to the samples analyzed in accordance with the chain of custody document. This analytical report must be reproduced in its entirety.

BSK Associates Laboratory Fresno

General Chemistry Quality Control Report

Analyte	Result	RL	Units	Spike Level	Source Result	%REC	%REC Limits	RPD	RPD Limit	Date Analyzed	Qual
SM 2510B - Quality Control											
Batch: ADG0492										Prepared: 7/10/2020	
Prep Method: Method Specific Preparation										Analyst: CEG	
Blank Spike (ADG0492-BS1)											
Conductivity @ 25C	1400	1.0	umhos/cm	1400	ND	100	90-110			07/10/20	
Blank Spike Dup (ADG0492-BSD1)											
Conductivity @ 25C	1400	1.0	umhos/cm	1400	ND	99	90-110	0	5	07/10/20	
Duplicate (ADG0492-DUP1), Source: ADG0996-01											
Conductivity @ 25C	660	1.0	umhos/cm		670			1	5	07/10/20	
SM 2540C - Quality Control											
Batch: ADG0577										Prepared: 7/13/2020	
Prep Method: Method Specific Preparation										Analyst: SYY	
Blank (ADG0577-BLK1)											
Total Dissolved Solids	ND	5.0	mg/L							07/16/20	
Blank Spike (ADG0577-BS1)											
Total Dissolved Solids	1000		mg/L	1000		100	70-130			07/16/20	
Duplicate (ADG0577-DUP1), Source: ADG0800-01											
Total Dissolved Solids	780	5.0	mg/L		740			5	10	07/16/20	
Duplicate (ADG0577-DUP2), Source: SDG0139-01											
Total Dissolved Solids	320	5.0	mg/L		310			1	10	07/16/20	
SM 5540C - Quality Control											
Batch: ADG0484										Prepared: 7/9/2020	
Prep Method: Method Specific Preparation										Analyst: SYY	
Blank (ADG0484-BLK1)											
MBAS, Calculated as LAS, mol wt 340	ND	0.050	mg/L							07/09/20	
Blank Spike (ADG0484-BS1)											
MBAS, Calculated as LAS, mol wt 340	1.0	0.050	mg/L	1.0	ND	102	82-112			07/09/20	
Blank Spike Dup (ADG0484-BSD1)											
MBAS, Calculated as LAS, mol wt 340	1.0	0.050	mg/L	1.0	ND	101	82-112	0	20	07/09/20	
Matrix Spike (ADG0484-MS1), Source: RDG0050-02											
MBAS, Calculated as LAS, mol wt 340	0.92	0.050	mg/L	1.0	0.051	87	80-112			07/09/20	
Matrix Spike Dup (ADG0484-MSD1), Source: RDG0050-02											
MBAS, Calculated as LAS, mol wt 340	0.92	0.050	mg/L	1.0	0.051	87	80-112	0	20	07/09/20	

The results in this report apply to the samples analyzed in accordance with the chain of custody document. This analytical report must be reproduced in its entirety.

BSK Associates Laboratory Fresno

Metals Quality Control Report

Analyte	Result	RL	Units	Spike Level	Source Result	%REC	%REC Limits	RPD	RPD Limit	Date Analyzed	Qual
EPA 200.7 - Quality Control											
Batch: ADG0678										Prepared: 7/14/2020	
Prep Method: EPA 200.2										Analyst: mds	
Blank (ADG0678-BLK2)											
Aluminum	ND	0.050	mg/L							07/16/20	
Barium	ND	0.050	mg/L							07/16/20	
Calcium	ND	0.10	mg/L							07/16/20	
Iron	ND	0.030	mg/L							07/16/20	
Potassium	ND	2.0	mg/L							07/16/20	
Magnesium	ND	0.10	mg/L							07/16/20	
Manganese	ND	0.010	mg/L							07/16/20	
Zinc	ND	0.050	mg/L							07/16/20	
Blank Spike (ADG0678-BS2)											
Aluminum	0.21	0.050	mg/L	0.20	ND	103	85-115			07/16/20	
Barium	0.21	0.050	mg/L	0.20	ND	107	85-115			07/16/20	
Calcium	3.8	0.10	mg/L	4.0	ND	95	85-115			07/16/20	
Iron	0.20	0.030	mg/L	0.20	ND	99	85-115			07/16/20	
Potassium	4.0	2.0	mg/L	4.0	ND	99	85-115			07/16/20	
Magnesium	4.1	0.10	mg/L	4.0	ND	102	85-115			07/16/20	
Manganese	0.20	0.010	mg/L	0.20	ND	102	85-115			07/16/20	
Zinc	0.20	0.050	mg/L	0.20	ND	99	85-115			07/16/20	
Blank Spike Dup (ADG0678-BSD2)											
Aluminum	0.20	0.050	mg/L	0.20	ND	101	85-115	2	20	07/16/20	
Barium	0.21	0.050	mg/L	0.20	ND	106	85-115	1	20	07/16/20	
Calcium	3.9	0.10	mg/L	4.0	ND	97	85-115	2	20	07/16/20	
Iron	0.20	0.030	mg/L	0.20	ND	101	85-115	2	20	07/16/20	
Potassium	3.9	2.0	mg/L	4.0	ND	98	85-115	1	20	07/16/20	
Magnesium	4.2	0.10	mg/L	4.0	ND	105	85-115	3	20	07/16/20	
Manganese	0.21	0.010	mg/L	0.20	ND	104	85-115	2	20	07/16/20	
Zinc	0.20	0.050	mg/L	0.20	ND	101	85-115	2	20	07/16/20	
Matrix Spike (ADG0678-MS3), Source: RDG0050-02											
Aluminum	0.22	0.050	mg/L	0.20	ND	112	70-130			07/16/20	
Barium	0.27	0.050	mg/L	0.20	0.052	108	70-130			07/16/20	
Calcium	66	0.10	mg/L	4.0	62	80	70-130			07/16/20	
Iron	0.21	0.030	mg/L	0.20	ND	105	70-130			07/16/20	
Potassium	25	2.0	mg/L	4.0	21	110	70-130			07/16/20	
Magnesium	32	0.10	mg/L	4.0	28	106	70-130			07/16/20	
Manganese	0.20	0.010	mg/L	0.20	ND	101	70-130			07/16/20	
Zinc	0.25	0.050	mg/L	0.20	ND	100	70-130			07/16/20	
Matrix Spike (ADG0678-MS4), Source: SDG0157-01											
Aluminum	0.23	0.050	mg/L	0.20	ND	116	70-130			07/16/20	
Barium	0.25	0.050	mg/L	0.20	ND	107	70-130			07/16/20	
Calcium	85	0.10	mg/L	4.0	81	104	70-130			07/16/20	

The results in this report apply to the samples analyzed in accordance with the chain of custody document. This analytical report must be reproduced in its entirety.

BSK Associates Laboratory Fresno

Metals Quality Control Report

Analyte	Result	RL	Units	Spike Level	Source Result	%REC	%REC Limits	RPD	RPD Limit	Date Analyzed	Qual
EPA 200.7 - Quality Control											
Batch: ADG0678										Prepared: 7/14/2020	
Prep Method: EPA 200.2										Analyst: mds	
Matrix Spike (ADG0678-MS4), Source: SDG0157-01											
Iron	0.56	0.030	mg/L	0.20	0.35	103	70-130			07/16/20	
Potassium	8.9	2.0	mg/L	4.0	4.3	115	70-130			07/16/20	
Magnesium	46	0.10	mg/L	4.0	43	72	70-130			07/16/20	
Manganese	0.22	0.010	mg/L	0.20	0.015	104	70-130			07/16/20	
Zinc	0.22	0.050	mg/L	0.20	ND	110	70-130			07/16/20	
Matrix Spike Dup (ADG0678-MSD3), Source: RDG0050-02											
Aluminum	0.21	0.050	mg/L	0.20	ND	105	70-130	6	20	07/16/20	
Barium	0.26	0.050	mg/L	0.20	0.052	106	70-130	1	20	07/16/20	
Calcium	68	0.10	mg/L	4.0	62	136	70-130	3	20	07/16/20	MS1.0 ***High***
Iron	0.22	0.030	mg/L	0.20	ND	108	70-130	2	20	07/16/20	
Potassium	25	2.0	mg/L	4.0	21	98	70-130	2	20	07/16/20	
Magnesium	33	0.10	mg/L	4.0	28	132	70-130	3	20	07/16/20	MS1.0 ***High***
Manganese	0.21	0.010	mg/L	0.20	ND	104	70-130	3	20	07/16/20	
Zinc	0.26	0.050	mg/L	0.20	ND	105	70-130	3	20	07/16/20	
Matrix Spike Dup (ADG0678-MSD4), Source: SDG0157-01											
Aluminum	0.22	0.050	mg/L	0.20	ND	109	70-130	6	20	07/16/20	
Barium	0.25	0.050	mg/L	0.20	ND	106	70-130	0	20	07/16/20	
Calcium	86	0.10	mg/L	4.0	81	112	70-130	0	20	07/16/20	
Iron	0.55	0.030	mg/L	0.20	0.35	103	70-130	0	20	07/16/20	
Potassium	9.1	2.0	mg/L	4.0	4.3	119	70-130	2	20	07/16/20	
Magnesium	46	0.10	mg/L	4.0	43	71	70-130	0	20	07/16/20	
Manganese	0.22	0.010	mg/L	0.20	0.015	102	70-130	2	20	07/16/20	
Zinc	0.22	0.050	mg/L	0.20	ND	108	70-130	1	20	07/16/20	
EPA 200.8 - Quality Control											
Batch: ADG0678										Prepared: 7/14/2020	
Prep Method: EPA 200.2										Analyst: VVW	
Blank (ADG0678-BLK1)											
Beryllium	ND	1.0	ug/L							07/20/20	
Chromium	ND	10	ug/L							07/20/20	
Nickel	ND	10	ug/L							07/20/20	
Copper	ND	5.0	ug/L							07/20/20	
Arsenic	ND	2.0	ug/L							07/20/20	
Selenium	ND	2.0	ug/L							07/20/20	
Silver	ND	10	ug/L							07/20/20	
Cadmium	ND	1.0	ug/L							07/20/20	
Antimony	ND	2.0	ug/L							07/20/20	
Thallium	ND	1.0	ug/L							07/20/20	
Lead	ND	1.0	ug/L							07/20/20	
Mercury	ND	0.20	ug/L							07/20/20	

The results in this report apply to the samples analyzed in accordance with the chain of custody document. This analytical report must be reproduced in its entirety.

BSK Associates Laboratory Fresno

Metals Quality Control Report

Analyte	Result	RL	Units	Spike Level	Source Result	%REC	%REC Limits	RPD	RPD Limit	Date Analyzed	Qual
EPA 200.8 - Quality Control											
Batch: ADG0678										Prepared: 7/14/2020	
Prep Method: EPA 200.2										Analyst: VVW	
Blank Spike (ADG0678-BS1)											
Beryllium	200	1.0	ug/L	200	ND	102	85-115			07/20/20	
Chromium	200	10	ug/L	200	ND	101	85-115			07/20/20	
Nickel	200	10	ug/L	200	ND	102	85-115			07/20/20	
Copper	200	5.0	ug/L	200	ND	99	85-115			07/20/20	
Arsenic	200	2.0	ug/L	200	ND	100	85-115			07/20/20	
Selenium	190	2.0	ug/L	200	ND	95	85-115			07/20/20	
Silver	93	10	ug/L	100	ND	93	75-125			07/20/20	
Cadmium	210	1.0	ug/L	200	ND	103	85-115			07/20/20	
Antimony	210	2.0	ug/L	200	ND	107	85-115			07/20/20	
Thallium	180	1.0	ug/L	200	ND	91	85-115			07/20/20	
Lead	200	1.0	ug/L	200	ND	98	85-115			07/20/20	
Mercury	5.1	0.20	ug/L	5.0	ND	101	85-115			07/20/20	
Blank Spike Dup (ADG0678-BSD1)											
Beryllium	210	1.0	ug/L	200	ND	103	85-115	1	20	07/20/20	
Chromium	200	10	ug/L	200	ND	102	85-115	0	20	07/20/20	
Nickel	210	10	ug/L	200	ND	103	85-115	1	20	07/20/20	
Copper	200	5.0	ug/L	200	ND	100	85-115	1	20	07/20/20	
Arsenic	200	2.0	ug/L	200	ND	101	85-115	0	20	07/20/20	
Selenium	190	2.0	ug/L	200	ND	95	85-115	0	20	07/20/20	
Silver	91	10	ug/L	100	ND	91	75-125	2	20	07/20/20	
Cadmium	210	1.0	ug/L	200	ND	103	85-115	0	20	07/20/20	
Antimony	210	2.0	ug/L	200	ND	106	85-115	1	20	07/20/20	
Thallium	180	1.0	ug/L	200	ND	92	85-115	0	20	07/20/20	
Lead	200	1.0	ug/L	200	ND	98	85-115	0	20	07/20/20	
Mercury	5.2	0.20	ug/L	5.0	ND	104	85-115	3	20	07/20/20	
Matrix Spike (ADG0678-MS2), Source: SDG0157-01											
Beryllium	210	1.0	ug/L	200	ND	106	70-130			07/20/20	
Chromium	220	10	ug/L	200	16	104	70-130			07/20/20	
Nickel	200	10	ug/L	200	ND	99	70-130			07/20/20	
Copper	190	5.0	ug/L	200	ND	94	70-130			07/20/20	
Arsenic	210	2.0	ug/L	200	ND	105	70-130			07/20/20	
Selenium	210	2.0	ug/L	200	7.3	101	70-130			07/20/20	
Silver	84	10	ug/L	100	ND	84	70-130			07/20/20	
Cadmium	200	1.0	ug/L	200	ND	98	70-130			07/20/20	
Antimony	220	2.0	ug/L	200	ND	108	70-130			07/20/20	
Thallium	180	1.0	ug/L	200	ND	89	70-130			07/20/20	
Lead	190	1.0	ug/L	200	ND	95	70-130			07/20/20	
Mercury	5.1	0.20	ug/L	5.0	ND	101	70-130			07/20/20	
Matrix Spike Dup (ADG0678-MSD2), Source: SDG0157-01											
Beryllium	210	1.0	ug/L	200	ND	106	70-130	0	20	07/20/20	

The results in this report apply to the samples analyzed in accordance with the chain of custody document. This analytical report must be reproduced in its entirety.

BSK Associates Laboratory Fresno

Metals Quality Control Report

Analyte	Result	RL	Units	Spike Level	Source Result	%REC	%REC Limits	RPD	RPD Limit	Date Analyzed	Qual
EPA 200.8 - Quality Control											
Batch: ADG0678										Prepared: 7/14/2020	
Prep Method: EPA 200.2										Analyst: VVW	
Matrix Spike Dup (ADG0678-MSD2), Source: SDG0157-01											
Chromium	220	10	ug/L	200	16	104	70-130	0	20	07/20/20	
Nickel	200	10	ug/L	200	ND	99	70-130	1	20	07/20/20	
Copper	190	5.0	ug/L	200	ND	94	70-130	0	20	07/20/20	
Arsenic	210	2.0	ug/L	200	ND	105	70-130	0	20	07/20/20	
Selenium	200	2.0	ug/L	200	7.3	95	70-130	6	20	07/20/20	
Silver	83	10	ug/L	100	ND	83	70-130	2	20	07/20/20	
Cadmium	200	1.0	ug/L	200	ND	98	70-130	1	20	07/20/20	
Antimony	210	2.0	ug/L	200	ND	106	70-130	1	20	07/20/20	
Thallium	180	1.0	ug/L	200	ND	88	70-130	1	20	07/20/20	
Lead	190	1.0	ug/L	200	ND	94	70-130	0	20	07/20/20	
Mercury	5.0	0.20	ug/L	5.0	ND	100	70-130	2	20	07/20/20	

The results in this report apply to the samples analyzed in accordance with the chain of custody document. This analytical report must be reproduced in its entirety.

BSK Associates Laboratory Fresno

Organics Quality Control Report

Analyte	Result	RL	Units	Spike Level	Source Result	%REC	%REC Limits	RPD	RPD Limit	Date Analyzed	Qual
EPA 504.1 - Quality Control											
Batch: ADG0746										Prepared: 7/15/2020	
Prep Method: EPA 504/505										Analyst: JKH	
Blank (ADG0746-BLK1)											
Ethylene Dibromide (EDB)	ND	0.020	ug/L							07/15/20	
Dibromochloropropane (DBCP)	ND	0.010	ug/L							07/15/20	
Surrogate: 1-Br-2-Nitrobenzene	*0.37*			*0.46*		*82*	*70-130*			07/15/20	
Blank Spike (ADG0746-BS1)											
Ethylene Dibromide (EDB)	0.10	0.020	ug/L	0.10	ND	102	70-130			07/15/20	
Dibromochloropropane (DBCP)	0.088	0.010	ug/L	0.10	ND	88	70-130			07/15/20	
Surrogate: 1-Br-2-Nitrobenzene	*0.36*			*0.46*		*80*	*70-130*			07/15/20	
Blank Spike Dup (ADG0746-BSD1)											
Ethylene Dibromide (EDB)	0.10	0.020	ug/L	0.10	ND	105	70-130	3	20	07/16/20	
Dibromochloropropane (DBCP)	0.093	0.010	ug/L	0.10	ND	93	70-130	5	20	07/16/20	
Surrogate: 1-Br-2-Nitrobenzene	*0.39*			*0.46*		*85*	*70-130*			07/16/20	
Matrix Spike (ADG0746-MS1), Source: ADG1474-04											
Ethylene Dibromide (EDB)	0.095	0.020	ug/L	0.10	ND	95	65-135			07/15/20	
Dibromochloropropane (DBCP)	0.094	0.010	ug/L	0.10	0.017	77	65-135			07/15/20	
Surrogate: 1-Br-2-Nitrobenzene	*0.33*			*0.46*		*71*	*70-130*			07/15/20	
EPA 504.1 - Quality Control											
Batch: ADG0953										Prepared: 7/17/2020	
Prep Method: EPA 504/505										Analyst: JKH	
Blank (ADG0953-BLK1)											
Ethylene Dibromide (EDB)	ND	0.020	ug/L							07/18/20	
Dibromochloropropane (DBCP)	ND	0.010	ug/L							07/18/20	
Surrogate: 1-Br-2-Nitrobenzene	*0.47*			*0.46*		*103*	*70-130*			07/18/20	
Blank Spike (ADG0953-BS1)											
Ethylene Dibromide (EDB)	0.092	0.020	ug/L	0.10	ND	92	70-130			07/18/20	
Dibromochloropropane (DBCP)	0.085	0.010	ug/L	0.10	ND	85	70-130			07/18/20	
Surrogate: 1-Br-2-Nitrobenzene	*0.44*			*0.46*		*97*	*70-130*			07/18/20	
Blank Spike Dup (ADG0953-BSD1)											
Ethylene Dibromide (EDB)	0.10	0.020	ug/L	0.10	ND	100	70-130	9	20	07/18/20	
Dibromochloropropane (DBCP)	0.094	0.010	ug/L	0.10	ND	94	70-130	10	20	07/18/20	
Surrogate: 1-Br-2-Nitrobenzene	*0.48*			*0.46*		*104*	*70-130*			07/18/20	
Matrix Spike (ADG0953-MS1), Source: ADG0782-05											
Ethylene Dibromide (EDB)	0.10	0.020	ug/L	0.10	ND	100	65-135			07/18/20	
Dibromochloropropane (DBCP)	0.095	0.010	ug/L	0.10	ND	94	65-135			07/18/20	
Surrogate: 1-Br-2-Nitrobenzene	*0.47*			*0.46*		*103*	*70-130*			07/18/20	

The results in this report apply to the samples analyzed in accordance with the chain of custody document. This analytical report must be reproduced in its entirety.

BSK Associates Laboratory Fresno

Organics Quality Control Report

Analyte	Result	RL	Units	Spike Level	Source Result	%REC	%REC Limits	RPD	RPD Limit	Date Analyzed	Qual
EPA 524.2 - Quality Control											
Batch: ADG0936										Prepared: 7/17/2020	
Prep Method: EPA 524.2										Analyst: ANM	
Blank (ADG0936-BLK1)											
1,1,1-Trichloroethane	ND	0.50	ug/L							07/17/20	
1,1,2,2-Tetrachloroethane	ND	0.50	ug/L							07/17/20	
1,1,2-Trichloro-1,2,2-trifluoroethane	ND	10	ug/L							07/17/20	
1,1,2-Trichloroethane	ND	0.50	ug/L							07/17/20	
1,1-Dichloroethane	ND	0.50	ug/L							07/17/20	
1,1-Dichloroethene	ND	0.50	ug/L							07/17/20	
1,2,4-Trichlorobenzene	ND	0.50	ug/L							07/17/20	
1,2-Dichlorobenzene	ND	0.50	ug/L							07/17/20	
1,2-Dichloroethane	ND	0.50	ug/L							07/17/20	
1,2-Dichloropropane	ND	0.50	ug/L							07/17/20	
1,4-Dichlorobenzene	ND	0.50	ug/L							07/17/20	
Benzene	ND	0.50	ug/L							07/17/20	
Carbon Tetrachloride	ND	0.50	ug/L							07/17/20	
Chlorobenzene	ND	0.50	ug/L							07/17/20	
cis-1,2-Dichloroethene	ND	0.50	ug/L							07/17/20	
cis-1,3-Dichloropropene	ND	0.50	ug/L							07/17/20	
Dichloromethane	ND	0.50	ug/L							07/17/20	
Ethylbenzene	ND	0.50	ug/L							07/17/20	
m,p-Xylenes	ND	0.50	ug/L							07/17/20	
Methyl-t-butyl ether	ND	0.50	ug/L							07/17/20	
o-Xylene	ND	0.50	ug/L							07/17/20	
Styrene	ND	0.50	ug/L							07/17/20	
Tetrachloroethene (PCE)	ND	0.50	ug/L							07/17/20	
Toluene	ND	0.50	ug/L							07/17/20	
trans-1,2-Dichloroethene	ND	0.50	ug/L							07/17/20	
trans-1,3-Dichloropropene	ND	0.50	ug/L							07/17/20	
Trichloroethene (TCE)	ND	0.50	ug/L							07/17/20	
Trichlorofluoromethane	ND	5.0	ug/L							07/17/20	
Vinyl Chloride	ND	0.50	ug/L							07/17/20	
Surrogate: 1,2-Dichlorobenzene-d4	*52*			*50*		*104*	*70-130*			07/17/20	
Surrogate: Bromofluorobenzene	*56*			*50*		*112*	*70-130*			07/17/20	
Blank Spike (ADG0936-BS1)											
1,1,1-Trichloroethane	11	0.50	ug/L	10	ND	110	70-130			07/17/20	
1,1,2,2-Tetrachloroethane	11	0.50	ug/L	10	ND	107	70-130			07/17/20	
1,1,2-Trichloro-1,2,2-trifluoroethane	12	10	ug/L	10	ND	122	70-130			07/17/20	
1,1,2-Trichloroethane	11	0.50	ug/L	10	ND	105	70-130			07/17/20	
1,1-Dichloroethane	11	0.50	ug/L	10	ND	111	70-130			07/17/20	
1,1-Dichloroethene	12	0.50	ug/L	10	ND	116	70-130			07/17/20	
1,2,4-Trichlorobenzene	10	0.50	ug/L	10	ND	102	70-130			07/17/20	
1,2-Dichlorobenzene	11	0.50	ug/L	10	ND	105	70-130			07/17/20	
1,2-Dichloroethane	10	0.50	ug/L	10	ND	102	70-130			07/17/20	
1,2-Dichloropropane	11	0.50	ug/L	10	ND	108	70-130			07/17/20	

The results in this report apply to the samples analyzed in accordance with the chain of custody document. This analytical report must be reproduced in its entirety.

BSK Associates Laboratory Fresno

Organics Quality Control Report

Analyte	Result	RL	Units	Spike Level	Source Result	%REC	%REC Limits	RPD	RPD Limit	Date Analyzed	Qual
EPA 524.2 - Quality Control											
Batch: ADG0936										Prepared: 7/17/2020	
Prep Method: EPA 524.2										Analyst: ANM	
Blank Spike (ADG0936-BS1)											
1,4-Dichlorobenzene	10	0.50	ug/L	10	ND	104	70-130			07/17/20	
Benzene	11	0.50	ug/L	10	ND	109	70-130			07/17/20	
Carbon Tetrachloride	11	0.50	ug/L	10	ND	112	70-130			07/17/20	
Chlorobenzene	11	0.50	ug/L	10	ND	107	70-130			07/17/20	
cis-1,2-Dichloroethene	11	0.50	ug/L	10	ND	108	70-130			07/17/20	
cis-1,3-Dichloropropene	11	0.50	ug/L	10	ND	108	70-130			07/17/20	
Dichloromethane	10	0.50	ug/L	10	ND	104	70-130			07/17/20	
Ethylbenzene	11	0.50	ug/L	10	ND	109	70-130			07/17/20	
m,p-Xylenes	22	0.50	ug/L	20	ND	109	70-130			07/17/20	
Methyl-t-butyl ether	22	0.50	ug/L	20	ND	109	70-130			07/17/20	
o-Xylene	11	0.50	ug/L	10	ND	109	70-130			07/17/20	
Styrene	11	0.50	ug/L	10	ND	107	70-130			07/17/20	
Tetrachloroethene (PCE)	11	0.50	ug/L	10	ND	110	70-130			07/17/20	
Toluene	11	0.50	ug/L	10	ND	109	70-130			07/17/20	
trans-1,2-Dichloroethene	11	0.50	ug/L	10	ND	112	70-130			07/17/20	
trans-1,3-Dichloropropene	11	0.50	ug/L	10	ND	113	70-130			07/17/20	
Trichloroethene (TCE)	11	0.50	ug/L	10	ND	108	70-130			07/17/20	
Trichlorofluoromethane	12	5.0	ug/L	10	ND	116	70-130			07/17/20	
Vinyl Chloride	12	0.50	ug/L	10	ND	117	70-130			07/17/20	
Surrogate: 1,2-Dichlorobenzene-d4	*51*			*50*		*102*	*70-130*			07/17/20	
Surrogate: Bromofluorobenzene	*52*			*50*		*103*	*70-130*			07/17/20	
Blank Spike Dup (ADG0936-BSD1)											
1,1,1-Trichloroethane	10	0.50	ug/L	10	ND	103	70-130	6	30	07/17/20	
1,1,2,2-Tetrachloroethane	10	0.50	ug/L	10	ND	100	70-130	6	30	07/17/20	
1,1,2-Trichloro-1,2,2-trifluoroethane	11	10	ug/L	10	ND	113	70-130	8	30	07/17/20	
1,1,2-Trichloroethane	9.7	0.50	ug/L	10	ND	97	70-130	8	30	07/17/20	
1,1-Dichloroethane	10	0.50	ug/L	10	ND	102	70-130	8	30	07/17/20	
1,1-Dichloroethene	11	0.50	ug/L	10	ND	107	70-130	8	30	07/17/20	
1,2,4-Trichlorobenzene	9.4	0.50	ug/L	10	ND	94	70-130	8	30	07/17/20	
1,2-Dichlorobenzene	9.8	0.50	ug/L	10	ND	98	70-130	7	30	07/17/20	
1,2-Dichloroethane	9.6	0.50	ug/L	10	ND	96	70-130	7	30	07/17/20	
1,2-Dichloropropane	10	0.50	ug/L	10	ND	101	70-130	7	30	07/17/20	
1,4-Dichlorobenzene	9.8	0.50	ug/L	10	ND	98	70-130	7	30	07/17/20	
Benzene	10	0.50	ug/L	10	ND	101	70-130	8	30	07/17/20	
Carbon Tetrachloride	10	0.50	ug/L	10	ND	105	70-130	7	30	07/17/20	
Chlorobenzene	10	0.50	ug/L	10	ND	100	70-130	7	30	07/17/20	
cis-1,2-Dichloroethene	10	0.50	ug/L	10	ND	101	70-130	7	30	07/17/20	
cis-1,3-Dichloropropene	10	0.50	ug/L	10	ND	100	70-130	7	30	07/17/20	
Dichloromethane	10	0.50	ug/L	10	ND	100	70-130	4	30	07/17/20	
Ethylbenzene	10	0.50	ug/L	10	ND	101	70-130	7	30	07/17/20	
m,p-Xylenes	20	0.50	ug/L	20	ND	101	70-130	7	30	07/17/20	
Methyl-t-butyl ether	20	0.50	ug/L	20	ND	101	70-130	7	30	07/17/20	

The results in this report apply to the samples analyzed in accordance with the chain of custody document. This analytical report must be reproduced in its entirety.

BSK Associates Laboratory Fresno

Organics Quality Control Report

Analyte	Result	RL	Units	Spike Level	Source Result	%REC	%REC Limits	RPD	RPD Limit	Date Analyzed	Qual
EPA 524.2 - Quality Control											
Batch: ADG0936										Prepared: 7/17/2020	
Prep Method: EPA 524.2										Analyst: ANM	
Blank Spike Dup (ADG0936-BSD1)											
o-Xylene	10	0.50	ug/L	10	ND	101	70-130	8	30	07/17/20	
Styrene	9.9	0.50	ug/L	10	ND	99	70-130	8	30	07/17/20	
Tetrachloroethene (PCE)	10	0.50	ug/L	10	ND	102	70-130	7	30	07/17/20	
Toluene	10	0.50	ug/L	10	ND	101	70-130	8	30	07/17/20	
trans-1,2-Dichloroethene	10	0.50	ug/L	10	ND	104	70-130	8	30	07/17/20	
trans-1,3-Dichloropropene	11	0.50	ug/L	10	ND	105	70-130	7	30	07/17/20	
Trichloroethene (TCE)	10	0.50	ug/L	10	ND	100	70-130	8	30	07/17/20	
Trichlorofluoromethane	11	5.0	ug/L	10	ND	110	70-130	5	30	07/17/20	
Vinyl Chloride	11	0.50	ug/L	10	ND	107	70-130	9	30	07/17/20	
Surrogate: 1,2-Dichlorobenzene-d4	*50*			*50*		*99*	*70-130*			07/17/20	
Surrogate: Bromofluorobenzene	*50*			*50*		*101*	*70-130*			07/17/20	
Matrix Spike (ADG0936-MS1), Source: ADG1853-01											
1,1,1-Trichloroethane	12	0.50	ug/L	10	ND	124	48-160			07/18/20	
1,1,2,2-Tetrachloroethane	11	0.50	ug/L	10	ND	113	42-151			07/18/20	
1,1,2-Trichloro-1,2,2-trifluoroethane	14	10	ug/L	10	ND	137	47-164			07/18/20	
1,1,2-Trichloroethane	11	0.50	ug/L	10	ND	111	45-152			07/18/20	
1,1-Dichloroethane	13	0.50	ug/L	10	ND	126	48-157			07/18/20	
1,1-Dichloroethene	14	0.50	ug/L	10	ND	136	51-158			07/18/20	
1,2,4-Trichlorobenzene	10	0.50	ug/L	10	ND	105	33-149			07/18/20	
1,2-Dichlorobenzene	12	0.50	ug/L	10	ND	116	44-146			07/18/20	
1,2-Dichloroethane	11	0.50	ug/L	10	ND	114	47-151			07/18/20	
1,2-Dichloropropane	12	0.50	ug/L	10	ND	117	47-155			07/18/20	
1,4-Dichlorobenzene	12	0.50	ug/L	10	ND	115	43-146			07/18/20	
Benzene	12	0.50	ug/L	10	ND	119	48-155			07/18/20	
Carbon Tetrachloride	13	0.50	ug/L	10	ND	125	47-163			07/18/20	
Chlorobenzene	12	0.50	ug/L	10	ND	119	46-152			07/18/20	
cis-1,2-Dichloroethene	12	0.50	ug/L	10	ND	121	50-152			07/18/20	
cis-1,3-Dichloropropene	11	0.50	ug/L	10	ND	108	34-156			07/18/20	
Dichloromethane	12	0.50	ug/L	10	ND	121	47-156			07/18/20	
Ethylbenzene	12	0.50	ug/L	10	ND	123	40-157			07/18/20	
m,p-Xylenes	24	0.50	ug/L	20	ND	122	49-154			07/18/20	
Methyl-t-butyl ether	22	0.50	ug/L	20	ND	110	41-156			07/18/20	
o-Xylene	12	0.50	ug/L	10	ND	122	27-164			07/18/20	
Styrene	12	0.50	ug/L	10	ND	118	10-200			07/18/20	
Tetrachloroethene (PCE)	12	0.50	ug/L	10	ND	119	48-155			07/18/20	
Toluene	12	0.50	ug/L	10	ND	121	40-159			07/18/20	
trans-1,2-Dichloroethene	13	0.50	ug/L	10	ND	128	52-157			07/18/20	
trans-1,3-Dichloropropene	11	0.50	ug/L	10	ND	110	28-160			07/18/20	
Trichloroethene (TCE)	11	0.50	ug/L	10	ND	114	49-155			07/18/20	
Trichlorofluoromethane	14	5.0	ug/L	10	ND	140	47-169			07/18/20	
Vinyl Chloride	13	0.50	ug/L	10	ND	134	21-183			07/18/20	
Surrogate: 1,2-Dichlorobenzene-d4	*54*			*50*		*109*	*70-130*			07/18/20	

The results in this report apply to the samples analyzed in accordance with the chain of custody document. This analytical report must be reproduced in its entirety.

BSK Associates Laboratory Fresno

Organics Quality Control Report

Analyte	Result	RL	Units	Spike Level	Source Result	%REC	%REC Limits	RPD	RPD Limit	Date Analyzed	Qual
EPA 524.2 - Quality Control											
Batch: ADG0936										Prepared: 7/17/2020	
Prep Method: EPA 524.2										Analyst: ANM	
Matrix Spike (ADG0936-MS1), Source: ADG1853-01											
Surrogate: Bromofluorobenzene	*55*			*50*		*110*	*70-130*			07/18/20	
EPA 525.3 - Quality Control											
Batch: ADG0753										Prepared: 7/15/2020	
Prep Method: EPA 525.3										Analyst: JKH	
Blank (ADG0753-BLK1)											
Thiobencarb	ND	1.0	ug/L							07/16/20	
Surrogate: 1,3-Dimethyl-2-nitrobenzene	*1.0*			*1.0*		*101*	*70-130*			07/16/20	
Surrogate: Benzo(a)pyrene-d12	*0.94*			*1.0*		*94*	*70-130*			07/16/20	
Surrogate: Triphenyl Phosphate	*1.0*			*1.0*		*104*	*70-130*			07/16/20	
Blank Spike (ADG0753-BS1)											
Thiobencarb	0.36	1.0	ug/L	0.40	ND	90	70-130			07/16/20	
Surrogate: 1,3-Dimethyl-2-nitrobenzene	*0.86*			*1.0*		*86*	*70-130*			07/16/20	
Surrogate: Benzo(a)pyrene-d12	*0.90*			*1.0*		*90*	*70-130*			07/16/20	
Surrogate: Triphenyl Phosphate	*1.0*			*1.0*		*101*	*70-130*			07/16/20	
Blank Spike Dup (ADG0753-BSD1)											
Thiobencarb	0.39	1.0	ug/L	0.40	ND	98	70-130	9	30	07/16/20	
Surrogate: 1,3-Dimethyl-2-nitrobenzene	*0.98*			*1.0*		*98*	*70-130*			07/16/20	
Surrogate: Benzo(a)pyrene-d12	*0.95*			*1.0*		*95*	*70-130*			07/16/20	
Surrogate: Triphenyl Phosphate	*1.1*			*1.0*		*108*	*70-130*			07/16/20	
Matrix Spike (ADG0753-MS1), Source: ADG1385-01											
Thiobencarb	0.19	1.0	ug/L	0.20	ND	95	70-130			07/16/20	
Surrogate: 1,3-Dimethyl-2-nitrobenzene	*0.97*			*0.98*		*99*	*70-130*			07/16/20	
Surrogate: Benzo(a)pyrene-d12	*0.94*			*0.98*		*96*	*70-130*			07/16/20	
Surrogate: Triphenyl Phosphate	*1.1*			*0.98*		*112*	*70-130*			07/16/20	
SRL 524M-TCP - Quality Control											
Batch: ADG0478										Prepared: 7/9/2020	
Prep Method: no prep-volatiles										Analyst: JNG	
Blank (ADG0478-BLK1)											
1,2,3-Trichloropropane	ND	0.0050	ug/L							07/10/20	
Blank Spike (ADG0478-BS1)											
1,2,3-Trichloropropane	0.0052	0.0050	ug/L	0.0050	ND	103	80-120			07/10/20	
Blank Spike Dup (ADG0478-BSD1)											
1,2,3-Trichloropropane	0.0049	0.0050	ug/L	0.0050	ND	98	80-120	5	30	07/10/20	
Duplicate (ADG0478-DUP1), Source: ADG0700-05											
1,2,3-Trichloropropane	ND	0.0050	ug/L		ND				20	07/10/20	

The results in this report apply to the samples analyzed in accordance with the chain of custody document. This analytical report must be reproduced in its entirety.

BSK Associates Sacramento

General Chemistry Quality Control Report

Analyte	Result	RL	Units	Spike Level	Source Result	%REC	%REC Limits	RPD	RPD Limit	Date Analyzed	Qual
EPA 300.0 - Quality Control											
Batch: SDG0023										Prepared: 7/8/2020	
Prep Method: Method Specific Preparation										Analyst: KEF	
Blank (SDG0023-BLK1)											
Fluoride	ND	0.10	mg/L							07/08/20	
Nitrite as N	ND	0.050	mg/L							07/08/20	
Nitrate + Nitrite as N	ND	0.23	mg/L							07/08/20	
Nitrate as N	ND	0.23	mg/L							07/08/20	
Blank Spike (SDG0023-BS1)											
Fluoride	0.46	0.10	mg/L	0.50	ND	93	90-110			07/08/20	
Nitrite as N	0.49	0.050	mg/L	0.50	ND	98	90-110			07/08/20	
Nitrate as N	11	0.23	mg/L	11	ND	95	90-110			07/08/20	
Blank Spike Dup (SDG0023-BSD1)											
Fluoride	0.47	0.10	mg/L	0.50	ND	95	90-110	2	10	07/08/20	
Nitrite as N	0.50	0.050	mg/L	0.50	ND	99	90-110	1	20	07/08/20	
Nitrate as N	11	0.23	mg/L	11	ND	95	90-110	0	20	07/08/20	
Matrix Spike (SDG0023-MS1), Source: SDG0101-01											
Fluoride	0.69	0.10	mg/L	0.50	0.21	97	80-120			07/08/20	
Nitrite as N	0.46	0.050	mg/L	0.50	ND	93	50-110			07/08/20	
Nitrate as N	12	0.23	mg/L	11	0.68	98	80-120			07/08/20	
Matrix Spike (SDG0023-MS2), Source: SDG0091-01											
Fluoride	0.56	0.10	mg/L	0.50	ND	97	80-120			07/08/20	
Nitrite as N	0.43	0.050	mg/L	0.50	ND	86	50-110			07/08/20	
Nitrate as N	12	0.23	mg/L	11	0.78	98	80-120			07/08/20	
Matrix Spike Dup (SDG0023-MSD1), Source: SDG0101-01											
Fluoride	0.69	0.10	mg/L	0.50	0.21	98	80-120	0	10	07/08/20	
Nitrite as N	0.48	0.050	mg/L	0.50	ND	96	50-110	4	20	07/08/20	
Nitrate as N	12	0.23	mg/L	11	0.68	98	80-120	0	20	07/08/20	
Matrix Spike Dup (SDG0023-MSD2), Source: SDG0091-01											
Fluoride	0.56	0.10	mg/L	0.50	ND	97	80-120	0	10	07/08/20	
Nitrite as N	0.44	0.050	mg/L	0.50	ND	88	50-110	2	20	07/08/20	
Nitrate as N	12	0.23	mg/L	11	0.78	99	80-120	1	20	07/08/20	
EPA 300.0 - Quality Control											
Batch: SDG0031										Prepared: 7/9/2020	
Prep Method: Method Specific Preparation										Analyst: KEF	
Blank (SDG0031-BLK1)											
Sulfate as SO4	ND	0.50	mg/L							07/09/20	
Blank Spike (SDG0031-BS1)											
Sulfate as SO4	48	0.50	mg/L	50	ND	97	90-110			07/09/20	

The results in this report apply to the samples analyzed in accordance with the chain of custody document. This analytical report must be reproduced in its entirety.

BSK Associates Sacramento

General Chemistry Quality Control Report

Analyte	Result	RL	Units	Spike Level	Source Result	%REC	%REC Limits	RPD	RPD Limit	Date Analyzed	Qual
EPA 300.0 - Quality Control											
Batch: SDG0031										Prepared: 7/9/2020	
Prep Method: Method Specific Preparation										Analyst: KEF	
Blank Spike Dup (SDG0031-BSD1)											
Sulfate as SO4	49	0.50	mg/L	50	ND	98	90-110	1	20	07/09/20	
Matrix Spike (SDG0031-MS1), Source: SDG0158-01											
Sulfate as SO4	53	0.50	mg/L	50	3.4	98	80-120			07/09/20	
Matrix Spike (SDG0031-MS2), Source: SDG0165-01											
Sulfate as SO4	55	0.50	mg/L	50	5.5	100	80-120			07/09/20	
Matrix Spike Dup (SDG0031-MSD1), Source: SDG0158-01											
Sulfate as SO4	53	0.50	mg/L	50	3.4	100	80-120	1	20	07/09/20	
Matrix Spike Dup (SDG0031-MSD2), Source: SDG0165-01											
Sulfate as SO4	56	0.50	mg/L	50	5.5	100	80-120	0	20	07/09/20	
SM 2120B - Quality Control											
Batch: SDG0026										Prepared: 7/8/2020	
Prep Method: Method Specific Preparation										Analyst: KEF	
Blank (SDG0026-BLK1)											
Color, Apparent	ND	5.0	CU							07/08/20	
Duplicate (SDG0026-DUP1), Source: SDG0130-05											
Color, Apparent	ND	5.0	CU		ND				20	07/08/20	
SM 2130B - Quality Control											
Batch: SDG0026										Prepared: 7/8/2020	
Prep Method: Method Specific Preparation										Analyst: KEF	
Blank (SDG0026-BLK1)											
Turbidity	ND	0.10	NTU							07/08/20	
Duplicate (SDG0026-DUP1), Source: SDG0130-05											
Turbidity	ND	0.10	NTU		ND				20	07/08/20	
SM 2150B - Quality Control											
Batch: SDG0037										Prepared: 7/8/2020	
Prep Method: Method Specific Preparation										Analyst: KEF	
Blank (SDG0037-BLK1)											
Threshold Odor	ND	1.0	T.O.N.							07/08/20	
Blank (SDG0037-BLK2)											
Threshold Odor	ND	1.0	T.O.N.							07/08/20	

The results in this report apply to the samples analyzed in accordance with the chain of custody document. This analytical report must be reproduced in its entirety.

BSK Associates Sacramento

General Chemistry Quality Control Report

Analyte	Result	RL	Units	Spike Level	Source Result	%REC	%REC Limits	RPD	RPD Limit	Date Analyzed	Qual
SM 4500-H+ B - Quality Control											
Batch: SDG0025										Prepared: 7/8/2020	
Prep Method: Method Specific Preparation										Analyst: KEF	
Duplicate (SDG0025-DUP1), Source: SDG0130-05											
pH (1)	7.6		pH Units		7.5			1	20	07/08/20	
pH Temperature in °C	23.0		pH Units		22.5			2		07/08/20	
SM 4500-H+ B - Quality Control											
Batch: SDG0026										Prepared: 7/8/2020	
Prep Method: Method Specific Preparation										Analyst: KEF	
Duplicate (SDG0026-DUP1), Source: SDG0130-05											
Color pH (1)	7.60		pH Units		7.54			1		07/08/20	

The results in this report apply to the samples analyzed in accordance with the chain of custody document. This analytical report must be reproduced in its entirety.

BSK Associates Sacramento

Metals Quality Control Report

Analyte	Result	RL	Units	Spike Level	Source Result	%REC	%REC Limits	RPD	RPD Limit	Date Analyzed	Qual	
EPA 200.7 - Quality Control												
Batch: ADG0678										Prepared: 7/14/2020		
Prep Method: EPA 200.2										Analyst: mds		
Blank (ADG0678-BLK2)												
Sodium	ND	1.0	mg/L							07/16/20		
Blank Spike (ADG0678-BS2)												
Sodium	4.2	1.0	mg/L	4.0	ND	106	85-115			07/16/20		
Blank Spike Dup (ADG0678-BSD2)												
Sodium	4.1	1.0	mg/L	4.0	ND	103	85-115	2	20	07/16/20		
Matrix Spike (ADG0678-MS3), Source: RDG0050-02												
Sodium	140	1.0	mg/L	4.0	130	365	70-130			07/16/20		***High***
Matrix Spike (ADG0678-MS4), Source: SDG0157-01												
Sodium	210	1.0	mg/L	4.0	210	168	70-130			07/16/20	MS1.0	***High***
Matrix Spike Dup (ADG0678-MSD3), Source: RDG0050-02												
Sodium	140	1.0	mg/L	4.0	130	428	70-130	2	20	07/16/20	MS1.0	***High***
Matrix Spike Dup (ADG0678-MSD4), Source: SDG0157-01												
Sodium	210	1.0	mg/L	4.0	210	164	70-130	0	20	07/16/20	MS1.0	***High***

The results in this report apply to the samples analyzed in accordance with the chain of custody document. This analytical report must be reproduced in its entirety.

Certificate of Analysis

Notes:

- The Chain of Custody document and Sample Integrity Sheet are part of the analytical report.
- Any remaining sample(s) for testing will be disposed of according to BSK's sample retention policy unless other arrangements are made in advance.
- All positive results for EPA Methods 504.1 and 524.2 require the analysis of a Field Reagent Blank (FRB) to confirm that the results are not a contamination error from field sampling steps. If Field Reagent Blanks were not submitted with the samples, this method requirement has not been performed.
- Samples collected by BSK Analytical Laboratories were collected in accordance with the BSK Sampling and Collection Standard Operating Procedures.
- J-value is equivalent to DNQ (Detected, not quantified) which is a trace value. A trace value is an analyte detected between the MDL and the laboratory reporting limit. This result is of an unknown data quality and is only qualitative (estimated). Baseline noise, calibration curve extrapolation below the lowest calibrator, method blank detections, and integration artifacts can all produce apparent DNQ values, which contribute to the un-reliability of these values.
- (1) - Residual chlorine and pH analysis have a 15 minute holding time for both drinking and waste water samples as defined by the EPA and 40 CFR 136. Waste water and ground water (monitoring well) samples must be field filtered to meet the 15 minute holding time for dissolved metals.
- Field tests are outside the scope of laboratory accreditation and there is no certification available for field testing.
- Summations of analytes (i.e. Total Trihalomethanes) may appear to add individual amounts incorrectly, due to rounding of analyte values occurring before or after the total value is calculated, as well as rounding of the total value.
- RL Multiplier is the factor used to adjust the reporting limit (RL) due to variations in sample preparation procedures and dilutions required for matrix interferences.
- Due to the subjective nature of the Threshold Odor Method , all characterizations of the detected odor are the opinion of the panel of analysts. The characterizations can be found in Standard Methods 2170B Figure 2170:1.
- The MCLs provided in this report (if applicable) represent the primary MCLs for that analyte.
- (2) - Formerly known as Bis(2-Chloroisopropyl) ether.

Definitions

mg/L:	Milligrams/Liter (ppm)	MDL:	Method Detection Limit	MDA95:	Min. Detected Activity
mg/Kg:	Milligrams/Kilogram (ppm)	RL:	Reporting Limit: DL x Dilution	MPN:	Most Probable Number
µg/L:	Micrograms/Liter (ppb)	ND:	None Detected below MRL/MDL	CFU:	Colony Forming Unit
µg/Kg:	Micrograms/Kilogram (ppb)	pCi/L:	PicoCuries per Liter	Absent:	Less than 1 CFU/100mLs
%:	Percent	RL Mult:	RL Multiplier	Present:	1 or more CFU/100mLs
NR:	Non-Reportable	MCL:	Maximum Contaminant Limit	U:	The analyte was not detected at or above the reported sample quantitation limit.

Please see the individual Subcontract Lab's report for applicable certifications.

Aggressive Index	Langelier Index	E. Coli
Total Coliform	Color, Apparent	Fluoride
Nitrate + Nitrite as N	Nitrate as N	Nitrite as N
pH (1)	pH Temperature in °C	Sulfate as SO4
Turbidity	1,2,3-Trichloropropane	

The results in this report apply to the samples analyzed in accordance with the chain of custody document. This analytical report must be reproduced in its entirety.

Certificate of Analysis

Certifications: **Please refer to our website for a copy of our Accredited Fields of Testing under each certification.**

Fresno

State of California - ELAP	1180	State of Hawaii	4021
Los Angeles CSD	9254479	NELAP certified	4021-014
State of Nevada	CA000792020-2	State of Oregon - NELAP	4021-014
EPA - UCMR4	CA00079	State of Washington	C997-20b

Sacramento

State of California - ELAP	2435

San Bernardino

State of California - ELAP	2993	Los Angeles CSD	9254478
NELAP certified	4119-004	State of Oregon - NELAP	4119-004

Vancouver

NELAP certified	WA100008-012	State of Oregon - NELAP	WA100008-013
State of Washington	C824-19		

BSK ASSOCIATES

1414 Stanislaus St., Fresno, CA 93706
(559) 497-2888 · Fax (559) 497-2893
www.bskassociates.com

Turnaround Time Request
☐ Standard - 10 business days
☐ Rush (Surcharge may apply)
Date needed:

SDG0157Schaa4848 07/08/2020

10

*Required Fields

Temp: 21.0

Company/Client Name*:	Report Attention*:	Invoice To*:	Phone*:	Fax:
Schaff and Wheeler	Bret Crews Additional cc's:	Brett Crews PO#:	720-545-6306 E-mail*: bcrews@swsv.com	

Address*:	City*:	State*:	Zip*:
1171 Homestead Rd., Ste 255	Santa Clara	CA	95050

Project: Water Quality Testing

Project #:

How would you like to receive your completed results?*
☒ E-Mail ☐ Fax ☐ Mail

Reporting Options:
☐ Trace (J-Flag) ☐ Swamp ☐ EDD Type: _____

Regulatory Carbon Copies
☐ SWRCB (Drinking Water)
☐ Merced Co ☐ Fresno Co
☐ Madera Co ☐ Tulare Co
☐ Other: _____

Regulatory Compliance
☒ EDT to California SWRCB (Drinking Water)
System Number*: 3902181
☐ Geotracker #: _____

Sampler Name (Printed/Signature)*:
x Brett Crews BRETT CREWS

Matrix Types: SW=Surface Water BW=Bottled Water GW=Ground Water WW=Waste Water STW=Storm Water DW=Drinking Water SO=Solid

#	Sample Description*	Sampled* Date	Sampled* Time	Matrix*	Comments / Station Code / WTRAX	S-Title 22 GM/IO/GP w/out cyanide	Hex Chrome 218.7	Perchlorate Package	TCP by GC/MS	EPA 504.1 (EDB/DBCP)	EPA 524.2 Regulated Compounds	EPA 525.3 Thiobencarb Only	EXT -Gross Alpha	
1	14800 W Schulte, Well 3	7/8/2020	13:55		3902181-003	X	X	X	X	X	X	X	X	
2	TCP TB-0520041								X					
3	504 TB-0626031									X				
4	524 TB-0626037										X			
5														

Relinquished by: (Signature and Printed Name)	Company	Date	Time	Received by: (Signature and Printed Name)	Company
x Brett Crews BRETT CREWS		7/8/2020	1549	[illegible] Brenda Hamilton	BSK
Relinquished by: (Signature and Printed Name)	Company	Date	Time	Received by: (Signature and Printed Name)	Company
Received for Lab by: (Signature and Printed Name)		Date	Time	Payment Received at Delivery: Check / Cash Date: Amount: PIA#: Init.	

Shipping Method: ONTRAC UPS GSO WALK-IN FED EX Courier: _____ Custody Seal: Y / N

Cooling Method: Wet Blue None Chilling Process Begun: Y / N

Payment for services rendered as noted herein are due in full within 30 days from the date invoiced. If not so paid, account balances are deemed delinquent. Delinquent balances are subject to monthly service charges and interest specified in BSK's current Standard Terms and Conditions for Laboratory Services. The person signing for Client/Company acknowledges that they are either the Client or an authorized agent to the Client, that the Client agrees to be responsible for payment for the services on this Chain of Custody, and agrees to BSK's terms and conditions for laboratory services unless contractually bound otherwise. BSK's current terms and conditions can be found at www.bskassociates.com/BSKLabTermsConditions.pdf

SR-FL-0012-07

SDG0157Schaa4848 07/08/2020

10

Sample Integrity

BSK Bottles: Yes No Page 1 of 1

COC Info

Is temperature within range? Chemistry ≤ 6°C Micro < 8°C	Yes No NA	Are correct containers and preservatives received for the tests requested?	Yes No NA
If samples were taken today, is there evidence that chilling has begun?	Yes No NA	Bubbles Present in VOA (524.2/TCP/TTHM)? TB Received? (Check Method Below)	Yes No NA Yes No NA
Did all bottles arrive unbroken and intact?	Yes No	Is sufficient amount of sample received?	Yes No
Do all bottle labels agree with COC?	Yes No	Do samples have a hold time <72 hours?	Yes No
Was sodium thiosulfate added to CN sample(s) until chlorine was no longer present?	Yes No NA	Has PM been notified of discrepancies? PM: By/Time:	Yes No NA

Bottles Received

"—" means preservation/chlorine checks are either N/A or are performed in the lab

250ml(A) 500ml(B) 1Liter(C) 40mlVOA(V) 125ml(D)	Checks	Passed?	1	2	3	4	
Bacti $Na_2S_2O_3$	—	—	1D				
None (P) White Cap	—	—	3C, 2A				
Cr6 (P) Lt. Green Label/Blue Cap $NH_4OH(NH_4)_2SO_4$ **DW**	Cl, pH > 8	P F	1A				
Cr6 (P) Pink Label/Blue Cap $NH_4OH(NH_4)_2SO_4$ **WW**	pH 9.3-9.7	P F					
Cr6 (P) Black Label/Blue Cap $NH_4OH(NH_4)_2SO_4$ **7199** ***24 HOUR HOLD TIME***	pH 9.0-9.5	P F					
HNO_3 (P) Red Cap or HCl (P) Purple Cap/Lt. Blue Label	—	—	1B, 2C				
H_2SO_4 (P) or (AG) Yellow Cap/Label	pH < 2	P F					
NaOH (P) Green Cap	Cl, pH >10	P F					
NaOH + ZnAc (P)	pH > 9	P F					
Dissolved Oxygen 300ml (g)	—	—					
None (AG) 608/8081/8082, 625, 632/8321, 8151, 8270	—	—	1C				
HCl (AG) Lt. Blue Label O&G, Diesel, **TCP**	—	—	3V	2V			
Ascorbic, EDTA, KH_2Ct (AG) Pink Label 525	—	—	2C				
Na_2SO_3 250mL (AG) Neon Green Label 515	—	—					
$Na_2S_2O_3$ 1 Liter (Brown P) 549	—	—					
$Na_2S_2O_3$ (AG) Blue Label 548, THM, 524	—	—					
$Na_2S_2O_3$ (CG) Blue Label 504, 505, 547	—	—	3V		2V		
$Na_2S_2O_3$ + MCAA (CG) Orange Label 531	pH < 3	P F					
NH_4Cl (AG) Purple Label 552	—	—					
EDA (AG) Brown Label DBPs	—	—					
HCL (CG) 524.2,BTEX,Gas, MTBE, 8260/624	—	—	3V			2V	
Buffer pH 4 (CG)	—	—					
H_3PO_4 (CG) Salmon Label	—	—					
Trizma – EPA 537.1							
Other:							
Asbestos 1L (P) w/ Foil / LL Metals Bottle	—	—					
Bottled Water	—	—					
Clear Glass 125mL / 250mL / 500mL / 1 Liter	—	—					
Solids: Brass / Steel / Plastic Bag	—	—					

Split

	Container	Preservative	Date/Time/Initials		Container	Preservative	Date/Time/Initials
S P				S P			
S P				S P			

Comments

✓ **Indicates Blanks Received**

504 __ 524.2 __ TCP __ TTHM __ 537 __

8260/624 __

Scanned: _____

SAMPLE TRANSIT ORDER

SDG0157

Jaime Lee LaFave

Receipt temp @ FAL: 1.9, 1.0, 1.3 Thermometer/ IR Gun ID: ~~351~~

SENDING LABORATORY:

BSK Associates Sacramento
3140 Gold Camp Drive #160
Rancho Cordova, CA 95670
916.853.9293 (Main)
916.853.9297 (FAX)

Project Manager: Jaime Lee LaFave
E-mail: jlafave@bskassociates.com

RECEIVING LABORATORY:

BSK Associates Laboratory Fresno
1414 Stanislaus St
Fresno, CA 93706
559-497-2888 (Main)
559-485-6935 (FAX)

Turnaround (Days): Standard
QC Deliverables: I Std III IV

Client: Schaaf and Wheeler

Sample ID	Samp Desc		Sample Date
SDG0157-01	**(14800 W Schulte, Well 3**	**Client Matrix** Water	**07/08/2020 13:55**

Lab Matrix: Water

Analysis:

Aggressive Index
Alkalinity as CaCO3
Aluminum, CA DW ICP
Antimony, CA DW ICPMS
Arsenic, CA DW ICPMS
Barium, CA DW ICP
Beryllium, CA DW ICPMS
Cadmium, CA DW ICPMS
Calcium, CA DW ICP
Chloride
Chromium, CA DW ICPMS
Copper, CA DW ICPMS
EC, Conductivity
EPA 504.1 - (EDB/DBCP)
EPA 524.2 - Regulated Compounds - Subtest
EPA 525.3 - Thiobencarb only
Hex Chrom, DW by EPA 218.7
Iron, CA DW ICP
Langelier Index
Lead, CA DW ICPMS
Magnesium, CA DW ICP
Manganese, CA DW ICP
MBAS
Mercury, CA DW ICPMS
Nickel, CA DW ICPMS
Perchlorate
Potassium, CA DW ICP
Selenium, CA DW ICPMS
Silver, CA DW ICPMS
TCP by Purge & Trap GC/MS
TDS, Total Dissolved Solids
Thallium, CA DW ICPMS
Total 1,3-Dichloropropene
Total Xylenes, EPA 524.2
Zinc, CA DW ICP

Sample ID	Samp Desc		Sample Date
SDG0157-02	**TCP TB- 0520041**	**Client Matrix** Water	**07/08/2020 00:00**

Lab Matrix: Water

Analysis:

TCP by Purge & Trap GC/MS

SDG0157-03	**504 TB- 0620031**	**Client Matrix** Water	**07/07/2020 00:00**

Lab Matrix: Water

Analysis:

EPA 504.1 - (EDB/DBCP)

SDG0157-04	**524 TB- 0620037**	**Client Matrix** Water	**07/07/2020 00:00**

Lab Matrix: Water

Analysis:

EPA 524.2 - Regulated Compounds - Subtest
Total 1,3-Dichloropropene
Total Xylenes, EPA 524.2

Containers Included

SDG0157-01	A	1L P / None
SDG0157-01	B	1L P / None
SDG0157-01	C	1L P / None
SDG0157-01	E	250mL P / None
SDG0157-01	F	250mL P / NH4OH(NH4)2SO4
SDG0157-01	G	500mL P / HNO3
SDG0157-01	J	40mL VOA / HCL
SDG0157-01	K	40mL VOA / HCL
SDG0157-01	L	40mL VOA / HCL
SDG0157-01	M	1L AG / Ascorbic,EDTA,KH2Ct
SDG0157-01	N	1L AG / Ascorbic,EDTA,KH2Ct
SDG0157-01	O	40mL VOA / Na2S203
SDG0157-01	P	40mL VOA / Na2S203
SDG0157-01	Q	40mL VOA / Na2S203
SDG0157-01	R	40mL AG VOA / HCL
SDG0157-01	S	40mL AG VOA / HCL
SDG0157-01	T	40mL AG VOA / HCL
SDG0157-02	A	40mL AG VOA / HCL
SDG0157-02	B	40mL AG VOA / HCL
SDG0157-03	A	40mL VOA / Na2S203
SDG0157-03	B	40mL VOA / Na2S203
SDG0157-04	A	40mL VOA / HCL
SDG0157-04	B	40mL VOA / HCL

Kyle Land 7/9/2020 — Released By / Date
7.9.2020 1235 — Received By / Date
7.9.2020 1545 — Released By / Date
Tony Weber 7-9-2020 16:11 — Received By / Date
BSK w BN

SAMPLE TRANSIT INTEGRITY

PM: Jaime Lee LaFave

SDG0157
07/08/2020
Schaa4848
10

BSK Bottles: (Yes) No Page (1) of (1)

COC Info

Was temperature within range? Chemistry ≤ 6ºC Micro< 8ºC	(Yes) No NA	Were correct containers and preservatives received for the tests requested?	(Yes) No NA
Did all bottles arrive unbroken and intact?	(Yes) No	Bubbles Present VOAs (524.2/TCP/TTHM)?	Yes (No) NA
Was a sufficient amount of sample received?	(Yes) No	TB Received? (Check Method Below)	(Yes) No NA
Do samples have a hold time <72 hours?	(Yes) No	Was PM notified of discrepancies? PM: By/Time:	Yes No (NA)
Was sodium thiosulfate added to CN sample(s) until chlorine was no longer present?	Yes No (NA)		

Bottles Received

"---" means preservation/chlorine checks are either N/A or are performed in the lab

250ml(A) 500ml(B) 1Liter(C) 40ml VOA(V)	Checks	Passed?	1	2	3	4		
Bacti $Na_2S_2O_3$	---	---						
None (P) White Cap	---	---	3C 1A					
Cr6 (P) Lt. Green Label/Blue Cap $NH_4OH(NH_4)SO_4$ **DW**	Cl, pH> 8	(P) F	1A					
Cr6 (P) Pink Label/Blue Cap $NH_4OH(NH_4)SO_4$ **WW**	pH 9.3 - 9.7	P F						
Cr6 (P) Black Label/Blue Cap $NH_4OH(NH_4)SO_4$ **7199** ***24 HOUR HOLD TIME***	pH 9.0 - 9.5	P F						
HNO_3 (P) Red Cap or HCl (P) Purple Cap/Lt. Blue Label	---	---	1B					
H_2SO_4 (P) or (AG) Yellow Cap/Label	pH < 2	P F						
NaOH (P) Green Cap	Cl, pH> 10	P F						
NaOH + ZnAc (P)	pH > 9	P F						
Dissolved Oxygen 300ml (g)	---	---						
None (AG) 608/8081/8082, 625, 632/8321, 8151, 8270	---	---						
HCl (AG) Lt. Blue Label O&G, Diesel, **TCP**	---	---	3V	2V				
Ascorbic, EDTA, KH_2Ct (AG) Pink Label 525	---	---	2C					
Na_2SO_3 250ml (AG) Neon Green Label 515	---	---						
$Na_2S_2O_3$ 1 Liter (Brown P) 549	---	---						
$Na_2S_2O_3$ (AG) Blue Label 548, THM, 524	---	---						
$Na_2S_2O_3$ (CG) Blue Label 504, 505, 547	---	---	3V		2V			
$Na_2S_2O_3$ + MCAA (CG) Orange Label 531	pH < 3	P F						
NH_4Cl (AG) Purple Label 552	---	---						
EDA (AG) Brown Label DBPs	---	---						
HCL (CG) 524.2, BTEX, Gas, MTBE, 8260/624	---	---	3V			2V		
Buffer pH 4 (CG)	---	---						
H_3PO_4 (CG) Salmon Label	---	---						
250mL P / Trizma 531.1	---	---						
Other:								
Asbestos 1L (P) w/Foil / LL Metals Bottle	---	---						
Bottled Water	---	---						
Clear Glass 250ml / 500ml / 1 Liter	---	---						
Solids: Brass / Steel / Plastic Bag	---	---						

HNO 7/9/2020

Split

	Container	Preservative	Date/Time/Initials		Container	Preservative	Date/Time/Initials
S P				S P			
S P				S P			

Comments

✓ Indicates Blanks Received

504 ✓ 524.2 ✓ TCP ✓

TTHM ____ 537 ____ 8260/624 ____

Labels Checked by: MO @ 1537 Scanned by: ____ @ ____

RUSH Paged by: ____ @ ____

July 24, 2020

BSK Associates Engineers & Laboratories
1414 Stanislaus St.
Fresno, CA 93706

Lab ID : SP 2009104
Customer : 2-22939

Laboratory Report

Introduction: This report package contains total of 3 pages divided into 3 sections:

Case Narrative	(1 pages)	: An overview of the work performed at FGL.
Sample Results	(1 page)	: Results for each sample submitted.
Quality Control	(1 page)	: Supporting Quality Control (QC) results.

Case Narrative

This Case Narrative pertains to the following samples:

Sample Description	Date Sampled	Date Received	FGL Lab ID #	Matrix
14800 W. Schulte, Well 3	07/08/2020	07/10/2020	SP 2009104-001	W

Sampling and Receipt Information: All samples were received in acceptable condition and within temperature requirements, unless noted on the Condition Upon Receipt (CUR) form. All samples arrived at room temperature. All samples were prepared and analyzed within the method specified hold time. All samples were checked for pH if acid or base preservation is required (except for VOAs). For details of sample receipt information, please see the attached Chain of Custody and Condition Upon Receipt Form.

Quality Control: All samples were prepared and analyzed according to the following tables:

Radio QC

900.0	07/23/2020:211602 All analysis quality controls are within established criteria
	07/15/2020:208106 All preparation quality controls are within established criteria (performed at FGL-SP ELAP# 1573)

Certification:: I certify that this data package is in compliance with ELAP standards, both technically and for completeness, except for any conditions listed above. Release of the data contained in this data package is authorized by the Laboratory Director or his designee, as verified by the following electronic signature.

KD:DMB

Reviewed and Approved By **Kelly A. Dunnahoo, B.S.** Digitally signed by Kelly A. Dunnahoo, B.S. Title: Laboratory Director Date: 2020-07-24

Corporate Offices & Laboratory
853 Corporation Street
Santa Paula, CA 93060
TEL: (805)392-2000
Env FAX: (805)525-4172 / Ag FAX: (805)392-2063
CA ELAP Certification No. 1573

Office & Laboratory
2500 Stagecoach Road
Stockton, CA 95215
TEL: (209)942-0182
FAX: (209)942-0423
CA ELAP Certification No. 1563

Office & Laboratory
563 E. Lindo Avenue
Chico, CA 95926
TEL: (530)343-5818
FAX: (530)343-3807
CA ELAP Certification No. 2670

Office & Laboratory
3442 Empresa Drive, Suite D
San Luis Obispo, CA 93401
TEL: (805)783-2940
FAX: (805)783-2912
CA ELAP Certification No. 2775

Office & Laboratory
9415 W. Goshen Avenue
Visalia, CA 93291
TEL: (559)734-9473
FAX:
CA ELAP Certification No. 2810

July 24, 2020

BSK Associates Engineers & Laboratories
1414 Stanislaus St.
Fresno, CA 93706

Lab ID : SP 2009104-001
Customer ID : 2-22939

Sampled On : July 8, 2020-13:55
Sampled By : Brett Crew
Received On : July 10, 2020-11:00
Matrix : Water

Description : 14800 W. Schulte, Well 3
Project : SDG0157

Sample Result - Radio

Constituent	Result ± Error	MDA	Units	MCL/AL	Sample Preparation Method	Sample Preparation Date/ID	Sample Analysis Method	Sample Analysis Date/ID
Radio Chemistry								
Gross Alpha	3.35 ± 1.23	1.50	pCi/L	15/5	900.0	07/15/20-09:06 2P2008106	900.0	07/23/20-16:09 2A2011602

ND=Non-Detected. PQL=Practical Quantitation Limit. * PQL adjusted for dilution.

MDA = Minimum Detectable Activity (Calculated at the 95% confidence level) = Data utilized by DHS to determine matrix interference.
MCL / AL = Maximum Contamination Level / Action Level. Alpha's Action Level of 5 pCi/L is based on the Assigned Value (AV).
AV = Assigned Value(Gross Alpha Result + (0.84 x Error)). CCR Section 64442: Drinking Water Compliance Note: Do the following
If Gross Alpha's (AV) exceeds 5 pCi/L run Uranium. If Gross Alpha's (AV) minus Uranium exceeds 5 pCi/L run Radium 226.

Drinking Water Compliance:
Gross Alpha (AV) minus Uranium is less than or equal to 15 pCi/L
Uranium is less than or equal to 20 pCi/L
Radium 226 + Radium 228 is less than or equal to 5 pCi/L

Note: Samples are held for 3-6 months prior to disposal.

Corporate Offices & Laboratory
853 Corporation Street
Santa Paula, CA 93060
TEL: (805)392-2000
Env FAX: (805)525-4172 / Ag FAX: (805)392-2063
CA ELAP Certification No. 1573

Office & Laboratory
2500 Stagecoach Road
Stockton, CA 95215
TEL: (209)942-0182
FAX: (209)942-0423
CA ELAP Certification No. 1563

Office & Laboratory
563 E. Lindo Avenue
Chico, CA 95926
TEL: (530)343-5818
FAX: (530)343-3807
CA ELAP Certification No. 2670

Office & Laboratory
3442 Empresa Drive, Suite D
San Luis Obispo, CA 93401
TEL: (805)783-2940
FAX: (805)783-2912
CA ELAP Certification No. 2775

Office & Laboratory
9415 W. Goshen Avenue
Visalia, CA 93291
TEL: (559)734-9473
FAX
CA ELAP Certification No. 2810

July 24, 2020 Lab ID : SP 2009104
BSK Associates Engineers & Laboratories Customer : 2-22939

Quality Control - Radio

Constituent	Method	Date/ID	Type	Units	Conc.	QC Data	DQO	Note
Radio								
Alpha	900.0	07/23/20:211602JCA	CCV	cpm	7956	39.9 %	35-47	
			CCB	cpm		0.1200	0.14	
Gross Alpha	900.0	07/15/20:208106iwc	Blank	pCi/L		0.34	3	
			LCS	pCi/L	155.2	108 %	75-125	
			MS	pCi/L	155.2	130 %	60-140	
		(CH 2075279-001)	MSD	pCi/L	155.2	126 %	60-140	
			MSRPD	pCi/L	155.2	2.5%	≤30	

Definition

CCV	: Continuing Calibration Verification - Analyzed to verify the instrument calibration is within criteria.
CCB	: Continuing Calibration Blank - Analyzed to verify the instrument baseline is within criteria.
Blank	: Method Blank - Prepared to verify that the preparation process is not contributing contamination to the samples.
LCS	: Laboratory Control Standard/Sample - Prepared to verify that the preparation process is not affecting analyte recovery.
MS	: Matrix Spikes - A random sample is spiked with a known amount of analyte. The recoveries are an indication of how that sample matrix affects analyte recovery.
MSD	: Matrix Spike Duplicate of MS/MSD pair - A random sample duplicate is spiked with a known amount of analyte. The recoveries are an indication of how that sample matrix affects analyte recovery.
MSRPD	: MS/MSD Relative Percent Difference (RPD) - The MS relative percent difference is an indication of precision for the preparation and analysis.
DQO	: Data Quality Objective - This is the criteria against which the quality control data is compared.

Corporate Offices & Laboratory
853 Corporation Street
Santa Paula, CA 93060
TEL: (805)392-2000
Env FAX: (805)525-4172 / Ag FAX: (805)392-2063
CA ELAP Certification No. 1573

Office & Laboratory
2500 Stagecoach Road
Stockton, CA 95215
TEL: (209)942-0182
FAX: (209)942-0423
CA ELAP Certification No. 1563

Office & Laboratory
563 E. Lindo Avenue
Chico, CA 95926
TEL: (530)343-5818
FAX: (530)343-3807
CA ELAP Certification No. 2670

Office & Laboratory
3442 Empresa Drive, Suite D
San Luis Obispo, CA 93401
TEL: (805)783-2940
FAX: (805)783-2912
CA ELAP Certification No. 2775

Office & Laboratory
9415 W. Goshen Avenue
Visalia, CA 93291
TEL: (559)734-9473
FAX: (559)734-8435
CA ELAP Certification No. 2810

BSK ASSOCIATES

SUBCONTRACT ORDER

SDG0157

2009104

SENDING LABORATORY:

BSK Associates Sacramento
3140 Gold Camp Drive #160
Rancho Cordova, CA 95670
Phone: 916-853-9293
Fax: 916.853.9297
Project Manager: Jaime Lee LaFave
E-mail: jlafave@bskassociates.com

RUSH

RECEIVING LABORATORY:

FGL Environmental
P.O. Box 272 / 853 Corporation
Santa Paula, CA 93060
Phone :(805) 392-2000
Fax: (805) 525-4172
Turnaround (Days): Standard
QC Deliverables: I Std III IV

Sample ID	Samp Desc	Comments	Sample Date
SDG0157-01	**(14800 W Schulte, Well 3**	**Client Matrix** Water	**07/08/2020 13:55**

Lab Matrix: Water **System Number:** 3902181-003

Analysis: 7 RASW/HNO3
EXT-Gross Alpha

Shipped by BSK- Sac/ 7/9/2020

State Forms: **Yes**

System Name: _____ Employer: Schaaf and Wheeler

User ID: _____ Sampler: Brett Crew

RUSH

Kyle Land 7/9/2020
Released By Date

Received By Date

Released By Date

Received By Date 7/10/20 1100

549 of 707

Condition Upon Receipt (Attach to COC)

Sample Receipt at SP:

1. Number of ice chests/packages received: **1**
2. Shipper tracking numbers **549647070**
3. Were samples received in a chilled condition?
   Temps: **RRT** / _____ / _____ / _____ / _____ / _____ / _____
4. Surface water (SWTR) bact samples: A sample that has a temperature upon receipt of >10C, whether iced or not, should be flagged unless the time since sample collection has been less than two hours.
5. Do the number of bottles received agree with the COC? **Yes** No N/A
6. Verify sample date, time, sampler **Yes** No N/A
7. Were the samples received intact? (i.e. no broken bottles, leaks, etc.) **Yes** No
8. Were sample custody seals intact? Yes No **N/A**

Sample Verification, Labeling and Distribution:

1. Were all requested analyses understood and acceptable? **Yes** No
2. Did bottle labels correspond with the client's ID's? **Yes** No
3. Were all bottles requiring sample preservation properly preserved? Yes No **N/A** **FGL**
   [Exception: Oil & Grease, VOA and CrVI verified in lab]
4. VOAs checked for Headspace? Yes No **N/A**
5. Were all analyses within holding times at time of receipt? **Yes** No
6. Have rush or project due dates been checked and accepted? **Yes** No N/A

Include a copy of the COC for lab delivery. (Bacti. Inorganics and Radio)

Sample Receipt, Login and Verification completed by:

Reviewed and Approved By **Shawn Peck** Digitally signed by Shawn Peck
Title: Sample Receiving
Date: 07/13/2020-11:07:23

Discrepancy Documentation:

Any items above which are "No" or do not meet specifications (i.e. temps) must be resolved.

1. Person Contacted: _____ Phone Number: _____
   Initiated By: _____ Date: _____
   Problem:

   Resolution:

2. Person Contacted: _____ Phone Number: _____
   Initiated By: _____ Date: _____
   Problem:

   Resolution:

(2022939)
BSK Associates
SP 2009104
SRP-07/13/2020-11:07:23

APPENDIX H
Tracy Summary of Groundwater Conditions

GEI Consultants

Geotechnical
Environmental and
Water Resources
Engineering

Summary of Groundwater Conditions

October 2011 through September 2013

Prepared for:
City of Tracy

Date: November 25, 2014
Project No: 1328920

GEI Consultants

Geotechnical
Environmental and
Water Resources
Engineering

November 25, 2014

Mr. Steve Bayley
Assistant Director of Public Works
City of Tracy
520 Tracy Boulevard
Tracy, CA 95377

Re: Summary of Groundwater Conditions
October 2011 through September 2013

Dear Mr. Bayley:

GEI Consultants, Inc. (GEI) is pleased to submit this Summary of Groundwater Conditions Report for the City of Tracy. This report describes the evolution of monitoring, development of groundwater management, a brief discussion of the aquifers, and the purpose for monitoring the groundwater. The report also includes a description of the monitoring network, presents monitoring data, interprets the data for both the confined and unconfined aquifers and contains recommendations for future monitoring efforts.

If you have any questions pertaining to this report, please call Richard Shatz at 916-631-4566.

Sincerely,

GEI CONSULTANTS, INC.

Justin Crose, P.G. 9034
Project Geologist

Richard W. Shatz, C.E.G. 1514
Principal Hydrogeologist

Enclosure

j:\tracy, city of\project\1328920_ groundwater conditions status 2013\deliverables\l-transmittal.doc

GEI Consultants, Inc.
2868 Prospect Park Drive Suite 400, Rancho Cordova, California 95670
916.631.4500 fax: 916.631.4501

Table of Contents

1 Introduction 1
1.1 Location 1
1.2 Background 1

2 Monitoring Network 3
2.1 Unconfined Aquifer Monitoring Network 3
2.2 Confined Aquifer Monitoring Network 3
2.2.1 Production Wells 3
2.2.2 Monitoring Wells 4

3 Groundwater Monitoring 5
3.1 Unconfined Aquifer Groundwater Level Measurements 5
3.2 Confined Aquifer Groundwater Level Measurements 5
3.3 Groundwater Contouring 5
3.4 Production Data 6
3.5 Unconfined Aquifer Water Quality Sampling 6
3.6 Confined Aquifer Water Quality Sampling 6

4 Findings 8
4.1 Groundwater Production 8
4.2 Groundwater Injection 8
4.3 Unconfined Aquifer Groundwater Levels 9
4.4 Confined Aquifer Groundwater Levels 9
4.4.1 Production Wells 9
4.4.2 Clustered Monitoring Wells 10
4.5 Comparison of Unconfined to Confined Aquifer 11
4.6 Groundwater Contours 11
4.6.1 Unconfined Aquifer 11
4.6.2 Confined Aquifer 11
4.7 Water Quality 12

5 Conclusions 15

6 Recommendations 17

7 References 18

Figures
Figure 1 – Regional Map

Figure 2 – Production Well and Monitoring Well Location Map
Figure 3 – Unconfined Aquifer Well MW-8 (Alden Park) Graph
Figure 4 – Unconfined Aquifer Well MW-10 (Alden Park) Graph
Figure 5 – Unconfined Aquifer Well MW-11 (Alden Park) Graph
Figure 6 – Unconfined Aquifer Well MW-14 (Alden Park) Graph
Figure 7 – Unconfined Aquifer Well MW-1 (Grant Line) Graph
Figure 8 – Unconfined Aquifer Well MW-3 (Grant Line) Graph
Figure 9 – Unconfined Aquifer Well MW-4 (Tracy Kerlinger) Graph
Figure 10 – Unconfined Aquifer Well MW-5 (Tracy/Kerlinger) Graph
Figure 11 – Lincoln Well Graph
Figure 12 – Production Well 1 Graph
Figure 13 – Production Well 2 Graph
Figure 14 – Production Well 3 Graph
Figure 15 – Production Well 4 Graph
Figure 16 – Production Well 5 Graph
Figure 17 – Production Well 6 Graph
Figure 18 – Production Well 7 Graph
Figure 19 – Production Well 8 Graph
Figure 20 – Clustered Monitoring Well MW-1A Graph
Figure 21 – Clustered Monitoring Well MW-1B Graph
Figure 22 – Clustered Monitoring Well MW-1C Graph
Figure 23 – Clustered Monitoring Well MW-2A Graph
Figure 24 – Clustered Monitoring Well MW-2B Graph
Figure 25 – Clustered Monitoring Well MW-2C Graph
Figure 26 – Clustered Monitoring Well MW-3A Graph
Figure 27 – Clustered Monitoring Well MW-3B Graph
Figure 28 – Clustered Monitoring Well MW-3C Graph
Figure 29 – Clustered Monitoring Well MW-4A Graph
Figure 30 – Clustered Monitoring Well MW-4B Graph
Figure 31 – Clustered Monitoring Well MW-4C Graph
Figure 32 – Clustered Monitoring Well MW-5A Graph
Figure 33 – Clustered Monitoring Well MW-5B Graph
Figure 34 – Clustered Monitoring Well MW-5C Graph
Figure 35 – Clustered Monitoring Well MW-6A Graph
Figure 36 – Clustered Monitoring Well MW-6B Graph
Figure 37 – Clustered Monitoring Well MW-6C Graph
Figure 38 – Unconfined Aquifer Groundwater Contours 2013
Figure 39 – Confined Aquifers Groundwater Contours, 2013 (Zones A, B, and C)
Figure 40 – Confined Aquifer TDS Contour Map 2013
Figure 41 – Confined Aquifer Chloride Contour Map 2013
Figure 42 – Confined Aquifer Sulfate Contour Map 2013
Figure 43 – Confined Aquifer Nitrate as Nitrogen Contour Map 2013

Tables

Table 1 – Summary of Unconfined Aquifer Monitoring Wells Construction Details
Table 2 – Summary of Production Wells Construction Details

Table 3 – Summary of Confined Aquifer Monitoring Wells Construction Details
Table 4 – Summary of Reference Point Elevations
Table 5 – Groundwater Monitoring Frequency (from GMP)

Appendices

Appendix A - Groundwater Level Measurements
Appendix B - Production/Recharge Data
Appendix C - Water Quality

J:\Tracy, City of\Project\1328920_ Groundwater conditions Status 2013\DELIVERABLES\R-Groundwater Cond_2013_final.doc

1 Introduction

The City of Tracy (City or Tracy) recognizes the importance and value of groundwater and is taking a lead role to protect this resource. In 2006, the City led the development of the Tracy Regional Groundwater Management Plan (GMP) for the Tracy Groundwater Subbasin. Other major groundwater users in the subbasin (stakeholders) also participated and as a group are committed to managing groundwater in the subbasin. The GMP recommended that stakeholders monitor the groundwater conditions in each of their respective areas and share the results to cooperatively manage the resource. This report summarizes groundwater levels and groundwater quality beneath the City for the period of October 2011 through September 2013. Our interpretations are based on available data and may be revised as additional information is collected.

1.1 Location

The City of Tracy is located near the west-central portion of the Central Valley providence, a large topographic trough located in the center of California (USGS 1971). The Central Valley is bounded on the east by the Sierra Nevada and on the west by the Coast Ranges. Underlying the Central Valley are extensive groundwater aquifers used by agriculture and rural and urban residents, including those in Tracy. This large aquifer is subdivided into basins and subbasins. The City is located near the center of the Tracy groundwater subbasin and is one of the largest groundwater users. Figure 1 shows the general location of the City.

The City is located in San Joaquin County about 15 miles southwest of Stockton, California. It is surrounded by open farmland to the east, the Coast Ranges to the south and west, and the Bay-Delta to the north. The southern portion of the City is adjacent to the Delta-Mendota Canal and the State Water Project canals. The City's airport, water treatment plant, and four of its production wells are also adjacent to the canals. Major roadways providing access to Tracy include Highway 205 from the north, Interstate 5 from the east, and Highway 580 from the south and west. Figure 1 shows these roadways.

1.2 Background

The City adopted a General Plan in 2011. The plan directs growth in Tracy to ensure that growth is well planned and managed for the benefit of the current and projected future population.

Currently, the City obtains water from both surface water and groundwater sources. As a public water purveyor, it exercises its appropriative and overlying rights to use groundwater for beneficial use by the public. The City obtains surface water from the

Delta-Mendota Canal and the Stanislaus River and groundwater from nine City-owned groundwater supply wells.

The City requires that all new major developments secure sufficient surface water supplies. Current surface water supplies appear adequate to meet Tracy's needs in the long term. However, groundwater provides the City with an emergency water supply source in the event of the failure or contamination of its surface water supply sources and during peak water demand months. The wells are also used when the surface water treatment is shut down for maintenance.

The City increased groundwater extraction from about 5,800 acre-feet per year to 8,000 acre-feet per year over a three-year period, from 2001 to 2004. Additional groundwater extraction continued through the completion of the South County Water Supply Project (SCWSP) in 2005 and currently continues, but at a much lesser extent. During the period of increased pumping the City monitored groundwater and ground surface elevations in order to comply with the California Environmental Quality Act. Eighteen monitoring wells were constructed and benchmarks were established to ensure there were no significant impacts. Over the three-year period no significant impacts were detected.

The City successfully completed the assignment of up to 10,000 acre-feet per year of water from neighboring irrigation districts during 2003. Additionally, the SCWSP became operational during July 2005. The City began to take delivery of a portion of the SCWSP water in August 2005. The addition of these surface water supplies enabled the City to reduce its use of groundwater and allow groundwater to be reserved for emergency use and for peak water demands during the summer months.

In 2007 the City adopted the Tracy Regional GMP, which includes continued groundwater monitoring. The monitoring provides a technical basis for identifying and implementing groundwater management actions to preserve the groundwater quality and quantity. The GMP reported the presence of two aquifers within the subbasin. An unconfined to confined aquifer is present from ground surface to a depth of about 300 feet below ground surface (bgs). The Corcoran clay separates the unconfined aquifer from the underlying confined aquifers, which extend from about 400 to 800 feet bgs.

In 2012, the City joined with the California Department of Water Resources (DWR) and became a monitoring entity to DWR to regionally acquire high quality groundwater levels as part of its California Statewide Groundwater Elevation Monitoring (CASGEM) program. As a monitoring entity the City remains eligible for grant funding of projects.

2 Monitoring Network

The monitoring network within the City's boundaries consists of wells monitored by the City and monitoring wells owned and monitored by other entities that submit their data to the California Regional Water Quality Control Board (RWQCB) as well as upload the information to an online data sharing program (GeoTracker). In general, the other entities monitor water levels and limited water quality in the unconfined aquifer whereas the City monitors groundwater in the confined aquifer. The following sections describe the current monitoring network.

2.1 Unconfined Aquifer Monitoring Network

Groundwater level measurements were gathered from GeoTracker for three separate locations (sites) where monitoring wells are screened within the unconfined aquifer. Their locations are shown on Figure 2. The sites are: Alden Park (Chevron), Grant Line (Chevron), and Tracy/Kerlinger Aggregate Plant. The monitoring is being performed due to releases of contaminants to the environment that may have affected the groundwater. The monitoring wells are on private property. Table 1 summarizes the well construction details for wells in the unconfined aquifer.

Static water levels are currently measured on a semi-annual and/or annual basis at these sites and reported to the RWQCB. The water quality monitored is typically just for the contaminants of concern and does not coincide with the general parameters monitored by the City and other GMP stakeholders in the confined aquifer, limiting water quality comparisons between the unconfined and confined aquifers.

2.2 Confined Aquifer Monitoring Network

2.2.1 Production Wells

The City currently has nine active groundwater production wells, including the Lincoln well and Production Wells 1, 2, 3, 4, 5 (Lewis Manor), 6 (Park and Ride), 7 (Ball Park), and 8. Production Well 8 is reserved for aquifer storage and recovery (ASR). In December 2010, the well was approved for ASR feasibility demonstration pilot testing. The testing was completed approximately two years later and Production Well 8 is currently being used for ASR. Figure 2 shows the locations of the production wells. Table 2 summarizes the well construction details for each of these wells.

2.2.2 Monitoring Wells

Monitoring wells differ from production wells in that they are designed with shorter screen intervals (40 feet or less) to measure properties within a specific aquifer. Data from monitoring wells are considered to be representative of individual aquifer conditions and are generally of higher quality than the data obtained from production wells.

The City has two different types of monitoring wells, nested and clustered. Each type of monitoring well has a different purpose. Currently only the clustered monitoring wells are being monitored.

Clustered monitoring wells were constructed in sets of three at six locations around Tracy. Their primary purpose is to monitor groundwater levels and water quality in aquifers below the Corcoran clay; the shallow, intermediate, and deep aquifers. These wells were constructed at least one-quarter mile from the nearest production or agricultural well so that their water levels would not be influenced by pumping. Table 3 summarizes the monitoring well construction details for the wells. Figure 2 shows the locations of these monitoring wells.

The nested monitoring wells (PW-5A through PW-5D) were installed near Production Well 5. They can be used to assess conditions induced by pumping Production Well 5, including water quality, vertical gradients, and drawdown of each aquifer (shallow, intermediate, deep, and deeper aquifers that are located beneath the Corcoran clay). The well depths and screened intervals for these wells are shown in Table 3. These monitoring wells are not included in the monitoring network.

Two monitoring wells were installed with Production Well 8 (PW-8). These monitoring wells have long screen intervals similar to the production well and cross several different aquifers, all below the Corcoran clay. Both are within 100 feet of the production well and measure an aggregate of water levels similar to the production well.

3 Groundwater Monitoring

The City implemented the monitoring program to fulfill its commitments and to continue to manage groundwater beneath the City. The following sections describe monitoring activities for this reporting period.

3.1 Unconfined Aquifer Groundwater Level Measurements

The sites previously used in the Summary of Groundwater Conditions report (GEI; 1/23/2009), to gather groundwater data from the unconfined aquifer beneath the City, all went into closure. Three new sites (Grant Line (Chevron), Alden Park (Chevron), and Tracy/Kerlinger Aggregate Plant) where groundwater data is collected from the unconfined aquifer beneath the City were listed on GeoTracker and used to assess groundwater levels.

The Alden Park, Grant Line, and Tracy/Kerlinger sites all have several monitoring wells. The groundwater elevation variance at each site is minimal and therefore data was only collected from a few wells at each site. Table 1 lists the wells used.

Appendix A contains groundwater level measurements. Figures 3 through 10 display the changes in these measurements over time.

3.2 Confined Aquifer Groundwater Level Measurements

Groundwater level measurements were obtained by the City from nine production wells (the Lincoln Park well and Production Wells 1 through 8) and 18 monitoring wells (MW-1A/B/C through MW-6A/B/C). Water level measurements were not obtained from production wells that could not be turned off for a minimum of 24 hours. Measurements taken with an ultrasonic water level were recorded to the nearest foot; those taken with an electric sounder were recorded to the nearest 0.01 foot.

Water level measurements were subtracted from the surface elevations to obtain the groundwater elevation. Table 4 lists the elevations for each well. Figures 11 through 37 show the groundwater level trends. Appendix A contains the groundwater level measurements from 2001 to present.

3.3 Groundwater Contouring

Groundwater level measurements in the unconfined aquifer, collected from various entities, were not consistently taken during the same months. Therefore, a groundwater contour map of the unconfined aquifer was generated using measurements collected during the months of February (Tracy/Kerlinger), April (Alden Park), and May (Grant Line) 2013.

Figure 38 shows the approximate groundwater contours and flow directions in the Spring of 2013 for the unconfined aquifer.

Groundwater measurements from the production wells and clustered monitoring wells were used to create regional groundwater contour maps for the confined aquifer. A direct comparison of water level data from the production wells and the monitoring wells results in some uncertainties because the monitoring wells are constructed into specific confined aquifers (i.e., shallow, intermediate, and deep, termed Zones A, B, and C, respectively), while the production wells have long screen intervals that collect water from all three of the confined aquifer Zones. However, using the production wells water levels does show the potential local effects of pumping. Figure 39 shows the groundwater contours in September 2013 for all three Zones monitored.

3.4 Production Data

In this reporting period, groundwater production data from the City's confined aquifer production wells were collected monthly. The production totals were recorded on a totalizing flow meter at each well. Figures 11 through 37 show the results in comparison to groundwater levels and water quality to the amount of groundwater pumped. Appendix B contains the groundwater production data from 2001 to present.

3.5 Unconfined Aquifer Water Quality Sampling

Water quality samples were collected and analyzed by each entity for specific contaminants of concern, typically volatile organic compounds (VOCs), which have local importance to the subbasin. However, the general health of the subbasin is assessed through the use of inorganic compounds such as total dissolved solids (TDS), nitrate, boron, and sulfate. The other entities do not monitor for these constituents, but some of them do measure the electrical conductivity (EC) in the field, which can be used to approximate the TDS; however, this data was not reported during this monitoring period.

3.6 Confined Aquifer Water Quality Sampling

During this monitoring period, City personnel have collected groundwater samples from the confined aquifer Production wells and clustered monitoring wells, with a few exceptions, and not always during the same months. One sample was collected at all of the clustered monitoring wells during this monitoring period. Two samples were collected at Production Wells 3, 4, 5 and 6, no samples were collected at the Lincoln well (pump removed for well cleaning), one sample was collected at Production Wells 1 and 2, and three samples were collected at Production Well 8. The extra sample collected at Production Well 8 was part of the ASR feasibility testing.

Water quality samples from the production wells were collected from the wells while they were pumping, whereas the water quality samples from each of the clustered monitoring

wells were collected using micropurge techniques. The clustered monitoring wells were purged at a rate of about 1 liter per hour until water levels, pH, and temperature stabilized and a representative sample from the aquifer could be obtained. The water from both the production wells and the clustered monitoring wells were collected directly from the pump discharge into laboratory-prepared sampling bottles.

The sample bottles were placed on ice and transported to Eurofins/Eaton Analytical in Monrovia, California. The samples were analyzed for major cations and anions, nitrate, boron, and selected metals. Appendix C contains a summary of the laboratory results. Figures 11 through 37 display the trends of the key water quality parameters.

4 Findings

The following sections discuss the results of the groundwater monitoring for the reporting period of October 2011 through September 2013. Historic data since monitoring began is also provided to establish background level trends.

4.1 Groundwater Production

The City's wells that were pumped during this monitoring period include the Lincoln Well and Production Wells 1 through 8. The Lincoln Well and Production Well 1 were taken out of production in March and February 2009, respectively. They returned to production in August and June 2013, respectively. Production Well 2 went out of service in January 2013. Production Well 8 was approved for ASR feasibility testing in December 2010 and the City was authorized to implement the ASR Program in November 2013 (Notice of Applicability; 11/13/2013). Figures 11 through 19 show the production totals by month for each well. Appendix B contains monthly production totals for each well. The figures and data show the following:

- Production increased in the 2012 water year (October 1, 2011 through September 30, 2012) (1,037 acre feet) compared to the 2011 water year (which reached a historic low of 222 acre feet) due to the ASR testing at Production Well 8. However, production was still low compared to groundwater extractions prior to the SCWSP becoming operational. Production Well 8 accounted for more than twice the production from all the other wells. Peak pumping occurred during the summer in 2012.

- Production in the 2013 water year (1,395 acre feet) is at a slightly increased level from 2012. The distribution of production from the wells is more balanced in 2013 rather than a majority coming from Production Well 8 as in 2012. Peak pumping occurred during the summer in 2013.

4.2 Groundwater Injection

Beginning in 2011 the City started injecting and pumping water at Production Well 8 (ASR well) as part of the ASR feasibility testing. Injection water was obtained from the City's drinking water distribution system and was fully treated to Title 22 drinking water standards prior to being injected. The source of the water was from the South San Joaquin Irrigation District and consisted of only Stanislaus River water which after treatment has better water quality than the groundwater (THMs being the exception). Injection periods occurred in January through April during 2011, 2012, and 2013 and pumping took place after the water was stored for variable periods.

A total of 1,048 acre feet of water has been injected into the confined aquifer (223 acre feet in 2011, 660 acre feet in 2012, and 165 acre feet in 2013). A total of 1,023 acre feet of water has been pumped from Production Well 8 in the same time period (38 acre feet in 2011, 843 acre feet in 2012, and 142 acre feet in 2013). Therefore, overall there is a positive balance of 25 acre feet of water at Production Well 8 during this monitoring period.

4.3 Unconfined Aquifer Groundwater Levels

Groundwater level measurements from Alden Park, Grant Line, and Tracy/Kerlinger monitoring wells vary slightly seasonally, but there does not appear to be any effect from the City's pumping in the underlying confined aquifer. The City does not pump water from the unconfined aquifer. Groundwater levels in the unconfined aquifer are significantly deeper at the south end of the City typically measuring more than 120 feet below ground surface (bgs) or about 60 feet above mean sea level (msl), whereas groundwater levels at the north end of the City were as shallow as about 7 feet bgs or about 20 feet above msl. Figures 3 through 10 present data showing groundwater level trends for each well.

4.4 Confined Aquifer Groundwater Levels

Groundwater level measurements during this monitoring period were collected at the Lincoln Well, Production Wells 1 through 8, and 18 clustered monitoring wells. Figures 11 through 37 present data showing groundwater level trends for each well.

4.4.1 Production Wells

The groundwater levels recorded at the production wells (including the Lincoln well) varied considerably during this monitoring period. In general, the production wells showed the following:

- Groundwater levels are on the rise at all Production Wells and reached historic highs at all Production Wells during this period with the exception of Production Well 4.
- Seasonal variations in groundwater levels are apparent, with the highs typically during the winter and spring months and the lows during the summer and fall months when increased pumping takes place.
- Groundwater levels in 2013 at Production Wells 1, 2, and 3 are significantly higher, 30 to 100 feet higher, than historic levels. This is likely a direct result of the reduction of pumping from the confined aquifer in this area. All three wells are located near the DMC and SWP canals.

- Only one static water level measurement was collected at Production Well 8 during this period (September 2013) and it was higher than the measurement collected in 2010, which is the only historic groundwater measurement taken at Production Well 8. Additional measurements were taken, but during times of injection or extraction.

4.4.2 Clustered Monitoring Wells

As previously stated, monitoring wells at each site have been completed into different confined aquifers (i.e., shallow, intermediate, and deep, as monitored by Zone A, Zone B, and Zone C wells, respectively) in part to assess the water quality and vertical gradient between the individual aquifers that comprise the confined aquifer between 400 and 800 feet bgs. During this monitoring period groundwater levels (piezometric heads) were collected quarterly. A few trends were seen in the groundwater levels. In general, the clustered monitoring wells showed the following:

- Groundwater levels have been rising since monitoring began and has continued to rise through 2013 in aquifer Zones A, B, and C. The groundwater levels display a seasonal cyclic pattern with lows during the summer and fall months when pumping from the City's Production wells and other wells in the region increase and highs during the spring and winter months.

- Groundwater levels reached historic high levels in every clustered monitoring well (A, B, and C wells) in spring 2012, with the exception of MW-5 (A, B, and C) and MW-6C. These four monitoring wells reached historic high groundwater levels in spring 2013. The rise in groundwater levels appears directly related to the City's decreased pumping.

- All monitoring wells, with a few exceptions, showed a downward vertical gradient of about 1 to 13 feet between Zone A and Zone B wells. The gradient appears to be decreasing with the drop in production from the City's wells.

- There is a consistent upward vertical gradient from MW-5B to MW-5A. It appears pumping outside of the City, to the east, is predominately from Zone A where good quality water is present. An upward vertical gradient was also seen during the spring months, when pumping from the City's wells is minimal, in 2012 at MW-3B to MW-3A. MW-6B and MW-6A also showed this trend in spring 2012 and spring 2013; however, it was much less pronounced.

- There is a 1 to 6-foot upward vertical gradient from MW-5C to MW-5B during most monitoring periods except for December 2011 and March 2013 when the gradient reversed and was slightly downward. MW-5C historically has high levels of chloride and TDS compared to all other wells monitored by the City. This upward gradient could potentially move poorer quality water from the deep

aquifer around MW-5C to the intermediate aquifer at MW-5B where better water quality is present.

4.5 Comparison of Unconfined to Confined Aquifer

Groundwater level differences can show the vertical direction of groundwater flow if the confining bed has imperfections or if wells are screened across both aquifers. When combined with water quality results, it can help to explain the occurrence of poorer quality water.

The unconfined aquifer has higher groundwater levels than the confined aquifer. In the southern portions of the City the difference between the water levels is anywhere from about 60 to 100 feet with a downward gradient from the unconfined to confined aquifer. In the northern portion there is a downward gradient of about 30 feet from the unconfined to confined aquifer. The effects of pumping within the confined aquifer are readily apparent, but are not reflected in the unconfined aquifer indicating that the Corcoran clay is an effective barrier to groundwater flow. However, no barrier is completely impermeable and slow leakance can occur towards the lower groundwater level (head), in this case water from the unconfined will move towards and into the confined aquifer.

4.6 Groundwater Contours

Groundwater contours show the horizontal direction of flow in aquifers. The groundwater flow direction can be different in each aquifer. Figure 38 shows the groundwater contours in the unconfined aquifer in Spring of 2013. Figure 39 shows groundwater contours in the confined aquifers for September 2013.

4.6.1 Unconfined Aquifer

The groundwater contours for the unconfined aquifer show a flow direction from the southeast towards the Old River north of the City. The contours suggest there is very little to no recharge from the Coast Ranges.

4.6.2 Confined Aquifer

Groundwater contours for the confined aquifer are broken down into three sections, one section for each aquifer zone within the overall confined aquifer (Zones A, B, and C). Figure 39 shows the groundwater contours for each of these zones. The contours are based on water level measurements from production wells perforated below the Corcoran clay and supplemented with measurements from either the shallow aquifer (Zone A), the intermediate aquifer (Zone B), or the deep aquifer (Zone C) clustered monitoring wells. The production wells typically have screen lengths of 100 feet or more and are often screened opposite multiple depths within the confined aquifer. Groundwater level data from the production wells represent an aggregate of several aquifers and may not be

representative of an individual aquifer's condition. Thus, an interpretation of groundwater level data from production wells must be used cautiously and should be used only to specify general rather than actual conditions of the aquifers at a particular well location.

The groundwater contours for Zone A do not include data from Production Wells 6 (Park and Ride) and 7 (Ball Park), which are not screened or obtain water from this shallow aquifer. The groundwater flow direction is radially towards the Lincoln Park well. The lowest groundwater elevation (not including Production Wells) is located around MW-5A on the east side of the City. The groundwater is about 11 feet lower at MW-5A than groundwater levels at MW-1 located on the west side of the City. There may be pumping east of the City that is contributing to this depression including pumping from lower zones. There is a second small depression in the groundwater contours of Zone A, which appears to be related to pumping. This pumping depression is located in the southern portion of the City around Production Wells 3 and 4. Groundwater is moving radially towards this small depression.

The groundwater contours for Zone B and Zone C are similar to one another. There appears to be two pumping depressions in both zones. One of the pumping depressions is located at the north end of the City, centered beneath Production Well 7. Groundwater flow is moving in a radial pattern towards this production well, coming from all directions. The pumping depression near the airport in the southern portion of the City, beneath Production Wells 3 and 4 also exhibits a radial flow pattern towards it. This pumping depression is less pronounced due to the recent high groundwater levels at Production Well 1, which are 30 to 100 feet higher than historic levels. The pumping depression has lowered the groundwater surface by about 20 feet around Production Well 7 and by about 45 feet around Production Wells 3 and 4.

The pumping depression centered over Production Wells 3 and 4, near the airport, is seen in all three Zones. This pumping depression has been present since monitoring began, but the size of the depression is poorly constrained (few or no monitoring wells south, west, or east of the well field), which limits the ability to assess if the confined aquifer is being recharged from these areas.

4.7 Water Quality

Currently there is no groundwater quality information from the unconfined aquifer for the key constituents monitored in the confined aquifer. It appears that during sampling, field measurements of electrical conductivity (EC) are being collected at some of the wells in the unconfined aquifer; however, this data has not been provided on the web site. Previous reports indicate that the water quality (TDS) in the unconfined aquifer is of poorer quality compared to the confined aquifers and would exceed recommended drinking water maximum contaminant levels (MCL).

Groundwater quality samples, representing the confined aquifer, were collected from the clustered monitoring wells MW-1 through MW-6 and from Production Wells 1 through 8. MW-1 through MW-6 were sampled in February 2013 during this monitoring period. The production wells were sampled anywhere from one to three times during this monitoring period. The water quality results from the production wells, which are screened across all the confined aquifer zones, represent a mixing of all these zones and therefore were not used in the contour maps for analytical results. Background water quality research indicates that boron, chloride, sulfate, nitrate, and TDS are key indicator parameters. Figures 11 through 37 show the concentration trends of these key parameters versus water level and production data. Figures 40 through 43 show the distribution of the concentrations in the aquifers for TDS, chloride, sulfate, and nitrate as nitrogen for February 2013.

The water quality results from the production wells show the key parameters have all remained within their historic limits except for nitrogen (as nitrogen) at Production Well 2. The concentration is about three times higher than historic levels, but still below the maximum contaminant level (mcl).

Significant changes in water quality occur between the clustered wells horizontally and vertically. Historically, clustered monitoring wells MW-2 and MW-5 have the highest levels of the key indicator parameters. These monitoring wells play a key role in assessing changing groundwater conditions in the area.

Laboratory analyses from the clustered monitoring wells collected in February 2013 show the following:

- TDS concentrations reached historic low levels at all wells, with the exceptions of MW-2B, MW-2C, MW-3B and MW4A. The highest concentrations of TDS were detected near MW-2 and MW-5 and appear to be coming from areas east and west of the City and not from the overlying unconfined aquifer. Higher groundwater levels in Zone C could be moving higher concentrations into the Zone B aquifer.

- The highest concentrations of chloride were at MW-5C, more than double of any other monitored well, consistent with historic results. Concentrations of chloride appear stable at all clustered monitoring wells, including MW-5C, suggesting that the poor quality water in the deep aquifer is not migrating or being drawn into the area by pumping.

- Concentrations of sulfate exhibited a general downward trend and were at historic lows in at all wells, with the exception of MW-2B, MW-2C, MW-3B, and MW-5B. MW-2 and MW-5 had the highest concentrations of sulfate.

- Nitrate as nitrogen concentrations were below the laboratory detection limit at all the wells, with a few exceptions, consistent with historic results. MW-2B, MW-

2C, and MW-5B had low detections of nitrate as nitrogen, also consistent with historic results.

- Nitrate was not present in Zone A, but was present in Zones B and C, indicating the nitrate may be moving horizontally into the aquifers from the east and west.
- Boron concentrations appear stable at all wells.

5 Conclusions

The groundwater conditions in the confined aquifer beneath the City appear to be affected by the City's pumping or rather lack thereof. Over the past few years the City has greatly reduced the amount of water pumped from its production wells in response to the SCWSP coming online. Groundwater levels and groundwater quality beneath the City were collected from the confined aquifers (Zones A, B, and C) by the City and the unconfined aquifer by other entities. The Corcoran clay acts as the aquitard (barrier) between the unconfined and confined aquifers and appears to be an effective barrier to vertical flow. The groundwater levels are higher in the unconfined aquifer and the water quality is poorer (based on previous reports) than in the confined aquifers. Therefore, with the vertical gradient towards the confined aquifer from the unconfined aquifer and with the unconfined aquifer having poorer water quality if a pathway existed between these two aquifers it would show up by producing a signature of poorer water quality in the confined aquifer near the pathway. There are other factors that can cause changes in water quality such as horizontal and vertical migration within the confined aquifers related to pumping.

Groundwater production decreased significantly since 2005, reaching all-time lows in 2010 and 2011. The SCSWSP, which began operation in late 2005, has been offsetting the need for additional groundwater pumping. Groundwater production increased again in 2012 and 2013; however, it is still less than 20 percent of what was pumped prior to the implementation of the SCSWSP. The increase in production in 2012 and 2013 also coincides with the ASR feasibility pilot testing at Production Well 8, which commenced in 2011. The increase in pumping, attributed to Production Well 8, only recovered water that had been injected since 2011 and left in the aquifer about 25 acre-feet of water.

Groundwater levels within the unconfined aquifer are only about 7 feet bgs in the northern portion of the City and could affect infrastructure and vegetation. Groundwater levels in the unconfined aquifer are higher than in the confined aquifer and could migrate into the confined aquifer through imperfections in the Corcoran clay or from wells screened in both aquifers. Currently there are no indications locally of water from the unconfined aquifer migrating to the confined aquifer.

The groundwater levels in the confined aquifer reflect a similar pattern to previous years, showing a cyclic pattern with the summer and fall months showing the lowest groundwater levels and the winter and spring months showing the highest groundwater levels. However, the variance (high and low) in the cycles has been smaller during the past few years since pumping by the City has decreased.

Groundwater levels from the three different confined aquifers beneath the City show varying gradients. Similar to previous measurements, most monitoring wells showed a downward vertical gradient between Zone A wells and Zone B wells; however, this gradient appears to be lessening as production from the City's wells decreases. MW-5 is the exception, typically displaying a slight upward gradient from Zone A to Zone B. This variance from the normal gradient is likely related to wells located east of the City that are screened in Zone A being pumped, thereby lowering the water levels in Zone A. The vertical gradient between the Zone B and Zone C wells varies, having both upward and downward gradients that appear to be partially controlled by pumping. There has been a consistent upward gradient from Zone C to Zone B at MW-5 and MW-6. At MW-5 the upward gradient could move poorer quality water from Zone C into Zone B production aquifers, even during periods when the City is not pumping. However, no evidence to date shows that this has occurred.

Pumping of the City's production wells continues to locally affect the groundwater flow direction in the confined aquifer. Groundwater contours for the confined aquifer were developed using measurements from the production wells and the clustered monitoring wells. The groundwater contours in the confined aquifer show a couple different patterns. Zones B and C have similar patterns, but are slightly different from the pattern seen in Zone A, indicating different recharge sources. The groundwater in Zone A is flowing from west to east and has potential to draw poorer quality water from the west towards the City's production wells. Pumping depressions beneath the City are still present, but are currently not as deep due to the City reducing pumping and because of ASR.

Concentrations of TDS and sulfate, two of the key indicator parameter constituents, in the clustered monitoring wells are at historic low levels and are exhibiting downward trends with a few exceptions. This is likely due to the reduced pumping by the City.

Locally higher concentrations of TDS, chloride, nitrate, and sulfate are present near MW-2 and MW-5. Groundwater flow directions show pumping by the City is moving this poorer quality water towards its wells. The condition has been present since at least 2001 and this effect changes year to year, but overall the extent of the migration of this poorer quality water appears to be relatively stable.

Trends in water quality in the clustered monitoring wells, in particular, MW-2B, MW-2C, MW-5B, MW-5C, and MW-6C, are important indicators in evaluating whether pumping by the City is adversely affecting water quality. Currently the concentrations are remaining stable.

Water quality in the production wells also appears to be remaining stable and within their historic ranges except at Production Well 2 where nitrate levels have tripled. Additional sampling is warranted to confirm whether this is anomalous or part of an upward trend.

6 Recommendations

The SCWSP is on line and the need for additional groundwater supplies appears to be diminishing. However, with predictions of drought conditions and the highly variable surface water supply, the City's groundwater supply ensures a reliable source of water. The City is also geographically located in an ideal position to implement conjunctive use. Therefore, continued groundwater monitoring is needed to protect the City's groundwater resources and plan groundwater management actions.

The following monitoring actions are recommended:

- Collect samples from Production Well 2 and analyze for nitrate. If the results show a continued upward trend, reduce pumping from the well.
- Continue with confined aquifer groundwater monitoring activities on a routine basis. Table 5 shows the monitoring frequencies.
- Include Production Well 8, the aquifer storage and recovery well (ASR), into the groundwater level monitoring network.
- Continue to closely monitor changes in MW-2, MW-5, and MW-6.
- Prepare biannual reports to assess the groundwater conditions.
- Increase monitoring frequency if groundwater production is anticipated to exceed 8,000 acre-feet per year.

The following groundwater management actions should be considered and explored:

- Lead the effort to contact the Department of Water Resources to reactivate unconfined aquifer monitoring wells in the area.
- Share this report with other interested parties.
- Groundwater levels in the unconfined aquifer should be lowered to about 10 feet bgs in the northern portions of the City. However, the City's proximity to the Delta, which is a constant recharge source, makes control of the water levels more difficult. Also, because of potential poor quality water, the use or discharge of the water may be difficult. Potential actions could include construction of shallow irrigation wells to water City parks and schools. Sub-drains should also be considered.

7 References

Bookman-Edmonston Engineering. January 2002. Mitigation Monitoring May through October 2001.

Bookman-Edmonston Engineering. June 2002. Mitigation Monitoring November 2001 through April 2002.

Bookman-Edmonston Engineering. January 2003. Mitigation Monitoring May through November 2002.

Bookman-Edmonston Engineering. June 2003. Mitigation Monitoring November 2002 through April 2003.

Bookman-Edmonston Engineering. January 2004. Mitigation Monitoring May through November 2003

Bookman-Edmonston Engineering. August 2003. Report on Drilling and Construction for Monitoring Wells MW-1, MW-2, and MW-5 Sites.

Bookman-Edmonston Engineering. July 2004. Report on Drilling and Construction for Monitoring Wells MW-3, MW-4, and MW-6 Sites.

Bookman-Edmonston Engineering. July 2004. Mitigation Monitoring November 2003 through April 2004.

Bookman-Edmonston Engineering. January 2005. Mitigation Monitoring May through October 2004.

Bookman-Edmonston Engineering. August 2005. Mitigation Monitoring November 2004 through April 2005.

Bookman-Edmonston Engineering. January 2008. Summary of Groundwater Conditions November 2005 through November 2007.

Boyle Engineering, October 2007. Report on 2007 Tracy GPS Subsidence Survey.

Boyle Engineering, October 2008. Report on 2008 Tracy GPS Subsidence Survey.

Central Valley Regional Water Quality Control Board. November 2013. Notice of Applicability (NOA) for General Water Quality Order 2012-0010-DWQ-RB5S-0002, Aquifer Storage and Recovery Program, City of Tracy (Well No. 8), San Joaquin County.

California Regional Water Quality Control Board Central Valley Region. December 2010. Approval to Proceed with Demonstration ASR Well Test, City of Tracy, San Joaquin County.

GEI Consultants Inc., Bookman-Edmonston Division. January 2009. Summary of Groundwater Conditions November 2007 through November 2008.

GEI Consultants Inc., Bookman-Edmonston Division. June 2011. Summary of Groundwater Conditions December 2008 through December 2010.

Padre Engineering, 2004, personnel communication with Mike Burke.

Pacific Municipal Consultants. April 2001. Groundwater Management Policy Mitigated Negative Declaration.

Todd, David Keith, 1980. Groundwater Hydrology.

Stoddard and Associates, October 2003. City of Tracy Subsidence Survey.

Stoddard and Associates, August 2004. City of Tracy Subsidence Survey.

Tables

TABLE 1
UNCONFINED-AQUIFER MONITORING WELLS
CONSTRUCTION DETAILS

Well ID	Site	Reference Point Elevation (Feet MSL)	Total Depth (Feet bgs)	Screen Interval (Feet bgs)
MW-1	**Grant Line (Chevron)**	26.38	19.0 [1]	UN
MW-3	**Grant Line (Chevron)**	27.23	19.0 [1]	UN
MW-8	**Alden Park (Chevron)**	50.65	19.5	4.5-19.5
MW-10	**Alden Park (Chevron)**	51.66	20.0	5.0-20.0
MW-11	**Alden Park (Chevron)**	55.09	22.0	7.0-22.0
MW-14	**Alden Park (Chevron)**	54.17	20.0	4.0-19.0
MW-4	**Tracy/Kerlinger**	187.88	140.0	UN
	(Aggregate Plant)			
MW-5	**Tracy/Kerlinger**	188.62	140.0	UN
	(Aggregate Plant)			

Feet MSL = feet mean sea level
Feet bgs = feet below ground surface
[1] = Assumed based on consistent field reports showing the depth varying between 18.4 and 18.8 feet at the wells
UN = Unknown

TABLE 2
CONFINED AQUIFER PRODUCTION WELL CONSTRUCTION DETAILS

WELL NAME	STRATA SEALED (feet)	FILTER PACK INTERVAL (feet)	SCREEN INTERVAL (feet)	CORCORAN CLAY INTERVAL (feet)	AQUIFER MONITORED (DWR defined)	AQUIFER MONITORED (Lower Aquifer Subdivided)
Lincoln	0-250	250-980	490-980	130-380[1]	Lower	Shallow
						Intermediate
						Deep
						Deeper
Production Well No. 1	0-300	300-980	450-550	204-293	Lower	Shallow
			580-980			Intermediate
						Deep
Production Well No. 2	0-250	250-850	420-850	220-270	Lower	Shallow
						Intermediate
						Deep
Production Well No. 3	0-250	250-890	420-890	174-270	Lower	Shallow
						Intermediate
						Deep
Production Well No. 4	0-250	250-940	380-940	220-270	Lower	Shallow
						Intermediate
						Deep
Production Well No. 5			410-480		Lower	Shallow
(Lewis Manor)			601-630			Intermediate
			650-670			Deep
			805-830			Deeper
			900-930			
	0-305	305-990	965-990	229-390[1]		
Production Well No. 6	0-500	500-690	550-598	250-350	Lower	Intermediate
(Park and Ride)	690-700	700-850	610-636			Deep
	850-870	870-1216	656-678			Deeper
			738-754			
			774-796			
			966-982			
			1014-1122			
			1176-1196			
Production Well No. 7	0-490	490-750	550-598	200-340	Lower	Intermediate
(Ball Park)	750-770	770-914	570-732			Deep
			850-874			
Production Well No. 8	0-340	340-850	370-460	240-360	Lower	Shallow
(ASR)			510-640			Intermediate
			680-820			Deep

[1] = Clay interval includes Cocoran clay between about 310 and 380 feet, but depth may vary within the City
NA = Not available

TABLE 3

CONFINED AQUIFER MONITORING WELLS CONSTRUCTION DETAILS

WELL NAME	STRATA SEALED (feet)	FILTER PACK INTERVAL (feet)	SCREEN INTERVAL (feet)	CORCORAN CLAY INTERVAL (feet)	AQUIFER MONITORED (DWR defined)	AQUIFER MONITORED (Below Corcoran Clay Subdivided)
NESTED MONITORING WELLS						
PW-5A	0-100 390-410	410-580	420-460	229-390[1]	Lower	Shallow[2]
PW-5B	580-590	590-780	610-670	229-390[1]	Lower	Intermediate
PW-5C	780-790	790-870	810-830	229-390[1]	Lower	Deep
PW-5D	870-880	880-1020	910-930 970-990	229-390[1]	Lower	Deeper
CLUSTERED MONITORING WELLS						
MW-1A	0-400	400-480	428-468	300-430	Lower	Shallow
MW-1B	0-590	590-670	618-658	300-430	Lower	Intermediate
MW-1C	0-720	720-800	748-788	300-430	Lower	Deep
MW-2A	0-400	400-480	426-466	234-430	Lower	Shallow
MW-2B	0-614	614-690	634-674	234-430	Lower	Intermediate
MW-2C	0-760	760-820	770-810	234-430	Lower	Deep
MW-3A	0-370	370-415	382-402	210-370	Lower	Shallow
MW-3B	0-530	530-595	540-580	210-370	Lower	Intermediate
MW-3C	0-726	726-820	770-810	210-370	Lower	Deep
MW-4A	0-440	440-505	450-490	240-450	Lower	Shallow
MW-4B	0-660	660-715	680-700	240-450	Lower	Intermediate
MW-4C	0-760	760-820	770-810	240-450	Lower	Deep
MW-5A	0-390	390-460	406-446	290-410	Lower	Shallow
MW-5B	0-560	560-640	576-616	290-410	Lower	Intermediate
MW-5C	0-750	750-820	770-810	290-410	Lower	Deep
MW-6A	0-400	410-450	400-465	320-400	Lower	Shallow
MW-6B	0-560	560-645	590-630	320-400	Lower	Intermediate
MW-6C	0-730	755-810	755-795	320-400	Lower	Deep

1 = Clay interval includes Corcoran clay.

2 = Shallow aquifer as defined as between 380 to 420 is present at a lower depth at this location

TABLE 4
SUMMARY OF REFERENCE POINT ELEVATIONS

WELL NAME	ESTIMATED GROUND SURFACE ELEVATION (feet)	SURVEYED ELEVATIONS TOP OF MEASURING PORT (feet)	REFERENCE POINT (RP) DESCRIPTION	HEIGHT OF RP ABOVE GROUND SURFACE (feet)
PRODUCTION WELLS				
Lincoln	42.2		Top of 2-inch-diameter sounding tube	1.58
Production Well No. 1	198		Top of 3-inch-diameter air vent, west side of well	1.25
Production Well No. 2	199.84		Top of 2-inch-diameter sounding tube, east side of well	2.67
Production Well No. 3	208.61		Unknown	2.6
Production Well No. 4	190.41		Top of 2-inch-diameter sounding tube, east side of well	2.08
Production Well No. 5 (Lewis Manor)	47		Unknown	2
Production Well No. 6 (Park & Ride)	20		Unknown	Unknown
Production Well No. 7 (Ball Park)	25		Unknown	Unknown
NESTED MONITORING WELLS				
PW-5A	47		Unknown	Unknown
PW-5B	47		Unknown	Unknown
PW-5C	47		Unknown	Unknown
PW-5D	47		Unknown	Unknown
CLUSTERED MONITORING WELLS				
MW-1A		49.251	Top of sounding port on well cap	3.793
MW-1B		50.094	Top of sounding port on well cap	1.234
MW-1C		51.203	Top of sounding port on well cap	1.492
MW-2A		92.586	Top of sounding port on well cap	1.759
MW-2B		92.525	Top of sounding port on well cap	1.214
MW-2C		92.533	Top of sounding port on well cap	0.925
MW-3A		137.859	Top of sounding port on well cap	2.453
MW-3B		138.08	Top of sounding port on well cap	1.713
MW-3C		138.22	Top of sounding port on well cap	1.743
MW-4A		104.079	Top of sounding port on well cap	2.587
MW-4B		102.753	Top of sounding port on well cap	2.284
MW-4C		103.110	Top of sounding port on well cap	2.533
MW-5A		48.394	Top of sounding port on well cap	1.980
MW-5B		47.824	Top of sounding port on well cap	1.886
MW-5C		48.062	Top of sounding port on well cap	1.971
MW-6A		26.520	Top of sounding port on well cap	2.539
MW-6B		26.653	Top of sounding port on well cap	2.508
MW-6C		26.789	Top of sounding port on well cap	2.595

Estimated elevations from U.S. Geological Survey topographic maps
Survey elevations of the ground surface from the City's files at the Lincoln well and Production Wells 1
Survey elevations of the top of each monitoring well from Stoddard and Associates

TABLE 5
GROUNDWATER MONITORING FREQUENCY

Well ID	Owner	Frequency		
		Groundwater Pumping	GW Level and Conductivity	Water Quality [2]
MW-8	Alden Park (Chevron)	--	Annually	Annually
MW-10	Alden Park (Chevron)	--	Annually	Annually
MW-11	Alden Park (Chevron)	--	Annually	Annually
MW-14	Alden Park (Chevron)	--	Annually	Annually
MW-1	Grant Line (Chevron)	--	Semi-Annually	Semi-Annually
MW-3	Grant Line (Chevron)	--	Semi-Annually	Semi-Annually
MW-4	Tracy/Kerlinger	--	Annually	Annually
MW-5	Tracy/Kerlinger	--	Annually	Annually
MW-1B	City of Tracy	--	Quarterly [1]	Quarterly [1]
MW-1C	City of Tracy	--	Quarterly [1]	Quarterly [1]
MW-2A	City of Tracy	--	Quarterly [1]	Quarterly [1]
MW-2B	City of Tracy	--	Quarterly [1]	Quarterly [1]
MW-2C	City of Tracy	--	Quarterly [1]	Quarterly [1]
MW-3A	City of Tracy	--	Quarterly [1]	Quarterly [1]
MW-3B	City of Tracy	--	Quarterly [1]	Quarterly [1]
MW-3C	City of Tracy	--	Quarterly [1]	Quarterly [1]
MW-4A	City of Tracy	--	Quarterly [1]	Quarterly [1]
MW-4B	City of Tracy	--	Quarterly [1]	Quarterly [1]
MW-4C	City of Tracy	--	Quarterly [1]	Quarterly [1]
MW-5A	City of Tracy	--	Quarterly [1]	Quarterly [1]
MW-5B	City of Tracy	--	Quarterly [1]	Quarterly [1]
MW-5C	City of Tracy	--	Quarterly [1]	Quarterly [1]
MW-6A	City of Tracy	--	Quarterly [1]	Quarterly [1]
MW-6B	City of Tracy	--	Quarterly [1]	Quarterly [1]
MW-6C	City of Tracy	--	Quarterly [1]	Quarterly [1]
Lincoln	City of Tracy	Monthly	Quarterly [1]	Quarterly [1]
Production Well No. 1	City of Tracy	Monthly	Quarterly [1]	Quarterly [1]
Production Well No. 2	City of Tracy	Monthly	Quarterly [1]	Quarterly [1]
Production Well No. 3	City of Tracy	Monthly	Quarterly [1]	Quarterly [1]
Production Well No. 4	City of Tracy	Monthly	Quarterly [1]	Quarterly [1]
Production Well No. 5	City of Tracy	Monthly	Quarterly [1]	Quarterly [1]
Production Well No. 6	City of Tracy	Monthly	Quarterly [1]	Quarterly [1]
Production Well No. 7	City of Tracy	Monthly	Quarterly [1]	Quarterly [1]
Production Well No. 8	City of Tracy	Monthly	Quarterly [1]	Quarterly [1]

Notes:

[1] Quarterly monitoring performed in March, July, August, October

[2] Monitoring Parameters: Nitrate, Sulfate, Total Desolved Solids (TDS), Boron, Chloride

-- Indicates Not Monitored

Figures

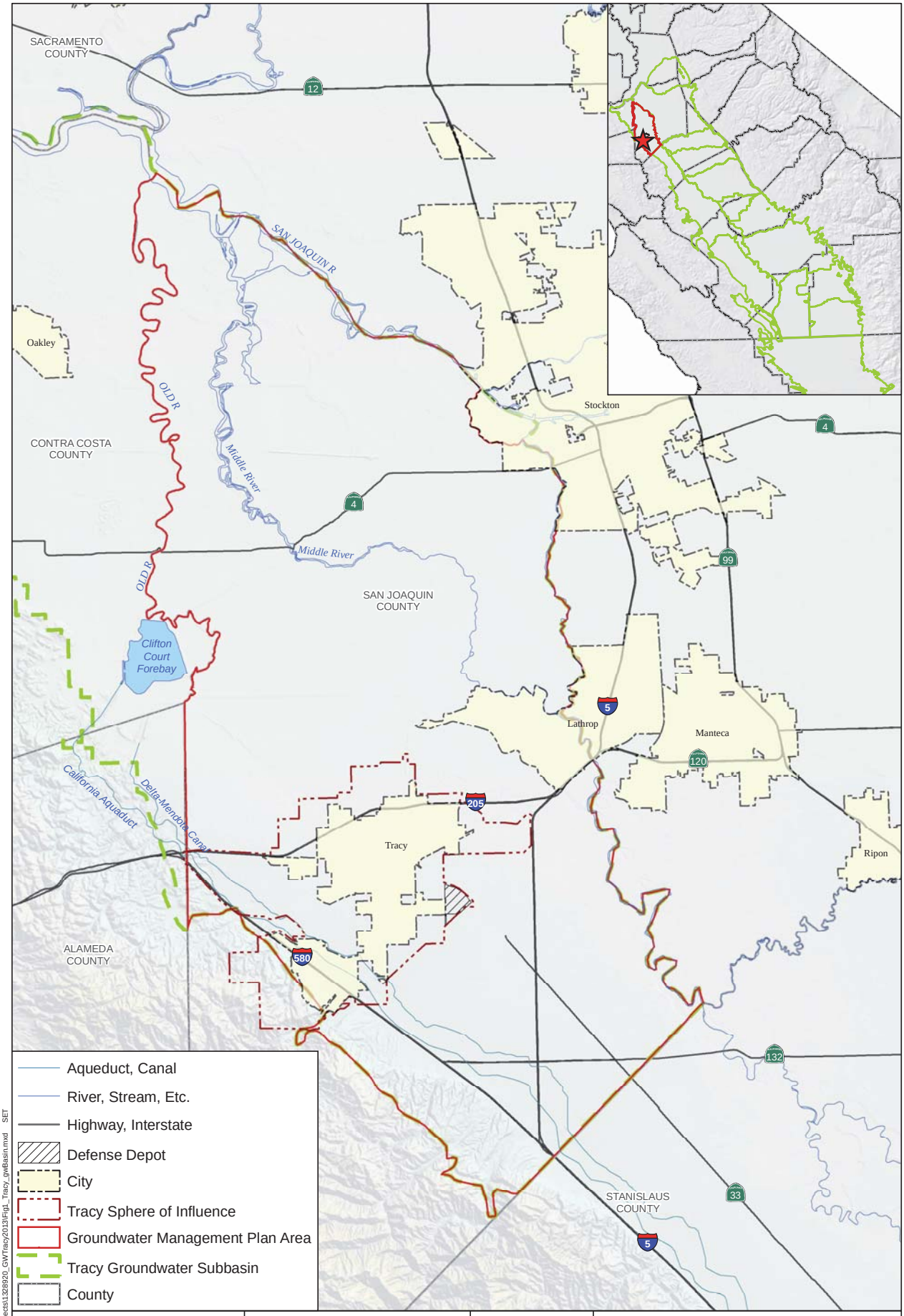

Summary of Groundwater Conditions
February 2013 through September 2013

City of Tracy
San Joaquin County, California

GEI Consultants

TRACY GROUNDWATER SUBBASIN

DECEMBER 2013 FIGURE 1

10-Mar-2014 Z:\Projects\1328920_GW\Tracy2013\Fig1_Tracy_gwBasin.mxd SET

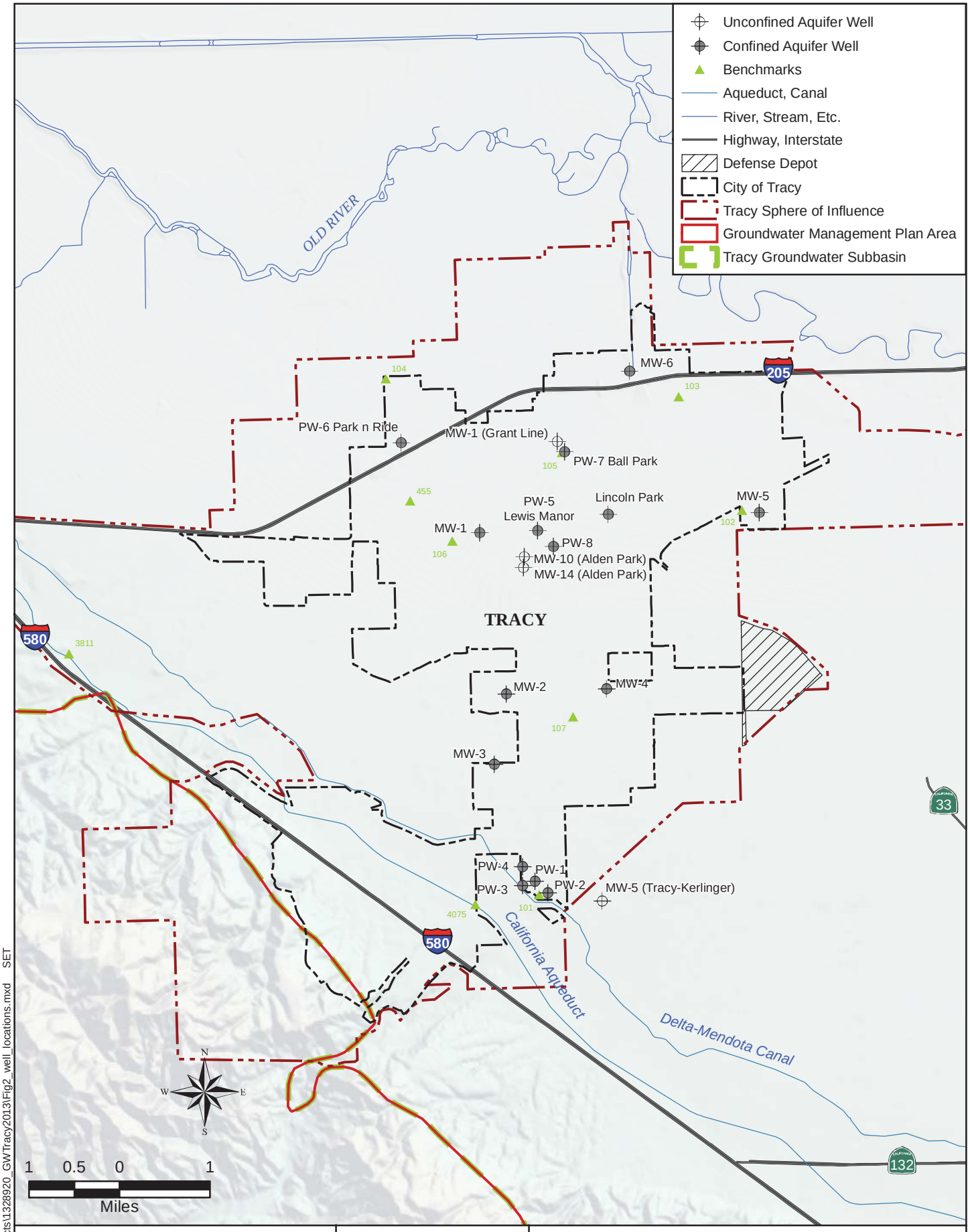

Summary of Groundwater Conditions
February 2013 through September 2013

City of Tracy
San Joaquin County, California

GEI Consultants

PRODUCTION WELL AND CLUSTERED MONITORING WELL LOCATIONS

DECEMBER 2013

FIGURE 2

11Mar2014 Z:\Projects\1328920_GWTracy2013\Fig2_well_locations.mxd SET

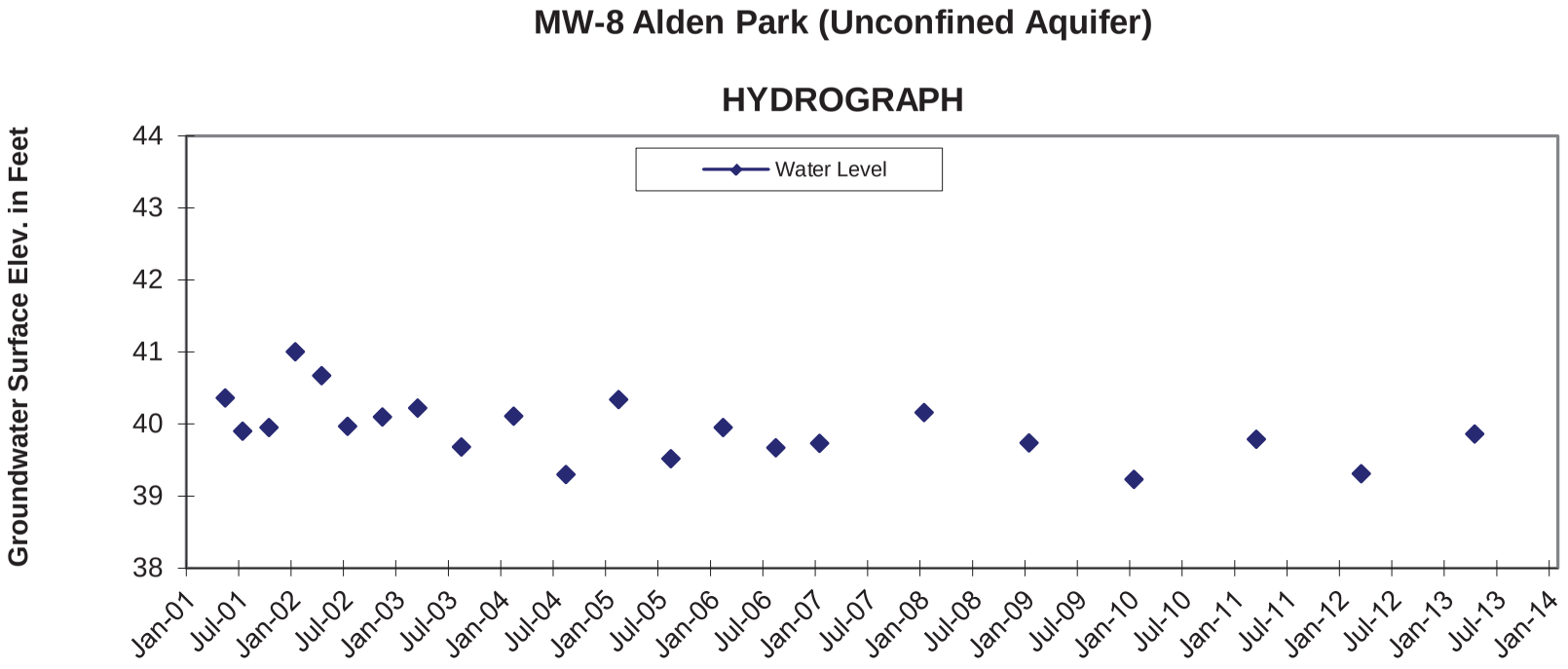
MW-8 Alden Park (Unconfined Aquifer)
HYDROGRAPH
Groundwater Surface Elev. in Feet
Water Level
44
43
42
41
40
39
38
Jan-01
Jul-01
Jan-02
Jul-02
Jan-03
Jul-03
Jan-04
Jul-04
Jan-05
Jul-05
Jan-06
Jul-06
Jan-07
Jul-07
Jan-08
Jul-08
Jan-09
Jul-09
Jan-10
Jul-10
Jan-11
Jul-11
Jan-12
Jul-12
Jan-13
Jul-13
Jan-14

Figure 3

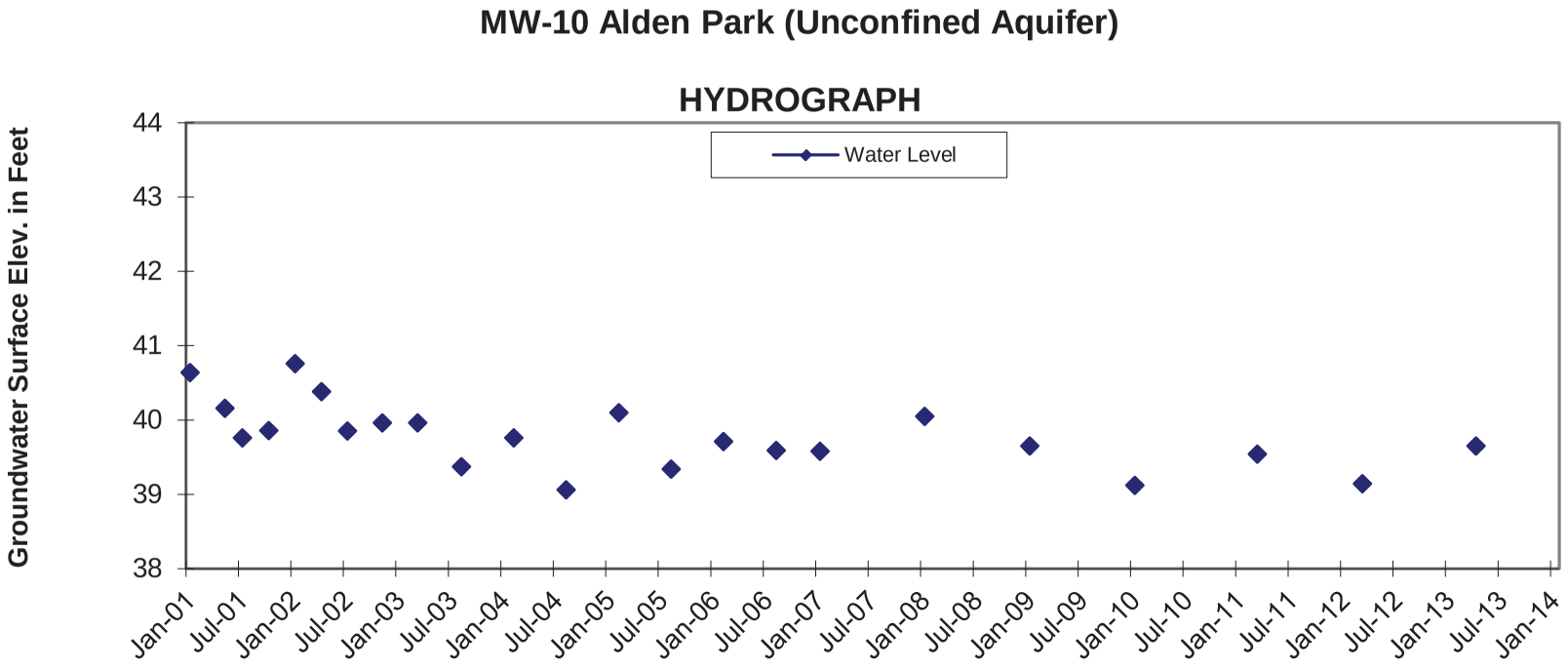
MW-10 Alden Park (Unconfined Aquifer)
HYDROGRAPH
Groundwater Surface Elev. in Feet
Water Level
44
43
42
41
40
39
38
Jan-01
Jul-01
Jan-02
Jul-02
Jan-03
Jul-03
Jan-04
Jul-04
Jan-05
Jul-05
Jan-06
Jul-06
Jan-07
Jul-07
Jan-08
Jul-08
Jan-09
Jul-09
Jan-10
Jul-10
Jan-11
Jul-11
Jan-12
Jul-12
Jan-13
Jul-13
Jan-14

Figure 4

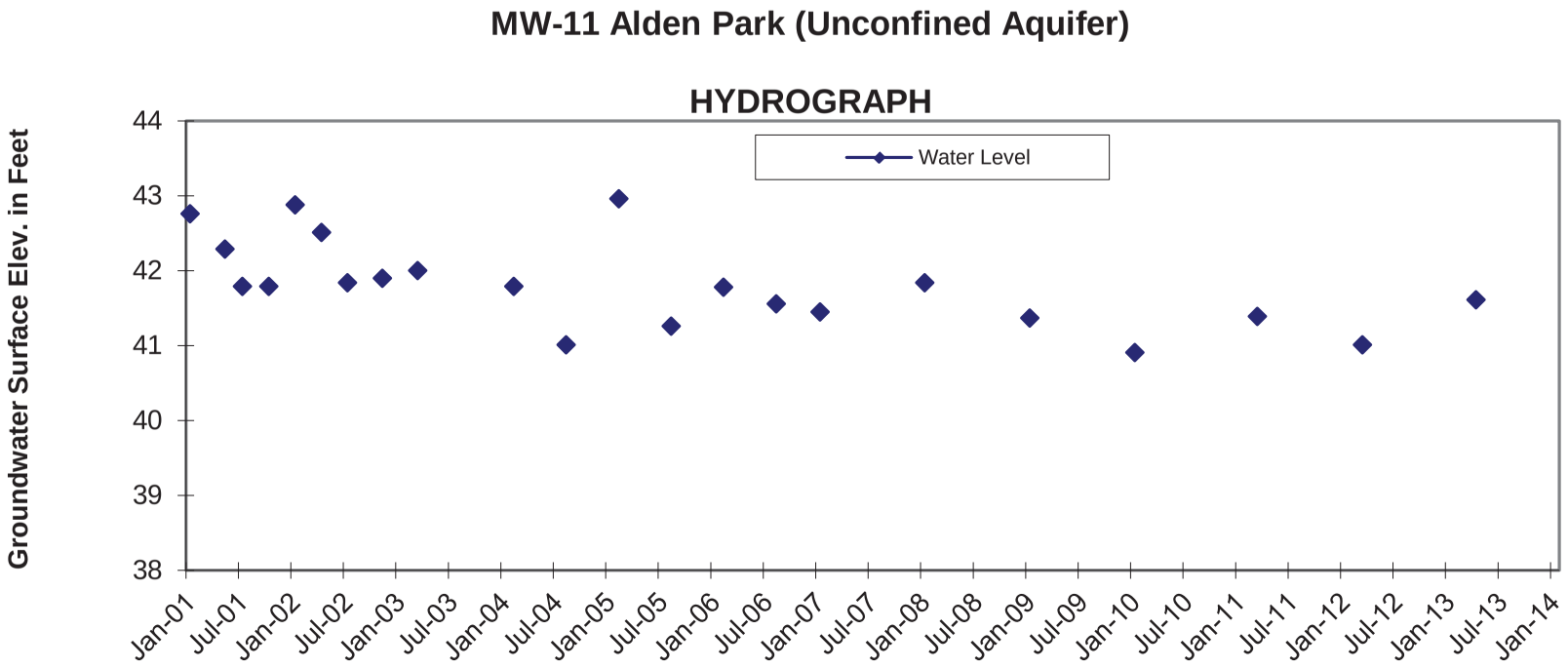
MW-11 Alden Park (Unconfined Aquifer)
HYDROGRAPH
Groundwater Surface Elev. in Feet
Water Level
44
43
42
41
40
39
38
Jan-01
Jul-01
Jan-02
Jul-02
Jan-03
Jul-03
Jan-04
Jul-04
Jan-05
Jul-05
Jan-06
Jul-06
Jan-07
Jul-07
Jan-08
Jul-08
Jan-09
Jul-09
Jan-10
Jul-10
Jan-11
Jul-11
Jan-12
Jul-12
Jan-13
Jul-13
Jan-14

Figure 5

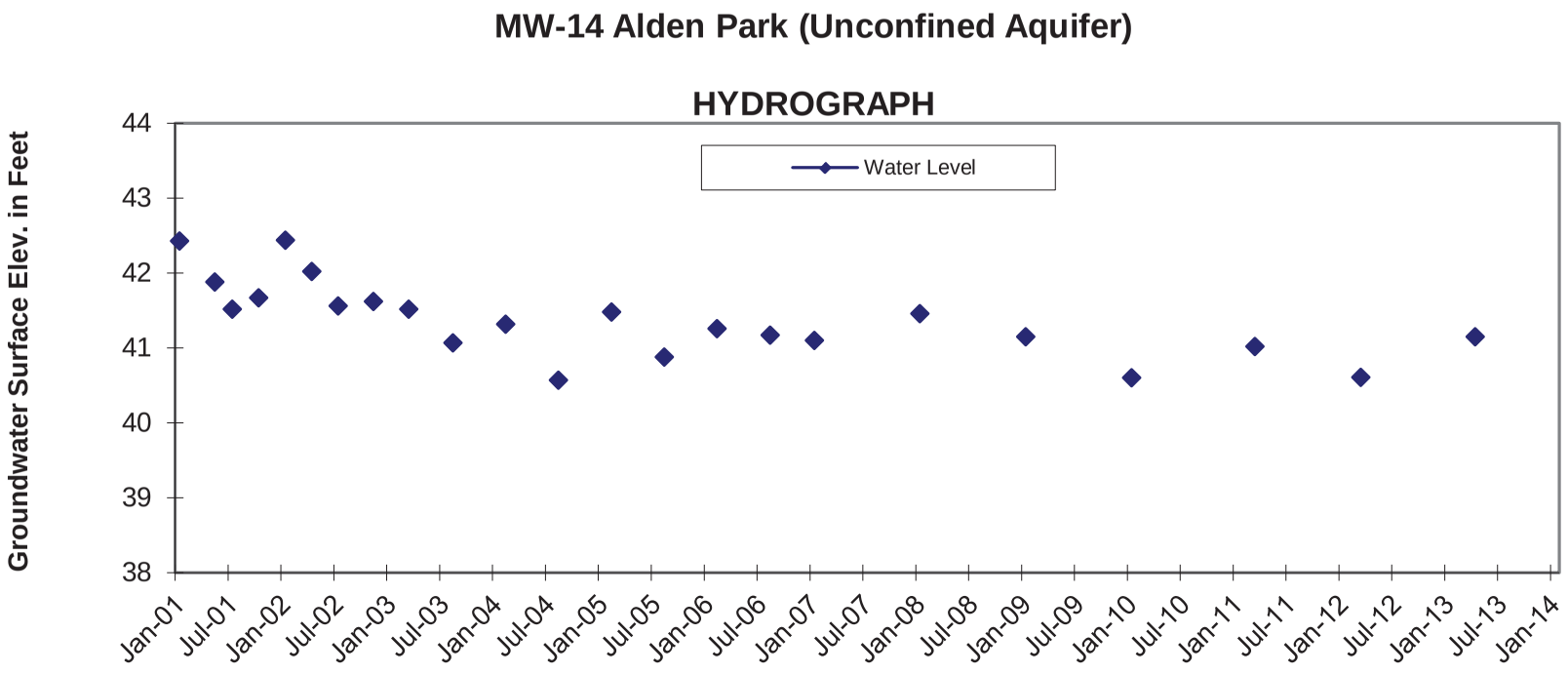
MW-14 Alden Park (Unconfined Aquifer)
HYDROGRAPH
Groundwater Surface Elev. in Feet
Water Level
44
43
42
41
40
39
38
Jan-01
Jul-01
Jan-02
Jul-02
Jan-03
Jul-03
Jan-04
Jul-04
Jan-05
Jul-05
Jan-06
Jul-06
Jan-07
Jul-07
Jan-08
Jul-08
Jan-09
Jul-09
Jan-10
Jul-10
Jan-11
Jul-11
Jan-12
Jul-12
Jan-13
Jul-13
Jan-14

Figure 6

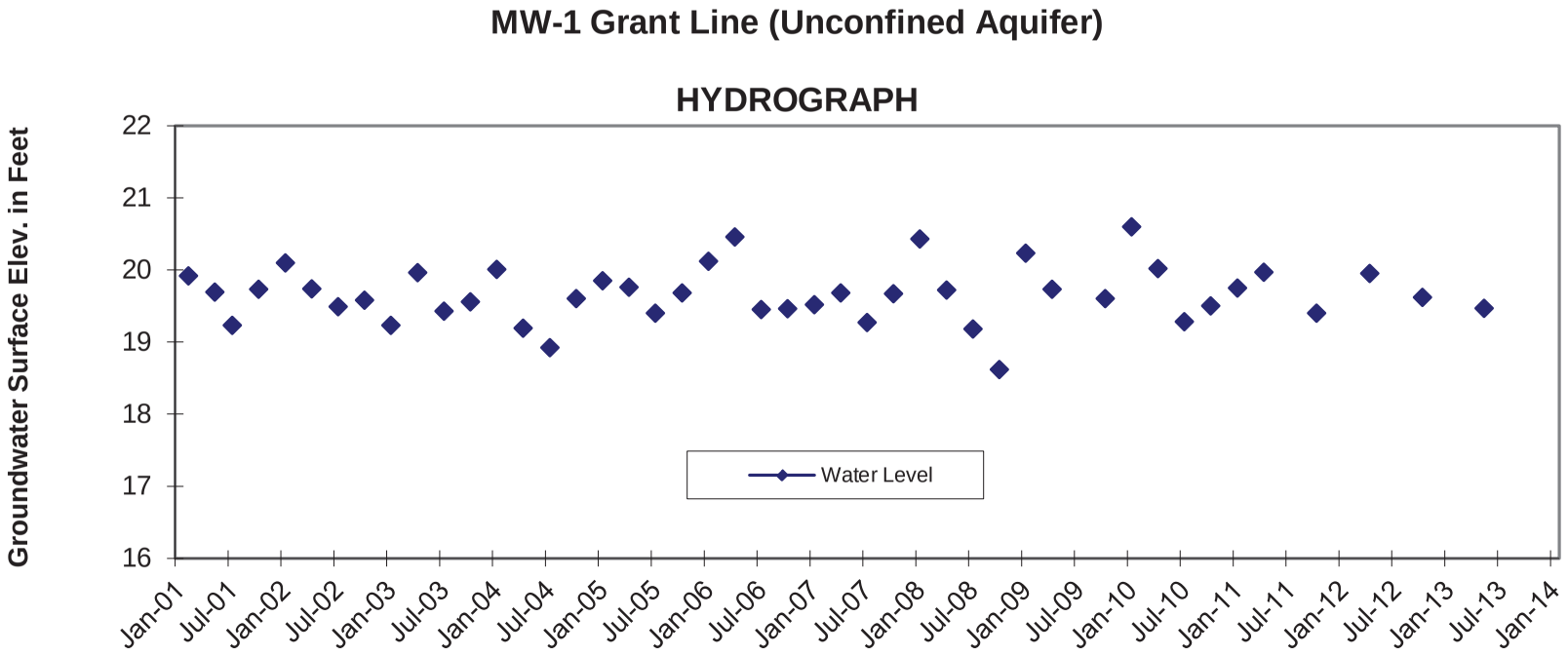
MW-1 Grant Line (Unconfined Aquifer)
HYDROGRAPH
Groundwater Surface Elev. in Feet
22
21
20
19
18
17
16
Water Level
Jan-01
Jul-01
Jan-02
Jul-02
Jan-03
Jul-03
Jan-04
Jul-04
Jan-05
Jul-05
Jan-06
Jul-06
Jan-07
Jul-07
Jan-08
Jul-08
Jan-09
Jul-09
Jan-10
Jul-10
Jan-11
Jul-11
Jan-12
Jul-12
Jan-13
Jul-13
Jan-14

Figure 7

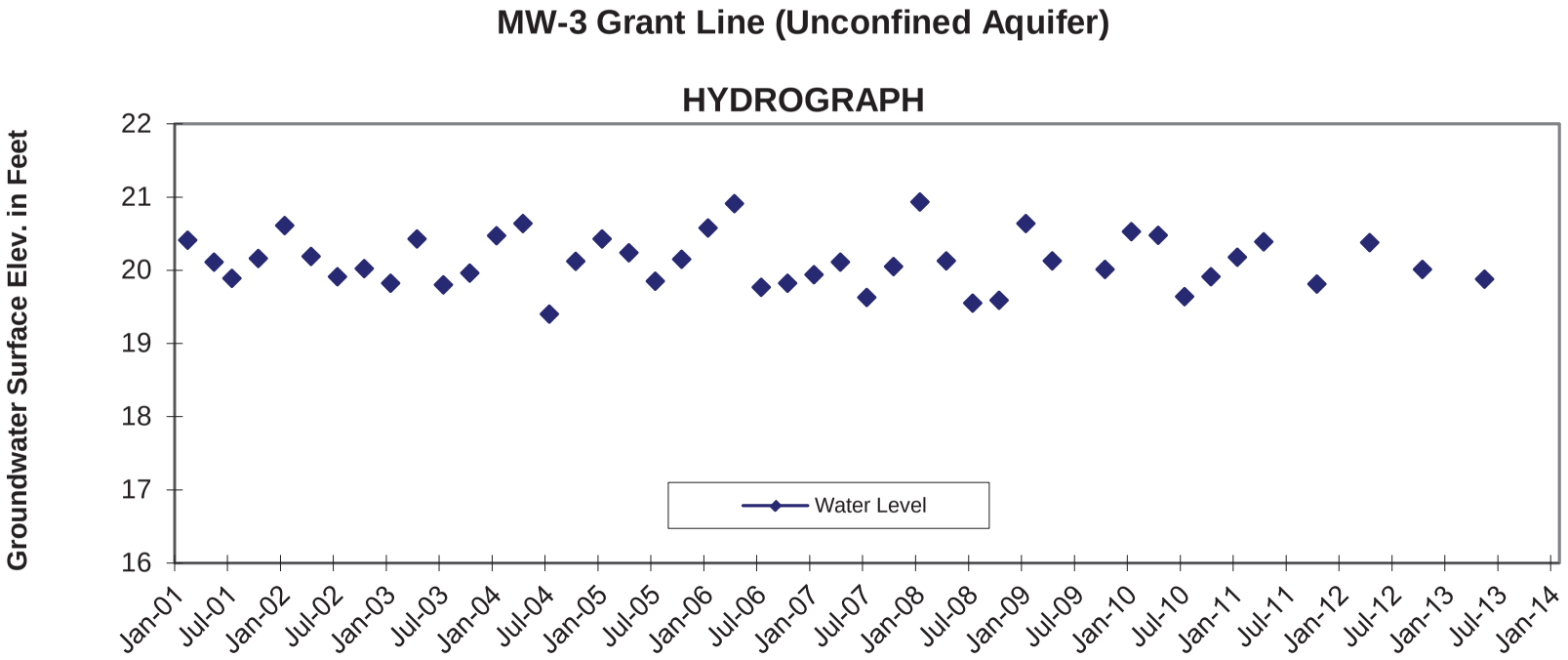
MW-3 Grant Line (Unconfined Aquifer)
HYDROGRAPH
Groundwater Surface Elev. in Feet
22
21
20
19
18
17
16
Water Level
Jan-01
Jul-01
Jan-02
Jul-02
Jan-03
Jul-03
Jan-04
Jul-04
Jan-05
Jul-05
Jan-06
Jul-06
Jan-07
Jul-07
Jan-08
Jul-08
Jan-09
Jul-09
Jan-10
Jul-10
Jan-11
Jul-11
Jan-12
Jul-12
Jan-13
Jul-13
Jan-14

Figure 8

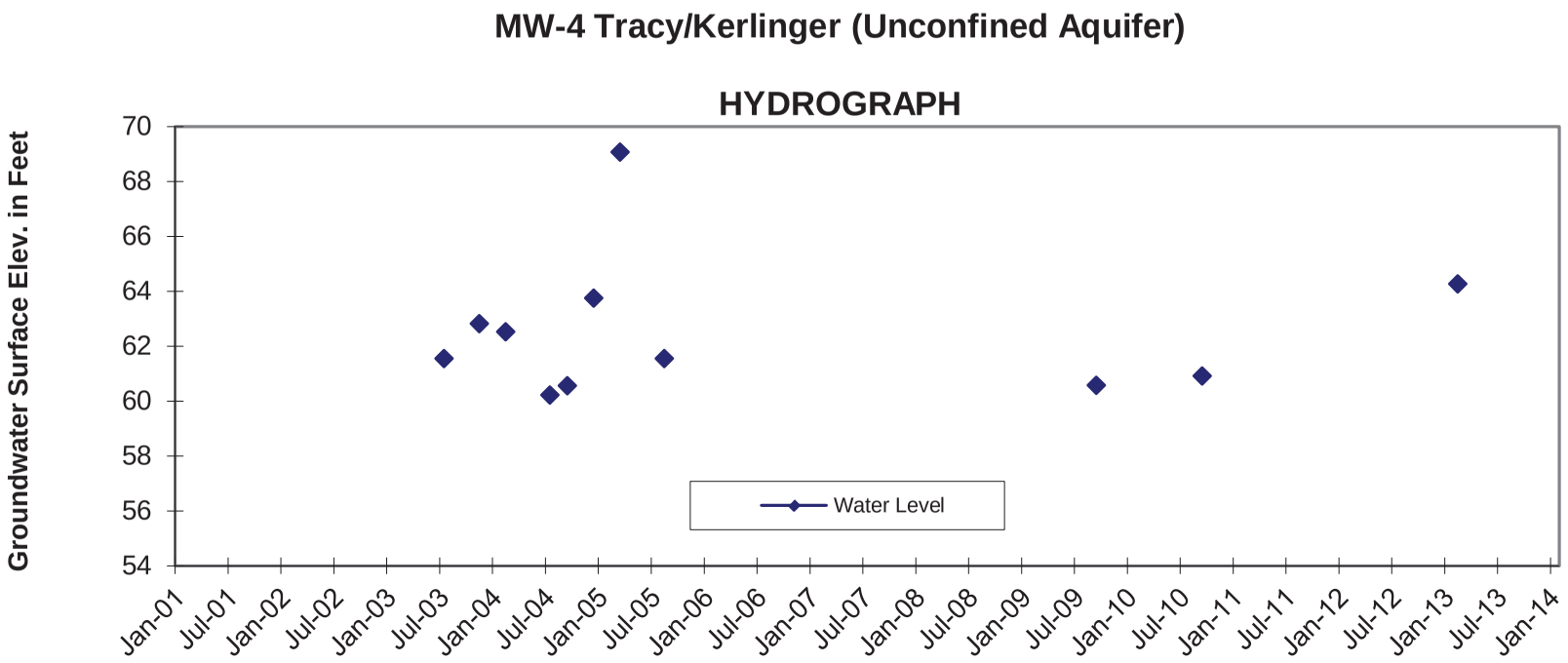
MW-4 Tracy/Kerlinger (Unconfined Aquifer)
HYDROGRAPH
Groundwater Surface Elev. in Feet
70
68
66
64
62
60
58
56
54
Water Level
Jan-01
Jul-01
Jan-02
Jul-02
Jan-03
Jul-03
Jan-04
Jul-04
Jan-05
Jul-05
Jan-06
Jul-06
Jan-07
Jul-07
Jan-08
Jul-08
Jan-09
Jul-09
Jan-10
Jul-10
Jan-11
Jul-11
Jan-12
Jul-12
Jan-13
Jul-13
Jan-14

Figure 9

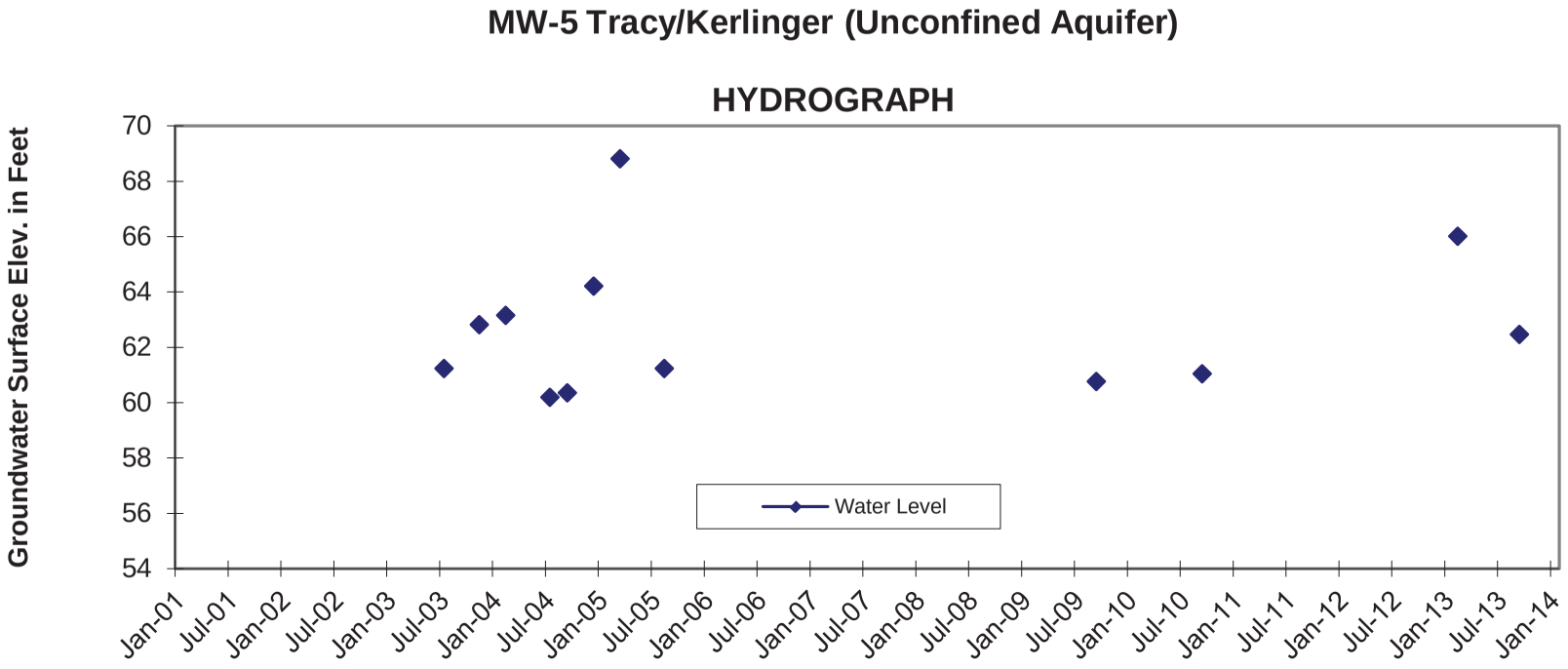
MW-5 Tracy/Kerlinger (Unconfined Aquifer)
HYDROGRAPH
Groundwater Surface Elev. in Feet
70
68
66
64
62
60
58
56
54
Water Level
Jan-01
Jul-01
Jan-02
Jul-02
Jan-03
Jul-03
Jan-04
Jul-04
Jan-05
Jul-05
Jan-06
Jul-06
Jan-07
Jul-07
Jan-08
Jul-08
Jan-09
Jul-09
Jan-10
Jul-10
Jan-11
Jul-11
Jan-12
Jul-12
Jan-13
Jul-13
Jan-14

FIGURE 10

LINCOLN WELL

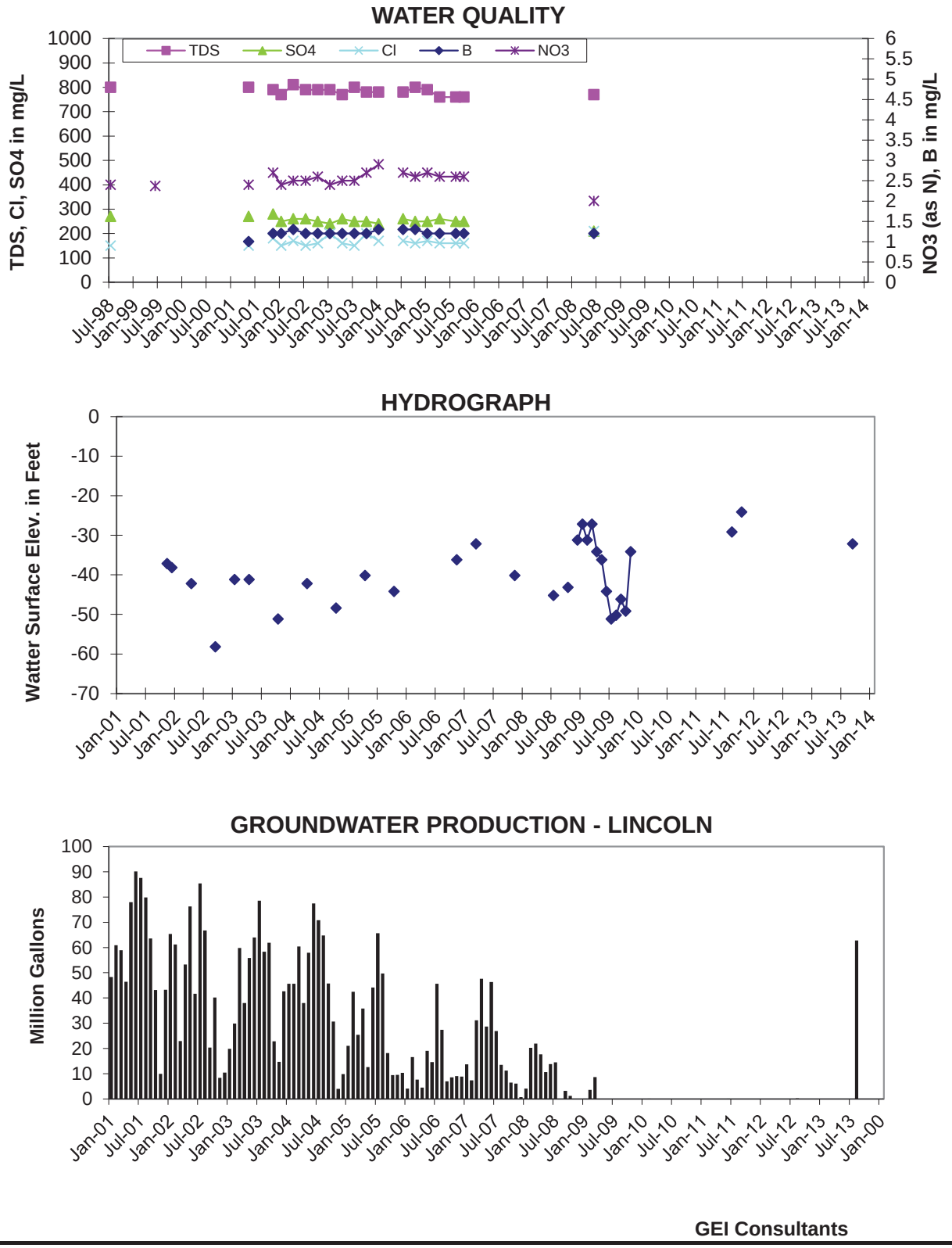

FIGURE 11

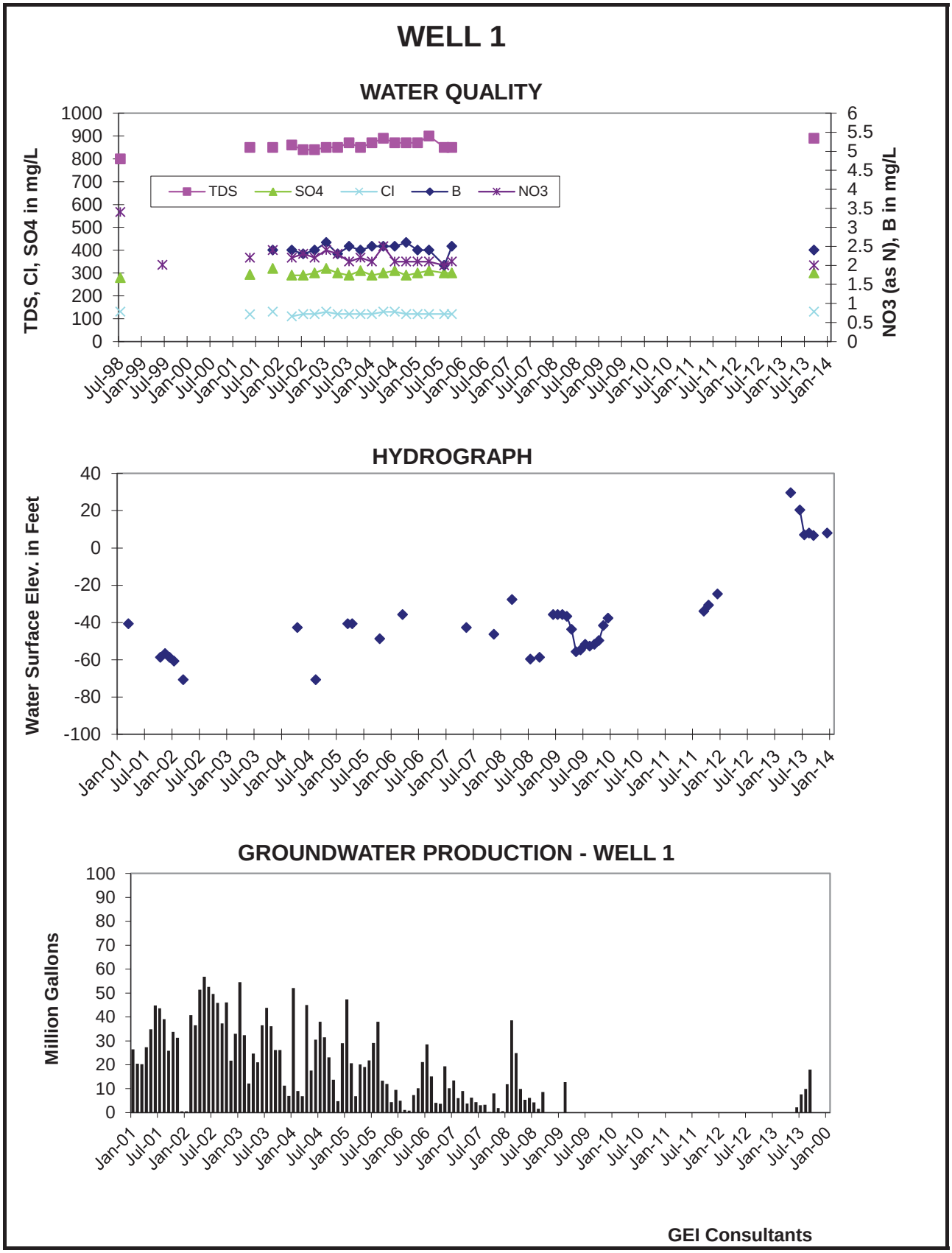
WELL 1
WATER QUALITY
TDS, Cl, SO4 in mg/L
NO3 (as N), B in mg/L
TDS
SO4
Cl
B
NO3
HYDROGRAPH
Water Surface Elev. in Feet
GROUNDWATER PRODUCTION - WELL 1
Million Gallons
GEI Consultants

FIGURE 12

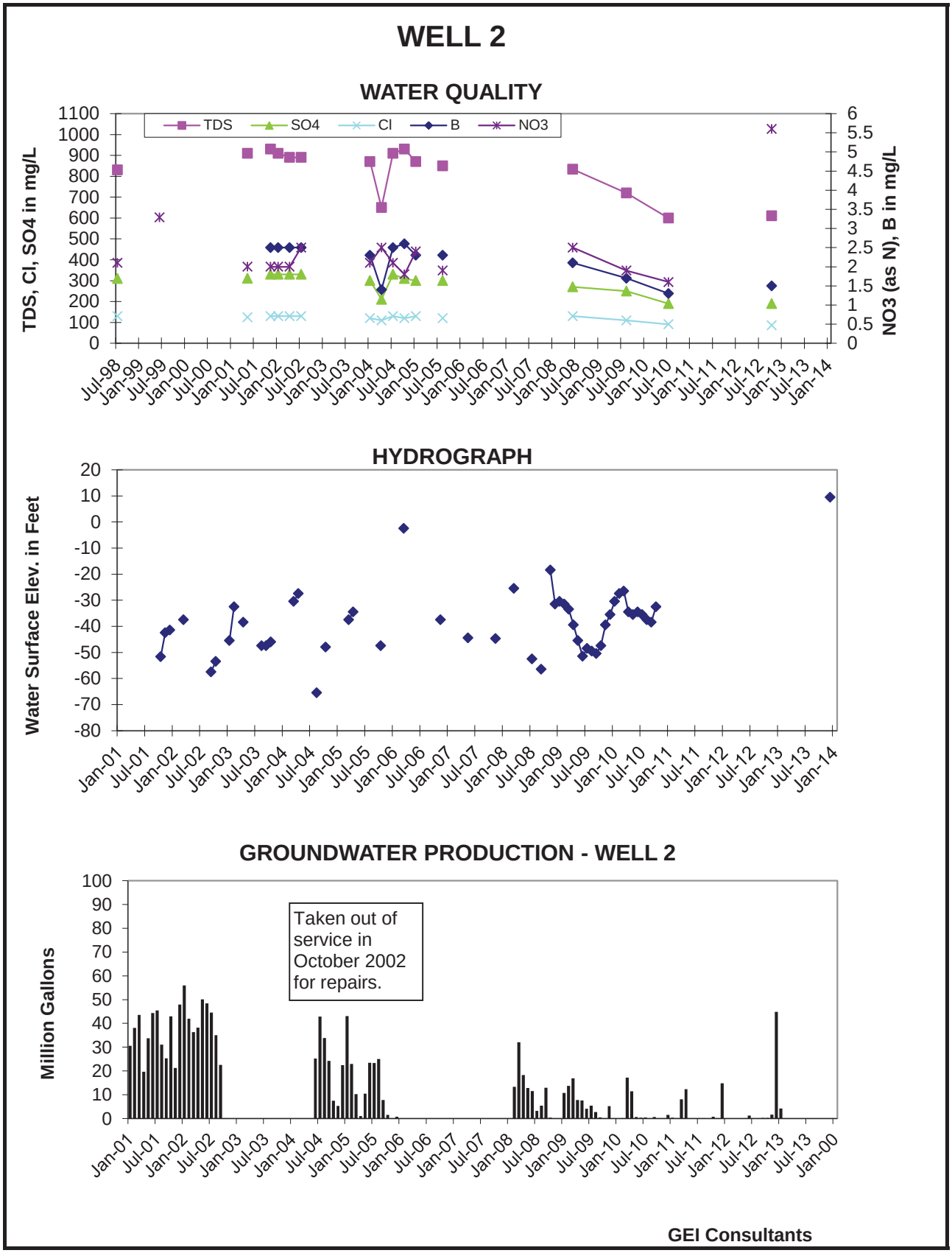
WELL 2
WATER QUALITY
TDS
SO4
Cl
B
NO3
TDS, Cl, SO4 in mg/L
NO3 (as N), B in mg/L
HYDROGRAPH
Water Surface Elev. in Feet
GROUNDWATER PRODUCTION - WELL 2
Million Gallons
Taken out of service in October 2002 for repairs.
GEI Consultants

FIGURE 13

WELL 3

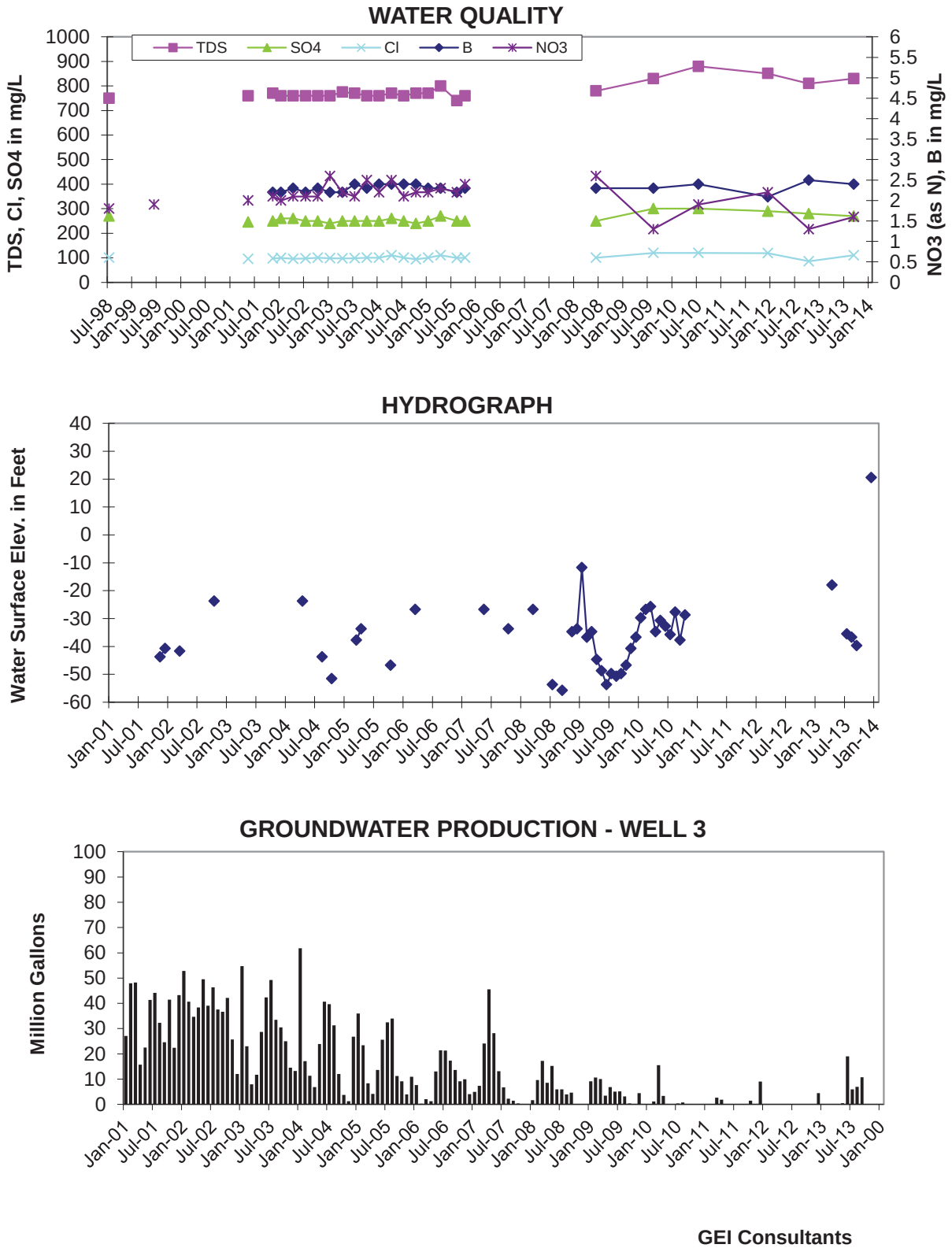

FIGURE 14

WELL 4

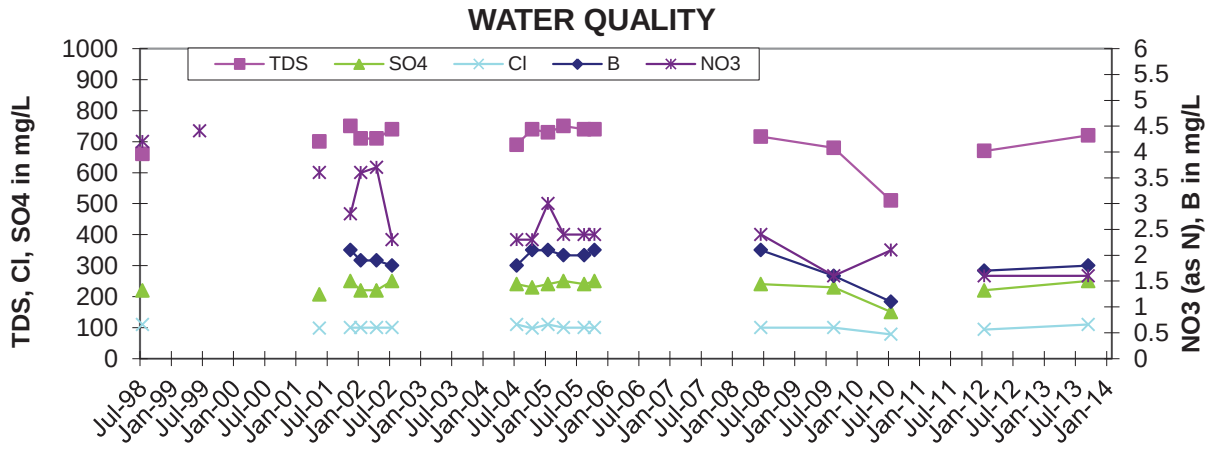

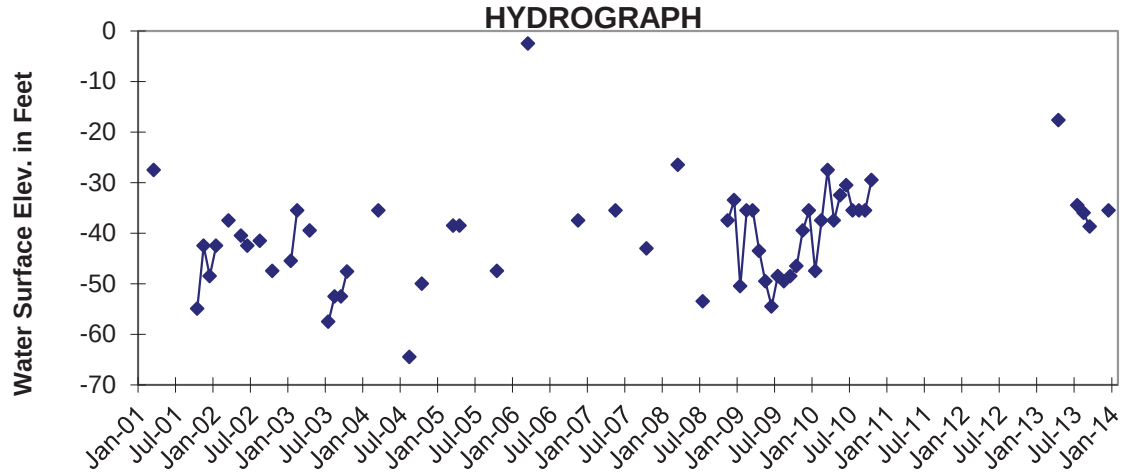

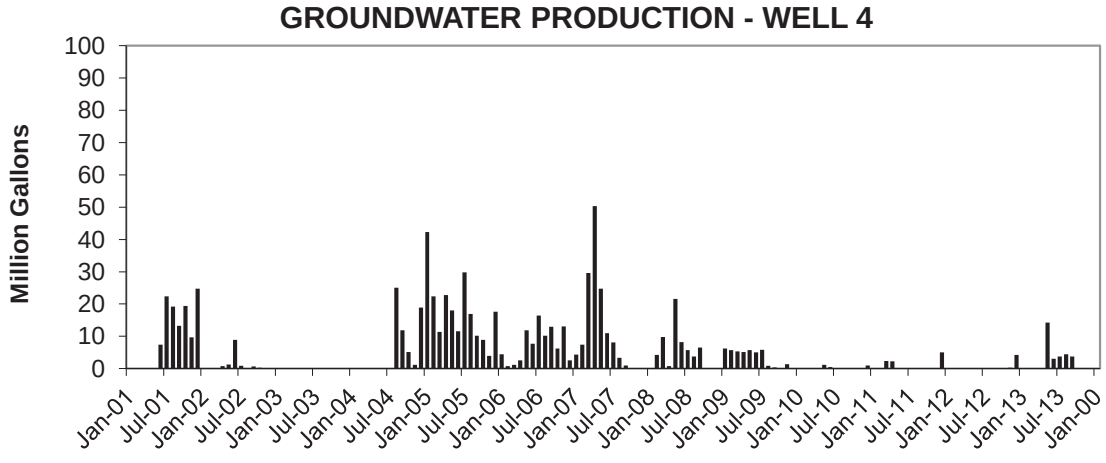

GEI Consultants

FIGURE 15

WELL 5

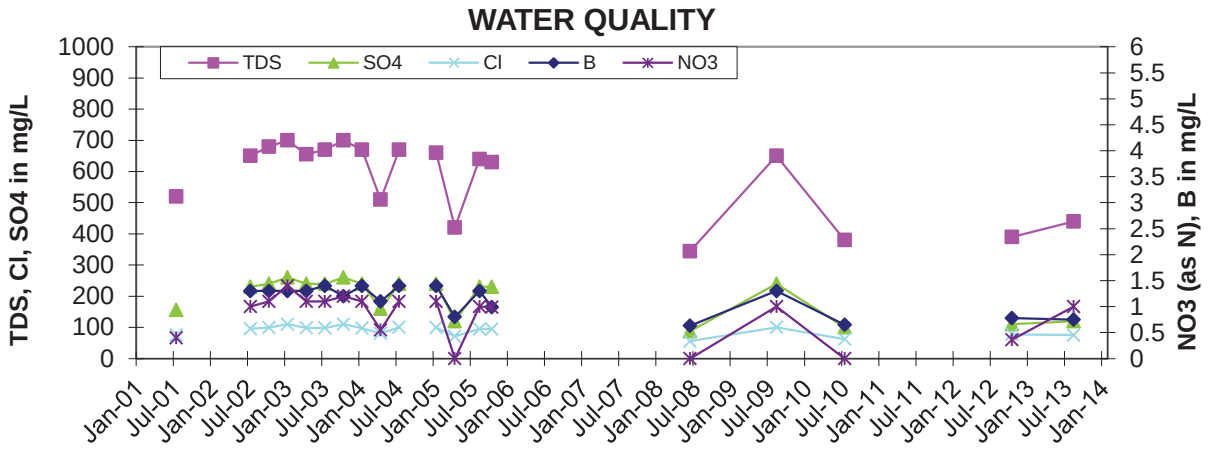

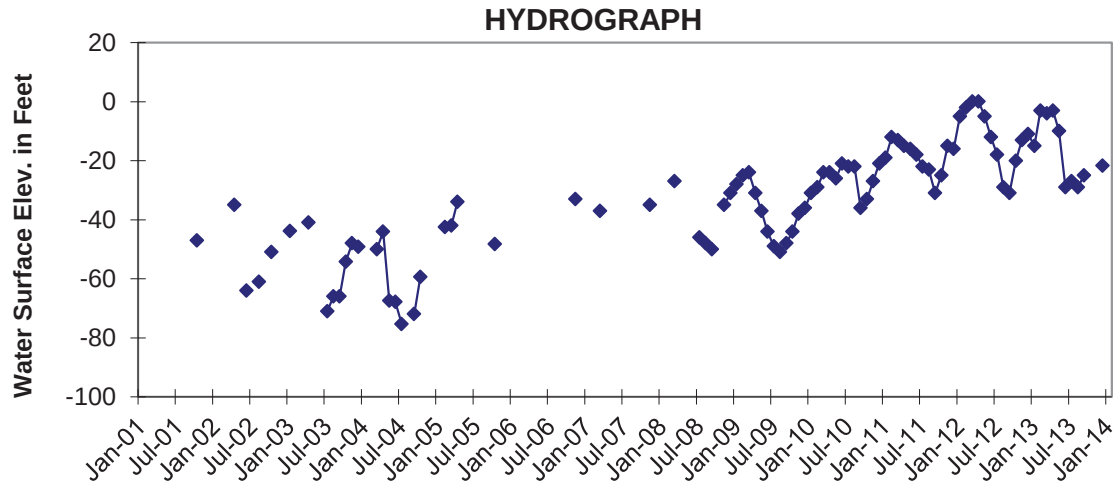

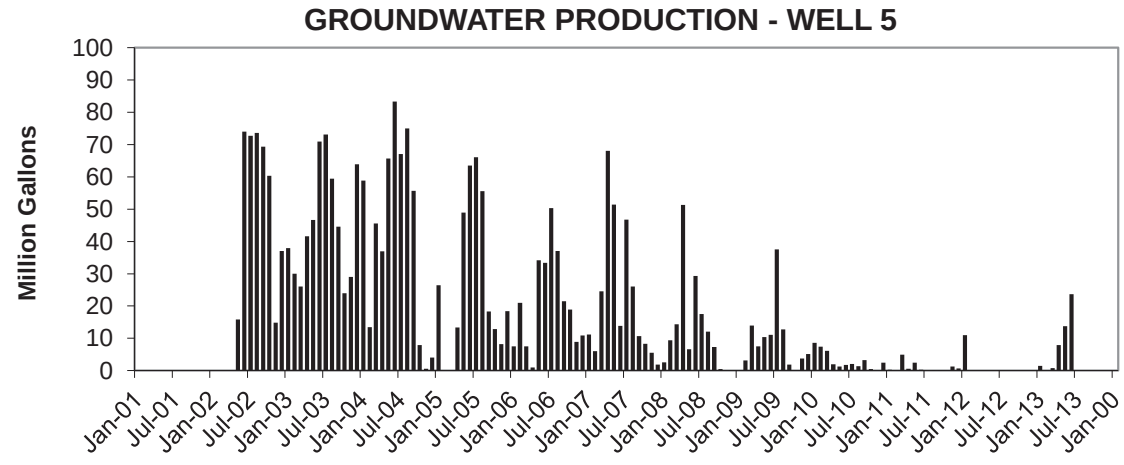

GEI Consultants

FIGURE 16

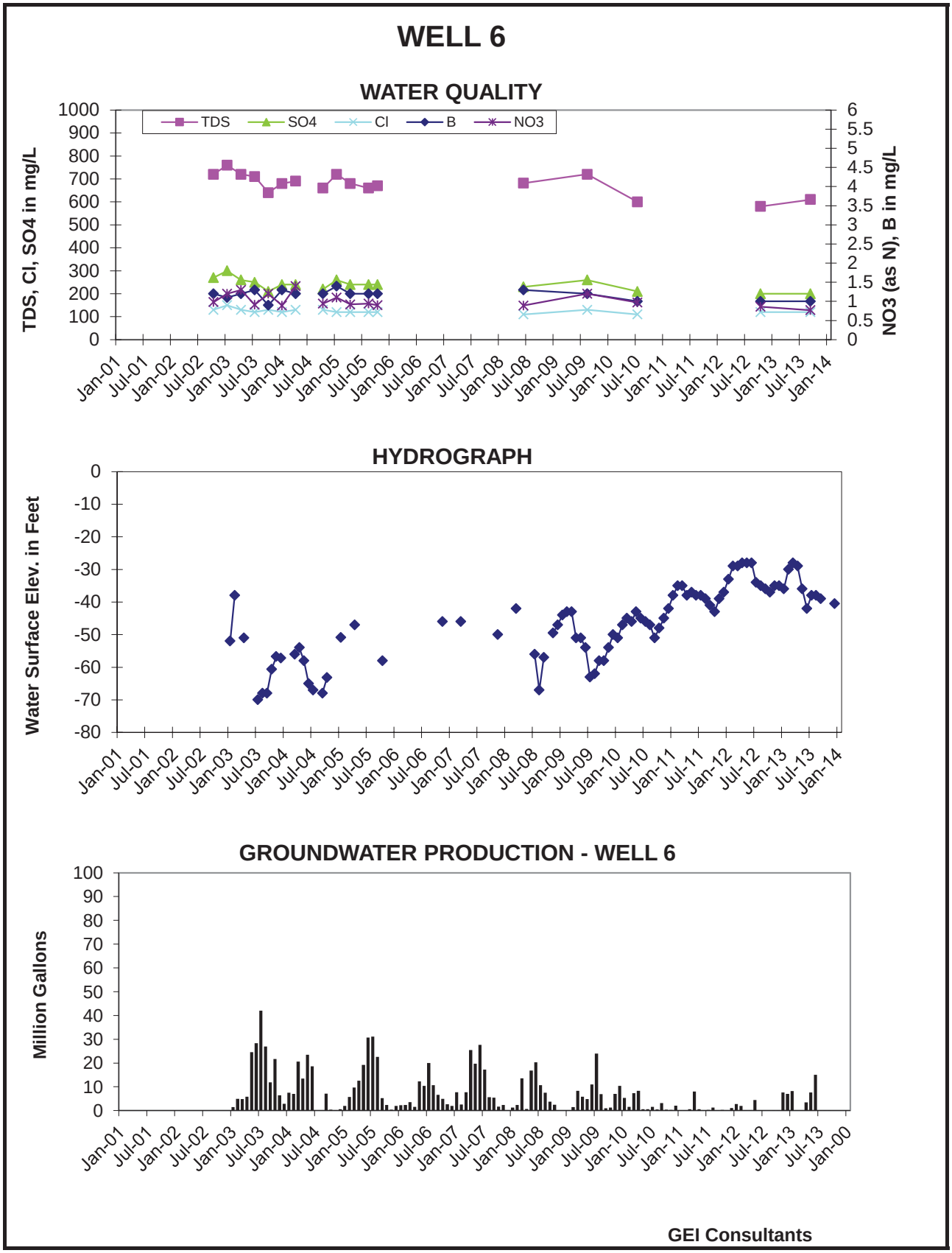
WELL 6
WATER QUALITY
TDS
SO4
Cl
B
NO3
TDS, Cl, SO4 in mg/L
NO3 (as N), B in mg/L
HYDROGRAPH
Water Surface Elev. in Feet
GROUNDWATER PRODUCTION - WELL 6
Million Gallons
GEI Consultants

FIGURE 17

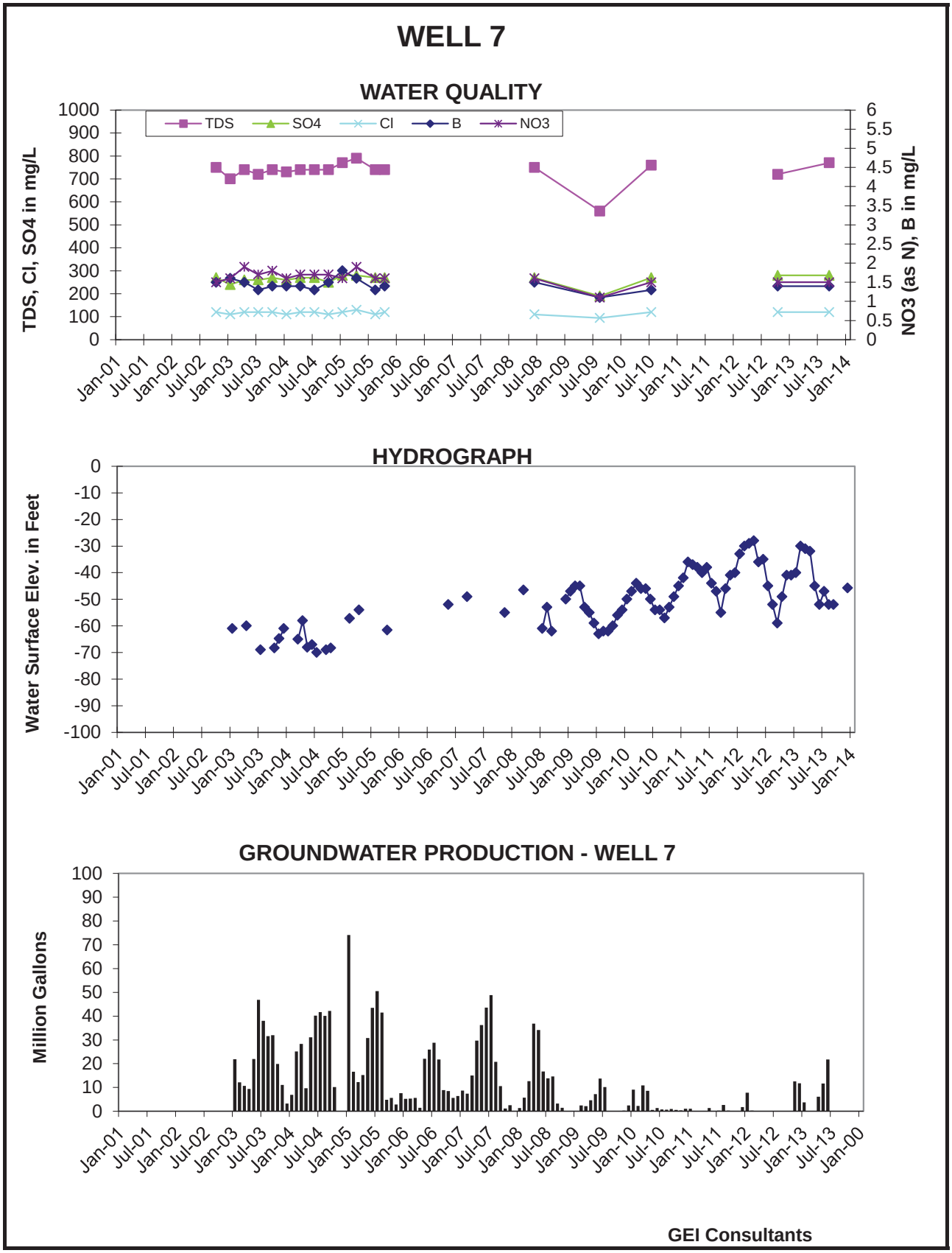
WELL 7
WATER QUALITY
TDS
SO4
Cl
B
NO3
TDS, Cl, SO4 in mg/L
NO3 (as N), B in mg/L
HYDROGRAPH
Water Surface Elev. in Feet
GROUNDWATER PRODUCTION - WELL 7
Million Gallons
GEI Consultants

FIGURE 18

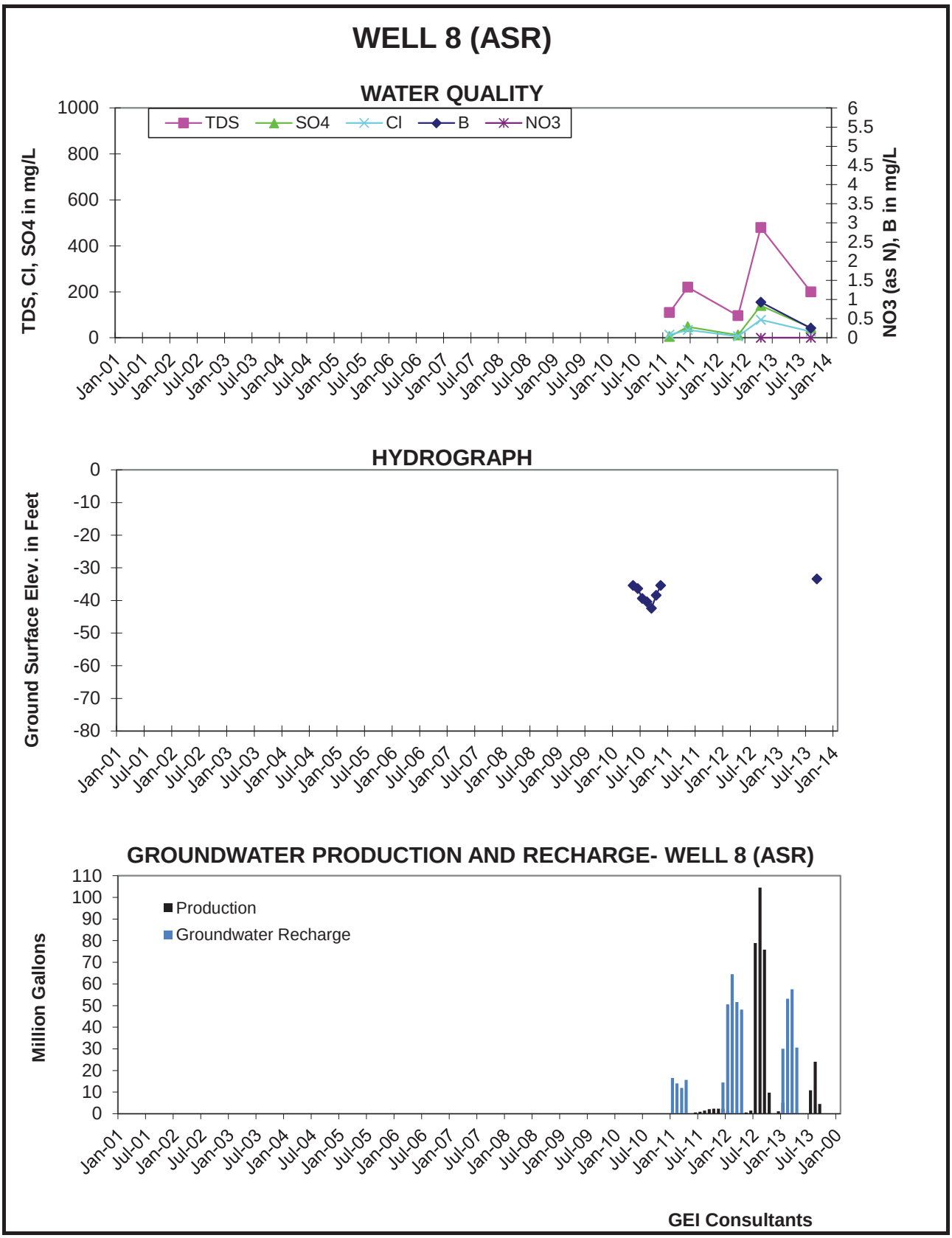
WELL 8 (ASR)
WATER QUALITY
TDS
SO4
Cl
B
NO3
TDS, Cl, SO4 in mg/L
NO3 (as N), B in mg/L
HYDROGRAPH
Ground Surface Elev. in Feet
GROUNDWATER PRODUCTION AND RECHARGE- WELL 8 (ASR)
Production
Groundwater Recharge
Million Gallons
GEI Consultants

FIGURE 19

MW-1A

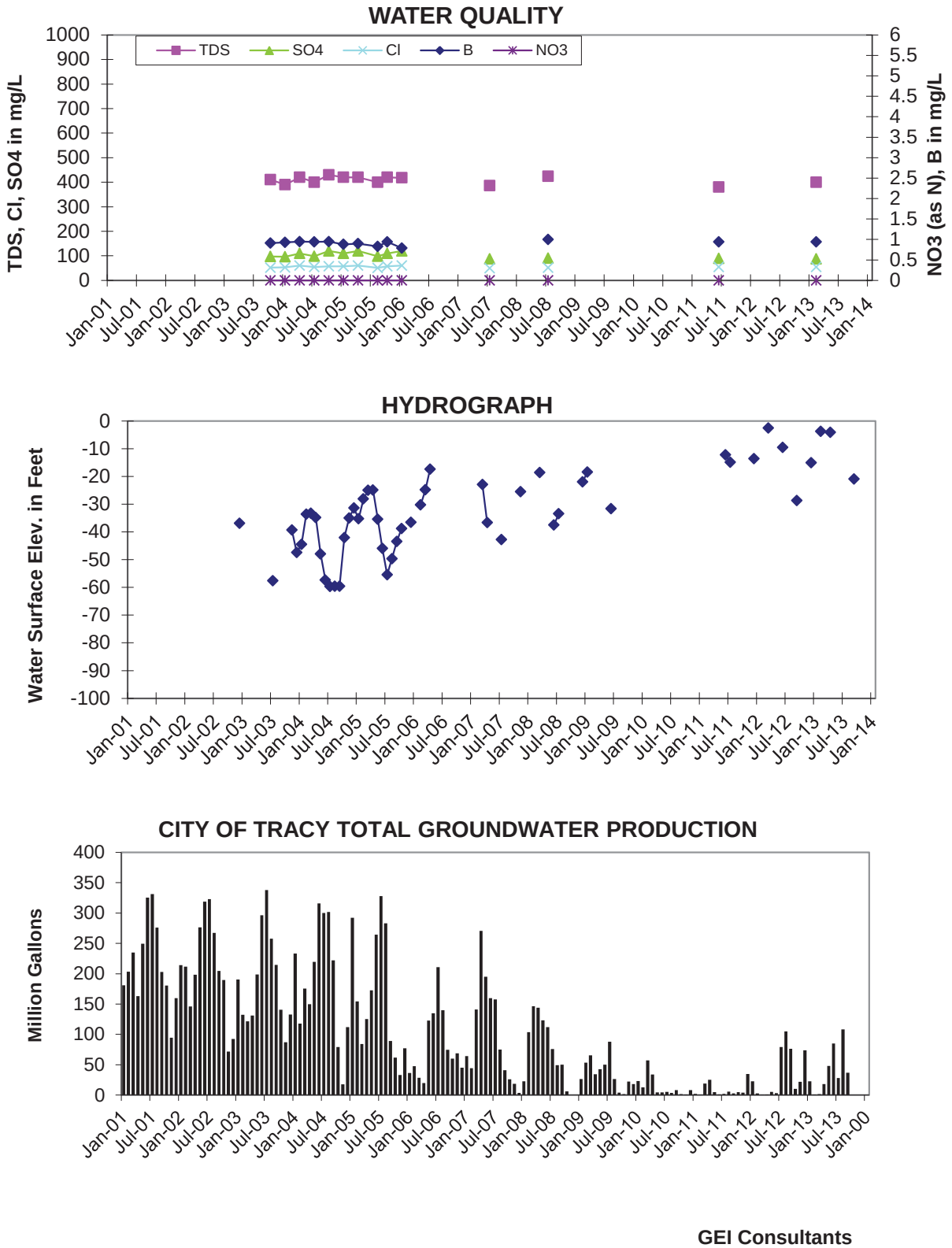

FIGURE 20

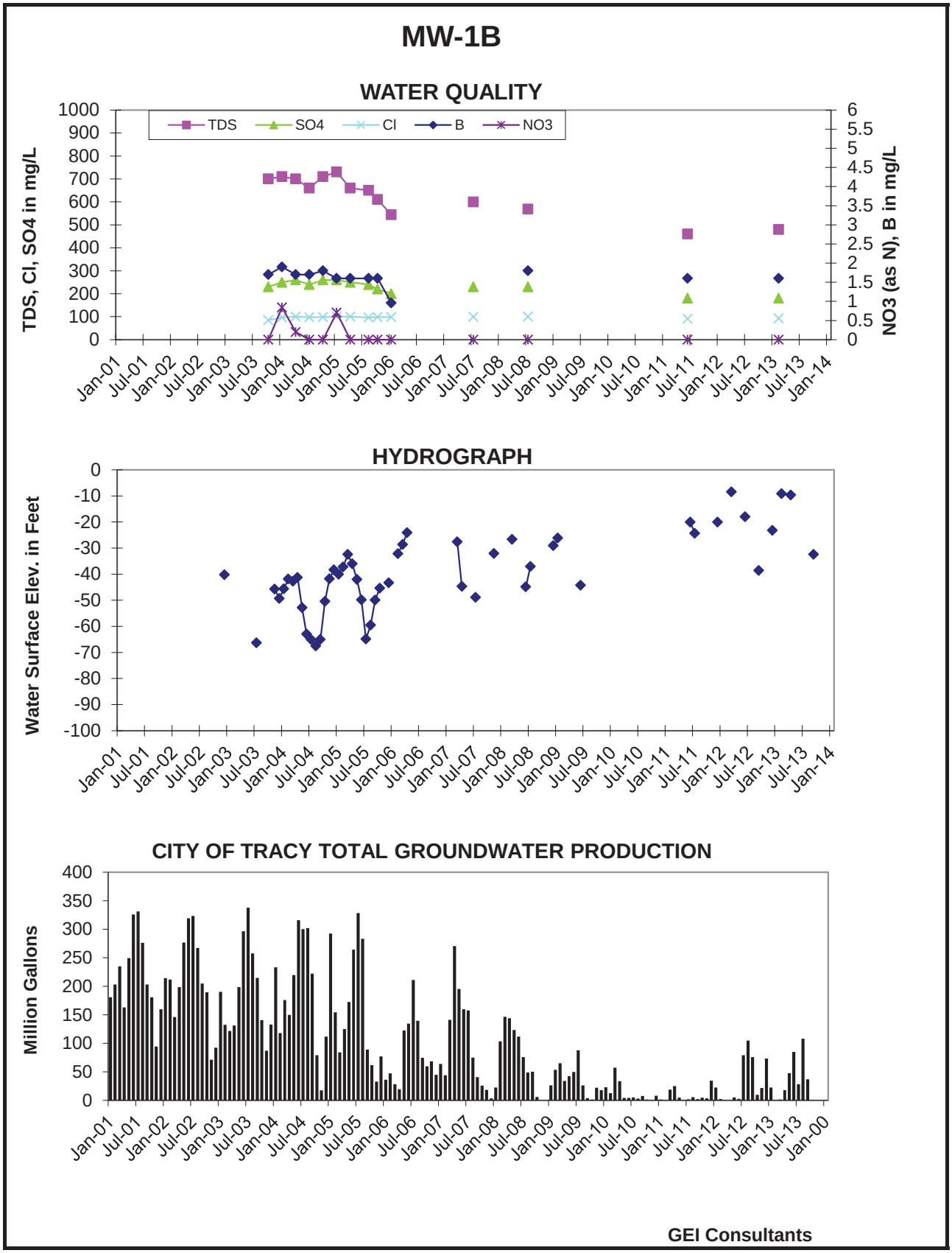
MW-1B
WATER QUALITY
TDS
SO4
Cl
B
NO3
TDS, Cl, SO4 in mg/L
NO3 (as N), B in mg/L
HYDROGRAPH
Water Surface Elev. in Feet
CITY OF TRACY TOTAL GROUNDWATER PRODUCTION
Million Gallons
GEI Consultants

FIGURE 21

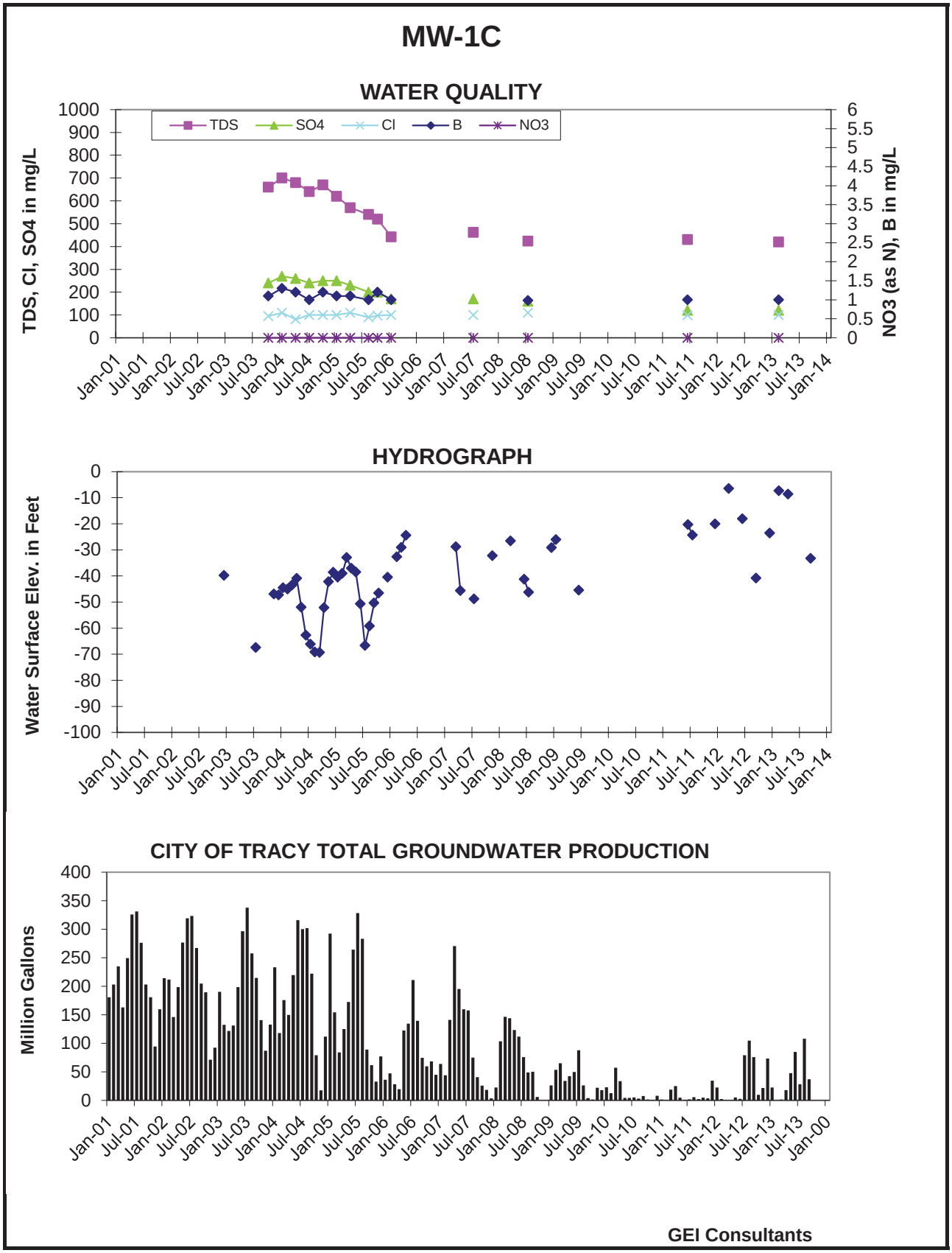
MW-1C
WATER QUALITY
TDS
SO4
Cl
B
NO3
TDS, Cl, SO4 in mg/L
NO3 (as N), B in mg/L
HYDROGRAPH
Water Surface Elev. in Feet
CITY OF TRACY TOTAL GROUNDWATER PRODUCTION
Million Gallons
GEI Consultants

FIGURE 22

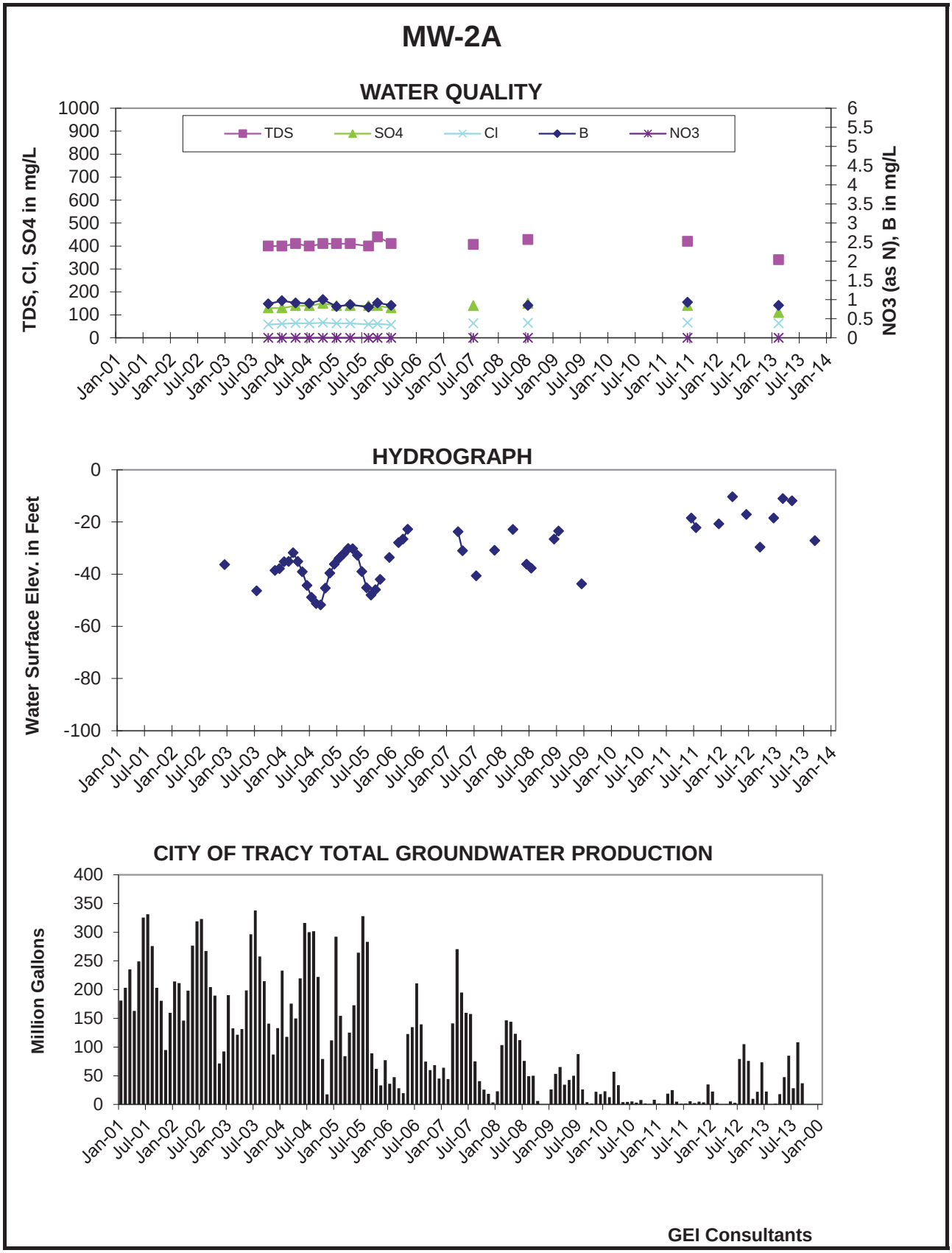
MW-2A
WATER QUALITY
TDS
SO4
Cl
B
NO3
TDS, Cl, SO4 in mg/L
NO3 (as N), B in mg/L
HYDROGRAPH
Water Surface Elev. in Feet
CITY OF TRACY TOTAL GROUNDWATER PRODUCTION
Million Gallons
GEI Consultants

FIGURE 23

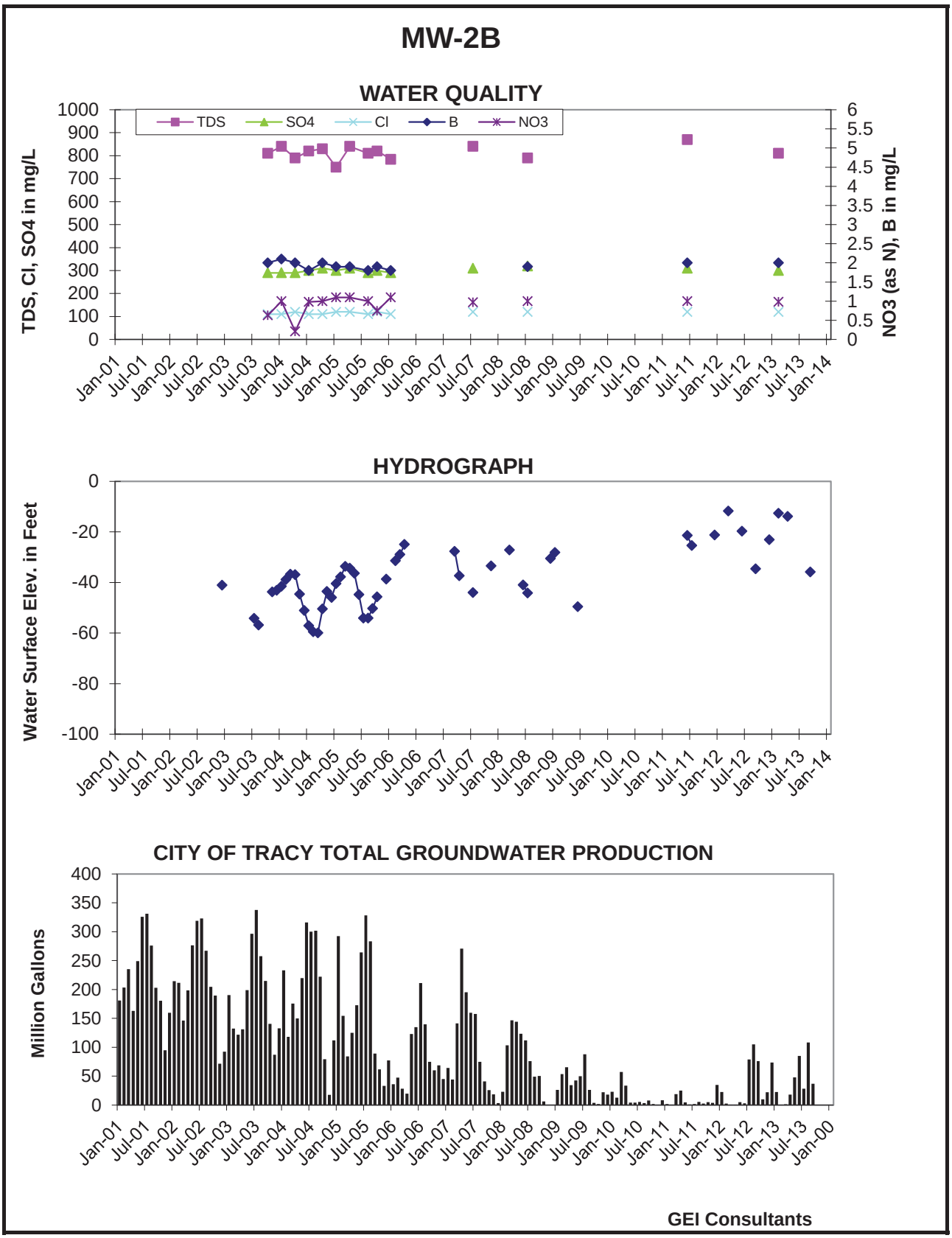
MW-2B
WATER QUALITY
TDS
SO4
Cl
B
NO3
TDS, Cl, SO4 in mg/L
NO3 (as N), B in mg/L
HYDROGRAPH
Water Surface Elev. in Feet
CITY OF TRACY TOTAL GROUNDWATER PRODUCTION
Million Gallons
GEI Consultants

FIGURE 24

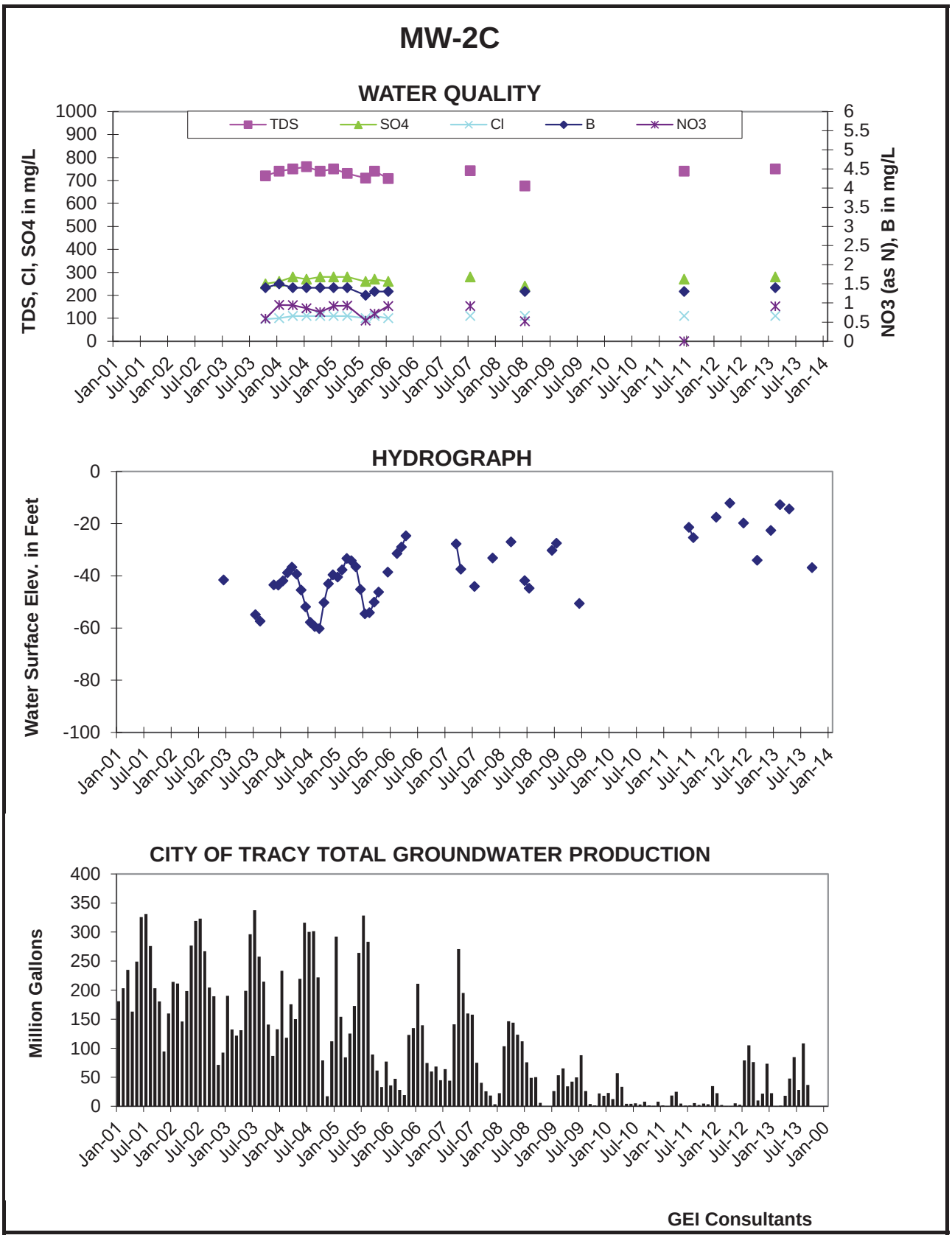
MW-2C
WATER QUALITY
TDS
SO4
Cl
B
NO3
TDS, Cl, SO4 in mg/L
NO3 (as N), B in mg/L
HYDROGRAPH
Water Surface Elev. in Feet
CITY OF TRACY TOTAL GROUNDWATER PRODUCTION
Million Gallons
GEI Consultants

FIGURE 25

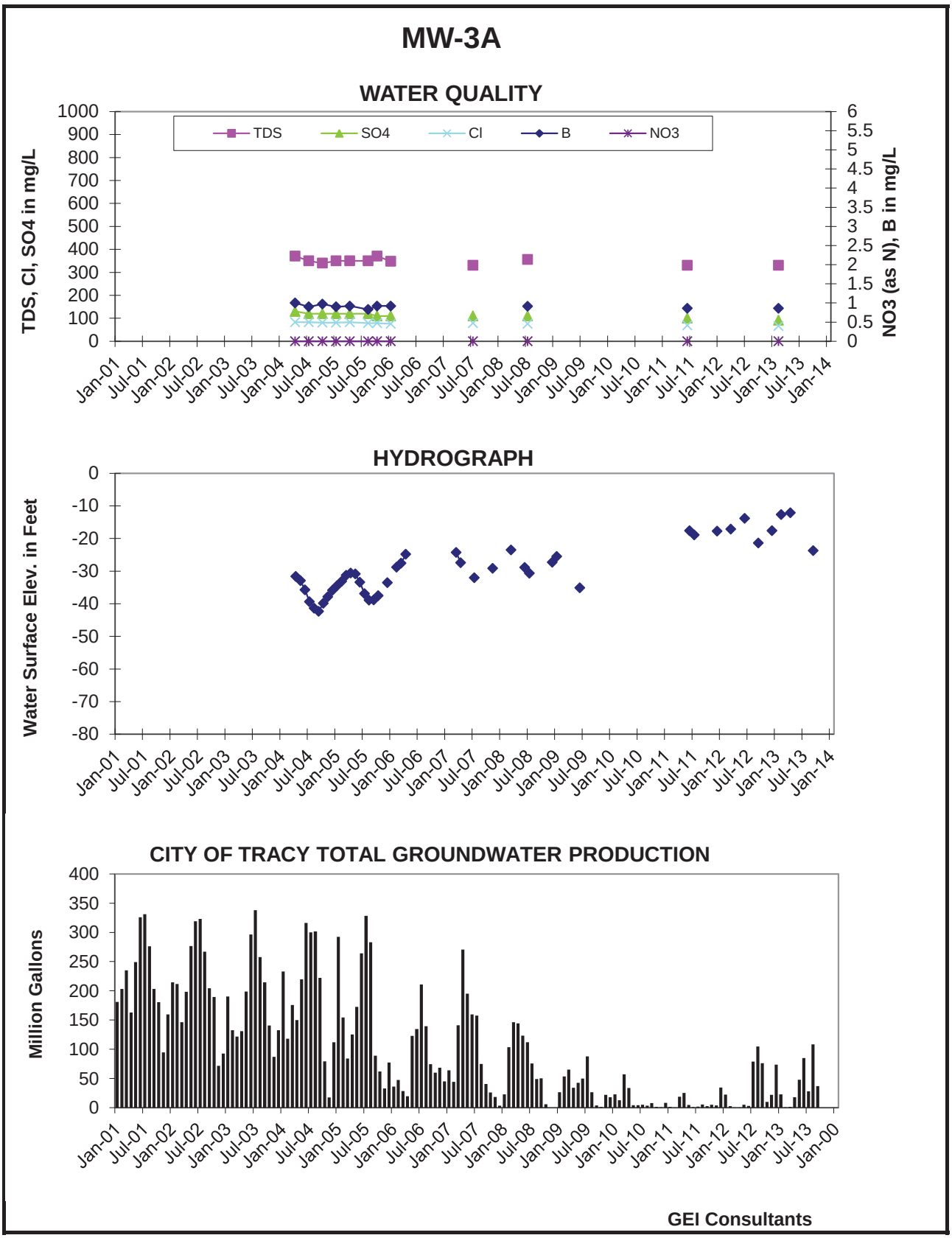
MW-3A
WATER QUALITY
TDS
SO4
Cl
B
NO3
TDS, Cl, SO4 in mg/L
NO3 (as N), B in mg/L
HYDROGRAPH
Water Surface Elev. in Feet
CITY OF TRACY TOTAL GROUNDWATER PRODUCTION
Million Gallons
GEI Consultants

FIGURE 26

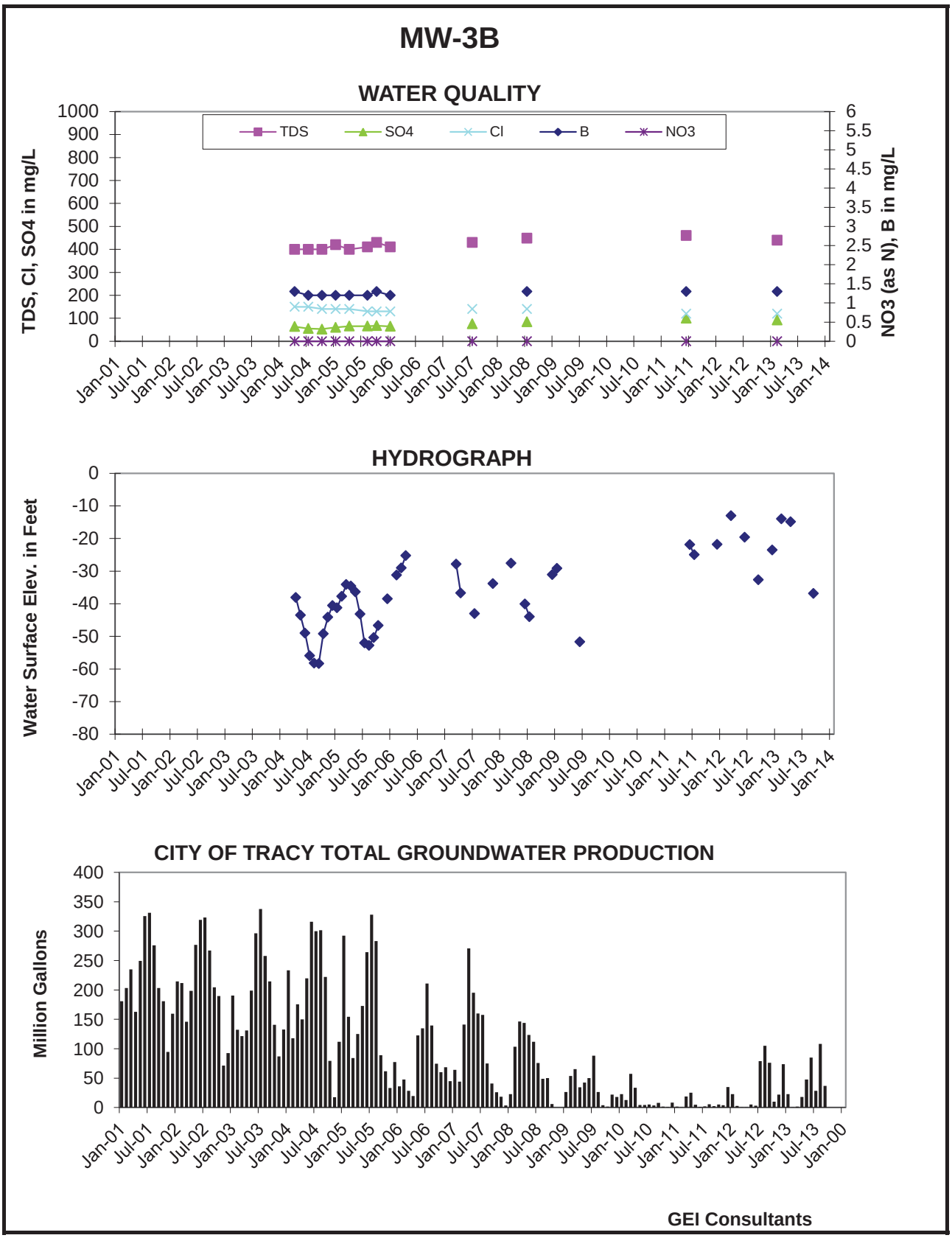
MW-3B
WATER QUALITY
TDS
SO4
Cl
B
NO3
TDS, Cl, SO4 in mg/L
NO3 (as N), B in mg/L
HYDROGRAPH
Water Surface Elev. in Feet
CITY OF TRACY TOTAL GROUNDWATER PRODUCTION
Million Gallons
GEI Consultants

FIGURE 27

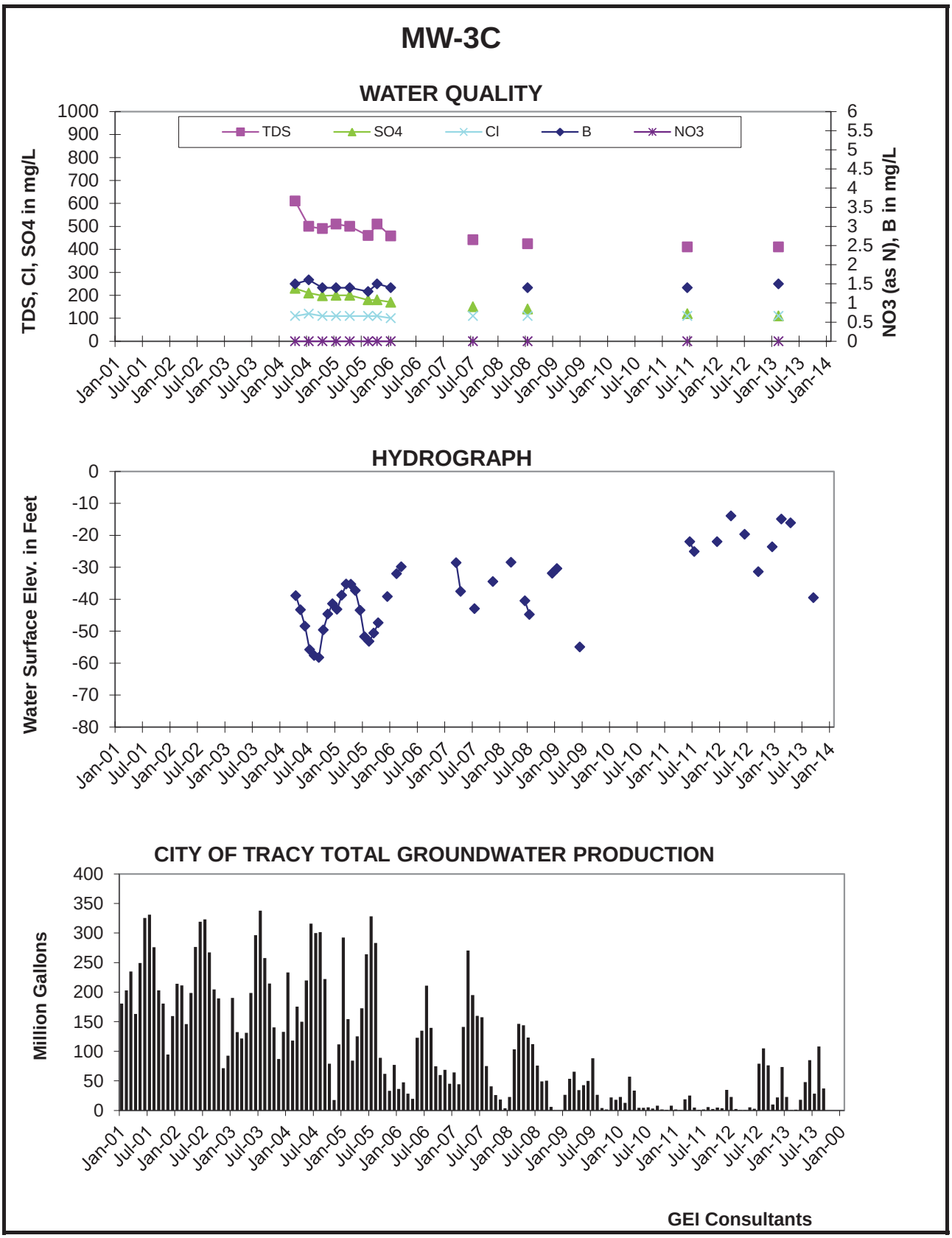
MW-3C
WATER QUALITY
TDS
SO4
Cl
B
NO3
TDS, Cl, SO4 in mg/L
NO3 (as N), B in mg/L
HYDROGRAPH
Water Surface Elev. in Feet
CITY OF TRACY TOTAL GROUNDWATER PRODUCTION
Million Gallons
GEI Consultants

FIGURE 28

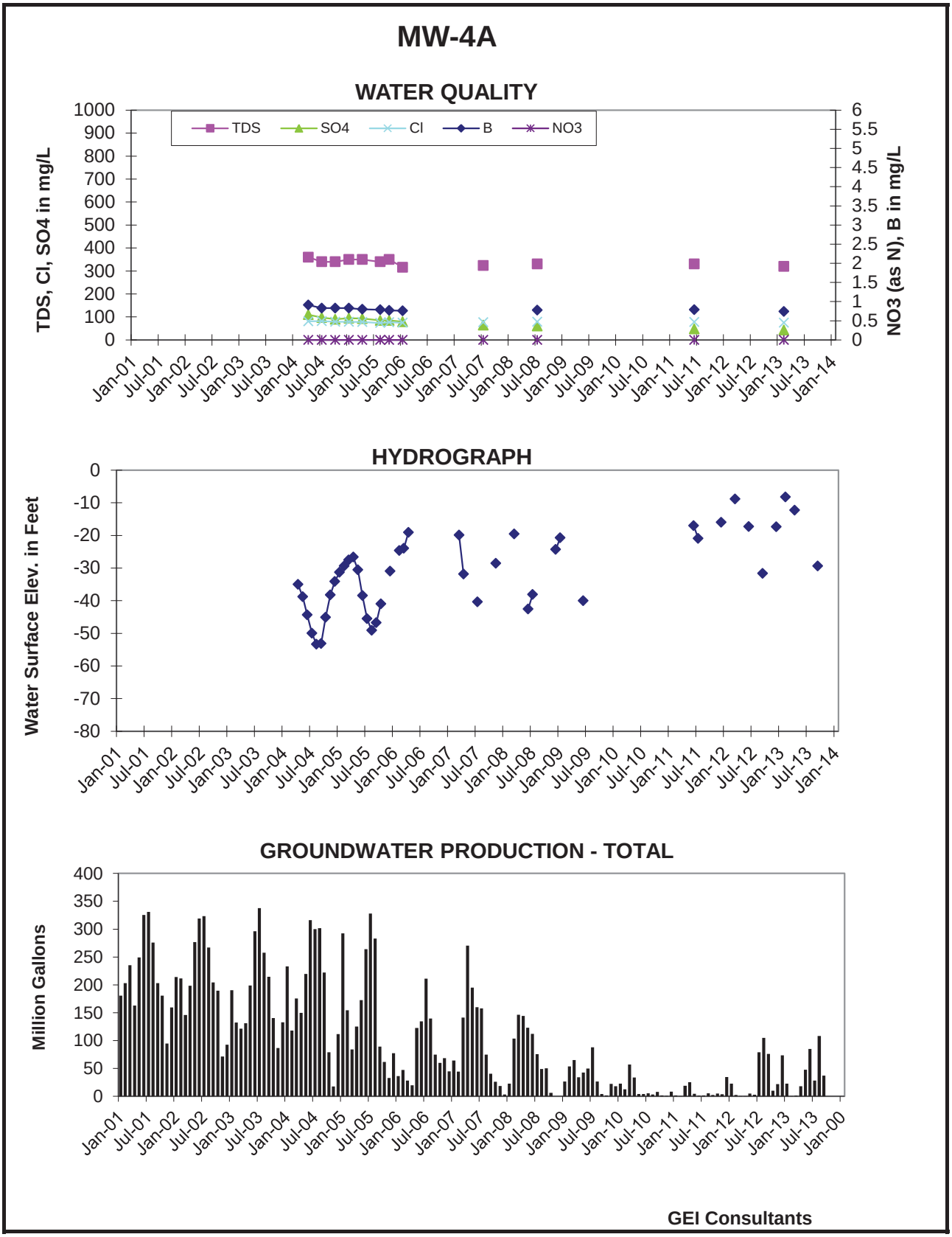
MW-4A
WATER QUALITY
TDS
SO4
Cl
B
NO3
TDS, Cl, SO4 in mg/L
NO3 (as N), B in mg/L
HYDROGRAPH
Water Surface Elev. in Feet
GROUNDWATER PRODUCTION - TOTAL
Million Gallons
GEI Consultants

FIGURE 29

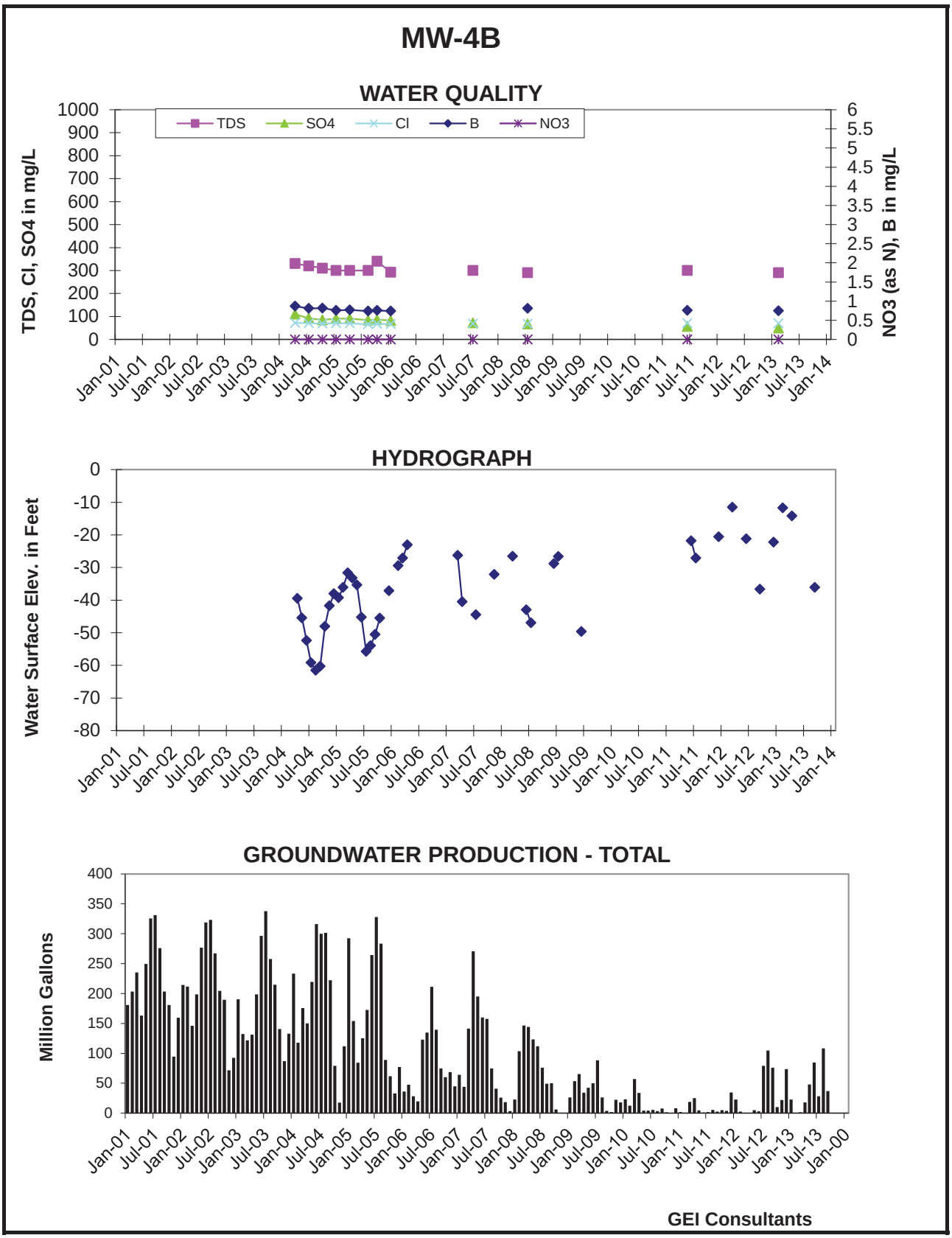
MW-4B
WATER QUALITY
TDS
SO4
Cl
B
NO3
TDS, Cl, SO4 in mg/L
NO3 (as N), B in mg/L
HYDROGRAPH
Water Surface Elev. in Feet
GROUNDWATER PRODUCTION - TOTAL
Million Gallons
GEI Consultants

FIGURE 30

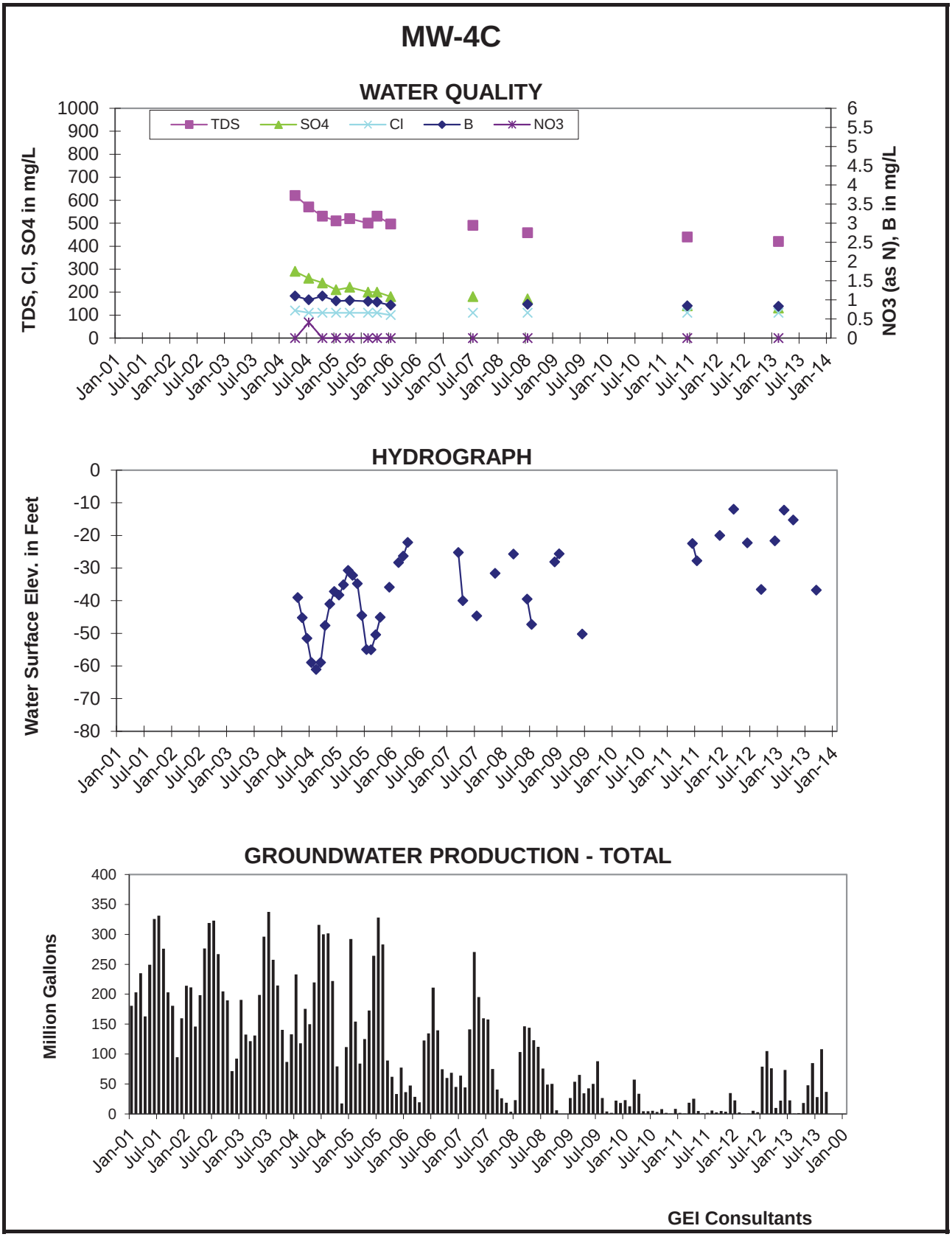
MW-4C
WATER QUALITY
TDS
SO4
Cl
B
NO3
TDS, Cl, SO4 in mg/L
NO3 (as N), B in mg/L
HYDROGRAPH
Water Surface Elev. in Feet
GROUNDWATER PRODUCTION - TOTAL
Million Gallons
GEI Consultants

FIGURE 31

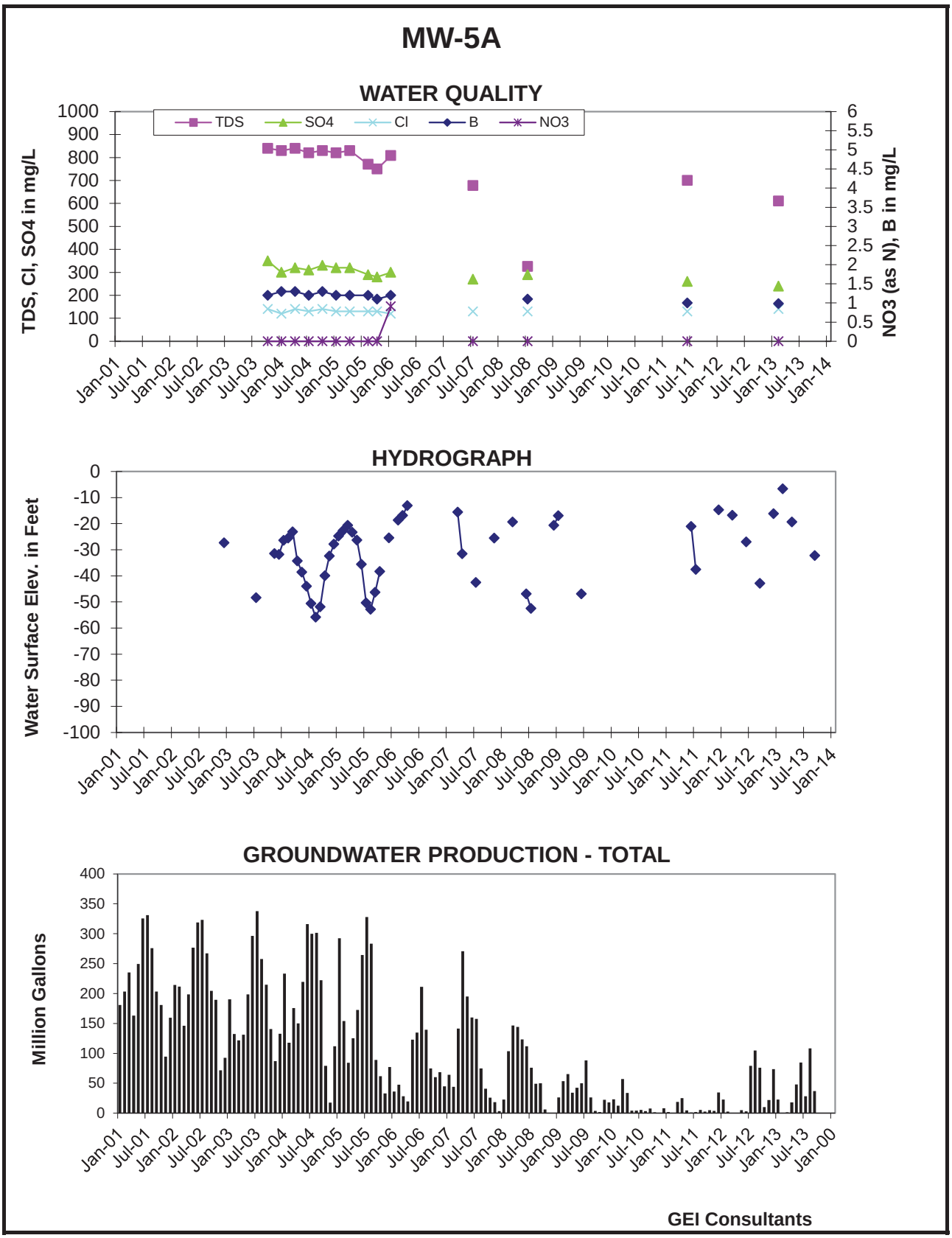
MW-5A
WATER QUALITY
TDS
SO4
Cl
B
NO3
TDS, Cl, SO4 in mg/L
NO3 (as N), B in mg/L
HYDROGRAPH
Water Surface Elev. in Feet
GROUNDWATER PRODUCTION - TOTAL
Million Gallons
GEI Consultants

FIGURE 32

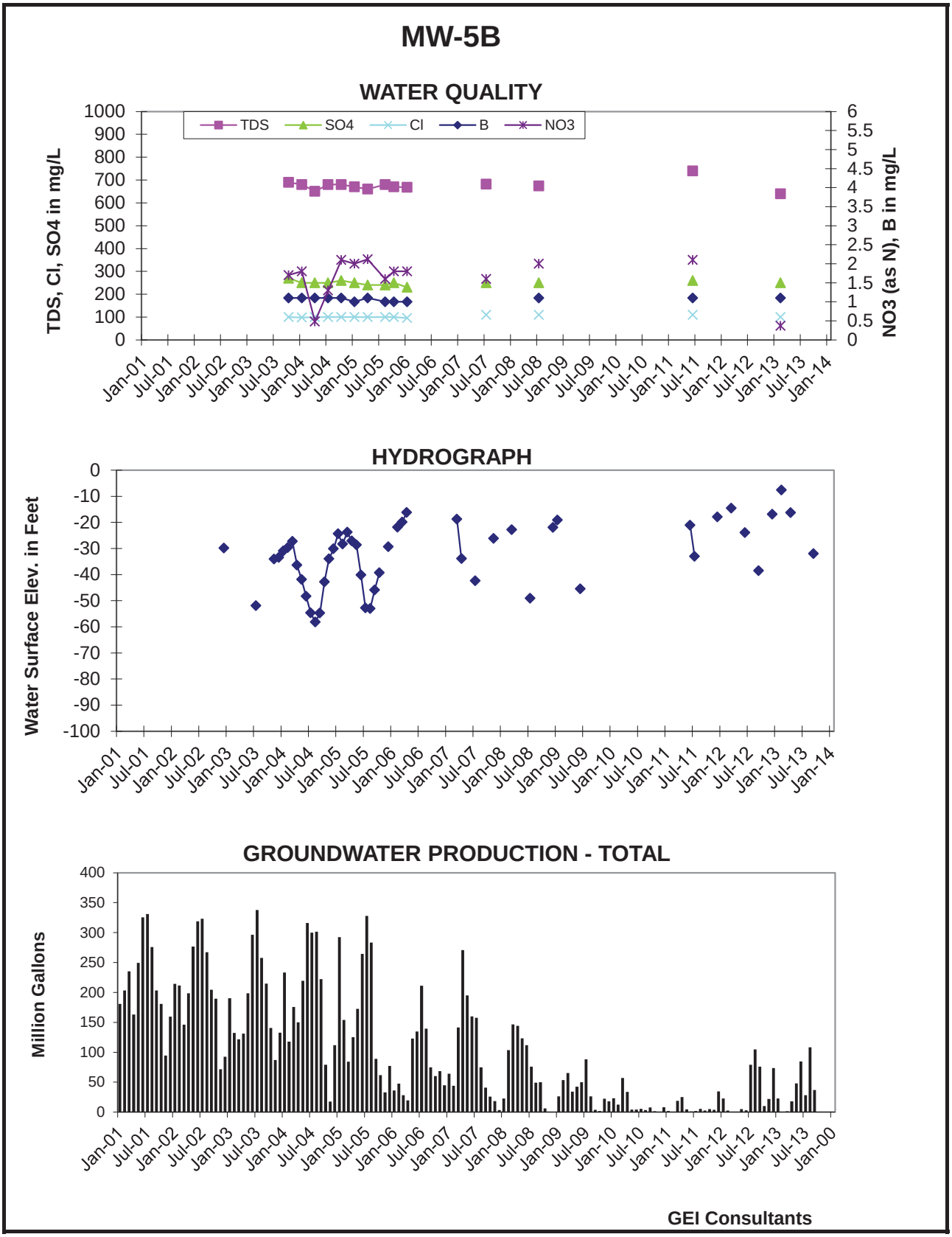
MW-5B
WATER QUALITY
TDS
SO4
Cl
B
NO3
TDS, Cl, SO4 in mg/L
NO3 (as N), B in mg/L
HYDROGRAPH
Water Surface Elev. in Feet
GROUNDWATER PRODUCTION - TOTAL
Million Gallons
GEI Consultants

FIGURE 33

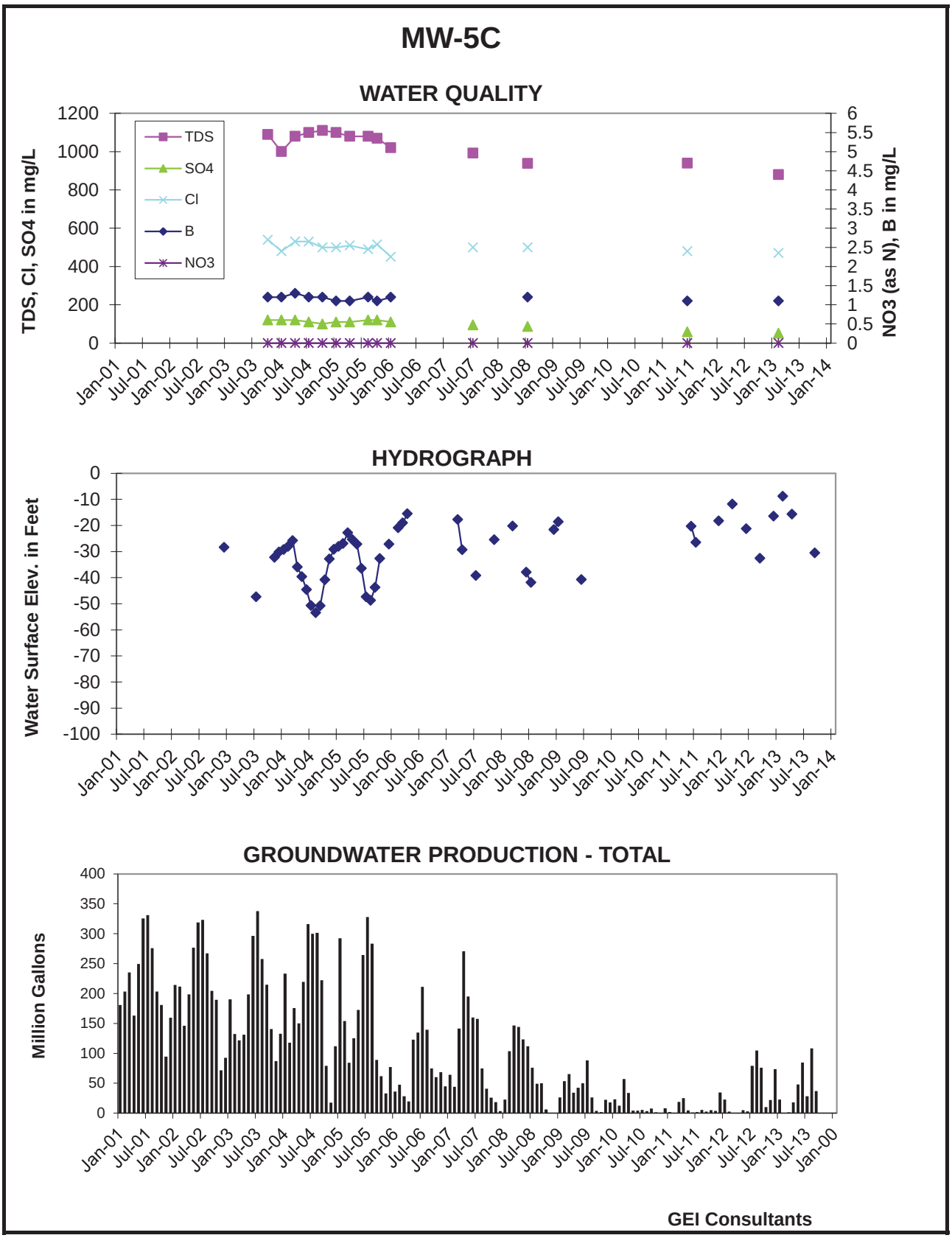
MW-5C
WATER QUALITY
TDS, Cl, SO4 in mg/L
NO3 (as N), B in mg/L
TDS
SO4
Cl
B
NO3
HYDROGRAPH
Water Surface Elev. in Feet
GROUNDWATER PRODUCTION - TOTAL
Million Gallons
GEI Consultants

FIGURE 34

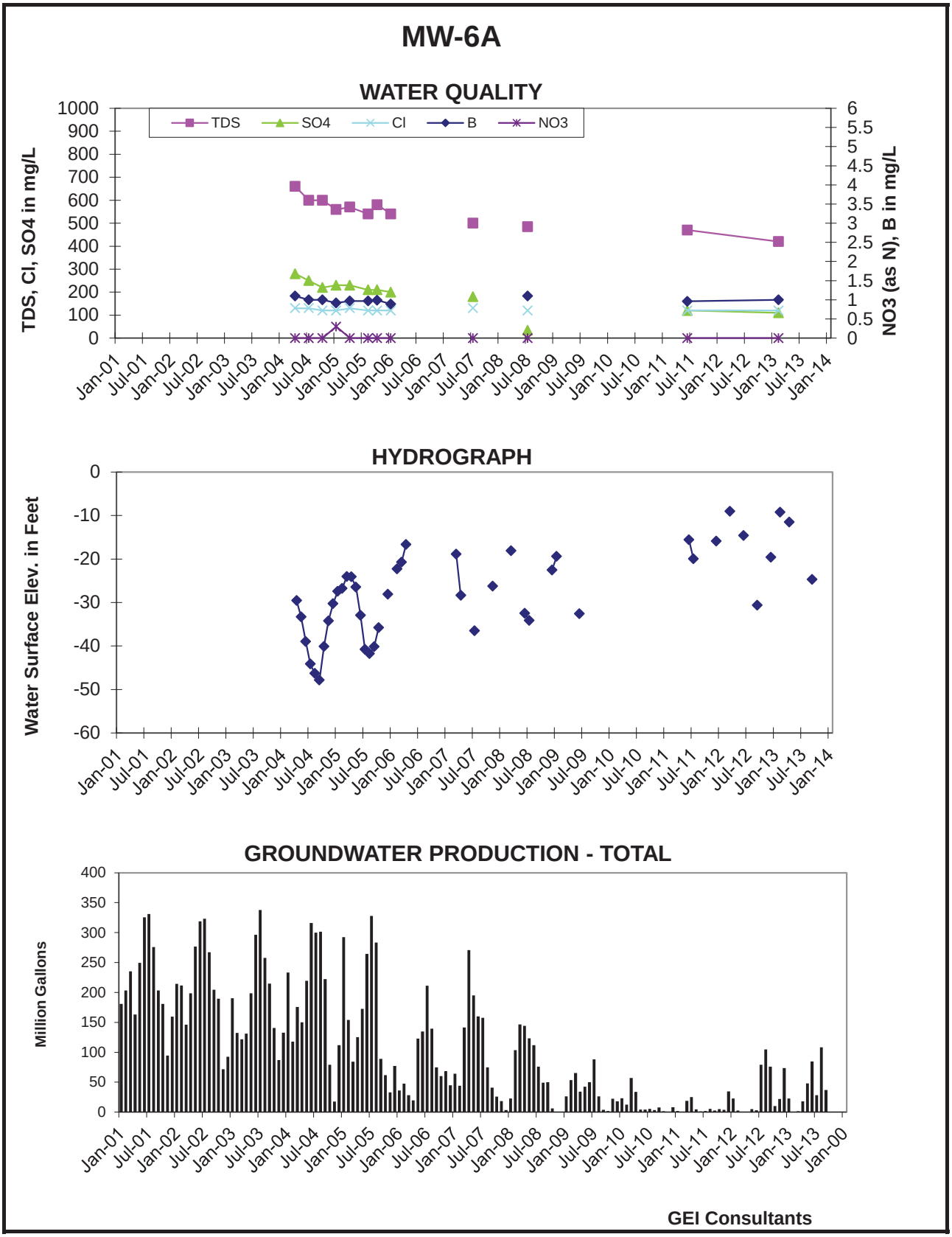
MW-6A
WATER QUALITY
TDS
SO4
Cl
B
NO3
TDS, Cl, SO4 in mg/L
NO3 (as N), B in mg/L
HYDROGRAPH
Water Surface Elev. in Feet
GROUNDWATER PRODUCTION - TOTAL
Million Gallons
GEI Consultants

FIGURE 35

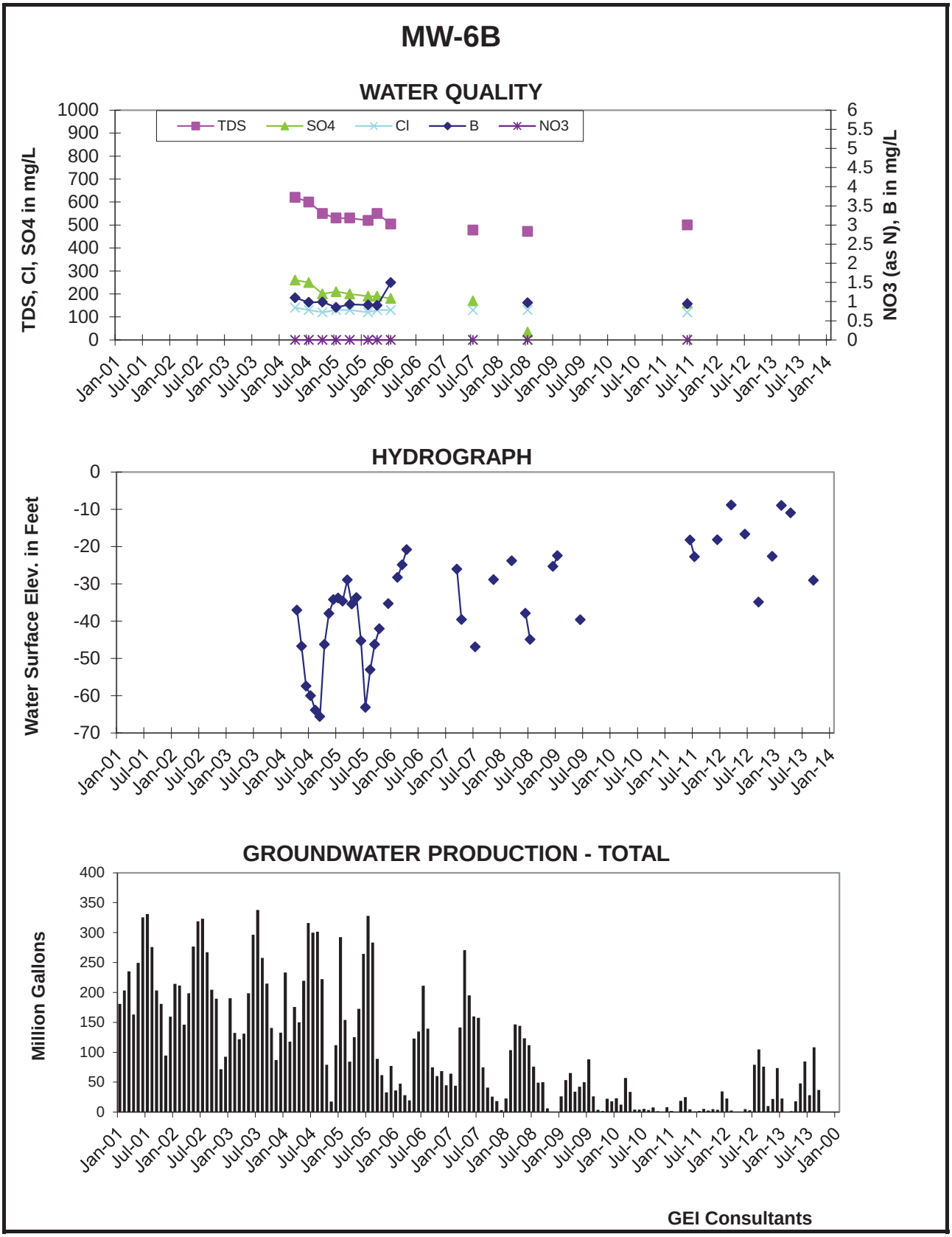
MW-6B
WATER QUALITY
TDS
SO4
Cl
B
NO3
TDS, Cl, SO4 in mg/L
NO3 (as N), B in mg/L
HYDROGRAPH
Water Surface Elev. in Feet
GROUNDWATER PRODUCTION - TOTAL
Million Gallons
GEI Consultants

FIGURE 36

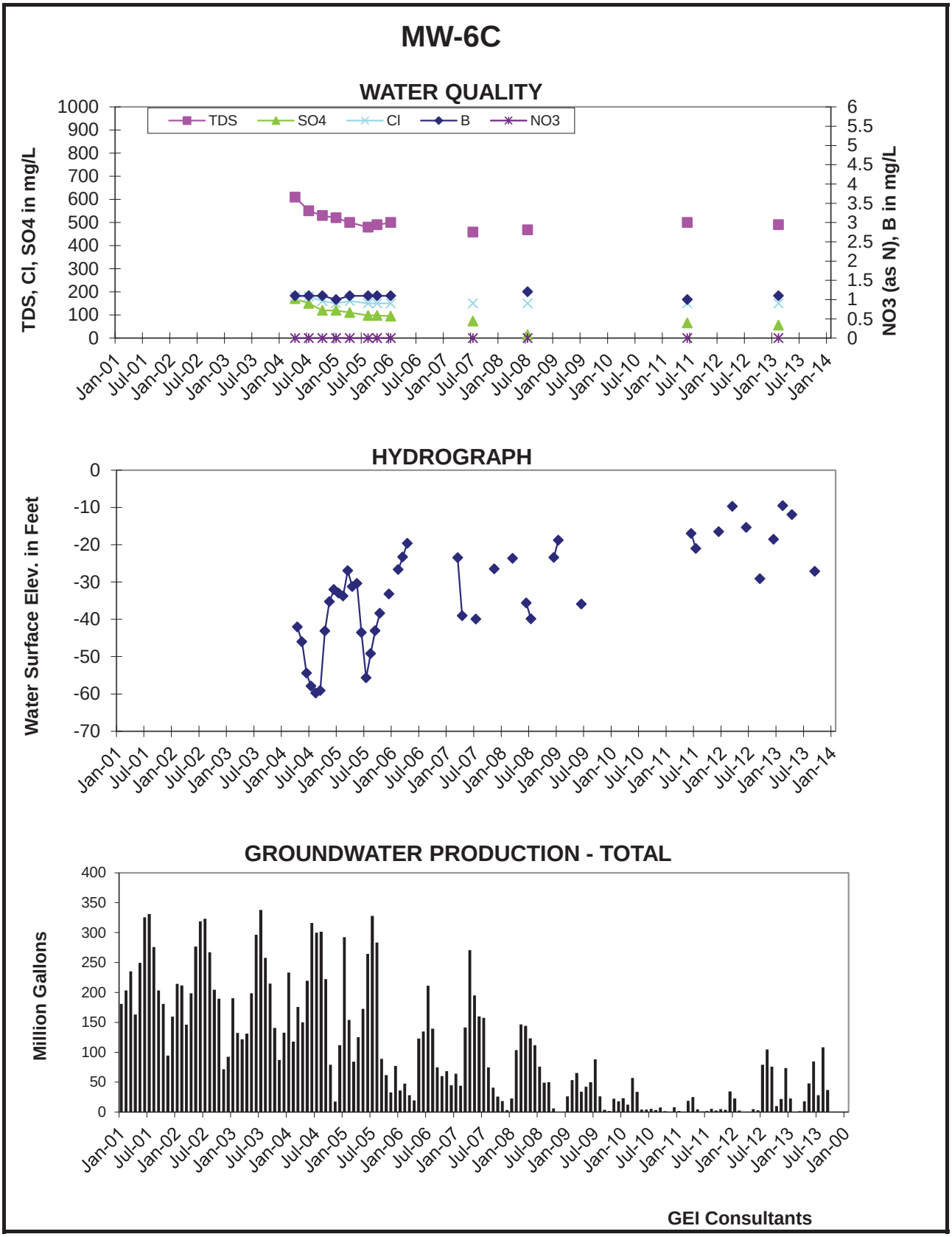
MW-6C
WATER QUALITY
TDS
SO4
Cl
B
NO3
TDS, Cl, SO4 in mg/L
NO3 (as N), B in mg/L
HYDROGRAPH
Water Surface Elev. in Feet
GROUNDWATER PRODUCTION - TOTAL
Million Gallons
GEI Consultants

FIGURE 37

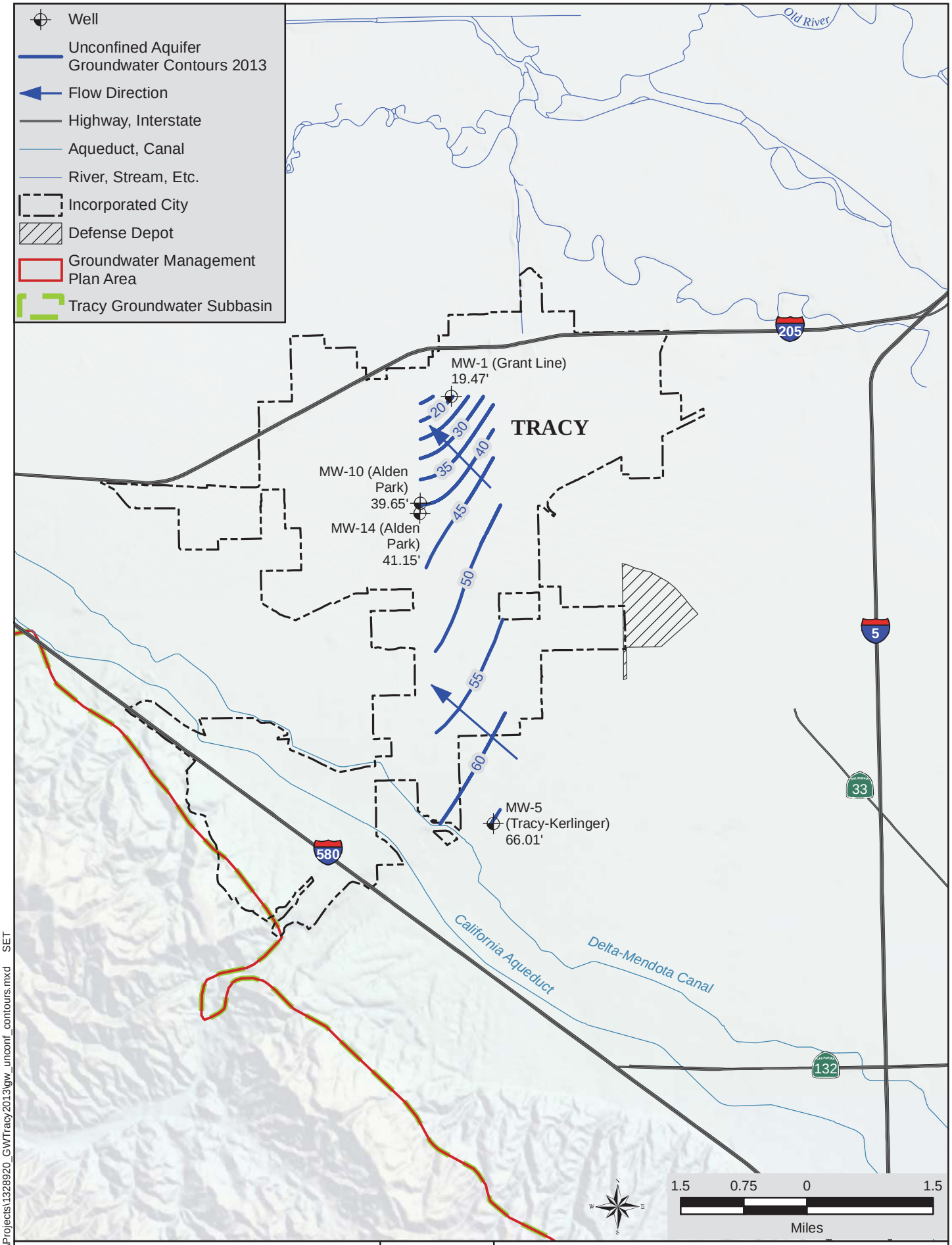

Summary of Groundwater Conditions
February 2013 through September 2013

City of Tracy
San Joaquin County, California

GEI Consultants

UNCONFINED AQUIFER GROUNDWATER CONTOURS, 2013

DECEMBER 2013

FIGURE 38

8Jan2014 Z:\Projects\1328920_GWTracy2013\gw_unconf_contours.mxd SET

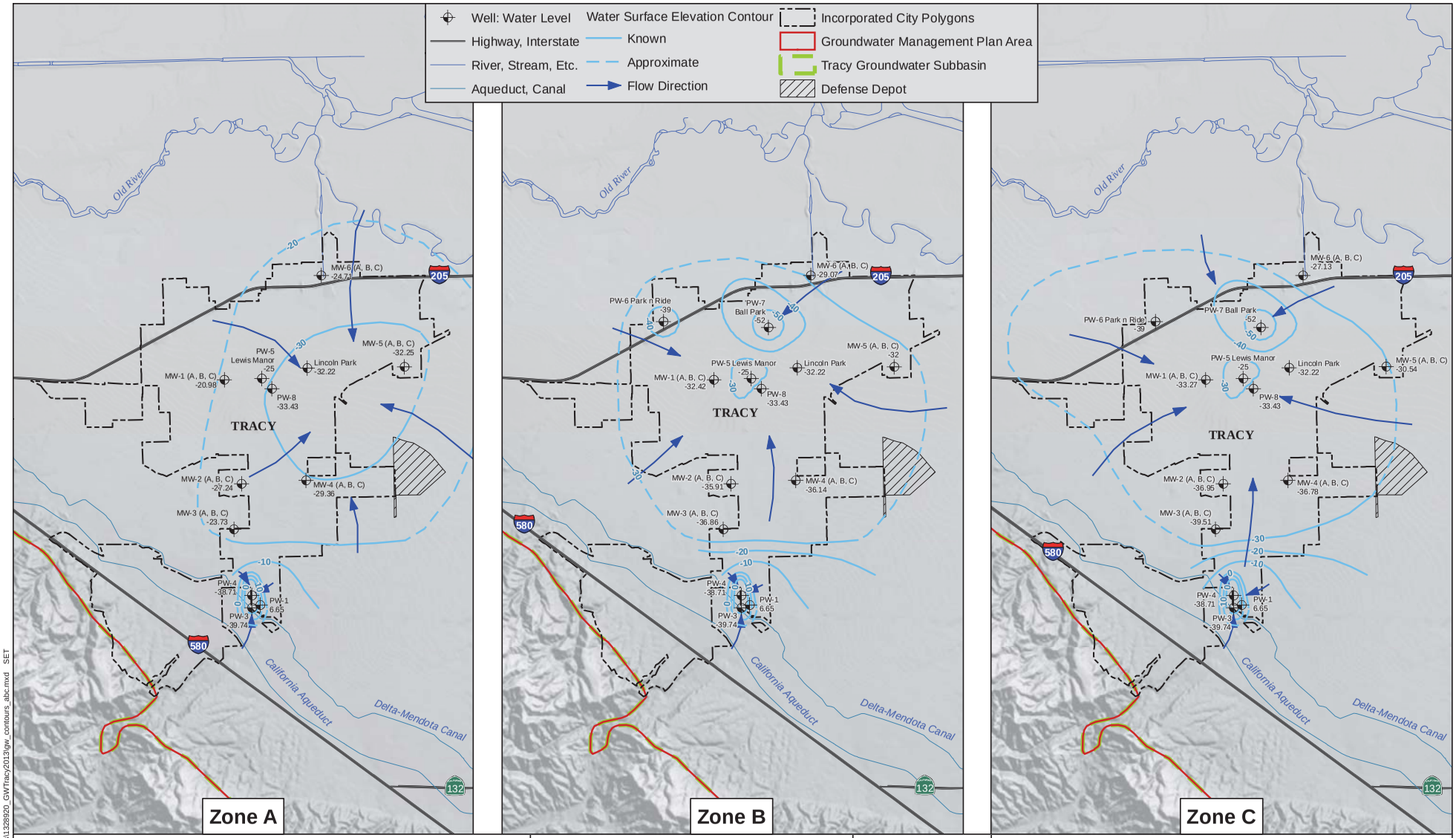

Summary of Groundwater Conditions
February 2013 through September 2013

City of Tracy
San Joaquin County, California

GEI Consultants

CONFINED AQUIFER
GROUNDWATER CONTOURS, SEPTEMBER 2013
ZONES A, B AND C

DECEMBER 2013

FIGURE 39

27-Dec-2013 Z:\Projects\1328920_GWTracy2013\gw_contours_abc.mxd SET

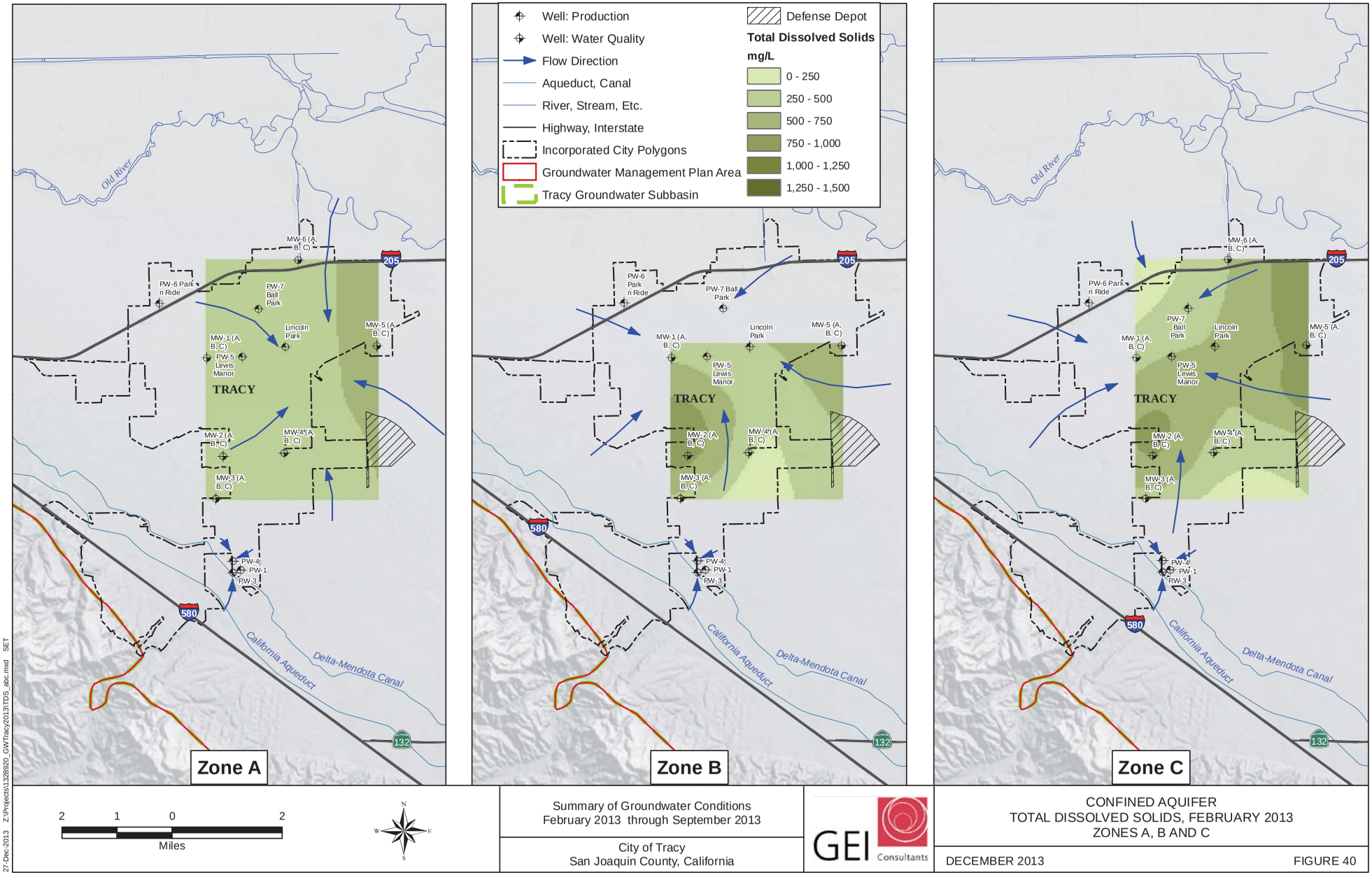

Summary of Groundwater Conditions
February 2013 through September 2013

City of Tracy
San Joaquin County, California

GEI Consultants

CONFINED AQUIFER
TOTAL DISSOLVED SOLIDS, FEBRUARY 2013
ZONES A, B AND C

DECEMBER 2013 FIGURE 40

27-Dec-2013 Z:\Projects\1328920_GWTracy2013\TDS_abc.mxd SET

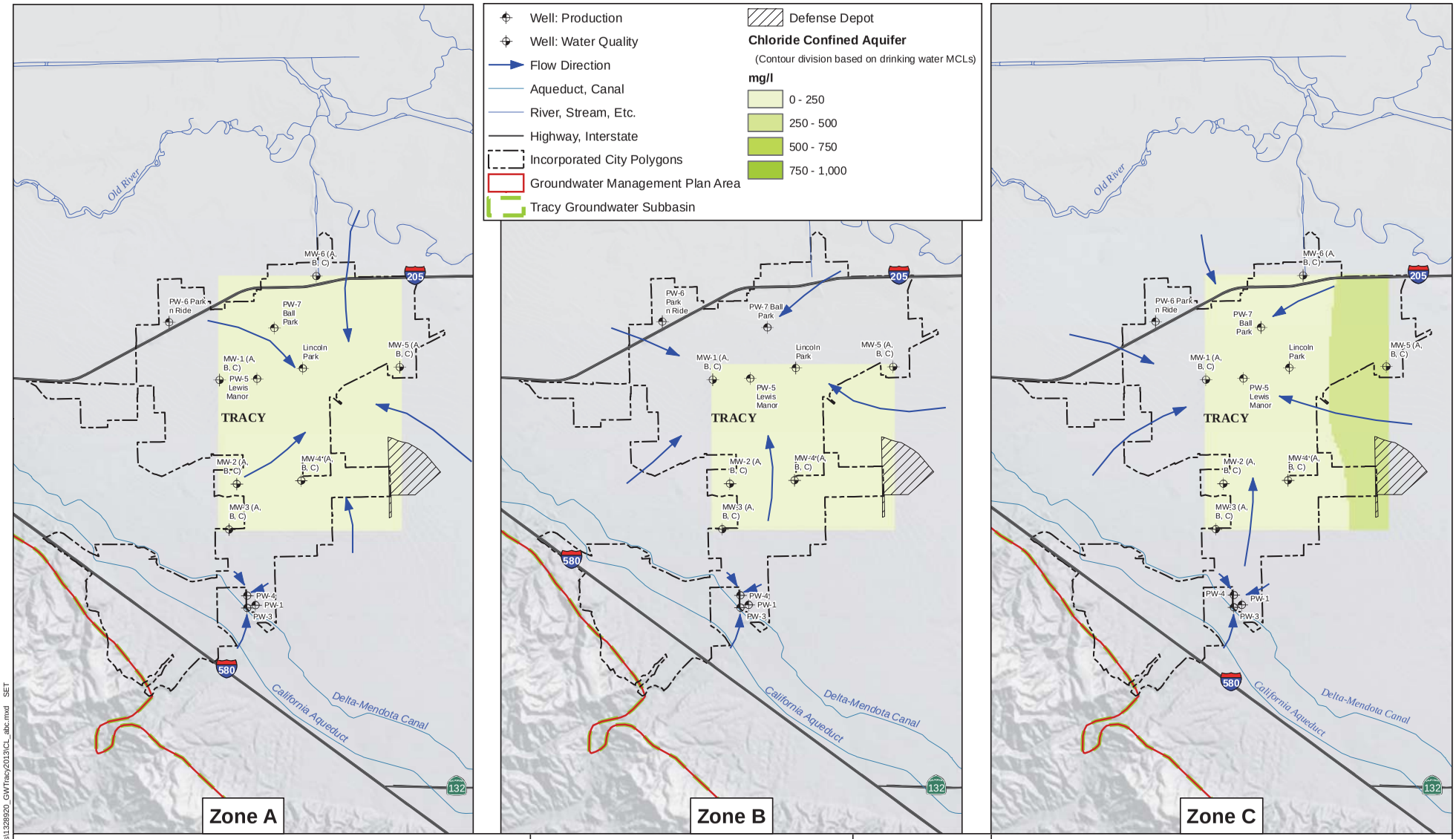

Summary of Groundwater Conditions
February 2013 through September 2013

City of Tracy
San Joaquin County, California

GEI Consultants

CONFINED AQUIFER
CHLORIDE, FEBRUARY 2013
ZONES A, B AND C

DECEMBER 2013 FIGURE 41

27-Dec-2013 Z:\Projects\1328920_GWTracy2013\CL_abc.mxd SET

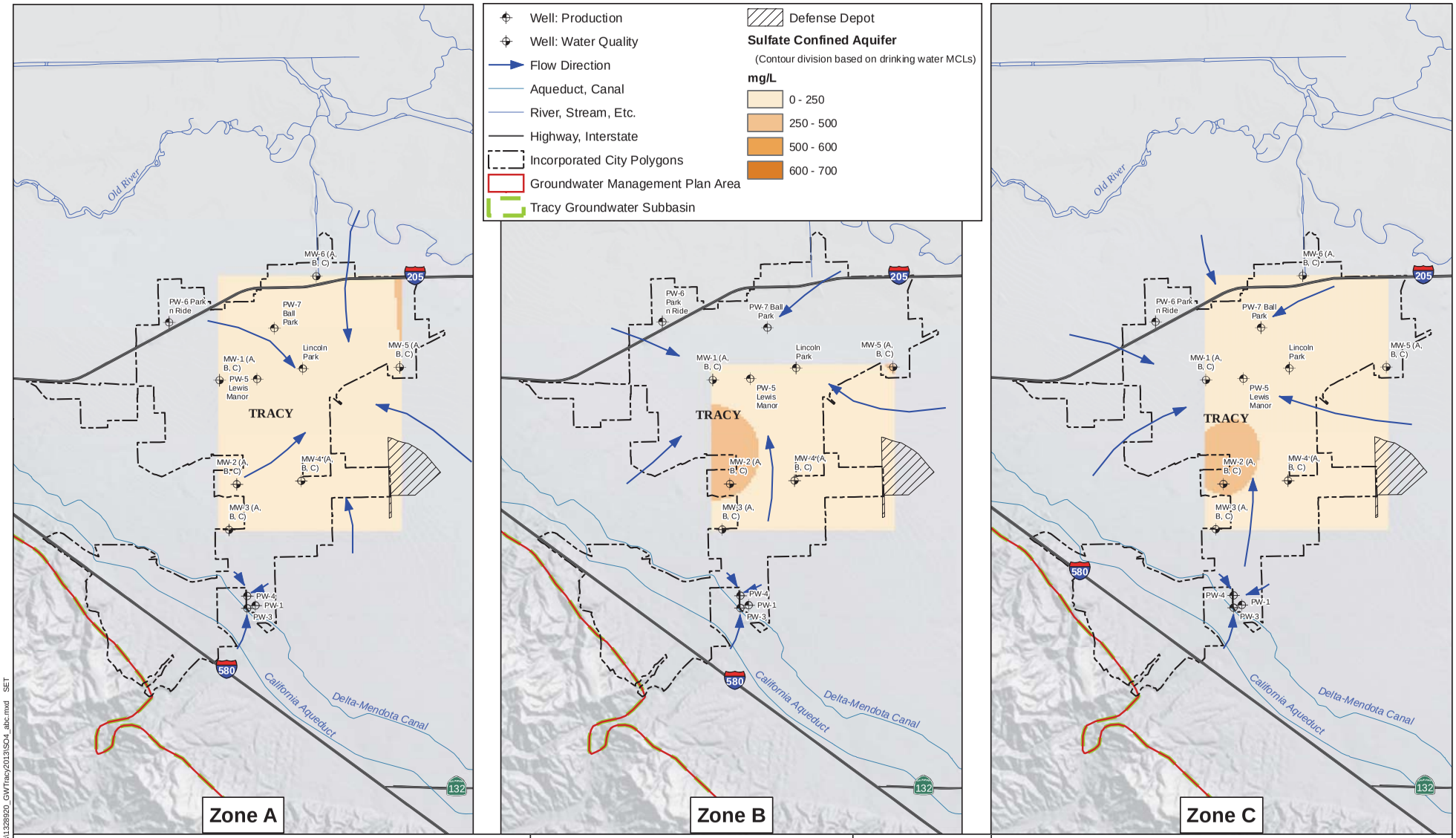

Summary of Groundwater Conditions
February 2013 through September 2013

City of Tracy
San Joaquin County, California

GEI Consultants

CONFINED AQUIFER
SULFATE, FEBRUARY 2013
ZONES A, B AND C

DECEMBER 2013

FIGURE 42

27-Dec-2013 Z:\Projects\1328920_GWTracy2013\SO4_abc.mxd SET

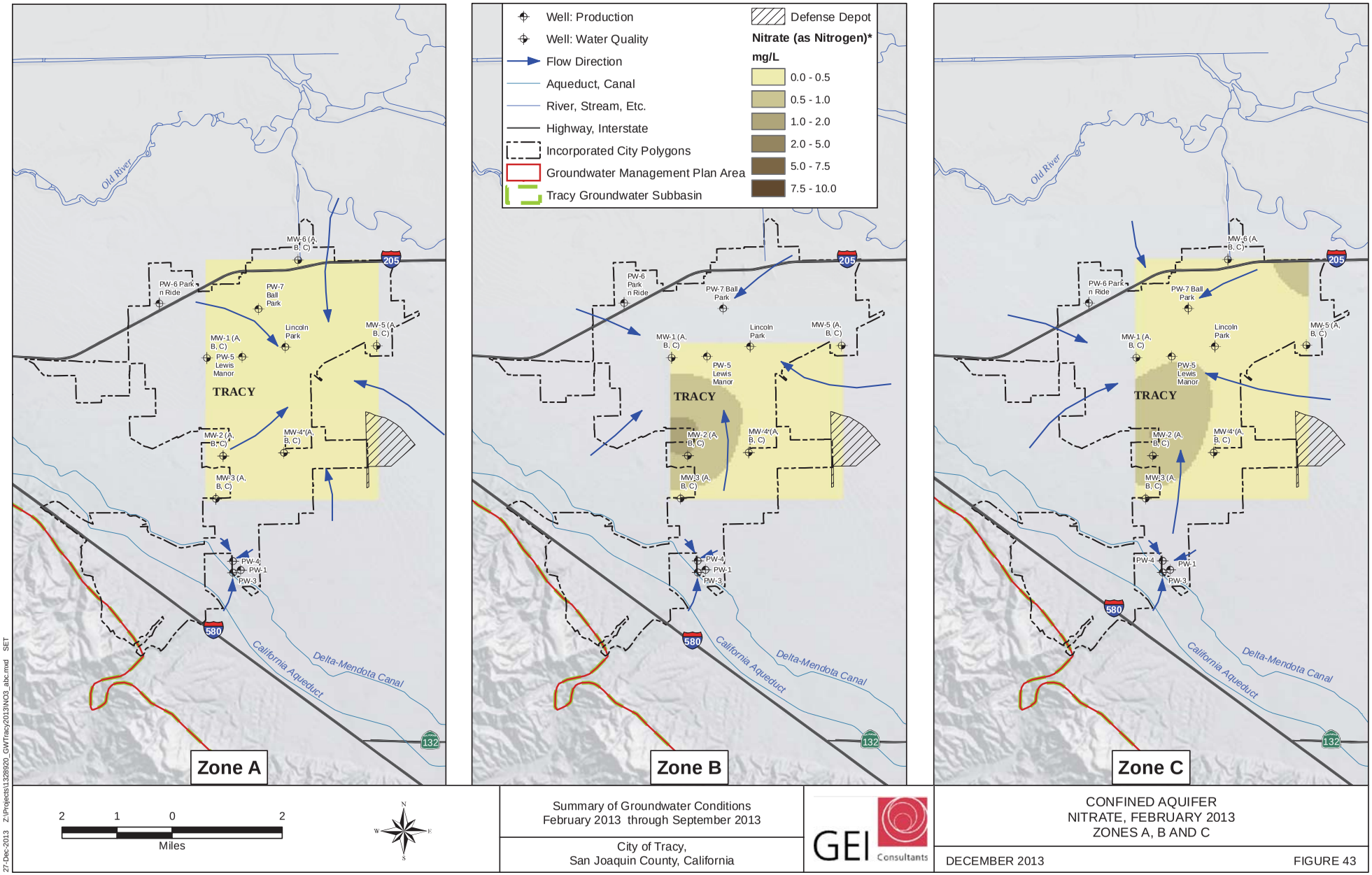

2 1 0 2
Miles

N
W E
S

Summary of Groundwater Conditions
February 2013 through September 2013

City of Tracy,
San Joaquin County, California

GEI Consultants

CONFINED AQUIFER
NITRATE, FEBRUARY 2013
ZONES A, B AND C

DECEMBER 2013 FIGURE 43

27-Dec-2013 Z:\Projects\1328920_GWTracy2013\NO3_abc.mxd SET

Appendix A

Groundwater Level Measurements

CITY OF TRACY
GROUNDWATER LEVEL MEASUREMENTS

LINCOLN		WELL 1		WELL 2		WELL 3		WELL 4		WELL 5 (LEWIS MANOR)		WELL 6 (PARK & RIDE)	
REFERENCE POINT(s)		REFERENCE POINT(s)		REFERENCE POINT(s)		REFERENCE POINT(s)		REFERENCE POINT(s)		REFERENCE POINT(s)		REFERENCE POINT(s)	
Revision Date	Elev. (ft)	Revision Date	Elev. (ft)	Revision Date	Elev. (ft)	Revision Date	Elev. (ft)	Revision Date	Elev. (ft)	Revision Date	Elev. (ft)	Revision Date	Elev. (ft)
21-Aug-01	*44.58*	*21-Aug-01*	*202.25*	*21-Aug-01*	*202.67*	*21-Aug-01*	*215.6*	*21-Aug-01*	*202.08*	*21-Aug-01*	*49*	*21-Aug-01*	*27*
												13-Jul-04	*22*
2-Aug-04	*43.78*	*2-Aug-04*	*199.25*	*2-Aug-04*	*202.51*	*2-Aug-04*	*211.26*	*2-Aug-04*	*192.49*				

DATE MEASURED	DEPTH TO WATER	WAT. SURF. ELEV. (ft)	DEPTH TO WATER	WAT. SURF. ELEV. (ft)	DEPTH TO WATER	WAT. SURF. ELEV. (ft)	DEPTH TO WATER	WAT. SURF. ELEV. (ft)	DEPTH TO WATER	WAT. SURF. ELEV. (ft)	DEPTH TO WATER	WAT. SURF. ELEV. (ft)	DEPTH TO WATER	WAT. SURF. ELEV. (ft)
15-Jan-01														
15-Feb-01														
18-Mar-01			240	-40.75					220	-27.51				
18-Apr-01														
19-May-01														
19-Jun-01														
20-Jul-01														
20-Aug-01														
20-Sep-01														
29-Oct-01	NM	NM	258	-58.75	254.17	-51.66	NM	NM	247	-54.92	96	-47.00		
21-Nov-01	81	-37.22	256	-56.75	245	-42.49	255	-43.74	235	-42.51	NM	NM		
22-Dec-01	82	-38.22	258	-58.75	244	-41.49	252	-40.74	241	-48.51	NM	NM		
16-Jan-02	NM	NM	260	-60.75	NM	NM	NM	NM	235	-42.51	NM	NM		
22-Feb-02	NM	NM	NM	NM	NM	NM	NM	NM	NM	NM	NM	NM		
28-Mar-02	NM	NM	270	-70.75	240	-37.49	253	-41.74	230	-37.51	NM	NM		
25-Apr-02	86	-42.22	NM	NM	NM	NM	NM	NM	NM	NM	84	-35.00		
24-May-02	NM	NM	NM	NM	NM	NM	NM	NM	233	-40.51	NM	NM		
19-Jun-02	NM	NM	NM	NM	NM	NM	NM	NM	235	-42.51	113	-64.00		
27-Jul-02	NM	NM	NM	NM	NM	NM	NM	NM	NM	NM	NM	NM		
29-Aug-02	NM	NM	NM	NM	NM	NM	NM	NM	234	-41.51	110	-61.00		
24-Sep-02	102	-58.22	NM	NM	260	-57.49	NM	NM	NM	NM	NM	NM		
28-Oct-02	NM	NM	NM	NM	256	-53.49	235	-23.74	240	-47.51	100	-51.00		
28-Nov-02	NM	NM	NM	NM	NM	NM	NM	NM	NM	NM	NM	NM		
5-Dec-02	NM	NM	NM	NM	NM	NM	NM	NM	NM	NM	NM	NM		
30-Jan-03	85	-41.22	NM	NM	248	-45.49	NM	NM	238	-45.51	93	-43.80	74	-52.00
24-Feb-03	NM	NM	NM	NM	235	-32.49	NM	NM	228	-35.51	NM	NM	60	-38.00
16-Mar-03	NM	NM	NM	NM	NM	NM	NM	NM	NM	NM	NM	NM	NM	NM
23-Apr-03	85	-41.22	NM	NM	241	-38.49	NM	NM	232	-39.51	90	-41.00	73	-51.00
17-May-03	NM	NM	NM	NM	NM	NM	NM	NM	NM	NM	NM	NM	NM	NM
17-Jun-03	NM	NM	NM	NM	NM	NM	NM	NM	NM	NM	NM	NM	NM	NM
10-Jul-03	NM	NM	NM	NM	NM	NM	NM	NM	250	-57.51	120	-71.00	92	-70.00
18-Aug-03	NM	NM	NM	NM	250	-47.49	NM	NM	245	-52.51	115	-66.00	90	-68.00
11-Sep-03	NM	NM	NM	NM	250.0	-47.49	NM	NM	245	-52.51	115.0	-66.00	90.0	-68.00
14-Oct-03	95.0	-51.22	NM	NM	248.5	-45.99	NM	NM	240.1	-47.61	103.2	-54.20	82.6	-60.60
10-Nov-03	NM	NM	NM	NM	NM	NM	NM	NM	NM	NM	97.0	-48.00	78.7	-56.70
10-Dec-03	NM	NM	NM	NM	NM	NM	NM	NM	NM	NM	98.2	-49.20	79.2	-57.20
20-Jan-04	NM	NM	NM	NM	NM	NM	NM	NM	NM	NM	NM	NM	NM	NM
10-Feb-04	NM	NM	NM	NM	NM	NM	NM	NM	NM	NM	NM	NM	NM	NM
15-Mar-04	NM	NM	NM	NM	233.0	-30.49	NM	NM	228.0	-35.51	99.0	-50.00	78.0	-56.00
22-Apr-04	86.0	-42.22	242	-42.75	230.0	-27.49	235	-23.74	NM	NM	93.0	-44.00	76.0	-54.00
10-May-04	NM	NM	NM	NM	NM	NM	NM	NM	NM	NM	116.5	-67.48	80.0	-58.00
14-Jun-04	NM	NM	NM	NM	NM	NM	NM	NM	NM	NM	116.9	-67.87	87.0	-65.00

NM = Not measured

CITY OF TRACY
GROUNDWATER LEVEL MEASUREMENTS

LINCOLN		WELL 1		WELL 2		WELL 3		WELL 4		WELL 5 (LEWIS MANOR)		WELL 6 (PARK & RIDE)	
REFERENCE POINT(s)		REFERENCE POINT(s)		REFERENCE POINT(s)		REFERENCE POINT(s)		REFERENCE POINT(s)		REFERENCE POINT(s)		REFERENCE POINT(s)	
Revision Date	Elev. (ft)	Revision Date	Elev. (ft)	Revision Date	Elev. (ft)	Revision Date	Elev. (ft)	Revision Date	Elev. (ft)	Revision Date	Elev. (ft)	Revision Date	Elev. (ft)
21-Aug-01	*44.58*	*21-Aug-01*	*202.25*	*21-Aug-01*	*202.67*	*21-Aug-01*	*215.6*	*21-Aug-01*	*202.08*	*21-Aug-01*	*49*	*21-Aug-01*	*27*
												13-Jul-04	*22*
2-Aug-04	*43.78*	*2-Aug-04*	*199.25*	*2-Aug-04*	*202.51*	*2-Aug-04*	*211.26*	*2-Aug-04*	*192.49*				

DATE MEASURED	DEPTH TO WATER	WAT. SURF. ELEV. (ft)	DEPTH TO WATER	WAT. SURF. ELEV. (ft)	DEPTH TO WATER	WAT. SURF. ELEV. (ft)	DEPTH TO WATER	WAT. SURF. ELEV. (ft)	DEPTH TO WATER	WAT. SURF. ELEV. (ft)	DEPTH TO WATER	WAT. SURF. ELEV. (ft)	DEPTH TO WATER	WAT. SURF. ELEV. (ft)
20-Jul-04	NM	NM	NM	NM	NM	NM	NM	NM	NM	NM	124.3	-75.32	89.0	-67.00
16-Aug-04	NM	NM	270	-70.75	268.0	-65.49	255	-43.74	257.0	-64.51	NM	NM	NM	NM
14-Sep-04	NM	NM	NM	NM	NM	NM	NM	NM	NM	NM	121.0	-72.00	90.0	-68.00
21-Oct-04	92.2	-48.42	NM	NM	250.5	-47.99	263	-51.54	242.5	-50.01	108.4	-59.40	85.2	-63.20
9-Nov-04	NM	NM	NM	NM	NM	NM	NM	NM	NM	NM	NM	NM	NM	NM
3-Dec-04	NM	NM	NM	NM	NM	NM	NM	NM	NM	NM	NM	NM	NM	NM
24-Jan-05	NM	NM	NM	NM	NM	NM	NM	NM	NM	NM	NM	NM	72.9	-50.90
22-Feb-05	NM	NM	NM	NM	NM	NM	NM	NM	NM	NM	91.5	-42.50	NM	NM
15-Mar-05	NM	NM	240	-40.75	240.0	-37.49	249	-37.74	231.0	-38.51	91.0	-42.00	71.2	-49.20
22-Apr-05	84.0	-40.22	240	-40.75	237.0	-34.49	245	-33.74	231.0	-38.51	83.0	-34.00	69.0	-47.00
20-May-05	NM	NM	NM	NM	NM	NM	NM	NM	NM	NM	NM	NM	NM	NM
23-Jun-05	NM	NM	NM	NM	NM	NM	NM	NM	NM	NM	NM	NM	NM	NM
26-Jul-05	NM	NM	NM	NM	NM	NM	NM	NM	NM	NM	NM	NM	NM	NM
15-Aug-05	NM	NM	NM	NM	NM	NM	NM	NM	NM	NM	NM	NM	NM	NM
14-Sep-05	NM	NM	NM	NM	NM	NM	NM	NM	NM	NM	NM	NM	NM	NM
11-Oct-05	88.0	-44.22	248	-48.75	250.0	-47.49	258	-46.74	240.0	-47.51	97.3	-48.30	80.0	-58.00
4-Nov-05	NM	NM	NM	NM	NM	NM	NM	NM	NM	NM	NM	NM	NM	NM
7-Dec-05	NM	NM	NM	NM	NM	NM	NM	NM	NM	NM	NM	NM	NM	NM
1-Jan-06	NM	NM	NM	NM	NM	NM	NM	NM	NM	NM	NM	NM	NM	NM
15-Feb-06	NM	NM	NM	NM	NM	NM	NM	NM	NM	NM	NM	NM	NM	NM
10-Mar-06	NM	NM	235	-35.75	205.0	-2.49	238	-26.74	195.0	-2.51	NM	NM	NM	NM
26-Apr-06	NM	NM	NM	NM	NM	NM	NM	NM	NM	NM	NM	NM	NM	NM
1-May-06	NM	NM	NM	NM	NM	NM	NM	NM	NM	NM	NM	NM	NM	NM
1-Jun-06	NM	NM	NM	NM	NM	NM	NM	NM	NM	NM	NM	NM	NM	NM
1-Jul-06	NM	NM	NM	NM	NM	NM	NM	NM	NM	NM	NM	NM	NM	NM
1-Aug-06	NM	NM	NM	NM	NM	NM	NM	NM	NM	NM	NM	NM	NM	NM
1-Sep-06	NM	NM	NM	NM	NM	NM	NM	NM	NM	NM	NM	NM	NM	NM
1-Oct-06	NM	NM	NM	NM	NM	NM	NM	NM	NM	NM	NM	NM	NM	NM
30-Nov-06	80.0	-36.22	NM	NM	240.0	-37.49	NM	NM	230.0	-37.51	82.0	-33.00	68.0	-46.00
1-Dec-06	NM	NM	NM	NM	NM	NM	NM	NM	NM	NM	NM	NM	NM	NM
1-Jan-07	NM	NM	NM	NM	NM	NM	NM	NM	NM	NM	NM	NM	NM	NM
1-Feb-07	NM	NM	NM	NM	NM	NM	NM	NM	NM	NM	NM	NM	NM	NM
16-Mar-07	76.0	-32.22	NM	NM	NM	NM	NM	NM	NM	NM	86.0	-37.00	68.0	-46.00
25-Apr-07	NM	NM	NM	NM	NM	NM	NM	NM	NM	NM	NM	NM	NM	NM
30-May-07	NM	NM	242	-42.75	247.0	-44.49	238	-26.74	228.0	-35.51	NM	NM	NM	NM
1-Jun-07	NM	NM	NM	NM	NM	NM	NM	NM	NM	NM	NM	NM	NM	NM
25-Jul-07	NM	NM	NM	NM	NM	NM	NM	NM	NM	NM	NM	NM	NM	NM
1-Aug-07	NM	NM	NM	NM	NM	NM	NM	NM	NM	NM	NM	NM	NM	NM
1-Sep-07	NM	NM	NM	NM	NM	NM	NM	NM	NM	NM	NM	NM	NM	NM
16-Oct-07	NM	NM	NM	NM	NM	NM	245	-33.74	235.5	-43.01	NM	NM	NM	NM
11-Nov-07	84.0	-40.22	245.6	-46.35	247.2	-44.69	NM	NM	NM	NM	84.0	-35.00	72.0	-50.00
1-Dec-07	NM	NM	NM	NM	NM	NM	NM	NM	NM	NM	NM	NM	NM	NM

NM = Not measured

CITY OF TRACY
GROUNDWATER LEVEL MEASUREMENTS

LINCOLN		WELL 1		WELL 2		WELL 3		WELL 4		WELL 5 (LEWIS MANOR)		WELL 6 (PARK & RIDE)	
REFERENCE POINT(s)		REFERENCE POINT(s)		REFERENCE POINT(s)		REFERENCE POINT(s)		REFERENCE POINT(s)		REFERENCE POINT(s)		REFERENCE POINT(s)	
Revision Date	Elev. (ft)	Revision Date	Elev. (ft)	Revision Date	Elev. (ft)	Revision Date	Elev. (ft)	Revision Date	Elev. (ft)	Revision Date	Elev. (ft)	Revision Date	Elev. (ft)
21-Aug-01	*44.58*	*21-Aug-01*	*202.25*	*21-Aug-01*	*202.67*	*21-Aug-01*	*215.6*	*21-Aug-01*	*202.08*	*21-Aug-01*	*49*	*21-Aug-01*	*27*
												13-Jul-04	*22*
2-Aug-04	*43.78*	*2-Aug-04*	*199.25*	*2-Aug-04*	*202.51*	*2-Aug-04*	*211.26*	*2-Aug-04*	*192.49*				

DATE MEASURED	DEPTH TO WATER	WAT. SURF. ELEV. (ft)	DEPTH TO WATER	WAT. SURF. ELEV. (ft)	DEPTH TO WATER	WAT. SURF. ELEV. (ft)	DEPTH TO WATER	WAT. SURF. ELEV. (ft)	DEPTH TO WATER	WAT. SURF. ELEV. (ft)	DEPTH TO WATER	WAT. SURF. ELEV. (ft)	DEPTH TO WATER	WAT. SURF. ELEV. (ft)
1-Jan-08	NM	NM	NM	NM	NM	NM	NM	NM	NM	NM	NM	NM	NM	NM
1-Feb-08	NM	NM	NM	NM	NM	NM	NM	NM	NM	NM	NM	NM	NM	NM
10-Mar-08	NM	NM	227	-27.75	228.0	-25.49	238	-26.74	219.0	-26.51	76.0	-27.00	64.0	-42.00
1-Apr-08	NM	NM	NM	NM	NM	NM	NM	NM	NM	NM	NM	NM	NM	NM
1-May-08	NM	NM	NM	NM	NM	NM	NM	NM	NM	NM	NM	NM	NM	NM
26-Jun-08	NM	NM	NM	NM	NM	NM	NM	NM	NM	NM	NM	NM	NM	NM
8-Jul-08	89.0	-45.22	259	-59.75	255.0	-52.49	265	-53.74	246.0	-53.51	95.0	-46.00	78.0	-56.00
1-Aug-08	NM	NM	NM	NM	NM	NM	NM	NM	NM	NM	97.0	-48.00	89.0	-67.00
1-Sep-08	NM	NM	258	-58.75	259.0	-56.49	267	-55.74	NM	NM	99.0	-50.00	79.0	-57.00
1-Oct-08	87.0	-43.22	NM	NM	NM	NM	NM	NM	NM	NM	NM	NM	NM	NM
1-Nov-08	NM	NM	NM	NM	221.0	-18.49	246	-34.74	230.0	-37.51	84.0	-35.00	71.5	-49.50
1-Dec-08	75.0	-31.22	235	-35.75	234.0	-31.49	245	-33.74	226.0	-33.51	80.0	-31.00	69.0	-47.00
1-Jan-09	71.0	-27.22	235	-35.75	233.0	-30.49	223	-11.74	243.0	-50.51	77.0	-28.00	66.0	-44.00
1-Feb-09	75.0	-31.22	235	-35.75	234.0	-31.49	248	-36.74	228.0	-35.51	74.0	-25.00	65.0	-43.00
1-Mar-09	71.0	-27.22	236	-36.75	236.0	-33.49	246	-34.74	228.0	-35.51	73.0	-24.00	65.0	-43.00
1-Apr-09	78.0	-34.22	243	-43.75	242.0	-39.49	256	-44.74	236.0	-43.51	80.0	-31.00	73.0	-51.00
1-May-09	80.0	-36.22	255	-55.75	248.0	-45.49	260	-48.74	242.0	-49.51	86.0	-37.00	73.0	-51.00
1-Jun-09	88.0	-44.22	254	-54.75	254.0	-51.49	265	-53.74	247.0	-54.51	93.0	-44.00	76.0	-54.00
1-Jul-09	95.0	-51.22	251	-51.75	251.0	-48.49	261	-49.74	241.0	-48.51	98.0	-49.00	85.0	-63.00
1-Aug-09	94.0	-50.22	252	-52.75	252.0	-49.49	262	-50.74	242.0	-49.51	100.0	-51.00	84.0	-62.00
1-Sep-09	90.0	-46.22	251	-51.75	253.0	-50.49	261	-49.74	241.0	-48.51	97.0	-48.00	80.0	-58.00
1-Oct-09	93.0	-49.22	249	-49.75	250.0	-47.49	258	-46.74	239.0	-46.51	93.0	-44.00	80.0	-58.00
1-Nov-09	78.0	-34.22	241	-41.75	242.0	-39.49	252	-40.74	232.0	-39.51	87.0	-38.00	76.0	-54.00
1-Dec-09	NM	NM	237	-37.75	238.0	-35.49	248	-36.74	228.0	-35.51	85.0	-36.00	72.0	-50.00
1-Jan-10	no data 2010	NM	NM	NM	233.0	-30.49	241	-29.74	240.0	-47.51	80.0	-31.00	73.0	-51.00
1-Feb-10	NM	NM	NM	NM	230.0	-27.49	238	-26.74	230.0	-37.51	78.0	-29.00	69.0	-47.00
1-Mar-10	NM	NM	NM	NM	229.0	-26.49	237	-25.74	220.0	-27.51	73.0	-24.00	67.0	-45.00
1-Apr-10	NM	NM	NM	NM	237.0	-34.49	246	-34.74	230.0	-37.51	73.0	-24.00	68.0	-46.00
1-May-10	NM	NM	NM	NM	238.0	-35.49	242	-30.74	225.0	-32.51	75.0	-26.00	65.0	-43.00
1-Jun-10	NM	NM	NM	NM	237.0	-34.49	244	-32.74	223.0	-30.51	70.0	-21.00	67.0	-45.00
1-Jul-10	NM	NM	NM	NM	238.0	-35.49	247	-35.74	228.0	-35.51	71.0	-22.00	68.0	-46.00
1-Aug-10	NM	NM	NM	NM	240.0	-37.49	239	-27.74	228.0	-35.51	71.0	-22.00	69.0	-47.00
1-Sep-10	NM	NM	NM	NM	241.0	-38.49	249	-37.74	228.0	-35.51	85.0	-36.00	73.0	-51.00
1-Oct-10	NM	NM	NM	NM	235.0	-32.49	240	-28.74	222.0	-29.51	82.0	-33.00	70.0	-48.00
1-Nov-10	NM	NM	NM	NM	out of service	NM	NM	NM	NM	NM	76.0	-27.00	67.0	-45.00
24-Dec-10	NM	NM	NM	NM	NM	NM	NM	NM	NM	NM	70.0	-21.00	64.0	-42.00
1-Jan-11	NM	NM	NM	NM	NM	NM	NM	NM	NM	NM	68.0	-19.00	60.0	-38.00
1-Feb-11	NM	NM	NM	NM	NM	NM	NM	NM	NM	NM	61.0	-12.00	57.0	-35.00
1-Mar-11	NM	NM	NM	NM	NM	NM	NM	NM	NM	NM	62.0	-13.00	57.0	-35.00
1-Apr-11	NM	NM	NM	NM	NM	NM	NM	NM	NM	NM	64.0	-15.00	60.0	-38.00
1-May-11	NM	NM	NM	NM	NM	NM	NM	NM	NM	NM	65.0	-16.00	59.0	-37.00
7-Jun-11	NM	NM	NM	NM	NM	NM	NM	NM	NM	NM	67.0	-18.00	60.0	-38.00

NM = Not measured

CITY OF TRACY
GROUNDWATER LEVEL MEASUREMENTS

LINCOLN		WELL 1		WELL 2		WELL 3		WELL 4		WELL 5 (LEWIS MANOR)		WELL 6 (PARK & RIDE)	
REFERENCE POINT(s)		REFERENCE POINT(s)		REFERENCE POINT(s)		REFERENCE POINT(s)		REFERENCE POINT(s)		REFERENCE POINT(s)		REFERENCE POINT(s)	
Revision Date	Elev. (ft)	Revision Date	Elev. (ft)	Revision Date	Elev. (ft)	Revision Date	Elev. (ft)	Revision Date	Elev. (ft)	Revision Date	Elev. (ft)	Revision Date	Elev. (ft)
21-Aug-01	*44.58*	*21-Aug-01*	*202.25*	*21-Aug-01*	*202.67*	*21-Aug-01*	*215.6*	*21-Aug-01*	*202.08*	*21-Aug-01*	*49*	*21-Aug-01*	*27*
												13-Jul-04	*22*
2-Aug-04	*43.78*	*2-Aug-04*	*199.25*	*2-Aug-04*	*202.51*	*2-Aug-04*	*211.26*	*2-Aug-04*	*192.49*				

DATE MEASURED	DEPTH TO WATER	WAT. SURF. ELEV. (ft)	DEPTH TO WATER	WAT. SURF. ELEV. (ft)	DEPTH TO WATER	WAT. SURF. ELEV. (ft)	DEPTH TO WATER	WAT. SURF. ELEV. (ft)	DEPTH TO WATER	WAT. SURF. ELEV. (ft)	DEPTH TO WATER	WAT. SURF. ELEV. (ft)	DEPTH TO WATER	WAT. SURF. ELEV. (ft)
1-Jul-11	NM	NM	NM	NM	NM	NM	NM	NM	NM	NM	71.0	-22.00	60.0	-38.00
9-Aug-11	73.0	-29.22	NM	NM	NM	NM	NM	NM	NM	NM	72.0	-23.00	61.0	-39.00
21-Sep-11	NM	NM	233.23	-33.98	NM	NM	NM	NM	NM	NM	80.0	-31.00	63.0	-41.00
24-Oct-11	68.0	-24.17	230	-30.75	NM	NM	NM	NM	NM	NM	74.0	-25.00	65.0	-43.00
1-Nov-11	NM	NM	NM	NM	NM	NM	NM	NM	NM	NM	64.0	-15.00	61.0	-39.00
6-Dec-11	NM	NM	224	-24.75	NM	NM	NM	NM	NM	NM	65.0	-16.00	59.0	-37.00
1-Jan-12	NM	NM	NM	NM	NM	NM	NM	NM	NM	NM	54.0	-5.00	55.0	-33.00
1-Feb-12	NM	NM	NM	NM	NM	NM	NM	NM	NM	NM	51.0	-2.00	51.0	-29.00
22-Mar-12	NM	NM	NM	NM	NM	NM	NM	NM	NM	NM	49.0	0.00	51.0	-29.00
1-Apr-12	NM	NM	NM	NM	NM	NM	NM	NM	NM	NM	49.0	0.00	50.0	-28.00
1-May-12	NM	NM	NM	NM	NM	NM	NM	NM	NM	NM	54.0	-5.00	50.0	-28.00
18-Jun-12	NM	NM	NM	NM	NM	NM	NM	NM	NM	NM	61.0	-12.00	50.0	-28.00
1-Jul-12	NM	NM	NM	NM	NM	NM	NM	NM	NM	NM	67.0	-18.00	56.0	-34.00
1-Aug-12	NM	NM	NM	NM	NM	NM	NM	NM	NM	NM	78.0	-29.00	57.0	-35.00
19-Sep-12	NM	NM	NM	NM	NM	NM	NM	NM	NM	NM	80.0	-31.00	58.0	-36.00
1-Oct-12	NM	NM	NM	NM	NM	NM	NM	NM	NM	NM	69.0	-20.00	59.0	-37.00
1-Nov-12	NM	NM	NM	NM	NM	NM	NM	NM	NM	NM	62.0	-13.00	57.0	-35.00
1-Dec-12	NM	NM	NM	NM	NM	NM	NM	NM	NM	NM	60.0	-11.00	57.0	-35.00
1-Jan-13	NM	NM	NM	NM	NM	NM	NM	NM	NM	NM	64.0	-15.00	58.0	-36.00
1-Feb-13	NM	NM	NM	NM	NM	NM	NM	NM	NM	NM	52.0	-3.00	52.0	-30.00
1-Mar-13	NM	NM	NM	NM	NM	NM	NM	NM	NM	NM	53.0	-4.00	50.0	-28.00
11-Apr-13	NM	NM	169.7	29.55	NM	NM	229	-17.99	210.2	-17.66	52.0	-3.00	51.0	-29.00
1-May-13	NM	NM	NM	NM	NM	NM	NM	NM	NM	NM	59.0	-10.00	58.0	-36.00
1-Jun-13	NM	NM	178.9	20.35	NM	NM	NM	NM	NM	NM	78.0	-29.00	64.0	-42.00
1-Jul-13	NM	NM	192.3	6.95	NM	NM	247	-35.54	227.0	-34.51	76.0	-27.00	60.0	-38.00
1-Aug-13	NM	NM	191.3	7.95	NM	NM	248	-36.74	228.5	-36.01	78.0	-29.00	60.0	-38.00
16-Sep-13	76.0	-32.22	192.6	6.65	NM	NM	251	-39.74	231.2	-38.71	74.0	-25.00	61.0	-39.00

NM = Not measured

CITY OF TRACY
GROUNDWATER LEVEL MEASUREMENTS

WELL 7 (BALL PARK)		WELL 8 (ASR)		MW-1A		MW-1B		MW-1C		MW-2A		MW-2B	
REFERENCE POINT(s)		REFERENCE POINT(s)		REFERENCE POINT(s)		REFERENCE POINT(s)		REFERENCE POINT(s)		REFERENCE POINT(s)		REFERENCE POINT(s)	
Revision Date	Elev. (ft)	Revision Date	Elev. (ft)	Revision Date	Elev. (ft)	Revision Date	Elev. (ft)	Revision Date	Elev. (ft)	Revision Date	Elev. (ft)	Revision Date	Elev. (ft)
21-Aug-01	*22*	*19-Dec-13*	*55*	*5-Dec-02*	*41.47*	*5-Dec-02*	*41.45*	*5-Dec-02*	*41.45*	*5-Dec-02*	*91.00*	*5-Dec-02*	*91.00*
13-Jul-04	27			*28-Jun-04*	49.251	*28-Jun-04*	50.094	*28-Jun-04*	51.203	*28-Jun-04*	92.586	*28-Jun-04*	92.525

DATE MEASURED	DEPTH TO WATER	WAT. SURF. ELEV. (ft)	DEPTH TO WATER	WAT. SURF. ELEV. (ft)	DEPTH TO WATER	WAT. SURF. ELEV. (ft)	DEPTH TO WATER	WAT. SURF. ELEV. (ft)	DEPTH TO WATER	WAT. SURF. ELEV. (ft)	DEPTH TO WATER	WAT. SURF. ELEV. (ft)	DEPTH TO WATER	WAT. SURF. ELEV. (ft)
15-Jan-01														
15-Feb-01														
18-Mar-01														
18-Apr-01														
19-May-01														
19-Jun-01														
20-Jul-01														
20-Aug-01														
20-Sep-01														
29-Oct-01														
21-Nov-01														
22-Dec-01														
16-Jan-02														
22-Feb-02														
28-Mar-02														
25-Apr-02														
24-May-02														
19-Jun-02														
27-Jul-02														
29-Aug-02														
24-Sep-02														
28-Oct-02														
28-Nov-02														
5-Dec-02					86.15	-36.90	90.38	-40.29	90.98	-39.78	129.00	-36.41	133.64	-41.12
30-Jan-03	88	-61.00			NM	NM	NM	NM	NM	NM	NM	NM	NM	NM
24-Feb-03	NM	NM			NM	NM	NM	NM	NM	NM	NM	NM	NM	NM
16-Mar-03	NM	NM			NM	NM	NM	NM	NM	NM	NM	NM	NM	NM
23-Apr-03	87	-60.00			NM	NM	NM	NM	NM	NM	NM	NM	NM	NM
17-May-03	NM	NM			NM	NM	NM	NM	NM	NM	NM	NM	NM	NM
17-Jun-03	NM	NM			NM	NM	NM	NM	NM	NM	NM	NM	NM	NM
10-Jul-03	96	-69.00			106.90	-57.65	116.47	-66.38	118.68	-67.48	138.98	-46.39	146.76	-54.24
18-Aug-03	NM	NM			NM	NM	NM	NM	NM	NM	NM	NM	149.39	-56.87
11-Sep-03	NM	NM			NM	NM	NM	NM	NM	NM	NM	NM	NM	NM
14-Oct-03	95.3	-68.30			NM	NM	NM	NM	NM	NM	NM	NM	NM	NM
10-Nov-03	91.8	-64.80			88.62	-39.37	95.82	-45.73	98.18	-46.98	131.23	-38.64	136.32	-43.80
10-Dec-03	88.0	-61.00			96.73	-47.48	99.41	-49.32	98.51	-47.31	130.49	-37.90	135.70	-43.18
20-Jan-04	NM	NM			93.79	-44.54	95.80	-45.71	95.71	-44.51	127.89	-35.30	134.09	-41.57
10-Feb-04	NM	NM			82.89	-33.64	92.01	-41.92	96.28	-45.08	127.78	-35.19	131.39	-38.87
15-Mar-04	92.0	-65.00			82.58	-33.33	92.81	-42.72	94.59	-43.39	124.43	-31.84	129.31	-36.79
22-Apr-04	85.0	-58.00			84.13	-34.88	91.38	-41.29	92.12	-40.92	127.78	-35.19	129.42	-36.90
10-May-04	95.0	-68.00			97.22	-47.97	102.97	-52.88	103.24	-52.04	131.76	-39.17	137.18	-44.66
14-Jun-04	94.0	-67.00			106.63	-57.38	113.09	-63.00	113.97	-62.77	136.94	-44.35	143.59	-51.07

NM = Not measured

CITY OF TRACY
GROUNDWATER LEVEL MEASUREMENTS

WELL 7 (BALL PARK)		WELL 8 (ASR)		MW-1A		MW-1B		MW-1C		MW-2A		MW-2B	
REFERENCE POINT(s)		REFERENCE POINT(s)		REFERENCE POINT(s)		REFERENCE POINT(s)		REFERENCE POINT(s)		REFERENCE POINT(s)		REFERENCE POINT(s)	
Revision Date	Elev. (ft)	Revision Date	Elev. (ft)	Revision Date	Elev. (ft)	Revision Date	Elev. (ft)	Revision Date	Elev. (ft)	Revision Date	Elev. (ft)	Revision Date	Elev. (ft)
21-Aug-01	*22*	*19-Dec-13*	*55*	*5-Dec-02*	*41.47*	*5-Dec-02*	*41.45*	*5-Dec-02*	*41.45*	*5-Dec-02*	*91.00*	*5-Dec-02*	*91.00*
13-Jul-04	27			*28-Jun-04*	49.251	*28-Jun-04*	50.094	*28-Jun-04*	51.203	*28-Jun-04*	92.586	*28-Jun-04*	92.525

DATE MEASURED	DEPTH TO WATER	WAT. SURF. ELEV. (ft)	DEPTH TO WATER	WAT. SURF. ELEV. (ft)	DEPTH TO WATER	WAT. SURF. ELEV. (ft)	DEPTH TO WATER	WAT. SURF. ELEV. (ft)	DEPTH TO WATER	WAT. SURF. ELEV. (ft)	DEPTH TO WATER	WAT. SURF. ELEV. (ft)	DEPTH TO WATER	WAT. SURF. ELEV. (ft)
20-Jul-04	97.0	-70.00			108.97	-59.72	115.18	-65.09	117.41	-66.21	141.47	-48.88	149.63	-57.11
16-Aug-04	NM	NM			108.88	-59.63	117.64	-67.55	120.35	-69.15	143.90	-51.31	152.01	-59.49
14-Sep-04	96.0	-69.00			108.89	-59.64	115.20	-65.11	120.59	-69.39	144.41	-51.82	152.48	-59.96
21-Oct-04	95.3	-68.30			91.36	-42.11	100.58	-50.49	103.35	-52.15	137.95	-45.36	143.05	-50.53
9-Nov-04	NM	NM			84.24	-34.99	91.90	-41.81	93.41	-42.21	132.23	-39.64	136.11	-43.59
3-Dec-04	NM	NM			80.66	-31.41	88.43	-38.34	89.84	-38.64	128.81	-36.22	138.53	-46.01
24-Jan-05	NM	NM			84.51	-35.26	90.20	-40.11	91.72	-40.52	126.57	-33.98	132.99	-40.47
22-Feb-05	84.2	-57.20			77.34	-28.09	87.38	-37.29	90.21	-39.01	124.88	-32.29	130.35	-37.83
15-Mar-05	82.8	-55.80			74.25	-25.00	82.52	-32.43	84.16	-32.96	122.80	-30.21	126.16	-33.64
22-Apr-05	81.0	-54.00			74.14	-24.89	86.17	-36.08	88.27	-37.07	122.92	-30.33	126.93	-34.41
20-May-05	NM	NM			84.71	-35.46	92.12	-42.03	89.76	-38.56	125.34	-32.75	128.92	-36.40
23-Jun-05	NM	NM			95.23	-45.98	99.93	-49.84	101.94	-50.74	131.66	-39.07	137.31	-44.79
26-Jul-05	NM	NM			104.69	-55.44	114.98	-64.89	117.87	-66.67	137.84	-45.25	146.64	-54.12
15-Aug-05	NM	NM			98.91	-49.66	109.64	-59.55	110.45	-59.25	140.63	-48.04	146.60	-54.08
14-Sep-05	NM	NM			92.76	-43.51	100.03	-49.94	101.61	-50.41	138.63	-46.04	142.82	-50.30
11-Oct-05	88.6	-61.60			88.03	-38.78	95.50	-45.41	97.83	-46.63	134.61	-42.02	138.21	-45.69
4-Nov-05	NM	NM			82.98	-33.73	91.75	-41.66	93.19	-41.99	130.31	-37.72	134.47	-41.95
7-Dec-05	NM	NM			85.79	-36.54	93.42	-43.33	91.71	-40.51	126.20	-33.61	131.23	-38.71
1-Jan-06	NM	NM			NM	NM	NM	NM	NM	NM	NM	NM	NM	NM
15-Feb-06	NM	NM			79.52	-30.27	82.32	-32.23	83.89	-32.69	120.55	-27.96	123.94	-31.42
10-Mar-06	NM	NM			74.06	-24.81	78.78	-28.69	80.28	-29.08	119.19	-26.60	121.51	-28.99
26-Apr-06	NM	NM			66.71	-17.46	74.18	-24.09	75.63	-24.43	115.40	-22.81	117.45	-24.93
1-May-06	NM	NM			NM	NM	NM	NM	NM	NM	NM	NM	NM	NM
1-Jun-06	NM	NM			NM	NM	NM	NM	NM	NM	NM	NM	NM	NM
1-Jul-06	NM	NM			NM	NM	NM	NM	NM	NM	NM	NM	NM	NM
1-Aug-06	NM	NM			NM	NM	NM	NM	NM	NM	NM	NM	NM	NM
1-Sep-06	NM	NM			NM	NM	NM	NM	NM	NM	NM	NM	NM	NM
1-Oct-06	NM	NM			NM	NM	NM	NM	NM	NM	NM	NM	NM	NM
30-Nov-06	79.0	-52.00			NM	NM	NM	NM	NM	NM	NM	NM	NM	NM
1-Dec-06	NM	NM			NM	NM	NM	NM	NM	NM	NM	NM	NM	NM
1-Jan-07	NM	NM			NM	NM	NM	NM	NM	NM	NM	NM	NM	NM
1-Feb-07	NM	NM			NM	NM	NM	NM	NM	NM	NM	NM	NM	NM
16-Mar-07	76.0	-49.00			72.18	-22.93	77.71	-27.62	80.02	-28.82	116.32	-23.73	120.28	-27.76
25-Apr-07	NM	NM			85.92	-36.67	94.79	-44.70	96.84	-45.64	123.69	-31.10	129.91	-37.39
30-May-07	NM	NM			NM	NM	NM	NM	NM	NM	NM	NM	NM	NM
1-Jun-07	NM	NM			NM	NM	NM	NM	NM	NM	NM	NM	NM	NM
25-Jul-07	NM	NM			92.07	-42.82	99.05	-48.96	100.06	-48.86	133.29	-40.70	136.53	-44.01
1-Aug-07	NM	NM			NM	NM	NM	NM	NM	NM	NM	NM	NM	NM
1-Sep-07	NM	NM			NM	NM	NM	NM	NM	NM	NM	NM	NM	NM
16-Oct-07	NM	NM			NM	NM	NM	NM	NM	NM	NM	NM	NM	NM
11-Nov-07	82.0	-55.00			74.78	-25.53	82.21	-32.12	83.51	-32.31	123.45	-30.86	126.04	-33.52
1-Dec-07	NM	NM			NM	NM	NM	NM	NM	NM	NM	NM	NM	NM

NM = Not measured

CITY OF TRACY
GROUNDWATER LEVEL MEASUREMENTS

WELL 7 (BALL PARK)		WELL 8 (ASR)		MW-1A		MW-1B		MW-1C		MW-2A		MW-2B	
REFERENCE POINT(s)		REFERENCE POINT(s)		REFERENCE POINT(s)		REFERENCE POINT(s)		REFERENCE POINT(s)		REFERENCE POINT(s)		REFERENCE POINT(s)	
Revision Date	Elev. (ft)	Revision Date	Elev. (ft)	Revision Date	Elev. (ft)	Revision Date	Elev. (ft)	Revision Date	Elev. (ft)	Revision Date	Elev. (ft)	Revision Date	Elev. (ft)
21-Aug-01	*22*	*19-Dec-13*	*55*	*5-Dec-02*	*41.47*	*5-Dec-02*	*41.45*	*5-Dec-02*	*41.45*	*5-Dec-02*	*91.00*	*5-Dec-02*	*91.00*
13-Jul-04	27			*28-Jun-04*	49.251	*28-Jun-04*	50.094	*28-Jun-04*	51.203	*28-Jun-04*	92.586	*28-Jun-04*	92.525

DATE MEASURED	DEPTH TO WATER	WAT. SURF. ELEV. (ft)	DEPTH TO WATER	WAT. SURF. ELEV. (ft)	DEPTH TO WATER	WAT. SURF. ELEV. (ft)	DEPTH TO WATER	WAT. SURF. ELEV. (ft)	DEPTH TO WATER	WAT. SURF. ELEV. (ft)	DEPTH TO WATER	WAT. SURF. ELEV. (ft)	DEPTH TO WATER	WAT. SURF. ELEV. (ft)
1-Jan-08	NM	NM			NM	NM	NM	NM	NM	NM	NM	NM	NM	NM
1-Feb-08	NM	NM			NM	NM	NM	NM	NM	NM	NM	NM	NM	NM
10-Mar-08	73.5	-46.50			67.86	-18.61	76.82	-26.73	77.81	-26.61	115.49	-22.90	119.67	-27.15
1-Apr-08	NM	NM			NM	NM	NM	NM	NM	NM	NM	NM	NM	NM
1-May-08	NM	NM			NM	NM	NM	NM	NM	NM	NM	NM	NM	NM
26-Jun-08	NM	NM			86.76	-37.51	95.01	-44.92	92.46	-41.26	128.78	-36.19	133.52	-41.00
8-Jul-08	88.0	-61.00			82.71	-33.46	87.15	-37.06	97.46	-46.26	130.32	-37.73	136.75	-44.23
1-Aug-08	80.0	-53.00			NM	NM	NM	NM	NM	NM	NM	NM	NM	NM
1-Sep-08	89.0	-62.00			NM	NM	NM	NM	NM	NM	NM	NM	NM	NM
1-Oct-08	NM	NM			NM	NM	NM	NM	NM	NM	NM	NM	NM	NM
1-Nov-08	NM	NM			NM	NM	NM	NM	NM	NM	NM	NM	NM	NM
1-Dec-08	77.0	-50.00			71.23	-21.98	79.23	-29.14	80.41	-29.21	119.15	-26.56	123.04	-30.52
1-Jan-09	74.0	-47.00			67.69	-18.44	76.26	-26.17	77.25	-26.05	116.12	-23.53	120.72	-28.20
1-Feb-09	72.0	-45.00			NM	NM	NM	NM	NM	NM	NM	NM	NM	NM
1-Mar-09	72.0	-45.00			NM	NM	NM	NM	NM	NM	NM	NM	NM	NM
1-Apr-09	80.0	-53.00			NM	NM	NM	NM	NM	NM	NM	NM	NM	NM
1-May-09	82.0	-55.00			NM	NM	NM	NM	NM	NM	NM	NM	NM	NM
1-Jun-09	86.0	-59.00			80.90	-31.65	94.42	-44.33	96.69	-45.49	136.36	-43.77	142.16	-49.64
1-Jul-09	90.0	-63.00			NM	NM	NM	NM	NM	NM	NM	NM	NM	NM
1-Aug-09	89.0	-62.00			NM	NM	NM	NM	NM	NM	NM	NM	NM	NM
1-Sep-09	89.0	-62.00			NM	NM	NM	NM	NM	NM	NM	NM	NM	NM
1-Oct-09	87.0	-60.00			NM	NM	NM	NM	NM	NM	NM	NM	NM	NM
1-Nov-09	83.0	-56.00			NM	NM	NM	NM	NM	NM	NM	NM	NM	NM
1-Dec-09	81.0	-54.00			NM	NM	NM	NM	NM	NM	NM	NM	NM	NM
1-Jan-10	77.0	-50.00			NM	NM	NM	NM	NM	NM	NM	NM	NM	NM
1-Feb-10	74.0	-47.00			NM	NM	NM	NM	NM	NM	NM	NM	NM	NM
1-Mar-10	71.0	-44.00			NM	NM	NM	NM	NM	NM	NM	NM	NM	NM
1-Apr-10	73.0	-46.00			NM	NM	NM	NM	NM	NM	NM	NM	NM	NM
1-May-10	73.0	-46.00	90.0	-35.43	NM	NM	NM	NM	NM	NM	NM	NM	NM	NM
1-Jun-10	77.0	-50.00	91.0	-36.43	NM	NM	NM	NM	NM	NM	NM	NM	NM	NM
1-Jul-10	81.0	-54.00	94.0	-39.43	NM	NM	NM	NM	NM	NM	NM	NM	NM	NM
1-Aug-10	81.0	-54.00	95.0	-40.43	NM	NM	NM	NM	NM	NM	NM	NM	NM	NM
1-Sep-10	84.0	-57.00	97.0	-42.43	NM	NM	NM	NM	NM	NM	NM	NM	NM	NM
1-Oct-10	80.0	-53.00	93.0	-38.43	NM	NM	NM	NM	NM	NM	NM	NM	NM	NM
1-Nov-10	76.0	-49.00	90.0	-35.43	NM	NM	NM	NM	NM	NM	NM	NM	NM	NM
24-Dec-10	72.0	-45.00	NM	NM	NM	NM	NM	NM	NM	NM	NM	NM	NM	NM
1-Jan-11	69.0	-42.00	NM	NM	NM	NM	NM	NM	NM	NM	NM	NM	NM	NM
1-Feb-11	63.0	-36.00	NM	NM	NM	NM	NM	NM	NM	NM	NM	NM	NM	NM
1-Mar-11	64.0	-37.00	NM	NM	NM	NM	NM	NM	NM	NM	NM	NM	NM	NM
1-Apr-11	65.0	-38.00	NM	NM	NM	NM	NM	NM	NM	NM	NM	NM	NM	NM
1-May-11	67.0	-40.00	NM	NM	NM	NM	NM	NM	NM	NM	NM	NM	NM	NM
7-Jun-11	65.0	-38.00	NM	NM	61.50	-12.25	70.19	-20.10	71.50	-20.30	111.15	-18.56	113.95	-21.43

NM = Not measured

CITY OF TRACY
GROUNDWATER LEVEL MEASUREMENTS

WELL 7 (BALL PARK)		WELL 8 (ASR)		MW-1A		MW-1B		MW-1C		MW-2A		MW-2B	
REFERENCE POINT(s)		REFERENCE POINT(s)		REFERENCE POINT(s)		REFERENCE POINT(s)		REFERENCE POINT(s)		REFERENCE POINT(s)		REFERENCE POINT(s)	
Revision Date	Elev. (ft)	Revision Date	Elev. (ft)	Revision Date	Elev. (ft)	Revision Date	Elev. (ft)	Revision Date	Elev. (ft)	Revision Date	Elev. (ft)	Revision Date	Elev. (ft)
21-Aug-01	*22*	*19-Dec-13*	*55*	*5-Dec-02*	*41.47*	*5-Dec-02*	*41.45*	*5-Dec-02*	*41.45*	*5-Dec-02*	*91.00*	*5-Dec-02*	*91.00*
13-Jul-04	27			*28-Jun-04*	49.251	*28-Jun-04*	50.094	*28-Jun-04*	51.203	*28-Jun-04*	92.586	*28-Jun-04*	92.525

DATE MEASURED	DEPTH TO WATER	WAT. SURF. ELEV. (ft)	DEPTH TO WATER	WAT. SURF. ELEV. (ft)	DEPTH TO WATER	WAT. SURF. ELEV. (ft)	DEPTH TO WATER	WAT. SURF. ELEV. (ft)	DEPTH TO WATER	WAT. SURF. ELEV. (ft)	DEPTH TO WATER	WAT. SURF. ELEV. (ft)	DEPTH TO WATER	WAT. SURF. ELEV. (ft)
1-Jul-11	71.0	-44.00	NM	NM	64.20	-14.95	74.50	-24.41	75.60	-24.40	114.80	-22.21	117.90	-25.38
9-Aug-11	74.0	-47.00	NM	NM	NM	NM	NM	NM	NM	NM	NM	NM	NM	NM
21-Sep-11	82.0	-55.00	NM	NM	NM	NM	NM	NM	NM	NM	NM	NM	NM	NM
24-Oct-11	73.0	-46.00	NM	NM	NM	NM	NM	NM	NM	NM	NM	NM	NM	NM
1-Nov-11	68.0	-41.00	NM	NM	NM	NM	NM	NM	NM	NM	NM	NM	NM	NM
6-Dec-11	67.0	-40.00	NM	NM	62.90	-13.65	70.21	-20.12	71.29	-20.09	113.39	-20.80	113.77	-21.25
1-Jan-12	60.0	-33.00	NM	NM	NM	NM	NM	NM	NM	NM	NM	NM	NM	NM
1-Feb-12	57.0	-30.00	NM	NM	NM	NM	NM	NM	NM	NM	NM	NM	NM	NM
22-Mar-12	56.0	-29.00	NM	NM	51.80	-2.55	58.55	-8.46	57.75	-6.55	103.00	-10.41	104.30	-11.78
1-Apr-12	55.0	-28.00	NM	NM	NM	NM	NM	NM	NM	NM	NM	NM	NM	NM
1-May-12	63.0	-36.00	NM	NM	NM	NM	NM	NM	NM	NM	NM	NM	NM	NM
18-Jun-12	62.0	-35.00	NM	NM	58.85	-9.60	68.13	-18.04	69.31	-18.11	109.79	-17.20	112.23	-19.71
1-Jul-12	72.0	-45.00	NM	NM	NM	NM	NM	NM	NM	NM	NM	NM	NM	NM
1-Aug-12	79.0	-52.00	NM	NM	NM	NM	NM	NM	NM	NM	NM	NM	NM	NM
19-Sep-12	86.0	-59.00	NM	NM	78.00	-28.75	88.75	-38.66	92.06	-40.86	122.24	-29.65	127.18	-34.66
1-Oct-12	76.0	-49.00	NM	NM	NM	NM	NM	NM	NM	NM	NM	NM	NM	NM
1-Nov-12	68.0	-41.00	NM	NM	NM	NM	NM	NM	NM	NM	NM	NM	NM	NM
1-Dec-12	68.0	-41.00	NM	NM	64.35	-15.10	73.37	-23.28	74.81	-23.61	111.13	-18.54	115.65	-23.13
1-Jan-13	67.0	-40.00	NM	NM	NM	NM	NM	NM	NM	NM	NM	NM	NM	NM
1-Feb-13	57.0	-30.00	NM	NM	53.01	-3.76	59.29	-9.20	58.53	-7.33	103.65	-11.06	105.22	-12.70
1-Mar-13	58.0	-31.00	NM	NM	NM	NM	NM	NM	NM	NM	NM	NM	NM	NM
11-Apr-13	59.0	-32.00	NM	NM	53.38	-4.13	59.75	-9.66	59.83	-8.63	104.51	-11.92	106.39	-13.87
1-May-13	72.0	-45.00	NM	NM	NM	NM	NM	NM	NM	NM	NM	NM	NM	NM
1-Jun-13	79.0	-52.00	NM	NM	NM	NM	NM	NM	NM	NM	NM	NM	NM	NM
1-Jul-13	74.0	-47.00	NM	NM	NM	NM	NM	NM	NM	NM	NM	NM	NM	NM
1-Aug-13	79.0	-52.00	NM	NM	NM	NM	NM	NM	NM	NM	NM	NM	NM	NM
16-Sep-13	79.0	-52.00	88.0	-33.43	70.23	-20.98	82.51	-32.42	84.47	-33.27	119.83	-27.24	128.43	-35.91

NM = Not measured

CITY OF TRACY
GROUNDWATER LEVEL MEASUREMENTS

	MW-2C		MW-3A		MW-3B		MW-3C		MW-4A		MW-4B		MW-4C	
	REFERENCE POINT(s)		REFERENCE POINT(s)		REFERENCE POINT(s)		REFERENCE POINT(s)		REFERENCE POINT(s)		REFERENCE POINT(s)		REFERENCE POINT(s)	
	Revision Date	Elev. (ft)	Revision Date	Elev. (ft)	Revision Date	Elev. (ft)	Revision Date	Elev. (ft)	Revision Date	Elev. (ft)	Revision Date	Elev. (ft)	Revision Date	Elev. (ft)
	5-Dec-02	*91.00*												
	28-Jun-04	92.533	*28-Jun-04*	*137.859*	*28-Jun-04*	*138.08*	*28-Jun-04*	*138.22*	*28-Jun-04*	*104.079*	*28-Jun-04*	*102.753*	*28-Jun-04*	*103.11*

DATE MEASURED	DEPTH TO WATER	WAT. SURF. ELEV. (ft)	DEPTH TO WATER	WAT. SURF. ELEV. (ft)	DEPTH TO WATER	WAT. SURF. ELEV. (ft)	DEPTH TO WATER	WAT. SURF. ELEV. (ft)	DEPTH TO WATER	WAT. SURF. ELEV. (ft)	DEPTH TO WATER	WAT. SURF. ELEV. (ft)	DEPTH TO WATER	WAT. SURF. ELEV. (ft)
15-Jan-01														
15-Feb-01														
18-Mar-01														
18-Apr-01														
19-May-01														
19-Jun-01														
20-Jul-01														
20-Aug-01														
20-Sep-01														
29-Oct-01														
21-Nov-01														
22-Dec-01														
16-Jan-02														
22-Feb-02														
28-Mar-02														
25-Apr-02														
24-May-02														
19-Jun-02														
27-Jul-02														
29-Aug-02														
24-Sep-02														
28-Oct-02														
28-Nov-02														
5-Dec-02	134.18	-41.65												
30-Jan-03	NM	NM												
24-Feb-03	NM	NM												
16-Mar-03	NM	NM												
23-Apr-03	NM	NM												
17-May-03	NM	NM												
17-Jun-03	NM	NM												
10-Jul-03	147.50	-54.97												
18-Aug-03	149.94	-57.41												
11-Sep-03	NM	NM												
14-Oct-03	NM	NM												
10-Nov-03	136.03	-43.50												
10-Dec-03	136.13	-43.60												
20-Jan-04	134.49	-41.96												
10-Feb-04	131.42	-38.89												
15-Mar-04	129.31	-36.78												
22-Apr-04	131.91	-39.38	169.48	-31.62	176.19	-38.11	177.12	-38.90	139.08	-35.00	142.21	-39.46	142.21	-39.10
10-May-04	138.01	-45.48	170.81	-32.95	181.63	-43.55	181.58	-43.36	142.91	-38.83	148.23	-45.48	148.39	-45.28
14-Jun-04	144.46	-51.93	173.66	-35.80	187.13	-49.05	186.69	-48.47	148.44	-44.36	155.13	-52.38	154.71	-51.60

NM = Not measured

CITY OF TRACY
GROUNDWATER LEVEL MEASUREMENTS

	MW-2C		MW-3A		MW-3B		MW-3C		MW-4A		MW-4B		MW-4C	
	REFERENCE POINT(s)		REFERENCE POINT(s)		REFERENCE POINT(s)		REFERENCE POINT(s)		REFERENCE POINT(s)		REFERENCE POINT(s)		REFERENCE POINT(s)	
	Revision Date	Elev. (ft)	Revision Date	Elev. (ft)	Revision Date	Elev. (ft)	Revision Date	Elev. (ft)	Revision Date	Elev. (ft)	Revision Date	Elev. (ft)	Revision Date	Elev. (ft)
	5-Dec-02	*91.00*												
	28-Jun-04	92.533	*28-Jun-04*	*137.859*	*28-Jun-04*	*138.08*	*28-Jun-04*	*138.22*	*28-Jun-04*	*104.079*	*28-Jun-04*	*102.753*	*28-Jun-04*	*103.11*

DATE MEASURED	DEPTH TO WATER	WAT. SURF. ELEV. (ft)	DEPTH TO WATER	WAT. SURF. ELEV. (ft)	DEPTH TO WATER	WAT. SURF. ELEV. (ft)	DEPTH TO WATER	WAT. SURF. ELEV. (ft)	DEPTH TO WATER	WAT. SURF. ELEV. (ft)	DEPTH TO WATER	WAT. SURF. ELEV. (ft)	DEPTH TO WATER	WAT. SURF. ELEV. (ft)
20-Jul-04	150.42	-57.89	177.28	-39.42	194.01	-55.93	194.03	-55.81	154.05	-49.97	161.96	-59.21	162.09	-58.98
16-Aug-04	152.01	-59.48	179.24	-41.38	196.33	-58.25	195.87	-57.65	157.42	-53.34	164.29	-61.54	164.24	-61.13
14-Sep-04	152.81	-60.28	180.19	-42.33	196.43	-58.35	196.51	-58.29	157.26	-53.18	163.07	-60.32	162.07	-58.96
21-Oct-04	142.81	-50.28	177.73	-39.87	187.32	-49.24	187.83	-49.61	149.18	-45.10	150.84	-48.09	150.74	-47.63
9-Nov-04	135.66	-43.13	175.75	-37.89	182.21	-44.13	182.90	-44.68	142.34	-38.26	144.54	-41.79	144.14	-41.03
3-Dec-04	132.18	-39.65	173.74	-35.88	178.63	-40.55	179.64	-41.42	138.18	-34.10	140.80	-38.05	140.33	-37.22
24-Jan-05	133.04	-40.51	172.39	-34.53	179.31	-41.23	181.40	-43.18	135.37	-31.29	142.07	-39.32	141.42	-38.31
22-Feb-05	130.27	-37.74	171.05	-33.19	175.83	-37.75	177.01	-38.79	133.46	-29.38	138.88	-36.13	138.28	-35.17
15-Mar-05	125.96	-33.43	169.18	-31.32	172.21	-34.13	173.47	-35.25	131.61	-27.53	134.38	-31.63	133.88	-30.77
22-Apr-05	126.76	-34.23	168.48	-30.62	172.68	-34.60	173.54	-35.32	130.75	-26.67	135.97	-33.22	135.35	-32.24
20-May-05	129.06	-36.53	168.74	-30.88	174.44	-36.36	175.53	-37.31	134.62	-30.54	138.13	-35.38	137.92	-34.81
23-Jun-05	137.81	-45.28	171.32	-33.46	181.27	-43.19	181.67	-43.45	142.51	-38.43	147.99	-45.24	147.71	-44.60
26-Jul-05	147.16	-54.63	174.82	-36.96	190.14	-52.06	189.99	-51.77	149.63	-45.55	158.51	-55.76	158.13	-55.02
15-Aug-05	146.71	-54.18	176.76	-38.90	190.90	-52.82	191.47	-53.25	153.19	-49.11	156.71	-53.96	158.21	-55.10
14-Sep-05	142.62	-50.09	176.75	-38.89	188.46	-50.38	188.87	-50.65	150.83	-46.75	153.28	-50.53	153.61	-50.50
11-Oct-05	138.77	-46.24	175.38	-37.52	184.76	-46.68	185.64	-47.42	145.04	-40.96	148.30	-45.55	148.21	-45.10
4-Nov-05	134.00	-41.47	173.66	-35.80	180.22	-42.14	180.82	-42.60	139.72	-35.64	143.49	-40.74	142.94	-39.83
7-Dec-05	131.18	-38.65	171.43	-33.57	176.62	-38.54	177.41	-39.19	135.08	-31.00	139.91	-37.16	139.04	-35.93
1-Jan-06	NM	NM	NM	NM	NM	NM	NM	NM	NM	NM	NM	NM	NM	NM
15-Feb-06	124.05	-31.52	166.68	-28.82	169.34	-31.26	170.29	-32.07	128.73	-24.65	132.21	-29.46	131.50	-28.39
10-Mar-06	121.54	-29.01	165.48	-27.62	167.12	-29.04	168.09	-29.87	128.05	-23.97	129.89	-27.14	129.47	-26.36
26-Apr-06	117.29	-24.76	162.68	-24.82	163.34	-25.26	NM	NM	123.16	-19.08	125.86	-23.11	125.32	-22.21
1-May-06	NM	NM	NM	NM	NM	NM	NM	NM	NM	NM	NM	NM	NM	NM
1-Jun-06	NM	NM	NM	NM	NM	NM	NM	NM	NM	NM	NM	NM	NM	NM
1-Jul-06	NM	NM	NM	NM	NM	NM	NM	NM	NM	NM	NM	NM	NM	NM
1-Aug-06	NM	NM	NM	NM	NM	NM	NM	NM	NM	NM	NM	NM	NM	NM
1-Sep-06	NM	NM	NM	NM	NM	NM	NM	NM	NM	NM	NM	NM	NM	NM
1-Oct-06	NM	NM	NM	NM	NM	NM	NM	NM	NM	NM	NM	NM	NM	NM
30-Nov-06	NM	NM	NM	NM	NM	NM	NM	NM	NM	NM	NM	NM	NM	NM
1-Dec-06	NM	NM	NM	NM	NM	NM	NM	NM	NM	NM	NM	NM	NM	NM
1-Jan-07	NM	NM	NM	NM	NM	NM	NM	NM	NM	NM	NM	NM	NM	NM
1-Feb-07	NM	NM	NM	NM	NM	NM	NM	NM	NM	NM	NM	NM	NM	NM
16-Mar-07	120.32	-27.79	162.19	-24.33	165.98	-27.90	166.84	-28.62	124.02	-19.94	129.03	-26.28	128.39	-25.28
25-Apr-07	130.07	-37.54	165.30	-27.44	174.83	-36.75	175.83	-37.61	135.93	-31.85	143.24	-40.49	143.14	-40.03
30-May-07	NM	NM	NM	NM	NM	NM	NM	NM	NM	NM	NM	NM	NM	NM
1-Jun-07	NM	NM	NM	NM	NM	NM	NM	NM	NM	NM	NM	NM	NM	NM
25-Jul-07	136.67	-44.14	169.89	-32.03	181.10	-43.02	181.21	-42.99	144.48	-40.40	147.28	-44.53	147.79	-44.68
1-Aug-07	NM	NM	NM	NM	NM	NM	NM	NM	NM	NM	NM	NM	NM	NM
1-Sep-07	NM	NM	NM	NM	NM	NM	NM	NM	NM	NM	NM	NM	NM	NM
16-Oct-07	NM	NM	NM	NM	NM	NM	NM	NM	NM	NM	NM	NM	NM	NM
11-Nov-07	125.74	-33.21	167.01	-29.15	171.96	-33.88	172.72	-34.50	132.64	-28.56	134.89	-32.14	134.77	-31.66
1-Dec-07	NM	NM	NM	NM	NM	NM	NM	NM	NM	NM	NM	NM	NM	NM

NM = Not measured

CITY OF TRACY
GROUNDWATER LEVEL MEASUREMENTS

	MW-2C		MW-3A		MW-3B		MW-3C		MW-4A		MW-4B		MW-4C	
	REFERENCE POINT(s)		REFERENCE POINT(s)		REFERENCE POINT(s)		REFERENCE POINT(s)		REFERENCE POINT(s)		REFERENCE POINT(s)		REFERENCE POINT(s)	
	Revision Date	Elev. (ft)	Revision Date	Elev. (ft)	Revision Date	Elev. (ft)	Revision Date	Elev. (ft)	Revision Date	Elev. (ft)	Revision Date	Elev. (ft)	Revision Date	Elev. (ft)
	5-Dec-02	*91.00*												
	28-Jun-04	92.533	*28-Jun-04*	*137.859*	*28-Jun-04*	*138.08*	*28-Jun-04*	*138.22*	*28-Jun-04*	*104.079*	*28-Jun-04*	*102.753*	*28-Jun-04*	*103.11*

DATE MEASURED	DEPTH TO WATER	WAT. SURF. ELEV. (ft)	DEPTH TO WATER	WAT. SURF. ELEV. (ft)	DEPTH TO WATER	WAT. SURF. ELEV. (ft)	DEPTH TO WATER	WAT. SURF. ELEV. (ft)	DEPTH TO WATER	WAT. SURF. ELEV. (ft)	DEPTH TO WATER	WAT. SURF. ELEV. (ft)	DEPTH TO WATER	WAT. SURF. ELEV. (ft)
1-Jan-08	NM	NM	NM	NM	NM	NM	NM	NM	NM	NM	NM	NM	NM	NM
1-Feb-08	NM	NM	NM	NM	NM	NM	NM	NM	NM	NM	NM	NM	NM	NM
10-Mar-08	119.54	-27.01	161.37	-23.51	165.66	-27.58	166.68	-28.46	123.68	-19.60	129.34	-26.59	128.85	-25.74
1-Apr-08	NM	NM	NM	NM	NM	NM	NM	NM	NM	NM	NM	NM	NM	NM
1-May-08	NM	NM	NM	NM	NM	NM	NM	NM	NM	NM	NM	NM	NM	NM
26-Jun-08	134.42	-41.89	166.78	-28.92	178.21	-40.13	178.73	-40.51	146.68	-42.60	145.77	-43.02	142.69	-39.58
8-Jul-08	137.30	-44.77	168.55	-30.69	182.07	-43.99	183.00	-44.78	142.21	-38.13	149.74	-46.99	150.42	-47.31
1-Aug-08	NM	NM	NM	NM	NM	NM	NM	NM	NM	NM	NM	NM	NM	NM
1-Sep-08	NM	NM	NM	NM	NM	NM	NM	NM	NM	NM	NM	NM	NM	NM
1-Oct-08	NM	NM	NM	NM	NM	NM	NM	NM	NM	NM	NM	NM	NM	NM
1-Nov-08	NM	NM	NM	NM	NM	NM	NM	NM	NM	NM	NM	NM	NM	NM
1-Dec-08	122.81	-30.28	165.15	-27.29	169.16	-31.08	170.09	-31.87	128.42	-24.34	131.59	-28.84	131.29	-28.18
1-Jan-09	120.12	-27.59	163.38	-25.52	167.28	-29.20	168.68	-30.46	124.80	-20.72	129.43	-26.68	128.76	-25.65
1-Feb-09	NM	NM	NM	NM	NM	NM	NM	NM	NM	NM	NM	NM	NM	NM
1-Mar-09	NM	NM	NM	NM	NM	NM	NM	NM	NM	NM	NM	NM	NM	NM
1-Apr-09	NM	NM	NM	NM	NM	NM	NM	NM	NM	NM	NM	NM	NM	NM
1-May-09	NM	NM	NM	NM	NM	NM	NM	NM	NM	NM	NM	NM	NM	NM
1-Jun-09	143.16	-50.63	172.98	-35.12	189.79	-51.71	193.22	-55.00	144.09	-40.01	152.39	-49.64	153.36	-50.25
1-Jul-09	NM	NM	NM	NM	NM	NM	NM	NM	NM	NM	NM	NM	NM	NM
1-Aug-09	NM	NM	NM	NM	NM	NM	NM	NM	NM	NM	NM	NM	NM	NM
1-Sep-09	NM	NM	NM	NM	NM	NM	NM	NM	NM	NM	NM	NM	NM	NM
1-Oct-09	NM	NM	NM	NM	NM	NM	NM	NM	NM	NM	NM	NM	NM	NM
1-Nov-09	NM	NM	NM	NM	NM	NM	NM	NM	NM	NM	NM	NM	NM	NM
1-Dec-09	NM	NM	NM	NM	NM	NM	NM	NM	NM	NM	NM	NM	NM	NM
1-Jan-10	NM	NM	NM	NM	NM	NM	NM	NM	NM	NM	NM	NM	NM	NM
1-Feb-10	NM	NM	NM	NM	NM	NM	NM	NM	NM	NM	NM	NM	NM	NM
1-Mar-10	NM	NM	NM	NM	NM	NM	NM	NM	NM	NM	NM	NM	NM	NM
1-Apr-10	NM	NM	NM	NM	NM	NM	NM	NM	NM	NM	NM	NM	NM	NM
1-May-10	NM	NM	NM	NM	NM	NM	NM	NM	NM	NM	NM	NM	NM	NM
1-Jun-10	NM	NM	NM	NM	NM	NM	NM	NM	NM	NM	NM	NM	NM	NM
1-Jul-10	NM	NM	NM	NM	NM	NM	NM	NM	NM	NM	NM	NM	NM	NM
1-Aug-10	NM	NM	NM	NM	NM	NM	NM	NM	NM	NM	NM	NM	NM	NM
1-Sep-10	NM	NM	NM	NM	NM	NM	NM	NM	NM	NM	NM	NM	NM	NM
1-Oct-10	NM	NM	NM	NM	NM	NM	NM	NM	NM	NM	NM	NM	NM	NM
1-Nov-10	NM	NM	NM	NM	NM	NM	NM	NM	NM	NM	NM	NM	NM	NM
24-Dec-10	NM	NM	NM	NM	NM	NM	NM	NM	NM	NM	NM	NM	NM	NM
1-Jan-11	NM	NM	NM	NM	NM	NM	NM	NM	NM	NM	NM	NM	NM	NM
1-Feb-11	NM	NM	NM	NM	NM	NM	NM	NM	NM	NM	NM	NM	NM	NM
1-Mar-11	NM	NM	NM	NM	NM	NM	NM	NM	NM	NM	NM	NM	NM	NM
1-Apr-11	NM	NM	NM	NM	NM	NM	NM	NM	NM	NM	NM	NM	NM	NM
1-May-11	NM	NM	NM	NM	NM	NM	NM	NM	NM	NM	NM	NM	NM	NM
7-Jun-11	114.00	-21.47	155.50	-17.64	160.00	-21.92	160.20	-21.98	121.10	-17.02	124.60	-21.85	125.60	-22.49

NM = Not measured

CITY OF TRACY
GROUNDWATER LEVEL MEASUREMENTS

	MW-2C		MW-3A		MW-3B		MW-3C		MW-4A		MW-4B		MW-4C	
	REFERENCE POINT(s)		REFERENCE POINT(s)		REFERENCE POINT(s)		REFERENCE POINT(s)		REFERENCE POINT(s)		REFERENCE POINT(s)		REFERENCE POINT(s)	
	Revision Date	Elev. (ft)	Revision Date	Elev. (ft)	Revision Date	Elev. (ft)	Revision Date	Elev. (ft)	Revision Date	Elev. (ft)	Revision Date	Elev. (ft)	Revision Date	Elev. (ft)
	5-Dec-02	*91.00*												
	28-Jun-04	92.533	*28-Jun-04*	*137.859*	*28-Jun-04*	*138.08*	*28-Jun-04*	*138.22*	*28-Jun-04*	*104.079*	*28-Jun-04*	*102.753*	*28-Jun-04*	*103.11*

DATE MEASURED	DEPTH TO WATER	WAT. SURF. ELEV. (ft)	DEPTH TO WATER	WAT. SURF. ELEV. (ft)	DEPTH TO WATER	WAT. SURF. ELEV. (ft)	DEPTH TO WATER	WAT. SURF. ELEV. (ft)	DEPTH TO WATER	WAT. SURF. ELEV. (ft)	DEPTH TO WATER	WAT. SURF. ELEV. (ft)	DEPTH TO WATER	WAT. SURF. ELEV. (ft)
1-Jul-11	117.90	-25.37	156.80	-18.94	163.10	-25.02	163.30	-25.08	125.00	-20.92	129.90	-27.15	130.90	-27.79
9-Aug-11	NM	NM	NM	NM	NM	NM	NM	NM	NM	NM	NM	NM	NM	NM
21-Sep-11	NM	NM	NM	NM	NM	NM	NM	NM	NM	NM	NM	NM	NM	NM
24-Oct-11	NM	NM	NM	NM	NM	NM	NM	NM	NM	NM	NM	NM	NM	NM
1-Nov-11	NM	NM	NM	NM	NM	NM	NM	NM	NM	NM	NM	NM	NM	NM
6-Dec-11	110.15	-17.62	155.62	-17.76	159.88	-21.80	160.26	-22.04	120.10	-16.02	123.39	-20.64	123.16	-20.05
1-Jan-12	NM	NM	NM	NM	NM	NM	NM	NM	NM	NM	NM	NM	NM	NM
1-Feb-12	NM	NM	NM	NM	NM	NM	NM	NM	NM	NM	NM	NM	NM	NM
22-Mar-12	104.70	-12.17	155.00	-17.14	151.10	-13.02	152.20	-13.98	112.90	-8.82	114.30	-11.55	115.10	-11.99
1-Apr-12	NM	NM	NM	NM	NM	NM	NM	NM	NM	NM	NM	NM	NM	NM
1-May-12	NM	NM	NM	NM	NM	NM	NM	NM	NM	NM	NM	NM	NM	NM
18-Jun-12	112.36	-19.83	151.75	-13.89	157.68	-19.60	157.95	-19.73	121.35	-17.27	124.00	-21.25	125.41	-22.30
1-Jul-12	NM	NM	NM	NM	NM	NM	NM	NM	NM	NM	NM	NM	NM	NM
1-Aug-12	NM	NM	NM	NM	NM	NM	NM	NM	NM	NM	NM	NM	NM	NM
19-Sep-12	126.57	-34.04	159.30	-21.44	170.75	-32.67	169.60	-31.38	135.76	-31.68	139.46	-36.71	139.71	-36.60
1-Oct-12	NM	NM	NM	NM	NM	NM	NM	NM	NM	NM	NM	NM	NM	NM
1-Nov-12	NM	NM	NM	NM	NM	NM	NM	NM	NM	NM	NM	NM	NM	NM
1-Dec-12	115.21	-22.68	155.48	-17.62	161.64	-23.56	161.86	-23.64	121.43	-17.35	125.02	-22.27	124.78	-21.67
1-Jan-13	NM	NM	NM	NM	NM	NM	NM	NM	NM	NM	NM	NM	NM	NM
1-Feb-13	105.32	-12.79	150.53	-12.67	152.06	-13.98	153.18	-14.96	112.30	-8.22	114.51	-11.76	115.41	-12.30
1-Mar-13	NM	NM	NM	NM	NM	NM	NM	NM	NM	NM	NM	NM	NM	NM
11-Apr-13	106.94	-14.41	150.02	-12.16	152.94	-14.86	154.31	-16.09	116.36	-12.28	116.96	-14.21	118.41	-15.30
1-May-13	NM	NM	NM	NM	NM	NM	NM	NM	NM	NM	NM	NM	NM	NM
1-Jun-13	NM	NM	NM	NM	NM	NM	NM	NM	NM	NM	NM	NM	NM	NM
1-Jul-13	NM	NM	NM	NM	NM	NM	NM	NM	NM	NM	NM	NM	NM	NM
1-Aug-13	NM	NM	NM	NM	NM	NM	NM	NM	NM	NM	NM	NM	NM	NM
16-Sep-13	129.48	-36.95	161.59	-23.73	174.94	-36.86	177.73	-39.51	133.44	-29.36	138.89	-36.14	139.89	-36.78

NM = Not measured

CITY OF TRACY
GROUNDWATER LEVEL MEASUREMENTS

MW-5A		MW-5B		MW-5C		MW-6A		MW-6B		MW-6C	
REFERENCE POINT(s)		REFERENCE POINT(s)		REFERENCE POINT(s)		REFERENCE POINT(s)		REFERENCE POINT(s)		REFERENCE POINT(s)	
Revision Date	Elev. (ft)	Revision Date	Elev. (ft)	Revision Date	Elev. (ft)	Revision Date	Elev. (ft)	Revision Date	Elev. (ft)	Revision Date	Elev. (ft)
5-Dec-02	*47*	*5-Dec-02*	*49*	*5-Dec-02*	*47*						
28-Jun-04	48.394	*28-Jun-04*	47.824	*28-Jun-04*	48.062	*28-Jun-04*	*26.52*	*28-Jun-04*	*26.653*	*28-Jun-04*	*26.789*

DATE MEASURED	DEPTH TO WATER	WAT. SURF. ELEV. (ft)	DEPTH TO WATER	WAT. SURF. ELEV. (ft)	DEPTH TO WATER	WAT. SURF. ELEV. (ft)	DEPTH TO WATER	WAT. SURF. ELEV. (ft)	DEPTH TO WATER	WAT. SURF. ELEV. (ft)	DEPTH TO WATER	WAT. SURF. ELEV. (ft)
15-Jan-01												
15-Feb-01												
18-Mar-01												
18-Apr-01												
19-May-01												
19-Jun-01												
20-Jul-01												
20-Aug-01												
20-Sep-01												
29-Oct-01												
21-Nov-01												
22-Dec-01												
16-Jan-02												
22-Feb-02												
28-Mar-02												
25-Apr-02												
24-May-02												
19-Jun-02												
27-Jul-02												
29-Aug-02												
24-Sep-02												
28-Oct-02												
28-Nov-02												
5-Dec-02	75.80	-27.41	77.65	-29.83	76.47	-28.41						
30-Jan-03	NM	NM	NM	NM	NM	NM						
24-Feb-03	NM	NM	NM	NM	NM	NM						
16-Mar-03	NM	NM	NM	NM	NM	NM						
23-Apr-03	NM	NM	NM	NM	NM	NM						
17-May-03	NM	NM	NM	NM	NM	NM						
17-Jun-03	NM	NM	NM	NM	NM	NM						
10-Jul-03	96.79	-48.40	99.74	-51.92	95.40	-47.34						
18-Aug-03	NM	NM	NM	NM	NM	NM						
11-Sep-03	NM	NM	NM	NM	NM	NM						
14-Oct-03	NM	NM	NM	NM	NM	NM						
10-Nov-03	79.92	-31.53	81.94	-34.12	80.33	-32.27						
10-Dec-03	80.23	-31.84	81.29	-33.47	78.23	-30.17						
20-Jan-04	74.85	-26.46	78.81	-30.99	77.32	-29.26						
10-Feb-04	74.00	-25.61	77.48	-29.66	76.14	-28.08						
15-Mar-04	71.55	-23.16	75.10	-27.28	73.90	-25.84						
22-Apr-04	82.72	-34.33	84.23	-36.41	83.98	-35.92	56.08	-29.56	63.70	-37.05	68.83	-42.04
10-May-04	86.98	-38.59	89.75	-41.93	87.72	-39.66	59.82	-33.30	73.39	-46.74	72.81	-46.02
14-Jun-04	92.39	-44.00	96.12	-48.30	92.73	-44.67	65.52	-39.00	84.11	-57.46	81.24	-54.45

NM = Not measured

CITY OF TRACY
GROUNDWATER LEVEL MEASUREMENTS

MW-5A		MW-5B		MW-5C		MW-6A		MW-6B		MW-6C	
REFERENCE POINT(s)		REFERENCE POINT(s)		REFERENCE POINT(s)		REFERENCE POINT(s)		REFERENCE POINT(s)		REFERENCE POINT(s)	
Revision Date	Elev. (ft)	Revision Date	Elev. (ft)	Revision Date	Elev. (ft)	Revision Date	Elev. (ft)	Revision Date	Elev. (ft)	Revision Date	Elev. (ft)
5-Dec-02	*47*	*5-Dec-02*	*49*	*5-Dec-02*	*47*						
28-Jun-04	48.394	*28-Jun-04*	47.824	*28-Jun-04*	48.062	*28-Jun-04*	*26.52*	*28-Jun-04*	*26.653*	*28-Jun-04*	*26.789*

DATE MEASURED	DEPTH TO WATER	WAT. SURF. ELEV. (ft)	DEPTH TO WATER	WAT. SURF. ELEV. (ft)	DEPTH TO WATER	WAT. SURF. ELEV. (ft)	DEPTH TO WATER	WAT. SURF. ELEV. (ft)	DEPTH TO WATER	WAT. SURF. ELEV. (ft)	DEPTH TO WATER	WAT. SURF. ELEV. (ft)
20-Jul-04	99.01	-50.62	102.49	-54.67	98.78	-50.72	70.66	-44.14	86.69	-60.04	84.71	-57.92
16-Aug-04	104.30	-55.91	106.02	-58.20	101.56	-53.50	72.84	-46.32	90.54	-63.89	86.58	-59.79
14-Sep-04	100.36	-51.97	102.59	-54.77	98.89	-50.83	74.34	-47.82	92.27	-65.62	85.91	-59.12
21-Oct-04	88.43	-40.04	90.63	-42.81	88.91	-40.85	66.66	-40.14	72.91	-46.26	69.91	-43.12
9-Nov-04	80.82	-32.43	81.85	-34.03	80.96	-32.90	60.77	-34.25	64.64	-37.99	62.04	-35.25
3-Dec-04	76.27	-27.88	77.97	-30.15	77.26	-29.20	56.81	-30.29	60.92	-34.27	58.83	-32.04
24-Jan-05	73.21	-24.82	72.19	-24.37	76.16	-28.10	53.95	-27.43	60.45	-33.80	59.76	-32.97
22-Feb-05	71.17	-22.78	76.14	-28.32	75.04	-26.98	53.28	-26.76	61.29	-34.64	60.58	-33.79
15-Mar-05	69.09	-20.70	71.56	-23.74	70.91	-22.85	50.59	-24.07	55.63	-28.98	53.74	-26.95
22-Apr-05	71.71	-23.32	74.98	-27.16	73.48	-25.42	50.64	-24.12	62.09	-35.44	58.01	-31.22
20-May-05	74.73	-26.34	76.48	-28.66	75.28	-27.22	52.98	-26.46	60.35	-33.70	57.18	-30.39
23-Jun-05	84.05	-35.66	87.96	-40.14	84.54	-36.48	59.50	-32.98	71.94	-45.29	70.38	-43.59
26-Jul-05	98.80	-50.41	100.62	-52.80	95.45	-47.39	67.29	-40.77	89.77	-63.12	82.51	-55.72
15-Aug-05	101.29	-52.90	100.90	-53.08	96.79	-48.73	68.29	-41.77	79.73	-53.08	75.98	-49.19
14-Sep-05	94.73	-46.34	93.73	-45.91	91.81	-43.75	66.68	-40.16	72.93	-46.28	69.90	-43.11
11-Oct-05	86.73	-38.34	87.12	-39.30	80.72	-32.66	62.29	-35.77	68.72	-42.07	65.19	-38.40
4-Nov-05	78.98	-30.59	81.03	-33.21	79.54	-31.48	58.10	-31.58	63.93	-37.28	61.84	-35.05
7-Dec-05	73.89	-25.50	77.15	-29.33	75.24	-27.18	54.66	-28.14	61.97	-35.32	60.04	-33.25
1-Jan-06	NM	NM	NM	NM	NM	NM	NM	NM	NM	NM	NM	NM
15-Feb-06	67.07	-18.68	69.71	-21.89	69.01	-20.95	48.84	-22.32	54.94	-28.29	53.47	-26.68
10-Mar-06	65.34	-16.95	67.76	-19.94	67.14	-19.08	47.29	-20.77	51.61	-24.96	50.13	-23.34
26-Apr-06	61.54	-13.15	64.08	-16.26	63.59	-15.53	43.19	-16.67	47.51	-20.86	46.42	-19.63
1-May-06	NM	NM	NM	NM	NM	NM	NM	NM	NM	NM	NM	NM
1-Jun-06	NM	NM	NM	NM	NM	NM	NM	NM	NM	NM	NM	NM
1-Jul-06	NM	NM	NM	NM	NM	NM	NM	NM	NM	NM	NM	NM
1-Aug-06	NM	NM	NM	NM	NM	NM	NM	NM	NM	NM	NM	NM
1-Sep-06	NM	NM	NM	NM	NM	NM	NM	NM	NM	NM	NM	NM
1-Oct-06	NM	NM	NM	NM	NM	NM	NM	NM	NM	NM	NM	NM
30-Nov-06	NM	NM	NM	NM	NM	NM	NM	NM	NM	NM	NM	NM
1-Dec-06	NM	NM	NM	NM	NM	NM	NM	NM	NM	NM	NM	NM
1-Jan-07	NM	NM	NM	NM	NM	NM	NM	NM	NM	NM	NM	NM
1-Feb-07	NM	NM	NM	NM	NM	NM	NM	NM	NM	NM	NM	NM
16-Mar-07	64.04	-15.65	66.63	-18.81	65.86	-17.80	45.42	-18.90	52.75	-26.10	50.30	-23.51
25-Apr-07	80.02	-31.63	81.69	-33.87	77.45	-29.39	54.90	-28.38	66.24	-39.59	65.84	-39.05
30-May-07	NM	NM	NM	NM	NM	NM	NM	NM	NM	NM	NM	NM
1-Jun-07	NM	NM	NM	NM	NM	NM	NM	NM	NM	NM	NM	NM
25-Jul-07	90.99	-42.60	90.19	-42.37	87.30	-39.24	63.01	-36.49	73.58	-46.93	66.72	-39.93
1-Aug-07	NM	NM	NM	NM	NM	NM	NM	NM	NM	NM	NM	NM
1-Sep-07	NM	NM	NM	NM	NM	NM	NM	NM	NM	NM	NM	NM
16-Oct-07	NM	NM	NM	NM	NM	NM	NM	NM	NM	NM	NM	NM
11-Nov-07	73.94	-25.55	74.04	-26.22	73.51	-25.45	52.79	-26.27	55.53	-28.88	53.29	-26.50
1-Dec-07	NM	NM	NM	NM	NM	NM	NM	NM	NM	NM	NM	NM

NM = Not measured

CITY OF TRACY
GROUNDWATER LEVEL MEASUREMENTS

MW-5A		MW-5B		MW-5C		MW-6A		MW-6B		MW-6C	
REFERENCE POINT(s)		REFERENCE POINT(s)		REFERENCE POINT(s)		REFERENCE POINT(s)		REFERENCE POINT(s)		REFERENCE POINT(s)	
Revision Date	Elev. (ft)	Revision Date	Elev. (ft)	Revision Date	Elev. (ft)	Revision Date	Elev. (ft)	Revision Date	Elev. (ft)	Revision Date	Elev. (ft)
5-Dec-02	*47*	*5-Dec-02*	*49*	*5-Dec-02*	*47*						
28-Jun-04	48.394	*28-Jun-04*	47.824	*28-Jun-04*	48.062	*28-Jun-04*	*26.52*	*28-Jun-04*	*26.653*	*28-Jun-04*	*26.789*

DATE MEASURED	DEPTH TO WATER	WAT. SURF. ELEV. (ft)	DEPTH TO WATER	WAT. SURF. ELEV. (ft)	DEPTH TO WATER	WAT. SURF. ELEV. (ft)	DEPTH TO WATER	WAT. SURF. ELEV. (ft)	DEPTH TO WATER	WAT. SURF. ELEV. (ft)	DEPTH TO WATER	WAT. SURF. ELEV. (ft)
1-Jan-08	NM	NM	NM	NM	NM	NM	NM	NM	NM	NM	NM	NM
1-Feb-08	NM	NM	NM	NM	NM	NM	NM	NM	NM	NM	NM	NM
10-Mar-08	67.75	-19.36	70.64	-22.82	68.33	-20.27	44.64	-18.12	50.48	-23.83	50.44	-23.65
1-Apr-08	NM	NM	NM	NM	NM	NM	NM	NM	NM	NM	NM	NM
1-May-08	NM	NM	NM	NM	NM	NM	NM	NM	NM	NM	NM	NM
26-Jun-08	95.32	-46.93	NM	NM	85.97	-37.91	59.01	-32.49	64.58	-37.93	62.43	-35.64
8-Jul-08	100.93	-52.54	96.93	-49.11	89.92	-41.86	60.67	-34.15	71.61	-44.96	66.71	-39.92
1-Aug-08	NM	NM	NM	NM	NM	NM	NM	NM	NM	NM	NM	NM
1-Sep-08	NM	NM	NM	NM	NM	NM	NM	NM	NM	NM	NM	NM
1-Oct-08	NM	NM	NM	NM	NM	NM	NM	NM	NM	NM	NM	NM
1-Nov-08	NM	NM	NM	NM	NM	NM	NM	NM	NM	NM	NM	NM
1-Dec-08	69.04	-20.65	69.80	-21.98	69.71	-21.65	49.09	-22.57	52.02	-25.37	50.23	-23.44
1-Jan-09	65.39	-17.00	66.96	-19.14	66.66	-18.60	45.95	-19.43	49.11	-22.46	45.57	-18.78
1-Feb-09	NM	NM	NM	NM	NM	NM	NM	NM	NM	NM	NM	NM
1-Mar-09	NM	NM	NM	NM	NM	NM	NM	NM	NM	NM	NM	NM
1-Apr-09	NM	NM	NM	NM	NM	NM	NM	NM	NM	NM	NM	NM
1-May-09	NM	NM	NM	NM	NM	NM	NM	NM	NM	NM	NM	NM
1-Jun-09	95.35	-46.96	93.32	-45.50	88.80	-40.74	59.10	-32.58	66.29	-39.64	62.73	-35.94
1-Jul-09	NM	NM	NM	NM	NM	NM	NM	NM	NM	NM	NM	NM
1-Aug-09	NM	NM	NM	NM	NM	NM	NM	NM	NM	NM	NM	NM
1-Sep-09	NM	NM	NM	NM	NM	NM	NM	NM	NM	NM	NM	NM
1-Oct-09	NM	NM	NM	NM	NM	NM	NM	NM	NM	NM	NM	NM
1-Nov-09	NM	NM	NM	NM	NM	NM	NM	NM	NM	NM	NM	NM
1-Dec-09	NM	NM	NM	NM	NM	NM	NM	NM	NM	NM	NM	NM
1-Jan-10	NM	NM	NM	NM	NM	NM	NM	NM	NM	NM	NM	NM
1-Feb-10	NM	NM	NM	NM	NM	NM	NM	NM	NM	NM	NM	NM
1-Mar-10	NM	NM	NM	NM	NM	NM	NM	NM	NM	NM	NM	NM
1-Apr-10	NM	NM	NM	NM	NM	NM	NM	NM	NM	NM	NM	NM
1-May-10	NM	NM	NM	NM	NM	NM	NM	NM	NM	NM	NM	NM
1-Jun-10	NM	NM	NM	NM	NM	NM	NM	NM	NM	NM	NM	NM
1-Jul-10	NM	NM	NM	NM	NM	NM	NM	NM	NM	NM	NM	NM
1-Aug-10	NM	NM	NM	NM	NM	NM	NM	NM	NM	NM	NM	NM
1-Sep-10	NM	NM	NM	NM	NM	NM	NM	NM	NM	NM	NM	NM
1-Oct-10	NM	NM	NM	NM	NM	NM	NM	NM	NM	NM	NM	NM
1-Nov-10	NM	NM	NM	NM	NM	NM	NM	NM	NM	NM	NM	NM
24-Dec-10	NM	NM	NM	NM	NM	NM	NM	NM	NM	NM	NM	NM
1-Jan-11	NM	NM	NM	NM	NM	NM	NM	NM	NM	NM	NM	NM
1-Feb-11	NM	NM	NM	NM	NM	NM	NM	NM	NM	NM	NM	NM
1-Mar-11	NM	NM	NM	NM	NM	NM	NM	NM	NM	NM	NM	NM
1-Apr-11	NM	NM	NM	NM	NM	NM	NM	NM	NM	NM	NM	NM
1-May-11	NM	NM	NM	NM	NM	NM	NM	NM	NM	NM	NM	NM
7-Jun-11	69.47	-21.08	68.94	-21.12	68.42	-20.36	42.10	-15.58	44.90	-18.25	43.77	-16.98

NM = Not measured

CITY OF TRACY
GROUNDWATER LEVEL MEASUREMENTS

MW-5A		MW-5B		MW-5C		MW-6A		MW-6B		MW-6C	
REFERENCE POINT(s)		REFERENCE POINT(s)		REFERENCE POINT(s)		REFERENCE POINT(s)		REFERENCE POINT(s)		REFERENCE POINT(s)	
Revision Date	Elev. (ft)	Revision Date	Elev. (ft)	Revision Date	Elev. (ft)	Revision Date	Elev. (ft)	Revision Date	Elev. (ft)	Revision Date	Elev. (ft)
5-Dec-02	*47*	*5-Dec-02*	*49*	*5-Dec-02*	*47*						
28-Jun-04	48.394	*28-Jun-04*	47.824	*28-Jun-04*	48.062	*28-Jun-04*	*26.52*	*28-Jun-04*	*26.653*	*28-Jun-04*	*26.789*

DATE MEASURED	DEPTH TO WATER	WAT. SURF. ELEV. (ft)	DEPTH TO WATER	WAT. SURF. ELEV. (ft)	DEPTH TO WATER	WAT. SURF. ELEV. (ft)	DEPTH TO WATER	WAT. SURF. ELEV. (ft)	DEPTH TO WATER	WAT. SURF. ELEV. (ft)	DEPTH TO WATER	WAT. SURF. ELEV. (ft)
1-Jul-11	86.00	-37.61	80.90	-33.08	74.60	-26.54	46.50	-19.98	49.40	-22.75	47.80	-21.01
9-Aug-11	NM	NM	NM	NM	NM	NM	NM	NM	NM	NM	NM	NM
21-Sep-11	NM	NM	NM	NM	NM	NM	NM	NM	NM	NM	NM	NM
24-Oct-11	NM	NM	NM	NM	NM	NM	NM	NM	NM	NM	NM	NM
1-Nov-11	NM	NM	NM	NM	NM	NM	NM	NM	NM	NM	NM	NM
6-Dec-11	63.15	-14.76	65.80	-17.98	66.32	-18.26	42.45	-15.93	44.83	-18.18	43.31	-16.52
1-Jan-12	NM	NM	NM	NM	NM	NM	NM	NM	NM	NM	NM	NM
1-Feb-12	NM	NM	NM	NM	NM	NM	NM	NM	NM	NM	NM	NM
22-Mar-12	65.20	-16.81	62.45	-14.63	59.90	-11.84	35.60	-9.08	35.55	-8.90	36.50	-9.71
1-Apr-12	NM	NM	NM	NM	NM	NM	NM	NM	NM	NM	NM	NM
1-May-12	NM	NM	NM	NM	NM	NM	NM	NM	NM	NM	NM	NM
18-Jun-12	75.44	-27.05	71.81	-23.99	69.32	-21.26	41.16	-14.64	43.35	-16.70	42.18	-15.39
1-Jul-12	NM	NM	NM	NM	NM	NM	NM	NM	NM	NM	NM	NM
1-Aug-12	NM	NM	NM	NM	NM	NM	NM	NM	NM	NM	NM	NM
19-Sep-12	91.28	-42.89	86.33	-38.51	80.71	-32.65	57.16	-30.64	61.55	-34.90	55.94	-29.15
1-Oct-12	NM	NM	NM	NM	NM	NM	NM	NM	NM	NM	NM	NM
1-Nov-12	NM	NM	NM	NM	NM	NM	NM	NM	NM	NM	NM	NM
1-Dec-12	64.62	-16.23	64.73	-16.91	64.54	-16.48	46.15	-19.63	49.29	-22.64	45.35	-18.56
1-Jan-13	NM	NM	NM	NM	NM	NM	NM	NM	NM	NM	NM	NM
1-Feb-13	55.05	-6.66	55.43	-7.61	56.92	-8.86	35.80	-9.28	35.68	-9.03	36.33	-9.54
1-Mar-13	NM	NM	NM	NM	NM	NM	NM	NM	NM	NM	NM	NM
11-Apr-13	67.78	-19.39	64.12	-16.30	63.76	-15.70	38.07	-11.55	37.62	-10.97	38.73	-11.94
1-May-13	NM	NM	NM	NM	NM	NM	NM	NM	NM	NM	NM	NM
1-Jun-13	NM	NM	NM	NM	NM	NM	NM	NM	NM	NM	NM	NM
1-Jul-13	NM	NM	NM	NM	NM	NM	NM	NM	NM	NM	NM	NM
1-Aug-13	NM	NM	NM	NM	NM	NM	NM	NM	NM	NM	NM	NM
16-Sep-13	80.64	-32.25	79.82	-32.00	78.60	-30.54	51.23	-24.71	55.72	-29.07	53.92	-27.13

NM = Not measured

CITY OF TRACY
GROUNDWATER LEVEL MEASUREMENTS

	Alden Park (Chevron)								Grant Line (Chevron)				Tracy-Kerlinger (Agg Plant)			
	MW-8 (unc)		MW-10 (unc)		MW-11 (unc)		MW-14 (unc)		MW-1 (unc)		MW-3 (unc)		MW-4 (unc)		MW-5 (unc)	
	REFERENCE POINT(s)		REFERENCE POINT(s)		REFERENCE POINT(s)		REFERENCE POINT(s)		REFERENCE POINT(s)		REFERENCE POINT(s)		REFERENCE POINT(s)		REFERENCE POINT(s)	
	Revision Date	Elev. (ft)	Revision Date	Elev. (ft)	Revision Date	Elev. (ft)	Revision Date	Elev. (ft)	Revision Da	Elev. (ft)	Revision Da	Elev. (ft)	Revision Da	Elev. (ft)	Revision Da	Elev. (ft)
		50.65		*51.66*		*55.09*		*54.17*		*26.38*		*27.23*		*187.88*		*188.62*

DATE MEASURED	DEPTH TO WATER	WAT. SURF. ELEV. (ft)	DEPTH TO WATER	WAT. SURF. ELEV. (ft)	DEPTH TO WATER	WAT. SURF. ELEV. (ft)	DEPTH TO WATER	WAT. SURF. ELEV. (ft)	DEPTH TO WATER	WAT. SURF. ELEV. (ft)	DEPTH TO WATER	WAT. SURF. ELEV. (ft)	DEPTH TO WATER	WAT. SURF. ELEV. (ft)	DEPTH TO WATER	WAT. SURF. ELEV. (ft)
15-Jan-01	NM	NM	11.02	40.64	12.33	42.76	11.74	42.43	NM	NM	NM	NM	NM	NM	NM	NM
15-Feb-01	NM	NM	NM	NM	NM	NM	NM	NM	6.46	19.92	6.82	20.41	NM	NM	NM	NM
18-Mar-01	NM	NM	NM	NM	NM	NM	NM	NM	NM	NM	NM	NM	NM	NM	NM	NM
18-Apr-01	NM	NM	NM	NM	NM	NM	NM	NM	NM	NM	NM	NM	NM	NM	NM	NM
19-May-01	10.29	40.36	11.5	40.16	12.8	42.29	12.29	41.88	6.69	19.69	7.12	20.11	NM	NM	NM	NM
19-Jun-01	NM	NM	NM	NM	NM	NM	NM	NM	NM	NM	NM	NM	NM	NM	NM	NM
20-Jul-01	10.75	39.9	11.9	39.76	13.3	41.79	12.65	41.52	7.15	19.23	7.34	19.89	NM	NM	NM	NM
20-Aug-01	NM	NM	NM	NM	NM	NM	NM	NM	NM	NM	NM	NM	NM	NM	NM	NM
20-Sep-01	NM	NM	NM	NM	NM	NM	NM	NM	NM	NM	NM	NM	NM	NM	NM	NM
29-Oct-01	10.7	39.95	11.8	39.86	13.3	41.79	12.5	41.67	6.65	19.73	7.07	20.16	NM	NM	NM	NM
21-Nov-01	NM	NM	NM	NM	NM	NM	NM	NM	NM	NM	NM	NM	NM	NM	NM	NM
22-Dec-01	NM	NM	NM	NM	NM	NM	NM	NM	NM	NM	NM	NM	NM	NM	NM	NM
16-Jan-02	9.65	41	10.9	40.76	12.21	42.88	11.73	42.44	6.28	20.1	6.62	20.61	NM	NM	NM	NM
22-Feb-02	NM	NM	NM	NM	NM	NM	NM	NM	NM	NM	NM	NM	NM	NM	NM	NM
28-Mar-02	NM	NM	NM	NM	NM	NM	NM	NM	NM	NM	NM	NM	NM	NM	NM	NM
25-Apr-02	9.98	40.67	11.28	40.38	12.58	42.51	12.15	42.02	6.64	19.74	7.04	20.19	NM	NM	NM	NM
24-May-02	NM	NM	NM	NM	NM	NM	NM	NM	NM	NM	NM	NM	NM	NM	NM	NM
19-Jun-02	NM	NM	NM	NM	NM	NM	NM	NM	NM	NM	NM	NM	NM	NM	NM	NM
27-Jul-02	10.68	39.97	11.81	39.85	13.25	41.84	12.61	41.56	6.89	19.49	7.32	19.91	NM	NM	NM	NM
29-Aug-02	NM	NM	NM	NM	NM	NM	NM	NM	NM	NM	NM	NM	NM	NM	NM	NM
24-Sep-02	NM	NM	NM	NM	NM	NM	NM	NM	NM	NM	NM	NM	NM	NM	NM	NM
28-Oct-02	NM	NM	NM	NM	NM	NM	NM	NM	6.8	19.58	7.21	20.02	NM	NM	NM	NM
28-Nov-02	10.55	40.1	11.7	39.96	13.19	41.9	12.55	41.62	NM	NM	NM	NM	NM	NM	NM	NM
5-Dec-02	NM	NM	NM	NM	NM	NM	NM	NM	NM	NM	NM	NM	NM	NM	NM	NM
30-Jan-03	NM	NM	NM	NM	NM	NM	NM	NM	7.15	19.23	7.41	19.82	NM	NM	NM	NM
24-Feb-03	NM	NM	NM	NM	NM	NM	NM	NM	NM	NM	NM	NM	NM	NM	NM	NM
16-Mar-03	10.43	40.22	11.7	39.96	13.09	42	12.65	41.52	NM	NM	NM	NM	NM	NM	NM	NM
23-Apr-03	NM	NM	NM	NM	NM	NM	NM	NM	6.42	19.96	6.8	20.43	NM	NM	NM	NM
17-May-03	NM	NM	NM	NM	NM	NM	NM	NM	NM	NM	NM	NM	NM	NM	NM	NM
17-Jun-03	NM	NM	NM	NM	NM	NM	NM	NM	NM	NM	NM	NM	NM	NM	NM	NM
10-Jul-03	NM	NM	NM	NM	NM	NM	NM	NM	6.95	19.43	7.43	19.8	126.34	61.54	127.38	61.24
18-Aug-03	10.97	39.68	12.29	39.37	NM	NM	13.1	41.07	NM	NM	NM	NM	NM	NM	NM	NM
11-Sep-03	NM	NM	NM	NM	NM	NM	NM	NM	NM	NM	NM	NM	NM	NM	NM	NM
14-Oct-03	NM	NM	NM	NM	NM	NM	NM	NM	6.82	19.56	7.27	19.96	NM	NM	NM	NM
10-Nov-03	NM	NM	NM	NM	NM	NM	NM	NM	NM	NM	NM	NM	125.06	62.82	125.81	62.81
10-Dec-03	NM	NM	NM	NM	NM	NM	NM	NM	NM	NM	NM	NM	NM	NM	NM	NM
20-Jan-04	NM	NM	NM	NM	NM	NM	NM	NM	6.37	20.01	6.76	20.47	NM	NM	NM	NM
10-Feb-04	10.54	40.11	11.9	39.76	13.3	41.79	12.85	41.32	NM	NM	NM	NM	125.36	62.52	125.47	63.15
15-Mar-04	NM	NM	NM	NM	NM	NM	NM	NM	NM	NM	NM	NM	NM	NM	NM	NM
22-Apr-04	NM	NM	NM	NM	NM	NM	NM	NM	7.19	19.19	6.59	20.64	NM	NM	NM	NM
10-May-04	NM	NM	NM	NM	NM	NM	NM	NM	NM	NM	NM	NM	NM	NM	NM	NM
14-Jun-04	NM	NM	NM	NM	NM	NM	NM	NM	NM	NM	NM	NM	NM	NM	NM	NM

NM = Not measured

CITY OF TRACY
GROUNDWATER LEVEL MEASUREMENTS

	Alden Park (Chevron)								Grant Line (Chevron)				Tracy-Kerlinger (Agg Plant)			
	MW-8 (unc)		MW-10 (unc)		MW-11 (unc)		MW-14 (unc)		MW-1 (unc)		MW-3 (unc)		MW-4 (unc)		MW-5 (unc)	
	REFERENCE POINT(s)		REFERENCE POINT(s)		REFERENCE POINT(s)		REFERENCE POINT(s)		REFERENCE POINT(s)		REFERENCE POINT(s)		REFERENCE POINT(s)		REFERENCE POINT(s)	
	Revision Date	Elev. (ft)	Revision Date	Elev. (ft)	Revision Date	Elev. (ft)	Revision Date	Elev. (ft)	Revision Da	Elev. (ft)	Revision Da	Elev. (ft)	Revision Da	Elev. (ft)	Revision Da	Elev. (ft)
		50.65		*51.66*		*55.09*		*54.17*		*26.38*		*27.23*		*187.88*		*188.62*

DATE MEASURED	DEPTH TO WATER	WAT. SURF. ELEV. (ft)	DEPTH TO WATER	WAT. SURF. ELEV. (ft)	DEPTH TO WATER	WAT. SURF. ELEV. (ft)	DEPTH TO WATER	WAT. SURF. ELEV. (ft)	DEPTH TO WATER	WAT. SURF. ELEV. (ft)	DEPTH TO WATER	WAT. SURF. ELEV. (ft)	DEPTH TO WATER	WAT. SURF. ELEV. (ft)	DEPTH TO WATER	WAT. SURF. ELEV. (ft)
20-Jul-04	NM	NM	NM	NM	NM	NM	NM	NM	7.46	18.92	7.83	19.4	127.66	60.22	128.43	60.19
16-Aug-04	11.35	39.3	12.6	39.06	14.08	41.01	13.6	40.57	NM	NM	NM	NM	NM	NM	NM	NM
14-Sep-04	NM	NM	NM	NM	NM	NM	NM	NM	NM	NM	NM	NM	127.32	60.56	128.26	60.36
21-Oct-04	NM	NM	NM	NM	NM	NM	NM	NM	6.78	19.6	7.11	20.12	NM	NM	NM	NM
9-Nov-04	NM	NM	NM	NM	NM	NM	NM	NM	NM	NM	NM	NM	NM	NM	NM	NM
3-Dec-04	NM	NM	NM	NM	NM	NM	NM	NM	NM	NM	NM	NM	124.13	63.75	124.41	64.21
24-Jan-05	NM	NM	NM	NM	NM	NM	NM	NM	6.53	19.85	6.8	20.43	NM	NM	NM	NM
22-Feb-05	10.31	40.34	11.56	40.1	12.13	42.96	12.69	41.48	NM	NM	NM	NM	NM	NM	NM	NM
15-Mar-05	NM	NM	NM	NM	NM	NM	NM	NM	NM	NM	NM	NM	118.82	69.06	119.8	68.82
22-Apr-05	NM	NM	NM	NM	NM	NM	NM	NM	6.62	19.76	6.99	20.24	NM	NM	NM	NM
20-May-05	NM	NM	NM	NM	NM	NM	NM	NM	NM	NM	NM	NM	NM	NM	NM	NM
23-Jun-05	NM	NM	NM	NM	NM	NM	NM	NM	NM	NM	NM	NM	NM	NM	NM	NM
26-Jul-05	NM	NM	NM	NM	NM	NM	NM	NM	6.98	19.4	7.38	19.85	NM	NM	NM	NM
15-Aug-05	11.13	39.52	12.32	39.34	13.83	41.26	13.29	40.88	NM	NM	NM	NM	126.33	61.55	127.39	61.23
14-Sep-05	NM	NM	NM	NM	NM	NM	NM	NM	NM	NM	NM	NM	NM	NM	NM	NM
11-Oct-05	NM	NM	NM	NM	NM	NM	NM	NM	6.7	19.68	7.08	20.15	NM	NM	NM	NM
4-Nov-05	NM	NM	NM	NM	NM	NM	NM	NM	NM	NM	NM	NM	NM	NM	NM	NM
7-Dec-05	NM	NM	NM	NM	NM	NM	NM	NM	NM	NM	NM	NM	NM	NM	NM	NM
1-Jan-06	NM	NM	NM	NM	NM	NM	NM	NM	6.26	20.12	6.65	20.58	NM	NM	NM	NM
15-Feb-06	10.7	39.95	11.95	39.71	13.31	41.78	12.91	41.26	NM	NM	NM	NM	NM	NM	NM	NM
10-Mar-06	NM	NM	NM	NM	NM	NM	NM	NM	NM	NM	NM	NM	NM	NM	NM	NM
26-Apr-06	NM	NM	NM	NM	NM	NM	NM	NM	5.92	20.46	6.32	20.91	NM	NM	NM	NM
1-May-06	NM	NM	NM	NM	NM	NM	NM	NM	NM	NM	NM	NM	NM	NM	NM	NM
1-Jun-06	NM	NM	NM	NM	NM	NM	NM	NM	NM	NM	NM	NM	NM	NM	NM	NM
1-Jul-06	NM	NM	NM	NM	NM	NM	NM	NM	6.93	19.45	7.46	19.77	NM	NM	NM	NM
1-Aug-06	10.98	39.67	12.07	39.59	13.53	41.56	13	41.17	NM	NM	NM	NM	NM	NM	NM	NM
1-Sep-06	NM	NM	NM	NM	NM	NM	NM	NM	NM	NM	NM	NM	NM	NM	NM	NM
1-Oct-06	NM	NM	NM	NM	NM	NM	NM	NM	6.92	19.46	7.41	19.82	NM	NM	NM	NM
30-Nov-06	NM	NM	NM	NM	NM	NM	NM	NM	NM	NM	NM	NM	NM	NM	NM	NM
1-Dec-06	NM	NM	NM	NM	NM	NM	NM	NM	NM	NM	NM	NM	NM	NM	NM	NM
1-Jan-07	10.92	39.73	12.08	39.58	13.64	41.45	13.07	41.1	6.86	19.52	7.29	19.94	NM	NM	NM	NM
1-Feb-07	NM	NM	NM	NM	NM	NM	NM	NM	NM	NM	NM	NM	NM	NM	NM	NM
16-Mar-07	NM	NM	NM	NM	NM	NM	NM	NM	NM	NM	NM	NM	NM	NM	NM	NM
25-Apr-07	NM	NM	NM	NM	NM	NM	NM	NM	6.7	19.68	7.12	20.11	NM	NM	NM	NM
30-May-07	NM	NM	NM	NM	NM	NM	NM	NM	NM	NM	NM	NM	NM	NM	NM	NM
1-Jun-07	NM	NM	NM	NM	NM	NM	NM	NM	NM	NM	NM	NM	NM	NM	NM	NM
25-Jul-07	NM	NM	NM	NM	NM	NM	NM	NM	7.11	19.27	7.6	19.63	NM	NM	NM	NM
1-Aug-07	NM	NM	NM	NM	NM	NM	NM	NM	NM	NM	NM	NM	NM	NM	NM	NM
1-Sep-07	NM	NM	NM	NM	NM	NM	NM	NM	NM	NM	NM	NM	NM	NM	NM	NM
16-Oct-07	NM	NM	NM	NM	NM	NM	NM	NM	6.71	19.67	7.18	20.05	NM	NM	NM	NM
11-Nov-07	NM	NM	NM	NM	NM	NM	NM	NM	NM	NM	NM	NM	NM	NM	NM	NM
1-Dec-07	NM	NM	NM	NM	NM	NM	NM	NM	NM	NM	NM	NM	NM	NM	NM	NM

NM = Not measured

CITY OF TRACY
GROUNDWATER LEVEL MEASUREMENTS

	Alden Park (Chevron)								Grant Line (Chevron)				Tracy-Kerlinger (Agg Plant)			
	MW-8 (unc)		MW-10 (unc)		MW-11 (unc)		MW-14 (unc)		MW-1 (unc)		MW-3 (unc)		MW-4 (unc)		MW-5 (unc)	
	REFERENCE POINT(s)		REFERENCE POINT(s)		REFERENCE POINT(s)		REFERENCE POINT(s)		REFERENCE POINT(s)		REFERENCE POINT(s)		REFERENCE POINT(s)		REFERENCE POINT(s)	
	Revision Date	Elev. (ft)	Revision Date	Elev. (ft)	Revision Date	Elev. (ft)	Revision Date	Elev. (ft)	Revision Da	Elev. (ft)	Revision Da	Elev. (ft)	Revision Da	Elev. (ft)	Revision Da	Elev. (ft)
		50.65		*51.66*		*55.09*		*54.17*		*26.38*		*27.23*		*187.88*		*188.62*

DATE MEASURED	DEPTH TO WATER	WAT. SURF. ELEV. (ft)	DEPTH TO WATER	WAT. SURF. ELEV. (ft)	DEPTH TO WATER	WAT. SURF. ELEV. (ft)	DEPTH TO WATER	WAT. SURF. ELEV. (ft)	DEPTH TO WATER	WAT. SURF. ELEV. (ft)	DEPTH TO WATER	WAT. SURF. ELEV. (ft)	DEPTH TO WATER	WAT. SURF. ELEV. (ft)	DEPTH TO WATER	WAT. SURF. ELEV. (ft)
1-Jan-08	10.49	40.16	11.61	40.05	13.25	41.84	12.71	41.46	5.95	20.43	6.3	20.93	NM	NM	NM	NM
1-Feb-08	NM	NM	NM	NM	NM	NM	NM	NM	NM	NM	NM	NM	NM	NM	NM	NM
10-Mar-08	NM	NM	NM	NM	NM	NM	NM	NM	NM	NM	NM	NM	NM	NM	NM	NM
1-Apr-08	NM	NM	NM	NM	NM	NM	NM	NM	6.66	19.72	7.1	20.13	NM	NM	NM	NM
1-May-08	NM	NM	NM	NM	NM	NM	NM	NM	NM	NM	NM	NM	NM	NM	NM	NM
26-Jun-08	NM	NM	NM	NM	NM	NM	NM	NM	NM	NM	NM	NM	NM	NM	NM	NM
8-Jul-08	NM	NM	NM	NM	NM	NM	NM	NM	7.2	19.18	7.68	19.55	NM	NM	NM	NM
1-Aug-08	NM	NM	NM	NM	NM	NM	NM	NM	NM	NM	NM	NM	NM	NM	NM	NM
1-Sep-08	NM	NM	NM	NM	NM	NM	NM	NM	NM	NM	NM	NM	NM	NM	NM	NM
1-Oct-08	NM	NM	NM	NM	NM	NM	NM	NM	7.76	18.62	7.64	19.59	NM	NM	NM	NM
1-Nov-08	NM	NM	NM	NM	NM	NM	NM	NM	NM	NM	NM	NM	NM	NM	NM	NM
1-Dec-08	NM	NM	NM	NM	NM	NM	NM	NM	NM	NM	NM	NM	NM	NM	NM	NM
1-Jan-09	10.91	39.74	12.01	39.65	13.72	41.37	13.02	41.15	6.15	20.23	6.59	20.64	NM	NM	NM	NM
1-Feb-09	NM	NM	NM	NM	NM	NM	NM	NM	NM	NM	NM	NM	NM	NM	NM	NM
1-Mar-09	NM	NM	NM	NM	NM	NM	NM	NM	NM	NM	NM	NM	NM	NM	NM	NM
1-Apr-09	NM	NM	NM	NM	NM	NM	NM	NM	6.65	19.73	7.1	20.13	NM	NM	NM	NM
1-May-09	NM	NM	NM	NM	NM	NM	NM	NM	NM	NM	NM	NM	NM	NM	NM	NM
1-Jun-09	NM	NM	NM	NM	NM	NM	NM	NM	NM	NM	NM	NM	NM	NM	NM	NM
1-Jul-09	NM	NM	NM	NM	NM	NM	NM	NM	NM	NM	NM	NM	NM	NM	NM	NM
1-Aug-09	NM	NM	NM	NM	NM	NM	NM	NM	NM	NM	NM	NM	NM	NM	NM	NM
1-Sep-09	NM	NM	NM	NM	NM	NM	NM	NM	NM	NM	NM	NM	127.31	60.57	127.86	60.76
1-Oct-09	NM	NM	NM	NM	NM	NM	NM	NM	6.78	19.6	7.22	20.01	NM	NM	NM	NM
1-Nov-09	NM	NM	NM	NM	NM	NM	NM	NM	NM	NM	NM	NM	NM	NM	NM	NM
1-Dec-09	NM	NM	NM	NM	NM	NM	NM	NM	NM	NM	NM	NM	NM	NM	NM	NM
1-Jan-10	11.42	39.23	12.54	39.12	14.18	40.91	13.57	40.6	5.78	20.6	6.7	20.53	NM	NM	NM	NM
1-Feb-10	NM	NM	NM	NM	NM	NM	NM	NM	NM	NM	NM	NM	NM	NM	NM	NM
1-Mar-10	NM	NM	NM	NM	NM	NM	NM	NM	NM	NM	NM	NM	NM	NM	NM	NM
1-Apr-10	NM	NM	NM	NM	NM	NM	NM	NM	6.36	20.02	6.75	20.48	NM	NM	NM	NM
1-May-10	NM	NM	NM	NM	NM	NM	NM	NM	NM	NM	NM	NM	NM	NM	NM	NM
1-Jun-10	NM	NM	NM	NM	NM	NM	NM	NM	NM	NM	NM	NM	NM	NM	NM	NM
1-Jul-10	NM	NM	NM	NM	NM	NM	NM	NM	7.1	19.28	7.59	19.64	NM	NM	NM	NM
1-Aug-10	NM	NM	NM	NM	NM	NM	NM	NM	NM	NM	NM	NM	NM	NM	NM	NM
1-Sep-10	NM	NM	NM	NM	NM	NM	NM	NM	NM	NM	NM	NM	126.97	60.91	127.57	61.05
1-Oct-10	NM	NM	NM	NM	NM	NM	NM	NM	6.88	19.5	7.32	19.91	NM	NM	NM	NM
1-Nov-10	NM	NM	NM	NM	NM	NM	NM	NM	NM	NM	NM	NM	NM	NM	NM	NM
24-Dec-10	NM	NM	NM	NM	NM	NM	NM	NM	NM	NM	NM	NM	NM	NM	NM	NM
1-Jan-11	NM	NM	NM	NM	NM	NM	NM	NM	6.63	19.75	7.05	20.18	NM	NM	NM	NM
1-Feb-11	NM	NM	NM	NM	NM	NM	NM	NM	NM	NM	NM	NM	NM	NM	NM	NM
1-Mar-11	10.86	39.79	12.12	39.54	13.7	41.39	13.15	41.02	NM	NM	NM	NM	NM	NM	NM	NM
1-Apr-11	NM	NM	NM	NM	NM	NM	NM	NM	6.41	19.97	6.84	20.39	NM	NM	NM	NM
1-May-11	NM	NM	NM	NM	NM	NM	NM	NM	NM	NM	NM	NM	NM	NM	NM	NM
7-Jun-11	NM	NM	NM	NM	NM	NM	NM	NM	NM	NM	NM	NM	NM	NM	NM	NM

NM = Not measured

CITY OF TRACY
GROUNDWATER LEVEL MEASUREMENTS

	Alden Park (Chevron)								Grant Line (Chevron)				Tracy-Kerlinger (Agg Plant)			
	MW-8 (unc)		MW-10 (unc)		MW-11 (unc)		MW-14 (unc)		MW-1 (unc)		MW-3 (unc)		MW-4 (unc)		MW-5 (unc)	
	REFERENCE POINT(s)		REFERENCE POINT(s)		REFERENCE POINT(s)		REFERENCE POINT(s)		REFERENCE POINT(s)		REFERENCE POINT(s)		REFERENCE POINT(s)		REFERENCE POINT(s)	
	Revision Date	Elev. (ft)	Revision Date	Elev. (ft)	Revision Date	Elev. (ft)	Revision Date	Elev. (ft)	Revision Da	Elev. (ft)	Revision Da	Elev. (ft)	Revision Da	Elev. (ft)	Revision Da	Elev. (ft)
		50.65		*51.66*		*55.09*		*54.17*		*26.38*		*27.23*		*187.88*		*188.62*

DATE MEASURED	DEPTH TO WATER	WAT. SURF. ELEV. (ft)	DEPTH TO WATER	WAT. SURF. ELEV. (ft)	DEPTH TO WATER	WAT. SURF. ELEV. (ft)	DEPTH TO WATER	WAT. SURF. ELEV. (ft)	DEPTH TO WATER	WAT. SURF ELEV. (ft)	DEPTH TO WATER	WAT. SURF ELEV. (ft)	DEPTH TO WATER	WAT. SURF ELEV. (ft)	DEPTH TO WATER	WAT. SURF ELEV. (ft)
1-Jul-11	NM	NM	NM	NM	NM	NM	NM	NM	NM	NM	NM	NM	NM	NM	NM	NM
9-Aug-11	NM	NM	NM	NM	NM	NM	NM	NM	NM	NM	NM	NM	NM	NM	NM	NM
21-Sep-11	NM	NM	NM	NM	NM	NM	NM	NM	NM	NM	NM	NM	NM	NM	NM	NM
24-Oct-11	NM	NM	NM	NM	NM	NM	NM	NM	6.98	19.4	7.42	19.81	NM	NM	NM	NM
1-Nov-11	NM	NM	NM	NM	NM	NM	NM	NM	NM	NM	NM	NM	NM	NM	NM	NM
6-Dec-11	NM	NM	NM	NM	NM	NM	NM	NM	NM	NM	NM	NM	NM	NM	NM	NM
1-Jan-12	NM	NM	NM	NM	NM	NM	NM	NM	NM	NM	NM	NM	NM	NM	NM	NM
1-Feb-12	NM	NM	NM	NM	NM	NM	NM	NM	NM	NM	NM	NM	NM	NM	NM	NM
22-Mar-12	11.34	39.31	12.52	39.14	14.08	41.01	13.56	40.61	NM	NM	NM	NM	NM	NM	NM	NM
1-Apr-12	NM	NM	NM	NM	NM	NM	NM	NM	6.43	19.95	6.85	20.38	NM	NM	NM	NM
1-May-12	NM	NM	NM	NM	NM	NM	NM	NM	NM	NM	NM	NM	NM	NM	NM	NM
18-Jun-12	NM	NM	NM	NM	NM	NM	NM	NM	NM	NM	NM	NM	NM	NM	NM	NM
1-Jul-12	NM	NM	NM	NM	NM	NM	NM	NM	NM	NM	NM	NM	NM	NM	NM	NM
1-Aug-12	NM	NM	NM	NM	NM	NM	NM	NM	NM	NM	NM	NM	NM	NM	NM	NM
19-Sep-12	NM	NM	NM	NM	NM	NM	NM	NM	NM	NM	NM	NM	NM	NM	NM	NM
1-Oct-12	NM	NM	NM	NM	NM	NM	NM	NM	6.76	19.62	7.22	20.01	NM	NM	NM	NM
1-Nov-12	NM	NM	NM	NM	NM	NM	NM	NM	NM	NM	NM	NM	NM	NM	NM	NM
1-Dec-12	NM	NM	NM	NM	NM	NM	NM	NM	NM	NM	NM	NM	NM	NM	NM	NM
1-Jan-13	NM	NM	NM	NM	NM	NM	NM	NM	NM	NM	NM	NM	NM	NM	NM	NM
1-Feb-13	NM	NM	NM	NM	NM	NM	NM	NM	NM	NM	NM	NM	123.62	64.26	122.61	66.01
1-Mar-13	NM	NM	NM	NM	NM	NM	NM	NM	NM	NM	NM	NM	NM	NM	NM	NM
11-Apr-13	10.79	39.86	12.01	39.65	13.48	41.61	13.02	41.15	NM	NM	NM	NM	NM	NM	NM	NM
1-May-13	NM	NM	NM	NM	NM	NM	NM	NM	6.91	19.47	7.35	19.88	NM	NM	NM	NM
1-Jun-13	NM	NM	NM	NM	NM	NM	NM	NM	NM	NM	NM	NM	NM	NM	NM	NM
1-Jul-13	NM	NM	NM	NM	NM	NM	NM	NM	NM	NM	NM	NM	NM	NM	NM	NM
1-Aug-13	NM	NM	NM	NM	NM	NM	NM	NM	NM	NM	NM	NM	NM	NM	NM	NM
16-Sep-13	NM	NM	NM	NM	NM	NM	NM	NM	NM	NM	NM	NM	NM	NM	126.15	62.47

NM = Not measured

Appendix B

Production/Recharge Data

J:\Wr\richards\tracy\GWprod

CITY OF TRACY
GROUNDWATER PRODUCTION
(in million gallons)

		WELL	WELL	WELL	WELL	WELL	WELL	WELL	WELL	MONTHLY TOTAL		ANNUAL TOTAL
DATE	LINCOLN	1	2	3	4	5	6	7	8	(Mil Gals)	(Ac-Ft)	(Ac-Ft)
Jan-01	48.36	26.43	30.58	27.06	0.00					180.83	555	
Feb-01	60.91	20.43	38.10	47.93	0.00					203.15	623	
Mar-01	58.87	20.23	43.56	48.20	0.00					235.07	721	
Apr-01	46.47	27.36	19.69	15.73	0.00					162.97	500	
May-01	77.97	34.88	33.74	22.52	0.00					249.25	765	
Jun-01	90.10	44.84	44.37	41.38	7.39					325.65	999	
Jul-01	87.57	43.58	45.46	44.14	22.38					331.12	1016	
Aug-01	79.82	39.04	31.06	32.29	19.19					276.04	847	
Sep-01	63.57	25.82	25.33	24.58	13.22					203.12	623	
Oct-01	43.12	33.80	42.96	41.42	19.39					180.69	555	
Nov-01	9.99	31.32	21.27	22.42	9.66					94.66	291	
Dec-01	43.24	0.55	47.88	43.30	24.73					159.70	490	**7,987**
Jan-02	65.38	0.54	55.98	52.81	0.06					214.32	658	
Feb-02	61.18	40.78	41.96	40.70	0.00					211.57	649	
Mar-02	22.97	36.54	36.36	34.66	0.00					146.12	448	
Apr-02	53.23	51.37	38.16	38.38	0.72					198.45	609	
May-02	76.28	56.85	50.14	49.49	1.22	15.86				276.57	849	
Jun-02	41.65	52.54	48.39	39.05	8.87	74.01				319.01	979	
Jul-02	85.39	49.61	44.55	46.38	0.88	72.73				323.12	992	
Aug-02	66.74	45.87	35.06	37.53	0.03	73.60				267.12	820	
Sep-02	20.32	37.34	22.51	36.63	0.69	69.41				204.57	628	
Oct-02	40.19	46.10	0.02	42.15	0.24	60.30				189.57	582	
Nov-02	8.37	21.68	0.00	25.68	0.00	14.83				71.51	219	
Dec-02	10.44	32.96	0.00	12.05	0.00	37.03				92.48	284	**7,717**
Jan-03	19.86	54.51	0.00	54.73	0.00	37.97	1.48	21.86		190.41	584	
Feb-03	29.92	32.38	0.00	22.98	0.00	30.03	4.93	12.18		132.41	406	
Mar-03	59.86	12.21	0.00	8.00	0.00	26.02	4.84	10.66		121.59	373	
Apr-03	37.98	24.68	0.00	11.75	0.00	41.60	5.80	9.35		131.15	403	
May-03	55.83	21.02	0.00	28.66	0.00	46.64	24.55	21.99		198.70	610	
Jun-03	63.97	36.54	0.00	42.31	0.00	70.91	28.35	46.82		296.32	909	
Jul-03	78.57	43.76	0.00	49.22	0.00	73.15	42.01	37.99		337.74	1037	
Aug-03	58.31	36.10	0.00	33.45	0.00	59.40	26.94	31.56		257.75	791	
Sep-03	61.86	26.13	0.00	30.52	0.00	44.60	11.83	31.94		214.64	659	
Oct-03	22.79	26.21	0.00	25.02	0.00	23.96	21.65	19.93		140.61	432	
Nov-03	14.69	11.24	0.00	14.50	0.00	29.01	6.41	11.03		86.88	267	
Dec-03	42.68	6.92	0.00	13.22	0.00	63.87	2.89	3.21		132.79	408	**6,878**
Jan-04	45.66	52.07	0.00	61.76	0.00	58.86	7.51	6.91		233.24	716	
Feb-04	45.66	9.00	0.00	17.11	0.00	13.49	7.05	25.12		117.91	362	
Mar-04	60.39	6.86	0.00	11.33	0.00	45.54	20.64	28.35		175.68	539	
Apr-04	38.03	44.97	0.00	6.85	0.00	36.95	13.42	9.69		149.92	460	
May-04	57.94	17.58	0.00	23.95	0.00	65.64	23.50	31.06		219.67	674	
Jun-04	77.47	30.47	25.20	40.66	0.00	83.32	18.64	40.24		316.01	970	
Jul-04	70.77	38.03	42.85	39.68	0.00	67.03	0.00	41.69		300.05	921	
Aug-04	64.81	31.47	33.87	31.25	25.08	74.99	0.00	40.14		301.61	926	
Sep-04	45.75	23.10	24.23	12.10	11.90	55.63	7.15	42.23		222.08	682	
Oct-04	30.69	13.73	7.44	3.73	5.15	7.88	0.37	10.20		79.20	243	
Nov-04	4.03	4.81	5.33	1.24	1.15	0.61	0.15	0.19		17.50	54	
Dec-04	9.85	29.01	22.47	26.77	18.94	4.04	0.57	0.18		111.83	343	**6,889**

J:Wr/richards/tracy/GWprod

CITY OF TRACY
GROUNDWATER PRODUCTION
(in million gallons)

		WELL	WELL	WELL	WELL	WELL	WELL	WELL	WELL	MONTHLY TOTAL		ANNUAL TOTAL
DATE	LINCOLN	1	2	3	4	5	6	7	8	(Mil Gals)	(Ac-Ft)	(Ac-Ft)
Jan-05	21.03	47.34	43.03	35.94	42.31	26.48	2.00	74.10		292.23	897	
Feb-05	42.46	20.63	22.95	23.42	22.38	0.00	5.76	16.62		154.22	473	
Mar-05	25.39	6.85	10.30	8.41	11.35	0.00	9.66	12.26		84.20	258	
Apr-05	35.85	20.19	1.01	4.19	22.73	13.40	12.53	15.28		125.19	384	
May-05	12.59	19.05	10.41	13.64	18.01	48.90	19.23	30.82		172.65	530	
Jun-05	44.11	21.86	23.44	25.63	11.52	63.50	30.70	43.47		264.23	811	
Jul-05	65.63	29.13	23.30	32.45	29.81	66.13	31.13	50.49		328.07	1007	
Aug-05	49.69	37.98	25.03	33.99	16.88	55.56	22.58	41.49		283.19	869	
Sep-05	18.14	13.38	7.78	11.29	10.15	18.33	5.22	4.83		89.11	273	
Oct-05	9.50	11.98	1.53	9.17	8.89	12.83	2.38	5.58		61.86	190	
Nov-05	9.54	4.38	0.00	4.00	3.93	8.15	0.34	2.80		33.13	102	
Dec-05	10.38	9.46	0.75	10.98	17.57	18.40	2.01	7.65		77.19	237	**6,032**
Jan-06	4.10	4.98	0.00	7.66	4.48	7.50	2.29	5.23		36.23	111	
Feb-06	16.64	1.16	0.00	0.28	0.74	20.99	2.40	5.32		47.52	146	
Mar-06	7.66	0.84	0.00	2.11	1.19	7.51	3.55	5.59		28.45	87	
Apr-06	4.46	7.33	0.00	1.24	2.51	0.99	1.58	1.50		19.60	60	
May-06	19.10	10.23	0.00	13.07	11.86	34.21	12.27	22.03		122.77	377	
Jun-06	14.65	21.11	0.00	21.45	7.73	33.40	10.38	25.98		134.70	413	
Jul-06	45.59	28.54	0.00	21.32	16.45	50.30	20.01	28.80		211.03	648	
Aug-06	27.42	15.13	0.00	17.34	10.18	37.01	10.71	21.80		139.59	428	
Sep-06	7.00	4.08	0.00	13.64	12.96	21.52	6.63	8.89		74.70	229	
Oct-06	8.53	3.73	0.00	9.11	6.24	18.88	4.98	8.54		60.00	184	
Nov-06	9.03	19.39	0.00	9.91	13.05	8.87	2.71	5.62		68.56	210	
Dec-06	8.86	10.19	0.00	4.11	2.51	10.92	1.94	6.46		44.99	138	**3,033**
Jan-07	13.73	13.45	0.00	4.95	4.31	11.20	7.73	8.69		64.07	197	
Feb-07	7.36	6.01	0.00	7.39	7.41	6.00	2.61	7.38		44.16	136	
Mar-07	31.12	9.03	0.00	24.12	29.62	24.60	7.75	15.01		141.23	433	
Apr-07	47.66	3.76	0.00	45.57	50.37	68.10	25.41	29.73		270.59	830	
May-07	28.66	6.21	0.00	28.23	24.73	51.37	19.68	36.26		195.13	599	
Jun-07	46.30	4.34	0.00	13.13	10.96	13.89	27.62	43.56		159.81	490	
Jul-07	26.90	3.11	0.00	6.73	8.08	46.77	17.23	48.88		157.68	484	
Aug-07	13.56	3.25	0.00	2.28	3.31	26.07	5.62	20.83		74.91	230	
Sep-07	11.24	0.29	0.00	1.52	0.98	10.69	5.46	10.56		40.74	125	
Oct-07	6.48	8.02	0.00	0.35	0.00	8.31	1.64	1.14		25.95	80	
Nov-07	6.09	1.88	0.00	0.08	0.06	5.55	2.38	2.52		18.55	57	
Dec-07	0.73	0.65	0.00	0.12	0.15	1.84	0.01	0.00		3.49	11	**3,672**
Jan-08	4.09	11.83	0.00	1.64	0.12	2.55	1.27	1.32		22.83	70	
Feb-08	20.28	38.62	13.30	9.69	4.25	9.35	2.32	5.67		103.49	318	
Mar-08	21.95	24.84	32.09	17.21	9.82	14.36	13.54	12.62		146.43	449	
Apr-08	17.64	9.88	18.33	8.61	0.74	51.35	0.71	36.87		144.12	442	
May-08	10.61	5.40	12.85	15.22	21.58	6.66	16.80	34.17		123.29	378	
Jun-08	13.80	6.19	11.50	5.92	8.21	29.27	20.31	16.75		111.95	344	
Jul-08	14.55	4.27	3.23	6.00	5.73	17.53	10.74	13.84		75.89	233	
Aug-08	0.00	1.62	5.44	3.99	3.75	12.09	7.51	14.64		49.04	151	
Sep-08	3.22	8.60	12.89	4.67	6.50	7.31	3.74	3.20		50.13	154	
Oct-08	1.23	0.00	0.30	0.06	0.15	0.47	2.42	1.47		6.10	19	**2,557***
Nov-08												
Dec-08												

J:Wr/richards/tracy/GWprod

CITY OF TRACY
GROUNDWATER PRODUCTION
(in million gallons)

		WELL	WELL	WELL	WELL	WELL	WELL	WELL	WELL	MONTHLY TOTAL		ANNUAL TOTAL
DATE	LINCOLN	1	2	3	4	5	6	7	8	(Mil Gals)	(Ac-Ft)	(Ac-Ft)
Jan-09	0.07	0.00	10.71	9.20	6.18	0.11	0.05	0.05		26.37	81	
Feb-09	3.57	12.72	13.75	10.70	5.73	3.11	1.51	2.44		53.54	164	
Mar-09	8.64	0.00	16.91	10.07	5.29	13.99	8.26	2.13		65.30	200	
Apr-09	0.00	0.00	7.78	3.50	5.10	7.52	5.78	4.66		34.35	105	
May-09	0.00	0.00	7.59	6.85	5.68	10.38	4.83	7.24		42.57	131	
Jun-09	0.00	0.00	4.11	5.06	5.07	11.03	10.95	13.78		50.00	153	
Jul-09	0.00	0.00	5.42	5.18	5.79	37.52	23.92	10.17		87.99	270	
Aug-09	0.00	0.00	2.74	3.15	0.84	12.71	6.96	0.00		26.40	81	
Sep-09	0.00	0.00	0.40	0.36	0.38	1.86	0.95	0.00		3.96	12	
Oct-09	0.00	0.00	0.10	0.09	0.07	0.01	1.27	0.12		1.66	5	
Nov-09	0.00	0.00	5.22	4.47	1.40	3.76	7.04	0.29		22.18	68	
Dec-09	0.00	0.00	0.10	0.06	0.00	5.14	10.39	2.49		18.17	56	**1,327**
Jan-10	0.00	0.00	0.00	0.00	0.00	8.58	5.33	9.05		22.96	70	
Feb-10	0.00	0.00	0.09	1.21	0.13	7.39	1.55	2.28		12.65	39	
Mar-10	0.00	0.00	17.23	15.58	0.00	6.12	7.35	10.88		57.16	175	
Apr-10	0.00	0.00	11.47	3.40	0.00	1.98	8.31	8.56		33.72	103	
May-10	0.00	0.00	0.63	0.04	1.20	1.23	0.61	0.58		4.28	13	
Jun-10	0.00	0.00	0.29	0.00	0.45	1.73	0.54	1.31		4.32	13	
Jul-10	0.00	0.00	0.41	0.35	0.20	2.07	1.54	0.76		5.32	16	
Aug-10	0.00	0.00	0.00	0.81	0.01	1.40	0.46	0.71		3.40	10	
Sep-10	0.00	0.00	0.59	0.06	0.00	3.20	3.17	0.93		7.95	24	
Oct-10	0.00	0.00	0.11	0.02	0.00	0.50	0.42	0.51		1.56	5	
Nov-10	0.00	0.00	0.10	0.00	0.00	-0.03	0.29	0.32		0.68	2	
Dec-10	0.00	0.00	1.57	0.13	0.99	2.45	2.02	1.06		8.22	25	**498**
Jan-11	0.00	0.00	0.30	0.06	0.06	0.24	0.00	1.03	0.00	1.70	5	
Feb-11	0.00	0.00	0.09	0.02	0.02	0.08	0.00	0.18	0.00	0.39	1	
Mar-11	0.00	0.00	8.12	2.63	2.36	4.96	0.63	0.11	0.00	18.80	58	
Apr-11	0.00	0.00	12.32	1.86	2.25	0.54	8.05	0.15	0.00	25.18	77	
May-11	0.00	0.00	0.16	0.00	0.01	2.47	0.56	1.32	0.23	4.75	15	
Jun-11	0.00	0.00	0.04	0.01	0.01	0.25	0.02	0.06	0.65	1.04	3	
Jul-11	0.00	0.00	0.13	0.06	0.01	0.10	0.24	0.30	0.96	1.80	6	
Aug-11	0.00	0.00	0.05	0.01	0.02	0.19	1.27	2.61	1.44	5.59	17	
Sep-11	0.00	0.00	0.00	0.00	0.00	0.13	0.01	0.27	2.10	2.51	8	
Oct-11	0.00	0.00	0.70	1.45	0.00	0.06	0.28	0.16	2.32	4.98	15	
Nov-11	0.00	0.00	0.08	0.00	0.00	1.28	0.05	0.08	2.32	3.81	12	
Dec-11	0.00	0.00	14.86	9.08	5.00	0.63	1.11	1.74	2.32	34.74	107	**323**
Jan-12	0.00	0.00	0.00	0.00	0.00	10.93	2.72	7.80	1.22	22.66	70	
Feb-12	0.00	0.00	0.00	0.00	0.00	0.00	1.94	0.22	0.45	2.61	8	
Mar-12	0.00	0.00	0.00	0.00	0.00	0.01	0.02	0.00	0.35	0.38	1	
Apr-12	0.00	0.00	0.00	0.00	0.00	0.00	0.02	0.00	0.42	0.44	1	
May-12	0.00	0.00	0.03	0.01	0.00	0.00	4.47	0.00	0.65	5.17	16	
Jun-12	0.00	0.00	1.22	0.10	0.00	0.00	0.19	0.00	1.47	2.99	9	
Jul-12	0.00	0.00	0.15	0.00	0.00	0.00	0.01	0.00	78.90	79.06	243	
Aug-12	0.28	0.00	0.10	0.00	0.00	0.00	0.00	0.00	104.55	104.94	322	
Sep-12	0.00	0.00	0.21	0.00	0.00	0.00	0.01	0.00	75.88	76.10	234	
Oct-12	0.00	0.00	0.21	0.00	0.00	0.06	0.00	0.00	9.73	10.00	31	
Nov-12	0.00	0.00	1.58	0.00	0.24	0.08	7.58	12.52	0.00	22.01	68	
Dec-12	0.00	0.00	44.87	4.49	4.20	0.11	6.98	11.81	1.13	73.59	226	**1,227**

J:Wr/richards/tracy/GWprod

CITY OF TRACY
GROUNDWATER PRODUCTION
(in million gallons)

		WELL	WELL	WELL	WELL	WELL	WELL	WELL	WELL	MONTHLY TOTAL		ANNUAL TOTAL
DATE	LINCOLN	1	2	3	4	5	6	7	8	(Mil Gals)	(Ac-Ft)	(Ac-Ft)
Jan-13	0.00	0.00	4.21	0.05	0.01	1.46	8.18	3.77	5.05	22.73	70	
Feb-13	0.00	0.00	0.00	0.00	0.00	0.02	0.00	0.02	0.46	0.50	2	
Mar-13	0.00	0.00	0.00	0.00	0.00	0.75	0.08	0.03	0.52	1.38	4	
Apr-13	0.00	0.00	0.00	0.08	0.00	7.93	3.46	6.12	0.54	18.13	56	
May-13	0.00	0.00	0.00	0.50	14.23	13.70	7.61	11.63	0.12	47.80	147	
Jun-13	0.00	2.22	0.00	18.98	3.08	23.70	15.08	21.74	0.00	84.80	260	
Jul-13	0.00	7.61	0.00	6.01	3.75	0.00	0.03	0.00	10.85	28.25	87	
Aug-13	62.83	9.86	0.00	6.93	4.44	0.08	0.01	0.00	24.09	108.24	332	
Sep-13	0.00	18.00	0.00	10.71	3.70	0.00	0.00	0.01	4.54	36.96	113	
Oct-13										0.00	0	
Nov-13										0.00	0	
Dec-13										0.00	0	**1,070***

Notes: *All totals are from flow meters at each well.*
*Total Year to Date

CITY OF TRACY
GROUNDWATER RECHARGE

	WELL	MONTHLY TOTAL		ANNUAL TOTAL
DATE	8	(Mil Gals)	(Ac-Ft)	(Ac-Ft)
Jan-11	16.50	16.50	51	
Feb-11	14.00	14.00	43	
Mar-11	12.00	12.00	37	
Apr-11	15.70	15.70	48	
May-11		0.00	0	
Jun-11		0.00	0	
Jul-11		0.00	0	
Aug-11		0.00	0	
Sep-11		0.00	0	
Oct-11		0.00	0	
Nov-11		0.00	0	
Dec-11	14.47	14.47	44	**223**
Jan-12	50.60	50.60	155	
Feb-12	64.49	64.49	198	
Mar-12	51.64	51.64	158	
Apr-12	48.18	48.18	148	
May-12	0.00	0.00	0	
Jun-12	0.00	0.00	0	
Jul-12	0.00	0.00	0	
Aug-12	0.00	0.00	0	
Sep-12	0.00	0.00	0	
Oct-12	0.00	0.00	0	
Nov-12	0.00	0.00	0	
Dec-12	0.00	0.00	0	**660**
Jan-13	30.11	30.11	25	
Feb-13	53.21	53.21	53	
Mar-13	57.51	57.51	57	
Apr-13	30.56	30.56	30	
May-13	0.01	0.01	0	
Jun-13	0.00	0.00	0	
Jul-13	0.00	0.00	0	
Aug-13	0.00	0.00	0	
Sep-13	0.00	0.00	0	
Oct-13				
Nov-13				
Dec-13				**165**

Appendix C

Water Quality

CITY OF TRACY
GROUNDWATER QUALITY

WELL NAME	DATE SAMPLED	TDS (mg/L)	EC (uhmos/cm)	pH	Ca (mg/L)	Mg (mg/L)	Na (mg/L)	K (mg/L)	CO3 (mg/L)	HCO3 (mg/L)	SO4 (mg/L)	Cl (mg/L)	NO3 as N (mg/L)	As (ug/L)	B mg/L	Total Cr (ug/L)	F mg/L	Fe (mg/L)	Mn (ug/L)	Alpha Gross (pico curies/liter)
MCLs		500*	900*	6-8							250*	250*	10	50		50	2	0.3	50	100
Lincoln	22-Jul-98	**800**	**1300**	7.9	63	27	150	5.3	0.692	134	**270**	150	2.40	<2.0		7.6	0.1	<0.10	<2.0	
	29-Jul-98																			2.2
	15-Mar-99																			2.3
	17-Jun-99												2.37							<2.0
	15-Jan-01																			
	1-May-01	**800**	**1300**	7.9	63	27	150	5.3	0.692	134	**270**	150	2.40	<2.0	1	7.6	0.1	<0.10	<2.0	
	15-Jul-01																			
	14-Nov-01	**790**	**1270**	8.0	58	24	160	4.3	0.871	134	**280**	180	2.70	<6.0	1.2	1.6	0.09	<0.10	3.9	<1.65
	9-Jan-02	**770**	**1190**	7.9	63	27	150	1.2	0.712	138	250	150	2.40	1.7	1.2	2.7	0.1	<0.10	<2.0	4.5
	2-Apr-02	**810**	**1220**	8.0	65	28	160	4.4	0.89	137	**260**	170	2.50	<1.0	1.3	2.3	0.1	<0.10	<2.0	<3.19
	9-Jul-02	**790**	**1190**	7.9	62	27	160	4.6	0.702	136	**260**	150	2.50	1.8	1.2	2.3	0.11	<0.10	<2.0	2.1
	31-Oct-02	**790**	**1260**	7.9	66	27	160	4.6	0.702	136	250	160	2.60	2.1	1.2	1.9	0.09	<0.10	<2.0	<1.72
	7-Jan-03	**790**	**1250**	7.9	52	21	180	4.5	0.656	127	240	200	2.40	2.0	1.2	1.2	0.07	<0.10	8	<1.29
	22-Apr-03	**770**	**1180**	**8.1**	58	27	140	4.1	1.11	136	**260**	160	2.50	<2.0	1.2	2.3	0.09	<0.10	<2.0	<2.10
	3-Jul-03	**800**	**1240**	8.0	60	28	150	4.3	0.877	135	250	150	2.50	1.8	1.2	1.9	0.09	<0.10	<2.0	<1.64
	21-Oct-03	**780**	**1290**	8.0	53	23	170	4.3	0.832	128	250	200	2.70	<1.0	1.2	1.2	0.08	0.022	3.2	<2.00
	28-Jan-04	**780**	**1280**	7.9	60	26	170	4.7	0.687	133	240	170	2.90	2.2	1.3	5.2	0.08	0.014	<2.0	<2.02
	17-Apr-04																			
	15-Jul-04	**780**	**1170**	7.9	64	28	160	4.4	0.666	129	**260**	170	2.70	<2.0	1.3	2.2	<0.1	<0.10	<20.0	<3.00
	14-Oct-04	**800**	**1170**	8.0	63	28	160	4.4	0.871	134	250	160	2.60	2.5	1.3	1.7	<0.1	<0.10	<20.0	<3.00
	25-Jan-05	**790**	**1240**	**8.1**	59	25	160	4.6	1.09	133	250	170	2.70	<2.0	1.2	4.2	<0.1	<0.10	<20	<3.00
	19-Apr-05	**760**	**1170**	**8.1**	63	27	160	4.7	1.15	140	**260**	160	2.60	<2.0	1.2	2.1	0.1	<0.10	<20	<3.00
	22-Aug-05	**760**	**1230**	**8.2**	62	28	160	4.4	<2.0	130	250	160	2.60	<2.0	1.2	2.5	<0.1	<0.10	<20	<3.00
	10-Oct-05	**760**	**1020**	8.0	61	27	160	4.4	<2.0	134	250	160	2.60	<2.0	1.2	4.3	0.1	<0.10	<20	<3.00
	10-Jan-06																			
	1-Jul-06																			
	1-Jan-07																			
	1-Jul-07																			
	1-Jan-08																			
	3-Jun-08	**770**	**1320**	7.9	49	21	180	4.5	<2.0	99.8	210	210	2.00	1.7	1.2	1.6	<0.050	0.043	4.6	
	12-Aug-09																			
	21-Jul-10																			
	1-Jan-11																			
	1-Jan-12																			
	1-Jan-13																			
	1-Jan-14																			
Well 1	22-Jul-98	**800**	**1280**	7.6	92	31	150	4.6	0.0567	219	**280**	130	3.40	<2.0		17	0.18	<0.10	3.6	
	29-Jul-98																			
	15-Mar-99																			7.4
	17-Jun-99												2.01							4.0
	15-Jan-01																			
	1-May-01	**850**	**1190**	7.7	85	30	150	3.36	0.752	231	**293**	119	2.20	1.4		8.9	0.17	<0.10	<2.0	
	15-Jul-01																			
	14-Nov-01	**850**	**1300**	7.8	86	25	140	3.2	0.955	233	**320**	130	2.40	1.3	2.4	7.3	0.1	<0.10	<2.0	3.8
	15-Jan-02																			
	2-Apr-02	**860**	**1230**	7.7	92	32	150	3.6	0.752	231	**290**	110	2.20	1.3	2.4	7.7	0.18	<0.10	<2.0	8.9
	9-Jul-02	**840**	**1230**	7.8	84	30	150	3.5	0.947	231	**290**	120	2.30	1.3	2.3	7.1	0.19	<0.10	<2.0	2.6
	31-Oct-02	**840**	**1280**	7.6	92	31	140	3.5	0.595	230	**300**	120	2.20	1.5	2.4	6.7	0.18	<0.10	<2.0	2.45
	7-Jan-03	**850**	**1250**	7.7	91	32	150	3.4	0.778	239	**320**	130	2.40	1.1	2.6	8.3	0.16	<0.10	<2.0	1.9
	22-Apr-03	**850**	**1240**	7.7	81	30	140	3.2	0.752	231	**300**	120	2.30	1.5	2.3	7	0.17	<0.10	<2.0	<2.37
	3-Jul-03	**870**	**1290**	7.6	84	31	140	3.4	0.592	229	**290**	120	2.10	1.2	2.5	7.3	0.17	<0.10	<2.0	2.0
	21-Oct-03	**850**	**1300**	7.6	88	31	150	3.4	0.590	228	**310**	120	2.20	1.3	2.4	6.7	0.17	<0.10	<2.0	2.2
	28-Jan-04	**870**	**1310**	7.6	90	33	150	3.5	0.582	225	**290**	120	2.10	1.5	2.5	14	0.17	<0.10	<2.0	<2.09
	20-Apr-04	**890**	**1310**	7.8	90	32	160	3.5	0.914	223	**300**	130	2.50	<1.0	2.5	7.9	0.18	0.022	<2.0	<3.00
	19-Jul-04	**870**	**1240**	7.6	89	32	150	3.4	0.551	213	**310**	130	2.10	<2.0	2.5	7	0.17	<0.10	<20.0	<3.00
	14-Oct-04	**870**	**1230**	7.7	87	31	150	3.3	0.723	222	**290**	120	2.10	<2.0	2.6	9.2	0.17	<0.10	<20.0	<3.00
	25-Jan-05	**870**	**1280**	8.0	88	31	150	3.8	1.44	221	**300**	120	2.10	<2.0	2.4	12	0.18	<0.10	<20.0	<3.00
	19-Apr-05	**900**	**1260**	8.0	89	31	150	3.8	1.53	236	**310**	120	2.10	<2.0	2.4	6.6	0.18	<0.10	<20.0	<3.00
	22-Aug-05	**850**	**1300**	7.9	88	32	150	3.4	<2.0	219	**300**	120	2.00	<2.0	2.0	7.5	0.17	<0.10	<20.0	<3.00
	10-Oct-05	**850**	**1080**	8.0	89	32	150	3.4	<2.0	225	**300**	120	2.10	<2.0	2.5	11	0.20	<0.10	<20.0	<3.00
	28-Jan-06																			
	1-Jul-06																			
	1-Jan-07																			
	1-Jul-07																			
	1-Jan-08																			
	1-Jul-08																			
	12-Aug-09																			
	21-Jul-10																			
	1-Jan-11																			
	1-Jan-12																			
	16-Sep-13	**890**	**1300**	7.7	89	32	160	3.8	<2.0	220	**300**	130	2.00	<2.0	2.4	7	0.18	<0.10	<20.0	
	1-Jan-14																			

Bolded values are at or exceed the maximum contaminant level (MCL) for specified parameter.

CITY OF TRACY
GROUNDWATER QUALITY

WELL NAME	DATE SAMPLED	TDS (mg/L)	EC (uhmos/cm)	pH	Ca (mg/L)	Mg (mg/L)	Na (mg/L)	K (mg/L)	CO3 (mg/L)	HCO3 (mg/L)	SO4 (mg/L)	Cl (mg/L)	NO3 as N (mg/L)	As (ug/L)	B mg/L	Total Cr (ug/L)	F mg/L	Fe (mg/L)	Mn (ug/L)	Alpha Gross (pico curies/liter)
MCLs		500*	900*	6-8							250*	250*	10	50		50	2	0.3	50	100
Well 2	22-Jul-98	**830**	**1320**	7.5	94	33	150	4.9	0.477	232	**310**	130	2.10	<2.0		17	0.18	<0.10	<2.0	
	29-Jul-98																			3.5
	15-Mar-99																			4.4
	17-Jun-99												3.29							5.2
	15-Jan-01																			
	1-May-01	**910**	**1250**	7.8	90	32	150	3.5	0.984	240	**311**	125	2.00	1.4		8.7	0.16	<0.10	<2.0	
	15-Jul-01																			
	14-Nov-01	**930**	**1360**	7.7	92	33	160	3.5	0.782	240	**330**	130	2.00	1.1	2.5	6.7	0.19	<0.10	<2.0	8.2
	9-Jan-02	**910**	**1310**	7.6	96	33	150	3.3	0.616	238	**330**	130	2.00	1.3	2.5	7.3	0.18	<0.10	<2.0	4.3
	2-Apr-02	**890**	**1280**	7.6	98	35	160	3.6	0.616	238	**330**	130	2.00	1.3	2.5	6.9	0.18	<0.10	<2.0	5.2
	9-Jul-02	**890**	**1310**	7.6	90	32	160	3.6	0.618	239	**330**	130	2.50	1.3	2.5	7	0.18	<0.10	<2.0	<2.45
	31-Oct-02																			2.58
	15-Jan-03																			
	15-Apr-03																			
	15-Jul-03																			
	21-Oct-03																			
	28-Jan-04	**870**	**1320**	7.5	93	34	150	3.4	0.446	217	**300**	120	2.10	1.8	2.3	6.9	0.21	**0.97**	5.5	2.8
	20-Apr-04	**650**	**1010**	7.5	68	27	100	3.2	0.333	162	210	110	2.50	1.4	1.4	11	0.14	**2.9**	43	<3.00
	19-Jul-04	**910**	**1310**	7.5	94	34	150	3.4	0.444	216	**330**	130	2.10	<2.0	2.5	6	0.15	<.10	<20	<3.00
	14-Oct-04	**930**	**1310**	7.6	93	34	160	3.4	0.587	227	**310**	120	1.80	<2.0	2.6	9.7	0.16	0.15	<20	<3.00
	25-Jan-05	**870**	**1270**	8.0	90	32	140	3.7	1.36	210	**300**	130	2.40	<2.0	2.3	13	0.17	<.10	<20	<3.00
	20-Apr-05																			
	22-Aug-05	**850**	**1320**	7.9	91	34	150	3.4	<2.0	214	**300**	120	1.90	<2.0	2.3	6.9	0.16	<0.10	<20	<3.00
	15-Oct-05																			
	28-Jan-06																			
	1-Jul-06																			
	1-Jan-07																			
	1-Jul-07																			
	1-Jan-08																			
	3-Jun-08	**834**	**1270**	7.6	88	33	130	3.2	<2.0	179	**270**	130	2.50	<1.0	2.1	7.9	0.08	0.1	2.7	
	12-Aug-09	**720**	**1100**	7.9	78	28	120	<5.0	<2.0	180	250	110	1.90	<2.0	1.7	<10	0.13	0.21	<20	
	21-Jul-10	**600**	**920**	7.9	63	22	88	2.5	<2.0	160	190	91	1.60	<2.0	1.3	<10	0.12	<0.10	<20	
	1-Jan-11																			
	24-Oct-12	**610**	**940**	8	65	24	96	2.5	<2.0	160	190	86	5.60	<1.0	1.5	3.8	0.12	0.051	<2.0	
	1-Jan-13																			
	1-Jan-14																			
Well 3	22-Jul-98	**750**	**1150**	7.6	86	28	131	4.8	0.582	225	**270**	100	1.80	<2.0		15	0.2	<0.10	<2.0	
	29-Jul-98																			4.1
	15-Mar-99																			6.3
	17-Jun-99												1.90							6.6
	15-Jan-01																			
	1-May-01	**760**	**1090**	7.6	79	26	130	3.3	0.629	243	246	96	2.00	1.4		8.5	0.18	<0.10	<2.0	
	15-Jul-01																			
	14-Nov-01	**770**	**1180**	7.7	81	27	130	3.2	0.785	241	250	97	2.10	1.3	2.2	6.6	0.21	<0.10	<2.0	4.4
	9-Jan-02	**760**	**1000**	7.6	81	27	130	3	0.616	238	**260**	99	2.00	1.2	2.2	7.1	0.2	<0.10	<2.0	4.6
	2-Apr-02	**760**	**1120**	7.7	84	28	140	3.4	0.778	239	**260**	96	2.10	1.4	2.3	6.8	0.2	<0.10	<2.0	5.8
	9-Jul-02	**760**	**1100**	7.7	76	25	140	3.3	0.785	241	250	97	2.10	1.2	2.2	6.6	0.21	<0.10	<2.0	<1.86
	31-Oct-02	**760**	**1160**	7.7	86	28	130	3.2	0.785	241	250	100	2.10	1.3	2.3	5.8	0.2	<0.10	<2.0	1.66
	7-Jan-03	**760**	**1120**	7.8	80	26	130	3	0.984	240	240	98	2.60	1	2.2	8.2	0.18	<0.10	<2.0	<1.85
	22-Apr-03	**775**	**1130**	7.7	75	26	130	2.9	0.801	246	250	97	2.20	1.4	2.2	7.1	0.18	<0.10	<2.0	1.7
	3-Jul-03	**770**	**1160**	7.7	78	27	120	3.1	0.775	238	250	98	2.10	1.2	2.4	6.6	0.19	<0.10	<2.0	<1.69
	21-Oct-03	**760**	**1160**	7.7	82	27	130	3.1	0.775	238	250	100	2.50	<1.0	2.3	<1.0	0.19	0.013	<2.0	2.5
	28-Jan-04	**760**	**1180**	7.6	83	28	140	3.3	0.611	236	250	100	2.20	1.4	2.4	16	0.19	0.02	<2.0	2.4
	20-Apr-04	**770**	**1180**	7.6	82	28	140	3.3	0.603	233	**260**	110	2.50	<1.0	2.4	8.2	0.2	0.032	<2.0	<3.0
	19-Jul-04	**760**	**1120**	7.6	82	27	130	3.2	0.58	224	250	100	2.10	<2.0	2.4	6.3	0.17	<0.10	<20	3.6
	14-Oct-04	**770**	**1110**	7.7	81	27	130	3.1	0.759	233	240	94	2.20	<2.0	2.4	8.2	0.19	<0.10	<20	<3.0
	25-Jan-05	**770**	**1140**	8.0	81	27	130	3.5	1.49	230	250	100	2.20	<2.0	2.3	12	0.19	<0.10	<20	4.3
	19-Apr-05	**800**	**1160**	**8.1**	85	28	140	3.6	1.9	232	**270**	110	2.30	<2.0	2.3	6.8	0.2	<0.10	<20	<3.0
	22-Aug-05	**740**	**1170**	8.0	81	28	130	3.1	<2.0	230	250	99	2.20	<2.0	2.2	2.2	0.19	<0.10	<20	3.2
	10-Oct-05	**760**	**985**	7.9	82	28	140	3.2	<2.0	237	250	100	2.40	<2.0	2.3	10	0.21	<0.10	<20	<3.0
	28-Jan-06																			
	1-Jul-06																			
	1-Jan-07																			
	1-Jul-07																			
	1-Jan-08																			
	3-Jun-08	**780**	**1210**	7.7	81	27	130	3	<2.0	185	250	100	2.60	<1.0	2.3	8.5	0.11	<0.020	<2.0	
	12-Aug-09	**830**	**1300**	8.0	91	31	140	<5.0	<2.0	230	**300**	120	1.30	<2.0	2.3	<10	0.17	0.11	<20	
	21-Jul-10	**880**	**1300**	7.9	90	31	140	3.2	<2.0	240	**300**	120	1.90	<2.0	2.4	<10	0.18	<0.10	<20	
	6-Dec-11	**851**	**1290**	7.6	91.8	30.2	143	3.25			**290**	119	2.20	0.83	2.09	7.3	0.2	0.025	2.7	
	24-Oct-12	**810**	**1300**	8.0	87	31	140	3.4	<2.0	230	**280**	86	1.30	<1.0	2.5	3.6	0.19	0.052	<2.0	
	16-Sep-13	**830**	**1200**	7.7	84	29	140	3.8	<2.0	230	**270**	110	1.60	<2.0	2.4	4.9	0.19	0.021	<20	
	1-Jan-14																			

Bolded values are at or exceed the maximum contaminant level (MCL) for specified parameter.

CITY OF TRACY
GROUNDWATER QUALITY

WELL NAME	DATE SAMPLED	TDS (mg/L)	EC (uhmos/cm)	pH	Ca (mg/L)	Mg (mg/L)	Na (mg/L)	K (mg/L)	CO3 (mg/L)	HCO3 (mg/L)	SO4 (mg/L)	Cl (mg/L)	NO3 as N (mg/L)	As (ug/L)	B mg/L	Total Cr (ug/L)	F mg/L	Fe (mg/L)	Mn (ug/L)	Alpha Gross (pico curies/liter)
MCLs		500*	900*	6-8							250*	250*	10	50		50	2	0.3	50	100
Well 4	22-Jul-98	**660**	**1050**	7.6	80	26	110	4.8	0.458	177	220	110	4.20	<2.0		19	0.2	<0.10	2.8	
	29-Jul-98																			2.3
	15-Mar-99																			6.1
	17-Jun-99												4.41							2
	15-Jan-01																			
	1-May-01	**700**	**997**	7.8	75	25	110	3.3	0.795	194	207	98	3.60	2.0		11	0.18	<0.10	4.2	
	15-Jul-01																			
	14-Nov-01	**750**	**1120**	7.9	78	26	130	3.2	0.918	224	250	100	2.80	1.5	2.1	7.4	0.21	<0.10	<2.0	2.4
	9-Jan-02	**710**	**1070**	7.7	78	25	120	3	0.661	203	220	100	3.60	1.4	1.9	9.6	0.2	<0.10	<2.0	3.1
	2-Apr-02	**710**	**1070**	7.7	80	27	130	3.5	0.668	205	220	100	3.70	1.8	1.9	15	0.19	0.25	2.6	<2.14
	9-Jul-02	**740**	**1090**	7.8	76	26	120	3.5	0.832	203	250	100	2.30	1.4	1.8	6.9	0.2	<0.10	2.4	2.8
	31-Oct-02																			2.33
	15-Jan-03																			
	15-Apr-03																			
	3-Jul-03																			
	21-Oct-03																			
	28-Jan-04																			
	15-Apr-04																			
	19-Jul-04	**690**	**1060**	7.5	80	27	120	3.3	0.366	178	240	110	2.30	<2.0	1.8	6.5	0.21	<0.10	<20	<3.00
	14-Oct-04	**740**	**1080**	7.6	78	27	130	3.2	0.533	206	230	98	2.30	<2.0	2.1	8.3	0.19	<0.10	<20	<3.00
	25-Jan-05	**730**	**1100**	8.0	78	27	130	3.5	1.36	210	240	110	3.00	<2.0	2.1	14	0.19	<0.10	<20	<3.00
	19-Apr-05	**750**	**1100**	8.0	79	27	130	306	1.38	212	250	100	2.40	<2.0	2.0	6.2	0.2	<0.10	<20	<3.00
	22-Aug-05	**740**	**1130**	8.0	79	28	130	3.3	<2.0	208	240	100	2.40	<2.0	2.0	7.1	0.19	<0.10	<20	<3.00
	10-Oct-05	**740**	**966**	7.9	80	28	130	3.3	<2.0	213	250	100	2.40	<2.0	2.1	10	0.22	<0.10	<20	3.0
	28-Jan-06																			
	1-Jul-06																			
	1-Jan-07																			
	1-Jul-07																			
	1-Jan-08																			
	3-Jun-08	**716**	**1130**	7.7	77	27	120	3.1	<2.0	216	240	100	2.40	<1.0	2.1	7.6	0.28	<0.020	<2.0	
	12-Aug-09	**680**	**1000**	7.9	71	25	110	<5.0	<2.0	170	230	100	1.60	<2.0	1.6	<10	0.15	<0.10	<20	
	21-Jul-10	**510**	790	7.8	53	18	78	2.4	<2.0	140	150	78	2.10	<2.0	1.1	<10	0.12	<0.10	<20	
	1-Jan-11																			
	1-Jan-12	**670**	**1000**	8.0	71	26	110	3.1	<2.0	180	220	94	1.60	1.1	1.7	4.3	0.051	0.11	2.1	
	16-Sep-13	**720**	**1100**	7.7	77	28	130	3.9	<2.0	180	250	110	1.60	<2.0	1.8	5.2	0.18	0.072	<20	
	1-Jan-14																			
Well 5 (Lewis Manor)	15-Jan-01																			
	1-May-01																			
	15-Jul-01	**520**	**756**	8.0	36	14	110	2.5	0.962	148	156	75	0.40	3.5		<1.0	0.06	<0.10	**60**	
	3-Oct-01																			
	15-Jan-02																			
	15-Apr-02																			
	9-Jul-02	**650**	**963**	8.0	56	23	120	3.6	1.01	156	230	96	1.00	2.1	1.3	4.3	0.10	<0.10	26	2.8
	31-Oct-02	**680**	**1020**	7.9	63	26	120	3.9	0.805	156	240	99	1.10	<4.0	1.3	4.4	0.10	<0.10	17	1.92
	7-Jan-03	**700**	**1000**	7.9	63	26	110	3.5	0.841	163	**260**	110	1.40	1.4	1.3	4.1	0.10	<0.10	22	1.4
	22-Apr-03	**655**	**977**	7.9	56	25	110	3.2	0.821	159	240	98	1.10	2.0	1.3	4.7	0.09	<0.10	23	<1.86
	3-Jul-03	**670**	**1030**	7.9	59	26	110	3.5	0.805	156	240	98	1.10	1.8	1.4	4.4	0.09	<0.10	27	<1.22
	21-Oct-03	**700**	**1060**	7.8	56	24	98	3	0.623	152	**260**	110	1.20	<1.0	1.2	5.3	0.11	0.089	15	<2.00
	28-Jan-04	**670**	**1050**	7.8	62	27	120	3.7	0.64	156	240	97	1.10	2	1.4	9.9	0.10	<0.10	20	<2.00
	20-Apr-04	**510**	811	7.8	40	17	100	2.7	0.578	141	160	81	0.55	2.4	1.1	3.1	0.08	0.031	50	<3.00
	19-Jul-04	**670**	**1010**	7.8	62	26	120	3.6	0.615	150	240	100	1.10	<2.0	1.4	8.3	<0.10	<0.10	25	<3.00
	14-Oct-04																			
	25-Jan-05	**660**	**998**	**8.1**	61	26	120	3.8	1.24	151	240	99	1.10	<2.0	1.4	8.8	0.10	<0.10	<20	3.7
	19-Apr-05	420	655	**8.1**	31	12	92	2.4	0.949	116	120	71	<0.5	2.1	0.8	<1.0	<0.10	0.14	**82**	<3.00
	22-Aug-05	**640**	**1040**	7.9	61	26	120	3.6	<2.0	153	230	95	1.00	<2.0	1.3	5	<0.1	<0.10	26	<3.00
	10-Oct-05	**630**	846	8.0	59	25	120	3.5	<2.0	152	230	95	0.99	<2.0	0.99	<2.0	0.1	<0.10	23	<3.00
	15-Jan-06																			
	1-Jul-06																			
	1-Jan-07																			
	1-Jul-07																			
	1-Jan-08																			
	3-Jun-08	344	605	7.8	28	12	71	2.2	<2.0	98.6	88	56	<0.50	1.8	0.63	<1.0	<0.050	0.082	46	
	12-Aug-09	**650**	**1000**	8.0	62	26	120	<5.0	<2.0	150	240	100	1.00	<2.0	1.3	<10	<0.1	<0.10	32	
	21-Jul-10	380	600	7.9	27	11	78	2.1	<2.0	120	100	62	<0.40	2.4	0.65	<10	<0.1	<0.10	47	
	1-Jan-11																			
	23-Oct-12	390	690	8.0	31	13	100	2.6	<2.0	120	110	78	0.36	2.7	0.78	<1.0	<0.05	0.049	**74**	
	29-Aug-13	440	710	7.7	31	13	110	2.8	<2.0	130	120	75	1.00	2.0	0.75	<1.0	<0.05	0.021	73	
	1-Jan-14																			

Bolded values are at or exceed the maximum contaminant level (MCL) for specified parameter.

CITY OF TRACY
GROUNDWATER QUALITY

	MCLs	500*	900*	6-8							250*	250*	10	50			50	2	0.3	50	100
WELL NAME	DATE SAMPLED	TDS (mg/L)	EC (uhmos/cm)	pH	Ca (mg/L)	Mg (mg/L)	Na (mg/L)	K (mg/L)	CO3 (mg/L)	HCO3 (mg/L)	SO4 (mg/L)	Cl (mg/L)	NO3 as N (mg/L)	As (ug/L)	B mg/L	Total Cr (ug/L)	F mg/L	Fe (mg/L)	Mn (ug/L)	Alpha Gross (pico curies/liter)
Well 6 (Park & Ride)	15-Jan-01																			
	1-May-01																			
	15-Jul-01																			
	3-Oct-01																			
	15-Jan-02																			
	15-Apr-02																			
	15-Jul-02																			
	31-Oct-02	**720**	**1130**	**8.1**	51	21	150	3.6	0.998	122	**270**	130	0.98	3.3	1.2	<1.0	0.1	<0.10	4.7	<1.97
	7-Jan-03	**760**	**1130**	8.0	44	19	150	3.1	0.767	118	**300**	150	1.20	2.4	1.1	5.0	0.08	**1.2**	9.8	1.7
	22-Apr-03	**720**	**1090**	8.0	43	19	150	3.3	0.806	124	**260**	130	1.30	2.0	1.2	2.9	0.09	**0.33**	9.2	<1.77
	3-Jul-03	**710**	**1090**	8.0	50	25	130	3.4	0.871	134	**250**	120	0.91	2.4	1.3	4.2	0.1	<0.10	<2.0	<1.24
	21-Oct-03	**640**	**1040**	7.9	37	16	130	3	0.604	117	210	130	1.20	1.7	0.9	1.5	0.09	0.16	5	2.8
	28-Jan-04	**680**	**1100**	7.9	53	25	140	3.5	0.687	133	240	120	0.89	2.9	1.3	8.2	0.1	0.013	<2.0	<2.00
	20-Apr-04	**690**	**1080**	7.9	46	21	150	3.6	0.594	115	240	130	1.40	2.7	1.2	2.1	0.1	0.15	3	<3.00
	15-Jul-04																			
	14-Oct-04	**660**	**1030**	7.8	45	21	150	3.7	0.467	114	220	130	0.94	2.5	1.2	1.7	<0.1	<0.10	<20	<3.00
	25-Jan-05	**720**	**1110**	**8.1**	56	24	140	3.7	1.19	146	**260**	120	1.10	2.3	1.4	5.8	0.12	<0.10	<20	<3.00
	19-Apr-05	**680**	**1020**	**8.2**	51	24	140	3.8	1.33	129	240	120	0.92	2.4	1.2	3.8	0.11	<0.10	<20	<3.00
	22-Aug-05	**660**	**1060**	**8.1**	53	25	130	3.6	<2.0	129	240	120	0.94	2.1	1.2	4.9	0.1	<0.10	<20	<3.00
	10-Oct-05	**670**	**904**	**8.1**	50	23	140	3.6	<2.0	124	240	120	0.90	2.8	1.2	4.8	0.11	<0.10	<20	<3.00
	15-Jan-06																			
	1-Jul-06																			
	1-Jan-07																			
	1-Jul-07																			
	1-Jan-08																			
	3-Jun-08	**682**	**1060**	7.9	51	25	130	3.5	<2.0	90.1	230	110	0.89	2.3	1.3	5.6	0.05	<0.020	<2.0	
	12-Aug-09	**720**	**1100**	8.0	51	23	150	<5.0	<2.0	120	**260**	130	1.20	2.2	1.2		<0.1	<0.10	<20	
	21-Jul-10	**600**	**980**	8.0	40	18	130	3.1	<2.0	110	210	110	0.97	2.6	1	<10	<0.1	<0.10	<20	
	1-Jan-11																			
	23-Oct-12	**580**	**980**	8.0	42	19	140	3.4	<2.0	100	200	120	0.86	2.3	1	<1.0	0.081	0.025	2.1	
	5-Sep-13	**610**	**1000**	7.7	41	20	130	3.6	<2.0	100	200	120	0.77	2.8	1	<10	0.1	0.046	2.4	
	1-Jan-14																			
Well 7 (Ball Park)	15-Jan-01																			
	1-May-01																			
	15-Jul-01																			
	3-Oct-01																			
	15-Jan-02																			
	15-Apr-02																			
	15-Jul-02																			
	31-Oct-02	**750**	**1130**	7.8	78	32	120	3.8	0.668	163	**270**	120	1.50	1.9	1.5	7.6	0.11	<0.10	<2.0	1.86
	7-Jan-03	**700**	**1040**	7.9	75	32	130	3.8	0.831	161	240	110	1.60	1.8	1.6	11	0.10	<0.10	<2.0	1.8
	22-Apr-03	**740**	**1080**	7.8	66	30	110	3.4	0.681	166	**260**	120	1.90	2.1	1.5	8.6	0.10	<0.10	<2.0	<2.05
	3-Jul-03	**720**	**1100**	7.9	64	30	110	3.8	0.743	144	**260**	120	1.70	1.6	1.3	4.4	0.10	<0.10	<2.0	1.3
	21-Oct-03	**740**	**1130**	7.9	70	32	120	3.9	0.785	152	**270**	120	1.80	1.9	1.4	7.3	0.10	0.018	<2.0	<2.00
	28-Jan-04	**730**	**1140**	7.7	70	32	120	4	0.489	150	**260**	110	1.60	1.8	1.4	11	0.10	0.033	<2.0	<2.12
	20-Apr-04	**740**	**1100**	7.8	69	32	120	4.1	0.582	142	**270**	120	1.70	1.2	1.4	5.6	0.11	<0.01	<2.0	<3.00
	19-Jul-04	**740**	**1090**	7.8	69	31	120	4	0.554	135	**270**	120	1.70	<2.0	1.3	4.7	<0.10	<0.10	<20	<3.00
	14-Oct-04	**740**	**1090**	7.8	68	30	120	3.9	0.64	156	250	110	1.70	<2.0	1.5	8.3	0.11	<0.10	<20	<3.00
	25-Jan-05	**770**	**1150**	**8.1**	75	32	130	4	1.34	164	**280**	120	1.60	<2.0	1.8	12	0.12	<0.10	<20	<3.00
	19-Apr-05	**790**	**1120**	**8.1**	75	33	130	4	1.31	160	**280**	130	1.90	<2.0	1.6	7.9	0.12	<0.10	<20	<3.00
	22-Aug-05	**740**	**1120**	7.9	69	32	120	4.1	<2.0	141	**270**	110	1.60	<2.0	1.3	5.4	0.11	<0.10	<20	<3.00
	10-Oct-05	**740**	**969**	7.9	70	32	120	4	<2.0	147	**270**	120	1.60	<2.0	1.4	8.2	0.11	<0.10	<20	<3.00
	15-Jan-06																			
	1-Jul-06																			
	1-Jan-07																			
	1-Jul-07																			
	1-Jan-08																			
	3-Jun-08	**750**	**1140**	7.8	70	32	110	3.7	<2.0	151	**270**	110	1.60	1.1	1.5	8.1	0.05	<0.020	<2.0	
	12-Aug-09	**560**	**900**	8.0	54	24	94	<5.0	<2.0	120	190	94	1.10	<2.0	1.1	<10	<0.10	<0.10	<20	
	21-Jul-10	**760**	**1100**	7.9	68	30	120	3.7	<2.0	150	**270**	120	1.50	<2.0	1.3	<10	0.11	<0.10	<20	
	1-Jan-11																			
	23-Oct-12	**720**	**1100**	8.0	70	32	140	4.7	<2.0	130	**280**	120	1.50	1.7	1.4	2.2	0.11	<0.02	<2.0	
	5-Sep-13	**770**	**1200**	7.7	68	31	130	4.2	<2.0	130	**280**	120	1.50	<2.0	1.4	4.7	0.13	<0.10	<20	
	1-Jan-14																			

Bolded values are at or exceed the maximum contaminant level (MCL) for specified parameter.

CITY OF TRACY
GROUNDWATER QUALITY

WELL NAME	DATE SAMPLED	TDS (mg/L)	EC (uhmos/cm)	pH	Ca (mg/L)	Mg (mg/L)	Na (mg/L)	K (mg/L)	CO3 (mg/L)	HCO3 (mg/L)	SO4 (mg/L)	Cl (mg/L)	NO3 as N (mg/L)	As (ug/L)	B mg/L	Total Cr (ug/L)	F mg/L	Fe (mg/L)	Mn (ug/L)	Alpha Gross (pico curies/liter)
MCLs		500*	900*	6-8							250*	250*	10	50		50	2	0.3	50	100
Well 8 (ASR)	15-Jan-01																			
	1-May-01																			
	15-Jul-01																			
	3-Oct-01																			
	15-Jan-02																			
	15-Apr-02																			
	15-Jul-02																			
	31-Oct-02																			
	7-Jan-03																			
	22-Apr-03																			
	3-Jul-03																			
	21-Oct-03																			
	28-Jan-04																			
	20-Apr-04																			
	15-Jul-04																			
	15-Oct-04																			
	28-Jan-05																			
	20-Apr-05																			
	15-Jul-05																			
	15-Oct-05																			
	15-Jan-06																			
	1-Jul-06																			
	1-Jan-07																			
	1-Jul-07																			
	1-Jan-08																			
	1-Jul-08																			
	1-Jan-09																			
	1-Jan-10																			
	28-Feb-11	110			18	2.2	5.1				5.2	13								
	1-Jun-11	220	340	8.1	26	7.6	31				48	34		2.3			<0.02			
	1-May-12	96	140	8.2	19	2.9	5.3				12	6.3		<1.0			0.02			
	23-Oct-12	480	780	8.2	37	15	100	2.2	<2.0	140	140	78	<0.1	3.8	0.93	<1.0	0.05	0.15	55	
	19-Sep-13	200	340	8	22	6	36	1.7	<2.0	91	44	27	<2.0	2	0.25	<10		0.025	16	
	1-Jan-14																			
MW-1A	15-Jan-01																			
	1-May-01																			
	15-Jul-01																			
	3-Oct-01																			
	15-Jan-02																			
	15-Apr-02																			
	15-Jul-02																			
	15-Oct-02																			
	15-Jan-03																			
	15-Apr-03																			
	15-Jul-03																			
	23-Oct-03	410	684	8.0	24	8.8	95	1.5	1.05	161	97	52	<0.20	7.3	0.91	<1.0	<0.05	**0.58**	**130**	<2.00
	28-Jan-04	390	639	8.0	23	8.5	100	1.4	1.07	164	96	53	<0.20	6.1	0.93	6.9	<0.05	**0.46**	**100**	<2.00
	21-Apr-04	420	679	8.0	26	8.9	100	1.6	1.01	156	110	60	<0.10	7.2	0.95	1.5	<0.05	**0.71**	**88**	<3.00
	21-Jul-04	400	645	8.0	23	8.2	100	1.6	1.01	155	98	54	<0.20	7.2	0.94	1.2	<0.1	**0.98**	**98**	<3.00
	18-Oct-04	430	641	**8.1**	28	9.2	110	1.7	1.21	148	120	57	<0.50	8.4	0.95	<1.0	<0.1	**1.4**	**99**	<3.00
	25-Jan-05	420	553	**8.3**	25	8.6	100	1.7	2.07	160	110	57	<0.20	7.1	0.88	5.6	<0.050	**1.1**	**120**	<3.00
	19-Apr-05	420	647	**8.3**	26	8.7	100	1.8	1.97	152	120	60	<0.50	6.9	0.9	<1.0	<0.1	**1.4**	**100**	<3.00
	23-Aug-05	400	646	**8.3**	23	8.4	99	<2.0	2.05	158	98	51	<0.50	6.3	0.83	<0.5	<0.1	**1.2**	**120**	<3.00
	11-Oct-05	420	609	8.0	26	8.9	100	1.4	<2.0	155	110	57	<0.50	6.9	0.94	2.8	<0.1	**1.0**	**110**	<3.00
	19-Jan-06	418	701	**8.3**	24	8.3	92	1.4		150	120	60	<0.50	7.6	0.79	1.5	<0.1	**1.9**	**120**	<3.00
	1-Jul-06																			
	1-Jan-07																			
	1-Jul-07	386	633	**8.2**	20	8.5	110	1.7	<2.0	170	88	50	<0.50	3.4		<1.0	<0.1	**0.78**	**110**	
	1-Jan-08																			
	1-Jul-08	424	626	**8.2**	21	8.6	100	1.5	<2.0	172	91	52	<0.50	3.9	1	<1.0	<0.050	**2.0**	**130**	
	1-Jan-09																			
	1-Jan-10																			
	7-Jun-11	380	620	**8.5**	20	8.1	99	1.5	3.2	170	90	54	<0.2	3.2	0.94	<1.0	<0.05	**2.7**	**93**	
	1-Jan-12																			
	20-Feb-13	400	640	**8.8**	20	8	100	1.4	6.9	170	88	54	<0.2	5.9	0.94	<1.0	<0.05	**2.2**	**71**	
	1-Jan-14																			

Bolded values are at or exceed the maximum contaminant level (MCL) for specified parameter.

CITY OF TRACY
GROUNDWATER QUALITY

WELL NAME	DATE SAMPLED	TDS (mg/L)	EC (uhmos/cm)	pH	Ca (mg/L)	Mg (mg/L)	Na (mg/L)	K (mg/L)	CO3 (mg/L)	HCO3 (mg/L)	SO4 (mg/L)	Cl (mg/L)	NO3 as N (mg/L)	As (ug/L)	B mg/L	Total Cr (ug/L)	F mg/L	Fe (mg/L)	Mn (ug/L)	Alpha Gross (pico curies/liter)
	MCLs	500*	900*	6-8							250*	250*	10	50		50	2	0.3	50	100
MW-1B	15-Jan-01																			
	1-May-01																			
	15-Jul-01																			
	3-Oct-01																			
	15-Jan-02																			
	15-Apr-02																			
	15-Jul-02																			
	15-Oct-02																			
	15-Jan-03																			
	15-Apr-03																			
	15-Jul-03																			
	23-Oct-03	**700**	**1120**	7.7	76	31	110	3.4	0.599	184	230	85	<0.50	<1.0	1.7	7.2	0.13	**1.2**	33	<2.00
	28-Jan-04	**710**	**1080**	7.6	81	32	120	3.6	0.463	179	250	96	0.84	1.8	1.9	7.5	0.14	**1.1**	22	<2.00
	21-Apr-04	**700**	**1080**	**8.2**	73	33	120	3.5	1.82	177	**260**	100	0.20	<1.0	1.7	5.4	0.14	**4.4**	**82**	<3.00
	21-Jul-04	**660**	**1030**	7.7	70	30	110	3.2	0.531	163	240	97	<0.50	<2.0	1.7	5.7	0.13	**1**	27	<3.00
	18-Oct-04	**710**	**1030**	7.8	73	32	110	3.4	0.73	178	**260**	98	<0.50	<2.0	1.8	5.3	0.13	**3.1**	40	<3.00
	25-Jan-05	**730**	881	8.0	74	30	110	3.6	1.17	180	**260**	100	0.71	<1.0	1.6	11	0.15	**2.8**	40	<3.00
	19-Apr-05	**660**	**976**	**8.1**	61	29	110	3.6	1.26	154	250	100	<0.50	<2.0	1.6	<1.0	0.13	**1.5**	**240**	<3.00
	23-Aug-05	**650**	**972**	8.0	61	30	110	3	<2.0	152	240	96	<0.50	<2.0	1.6	3.2	0.13	**1.9**	**130**	<3.00
	11-Oct-05	**610**	839	7.6	42	27	110	3.2	<2.0	115	220	98	<0.50	<2.0	1.6	4.3	0.12	**3.9**	**220**	<3.00
	19-Jan-06	**544**	**921**	8.2	10	30	130	4.6	<2.0	110	200	98	<0.50	<1.0	0.96	1.2	0.083	**0.54**	46	<3.00
	1-Jul-06																			
	1-Jan-07																			
	1-Jul-07	**600**	**971**	**8.1**	42	33	100	3.3	<2.0	130	230	99	<0.50	<1.0		3.6	<0.10	**1.2**	48	
	1-Jan-08																			
	1-Jul-08	**568**	**925**	**8.2**	25	34	120	3.5	<2.0	113	230	100	<0.50	<1.0	1.8	3.2	0.08	**1.9**	**70**	
	1-Jan-09																			
	1-Jan-10																			
	7-Jun-11	460	790	**8.9**	9.6	21	120	3.8	4.6	84	180	91	<0.2	<1.0	1.6	<1.0	0.081	0.07	12	
	1-Jan-12																			
	20-Feb-13	480	830	**8.9**	12	24	120	3.6	3.8	81	180	93	<0.2	1.1	1.6	<1.0	0.076	0.27	22	
	1-Jan-14																			
MW-1C	15-Jan-01																			
	1-May-01																			
	15-Jul-01																			
	3-Oct-01																			
	15-Jan-02																			
	15-Apr-02																			
	15-Jul-02																			
	15-Oct-02																			
	15-Jan-03																			
	15-Apr-03																			
	15-Jul-03																			
	23-Oct-03	**660**	**1060**	7.8	60	28	100	3.4	0.582	142	240	95	<0.50	<1.0	1.1	<1.0	0.11	**2.8**	**290**	<2.00
	28-Jan-04	**700**	**1080**	7.8	74	35	110	4.1	0.627	153	**270**	110	<0.10	1.3	1.3	<1.0	0.11	**3.3**	**140**	<2.00
	21-Apr-04	**680**	**1050**	7.8	63	33	110	3.8	0.611	149	**260**	81	<0.20	<1.0	1.2	1.7	0.1	**3.4**	**150**	<3.00
	21-Jul-04	**640**	**993**	7.7	55	27	110	3.5	0.414	127	240	100	<0.50	<2.0	1	<1.0	0.1	**3.2**	**200**	<3.00
	18-Oct-04	**670**	**983**	7.8	58	30	120	3.9	0.533	130	250	100	<0.50	<2.0	1.2	<1.0	<0.1	**4.2**	**160**	<3.00
	25-Jan-05	**620**	802	7.8	45	31	110	4.1	0.459	112	250	100	<0.20	<1.0	1.1	3.1	0.096	**3.3**	**130**	<3.00
	19-Apr-05	**570**	875	7.5	34	28	110	4	1.181	88.1	230	110	<0.50	<2.0	1.1	<1.0	<0.1	**1.7**	**94**	<3.00
	23-Aug-05	**540**	836	**8.4**	20	26	110	3.4	<2.0	73.1	200	90	<0.50	<2.0	1	<1.0	<0.1	**0.82**	25	<3.00
	11-Oct-05	**520**	762	**9.2**	13	26	120	4	6.32	61.4	200	97	<0.50	<2.0	1.2	1.4	<0.1	**2.1**	27	<3.00
	19-Jan-06	442	813	7.7	7.9	22	110	4.1	<2.0	57	170	100	<0.50	<1.0	1	1.2	0.069	**1.3**	23	<3.00
	1-Jul-06																			
	1-Jan-07																			
	1-Jul-07	462	800	**9.0**	13	21	120	3.9	4.2	65	170	100	<0.50	<1.0		<1.0	<0.10	0.11	14	
	1-Jan-08																			
	1-Jul-08	424	773	**8.9**	9.2	16	110	3.4	3.1	59.4	160	110	<0.50	<2.0	0.98	<2.0	0.07	0.22	14	
	1-Jan-09																			
	1-Jan-10																			
	7-Jun-11	430	710	**9.1**	5.5	15	110	4	5.5	71	120	99	<0.20	<1.0	1	<1.0	0.075	**1.1**	20	
	1-Jan-12																			
	20-Feb-13	420	730	**9.2**	7	15	120	3.7	7.6	69	120	100	<0.20	3.6	1	<1.0	0.068	**1**	21	
	1-Jan-14																			

Bolded values are at or exceed the maximum contaminant level (MCL) for specified parameter.

CITY OF TRACY
GROUNDWATER QUALITY

WELL NAME	DATE SAMPLED	TDS (mg/L)	EC (uhmos/cm)	pH	Ca (mg/L)	Mg (mg/L)	Na (mg/L)	K (mg/L)	CO3 (mg/L)	HCO3 (mg/L)	SO4 (mg/L)	Cl (mg/L)	NO3 as N (mg/L)	As (ug/L)	B mg/L	Total Cr (ug/L)	F mg/L	Fe (mg/L)	Mn (ug/L)	Alpha Gross (pico curies/liter)
MCLs		500*	900*	6-8							250*	250*	10	50		50	2	0.3	50	100
MW-2A	15-Jan-01																			
	1-May-01																			
	15-Jul-01																			
	3-Oct-01																			
	15-Jan-02																			
	15-Apr-02																			
	15-Jul-02																			
	15-Oct-02																			
	15-Jan-03																			
	15-Apr-03																			
	15-Jul-03																			
	23-Oct-03	400	690	8.0	28	10	95	1.3	0.682	105	130	58	<0.20	2.1	0.89	1.0	0.09	**2.6**	47	<2.00
	28-Jan-04	400	674	**8.1**	29	11	99	1.3	0.867	106	130	61	<0.10	3.2	0.97	<1.0	0.09	**3.2**	**62**	<2.00
	22-Apr-04	410	675	**8.2**	29	10	96	1.3	1.1	103	140	64	<0.20	3	0.91	<1.0	<0.1	**1.2**	42	<3.00
	21-Jul-04	400	664	**8.1**	29	10	95	1.3	0.834	102	140	63	<0.20	<2.0	0.9	<1.0	<0.1	**1.1**	33	<3.00
	18-Oct-04	410	639	**8.2**	30	11	100	1.4	1.05	102	150	66	<0.20	4.1	1	<1.0	<0.1	**0.67**	31	<3.00
	25-Jan-05	410	551	**8.3**	27	10	95	1.5	1.36	105	140	63	<0.20	3.8	0.82	<1.0	0.099	**4.8**	**69**	<3.00
	19-Apr-05	410	637	**8.2**	27	10	97	1.5	1.05	102	140	63	<0.50	4	0.87	<1.0	<0.1	**1.5**	**65**	<3.00
	23-Aug-05	400	642	**8.1**	28	10	92	<2.0	<2.0	100	140	59	<0.5	4.3	0.8	6.22	<0.1	**1.6**	39	<3.00
	11-Oct-05	440	630	**8.1**	28	10	95	1.1	<2.0	103	140	61	<0.5	4.1	0.91	2.1	<0.1	**2.1**	49	<3.00
	17-Jan-06	410	664	**8.2**	27	10	93	1.2	<2.0	110	130	57	<0.50	3.9	0.85	1.5	0.077	**0.44**	43	<3.00
	1-Jul-06																			
	1-Jan-07																			
	1-Jul-07	406	676	**8.2**	28	11	97	1.4	<2.0	100	140	63	<0.50	4.2		<1.0	<0.10	**0.58**	35	
	1-Jan-08																			
	1-Jul-08	428	686	8.0	26	9.8	90	1.1	<2.0	105	150	65	<0.50	4.2	0.85	<2.0	0.08	**0.51**	38	
	1-Jan-09																			
	1-Jan-10																			
	7-Jun-11	420	640	**8.4**	25	11	110	1.7	<2.0	97	140	66	<0.20	<1.0	0.93	<1.0	0.093	**1.4**	27	
	1-Jan-12																			
	21-Feb-13	340	590	**8.8**	9.8	7.8	98	1.2	2.9	78	110	63	<0.20	5.8	0.85	<1.0	0.078	**1.4**	9	
	1-Jan-14																			
MW-2B	15-Jan-01																			
	1-May-01																			
	15-Jul-01																			
	3-Oct-01																			
	15-Jan-02																			
	15-Apr-02																			
	15-Jul-02																			
	15-Oct-02																			
	15-Jan-03																			
	15-Apr-03																			
	15-Jul-03																			
	23-Oct-03	**810**	**1260**	7.6	94	38	120	3.9	0.517	200	**290**	110	0.63	<1.0	2	5.6	0.13	**5**	33	<2.00
	28-Jan-04	**840**	**1230**	7.6	97	39	120	4.1	0.51	197	**290**	110	1.00	1.8	2.1	20	0.14	**4.1**	21	<2.28
	22-Apr-04	**790**	**1190**	7.9	78	37	120	3.9	0.87	169	**290**	120	0.21	<2.0	2	4.6	0.12	**2**	**510**	<3.00
	21-Jul-04	**820**	**1210**	7.6	94	38	120	3.8	0.473	183	**300**	110	0.98	<2.0	1.8	30	0.12	**3.6**	24	<3.00
	18-Oct-04	**830**	**1160**	7.5	89	36	120	3.8	0.397	193	**310**	110	1.00	<2.0	2	24	0.12	**2**	<20	<3.00
	25-Jan-05	**750**	**908**	7.9	91	36	120	4.1	1.29	198	**300**	120	1.10	<2.0	1.9	38	0.15	**4.1**	29	<3.00
	19-Apr-05	**840**	**1160**	8	92	36	120	4.1	1.25	193	**310**	120	1.10	<2.0	1.9	39	0.15	**5.9**	43	<3.00
	23-Aug-05	**810**	**1170**	7.8	88	36	110	3.5	<2.0	189	**290**	110	1.00	<2.0	1.8	**85**	0.14	**1.6**	33	4.5
	11-Oct-05	**820**	**1090**	7.8	91	38	120	3.8	<2.0	190	**300**	120	0.75	<2.0	1.9	**99**	0.15	**4.4**	70	<3.00
	17-Jan-06	**784**	**1260**	7.8	88	36	110	3.6	<2.0	200	**290**	110	1.10	9.8	1.8	14	0.12	**3**	15	<3.00
	1-Jul-06																			
	1-Jan-07																			
	1-Jul-07	**840**	**1210**	7.8	91	39	130	4	<2.0	190	**310**	120	0.97	<1.0		6.8	0.14	**0.4**	14	
	1-Jan-08																			
	1-Jul-08	**790**	**1240**	7.7	87	36	110	3.5	<2.0	198	**320**	120	1.00	<1.0	1.9	8.2	0.13	**0.047**	2.9	
	1-Jan-09																			
	1-Jan-10																			
	7-Jun-11	**870**	**1200**	7.9	90	38	120	4	<2.0	190	**310**	120	1.00	<1.0	2	9.5	0.15	**1.8**	28	
	1-Jan-12																			
	21-Feb-13	**810**	**1200**	**8.1**	87	38	120	3.7	<2.0	190	**300**	120	0.98	2.5	2	8.7	0.14	**0.51**	11	
	1-Jan-14																			

Bolded values are at or exceed the maximum contaminant level (MCL) for specified parameter.

CITY OF TRACY
GROUNDWATER QUALITY

WELL NAME	DATE SAMPLED	TDS (mg/L)	EC (uhmos/cm)	pH	Ca (mg/L)	Mg (mg/L)	Na (mg/L)	K (mg/L)	CO3 (mg/L)	HCO3 (mg/L)	SO4 (mg/L)	Cl (mg/L)	NO3 as N (mg/L)	As (ug/L)	B mg/L	Total Cr (ug/L)	F mg/L	Fe (mg/L)	Mn (ug/L)	Alpha Gross (pico curies/liter)
	MCLs	500*	900*	6-8							250*	250*	10	50		50	2	0.3	50	100
MW-2C	15-Jan-01																			
	1-May-01																			
	15-Jul-01																			
	3-Oct-01																			
	15-Jan-02																			
	15-Apr-02																			
	15-Jul-02																			
	15-Oct-02																			
	15-Jan-03																			
	15-Apr-03																			
	15-Jul-03																			
	23-Oct-03	**720**	**1140**	7.6	77	34	110	4.4	0.401	155	250	96	0.59	<1.0	1.4	11	0.13	**12**	47	3.3
	28-Jan-04	**740**	**1120**	7.6	83	35	110	4.6	0.398	154	**260**	100	0.95	1.7	1.5	6.4	0.13	**1.5**	5.4	<2.00
	22-Apr-04	**750**	**1120**	7.8	82	36	110	4.5	0.62	152	**280**	110	0.94	<2.0	1.4	7.7	0.13	**3.9**	20	<3.00
	21-Jul-04	**760**	**1090**	7.7	76	33	100	4.2	0.476	146	**270**	110	0.86	<2.0	1.4	7.9	0.12	**7.5**	40	<3.00
	18-Oct-04	**740**	**1040**	7.7	75	34	110	4.5	0.489	150	**280**	110	0.76	<2.0	1.4	5.7	0.13	**9.1**	**55**	<3.00
	25-Jan-05	**750**	**908**	7.9	78	34	110	4.7	0.805	156	**280**	110	0.92	<2.0	1.4	7	0.15	**4.1**	29	<3.00
	19-Apr-05	**730**	**1050**	8	76	33	110	4.4	0.975	150	**280**	110	0.93	<2.0	1.4	7.2	0.14	**8.8**	45	<3.00
	23-Aug-05	**710**	**1010**	7.7	67	34	110	4	<2.0	134	**260**	100	0.54	<2.0	1.2	11	0.13	**7.2**	**100**	<3.00
	11-Oct-05	**740**	897	7.9	74	33	110	4.2	<2.0	152	**270**	110	0.72	<2.0	1.3	6.8	0.15	**5.1**	**57**	<3.00
	17-Jan-06	**708**	**999**	7.9	77	34	100	4.1	<2.0	150	**260**	100	0.92	1.4	1.3	8	0.12	**4.5**	26	<3.00
	1-Jul-06																			
	1-Jan-07																			
	1-Jul-07	**742**	**1110**	7.9	81	34	99	4	<2.0	150	**280**	110	0.92	<1.0		5.4	0.13	**1.9**	22	
	1-Jan-08																			
	1-Jul-08	**676**	**982**	**8.1**	41	31	100	4.1	<2.0	129	240	110	0.52	<2.0	1.3	3.8	0.1	**0.62**	**51**	
	1-Jan-09																			
	1-Jan-10																			
	7-Jun-11	**740**	**1100**	**8.1**	74	36	110	4.6	<2.0	140	**270**	110	<0.25	<1.0	1.3	1.9	0.13	**1.5**	**240**	
	1-Jan-12																			
	21-Feb-13	**750**	**1100**	**8.1**	73	34	110	4.1	<2.0	150	**280**	110	0.91	2.9	1.4	7	0.13	**1.8**	13	
	1-Jan-14																			
MW-3A	15-Jan-01																			
	1-May-01																			
	15-Jul-01																			
	3-Oct-01																			
	15-Jan-02																			
	15-Apr-02																			
	15-Jul-02																			
	15-Oct-02																			
	15-Jan-03																			
	15-Apr-03																			
	15-Jul-03																			
	22-Oct-03																			
	28-Jan-04																			
	23-Apr-04	370	667	**8.5**	15	14	99	3.5	1.11	53.9	130	83	<0.20	<1.0	1	<1.0	<0.05	**1.1**	**100**	<3.00
	21-Jul-04	350	626	**8.6**	11	13	94	3.3	1.42	55	120	83	<0.20	<2.0	0.9	<1.0	<0.1	**1.1**	**52**	<3.00
	20-Oct-04	340	596	**8.2**	10	13	98	3.5	0.603	58.5	120	81	<0.20	<2.0	0.97	<1.0	<0.1	**1**	43	<3.00
	25-Jan-05	350	521	**8.7**	9.3	12	95	3.5	1.87	57.5	120	81	<0.20	<1.0	0.9	<1.0	0.057	**1.2**	**53**	<3.00
	19-Apr-05	350	587	**8.6**	9.2	12	95	3.3	1.54	59.7	120	83	<0.50	<2.0	0.92	<1.0	<0.1	**1**	**48**	<3.00
	23-Aug-05	350	596	**8.6**	10	12	92	3.2	<2.0	60.5	120	79	<0.50	<2.0	0.83	<1.0	<0.1	**2**	**78**	<3.00
	11-Oct-05	370	515	**8.3**	10	13	94	3.2	<2.0	64	110	79	<0.50	<2.0	0.92	<1.0	<0.1	**1.4**	**77**	<3.00
	17-Jan-06	348	637	**8.5**	9.8	13	92	3.2	<2.0	66	110	76	<0.50	<2.0	0.92	<0.1	<0.1	**1.7**	**58**	<3.00
	1-Jul-06																			
	1-Jan-07																			
	1-Jul-07	330	612	**8.8**	7.4	11	99	3.3	2.8	68	110	79	<0.50	<1.0		<1.0	<0.10	**0.78**	37	
	1-Jan-08																			
	1-Jul-08	356	609	**9.1**	3.9	8.8	97	3.3	5.8	70.3	110	76	<0.50	<2.0	0.91	<2.0	<0.05	**0.43**	18	
	1-Jan-09																			
	1-Jan-10																			
	6-Jun-11	330	590	**9.6**	2.3	5.6	110	4.1	19	71	100	69	<0.20	<1.0	0.86	<1.0	<0.05	**2.5**	30	
	1-Jan-12																			
	21-Feb-13	330	590	**9.6**	1.8	3.6	110	3.7	23	79	92	66	<0.20	1.9	0.86	<1.0	<0.05	**1.6**	24	
	1-Jan-14																			

Bolded values are at or exceed the maximum contaminant level (MCL) for specified parameter.

CITY OF TRACY
GROUNDWATER QUALITY

WELL NAME	DATE SAMPLED	TDS (mg/L)	EC (uhmos/cm)	pH	Ca (mg/L)	Mg (mg/L)	Na (mg/L)	K (mg/L)	CO3 (mg/L)	HCO3 (mg/L)	SO4 (mg/L)	Cl (mg/L)	NO3 as N (mg/L)	As (ug/L)	B mg/L	Total Cr (ug/L)	F mg/L	Fe (mg/L)	Mn (ug/L)	Alpha Gross (pico curies/liter)
	MCLs	500*	900*	6-8							250*	250*	10	50		50	2	0.3	50	100
MW-3B	15-Jan-01																			
	1-May-01																			
	15-Jul-01																			
	3-Oct-01																			
	15-Jan-02																			
	15-Apr-02																			
	15-Jul-02																			
	15-Oct-02																			
	15-Jan-03																			
	15-Apr-03																			
	15-Jul-03																			
	22-Oct-03																			
	28-Jan-04																			
	23-Apr-04	400	789	7.1	4.8	20	120	3.6	0.09	110	64	150	<0.20	<1.0	1.3	<1.0	0.09	**0.84**	39	<3.00
	21-Jul-04	400	762	**9.0**	4	18	110	3.4	7.28	112	55	150	<0.20	<2.0	1.2	<1.0	<0.1	**1.3**	39	<3.00
	20-Oct-04	400	732	**9.1**	4.1	19	130	3.9	9.24	113	53	140	<0.20	<2.0	1.2	<1.0	<0.1	**1.5**	44	<3.00
	25-Jan-05	420	665	**8.9**	3.2	18	120	3.8	6.19	120	60	140	<0.20	<1.0	1.2	<1.0	0.1	**1**	37	<3.00
	19-Apr-05	400	741	**9.0**	3.3	19	120	4	7.73	119	66	140	<0.50	<2.0	1.2	<1.0	<0.1	**1**	34	<3.00
	23-Aug-05	410	751	**9.2**	3	18	120	3.5	11.8	115	66	130	<0.50	<2.0	1.2	<1.0	<0.1	**0.51**	37	<3.00
	11-Oct-05	430	645	**9.2**	3	18	130	3.8	12.2	118	68	130	<0.50	0.1	1.3	2.1	0.1	**0.53**	29	<3.00
	17-Jan-06	410	801	**9.3**	2.6	18	120	3.8	16	120	65	130	<.50	<1.0	1.2	1.7	0.076	**0.65**	22	<3.00
	1-Jul-06																			
	1-Jan-07																			
	1-Jul-07	430	797	**9.3**	2.6	17	130	4.4	16	120	76	140	<0.50	<1.0		<1.0	<0.10	**0.44**	18	
	1-Jan-08																			
	1-Jul-08	448	811	**9.1**	2.4	15	130	4.1	10	128	85	140	<0.50	<2.0	1.3	<2.0	0.08	0.18	17	
	1-Jan-09																			
	1-Jan-10																			
	6-Jun-11	460	810	**9.2**	2.6	14	140	4.8	12	110	100	120	<0.20	<1.0	1.3	<1.0	0.094	**3.1**	44	
	1-Jan-12																			
	21-Feb-13	440	820	**9.3**	2.2	14	140	4.6	16	120	93	120	<0.25	2	1.3	<1.0	0.087	**0.49**	19	
	1-Jan-14																			
MW-3C	15-Jan-01																			
	1-May-01																			
	15-Jul-01																			
	3-Oct-01																			
	15-Jan-02																			
	15-Apr-02																			
	15-Jul-02																			
	15-Oct-02																			
	15-Jan-03																			
	15-Apr-03																			
	15-Jul-03																			
	22-Oct-03																			
	28-Jan-04																			
	23-Apr-04	**610**	**944**	**8.4**	34	31	120	4.7	1.04	63.7	230	110	<0.20	<1.0	1.5	<1.0	0.08	**3.5**	**230**	<3.00
	21-Jul-04	500	848	**8.7**	15	29	110	4.3	1.57	48.3	210	120	<0.20	<2.0	1.6	<1.0	<0.1	**1.4**	**72**	<3.00
	15-Oct-04	490	808	**8.7**	13	30	120	4.4	1.64	50.3	198	110	<0.20	<2.0	1.4	<1.0	<0.1	**1.9**	**81**	<3.00
	25-Jan-05	**510**	726	**8.8**	11	28	110	4.3	2.13	51.9	200	110	<0.20	<2.0	1.4	<1.0	<0.1	**0.98**	**62**	<3.00
	19-Apr-05	500	804	**8.8**	11	28	110	4.4	2.12	51.7	200	110	<0.50	<2.0	1.4	<1.0	<0.1	**1.5**	**56**	<3.00
	23-Aug-05	460	785	**8.8**	10	30	120	4.1	2.12	51.7	180	110	<0.50	<2.0	1.3	<1.0	<0.1	**1.6**	**64**	<3.00
	11-Oct-05	**510**	686	**8.8**	9.5	28	120	4.2	2.13	51.9	180	110	<0.50	<2.0	1.5	<1.0	<0.1	**2.7**	**83**	<3.00
	17-Jan-06	458	834	**8.8**	8.2	26	110	3.9	2.3	56	170	100	<0.50	<1.0	1.4	<1.0	0.061	**0.73**	36	<3.00
	1-Jul-06																			
	1-Jan-07																			
	1-Jul-07	442	789	8.0	6.5	25	120	4.3	<2.0	67	150	110	<0.50	<1.0		<1.0	<0.10	**1.1**	36	
	1-Jan-08																			
	1-Jul-08	424	742	**9.1**	4.8	19	110	3.8	5.2	63.2	140	110	<0.50	<2.0	1.4	<2.0	0.07	0.27	27	
	1-Jan-09																			
	1-Jan-10																			
	6-Jun-11	410	720	**9.1**	4	17	110	4.2	6.2	69	120	110	<0.20	<1.0	1.4	<1.0	0.083	**4.5**	**76**	
	1-Jan-12																			
	21-Feb-13	410	730	**9.1**	3.4	15	120	4	5.8	72	110	110	<0.20	1.4	1.5	<1.0	0.076	**2.3**	**59**	
	1-Jan-14																			

Bolded values are at or exceed the maximum contaminant level (MCL) for specified parameter.

CITY OF TRACY
GROUNDWATER QUALITY

WELL NAME	DATE SAMPLED	TDS (mg/L)	EC (uhmos/cm)	pH	Ca (mg/L)	Mg (mg/L)	Na (mg/L)	K (mg/L)	CO3 (mg/L)	HCO3 (mg/L)	SO4 (mg/L)	Cl (mg/L)	NO3 as N (mg/L)	As (ug/L)	B mg/L	Total Cr (ug/L)	F mg/L	Fe (mg/L)	Mn (ug/L)	Alpha Gross (pico curies/liter)
	MCLs	500*	900*	6-8							250*	250*	10	50		50	2	0.3	50	100
MW-4A	15-Jan-01																			
	1-May-01																			
	15-Jul-01																			
	3-Oct-01																			
	15-Jan-02																			
	15-Apr-02																			
	15-Jul-02																			
	15-Oct-02																			
	15-Jan-03																			
	15-Apr-03																			
	15-Jul-03																			
	15-Oct-03																			
	15-Jan-04																			
	21-Apr-04	360	659	**9.2**	8.2	10	110	2.3	8.88	86.2	110	81	<0.20	<1.0	0.91	<1.0	0.07	**0.63**	44	<3.00
	22-Jul-04	340	632	**9.1**	4.5	9.2	110	2.1	7.49	91.5	97	82	<0.20	<2.0	0.83	<1.0	<0.1	0.2	<20	<3.00
	20-Oct-04	340	589	**9.2**	4.6	9.3	120	2.4	9.67	93.9	90	79	<0.20	<2.0	0.83	<1.0	<0.1	**0.99**	<20	<3.00
	25-Jan-05	350	606	**9.2**	4.2	8.8	110	2.5	9.77	94.9	94	79	<0.20	<1.0	0.83	<1.0	0.067	**0.76**	19	<3.00
	19-Apr-05	350	613	**9.1**	4.1	8.6	110	2.4	7.7	94.1	93	78	<0.50	<2.0	0.8	<1.0	<0.1	**0.52**	<20	<3.00
	24-Aug-05	340	614	**9.3**	3.8	8.3	110	2.3	12.5	96.2	85	74	<0.50	<2.0	0.79	<1.0	<0.1	**0.35**	<20	<3.00
	12-Oct-05	350	514	**9.2**	3.6	7.8	110	2.1	10.1	98.5	85	77	<0.50	<2.0	0.77	1.2	<0.1	**0.42**	<20	<3.00
	17-Jan-06	316	623	**9.3**	3.5	7.7	110	2.2	13	100	79	75	<0.50	<1.0	0.76	1.2	0.054	**0.49**	13	<3.00
	1-Jul-06																			
	1-Jan-07																			
	1-Jul-07	324	595	**9.4**	2.6	6.8	110	2.4	20	120	64	77	<0.50	<1.0		<1.0	<0.10	**0.67**	12	
	1-Jan-08																			
	1-Jul-08	330	583	**9.2**	2.6	6.2	110	2.3	13	128	60	79	<0.50	<2.0	0.78	<2.0	0.07	0.26	12	
	1-Jan-09																			
	1-Jan-10																			
	6-Jun-11	330	570	**9.2**	2.2	5.6	110	2.4	14	130	48	78	<0.2	<1.0	0.79	<1.0	0.053	**1.4**	15	
	1-Jan-12																			
	20-Feb-13	320	570	**9.4**	2	4.9	110	2.1	22	130	43	75	<0.2	3.5	0.74	<1.0	<0.25	**1**	13	
	1-Jan-14																			
MW-4B	15-Jan-01																			
	1-May-01																			
	15-Jul-01																			
	3-Oct-01																			
	15-Jan-02																			
	15-Apr-02																			
	15-Jul-02																			
	15-Oct-02																			
	15-Jan-03																			
	15-Apr-03																			
	15-Jul-03																			
	15-Oct-03																			
	15-Jan-04																			
	21-Apr-04	330	592	**9.1**	8.2	14	95	3.1	6.14	75	110	72	<0.10	<1.0	0.87	<1.0	0.14	0.19	22	<3.00
	22-Jul-04	320	578	**9.2**	5.5	13	90	3	8.38	81.4	92	71	<0.20	<2.0	0.81	<1.0	0.12	0.19	<20	<3.00
	20-Oct-04	310	545	**9.3**	5.7	13	98	3.4	11.4	87.7	85	69	<0.20	<2.0	0.82	<1.0	0.14	**0.58**	23	<3.00
	25-Jan-05	300	554	**9.2**	4.7	12	90	3.2	8.54	82.9	90	71	<0.20	<1.0	0.76	<1.0	0.14	**0.5**	26	<3.00
	19-Apr-05	300	569	**9.1**	4.7	12	89	3.2	6.87	84	90	70	<0.50	<2.0	0.77	<1.0	0.14	**0.34**	22	<3.00
	24-Aug-05	300	557	**9.3**	4.6	12	92	3.2	10.5	83.5	84	66	<0.50	<2.0	0.74	<1.0	0.14	**0.39**	24	<3.00
	12-Oct-05	340	461	**9.2**	4.3	11	86	3.1	8.71	84.6	86	68	<0.50	<2.0	0.76	1.1	0.15	0.28	24	<3.00
	17-Jan-06	292	575	**9.1**	4.3	11	89	3	7.2	88	82	67	<0.50	<1.0	0.74	1.1	0.12	**0.34**	23	<3.00
	1-Jul-06																			
	1-Jan-07																			
	1-Jul-07	300	550	**9.3**	3.7	11	94	3.2	13	98	72	69	<0.50	<1.0		<1.0	0.13	**0.35**	21	
	1-Jan-08																			
	1-Jul-08	290	551	**9.2**	3.3	10	90	3.1	20	191	67	68	<0.50	<2.0	0.81	<2.0	0.13	0.21	20	
	1-Jan-09																			
	1-Jan-10																			
	6-Jun-11	300	520	**9.3**	2.6	8.6	90	3.1	12	100	56	71	<0.20	<1.0	0.76	<1.0	0.13	**0.88**	23	
	1-Jan-12																			
	20-Feb-13	290	530	**9.4**	2.4	7.7	92	3	16	100	50	70	<0.20	3.6	0.75	<1.0	0.12	**0.81**	17	
	1-Jan-14																			

Bolded values are at or exceed the maximum contaminant level (MCL) for specified parameter.

CITY OF TRACY
GROUNDWATER QUALITY

WELL NAME	DATE SAMPLED	TDS (mg/L)	EC (uhmos/cm)	pH	Ca (mg/L)	Mg (mg/L)	Na (mg/L)	K (mg/L)	CO3 (mg/L)	HCO3 (mg/L)	SO4 (mg/L)	Cl (mg/L)	NO3 as N (mg/L)	As (ug/L)	B mg/L	Total Cr (ug/L)	F mg/L	Fe (mg/L)	Mn (ug/L)	Alpha Gross (pico curies/liter)
MCLs		500*	900*	6-8							250*	250*	10	50		50	2	0.3	50	100
MW-4C	15-Jan-01																			
	1-May-01																			
	15-Jul-01																			
	3-Oct-01																			
	15-Jan-02																			
	15-Apr-02																			
	15-Jul-02																			
	15-Oct-02																			
	15-Jan-03																			
	15-Apr-03																			
	15-Jul-03																			
	15-Oct-03																			
	15-Jan-04																			
	21-Apr-04	**620**	**1010**	7.4	39	32	120	4.5	0.0917	56.2	**290**	120	<0.20	<1.0	1.1	<1.0	0.07	**2.3**	**180**	<3.00
	22-Jul-04	**570**	**944**	7.9	22	30	120	4.2	0.222	43.1	**260**	110	0.41	<2.0	1	<1.0	<0.1	0.2	**64**	<3.00
	20-Oct-04	**530**	869	**9.0**	18	29	120	4.6	2.64	40.7	240	110	<0.20	<2.0	1.1	<1.0	<0.1	<0.1	<20	<3.00
	25-Jan-05	**510**	854	**8.5**	15	28	120	4.9	0.843	41	210	110	<0.20	<1.0	0.97	<1.0	0.058	**0.51**	38	<3.00
	19-Apr-05	**520**	875	8.0	14	28	120	4.6	0.276	42.4	221	110	<0.50	<2.0	0.98	2	<0.1	**0.32**	44	<3.00
	24-Aug-05	500	854	7.9	13	27	120	4.6	<2.0	44.9	200	110	<0.50	<2.0	0.96	<1.0	<0.1	0.12	41	<3.00
	12-Oct-05	**530**	702	8.0	13	26	110	4.4	<2.0	44.5	200	110	<0.50	<2.0	0.94	<1.0	<0.1	**0.31**	48	<3.00
	17-Jan-06	496	879	7.9	13	25	110	4.6	<2.0	49	180	100	<0.50	<2.0	0.86	<1.0	0.051	**0.19**	43	<3.00
	1-Jul-06																			
	1-Jan-07																			
	1-Jul-07	490	615	**8.6**	9.8	25	120	4.7	<2.0	55	180	110	<0.50	<1.0		<1.0	<0.10	**0.41**	40	
	1-Jan-08																			
	1-Jul-08	458	801	**8.6**	8.1	24	110	4.7	<2.0	61.4	170	110	<0.50	<2.0	0.88	<2.0	0.05	0.14	40	
	1-Jan-09																			
	1-Jan-10																			
	6-Jun-11	440	800	**8.8**	5.1	22	120	5	2.6	62	140	110	<0.20	<1.0	0.84	<1.0	<0.05	**0.52**	28	
	1-Jan-12																			
	20-Feb-13	420	760	**9.3**	4	19	120	4.8	8	63	130	110	<0.20	1.1	0.83	<1.0	<0.05	**0.68**	26	
	1-Jan-14																			
MW-5A	15-Jan-01																			
	1-May-01																			
	15-Jul-01																			
	3-Oct-01																			
	15-Jan-02																			
	15-Apr-02																			
	15-Jul-02																			
	15-Oct-02																			
	15-Jan-03																			
	15-Apr-03																			
	15-Jul-03																			
	15-Oct-03	**840**	**1250**	8.0	66	30	150	3.9	0.995	147	**350**	140	<0.50	4.9	1.2	<1.0	0.1	**0.9**	**230**	<2.00
	15-Jan-04	**830**	**1260**	8.0	66	34	160	4.5	0.936	144	**300**	120	<0.10	5.4	1.3	5.7	0.11	**0.79**	**170**	<2.04
	19-Apr-04	**840**	**1260**	8.0	65	33	160	4.3	0.936	298	**320**	140	<0.20	4.9	1.3	<1.0	0.11	**1.2**	**200**	<3.00
	20-Jul-04	**820**	**1230**	8.0	65	32	160	4.2	0.923	142	**310**	130	<0.20	3.9	1.2	1.7	0.1	**1.1**	**200**	<3.00
	18-Oct-04	**830**	**1190**	**8.1**	65	31	150	4.1	1.19	145	**330**	140	<0.50	4	1.3	1.9	<0.1	**0.78**	**190**	<3.00
	25-Jan-05	**820**	**1220**	**8.1**	65	33	160	4.5	1.19	145	**320**	130	<0.40	4.9	1.2	<1.0	0.1	**0.89**	**180**	<3.00
	19-Apr-05	**830**	**1250**	**8.3**	65	32	150	4.4	1.89	146	**320**	130	<0.50	3.8	1.2	1.8	0.11	**0.93**	**170**	<3.00
	24-Aug-05	**770**	**1180**	**8.4**	63	32	170	4.3	2.22	136	**290**	130	<0.50	4	1.2	<1.0	0.11	**0.5**	**140**	<3.00
	12-Oct-05	**750**	**910**	**8.8**	37	28	150	3.8	4.22	103	**280**	130	<0.50	5.4	1.1	1.1	0.1	**0.48**	**51**	<3.00
	12-Jan-06	**808**	**1240**	**8.1**	60	32	150	4.1	<2.0	140	**300**	120	0.91	6.5	1.2	3.8	0.11	**0.89**	**160**	<300
	1-Jul-06																			
	1-Jan-07																			
	1-Jul-07	**678**	**1100**	**8.9**	33	26	170	4	4.7	92	**270**	130	<0.50	9.2		<1.0	<0.10	**0.49**	33	
	1-Jan-08																			
	1-Jul-08	326	**1150**	**8.3**	49	24	160	3.8	<2.0	125	**290**	130	<0.50	11	1.1	<2.0	0.09	**0.76**	**140**	
	1-Jan-09																			
	1-Jan-10																			
	7-Jun-11	**700**	**1100**	**8.5**	33	22	170	3.9	2	92	**260**	130	<0.25	7.9	1	<1.0	0.082	**1.8**	32	
	1-Jan-12																			
	13-Feb-13	**610**	**1100**	**8.7**	19	18	160	3.3	2.3	71	240	140	<0.25	7.8	0.98	<1.0	0.062	**1**	20	
	1-Jan-14																			

Bolded values are at or exceed the maximum contaminant level (MCL) for specified parameter.

CITY OF TRACY
GROUNDWATER QUALITY

WELL NAME	DATE SAMPLED	TDS (mg/L)	EC (uhmos/cm)	pH	Ca (mg/L)	Mg (mg/L)	Na (mg/L)	K (mg/L)	CO3 (mg/L)	HCO3 (mg/L)	SO4 (mg/L)	Cl (mg/L)	NO3 as N (mg/L)	As (ug/L)	B mg/L	Total Cr (ug/L)	F mg/L	Fe (mg/L)	Mn (ug/L)	Alpha Gross (pico curies/liter)
MCLs		500*	900*	6-8							250*	250*	10	50		50	2	0.3	50	100
MW-5B	15-Jan-01																			
	1-May-01																			
	15-Jul-01																			
	3-Oct-01																			
	15-Jan-02																			
	15-Apr-02																			
	15-Jul-02																			
	15-Oct-02																			
	15-Jan-03																			
	15-Apr-03																			
	15-Jul-03																			
	15-Oct-03	**690**	**1080**	7.9	56	26	140	4.3	0.81	157	**270**	100	1.70	1.1	1.1	2.2	0.08	**1.1**	**70**	<2.00
	15-Jan-04	**680**	**1080**	7.8	54	25	140	4.3	0.627	153	250	98	1.80	1.7	1.1	6.3	0.09	**0.38**	**57**	<2.00
	19-Apr-04	**650**	**1040**	**8.4**	44	25	140	4.3	2.33	143	250	100	0.48	1.5	1.1	1.7	0.09	0.096	25	<3.00
	20-Jul-04	**680**	**1040**	8.0	51	24	140	4.2	0.949	146	250	100	1.30	<2.0	1.1	2.2	<0.1	**0.31**	38	<3.00
	18-Oct-04	**680**	**1030**	8.0	53	25	140	4.5	0.981	151	**260**	100	2.10	<2.0	1.1	<1.0	<0.1	**0.62**	45	<3.00
	25-Jan-05	**670**	**1040**	8.0	53	24	140	4.4	0.975	150	250	100	2.00	1.2	1	3.7	0.086	**0.31**	42	<3.00
	19-Apr-05	**660**	**1050**	**8.1**	52	24	130	4.3	1.23	150	240	100	2.12	<2.0	1.1	5.1	<0.1	**0.69**	**59**	<3.00
	24-Aug-05	**680**	**1050**	8.0	53	25	140	4.2	<2.0	155	240	100	1.60	<2.0	1	<1.0	<0.1	<0.1	31	<3.00
	12-Oct-05	**670**	856	8.0	50	23	130	4	<2.0	153	250	100	1.80	<2.0	1	2.1	<0.1	0.16	35	<3.00
	12-Jan-06	**668**	**998**	7.9	53	24	130	4.1	<2.0	160	230	96	1.80	1.2	1	3.5	0.089	0.039	35	<3.00
	1-Jul-06																			
	1-Jan-07																			
	1-Jul-07	**682**	**1070**	**8.1**	53	25	140	4.2	<2.0	160	250	110	1.60	1		<1.0	<0.10	0.033	25	
	1-Jan-08																			
	1-Jul-08	**674**	**1070**	7.8	54	25	140	4.3	<2.0	167	250	110	2.00	1	1.1	<1.0	0.09	<0.020	28	
	1-Jan-09																			
	1-Jan-10																			
	7-Jun-11	**740**	**1100**	**8.1**	54	25	140	4.3	<2.0	150	**260**	110	2.10	<1.0	1.1	<1.0	0.093	**1.2**	24	
	1-Jan-12																			
	13-Feb-13	**640**	**1100**	**8.3**	46	24	140	4.2	<2.0	140	250	100	0.37	2.9	1.1	<2.0	0.076	0.24	37	
	1-Jan-14																			
MW-5C	15-Jan-01																			
	1-May-01																			
	15-Jul-01																			
	3-Oct-01																			
	15-Jan-02																			
	15-Apr-02																			
	15-Jul-02																			
	15-Oct-02																			
	15-Jan-03																			
	15-Apr-03																			
	15-Jul-03																			
	15-Oct-03	**1090**	**1980**	8.0	58	26	300	5.6	0.64	98.5	120	**540**	<0.50	<1.0	1.2	<1.0	0.07	**2.8**	**120**	<2.77
	15-Jan-04	**1000**	**1990**	7.9	57	25	310	5.7	0.504	97.7	120	**480**	<0.50	<1.0	1.2	2	0.07	**1.9**	**97**	<2.92
	19-Apr-04	**1080**	**1970**	7.8	56	25	300	5.5	0.392	95.5	120	**530**	<0.20	<1.0	1.3	<1.0	0.08	**3.5**	**130**	<3.00
	20-Jul-04	**1100**	**1930**	7.8	56	24	300	5.2	0.385	93.9	110	**530**	<0.20	<2.0	1.2	1.4	<0.1	**1.4**	**98**	<3.00
	18-Oct-04	**1110**	**1920**	8.0	55	24	290	5.3	0.624		100	**500**	<0.50	<2.0	1.2	<1.0	<0.1	**2.5**	**71**	<3.00
	25-Jan-05	**1100**	**1900**	**8.1**	53	24	300	5.8	0.766	93.6	110	**500**	<0.50	2	1.1	<1.0	0.076	**0.98**	**77**	<3.00
	19-Apr-05	**1080**	**1940**	**8.1**	52	24	290	5.6	0.753	92	110	**510**	<0.50	3.4	1.1	2.8	<0.1	**1.4**	**79**	<3.00
	24-Aug-05	**1080**	**1950**	7.8	53	25	310	5.3	<2.0	93	120	**490**	<0.50	2.2	1.2	<1.0	<0.1	**0.62**	39	<3.00
	12-Oct-05	**1070**	**1570**	8.0	49	23	290	5	<2.0	91.3	120	**515**	<0.50	<2.0	1.1	1.3	<0.1	**1.5**	**54**	<3.00
	12-Jan-06	**1020**	**960**	**8.1**	47	25	300	5.4	<2.0	85	110	**450**	<0.50	<0.20	1.2	2.2	0.071	**0.66**	46	<3.00
	1-Jul-06																			
	1-Jan-07																			
	1-Jul-07	**992**	**1850**	**8.8**	29	24	320	5.4	2.7	66	95	**500**	<0.12	<1.0		<1.0	<0.10	**1.1**	30	
	1-Jan-08																			
	1-Jul-08	**938**	**1760**	**9.0**	19	19	310	5.3	3.4	51.8	86	**500**	<0.50	<2.0	1.2	<2.0	0.08	**0.5**	16	
	1-Jan-09																			
	1-Jan-10																			
	7-Jun-11	**940**	**1700**	**9.2**	11	14	300	5.7	4.7	41	58	**480**	<0.25	<1.0	1.1	<1.0	0.086	**1.7**	11	
	1-Jan-12																			
	13-Feb-13	**880**	**1800**	**9.1**	11	12	310	5.3	3.3	37	52	**470**	<0.25	1	1.1	<1.0	0.079	**1.2**	8.3	
	1-Jan-14																			

Bolded values are at or exceed the maximum contaminant level (MCL) for specified parameter.

CITY OF TRACY
GROUNDWATER QUALITY

WELL NAME	DATE SAMPLED	TDS (mg/L)	EC (uhmos/cm)	pH	Ca (mg/L)	Mg (mg/L)	Na (mg/L)	K (mg/L)	CO3 (mg/L)	HCO3 (mg/L)	SO4 (mg/L)	Cl (mg/L)	NO3 as N (mg/L)	As (ug/L)	B mg/L	Total Cr (ug/L)	F mg/L	Fe (mg/L)	Mn (ug/L)	Alpha Gross (pico curies/liter)
MCLs		500*	900*	6-8							250*	250*	10	50		50	2	0.3	50	100
MW-6A	15-Jan-01																			
	1-May-01																			
	15-Jul-01																			
	3-Oct-01																			
	15-Jan-02																			
	15-Apr-02																			
	15-Jul-02																			
	15-Oct-02																			
	15-Jan-03																			
	15-Apr-03																			
	15-Jul-03																			
	15-Oct-03																			
	15-Jan-04																			
	19-Apr-04	**660**	**1050**	7.7	35	33	130	4.9	0.21	64.6	**280**	130	<0.2	<1.0	1.1	<1.0	0.08	**2.40**	**180**	4.1
	20-Jul-04	**600**	**973**	8.0	25	33	140	4.8	0.385	59.3	250	130	<0.2	<2.0	1.0	<1.0	<0.1	**0.63**	**100**	<3.00
	20-Oct-04	**600**	**934**	7.5	20	32	140	4.9	0.134	65.4	220	120	<0.5	<2.0	1.0	<1.0	<0.1	**0.60**	**83**	<3.00
	25-Jan-05	**560**	**956**	**8.3**	16	31	120	4.5	0.892	68.8	230	120	0.30	<1.0	0.92	<1.0	0.067	**1.4**	**92**	<3.00
	19-Apr-05	**570**	**958**	**8.1**	16	32	140	5.2	0.528	64.5	230	130	<0.5	<2.0	0.97	2	<0.1	**1.50**	**85**	<3.00
	24-Aug-05	**540**	**932**	**8.2**	12	31	130	4.7	<2.0	66.9	210	120	<0.5	<2.0	0.97	<1.0	<0.1	**0.59**	**52**	<3.00
	12-Oct-05	**580**	766	**8.7**	11	29	130	4.5	2.18	66.8	210	120	<0.5	<2.0	0.99	<1.0	<0.1	**0.54**	**49**	<3.00
	15-Jan-06	**540**	**974**	**8.2**	7.6	18	140	3.9	<2.0	70	200	120	<0.5	<1.0	0.89	<1.0	0.057	**0.28**	**16**	<3.00
	1-Jul-06																			
	1-Jan-07																			
	1-Jul-07	**500**	892	**9.2**	6.3	27	130	4.8	7.9	77	180	130	<0.50	<1.0		<1.0	<1.0	**0.54**	22	
	1-Jan-08																			
	1-Jul-08	484	872	**9.1**	5.3	25	130	4.7	6.6	80.9	34	120	<0.50	<1.0	1.1	<1.0	0.07	**0.58**	25	
	1-Jan-09																			
	1-Jan-10																			
	7-Jun-11	470	810	**8.1**	3.6	17	130	4.5	<2.0	90	120	120	<0.2	<1.0	0.96	<1.0	0.065	**1.6**	25	
	1-Jan-01																			
	13-Feb-13	420	800	**9.2**	3.2	15	130	4.5	9.0	89	110	120	<0.25	<1.0	1	<1.0	0.054	0.29	17	
	1-Jan-14																			
MW-6B	15-Jan-01																			
	1-May-01																			
	15-Jul-01																			
	3-Oct-01																			
	15-Jan-02																			
	15-Apr-02																			
	15-Jul-02																			
	15-Oct-02																			
	15-Jan-03																			
	15-Apr-03																			
	15-Jul-03																			
	15-Oct-03																			
	15-Jan-04																			
	19-Apr-04	**620**	**1050**	**8.3**	32	22	150	4.1	0.736	56.8	**260**	140	<0.20	<1.0	1.1	<1.0	0.11	**1.6**	**170**	<3.00
	20-Jul-04	**600**	**998**	**8.7**	25	22	150	4	1.47	45.1	250	130	<0.20	<2.0	0.98	<1.0	<0.1	**0.84**	**100**	<3.00
	20-Oct-04	**550**	**895**	**9.0**	15	21	150	4	3.27	50.3	200	120	<0.5	<2.0	0.99	1	<0.1	0.27	20	<3.00
	25-Jan-05	**530**	**913**	**9.3**	11	20	130	3.9	6.52	50.3	210	130	<0.30	<1.0	0.85	<1.0	0.08	**0.36**	26	<3.00
	19-Apr-05	**530**	778	**9.1**	11	20	150	4.1	4.23	51.7	200	130	<0.5	<2.0	0.93	1.3	<0.1	**0.36**	29	<3.00
	24-Aug-05	**520**	897	**9.2**	9.2	19	150	3.9	5.21	50.6	190	120	<0.5	<2.0	0.91	<1.0	<0.1	**0.61**	<20	<3.00
	12-Oct-05	**550**	750	**9.4**	8.4	18	140	3.6	8.18	50.1	190	130	<0.5	<2.0	0.9	1.3	<0.1	**0.36**	<20	<3.00
	15-Jan-06	**504**	936	**9.3**	34	24	110	3.3	7.2	53	180	130	<0.5	<1.0	1.5	3.2	0.067	**1.6**	50	<3.00
	1-Jul-06																			
	1-Jan-07																			
	1-Jul-07	478	875	**9.5**	5.3	16	160	4.1	12	58	170	130	<0.50	<1.0		<1.0	<0.10	0.28	12	
	1-Jan-08																			
	1-Jul-08	472	860	**9.5**	4.8	14	150	4.1	12	59.3	34	130	<0.50	<2.0	0.97	<2.0	0.07	0.15	11	
	1-Jan-09																			
	1-Jan-10																			
	7-Jun-11	500	860	**9.3**	3.8	10	150	4	8.3	64	160	120	<0.20	<1.0	0.94	<1.0	0.069	**0.5**	9.9	
	1-Jan-12																			
	1-Jan-13																			
	1-Jan-14																			

Bolded values are at or exceed the maximum contaminant level (MCL) for specified parameter.

CITY OF TRACY
GROUNDWATER QUALITY

WELL NAME	DATE SAMPLED	TDS (mg/L)	EC (uhmos/cm)	pH	Ca (mg/L)	Mg (mg/L)	Na (mg/L)	K (mg/L)	CO3 (mg/L)	HCO3 (mg/L)	SO4 (mg/L)	Cl (mg/L)	NO3 as N (mg/L)	As (ug/L)	B mg/L	Total Cr (ug/L)	F mg/L	Fe (mg/L)	Mn (ug/L)	Alpha Gross (pico curies/liter)
	MCLs	500*	900*	6-8							250*	250*	10	50		50	2	0.3	50	100
MW-6C	15-Jan-01																			
	1-May-01																			
	15-Jul-01																			
	3-Oct-01																			
	15-Jan-02																			
	15-Apr-02																			
	15-Jul-02																			
	15-Oct-02																			
	15-Jan-03																			
	15-Apr-03																			
	15-Jul-03																			
	15-Oct-03																			
	15-Jan-04																			
	19-Apr-04	**610**	**1060**	**8.2**	16	10	190	3.7	0.715	69.4	170	180	<0.20	<1.0	1.1	<1.0	0.08	**0.99**	27	<3.00
	20-Jul-04	**550**	**994**	**9**	7.3	9.3	180	3.6	4.45	68.5	150	180	<0.20	<2.0	1.1	<1.0	<0.1	0.17	<20.0	<3.00
	20-Oct-04	**530**	**921**	**8.8**	6.2	9.5	190	3.7	3.46	84.5	120	160	<0.5	<2.0	1.1	<1.0	<0.1	**0.51**	<20.0	<3.00
	25-Jan-05	**520**	**906**	**9.2**	4.8	8.3	160	3.5	9.64	93.6	120	150	<2.0	<1.0	1	<1.0	0.078	**0.46**	9.2	<3.00
	19-Apr-05	500	782	**9**	4	7.7	170	3.4	6.3	97.6	110	160	<0.5	<2.0	1.1	<0.5	<0.1	**1.1**	<20.0	<3.00
	24-Aug-05	480	874	**9.2**	3.3	7.2	170	3.3	10.3	100	98	150	<0.5	<2.0	1.1	<1.0	<0.1	**0.55**	<20.0	<3.00
	12-Oct-05	490	752	**9.4**	3.1	6.6	160	3	16.5	101	98	150	<0.5	<2.0	1.1	<1.0	<0.1	0.26	<20.0	<3.00
	15-Jan-06	500	**918**	**9.4**	2.9	6.4	160	3.1	17	110	95	150	<0.5	<1.0	1.1	1.1	0.068	0.25	6.4	<3.00
	1-Jul-06																			
	1-Jan-07																			
	1-Jul-07	458	862	**9.5**	2.2	4.5	180	3.5	27	130	73	150	<0.50	<1.0		<1.0	<0.10	**0.35**	6.6	
	1-Jan-08																			
	1-Jul-08	468	864	**9.5**	1.9	3.5	170	3.3	27	129	14	150	<0.50	<1.0	1.2	1.1	0.09	0.16	4.1	
	1-Jan-09																			
	1-Jan-10																			
	7-Jun-11	500	890	**9.5**	1.3	1.3	160	3.3	30	130	66	150	<0.20	1	1	<1.0	0.079	0.22	3.2	
	1-Jan-12																			
	13-Feb-13	490	**910**	**9.7**	1.1	0.7	190	3.6	44	130	56	150	<0.25	1.2	1.1	<1.0	0.067	0.28	5.4	
	1-Jan-14																			

Bolded values are at or exceed the maximum contaminant level (MCL) for specified parameter.

APPENDIX I
Drinking Water Source Assessment

Drinking Water Source Assessment

Water System

Schulte Road Warehouse Public Water System

San Joaquin County

Water Source

2020-14800 Well #3

Assessment Date

December, 2020

California Department of Health Services
Northern California Drinking Water Field Operations Branch
DHS Stockton, District 10

District No.	_____
System No.	_____
Source No.	_____
PS Code	_____

Checklist for Drinking Water Source Assessment - Ground Water Source

District Name _____ District No. _____ County **San Joaquin County**
System Name _____ System No. _____
Source Name _____ Source No. _____ PS Code: _____

Completed by _____ Date _____

The following information should be contained in the drinking water source assessment submittal.

- ☑ Cover Page
- ☑ Checklist *(this form)*
- ☑ Assessment Summary
- ☑ Vulnerability Summary
- ☐ Source Location Form *(not currently available, contact DHS for information)*
- ☑ Delineation of groundwater protection zones
- ☑ Source Data Sheet (select appropriate form)
  - ☑ Well Data Sheet
  - ☐ Spring Data Sheet
  - ☐ Horizontal Well Data Sheet
- ☑ Physical Barrier Effectiveness Checklist
- ☑ Possible Contaminating Activities (PCA) inventory form
- ☑ Vulnerability Ranking
- ☑ Assessment map with source location and protection zone
- ☑ Additional maps (optional) (e.g. local maps of zones and PCAs, recharge area maps, or maps indicating direction of ground water flow)
- ☑ Means of Public Availability of Report (indicate those that will be used)
  - ☑ Notice in the Consumer Confidence Report* (minimum)
  - ☑ Copy in regulatory agency (DHS or LPA) office (minimum)
  - ☑ Copy in public water system office (recommended)
  - ☐ Copy in public library/libraries
  - ☐ Internet (indicate Internet address: _____)
  - ☐ Other (describe)

*The CCR should indicate where customers can review the assessments.

Drinking Water Source Assessment and Protection (DWSAP) Program

Assessment Summary

District Name _____ District No. _____ County **San Joaquin County**
System Name _____ System No. _____
Source Name _____ Source No. _____ PS Code: _____

Completed by _____ Date _____

Description of System and Source

The Schulte Road Warehouse Public Water System is located in San Joaquin County and serves the populations at 14900 and (eventually) 14800 Schulte Road, Tracy, CA 95377.[1] The parcels are Book 209, Page 24, Parcels 040 and (eventually) 023, respectively, and the general land use is I-G (industrial), though there is adjacent agricultural zoning. There is one service connection from the existing primary supply well (Well #1, located on the southwest edge of parcel 040) at 15000 W. Schulte, which supplies water for the employees at the warehouse. However, recent construction has seen a new well and service connection installed at 14900 location (parcel 040). The property at 14800 West Schulte (parcel 023) was recently acquired and will eventually see another groundwater source and service connection in this area of study.

The drinking water source for the water system is groundwater, which is drawn from the Tracy Subbasin of the San Joaquin Valley Basin (number 5-022.15). Groundwater recharge for the San Joaquin Basin is primarily from agricultural irrigation, precipitation, and lateral movement of surface water drainage courses. Attachments have been included to show regional water recharge areas. Groundwater, at the depth of the well screens (intermediate to the Corcoran Clay layer and deeper, high saline aquifer) is described in the 2011 City of Tracy Urban Water Management Plan as flowing from the east to the west towards the pumping trough at the southern portion of the City. This conforms with the groundwater contours shown in (link below), and means that the localized flow is from north to south due to the site's location. Review of local CASGEM water elevation, and triangulating flow against the water elevation inferred from the driller's log for the 2017-1499 East Well (see attachments), conforms to these findings as well.

Comments:

Contents of this Assessment

Yes	☑	**No**	☐	**Assesment Summary**
Yes	☑	**No**	☐	**Vulnerability Summary**
Yes	☐	**No**	☑	**Source Location Form**
Yes	☑	**No**	☐	**Delineation of Protection Zones**
Yes	☑	**No**	☐	**Physical Barrier Effectiveness Checklist**
Yes	☑	**No**	☐	**Source Data Sheet**
Yes	☑	**No**	☐	**Inventory of Possible Contaminating Activities**
Yes	☑	**No**	☐	**Vulnerability Ranking**
Yes	☑	**No**	☐	**Assessment Map**

Assessment Procedures

The assessment of the source was conducted as a joint effort between the San Joaquin County Environmental Health Department, the Schulte Road Public Water System, and Quality Service, INC.

The following sources of information were used in the assessment: water system files, DHS files, County Records, EDR Radius Search with GeoCheck, LightBox, Google Earth, GeoTracker, CASGEM Online System, SDWIS, DWR Well Completion Report Map Application, Groundwater Report by SJC Flood Control and Water Conservation District (dated Spring 2016 [http://www.sjwater.org/Documents/Groundwater%20Reports/Groundwater%20Report-Spring%202016.pdf]), DWR Water Management Planning Tool, 2011 City of Tracy Urban Water Management Plan, Well Completion Report #e0358693 (dated 10/23/2017), Partial Architectural Drawing (dated 04/10/2018), and Well Test Report by Millie Severson, Inc. (dated 12/06/2017). Procedures used to conduct the assessment include: file review, drafting and measurements with DraftSight, calculations, discussions with water system, and use of GIS.

Drinking Water Source Assessment and Protection (DWSAP) Program

Vulnerability Summary

District Name _____ District No. _____ County San Joaquin
System Name _____ System No. _____
Source Name _____ Source No. _____ PS Code: _____

Completed by _____ Date _____

THE FOLLOWING INFORMATION MUST BE INCLUDED IN THE SYSTEM CONSUMER CONFIDENCE REPORT

A source water assessment was conducted for Wells #1 and #2 Schulte Road Public Water System in February, 2019. A source water assessment was conducted for Well #3 December, 2020.

The source is considered most vulnerable to the following activities associated with contaminants detected in the water supply:

Human activity may be linked to some contaminants that have historically been detected in the local groundwater supply (though at still safe levels). These activities include: nearby domestic and industrial wastewater storage/processing and chemical storage/processing.

The source is considered most vulnerable to the following activities not associated with any detected contaminants:

The primary groundwater sources for the Schulte Rd. Warehouse Public Water System may be vulnerable to human activities related to agriculture, namely pesticide/herbicide application and storage. It is possible that the sources could be vulnerable to past activities as related to historic gas stations, dumps, landfills, mining and/or contamination plumes. However, not enough information is available about these historic activities to comment decidedly about the sources' vulnerability to them.

Discussion of Vulnerability:

The vulnerability assessment of a groundwater source is a standardized evaluation of the activities that pose a risk of contaminating the water. This assessment takes into account how proximal the activity is, the relative degree of hazard it poses, how the source is constructed, and how effectively the specific lithology of the well prevents migration of contaminants.

As a consumer, you have a right to know what's going on with the quality and nature of the water you receive. You will be notified if the analytical monitoring program shows the water contains contaminants; this evaluation is not to say that the water supply for Shulte Road Warehouse system is unsafe, nor is it to say that the activities that have been identified will cause the source to be contaminated now or in the future. This assessment is used to inform the water system about potential hazards so that management practices may be employed or bolstered to protect the potable water supply. It also aids in selecting chemicals to monitor for, and it can help to resolve any issues that may end up arising.

Delineation of Ground Water Protection Zones

District Name _____ District No. _____ County **San Joaquin**
System Name _____ System No. _____
Source Name _____ Source No. _____ PS Code: _____

Completed by _____ Date _____

Indicate the method used to delineate the zones:

(For more information refer to the Drinking Water Source Assessment and Protection document)

☐ Calculated Fixed Radius (Default) (Show calculations below)

☑ Modified Calculated Fixed Radius (Show calculations below and attach documentation for direction of ground water flow)

☐ More detailed methods
Type used (i.e., analytical methods, hydrogeologic mapping, modeling):

☐ Arbitrary Fixed Radius (For use only by or with permission of DHS—use minimum distances shown below)

Calculated Fixed Radius Equation

The equation for the calculated fixed radius (R) is $R_t = \sqrt{Q\,t / \pi\,\eta\,H}$

R_t = R_2, R_5, or R_{10} corresponding to t (Calculate R for each travel time)
Q = maximum pumping capacity of well (ft^3/year = gpm * 70,267): **10,540,050 cuft/year**
t = time of travel (years), 2, 5 and 10 years
π = 3.1416
η = effective porosity (decimal percent) *(If unknown, assume 0.2)*: **Effective porosity is unknown**
H = screened interval of well (feet): **30 feet (between 320'-335' & 360' - 375')**
(If unknown, assume 10% of Q gpm, 10 ft min)

Specific methods follow on next page

Calculated Fixed Radius Delineation Method (Default)

Using the equation presented above, calculate the size of zones for the appropriate aquifer setting of the source.

Porous Media Aquifer

Zone A (2 year TOT) R_2 = 1057.5 ft, minimum = 600 ft —use larger: 1057.5 ft
Zone B5 (5 year TOT) R_5 = 1672.1 ft, minimum = 1,000 ft—use larger: 1672.1 ft
Zone B10 (10 year TOT) R_{10} = 2364.7 ft, minimum = 1,500 ft—use larger: 2364.7 ft

Fractured Rock Aquifer

(Increase size of zones by 50%)

Zone A (2 year TOT) $1.5R_2$ = _____ ft, minimum = 900 ft—use larger: _____ ft
Zone B5 (5 year TOT) $1.5R_5$ = _____ ft, minimum = 1,500 ft—use larger: _____ ft
Zone B10 (10 year TOT) $1.5R_{10}$ = _____ ft, minimum = 2,250 ft—use larger: _____ ft

Modified Calculated Fixed Radius Delineation Method

In porous media aquifers, if the direction of ground water flow is known (see Section 6.2.3), the default zone circle may be shifted upgradient by $0.5R_t$. The upgradient and downgradient limits of the zone are determined below.

Zone A (2-year TOT)

upgradient distance = $1.5R_2$ = 1586.3 ft, minimum = 900 ft, use larger: 1586.3 ft
downgradient distance = $0.5R_2$ = 528.8 ft, minimum = 300 ft, use larger: 528.8 ft

Zone B5 (5-year TOT)

upgradient distance = $1.5R_5$ = 2508.2 ft, minimum = 1,500 ft, use larger: 2508.2 ft
downgradient distance = $0.5R_5$ = 836.1 ft, minimum = 500 ft, use larger: 836.1 ft

Zone B10 (10-year TOT)

upgradient distance = $1.5R_{10}$ = 3547.1 ft, minimum = 2,250 ft, use larger: 3547.1 ft
downgradient distance = $0.5R_{10}$ = 1182.4 ft, minimum = 750 ft, use larger: 1182.4 ft

Physical Barrier Effectiveness Checklist - Ground Water Source

District Name _____ District No. _____ County **San Joaquin**
System Name _____ System No. _____
Source Name _____ Source No. _____ PS Code: _____

Completed by _____ Date _____

Use the DHS Well Data Sheet (separate document) to complete the following form.

Directions:

1. Read through the form and collect the information needed to complete the form. (Hydrogeology, Soils, Presence of abandoned or improperly destroyed wells, Well construction and operation.)

2. Determine Parameter A, Type of Aquifer.
   - If the aquifer is confined, use the right-hand column, and evaluate only the parameters indicated for confined aquifers.
   - If the aquifer is unconfined, semi-confined, or the degree of confinement is unknown, or if the aquifer is fractured rock, use the left-hand column and evaluate only the parameters for unconfined aquifers.

3. For each parameter appropriate for the source, place a check in the box for the answer that most closely applies to that source. If more than one answer is possible, select the more conservative (i.e. lower points) answer. *[For example, if the depth to static water (Parameter D) has varied between 45 and 55 feet, choose answer 2 (20 to 50 feet).]*

4. Add the points in the column appropriate for the source and interpret the score as shown on the bottom of the last page.
   - Determine whether the source has a High, Moderate or Low Physical Barrier Effectiveness. Use this in the Vulnerability analysis. The higher the points, generally the more effective the source and site are to retarding the movement of contaminants to the water supply.

NOTE: If the source is located in fractured rock the source is considered to have a Low Physical Barrier Effectiveness, regardless of the point total. So, if Parameter B, Aquifer Material is 3, the remainder of the form does not need to be completed.

Physical Barrier Effectiveness (PBE) – Ground Water, page 1 of 2
Source Name: 2020-14800 Well #3 Source No.: #003

PARAMETER	*POINTS*			
	Unconfined		Confined	
A. TYPE OF AQUIFER Confinement *(up to **50** points maximum)* choose one				
a. Unconfined, Semi-confined, Fractured Rock, Unknown	0			
b. Confined			50	50
B. AQUIFER MATERIAL (Unconfined Aquifer) Type of materials within the aquifer *(up to **20** points maximum)* choose one				
1. Porous Media (Interbedded sands, silts, clays, gravels) with continuous clay layer minimum 25' thick above water table within Zone A	20			
2. Porous Media (Interbedded sands, silts, clays, and gravels)	10			
3. Fractured rock * (* Low Physical Barrier Effectiveness - no further questions required)	0			
C. PATHWAYS OF CONTAMINATION (All Aquifers) Presence of Abandoned or Improperly Destroyed Wells *(up to **10** points maximum)*				
1. Are they present within Zone A (2-year time of travel (TOT) distance)?				
a. Yes or unknown	0		0	0
b. No	5		5	
2. Are they present within Zone B5 (2- to 5-year TOT distance)?				
a. Yes or unknown	0		0	0
b. No	3		3	
3. Are they present within Zone B10 (5- to 10-year TOT distance)?				
a. Yes or unknown	0		0	0
b. No	2		2	
D. STATIC WATER CONDITIONS (Unconfined Aquifer) Depth to static Water (DTW) = 165 feet *(up to **10** points maximum)* choose one				
1. 0 to 20 feet	0			
2. 20 to 50 feet	2			
3. 50 to 100 feet	6			
4. > 100 feet	10			
E. WELL OPERATION (Unconfined Aquifer) Depth to Uppermost Perforations (DUP) DUP = 320 feet Maximum Pumping Rate of Well (Q) Q = 150 gallons/minute Length of screened interval (H) H = 30 feet [(DUP – DTW) / (Q/H)] = 31 *(up to **10** points maximum)* choose one				
1. < 5	0			
2. 5 to 10	5			
3. > 10	10			

Physical Barrier Effectiveness – Ground Water, page 2 of 2
Source Name: 2020-14800 Well #3 Source No. #003

PARAMETER	*POINTS* Unconfined		Confined	
F. HYDRAULIC HEAD (Confined Aquifer) What is the relationship in hydraulic head between the confined aquifer and the overlying unconfined aquifer? (i.e. does the well flow under artesian conditions?) *(up to **20** points maximum)* choose one				
1. head in confined aquifer is higher than head in unconfined aquifer under all conditions			20	
2. head in confined aquifer is higher than head in unconfined aquifer under static conditions			10	
3. head in confined aquifer is lower than or same as head in unconfined aquifer			0	0
4. unknown			0	
G. WELL CONSTRUCTION (All Aquifers) 1. Sanitary Seal (Annular Seal) Depth = 200 feet *(up to **10** points maximum)* choose one				
a. None or less than 20 feet deep	0		0	
b. 20 to 50 ft deep	6		10	
c. 50 ft or greater	10		10	10
2. Surface seal (concrete cap) *(up to **4** points maximum)* choose one				
a. Not present or improperly constructed	0		0	
b. Watertight, slopes away from well, at least 2' laterally in all directions	4		4	4
3. Flooding potential at well site *(up to **1** point maximum)* choose one				
a. Subject to localized flooding (i.e. in low area or unsealed pit or vault) or Within 100 year flood plain	0		0	
b. Not subject to flooding	1		1	1
4. Security at well site *(up to **5** points maximum)* choose one				
a. Not secure	0		0	
b. Secure (i.e. housing, fencing, etc.)	5		5	5
Maximum Points Possible	70		100	
POINT TOTAL FOR THIS SOURCE			**70**	

Physical Barrier Effectiveness SCORE INTERPRETATION

	Point Total		**Effectiveness**	
☐	**0 to 35**	=	**Low**	(includes all sources in Fractured Rock)
☐	**36 to 69**	=	**Moderate**	
☑	**70 to 100**	=	**High**	

Possible Contaminating Activities (PCA) Inventory Form - Ground Water

District Name **Northern FOB - Stockton** District No. **10** County **San Joaquin**
System Name **Schulte Warehouse Public Water System** System No. **CA3902181**
Source Name **2020-14800 East Well (#3** Source No. **#003** PS Code: **3902181-002**

Completed by **Glen Anderson, Schaaf & Wheeler** Date **12/08/2020**

Check the PCA tables that will be used for this drinking water source (assessment must include the "Other" checklist and at least one of the remaining three checklists):

- Commercial/Industrial ☑
- Residential/Municipal ☐
- Agricultural/Rural ☐
- Other (required for all) ☑

Proceed to appropriate checklist or checklists. Indicate whether the PCA is located in the zone by placing a Y (yes), N (no), or U (unknown) in the appropriate boxes.
Example:

Zone A	Zone B5	Zone B10
Y	N	N
N	Y	U
U	N	N

Risk Ranking of PCAs, where VH = Very High Risk, H = High Risk, M = Moderate Risk, L = Low Risk

PCA Checklist COMMERCIAL/INDUSTRIAL

PCA (Risk Ranking)	PCA in Zone A?	PCA in Zone B5?	PCA in Zone B10?	Comments
Automobile- Body shops (H)	N	N	N	
Automobile- Car washes (M)	N	N	N	
Automobile- Gas stations (VH)	N	N	N	
Automobile- Repair shops (H)	N	N	N	
Boat services/repair/ refinishing (H)	N	N	N	
Chemical/petroleum pipelines (H)	N	N	N	
Chemical/petroleum processing/storage (VH)	N	Y	Y	
Dry cleaners (VH)	N	N	N	
Electrical/electronic manufacturing (H)	N	N	N	
Fleet/truck/bus terminals (H)	N	N	N	
Furniture repair/ manufacturing (H)	N	N	N	
Home manufacturing (H)	N	N	N	
Junk/scrap/salvage yards (H)	N	N	N	
Machine shops (H)	N	N	N	
Metal plating/ finishing/fabricating (VH)	N	N	N	
Photo processing/printing (H)	N	N	N	
Plastics/synthetics producers (VH)	N	N	N	
Research laboratories (H)	N	N	N	
Wood preserving/treating (H)	U	U	U	
Wood/pulp/paper processing and mills (H)	U	U	U	
Lumber processing and manufacturing (H)	N	N	N	
Sewer collection systems (H, if in Zone A, otherwise L)	Y	N	Y	
Parking lots/malls (>50 spaces) (M)	N	N	N	
Cement/concrete plants (M)	N	N	N	
Food processing (M)	N	N	N	
Funeral services/graveyards (M)	N	N	N	
Hardware/lumber/parts stores (M)	N	N	N	
Appliance/Electronic Repair (L)	N	N	N	
Office buildings/complexes (L)	N	Y	Y	
Rental Yards (L)	N	N	N	
RV/mini storage (L)	N	N	N	

PCA Checklist OTHER ACTIVITIES

PCA (Risk Ranking)	PCA in Zone A?	PCA in Zone B5?	PCA in Zone B10?	Comments
NPDES/WDR permitted discharges (H)	Y	Y	Y	
Underground Injection of Commercial/Industrial Discharges (VH)	N	N	N	
Historic gas stations (VH)	U	U	U	
Historic waste dumps/ landfills (VH)	U	U	U	
Illegal activities/ unauthorized dumping (H)	N	N	N	
Injection wells/ dry wells/ sumps (VH)	N	N	N	
Known Contaminant Plumes (VH)	U	U	U	
Military installations (VH)	N	N	N	
Mining operations - Historic (VH)	U	U	U	
Mining operations - Active (VH)	N	N	N	
Mining - Sand/Gravel (H)	N	N	N	
Wells - Oil, Gas, Geothermal (H)	N	N	Y	
Salt Water Intrusion (H)	N	N	N	
Recreational area - surface water source (H)	N	N	N	
Underground storage tanks - Confirmed leaking tanks (VH)	N	N	N	
Underground storage tanks - Decommissioned - inactive tanks (L)	Y	N	N	
Underground storage tanks - Non-regulated tanks (tanks smaller than regulatory limit) (H)	N	N	N	
Underground storage tanks - Not yet upgraded or registered tanks (H)	N	N	N	
Underground storage tanks - Upgraded and/or registered - active tanks (L)	N	N	N	
Above ground storage tanks (M)	Y	Y	Y	
Wells - Water supply (M)	N	Y	Y	
Construction/demolition staging areas (M)	Y	Y	Y	
Contractor or government agency equipment storage yards (M)	N	N	N	
Dredging (M)	N	N	N	
Transportation corridors - Freeways/state highways (M)	N	N	N	
Transportation corridors - Railroads (M)	N	Y	Y	
Transportation corridors - Historic railroad right-of-ways (M)	U	U	U	
Transportation corridors - Road Right-of-ways (herbicide use areas) (M)	Y	Y	Y	
Transportation corridors - Roads/ Streets (L)	Y	Y	Y	
Hospitals (M)	N	N	N	
Storm Drain Discharge Points (M)	N	Y	Y	
Storm Water Detention Facilities (M)	N	Y	Y	

PCA Checklist OTHER ACTIVITIES (continued)

PCA (Risk Ranking)	PCA in Zone A?	PCA in Zone B5?	PCA in Zone B10?	Comments
Artificial Recharge Projects - Injection wells (potable water) (L)	N	N	N	
Artificial Recharge Projects - Injection wells (non-potable water) (M)	N	N	N	
Artificial Recharge Projects - Spreading Basins (potable water) (L)	N	N	N	
Artificial Recharge Projects - Spreading Basins (non-potable water) (M)	N	N	N	
Medical/dental offices/clinics (L)	N	N	N	
Veterinary offices/clinics (L)	N	N	N	
Surface water - streams/ lakes/rivers (L)	N	Y	Y	
Wells - monitoring, test holes (L)	N	Y	Y	

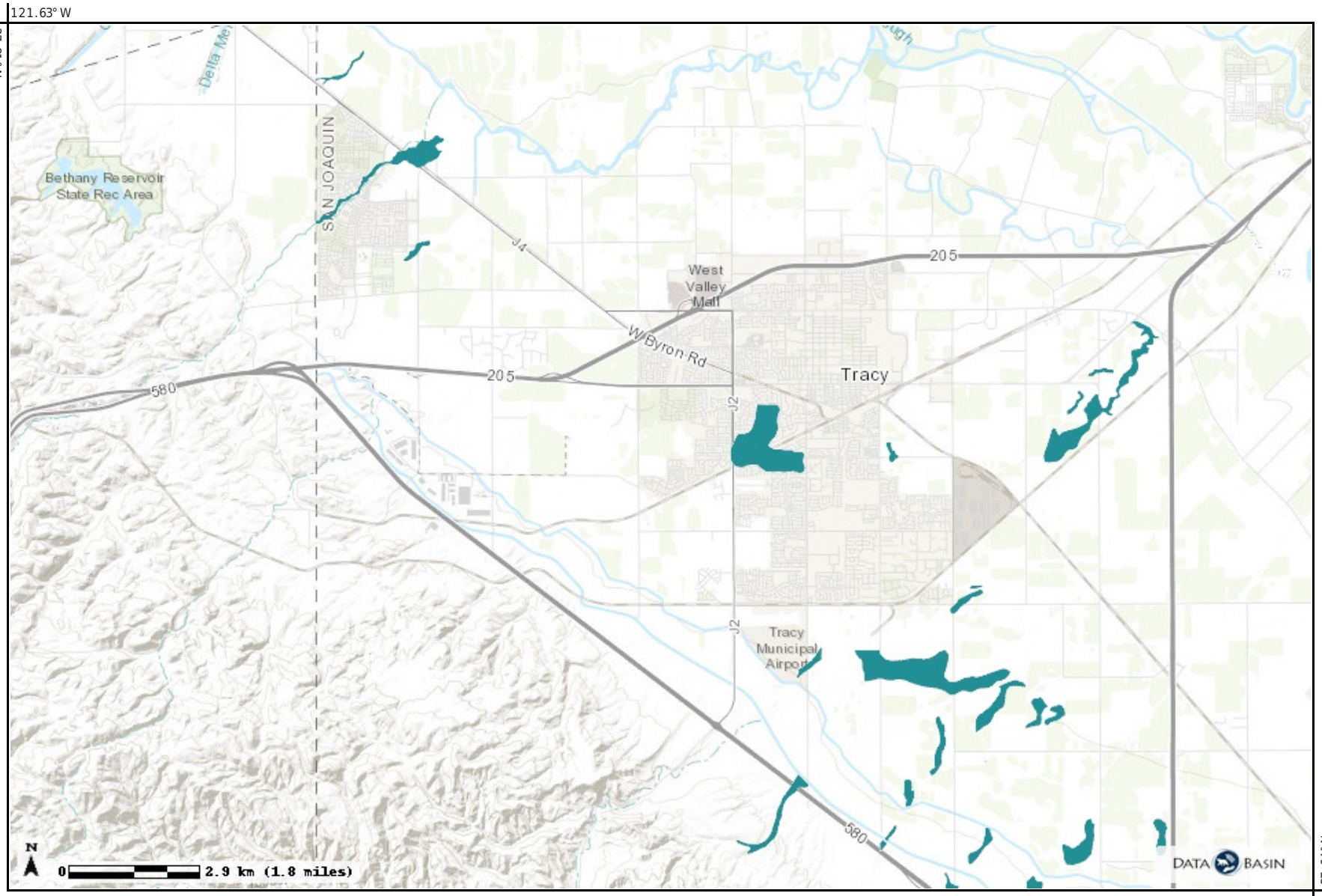

Legend

Groundwater Recharge Areas

Displaying: **GWRC_Cat**

- 1 - excessively-drained
- 2 - somewhat excessively-drained
- 3 - well-drained

14800 W Schulte Soil Map

Map Unit Symbol	Map Unit Name	Acres in AOI	Percent of AOI
118	Capay clay, 0 to 1 percent slopes, MLRA 17	44.7	100.0%
Totals for Area of Interest		**44.7**	**100.0%**

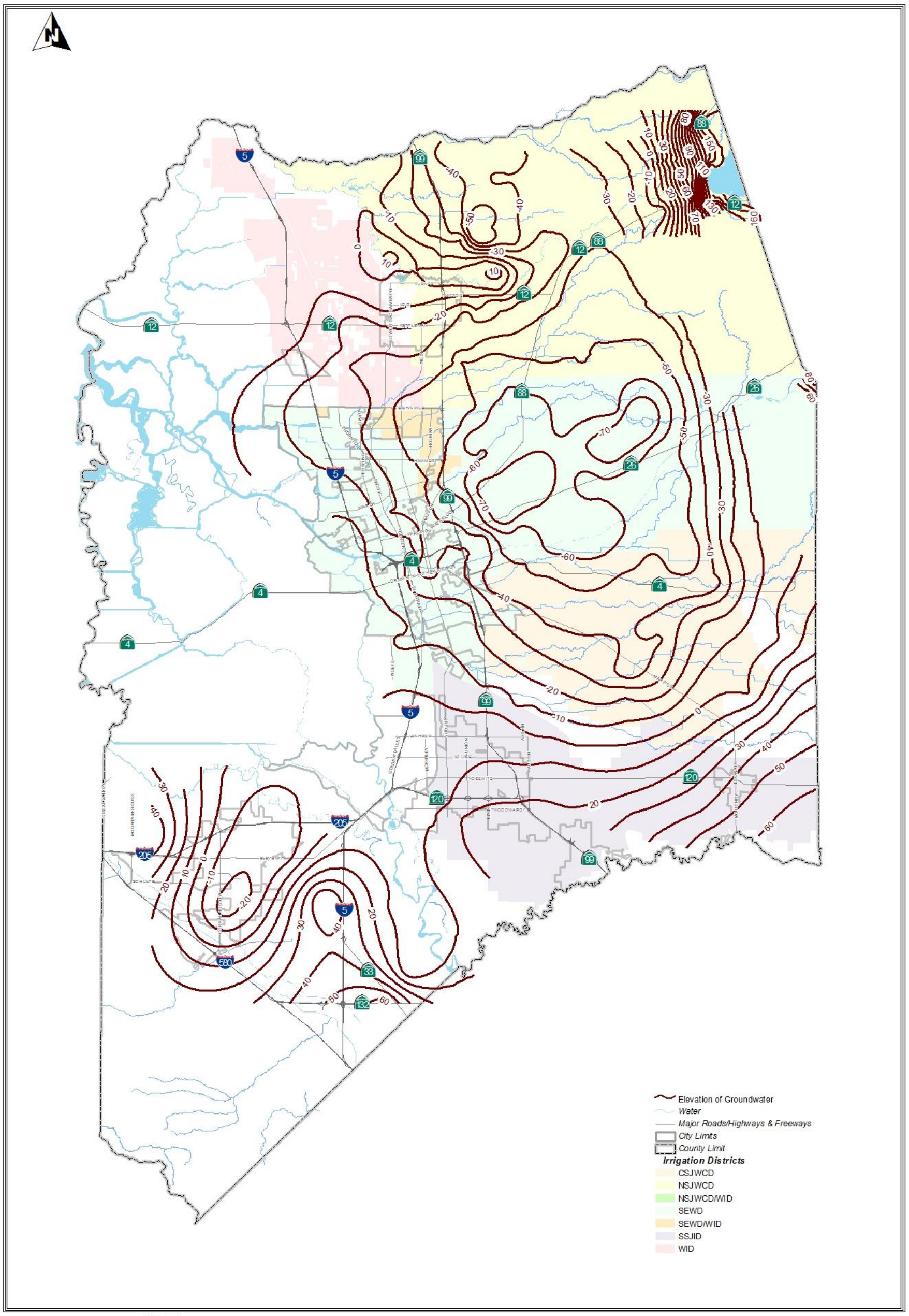

Figure 2-33 Lines of Equal Elevation of Groundwater Spring 2016

Groundwater Information Center Interactive Map Application

Water Levels | Boundaries

Clear all

Select Data Type:

- Depth
- Elevation
- Change

Select Layer Group:

Spring 2018 Elevation

Show Layers:

- Points
  - Groundwater Elevation Measurement
- Contours
- ColorRamp

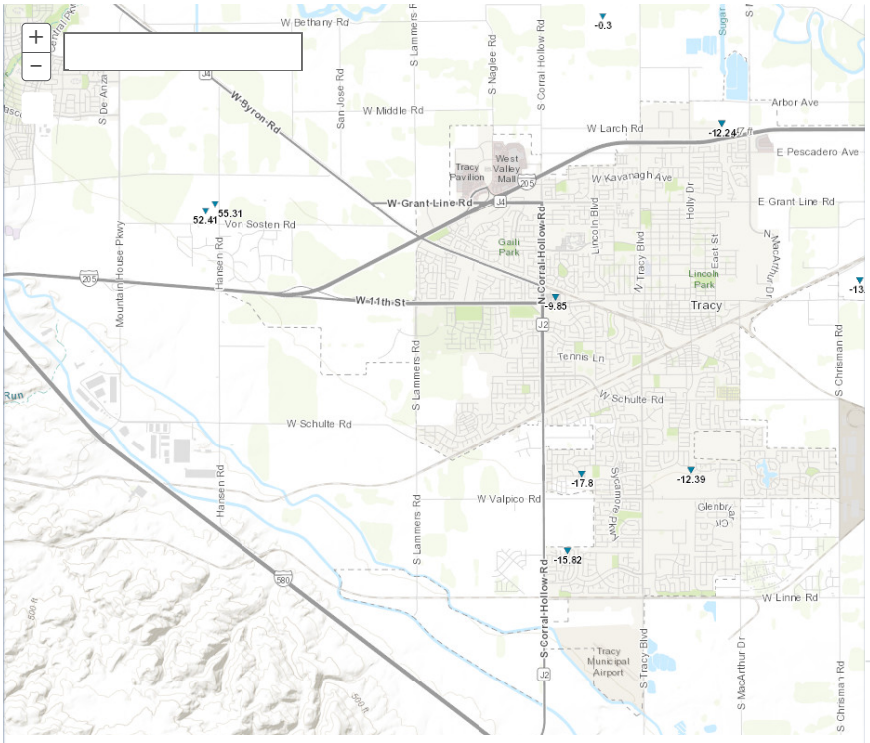

below the ground surface. Increasing values indicate increasing depth to groundwater (or deeper/lower water levels). Negative values indicate that the groundwater level is above ground surface.

Points show the depth to groundwater values collected from wells. The contours and color ramp layers provide a smoothed approximation of the groundwater level "surface" based on the measurement data. The measurement values may not exactly match the contour or color ramp values because of the surface and contour smoothing process.

Water level measurements are selected based on measurement date and well construction information (where available) and approximate groundwater levels in the unconfined to uppermost semi-confined aquifers.

Layer Attribute Explanation:
Site Code: Unique Well ID
Local Well Name: Well ID defined by local agency or well owner
State Well Number: DWR State Well Number
WCR Number: Well Completion Report number (DWR form 188)
Well Use: Intended use of well
Msmt Date: Date water level measurement was collected
Msmt Agency: Agency that collected the water level measurement
WSEL: Groundwater Surface Elevation (ft-msl), NAVD88
DGBS: Groundwater Depth Below Ground Surface – (ft), NAVD88

Download

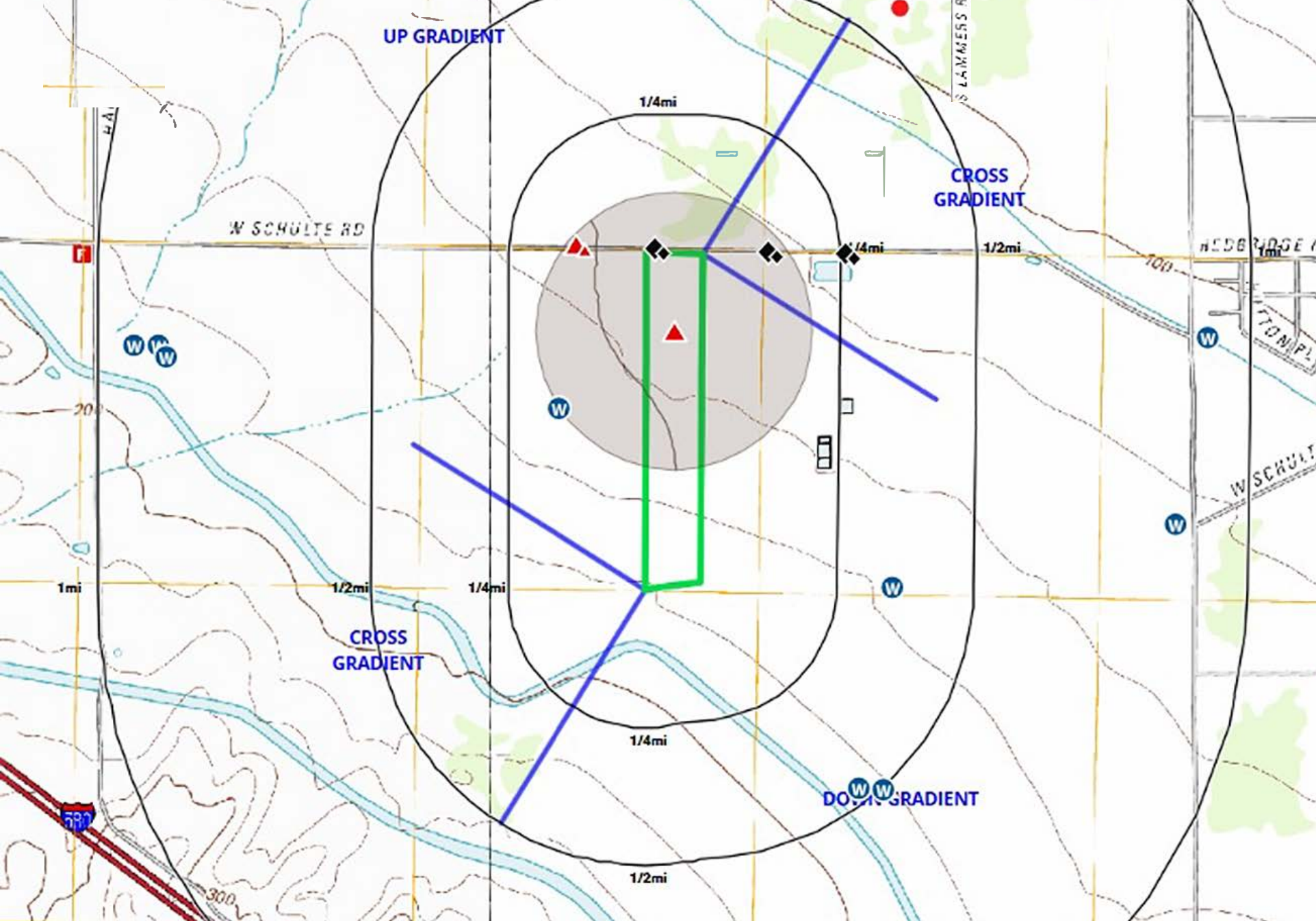
UP GRADIENT
1/4mi
CROSS
GRADIENT
W SCHULTE RD
1/4mi
1/2mi
1mi
1mi
1/2mi
1/4mi
CROSS
GRADIENT
1/4mi
DOWN GRADIENT
1/2mi

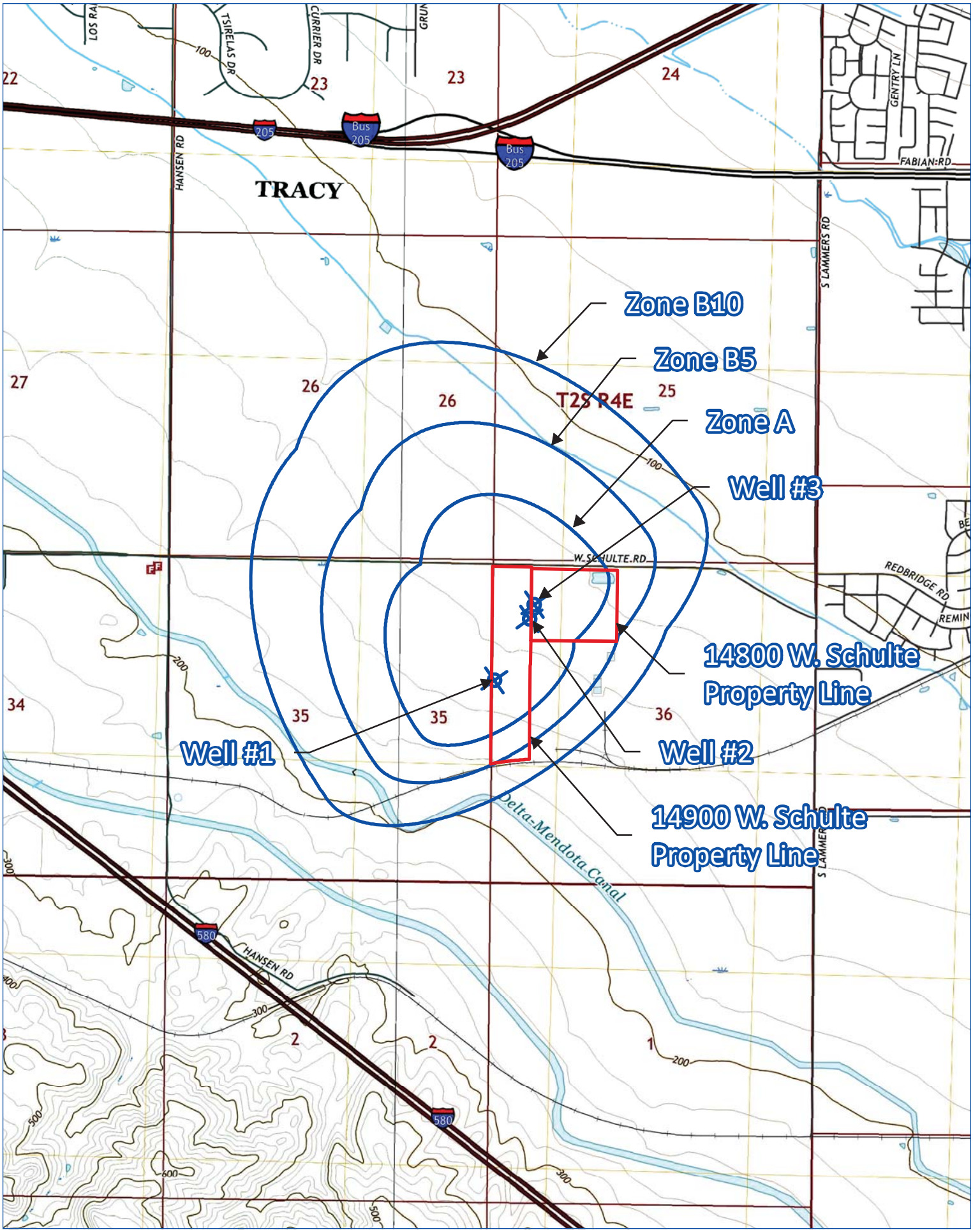

Schaaf & Wheeler
CONSULTING CIVIL ENGINEERS

FIGURE 1: **Combined Delimitation for System Wells**

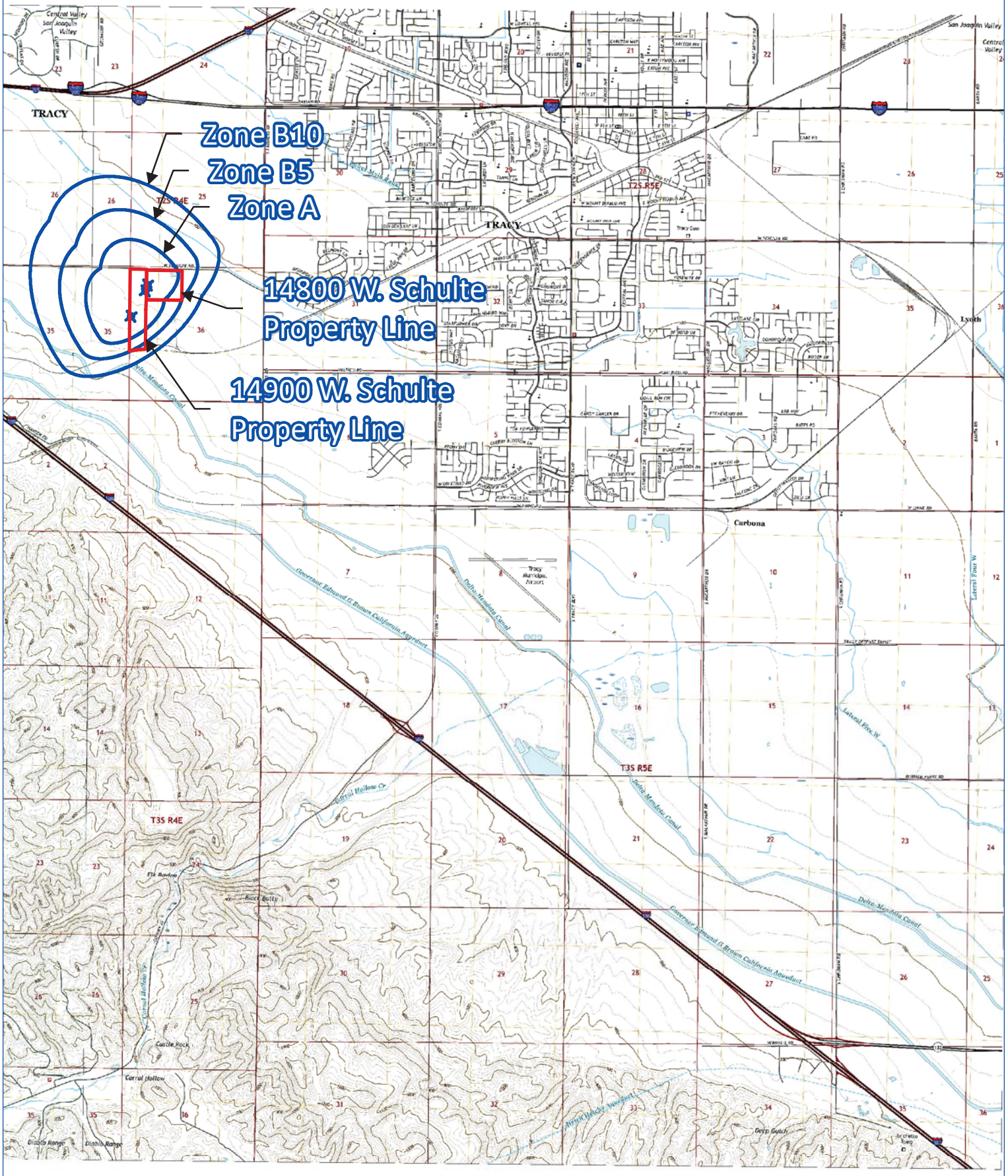

Schaaf & Wheeler
CONSULTING CIVIL ENGINEERS

0 2,500 5,000 Feet

FIGURE 2: **Combined Delimitation for System Wells**

VULNERABILITY RANKING MASTER LIST - Ground Water

District Name: Northern California FOB - Stockton | District No. 10 | County SJC

System Name: Schulte Road Warehouse Public Water System | System No. CA3902181

Source Name: 2020-14900 East Well (Well #2), Well #1, & | Source No. #3 | PS Code: 3902181-002

14800- Well #3 (Combined Radius)

Zone	PCA (Risk)	PCA Risk Points VH = 7 H = 5 M = 3 L = 1	Zone Points A = 5 B5 = 3 B10 = 1 Unknown = 0	PBE Points L = 5 M = 3 H = 1	Vulnerability Score Risk + Zone + PBE points
A	Sewer collection systems- Comm/Indus (H, if in Zone A, otherwise L)	5	5	1	11
A	Septic systems – low density (<1/acre) (H in Zone A, otherwise L)	5	5	1	11
A	Lagoons / liquid wastes (H)	5	5	1	11
A	Pesticide/fertilizer/ petroleum storage & transfer areas (H)	5	5	1	11
A	Agricultural Drainage (H in Zone A, otherwise M)	5	5	1	11
A	Wells - Agricultural/ Irrigation (H)	5	5	1	11
A	Crops, irrigated (M)	3	5	1	9
A	Fertilizer, Pesticide/ Herbicide Application (M)	3	5	1	9
A	NPDES/WDR permitted discharges (H)	5	5	1	11
A	USTs- Decommissioned - inactive tanks (L)	1	5	1	7
A	Above ground storage tanks (M)	3	5	1	9
A	Construction/demolition staging areas (M)	3	5	1	9
A	Transportation Corridors- Road Right-of-ways (herbicide use) (M)	3	5	1	9
A	Transportation Corridors- Roads/ Streets (L)	1	5	1	7
B5	Chemical/petroleum processing/storage (VH)	7	3	1	11
B5	Office buildings/complexes (L)	1	3	1	5
B5	Septic systems – low density (<1/acre) (H in Zone A, otherwise L)	1	3	1	5
B5	Lagoons / liquid wastes (H)	5	3	1	9
B5	Pesticide/fertilizer/ petroleum storage & transfer areas (H)	5	3	1	9
B5	Agricultural Drainage (H in Zone A, otherwise M)	3	3	1	7
B5	Wells - Agricultural/ Irrigation (H)	5	3	1	9
B5	Crops, irrigated (M)	3	3	1	7
B5	Fertilizer, Pesticide/ Herbicide Application (M)	3	3	1	7
B5	NPDES/WDR permitted discharges (H)	5	3	1	9
B5	Above ground storage tanks (M)	3	3	1	7
B5	Construction/demolition staging areas (M)	3	3	1	7
B5	Wells – Water supply (M)	3	3	1	7
B5	Transportation Corridors- Road Right-of-ways (herbicide use) (M)	3	3	1	7
B5	Transportation Corridors- Roads/ Streets (L)	1	3	1	5
B5	Storm Drain Discharge Points (M)	3	3	1	7
B5	Storm Water Detention Facilities (M)	3	3	1	7
B5	Surface water - streams/ lakes/rivers (L)	1	3	1	5
B5	Wells – monitoring, test holes (L)	1	3	1	5

B10	Chemical/petroleum processing/storage (VH)	7	1	1	9
B10	Sewer collection systems- Comm/Indus (H, if in Zone A, otherwise L)	1	1	1	3
B10	Office buildings/complexes (L)	1	1	1	3
B10	Septic systems – low density (<1/acre) (H in Zone A, otherwise L)	1	1	1	3
B10	Lagoons / liquid wastes (H)	5	1	1	7
B10	Agricultural Drainage (H in Zone A, otherwise M)	3	1	1	5
B10	Wells - Agricultural/ Irrigation (H)	5	1	1	7
B10	Crops, irrigated (M)	3	1	1	5
B10	Fertilizer, Pesticide/ Herbicide Application (M)	3	1	1	5
B10	NPDES/WDR permitted discharges (H)	5	1	1	7
B10	Above ground storage tanks (M)	3	1	1	5
B10	Wells – Oil, Gas, Geothermal (H)	5	1	1	7
B10	Construction/demolition staging areas (M)	3	1	1	5
B10	Wells – Water supply (M)	3	1	1	5
B10	Transportation Corridors- Historic railroad right-of-ways (M)	3	1	1	5
B10	Transportation Corridors- Road Right-of-ways (herbicide use) (M)	3	1	1	5
B10	Transportation Corridors- Roads/ Streets (L)	1	1	1	3
B10	Transportation Corridors- Railroads (M)	3	1	1	5
B10	Storm Drain Discharge Points (M)	3	1	1	5
B10	Storm Water Detention Facilities (M)	3	1	1	5
B10	Surface water - streams/ lakes/rivers (L)	1	1	1	3
B10	Wells – monitoring, test holes (L)	1	1	1	3
Unknown	Wood preserving/treating (H)	5	0	1	6
Unknown	Wood/pulp/paper processing and mills (H)	5	0	1	6
Unknown	Utility stations - maintenance areas (H)	5	0	1	6
Unknown	Wastewater treatment plants (VH in Zone A, otherwise H)	5	0	1	6
Unknown	Waste transfer/recycling stations (M)	3	0	1	4
Unknown	Historic gas stations (VH)	7	0	1	8
Unknown	Historic waste dumps/ landfills (VH)	7	0	1	8
Unknown	Transportation Corridors- Historic railroad right-of-ways (M)	3	0	1	4
Unknown	Known Contaminant Plumes (VH)	7	0	1	8
Unknown	Mining operations - Historic (VH)	7	0	1	8

HORIZONTAL WELL DATA SHEET (Page 1 of 2)

Complete as much information as possible. Leave blank if information is not available, use N.A. if not applicable.		
** Indicates items required for Source Water Assessment*		
*** Indicates additional items required for assessments and Ground Water Rule*		
	(separate multiple entries in field with semi-colon)	Actual, Estimated or Default?
GENERAL INFORMATION		
System Name	Schulte Rd. Warehouse	
System Number	CA3902181	
Source of Information *(well log, DHS/County files, system, etc)*	Various	
Organization Collecting Information *(DHS, County, System, other)*	Schaaf & Wheeler	
Date Information Collected/Updated	12/8/2020	
SOURCE IDENTIFICATION		
* Source Name	2020-14800 Well #3	(WELL #3)
* DHS Source Identification Number (**FRDS ID No.**)	3902181-003	
DWR Well Log on File? ("YES" or "NO")	YES	
State Well Number (from DWR)	003	
Well Status (Active, Standby, Inactive)	ACTIVE	
SOURCE LOCATION		
Ground Surface Elevation (ft above Mean Sea Level)		
Street Address	14800 W. Schulte Rd.	
Nearest Cross Street	S. Lammers Rd.	
City	Tracy	
County	San Joaquin	
* Neighborhood/Surrounding Area *(see Note 1)*	I, A	
Site plan on file? ("YES" or "NO")		
SANITARY CONDITIONS		
** Distance to closest sewage facilities (ft)	500ft	(On-site domestic)
Distance to Active Wells (ft)	250 ft +	
Distance to Abandoned Wells (ft)	1,500ft +	Estimated
Distance to Surface Water (ft)	3,000ft +	Actual, canal
** Size of controlled area around well (square feet)	50ft +	
* Type of access control to well site *(fencing, building, etc)*	Fencing	
* Surface Seal? (Concrete slab)("YES", "NO" or "UNKNOWN")	YES	
* Dimensions of concrete slab: Length(ft)/ Width(ft)/ Thick(in)	10' x 10'	
* Within 100 year flood plain? ("YES", "NO" or "UNKNOWN")	NO	
* Drainage away from well? ("YES" or "NO")	YES	
ENCLOSURE/HOUSING		
Enclosure Type *(building, vault, none, etc.)*	None	
Floor material	Cement	
Located in Pit? ("YES" or "NO")	NO	
Pit depth (feet) (if applicable)	N/A	
WELL CONSTRUCTION		
Date drilled	8/6/2020	
Drilling Method	Air Drilling	
Length of Well (feet)	390ft	
Number of pipes	18-20	Estimated
Casing Diameter (inches)	8"	
Casing Material	HSLA Steel, Stainless Perf	
* Total length of perforated interval (ft) (or "UNKNOWN")	30 ft	
* Annular Seal?("YES", "NO" or "UNKNOWN") *(See Note 3)*	YES	
* Length of Annular Seal (ft)	200ft	
Material of Annular Seal *(cement grout, bentonite, etc.)*	Cement	
	(separate multiple entries in field with semi-colon)	Actual, Estimated or Default?

HORIZONTAL WELL DATA SHEET (Page 2 of 2)

Complete as much information as possible. Leave blank if information is not available, use N.A. if not applicable.		
** Indicates items required for Source Water Assessment*		
*** Indicates additional items required for assessments and Ground Water Rule*		
AQUIFER		
* Aquifer Materials *(list all that apply: sand, silt, clay, gravel, rock, fractured rock)*	Sand, clay, gravel	
* Effective porosity (decimal percent) *(default = 0.2)* (or "UNKNOWN")	0.2	Default
* Confining layer (Impervious Strata) above aquifer? ("YES", "NO" or "UNKNOWN")	YES	
Thickness of confining layer, if known (ft)	120'	
Depth to confining layer, if known (ft below ground)	147'	
* Static water level (ft below ground surface)	165ft	
Static water level measurement: Date/Method	9/9/2020	
WELL PRODUCTION		
Well Yield (gpm)	260 gpm	
Well Yield Based On (i.e., pump test, etc.)	Well Test	
Date measured	9/9/2020	
Is the well metered? ("YES" or "NO")	YES	
Production (gallons per year)		
Frequency of Use (hours/year)		
Typical pumping duration (hours/day)		
PUMP		
Make		
Type		
Size (hp)		
* Capacity (gpm)		
Depth to suction intake (ft below ground surface)		
Lubrication Type		
Type of Power: *(i.e., electric, diesel, etc.)*	Electric	
Auxiliary power available? ("YES" or "NO")		
Operation controlled by: *(i.e., level in tank, pressure, etc.)*	Pressure	
Pump to Waste capability? ("YES" or "NO")	Yes	
Discharges to: *(i.e., distribution system, storage, etc.)*	Distribution, Storage	
REMARKS AND DEFECTS (use additional sheets as necessary)		
NOTES		
1. Neighborhood/Surrounding Area (list all that apply): A= Agricultural, Ru = Rural, Re = Residential, Co = Commercial, I = Industrial, Mu = Municipal, P = Pristine, O = Other		
2. Conductor Casing - Oversized casing used to stabilize bore hole during well construction. Should be removed during installation of annular seal.		
3. Annular Seal - Seal of grout in the space between the well casing and the wall of the drilled hole. Sometimes called "sanitary seal".		

Drinking Water Source Assessment

Water System

Schulte Road Warehouse Public Water System

San Joaquin County

Water Source

2017-14990 East Well (Well #2)

Assessment Date

February, 2019

California Department of Health Services
Northern California Drinking Water Field Operations Branch
DHS Stockton, District 10

District No.	10
System No.	CA3902181
Source No.	#002
PS Code	3902181-002

Checklist for Drinking Water Source Assessment - Ground Water Source

District Name **Northern California FOB - Stockton** District No. **10** County **San Joaquin County**
System Name **Schulte Road Warehouse Public Water System** System No. **CA3902181**
Source Name **2017-14990 East Well (Well #2)** Source No. **#002** PS Code: **3902181-002**

Completed by **Keven Jones, Quality Service Inc.** Date **02/14/2019**

The following information should be contained in the drinking water source assessment submittal.

- [x] Cover Page
- [x] Checklist *(this form)*
- [x] Assessment Summary
- [x] Vulnerability Summary
- [ ] Source Location Form *(not currently available, contact DHS for information)*
- [x] Delineation of groundwater protection zones
- [x] Source Data Sheet (select appropriate form)
  - [x] Well Data Sheet
  - [ ] Spring Data Sheet
  - [ ] Horizontal Well Data Sheet
- [x] Physical Barrier Effectiveness Checklist
- [x] Possible Contaminating Activities (PCA) inventory form
- [x] Vulnerability Ranking
- [x] Assessment map with source location and protection zone
- [x] Additional maps (optional) (e.g. local maps of zones and PCAs, recharge area maps, or maps indicating direction of ground water flow)
- [x] Means of Public Availability of Report (indicate those that will be used)
  - [x] Notice in the Consumer Confidence Report* (minimum)
  - [x] Copy in regulatory agency (DHS or LPA) office (minimum)
  - [x] Copy in public water system office (recommended)
  - [ ] Copy in public library/libraries
  - [ ] Internet (indicate Internet address: _____)
  - [ ] Other (describe)

*The CCR should indicate where customers can review the assessments.

Drinking Water Source Assessment and Protection (DWSAP) Program

Assessment Summary

District Name **Northern California FOB - Stockton** District No. **10** County **San Joaquin County**
System Name **Schulte Road Warehouse Public Water System** System No. **CA3902181**
Source Name **2017-14990 East Well (Well #2)** Source No. **#002** PS Code: **3902181-002**

Completed by **Keven Jones, Quality Service Inc.** Date **02/14/2019**

Description of System and Source

The Schulte Road Warehouse Public Water System is located in San Joaquin County and serves the populations at 14900 and (eventually) 14800 Schulte Road, Tracy, CA 95377.[1] The parcels are Book 209, Page 24, Parcels 040 and (eventually) 023, respectively, and the general land use is I-G (industrial), though there is adjacent agricultural zoning. There is one service connection from the existing primary supply well (Well #1, located on the southwest edge of parcel 040) at 15000 W. Schulte, which supplies water for the employees at the warehouse. However, recent construction has seen a new well and service connection installed at 14900 location (parcel 040). The property at 14800 West Schulte (parcel 023) was recently acquired and will eventually see another groundwater source and service connection in this area of study.

The drinking water source for the water system is groundwater, which is drawn from the Tracy Subbasin of the San Joaquin Valley Basin (number 5-022.15). Groundwater recharge for the San Joaquin Basin is primarily from agricultural irrigation, precipitation, and lateral movement of surface water drainage courses. Attachments have been included to show regional water recharge areas. Groundwater, at the depth of the well screens (intermediate to the Corcoran Clay layer and deeper, high saline aquifer) is described in the 2011 City of Tracy Urban Water Management Plan as flowing from the east to the west towards the pumping trough at the southern portion of the City. This conforms with the groundwater contours shown in (link below), and means that the localized flow is from north to south due to the site's location. Review of local CASGEM water elevation, and triangulating flow against the water elevation inferred from the driller's log for the 2017-1499 East Well (see attachments), conforms to these findings as well.

Comments:

Contents of this Assessment

Yes	☑	**No**	☐	**Assesment Summary**
Yes	☑	**No**	☐	**Vulnerability Summary**
Yes	☐	**No**	☑	**Source Location Form**
Yes	☑	**No**	☐	**Delineation of Protection Zones**
Yes	☑	**No**	☐	**Physical Barrier Effectiveness Checklist**
Yes	☑	**No**	☐	**Source Data Sheet**
Yes	☑	**No**	☐	**Inventory of Possible Contaminating Activities**
Yes	☑	**No**	☐	**Vulnerability Ranking**
Yes	☑	**No**	☐	**Assessment Map**

Assessment Procedures

The assessment of the source was conducted as a joint effort between the San Joaquin County Environmental Health Department, the Schulte Road Public Water System, and Quality Service, INC.

The following sources of information were used in the assessment: water system files, DHS files, County Records, EDR Radius Search with GeoCheck, LightBox, Google Earth, GeoTracker, CASGEM Online System, SDWIS, DWR Well Completion Report Map Application, Groundwater Report by SJC Flood Control and Water Conservation District (dated Spring 2016 [http://www.sjwater.org/Documents/Groundwater%20Reports/Groundwater%20Report-Spring%202016.pdf]), DWR Water Management Planning Tool, 2011 City of Tracy Urban Water Management Plan, Well Completion Report #e0358693 (dated 10/23/2017), Partial Architectural Drawing (dated 04/10/2018), and Well Test Report by Millie Severson, Inc. (dated 12/06/2017). Procedures used to conduct the assessment include: file review, drafting and measurements with DraftSight, calculations, discussions with water system, and use of GIS.

Drinking Water Source Assessment and Protection (DWSAP) Program

Vulnerability Summary

District Name **Northern California FOB - Stockton** District No. **10** County **San Joaquin**
System Name **Schulte Road Warehouse Public Water System** System No. **CA3902181**
Source Name **2017-14990 East Well (Well #2)** Source No. **#002** PS Code: **3902181-002**

Completed by **Keven Jones, Quality Service Inc.** Date **02/14/2019**

THE FOLLOWING INFORMATION MUST BE INCLUDED IN THE SYSTEM CONSUMER CONFIDENCE REPORT

A source water assessment was conducted for Wells #1 and #2 Schulte Road Public Water System in February, 2019.

The source is considered most vulnerable to the following activities associated with contaminants detected in the water supply:

Human activity may be linked to some contaminants that have historically been detected in the local groundwater supply (though at still safe levels). These activities include: nearby domestic and industrial wastewater storage/processing and chemical storage/processing.

The source is considered most vulnerable to the following activities not associated with any detected contaminants:

The primary groundwater sources for the Schulte Rd. Warehouse Public Water System may be vulnerable to human activities related to agriculture, namely pesticide/herbicide application and storage. It is possible that the sources could be vulnerable to past activities as related to historic gas stations, dumps, landfills, mining and/or contamination plumes. However, not enough information is available about these historic activities to comment decidedly about the sources' vulnerability to them.

Discussion of Vulnerability:

The vulnerability assessment of a groundwater source is a standardized evaluation of the activities that pose a risk of contaminating the water. This assessment takes into account how proximal the activity is, the relative degree of hazard it poses, how the source is constructed, and how effectively the specific lithology of the well prevents migration of contaminants.

As a consumer, you have a right to know what's going on with the quality and nature of the water you receive. You will be notified if the analytical monitoring program shows the water contains contaminants; this evaluation is not to say that the water supply for Shulte Road Warehouse system is unsafe, nor is it to say that the activities that have been identified will cause the source to be contaminated now or in the future. This assessment is used to inform the water system about potential hazards so that management practices may be employed or bolstered to protect the potable water supply. It also aids in selecting chemicals to monitor for, and it can help to resolve any issues that may end up arising.

Delineation of Ground Water Protection Zones

District Name **Northern California FOB - Stockton** District No. **10** County **San Joaquin**
System Name **Schulte Road Warehouse Public Water System** System No. **CA3902181**
Source Name **2017-14990 East Well (Well #2)** Source No. **#002** PS Code: **3902181-002**

Completed by **Keven Jones, Quality Service Inc.** Date **02/14/2019**

Indicate the method used to delineate the zones:

(For more information refer to the Drinking Water Source Assessment and Protection document)

☐ Calculated Fixed Radius (Default) (Show calculations below)

☑ Modified Calculated Fixed Radius (Show calculations below and attach documentation for direction of ground water flow)

☐ More detailed methods
Type used (i.e., analytical methods, hydrogeologic mapping, modeling):

☐ Arbitrary Fixed Radius (For use only by or with permission of DHS—use minimum distances shown below)

Calculated Fixed Radius Equation

The equation for the calculated fixed radius (R) is $R_t = \sqrt{Q\,t / \pi\,\eta\,H}$

$R_t = R_2$, R_5, or R_{10} corresponding to t (Calculate R for each travel time)
Q = maximum pumping capacity of well (ft^3/year = gpm * 70,267): **8,432,040 cuft/year**
t = time of travel (years), 2, 5 and 10 years
π = 3.1416
η = effective porosity (decimal percent) *(If unknown, assume 0.2)*: **Effective porosity is unknown**
H = screened interval of well (feet): **12 feet (between 363' - 375')**
(If unknown, assume 10% of Q gpm, 10 ft min)

Specific methods follow on next page

Calculated Fixed Radius Delineation Method (Default)

Using the equation presented above, calculate the size of zones for the appropriate aquifer setting of the source.

Porous Media Aquifer

Zone A (2 year TOT) R_2 = 1496.5 ft, minimum = 600 ft —use larger: 1496.5 ft
Zone B5 (5 year TOT) R_5 = 2364.7 ft, minimum = 1,000 ft—use larger: 2364.7 ft
Zone B10 (10 year TOT) R_{10} = 3344 ft, minimum = 1,500 ft—use larger: 3344 ft

Fractured Rock Aquifer

(Increase size of zones by 50%)

Zone A (2 year TOT) $1.5R_2$ = _____ ft, minimum = 900 ft—use larger: _____ ft
Zone B5 (5 year TOT) $1.5R_5$ = _____ ft, minimum = 1,500 ft—use larger: _____ ft
Zone B10 (10 year TOT) $1.5R_{10}$ = _____ ft, minimum = 2,250 ft—use larger: _____ ft

Modified Calculated Fixed Radius Delineation Method

In porous media aquifers, if the direction of ground water flow is known (see Section 6.2.3), the default zone circle may be shifted upgradient by $0.5R_t$. The upgradient and downgradient limits of the zone are determined below.

Zone A (2-year TOT)

upgradient distance = $1.5R_2$ = 2243.3 ft, minimum = 900 ft, use larger: 2243.3 ft
downgradient distance = $0.5R_2$ = 747.7 ft, minimum = 300 ft, use larger: 747.7 ft

Zone B5 (5-year TOT)

upgradient distance = $1.5R_5$ = 3,547.0 ft, minimum = 1,500 ft, use larger: 3,547.0 ft
downgradient distance = $0.5R_5$ = 1,182.3 ft, minimum = 500 ft, use larger: 1,182.3 ft

Zone B10 (10-year TOT)

upgradient distance = $1.5R_{10}$ = 5,016.2 ft, minimum = 2,250 ft, use larger: 5,016.2 ft
downgradient distance = $0.5R_{10}$ = 1,672.1 ft, minimum = 750 ft, use larger: 1,672.1 ft

Physical Barrier Effectiveness Checklist - Ground Water Source

District Name **Northern California FOB - Stockton** District No. **10** County **San Joaquin**
System Name **Schulte Road Warehouse Public Water System** System No. **CA3902181**
Source Name **2017-14990 East Well (Well #2)** Source No. **#002** PS Code: **3902181-002**

Completed by **Keven Jones, Quality Service Inc.** Date **02/14/2019**

Use the DHS Well Data Sheet (separate document) to complete the following form.

Directions:

1. Read through the form and collect the information needed to complete the form. (Hydrogeology, Soils, Presence of abandoned or improperly destroyed wells, Well construction and operation.)

2. Determine Parameter A, Type of Aquifer.
   - If the aquifer is confined, use the right-hand column, and evaluate only the parameters indicated for confined aquifers.
   - If the aquifer is unconfined, semi-confined, or the degree of confinement is unknown, or if the aquifer is fractured rock, use the left-hand column and evaluate only the parameters for unconfined aquifers.

3. For each parameter appropriate for the source, place a check in the box for the answer that most closely applies to that source. If more than one answer is possible, select the more conservative (i.e. lower points) answer. *[For example, if the depth to static water (Parameter D) has varied between 45 and 55 feet, choose answer 2 (20 to 50 feet).]*

4. Add the points in the column appropriate for the source and interpret the score as shown on the bottom of the last page.
   - Determine whether the source has a High, Moderate or Low Physical Barrier Effectiveness. Use this in the Vulnerability analysis. The higher the points, generally the more effective the source and site are to retarding the movement of contaminants to the water supply.

NOTE: If the source is located in fractured rock the source is considered to have a Low Physical Barrier Effectiveness, regardless of the point total. So, if Parameter B, Aquifer Material is 3, the remainder of the form does not need to be completed.

Physical Barrier Effectiveness (PBE) – Ground Water, page 1 of 2
Source Name: 2017-14900 East Well (Well #2) & Well #1 Source No.: #001 & 002

PARAMETER	*POINTS*			
	Unconfined		Confined	
A. TYPE OF AQUIFER Confinement *(up to **50** points maximum)* choose one				
a. Unconfined, Semi-confined, Fractured Rock, Unknown	0			
b. Confined			50	50
B. AQUIFER MATERIAL (Unconfined Aquifer) Type of materials within the aquifer *(up to **20** points maximum)* choose one				
1. Porous Media (Interbedded sands, silts, clays, gravels) with continuous clay layer minimum 25' thick above water table within Zone A	20			
2. Porous Media (Interbedded sands, silts, clays, and gravels)	10			
3. Fractured rock * (* Low Physical Barrier Effectiveness - no further questions required)	0			
C. PATHWAYS OF CONTAMINATION (All Aquifers) Presence of Abandoned or Improperly Destroyed Wells *(up to **10** points maximum)*				
1. Are they present within Zone A (2-year time of travel (TOT) distance)?				
a. Yes or unknown	0		0	0
b. No	5		5	
2. Are they present within Zone B5 (2- to 5-year TOT distance)?				
a. Yes or unknown	0		0	0
b. No	3		3	
3. Are they present within Zone B10 (5- to 10-year TOT distance)?				
a. Yes or unknown	0		0	0
b. No	2		2	
D. STATIC WATER CONDITIONS (Unconfined Aquifer) Depth to static Water (DTW) = _____ feet *(up to **10** points maximum)* choose one				
1. 0 to 20 feet	0			
2. 20 to 50 feet	2			
3. 50 to 100 feet	6			
4. > 100 feet	10			
E. WELL OPERATION (Unconfined Aquifer) Depth to Uppermost Perforations (DUP) DUP = _____ feet Maximum Pumping Rate of Well (Q) Q = _____ gallons/minute Length of screened interval (H) H = _____ feet				
[(DUP – DTW) / (Q/H)] = *(up to **10** points maximum)* choose one				
1. < 5	0			
2. 5 to 10	5			
3. > 10	10			

Physical Barrier Effectiveness – Ground Water, page 2 of 2
Source Name: 2017-14900 East Well (Well #2) & Well #1 Source No. #001 & #002

PARAMETER	*POINTS*			
	Unconfined		Confined	
F. HYDRAULIC HEAD (Confined Aquifer) What is the relationship in hydraulic head between the confined aquifer and the overlying unconfined aquifer? (i.e. does the well flow under artesian conditions?) *(up to **20** points maximum)* choose one				
1. head in confined aquifer is higher than head in unconfined aquifer under all conditions			20	
2. head in confined aquifer is higher than head in unconfined aquifer under static conditions			10	
3. head in confined aquifer is lower than or same as head in unconfined aquifer			0	0
4. unknown			0	
G. WELL CONSTRUCTION (All Aquifers) 1. Sanitary Seal (Annular Seal) Depth = 350 feet *(up to **10** points maximum)* choose one				
a. None or less than 20 feet deep	0		0	
b. 20 to 50 ft deep	6		10	
c. 50 ft or greater	10		10	10
2. Surface seal (concrete cap) *(up to **4** points maximum)* choose one				
a. Not present or improperly constructed	0		0	
b. Watertight, slopes away from well, at least 2' laterally in all directions	4		4	4
3. Flooding potential at well site *(up to **1** point maximum)* choose one				
a. Subject to localized flooding (i.e. in low area or unsealed pit or vault) or Within 100 year flood plain	0		0	
b. Not subject to flooding	1		1	1
4. Security at well site *(up to **5** points maximum)* choose one				
a. Not secure	0		0	
b. Secure (i.e. housing, fencing, etc.)	5		5	5
Maximum Points Possible	70		100	
POINT TOTAL FOR THIS SOURCE			**70**	

Physical Barrier Effectiveness SCORE INTERPRETATION

	Point Total		Effectiveness	
☐	**0 to 35**	=	**Low**	(includes all sources in Fractured Rock)
☐	**36 to 69**	=	**Moderate**	
☑	**70 to 100**	=	**High**	

Possible Contaminating Activities (PCA) Inventory Form - Ground Water

District Name **Northern FOB - Stockton** District No. **10** County **San Joaquin**
System Name **Schulte Warehouse Public Water System** System No. **CA3902181**
Source Name **2017-14990 East Well (Well #2)** Source No. **#002** PS Code: **3902181-002**

Completed by **Keven Jones, Quality Service Inc.** Date **02/14/2019**

Check the PCA tables that will be used for this drinking water source (assessment must include the "Other" checklist and at least one of the remaining three checklists):

- Commercial/Industrial ☑
- Residential/Municipal ☐
- Agricultural/Rural ☐
- Other (required for all) ☑

Proceed to appropriate checklist or checklists. Indicate whether the PCA is located in the zone by placing a Y (yes), N (no), or U (unknown) in the appropriate boxes.
Example:

Zone A	Zone B5	Zone B10
Y	N	N
N	Y	U
U	N	N

Risk Ranking of PCAs, where VH = Very High Risk, H = High Risk, M = Moderate Risk, L = Low Risk

PCA Checklist COMMERCIAL/INDUSTRIAL

PCA (Risk Ranking)	PCA in Zone A?	PCA in Zone B5?	PCA in Zone B10?	Comments
Automobile- Body shops (H)	N	N	N	
Automobile- Car washes (M)	N	N	N	
Automobile- Gas stations (VH)	N	N	N	
Automobile- Repair shops (H)	N	N	N	
Boat services/repair/ refinishing (H)	N	N	N	
Chemical/petroleum pipelines (H)	N	N	N	
Chemical/petroleum processing/storage (VH)	N	Y	Y	
Dry cleaners (VH)	N	N	N	
Electrical/electronic manufacturing (H)	N	N	N	
Fleet/truck/bus terminals (H)	N	N	N	
Furniture repair/ manufacturing (H)	N	N	N	
Home manufacturing (H)	N	N	N	
Junk/scrap/salvage yards (H)	N	N	N	
Machine shops (H)	N	N	N	
Metal plating/ finishing/fabricating (VH)	N	N	N	
Photo processing/printing (H)	N	N	N	
Plastics/synthetics producers (VH)	N	N	N	
Research laboratories (H)	N	N	N	
Wood preserving/treating (H)	U	U	U	
Wood/pulp/paper processing and mills (H)	U	U	U	
Lumber processing and manufacturing (H)	N	N	N	
Sewer collection systems (H, if in Zone A, otherwise L)	Y	N	Y	
Parking lots/malls (>50 spaces) (M)	N	N	N	
Cement/concrete plants (M)	N	N	N	
Food processing (M)	N	N	N	
Funeral services/graveyards (M)	N	N	N	
Hardware/lumber/parts stores (M)	N	N	N	
Appliance/Electronic Repair (L)	N	N	N	
Office buildings/complexes (L)	N	Y	Y	
Rental Yards (L)	N	N	N	
RV/mini storage (L)	N	N	N	

PCA Checklist OTHER ACTIVITIES

PCA (Risk Ranking)	PCA in Zone A?	PCA in Zone B5?	PCA in Zone B10?	Comments
NPDES/WDR permitted discharges (H)	Y	Y	Y	
Underground Injection of Commercial/Industrial Discharges (VH)	N	N	N	
Historic gas stations (VH)	U	U	U	
Historic waste dumps/ landfills (VH)	U	U	U	
Illegal activities/ unauthorized dumping (H)	N	N	N	
Injection wells/ dry wells/ sumps (VH)	N	N	N	
Known Contaminant Plumes (VH)	U	U	U	
Military installations (VH)	N	N	N	
Mining operations - Historic (VH)	U	U	U	
Mining operations - Active (VH)	N	N	N	
Mining - Sand/Gravel (H)	N	N	N	
Wells - Oil, Gas, Geothermal (H)	N	N	Y	
Salt Water Intrusion (H)	N	N	N	
Recreational area - surface water source (H)	N	N	N	
Underground storage tanks - Confirmed leaking tanks (VH)	N	N	N	
Underground storage tanks - Decommissioned - inactive tanks (L)	Y	N	N	
Underground storage tanks - Non-regulated tanks (tanks smaller than regulatory limit) (H)	N	N	N	
Underground storage tanks - Not yet upgraded or registered tanks (H)	N	N	N	
Underground storage tanks - Upgraded and/or registered - active tanks (L)	N	N	N	
Above ground storage tanks (M)	Y	Y	Y	
Wells - Water supply (M)	N	Y	Y	
Construction/demolition staging areas (M)	Y	Y	Y	
Contractor or government agency equipment storage yards (M)	N	N	N	
Dredging (M)	N	N	N	
Transportation corridors - Freeways/state highways (M)	N	N	N	
Transportation corridors - Railroads (M)	N	Y	Y	
Transportation corridors - Historic railroad right-of-ways (M)	U	U	U	
Transportation corridors - Road Right-of-ways (herbicide use areas) (M)	Y	Y	Y	
Transportation corridors - Roads/ Streets (L)	Y	Y	Y	
Hospitals (M)	N	N	N	
Storm Drain Discharge Points (M)	N	Y	Y	
Storm Water Detention Facilities (M)	N	Y	Y	

PCA Checklist OTHER ACTIVITIES (continued)

PCA (Risk Ranking)	PCA in Zone A?	PCA in Zone B5?	PCA in Zone B10?	Comments
Artificial Recharge Projects - Injection wells (potable water) (L)	N	N	N	
Artificial Recharge Projects - Injection wells (non-potable water) (M)	N	N	N	
Artificial Recharge Projects - Spreading Basins (potable water) (L)	N	N	N	
Artificial Recharge Projects - Spreading Basins (non-potable water) (M)	N	N	N	
Medical/dental offices/clinics (L)	N	N	N	
Veterinary offices/clinics (L)	N	N	N	
Surface water - streams/ lakes/rivers (L)	N	Y	Y	
Wells - monitoring, test holes (L)	N	Y	Y	

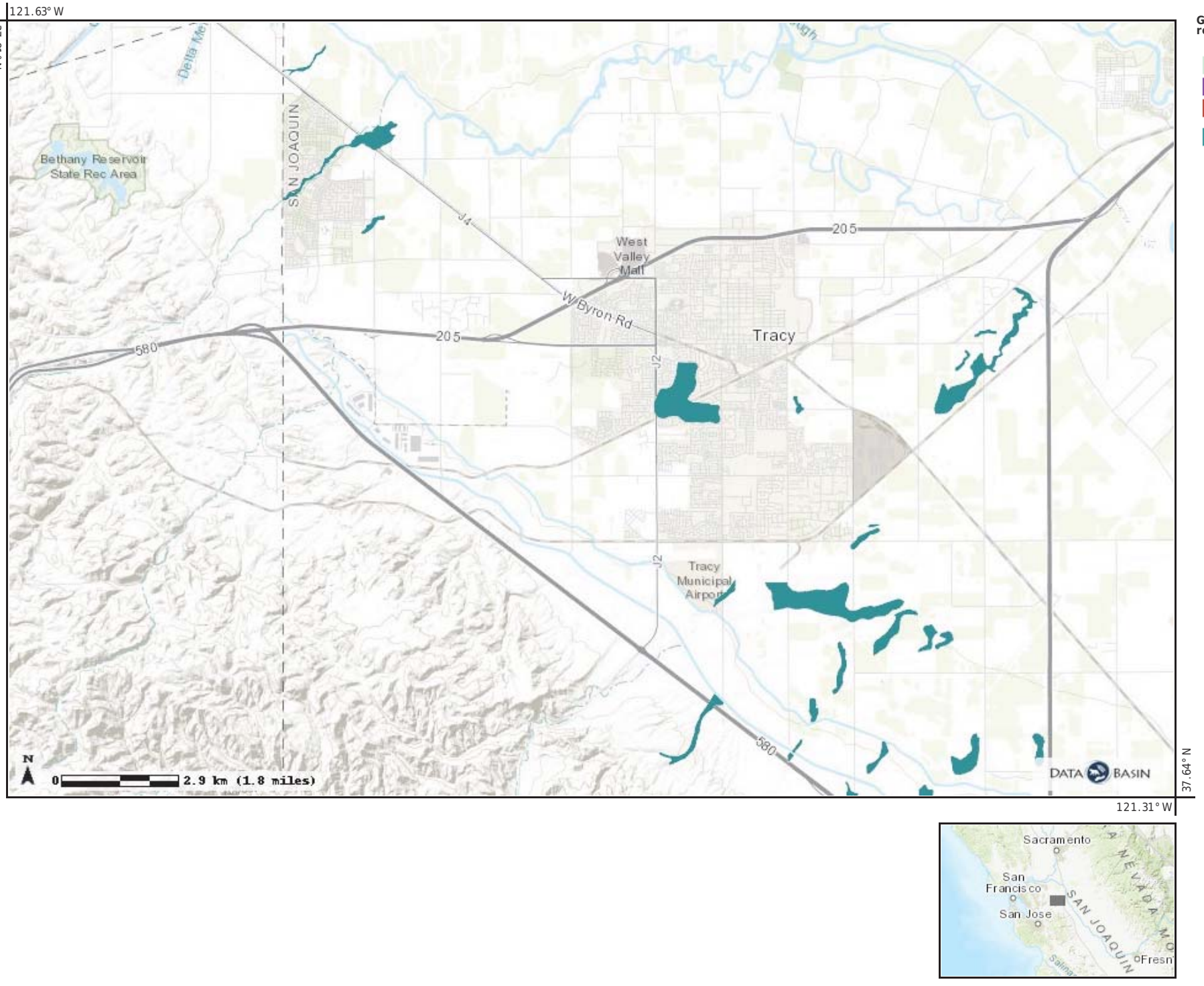

Legend

Groundwater Recharge Areas

Displaying: **GWRC_Cat**

- 1 - excessively-drained
- 2 - somewhat excessively-drained
- 3 - well-drained

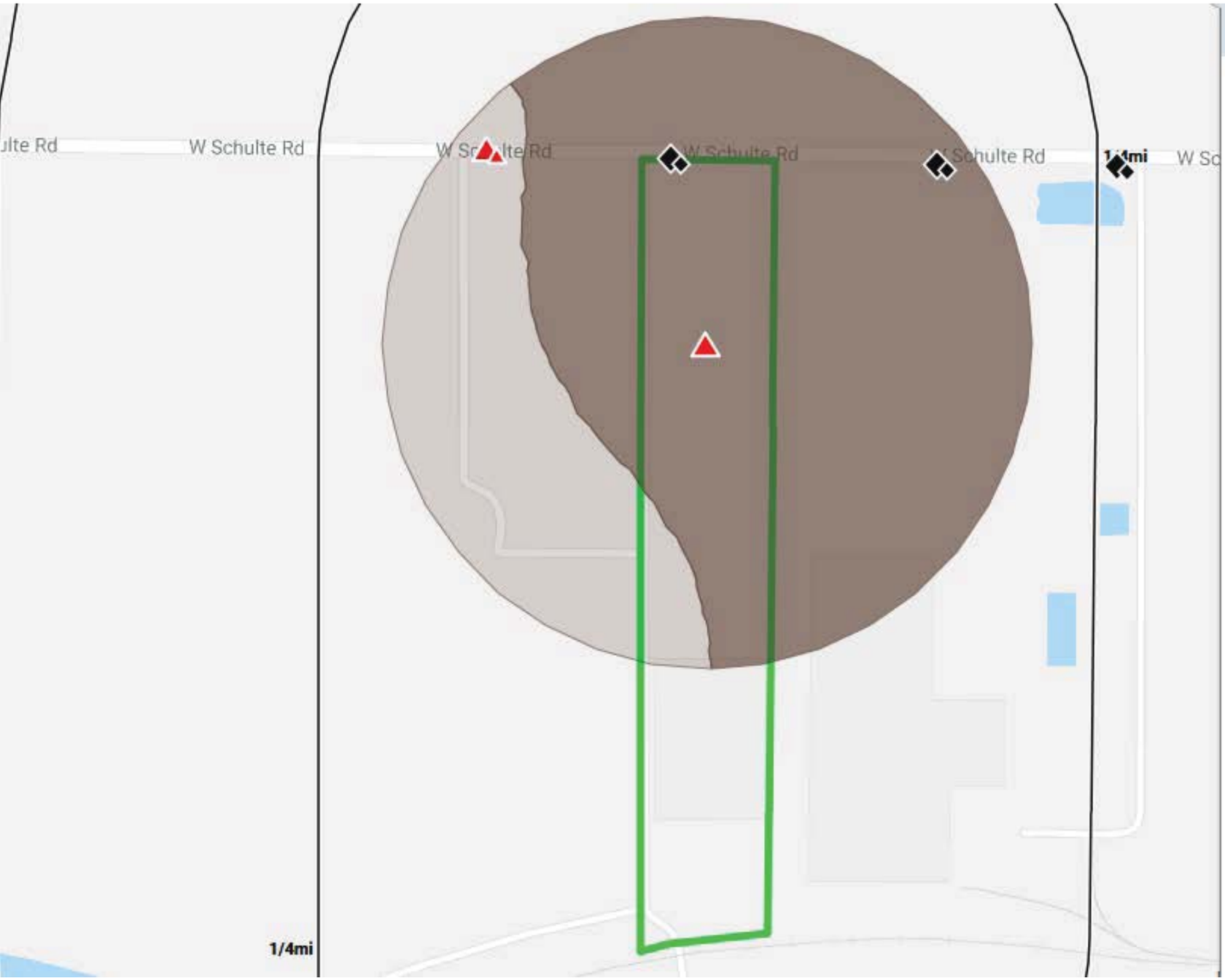

DETAILS

Soil Component Name:	Capay
Soil Surface Texture:	clay
Hydrologic Group:	Class D - Very slow infiltration rates. Soils are clayey, have a high water table, or are shallow to an impervious layer.
Soil Drainage Class:	Moderately well drained
Hydric Status:	Partially hydric
Corrosion Potential - Uncoated Steel:	High
Depth to Bedrock Min:	> 0 inches
Depth to Watertable Min:	> 0 inches

Soil Layer Information

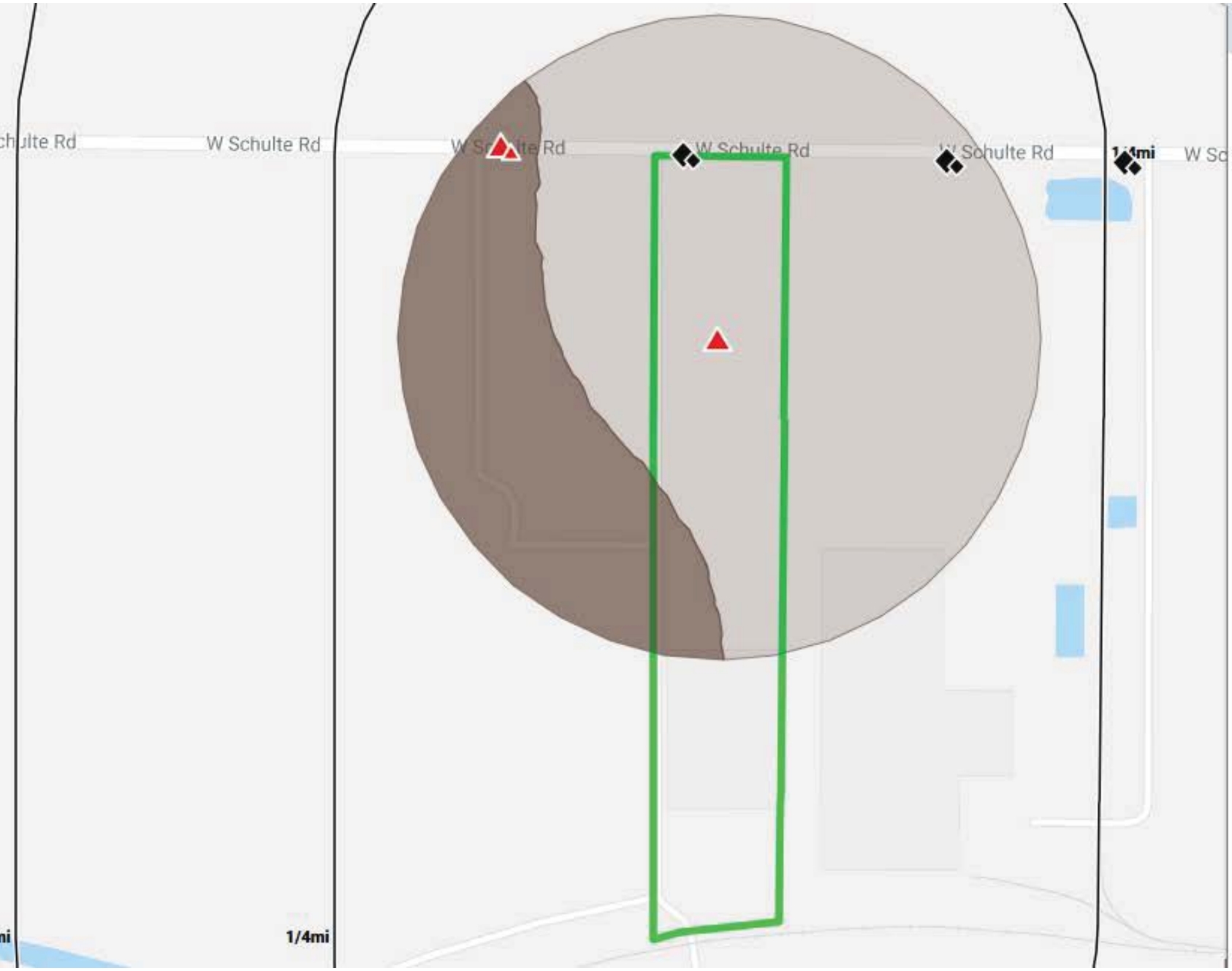

DETAILS

Soil Component Name:	STOMAR
Soil Surface Texture:	clay loam
Hydrologic Group:	Class C - Slow infiltration rates. Soils with layers impeding downward movement of water, or soils with moderately fine or fine textures.
Soil Drainage Class:	Well drained
Hydric Status:	Partially hydric
Corrosion Potential - Uncoated Steel:	High
Depth to Bedrock Min:	> 0 inches
Depth to Watertable Min:	> 0 inches

Soil Layer Information

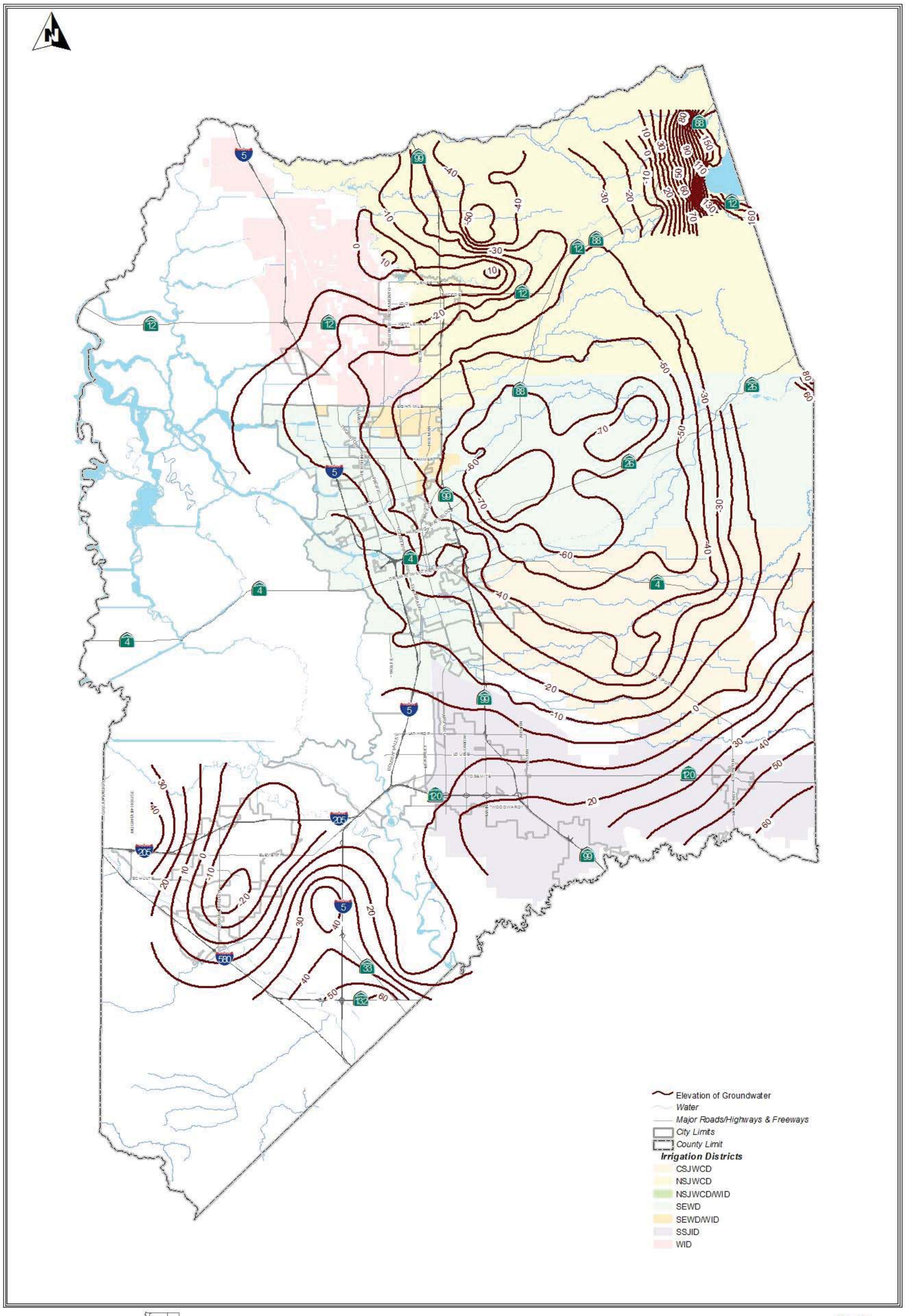

Figure 2-33 Lines of Equal Elevation of Groundwater Spring 2016

Groundwater Information Center Interactive Map Application

Water Levels | Boundaries

Clear all

Select Data Type:

- Depth
- Elevation
- Change

Select Layer Group:

Spring 2018 Elevation

Show Layers:

- Points
  - Groundwater Elevation Measurement
- Contours
- ColorRamp

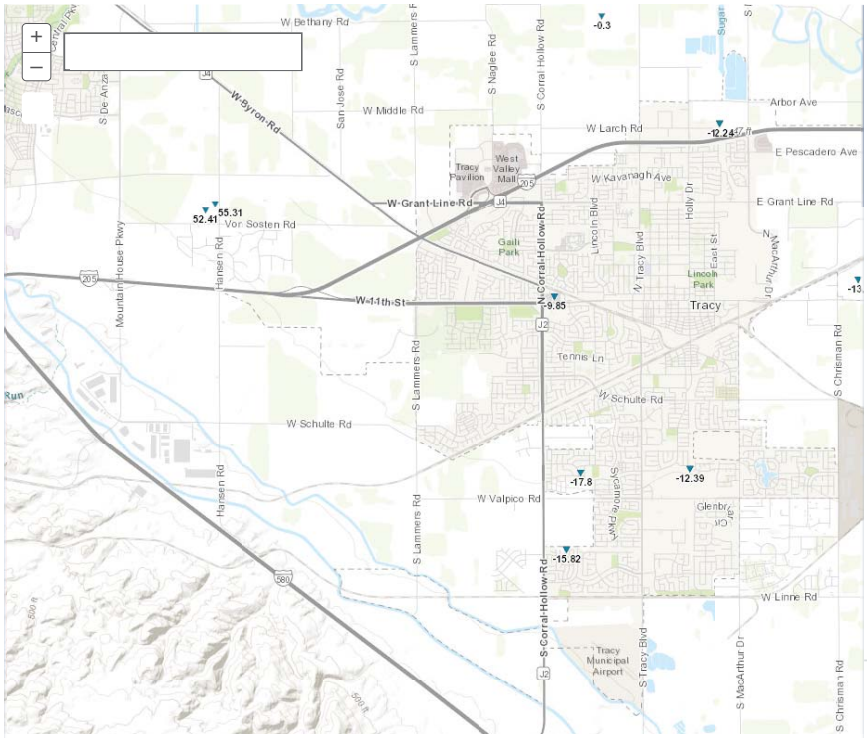

Satellite

below the ground surface. Increasing values indicate increasing depth to groundwater (or deeper/lower water levels). Negative values indicate that the groundwater level is above ground surface.

Points show the depth to groundwater values collected from wells. The contours and color ramp layers provide a smoothed approximation of the groundwater level "surface" based on the measurement data. The measurement values may not exactly match the contour or color ramp values because of the surface and contour smoothing process.

Water level measurements are selected based on measurement date and well construction information (where available) and approximate groundwater levels in the unconfined to uppermost semi-confined aquifers.

Layer Attribute Explanation:
Site Code: Unique Well ID
Local Well Name: Well ID defined by local agency or well owner
State Well Number: DWR State Well Number
WCR Number: Well Completion Report number (DWR form 188)
Well Use: Intended use of well
Msmt Date: Date water level measurement was collected
Msmt Agency: Agency that collected the water level measurement
WSEL: Groundwater Surface Elevation (ft-msl), NAVD88
DGBS: Groundwater Depth Below Ground Surface – (ft), NAVD88

Download

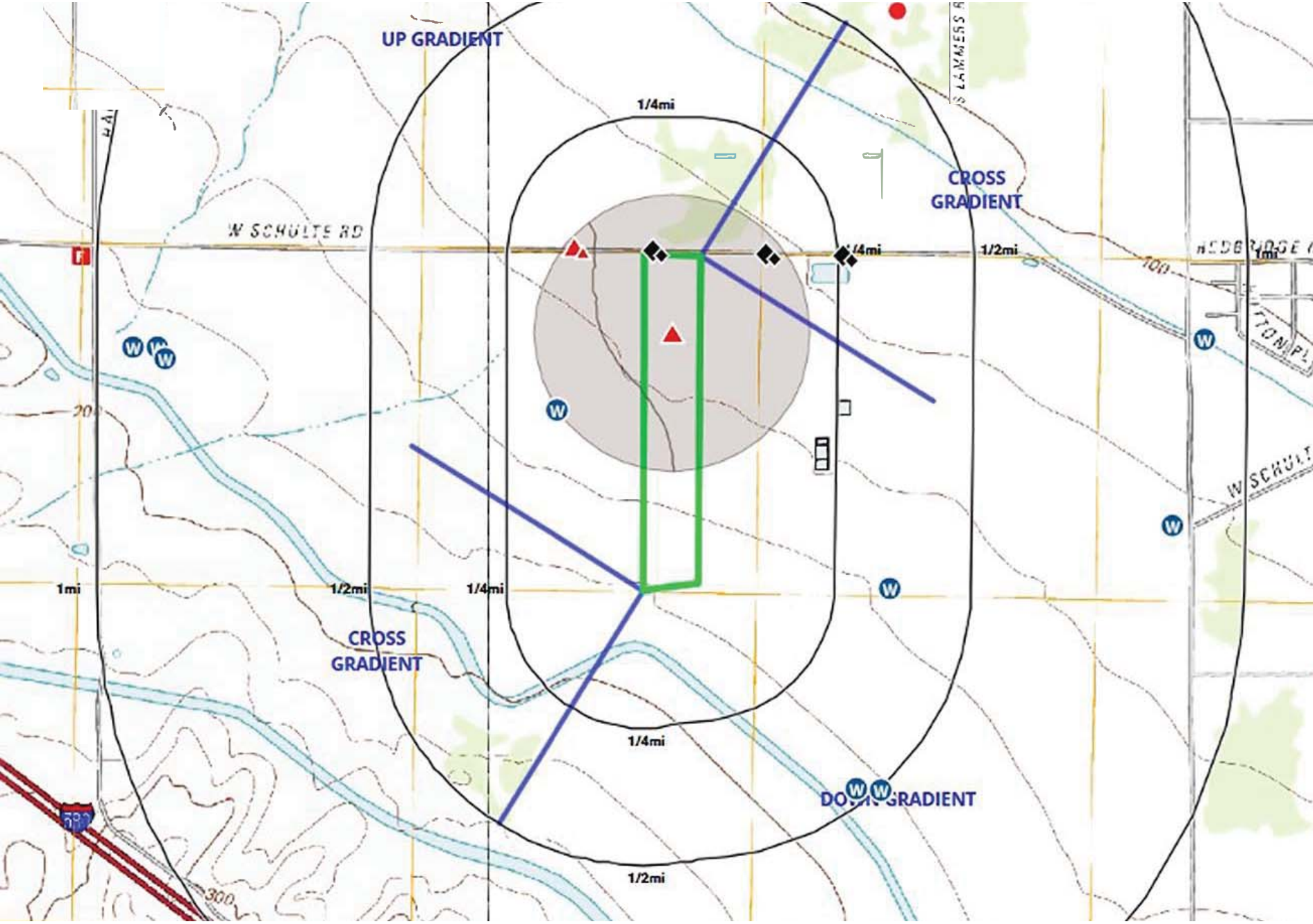
UP GRADIENT
1/4mi
CROSS
GRADIENT
W SCHULTE RD
1/4mi
1/2mi
1mi
1mi
1/2mi
1/4mi
CROSS
GRADIENT
1/4mi
1/2mi
W SCHULT

USGS science for a changing world

U.S. GEOLOGICAL SURVEY

US Topo

CALIFORNIA - SAN JOAQUIN COUNTY
7.5-MINUTE SERIES

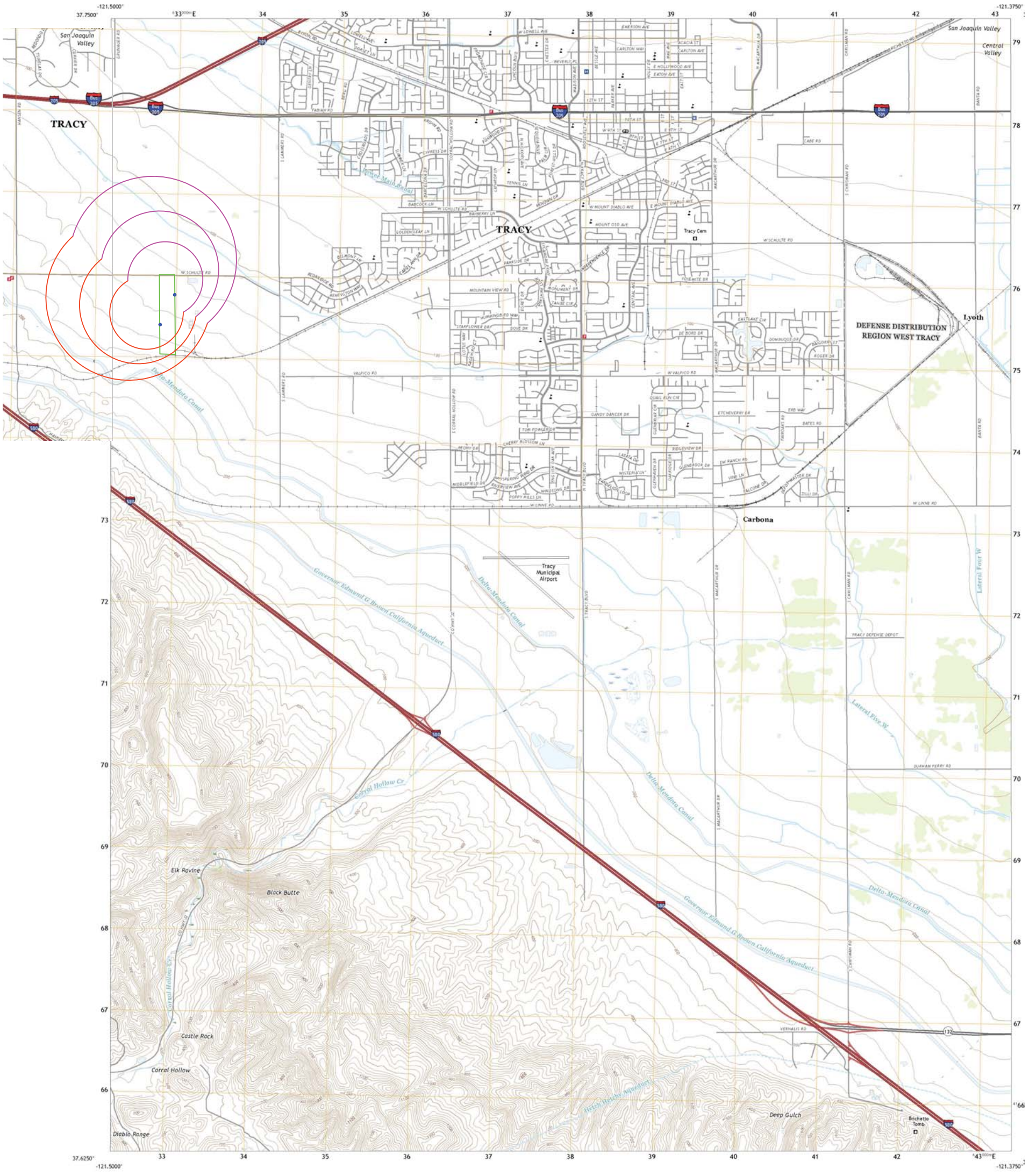

Produced by the United States Geological Survey
North American Datum of 1983 (NAD83)
World Geodetic System of 1984 (WGS84). Projection and 1 000-meter grid:Universal Transverse Mercator, Zone 10S
This map is not a legal document. Boundaries may be generalized for this map scale. Private lands within government reservations may not be shown. Obtain permission before entering private lands.

Imagery.....NAIP, June 2016 - October 2016
Roads.....U.S. Census Bureau, 2016
Names.....GNIS, 1981 - 2018
Hydrography.....National Hydrography Dataset, 2005 - 2018
Contours.....National Elevation Dataset, 2000 - 2012
Boundaries.....Multiple sources; see metadata file 2016 - 2017
Public Land Survey System.....BLM, 2018
Wetlands.....FWS National Wetlands Inventory 1982 - 1985

UTM GRID AND 2017 MAGNETIC NORTH DECLINATION AT CENTER OF SHEET

SCALE 1:24 000

CONTOUR INTERVAL 20 FEET
NORTH AMERICAN VERTICAL DATUM OF 1988

This map was produced to conform with the National Geospatial Program US Topo Product Standard, 2011. A metadata file associated with this product is draft version 0.6.18

ADJOINING QUADRANGLES
1 Clifton Court Forebay
2 Union Island
3 Lathrop
4 Midway
5 Vernalis
6 Cedar Mountain
7 Lone Tree Creek
8 Solyo

ROAD CLASSIFICATION
Expressway
Secondary Hwy
Ramp
Local Connector
Local Road
4WD
Interstate Route
US Route
State Route

TRACY, CA
2018

COMPANY: Quality Service, Inc.	
TITLE: Schulte Road Warehouse: Combined Delimitation for Wells 3902181-001&002	
DRAWN BY: Keven E. Jones	DATE DRAWN: 02/14/2019
CHECKED BY:	DATE CHECKED:

-121.5000°

37.7500°

633000m E

34

35

73

TRACY

San Joaquin Valley

Delta-Mendota Canal

COMPANY:	Quality Service, Inc.
TITLE:	Schulte Road Warehouse: Combined Delimitation for Wells 3902181-001&002
DRAWN BY: Keven E. Jones	DATE DRAWN: 02/14/2019
CHECKED BY:	DATE CHECKED:

VULNERABILITY RANKING MASTER LIST - Ground Water

District Name: Northern California FOB - Stockton | District No. 10 | County SJC

System Name: Schulte Road Warehouse Public Water System | System No CA3902181

Source Name: 2017-14900 East Well (Well #2) & Well #1 (Combined Radius) | Source No. #2 | PS Code: 3902181-002

Zone	PCA (Risk)	PCA Risk Points VH = 7 H = 5 M = 3 L = 1	Zone Points A = 5 B5 = 3 B10 = 1 Unknown = 0	PBE Points L = 5 M = 3 H = 1	Vulnerability Score Risk + Zone + PBE points
A	Sewer collection systems- Comm/Indus (H, if in Zone A, otherwise L)	5	5	1	11
A	Septic systems – low density (<1/acre) (H in Zone A, otherwise L)	5	5	1	11
A	Lagoons / liquid wastes (H)	5	5	1	11
A	Pesticide/fertilizer/ petroleum storage & transfer areas (H)	5	5	1	11
A	Agricultural Drainage (H in Zone A, otherwise M)	5	5	1	11
A	Wells - Agricultural/ Irrigation (H)	5	5	1	11
A	Crops, irrigated (M)	3	5	1	9
A	Fertilizer, Pesticide/ Herbicide Application (M)	3	5	1	9
A	NPDES/WDR permitted discharges (H)	5	5	1	11
A	USTs- Decommissioned - inactive tanks (L)	1	5	1	7
A	Above ground storage tanks (M)	3	5	1	9
A	Construction/demolition staging areas (M)	3	5	1	9
A	Transportation Corridors- Road Right-of-ways (herbicide use) (M)	3	5	1	9
A	Transportation Corridors- Roads/ Streets (L)	1	5	1	7
B5	Chemical/petroleum processing/storage (VH)	7	3	1	11
B5	Office buildings/complexes (L)	1	3	1	5
B5	Septic systems – low density (<1/acre) (H in Zone A, otherwise L)	1	3	1	5
B5	Lagoons / liquid wastes (H)	5	3	1	9
B5	Pesticide/fertilizer/ petroleum storage & transfer areas (H)	5	3	1	9
B5	Agricultural Drainage (H in Zone A, otherwise M)	3	3	1	7
B5	Wells - Agricultural/ Irrigation (H)	5	3	1	9
B5	Crops, irrigated (M)	3	3	1	7
B5	Fertilizer, Pesticide/ Herbicide Application (M)	3	3	1	7
B5	NPDES/WDR permitted discharges (H)	5	3	1	9
B5	Above ground storage tanks (M)	3	3	1	7
B5	Construction/demolition staging areas (M)	3	3	1	7
B5	Wells – Water supply (M)	3	3	1	7
B5	Transportation Corridors- Road Right-of-ways (herbicide use) (M)	3	3	1	7
B5	Transportation Corridors- Roads/ Streets (L)	1	3	1	5
B5	Storm Drain Discharge Points (M)	3	3	1	7
B5	Storm Water Detention Facilities (M)	3	3	1	7
B5	Surface water - streams/ lakes/rivers (L)	1	3	1	5
B5	Wells – monitoring, test holes (L)	1	3	1	5

B10	Chemical/petroleum processing/storage (VH)	7	1	1	9
B10	Sewer collection systems- Comm/Indus (H, if in Zone A, otherwise L)	1	1	1	3
B10	Office buildings/complexes (L)	1	1	1	3
B10	Septic systems – low density (<1/acre) (H in Zone A, otherwise L)	1	1	1	3
B10	Lagoons / liquid wastes (H)	5	1	1	7
B10	Agricultural Drainage (H in Zone A, otherwise M)	3	1	1	5
B10	Wells - Agricultural/ Irrigation (H)	5	1	1	7
B10	Crops, irrigated (M)	3	1	1	5
B10	Fertilizer, Pesticide/ Herbicide Application (M)	3	1	1	5
B10	NPDES/WDR permitted discharges (H)	5	1	1	7
B10	Above ground storage tanks (M)	3	1	1	5
B10	Wells – Oil, Gas, Geothermal (H)	5	1	1	7
B10	Construction/demolition staging areas (M)	3	1	1	5
B10	Wells – Water supply (M)	3	1	1	5
B10	Transportation Corridors- Historic railroad right-of-ways (M)	3	1	1	5
B10	Transportation Corridors- Road Right-of-ways (herbicide use) (M)	3	1	1	5
B10	Transportation Corridors- Roads/ Streets (L)	1	1	1	3
B10	Transportation Corridors- Railroads (M)	3	1	1	5
B10	Storm Drain Discharge Points (M)	3	1	1	5
B10	Storm Water Detention Facilities (M)	3	1	1	5
B10	Surface water - streams/ lakes/rivers (L)	1	1	1	3
B10	Wells – monitoring, test holes (L)	1	1	1	3
Unknown	Wood preserving/treating (H)	5	0	1	6
Unknown	Wood/pulp/paper processing and mills (H)	5	0	1	6
Unknown	Utility stations - maintenance areas (H)	5	0	1	6
Unknown	Wastewater treatment plants (VH in Zone A, otherwise H)	5	0	1	6
Unknown	Waste transfer/recycling stations (M)	3	0	1	4
Unknown	Historic gas stations (VH)	7	0	1	8
Unknown	Historic waste dumps/ landfills (VH)	7	0	1	8
Unknown	Transportation Corridors- Historic railroad right-of-ways (M)	3	0	1	4
Unknown	Known Contaminant Plumes (VH)	7	0	1	8
Unknown	Mining operations - Historic (VH)	7	0	1	8

HORIZONTAL WELL DATA SHEET (Page 1 of 2)

Complete as much information as possible. Leave blank if information is not available, use N.A. if not applicable.		
* *Indicates items required for Source Water Assessment*		
** *Indicates additional items required for assessments and Ground Water Rule*		
	(separate multiple entries in field with semi-colon)	Actual, Estimated or Default?
GENERAL INFORMATION		
System Name	Schulte Rd. Warehouse	
System Number	CA3902181	
Source of Information *(well log, DHS/County files, system, etc)*	Various	
Organization Collecting Information *(DHS, County, System, other)*	Quality Service, Inc.	
Date Information Collected/Updated	2/18/2019	
SOURCE IDENTIFICATION		
* Source Name	2017-14900 East Well	(WELL #2)
* DHS Source Identification Number (**FRDS ID No.**)	3902181-002	
DWR Well Log on File? ("YES" or "NO")	YES	
State Well Number (from DWR)	002	
Well Status (Active, Standby, Inactive)	ACTIVE	
SOURCE LOCATION		
Ground Surface Elevation (ft above Mean Sea Level)		
Street Address	14900 W. Schulte Rd.	
Nearest Cross Street	S. Lammers Rd.	
City	Tracy	
County	San Joaquin	
* Neighborhood/Surrounding Area *(see Note 1)*	I, A	
Site plan on file? ("YES" or "NO")		
SANITARY CONDITIONS		
** Distance to closest sewage facilities (ft)	528ft	(On-site domestic)
Distance to Active Wells (ft)	1,000ft +	
Distance to Abandoned Wells (ft)	1,500ft +	Estimated
Distance to Surface Water (ft)	3,000ft +	Actual, canal
** Size of controlled area around well (square feet)	50ft +	
* Type of access control to well site *(fencing, building, etc)*	Fencing, Pump House	
* Surface Seal? (Concrete slab)("YES", "NO" or "UNKNOWN")	YES	
* Dimensions of concrete slab: Length(ft)/ Width(ft)/ Thick(in)	Unknown	
* Within 100 year flood plain? ("YES", "NO" or "UNKNOWN")	NO	
* Drainage away from well? ("YES" or "NO")	YES	
ENCLOSURE/HOUSING		
Enclosure Type *(building, vault, none, etc.)*	Pump House	
Floor material	Cement	
Located in Pit? ("YES" or "NO")	NO	
Pit depth (feet) (if applicable)	N/A	
WELL CONSTRUCTION		
Date drilled	10/23/2017	
Drilling Method	Air Drilling	
Length of Well (feet)	385ft	
Number of pipes	18-20	Estimated
Casing Diameter (inches)	8"	
Casing Material	HSLA Steel, Stainless Perf	
* Total length of perforated interval (ft) (or "UNKNOWN")	12 ft	
* Annular Seal?("YES", "NO" or "UNKNOWN") *(See Note 3)*	YES	
* Length of Annular Seal (ft)	350ft	
Material of Annular Seal *(cement grout, bentonite, etc.)*	Cement	
	(separate multiple entries in field with semi-colon)	Actual, Estimated or Default?

HORIZONTAL WELL DATA SHEET (Page 2 of 2)

Complete as much information as possible. Leave blank if information is not available, use N.A. if not applicable.		
** Indicates items required for Source Water Assessment*		
*** Indicates additional items required for assessments and Ground Water Rule*		
AQUIFER		
* Aquifer Materials *(list all that apply: sand, silt, clay, gravel, rock, fractured rock)*	Sand, clay, gravel	
* Effective porosity (decimal percent) *(default = 0.2)* (or "UNKNOWN")	0.2	Default
* Confining layer (Impervious Strata) above aquifer? ("YES", "NO" or "UNKNOWN")	YES	
Thickness of confining layer, if known (ft)	120'	
Depth to confining layer, if known (ft below ground)	147'	
* Static water level (ft below ground surface)	158ft	
Static water level measurement: Date/Method	12/6/2017	
WELL PRODUCTION		
Well Yield (gpm)	120gpm	
Well Yield Based On (i.e., pump test, etc.)	Pump Test	
Date measured	12/6/2017	
Is the well metered? ("YES" or "NO")	YES	
Production (gallons per year)		
Frequency of Use (hours/year)		
Typical pumping duration (hours/day)		
PUMP		
Make		
Type		
Size (hp)		
* Capacity (gpm)		
Depth to suction intake (ft below ground surface)		
Lubrication Type		
Type of Power: *(i.e., electric, diesel, etc.)*	Electric	
Auxiliary power available? ("YES" or "NO")		
Operation controlled by: *(i.e., level in tank, pressure, etc.)*	Pressure	
Pump to Waste capability? ("YES" or "NO")		
Discharges to: *(i.e., distribution system, storage, etc.)*	Distribution, Storage	
REMARKS AND DEFECTS (use additional sheets as necessary)		
NOTES		
1. Neighborhood/Surrounding Area (list all that apply): A= Agricultural, Ru = Rural, Re = Residential, Co = Commercial, I = Industrial, Mu = Municipal, P = Pristine, O = Other		
2. Conductor Casing - Oversized casing used to stabilize bore hole during well construction. Should be removed during installation of annular seal.		
3. Annular Seal - Seal of grout in the space between the well casing and the wall of the drilled hole. Sometimes called "sanitary seal".		

Schulte Road Warehouse Water System
14900 W. Schulte Rd.
Tracy, CA 95377

Inquiry Number: 5550691.2s
January 31, 2019

EDR Summary Radius Map Report

6 Armstrong Road, 4th floor
Shelton, CT 06484
Toll Free: 800.352.0050
www.edrnet.com

TABLE OF CONTENTS

SECTION	PAGE
Executive Summary	ES1
Overview Map	2
Detail Map	3
Map Findings Summary	4
Map Findings	8
Orphan Summary	315
Government Records Searched/Data Currency Tracking	GR-1

GEOCHECK ADDENDUM

Physical Setting Source Addendum	A-1
Physical Setting Source Summary	A-2
Physical Setting SSURGO Soil Map	A-5
Physical Setting Source Map	A-8
Physical Setting Source Map Findings	A-10
Physical Setting Source Records Searched	PSGR-1

Thank you for your business.
Please contact EDR at 1-800-352-0050
with any questions or comments.

Disclaimer - Copyright and Trademark Notice

This Report contains certain information obtained from a variety of public and other sources reasonably available to Environmental Data Resources, Inc. It cannot be concluded from this Report that coverage information for the target and surrounding properties does not exist from other sources. **NO WARRANTY EXPRESSED OR IMPLIED, IS MADE WHATSOEVER IN CONNECTION WITH THIS REPORT. ENVIRONMENTAL DATA RESOURCES, INC. SPECIFICALLY DISCLAIMS THE MAKING OF ANY SUCH WARRANTIES, INCLUDING WITHOUT LIMITATION, MERCHANTABILITY OR FITNESS FOR A PARTICULAR USE OR PURPOSE. ALL RISK IS ASSUMED BY THE USER. IN NO EVENT SHALL ENVIRONMENTAL DATA RESOURCES, INC. BE LIABLE TO ANYONE, WHETHER ARISING OUT OF ERRORS OR OMISSIONS, NEGLIGENCE, ACCIDENT OR ANY OTHER CAUSE, FOR ANY LOSS OF DAMAGE, INCLUDING, WITHOUT LIMITATION, SPECIAL, INCIDENTAL, CONSEQUENTIAL, OR EXEMPLARY DAMAGES. ANY LIABILITY ON THE PART OF ENVIRONMENTAL DATA RESOURCES, INC. IS STRICTLY LIMITED TO A REFUND OF THE AMOUNT PAID FOR THIS REPORT.** Purchaser accepts this Report "AS IS". Any analyses, estimates, ratings, environmental risk levels or risk codes provided in this Report are provided for illustrative purposes only, and are not intended to provide, nor should they be interpreted as providing any facts regarding, or prediction or forecast of, any environmental risk for any property. Only a Phase I Environmental Site Assessment performed by an environmental professional can provide information regarding the environmental risk for any property. Additionally, the information provided in this Report is not to be construed as legal advice.

Copyright 2018 by Environmental Data Resources, Inc. All rights reserved. Reproduction in any media or format, in whole or in part, of any report or map of Environmental Data Resources, Inc., or its affiliates, is prohibited without prior written permission.

EDR and its logos (including Sanborn and Sanborn Map) are trademarks of Environmental Data Resources, Inc. or its affiliates. All other trademarks used herein are the property of their respective owners.

EXECUTIVE SUMMARY

A search of available environmental records was conducted by Environmental Data Resources, Inc (EDR). The report was designed to assist parties seeking to meet the search requirements of EPA's Standards and Practices for All Appropriate Inquiries (40 CFR Part 312), the ASTM Standard Practice for Environmental Site Assessments (E 1527-13), the ASTM Standard Practice for Environmental Site Assessments for Forestland or Rural Property (E 2247-16), the ASTM Standard Practice for Limited Environmental Due Diligence: Transaction Screen Process (E 1528-14) or custom requirements developed for the evaluation of environmental risk associated with a parcel of real estate.

TARGET PROPERTY INFORMATION

ADDRESS

14900 W. SCHULTE RD.
TRACY, CA 95377

COORDINATES

Latitude (North):	37.7195150 - 37˚ 43' 10.25''
Longitude (West):	121.4938720 - 121˚ 29' 37.93''
Universal Tranverse Mercator:	Zone 10
UTM X (Meters):	632743.2
UTM Y (Meters):	4175558.0
Elevation:	133 ft. above sea level

USGS TOPOGRAPHIC MAP ASSOCIATED WITH TARGET PROPERTY

Target Property:	TP
Source:	U.S. Geological Survey

Target Property:	SW
Source:	U.S. Geological Survey

AERIAL PHOTOGRAPHY IN THIS REPORT

Portions of Photo from:	20140628
Source:	USDA

MAPPED SITES SUMMARY

Target Property Address:
14900 W. SCHULTE RD.
TRACY, CA 95377

Click on Map ID to see full detail.

MAP ID	SITE NAME	ADDRESS	DATABASE ACRONYMS	RELATIVE ELEVATION	DIST (ft. & mi.) DIRECTION
1	14900 WEST SCHULTE R	14900 WEST SCHULTE R	NPDES, CIWQS		TP
A2	TRACY COMBINED CYCLE	14950 W SCHULTE RD	AST	Lower	1 ft.
A3	ALTAGAS SAN JOAQUIN	14950 W SCHULTE RD	FINDS, ECHO	Lower	1 ft.
A4	SCHULTE LAMMERS TOWE	14940 WEST SCHULTE R	NPDES	Lower	1 ft.
A5	PG&E: SCHULTE SUBSTA	14950 W SCHULTE RD	CERS	Lower	1 ft.
A6	G W F ENERGY LLC	14950 W SCHULTE RD	HAZNET	Lower	1 ft.
A7	GWF ENERGY, LLC-TRAC	14950 W. SCHULTE ROA	FINDS, ECHO	Lower	1 ft.
A8	GWF ENERGY LLC TRACY	14950 W SCHULTE ROAD	CERS HAZ WASTE, CERS TANKS, EMI, HAZNET, NPDES,...	Lower	1 ft.
A9	GWF ENERGY, LLC-TRAC	14950 W. SCHULTE ROA	ICIS, US AIRS, FINDS	Lower	1 ft.
B10	TRACY YOUTH SPORTS P	15178 SCHULTE ROAD	CPS-SLIC, CERS	Higher	586, 0.111, NW
B11	FAA - ANTENNAE FARM	15178 W SCHULTE RD	UST	Higher	586, 0.111, NW
C12	THERMAL ENERGY DEVEL	14800 W SCHULTE RD	CERS HAZ WASTE, CERS TANKS, CERS	Lower	706, 0.134, NE
C13	THERMAL ENERGY DEVEL	14800 W SCHULTE RD	AST	Lower	706, 0.134, NE
D14	OWENS-BROCKWAY GLASS	14700 W SCHULTE RD	RCRA-LQG, LUST, CPS-SLIC, HIST UST, TRIS, ICIS, US...	Lower	1444, 0.273, ENE
D15	OWENS-BROCKWAY GLASS	14700 SHULTE RD W	CPS-SLIC	Lower	1444, 0.273, ENE

EXECUTIVE SUMMARY

TARGET PROPERTY SEARCH RESULTS

The target property was identified in the following records. For more information on this property see page 8 of the attached EDR Radius Map report:

Site	Database(s)	EPA ID
14900 WEST SCHULTE R 14900 WEST SCHULTE R TRACY, CA 95377	NPDES Facility Status: Active CIWQS	N/A

SURROUNDING SITES: SEARCH RESULTS

Surrounding sites were identified in the following databases.

Elevations have been determined from the USGS Digital Elevation Model and should be evaluated on a relative (not an absolute) basis. Relative elevation information between sites of close proximity should be field verified. Sites with an elevation equal to or higher than the target property have been differentiated below from sites with an elevation lower than the target property.
Page numbers and map identification numbers refer to the EDR Radius Map report where detailed data on individual sites can be reviewed.

Sites listed in ***bold italics*** are in multiple databases.

Unmappable (orphan) sites are not considered in the foregoing analysis.

STANDARD ENVIRONMENTAL RECORDS

State and tribal leaking storage tank lists

LUST: A review of the LUST list, as provided by EDR, has revealed that there is 1 LUST site within approximately 0.5 miles of the target property.

Lower Elevation	Address	Direction / Distance	Map ID	Page
OWENS-BROCKWAY GLASS	***14700 W SCHULTE RD***	***ENE 1/4 - 1/2 (0.273 mi.)***	***D14***	***11***
Database: LUST REG 5, Date of Government Version: 07/01/2008 Database: LUST, Date of Government Version: 12/10/2018 Status: Completed - Case Closed Status: Case Closed Global Id: T0607700651				

CPS-SLIC: A review of the CPS-SLIC list, as provided by EDR, has revealed that there are 3 CPS-SLIC sites within approximately 0.5 miles of the target property.

Equal/Higher Elevation	Address	Direction / Distance	Map ID	Page
TRACY YOUTH SPORTS P	***15178 SCHULTE ROAD***	***NW 0 - 1/8 (0.111 mi.)***	***B10***	***10***
Database: CPS-SLIC, Date of Government Version: 12/10/2018 Facility Status: Completed - Case Closed				

Global Id: SL0607797298

Lower Elevation	Address	Direction / Distance	Map ID	Page
OWENS-BROCKWAY GLASS	***14700 W SCHULTE RD***	***ENE 1/4 - 1/2 (0.273 mi.)***	***D14***	***11***
Database: CPS-SLIC, Date of Government Version: 12/10/2018 Facility Status: Open - Inactive Global Id: SL0607719504				
OWENS-BROCKWAY GLASS	14700 SHULTE RD W	ENE 1/4 - 1/2 (0.273 mi.)	D15	12
Database: SLIC REG 5, Date of Government Version: 04/01/2005				

State and tribal registered storage tank lists

UST: A review of the UST list, as provided by EDR, has revealed that there is 1 UST site within approximately 0.25 miles of the target property.

Equal/Higher Elevation	Address	Direction / Distance	Map ID	Page
FAA - ANTENNAE FARM	15178 W SCHULTE RD	NW 0 - 1/8 (0.111 mi.)	B11	10
Database: UST SAN JOAQUIN, Date of Government Version: 06/22/2018 Facility Id: FA0017909 Tank Status: 02 - Inactive, non-billable				

AST: A review of the AST list, as provided by EDR, has revealed that there are 2 AST sites within approximately 0.25 miles of the target property.

Lower Elevation	Address	Direction / Distance	Map ID	Page
TRACY COMBINED CYCLE	14950 W SCHULTE RD	0 - 1/8 (0.000 mi.)	A2	8
Database: AST, Date of Government Version: 07/06/2016				
THERMAL ENERGY DEVEL	14800 W SCHULTE RD	NE 1/8 - 1/4 (0.134 mi.)	C13	10
Database: AST, Date of Government Version: 07/06/2016				

ADDITIONAL ENVIRONMENTAL RECORDS

Local Lists of Hazardous waste / Contaminated Sites

CERS HAZ WASTE: A review of the CERS HAZ WASTE list, as provided by EDR, and dated 10/22/2018 has revealed that there are 2 CERS HAZ WASTE sites within approximately 0.25 miles of the target property.

Lower Elevation	Address	Direction / Distance	Map ID	Page
GWF ENERGY LLC TRACY	***14950 W SCHULTE ROAD***	***0 - 1/8 (0.000 mi.)***	***A8***	***9***
THERMAL ENERGY DEVEL	***14800 W SCHULTE RD***	***NE 1/8 - 1/4 (0.134 mi.)***	***C12***	***10***

EXECUTIVE SUMMARY

Local Lists of Registered Storage Tanks

CERS TANKS: A review of the CERS TANKS list, as provided by EDR, and dated 10/22/2018 has revealed that there are 2 CERS TANKS sites within approximately 0.25 miles of the target property.

Lower Elevation	Address	Direction / Distance	Map ID	Page
GWF ENERGY LLC TRACY	***14950 W SCHULTE ROAD***	***0 - 1/8 (0.000 mi.)***	***A8***	***9***
THERMAL ENERGY DEVEL	***14800 W SCHULTE RD***	***NE 1/8 - 1/4 (0.134 mi.)***	***C12***	***10***

Other Ascertainable Records

ICIS: A review of the ICIS list, as provided by EDR, and dated 11/18/2016 has revealed that there is 1 ICIS site within approximately 0.001 miles of the target property.

Lower Elevation	Address	Direction / Distance	Map ID	Page
GWF ENERGY, LLC-TRAC	***14950 W. SCHULTE ROA***	***0 - 1/8 (0.000 mi.)***	***A9***	***9***
FRS ID:: 110018862337				

US AIRS: A review of the US AIRS list, as provided by EDR, has revealed that there is 1 US AIRS site within approximately 0.001 miles of the target property.

Lower Elevation	Address	Direction / Distance	Map ID	Page
GWF ENERGY, LLC-TRAC	***14950 W. SCHULTE ROA***	***0 - 1/8 (0.000 mi.)***	***A9***	***9***
Database: US AIRS (AFS), Date of Government Version: 10/12/2016				
EPA plant ID:: 110018862337				

FINDS: A review of the FINDS list, as provided by EDR, and dated 11/15/2018 has revealed that there are 3 FINDS sites within approximately 0.001 miles of the target property.

Lower Elevation	Address	Direction / Distance	Map ID	Page
ALTAGAS SAN JOAQUIN	***14950 W SCHULTE RD***	***0 - 1/8 (0.000 mi.)***	***A3***	***8***
Registry ID:: 110070096155				
GWF ENERGY, LLC-TRAC	***14950 W. SCHULTE ROA***	***0 - 1/8 (0.000 mi.)***	***A7***	***9***
Registry ID:: 110018862337				
GWF ENERGY, LLC-TRAC	***14950 W. SCHULTE ROA***	***0 - 1/8 (0.000 mi.)***	***A9***	***9***
Registry ID:: 110055817647				

EXECUTIVE SUMMARY

ECHO: A review of the ECHO list, as provided by EDR, and dated 09/02/2018 has revealed that there are 2 ECHO sites within approximately 0.001 miles of the target property.

Lower Elevation	Address	Direction / Distance	Map ID	Page
ALTAGAS SAN JOAQUIN	***14950 W SCHULTE RD***	***0 - 1/8 (0.000 mi.)***	***A3***	***8***
Registry ID: 110070096155				
GWF ENERGY, LLC-TRAC	***14950 W. SCHULTE ROA***	***0 - 1/8 (0.000 mi.)***	***A7***	***9***
Registry ID: 110018862337				

EMI: A review of the EMI list, as provided by EDR, and dated 12/31/2017 has revealed that there is 1 EMI site within approximately 0.001 miles of the target property.

Lower Elevation	Address	Direction / Distance	Map ID	Page
GWF ENERGY LLC TRACY	***14950 W SCHULTE ROAD***	***0 - 1/8 (0.000 mi.)***	***A8***	***9***
Facility Id: 4597				

HAZNET: A review of the HAZNET list, as provided by EDR, and dated 12/31/2017 has revealed that there are 2 HAZNET sites within approximately 0.001 miles of the target property.

Lower Elevation	Address	Direction / Distance	Map ID	Page
G W F ENERGY LLC	14950 W SCHULTE RD	0 - 1/8 (0.000 mi.)	A6	9
GEPAID: CAL000258560				
GWF ENERGY LLC TRACY	***14950 W SCHULTE ROAD***	***0 - 1/8 (0.000 mi.)***	***A8***	***9***
GEPAID: CAL000414217				

HIST CORTESE: A review of the HIST CORTESE list, as provided by EDR, and dated 04/01/2001 has revealed that there is 1 HIST CORTESE site within approximately 0.5 miles of the target property.

Lower Elevation	Address	Direction / Distance	Map ID	Page
OWENS-BROCKWAY GLASS	***14700 W SCHULTE RD***	***ENE 1/4 - 1/2 (0.273 mi.)***	***D14***	***11***
Reg Id: 390822				

NPDES: A review of the NPDES list, as provided by EDR, and dated 11/12/2018 has revealed that there are 2 NPDES sites within approximately 0.001 miles of the target property.

Lower Elevation	Address	Direction / Distance	Map ID	Page
SCHULTE LAMMERS TOWE	14940 WEST SCHULTE R	0 - 1/8 (0.000 mi.)	A4	8
GWF ENERGY LLC TRACY	***14950 W SCHULTE ROAD***	***0 - 1/8 (0.000 mi.)***	***A8***	***9***
Facility Status: Active				
Facility Status: Terminated				

EXECUTIVE SUMMARY

CIWQS: A review of the CIWQS list, as provided by EDR, and dated 12/03/2018 has revealed that there is 1 CIWQS site within approximately 0.001 miles of the target property.

Lower Elevation	Address	Direction / Distance	Map ID	Page
GWF ENERGY LLC TRACY	***14950 W SCHULTE ROAD***	***0 - 1/8 (0.000 mi.)***	***A8***	***9***

CERS: A review of the CERS list, as provided by EDR, and dated 10/22/2018 has revealed that there are 2 CERS sites within approximately 0.001 miles of the target property.

Lower Elevation	Address	Direction / Distance	Map ID	Page
PG&E: SCHULTE SUBSTA	14950 W SCHULTE RD	0 - 1/8 (0.000 mi.)	A5	8
GWF ENERGY LLC TRACY	***14950 W SCHULTE ROAD***	***0 - 1/8 (0.000 mi.)***	***A8***	***9***

Count: 0 records.

ORPHAN SUMMARY

City	EDR ID	Site Name	Site Address	Zip	Database(s)
		NO SITES FOUND			

OVERVIEW MAP - 5550691.2S

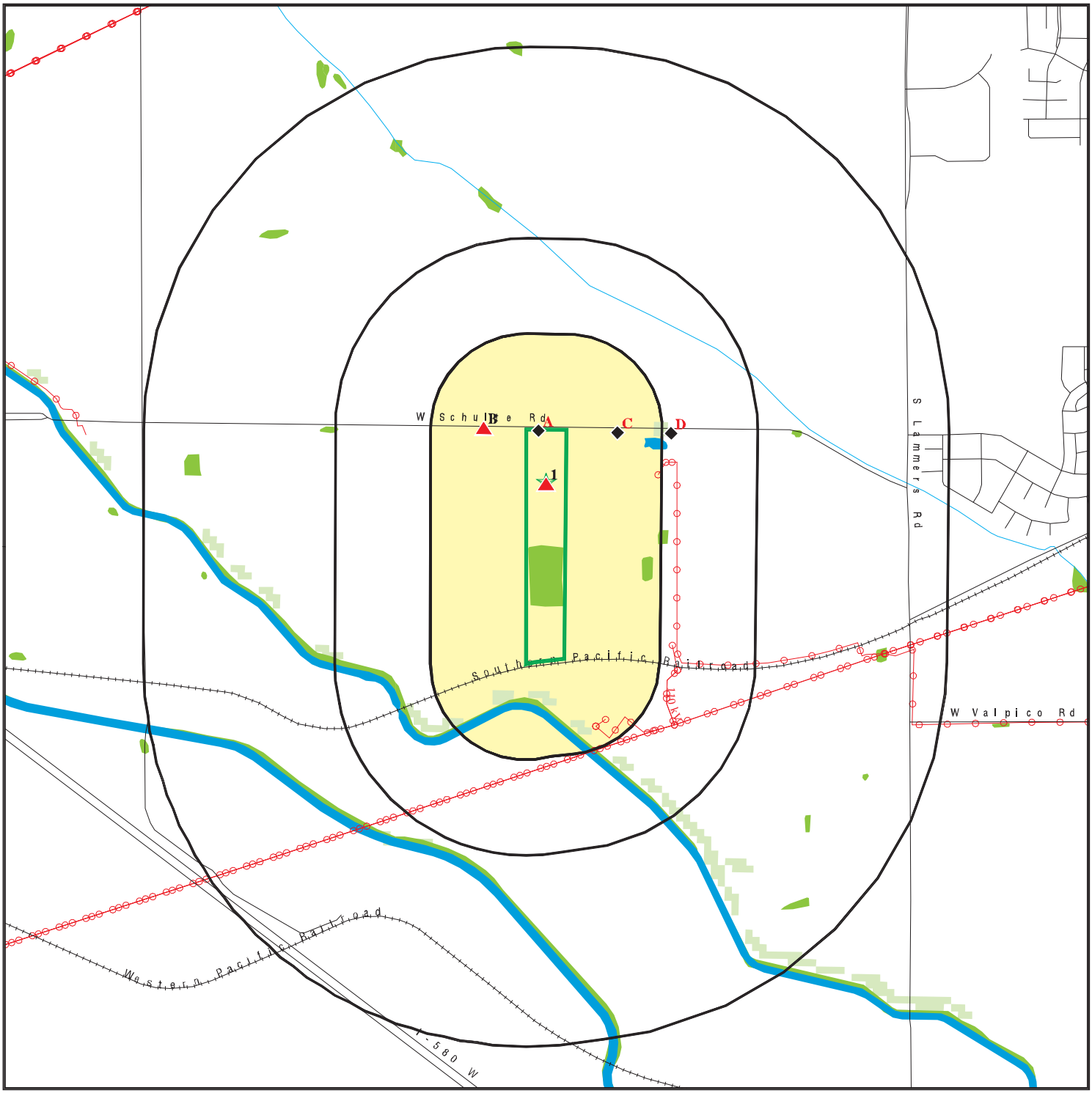

0 1/4 1/2 1 Miles

- Target Property
- Sites at elevations higher than or equal to the target property
- Sites at elevations lower than the target property
- Manufactured Gas Plants
- National Priority List Sites
- Dept. Defense Sites
- Indian Reservations BIA
- Power transmission lines
- 100-year flood zone
- 500-year flood zone
- National Wetland Inventory
- State Wetlands
- Areas of Concern

This report includes Interactive Map Layers to display and/or hide map information. The legend includes only those icons for the default map view.

SITE NAME: Schulte Road Warehouse Water System ADDRESS: 14900 W. Schulte Rd. Tracy CA 95377 LAT/LONG: 37.719515 / 121.493872	CLIENT: Quality Service, Inc. CONTACT: Keven Jones INQUIRY #: 5550691.2s DATE: January 31, 2019 8:07 pm

Copyright © 2019 EDR, Inc. © 2015 TomTom Rel. 2015.

DETAIL MAP - 5550691.2S

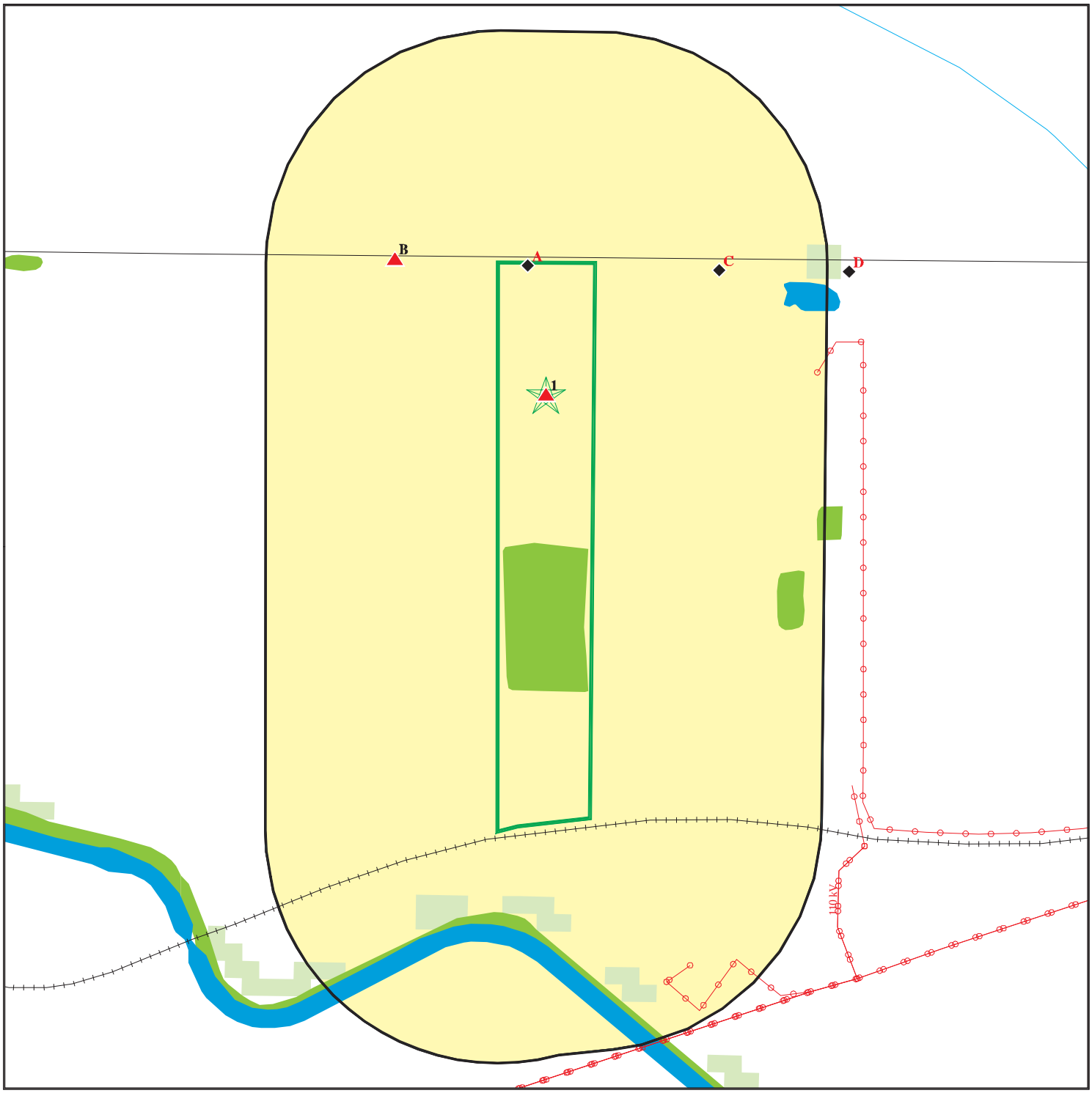

0 1/8 1/4 1/2 Miles

- Target Property
- Sites at elevations higher than or equal to the target property
- Sites at elevations lower than the target property
- Manufactured Gas Plants
- Sensitive Receptors
- National Priority List Sites
- Dept. Defense Sites
- Indian Reservations BIA
- Power transmission lines
- 100-year flood zone
- 500-year flood zone
- National Wetland Inventory
- State Wetlands
- Areas of Concern

This report includes Interactive Map Layers to display and/or hide map information. The legend includes only those icons for the default map view.

SITE NAME:	Schulte Road Warehouse Water System	CLIENT:	Quality Service, Inc.
ADDRESS:	14900 W. Schulte Rd. Tracy CA 95377	CONTACT:	Keven Jones
		INQUIRY #:	5550691.2s
LAT/LONG:	37.719515 / 121.493872	DATE:	January 31, 2019 8:08 pm

Copyright © 2019 EDR, Inc. © 2015 TomTom Rel. 2015.

MAP FINDINGS SUMMARY

Database	Search Distance (Miles)	Target Property	< 1/8	1/8 - 1/4	1/4 - 1/2	1/2 - 1	> 1	Total Plotted
STANDARD ENVIRONMENTAL RECORDS								
Federal NPL site list								
NPL	1.000		0	0	0	0	NR	0
Proposed NPL	1.000		0	0	0	0	NR	0
NPL LIENS	0.001		0	NR	NR	NR	NR	0
Federal Delisted NPL site list								
Delisted NPL	1.000		0	0	0	0	NR	0
Federal CERCLIS list								
FEDERAL FACILITY	0.500		0	0	0	NR	NR	0
SEMS	0.500		0	0	0	NR	NR	0
Federal CERCLIS NFRAP site list								
SEMS-ARCHIVE	0.500		0	0	0	NR	NR	0
Federal RCRA CORRACTS facilities list								
CORRACTS	1.000		0	0	0	0	NR	0
Federal RCRA non-CORRACTS TSD facilities list								
RCRA-TSDF	0.500		0	0	0	NR	NR	0
Federal RCRA generators list								
RCRA-LQG	0.250		0	0	NR	NR	NR	0
RCRA-SQG	0.250		0	0	NR	NR	NR	0
RCRA-CESQG	0.250		0	0	NR	NR	NR	0
Federal institutional controls / engineering controls registries								
LUCIS	0.500		0	0	0	NR	NR	0
US ENG CONTROLS	0.500		0	0	0	NR	NR	0
US INST CONTROL	0.500		0	0	0	NR	NR	0
Federal ERNS list								
ERNS	0.001		0	NR	NR	NR	NR	0
State- and tribal - equivalent NPL								
RESPONSE	1.000		0	0	0	0	NR	0
State- and tribal - equivalent CERCLIS								
ENVIROSTOR	1.000		0	0	0	0	NR	0
State and tribal landfill and/or solid waste disposal site lists								
SWF/LF	0.500		0	0	0	NR	NR	0
State and tribal leaking storage tank lists								
LUST	0.500		0	0	1	NR	NR	1

MAP FINDINGS SUMMARY

Database	Search Distance (Miles)	Target Property	< 1/8	1/8 - 1/4	1/4 - 1/2	1/2 - 1	> 1	Total Plotted
INDIAN LUST	0.500		0	0	0	NR	NR	0
CPS-SLIC	0.500		1	0	2	NR	NR	3
State and tribal registered storage tank lists								
FEMA UST	0.250		0	0	NR	NR	NR	0
UST	0.250		1	0	NR	NR	NR	1
AST	0.250		1	1	NR	NR	NR	2
INDIAN UST	0.250		0	0	NR	NR	NR	0
State and tribal voluntary cleanup sites								
VCP	0.500		0	0	0	NR	NR	0
INDIAN VCP	0.500		0	0	0	NR	NR	0
State and tribal Brownfields sites								
BROWNFIELDS	0.500		0	0	0	NR	NR	0
ADDITIONAL ENVIRONMENTAL RECORDS								
Local Brownfield lists								
US BROWNFIELDS	0.500		0	0	0	NR	NR	0
Local Lists of Landfill / Solid Waste Disposal Sites								
WMUDS/SWAT	0.500		0	0	0	NR	NR	0
SWRCY	0.500		0	0	0	NR	NR	0
HAULERS	0.001		0	NR	NR	NR	NR	0
INDIAN ODI	0.500		0	0	0	NR	NR	0
ODI	0.500		0	0	0	NR	NR	0
DEBRIS REGION 9	0.500		0	0	0	NR	NR	0
IHS OPEN DUMPS	0.500		0	0	0	NR	NR	0
Local Lists of Hazardous waste / Contaminated Sites								
US HIST CDL	0.001		0	NR	NR	NR	NR	0
HIST Cal-Sites	1.000		0	0	0	0	NR	0
SCH	0.250		0	0	NR	NR	NR	0
CDL	0.001		0	NR	NR	NR	NR	0
Toxic Pits	1.000		0	0	0	0	NR	0
CERS HAZ WASTE	0.250		1	1	NR	NR	NR	2
US CDL	0.001		0	NR	NR	NR	NR	0
Local Lists of Registered Storage Tanks								
SWEEPS UST	0.250		0	0	NR	NR	NR	0
HIST UST	0.250		0	0	NR	NR	NR	0
CERS TANKS	0.250		1	1	NR	NR	NR	2
CA FID UST	0.250		0	0	NR	NR	NR	0
Local Land Records								
LIENS	0.001		0	NR	NR	NR	NR	0
LIENS 2	0.001		0	NR	NR	NR	NR	0

MAP FINDINGS SUMMARY

Database	Search Distance (Miles)	Target Property	< 1/8	1/8 - 1/4	1/4 - 1/2	1/2 - 1	> 1	Total Plotted
DEED	0.500		0	0	0	NR	NR	0
Records of Emergency Release Reports								
HMIRS	0.001		0	NR	NR	NR	NR	0
CHMIRS	0.001		0	NR	NR	NR	NR	0
LDS	0.001		0	NR	NR	NR	NR	0
MCS	0.001		0	NR	NR	NR	NR	0
SPILLS 90	0.001		0	NR	NR	NR	NR	0
Other Ascertainable Records								
RCRA NonGen / NLR	0.250		0	0	NR	NR	NR	0
FUDS	1.000		0	0	0	0	NR	0
DOD	1.000		0	0	0	0	NR	0
SCRD DRYCLEANERS	0.500		0	0	0	NR	NR	0
US FIN ASSUR	0.001		0	NR	NR	NR	NR	0
EPA WATCH LIST	0.001		0	NR	NR	NR	NR	0
2020 COR ACTION	0.250		0	0	NR	NR	NR	0
TSCA	0.001		0	NR	NR	NR	NR	0
TRIS	0.001		0	NR	NR	NR	NR	0
SSTS	0.001		0	NR	NR	NR	NR	0
ROD	1.000		0	0	0	0	NR	0
RMP	0.001		0	NR	NR	NR	NR	0
RAATS	0.001		0	NR	NR	NR	NR	0
PRP	0.001		0	NR	NR	NR	NR	0
PADS	0.001		0	NR	NR	NR	NR	0
ICIS	0.001		1	NR	NR	NR	NR	1
FTTS	0.001		0	NR	NR	NR	NR	0
MLTS	0.001		0	NR	NR	NR	NR	0
COAL ASH DOE	0.001		0	NR	NR	NR	NR	0
COAL ASH EPA	0.500		0	0	0	NR	NR	0
PCB TRANSFORMER	0.001		0	NR	NR	NR	NR	0
RADINFO	0.001		0	NR	NR	NR	NR	0
HIST FTTS	0.001		0	NR	NR	NR	NR	0
DOT OPS	0.001		0	NR	NR	NR	NR	0
CONSENT	1.000		0	0	0	0	NR	0
INDIAN RESERV	0.001		0	NR	NR	NR	NR	0
FUSRAP	1.000		0	0	0	0	NR	0
UMTRA	0.500		0	0	0	NR	NR	0
LEAD SMELTERS	0.001		0	NR	NR	NR	NR	0
US AIRS	0.001		1	NR	NR	NR	NR	1
US MINES	0.250		0	0	NR	NR	NR	0
ABANDONED MINES	0.001		0	NR	NR	NR	NR	0
FINDS	0.001		3	NR	NR	NR	NR	3
ECHO	0.001		2	NR	NR	NR	NR	2
DOCKET HWC	0.001		0	NR	NR	NR	NR	0
UXO	1.000		0	0	0	0	NR	0
FUELS PROGRAM	0.250		0	0	NR	NR	NR	0
CA BOND EXP. PLAN	1.000		0	0	0	0	NR	0
Cortese	0.500		0	0	0	NR	NR	0
CUPA Listings	0.250		0	0	NR	NR	NR	0
DRYCLEANERS	0.250		0	0	NR	NR	NR	0

MAP FINDINGS SUMMARY

Database	Search Distance (Miles)	Target Property	< 1/8	1/8 - 1/4	1/4 - 1/2	1/2 - 1	> 1	Total Plotted
EMI	0.001		1	NR	NR	NR	NR	1
ENF	0.001		0	NR	NR	NR	NR	0
Financial Assurance	0.001		0	NR	NR	NR	NR	0
HAZNET	0.001		2	NR	NR	NR	NR	2
ICE	0.001		0	NR	NR	NR	NR	0
HIST CORTESE	0.500		0	0	1	NR	NR	1
HWP	1.000		0	0	0	0	NR	0
HWT	0.250		0	0	NR	NR	NR	0
MINES	0.001		0	NR	NR	NR	NR	0
MWMP	0.250		0	0	NR	NR	NR	0
NPDES	0.001	1	2	NR	NR	NR	NR	3
PEST LIC	0.001		0	NR	NR	NR	NR	0
PROC	0.500		0	0	0	NR	NR	0
Notify 65	1.000		0	0	0	0	NR	0
UIC	0.001		0	NR	NR	NR	NR	0
UIC GEO	0.001		0	NR	NR	NR	NR	0
WASTEWATER PITS	0.500		0	0	0	NR	NR	0
WDS	0.001		0	NR	NR	NR	NR	0
MILITARY PRIV SITES	0.001		0	NR	NR	NR	NR	0
PROJECT	0.001		0	NR	NR	NR	NR	0
WDR	0.001		0	NR	NR	NR	NR	0
CIWQS	0.001	1	1	NR	NR	NR	NR	2
CERS	0.001		2	NR	NR	NR	NR	2
WIP	0.250		0	0	NR	NR	NR	0
NON-CASE INFO	0.001		0	NR	NR	NR	NR	0
OTHER OIL GAS	0.001		0	NR	NR	NR	NR	0
PROD WATER PONDS	0.001		0	NR	NR	NR	NR	0
SAMPLING POINT	0.001		0	NR	NR	NR	NR	0
WELL STIM PROJ	0.001		0	NR	NR	NR	NR	0
EDR HIGH RISK HISTORICAL RECORDS								
EDR Exclusive Records								
EDR MGP	1.000		0	0	0	0	NR	0
EDR Hist Auto	0.125		0	NR	NR	NR	NR	0
EDR Hist Cleaner	0.125		0	NR	NR	NR	NR	0
EDR RECOVERED GOVERNMENT ARCHIVES								
Exclusive Recovered Govt. Archives								
RGA LF	0.001		0	NR	NR	NR	NR	0
RGA LUST	0.001		0	NR	NR	NR	NR	0
- Totals --		2	20	3	4	0	0	29

NOTES:

TP = Target Property

NR = Not Requested at this Search Distance

Sites may be listed in more than one database

Map ID / Direction / Distance / Elevation	Site	Database(s)	EDR ID Number / EPA ID Number
1 **Target Property** **Actual: 133 ft.**	**14900 WEST SCHULTE ROAD** **14900 WEST SCHULTE ROAD** **TRACY, CA 95377** **NPDES** Click here for full text details Facility Status: Active	**NPDES** **CIWQS**	**S119083639** **N/A**
A2 **< 1/8** **1 ft.** **Relative: Lower**	**TRACY COMBINED CYCLE POWER PLANT** **14950 W SCHULTE RD** **TRACY, CA 95377** Click here for full text details	**AST**	**A100425367** **N/A**
A3 **< 1/8** **1 ft.** **Relative: Lower**	**ALTAGAS SAN JOAQUIN ENERGY TRACY COMBINED CYCLE PO** **14950 W SCHULTE RD** **TRACY, CA 94509** Click here for full text details **FINDS** Registry ID:: 110070096155 **ECHO** Registry ID: 110070096155	**FINDS** **ECHO**	**1023699056** **N/A**
A4 **< 1/8** **1 ft.** **Relative: Lower**	**SCHULTE LAMMERS TOWERS AND RECONDUCTORING** **14940 WEST SCHULTE ROAD** **TRACY, CA 95377** Click here for full text details	**NPDES**	**S122249183** **N/A**
A5 **< 1/8** **1 ft.** **Relative: Lower**	**PG&E: SCHULTE SUBSTATION** **14950 W SCHULTE RD** **TRACY, CA 95377** Click here for full text details	**CERS**	**S121745105** **N/A**

A6
< 1/8
1 ft.

G W F ENERGY LLC | **HAZNET** | **S113121836**
14950 W SCHULTE RD | **N/A**
TRACY, CA 95377

Relative: Lower

Click here for full text details

HAZNET
GEPAID: CAL000258560

A7
< 1/8
1 ft.

GWF ENERGY, LLC-TRACY PEAKER PLANT | **FINDS** | **1016111169**
14950 W. SCHULTE ROAD | **ECHO** | **N/A**
TRACY, CA 95377

Relative: Lower

Click here for full text details

FINDS
Registry ID:: 110018862337

ECHO
Registry ID: 110018862337

A8
< 1/8
1 ft.

GWF ENERGY LLC TRACY COMBINED CYCLE POWER PLANT | **CERS HAZ WASTE** | **S106093824**
14950 W SCHULTE ROAD | **CERS TANKS** | **N/A**
TRACY, CA 95377 | **EMI**
HAZNET
NPDES
CIWQS
CERS

Relative: Lower

Click here for full text details

EMI
Facility Id: 4597

HAZNET
GEPAID: CAL000414217

NPDES
Facility Status: Active
Facility Status: Terminated

A9
< 1/8
1 ft.

GWF ENERGY, LLC-TRACY PEAKER PLANT | **ICIS** | **1007729329**
14950 W. SCHULTE ROAD | **US AIRS** | **N/A**
TRACY, CA 64565 | **FINDS**

Relative: Lower

Click here for full text details

ICIS
FRS ID:: 110018862337

US AIRS

GWF ENERGY, LLC-TRACY PEAKER PLANT (Continued) **1007729329**

EPA plant ID:: 110018862337

FINDS

Registry ID:: 110055817647

B10 **TRACY YOUTH SPORTS PARK** **CPS-SLIC** **S108937588**
NW **15178 SCHULTE ROAD** **CERS** **N/A**
< 1/8 **TRACY, CA**
0.111 mi.
586 ft.

Click here for full text details

Relative: Higher

CPS-SLIC

Facility Status: Completed - Case Closed
Global Id: SL0607797298

Click here to access the California GeoTracker records for this facility

---

B11 **FAA - ANTENNAE FARM** **UST** **U004066913**
NW **15178 W SCHULTE RD** **N/A**
< 1/8 **TRACY, CA 95376**
0.111 mi.
586 ft.

Click here for full text details

Relative: Higher

UST

Tank Status: 02 - Inactive, non-billable
Facility Id: FA0017909

C12 **THERMAL ENERGY DEVELOP PSHIP** **CERS HAZ WASTE** **S121748289**
NE **14800 W SCHULTE RD** **CERS TANKS** **N/A**
1/8-1/4 **TRACY, CA 95377** **CERS**
0.134 mi.
706 ft.

Click here for full text details

Relative: Lower

C13 **THERMAL ENERGY DEVELOP PSHIP** **AST** **A100425266**
NE **14800 W SCHULTE RD** **N/A**
1/8-1/4 **TRACY, CA 95377**
0.134 mi.
706 ft.

Click here for full text details

Relative: Lower

D14
ENE
1/4-1/2
0.273 mi.
1444 ft.

Relative:
Lower

OWENS-BROCKWAY GLASS CONTAINER INC PLANT #22
14700 W SCHULTE RD
TRACY, CA 95377

Click here for full text details

RCRA-LQG **1000319784**
LUST **95376WNSLL14700**
CPS-SLIC
HIST UST
TRIS
ICIS
US AIRS
HIST CORTESE
WDS
CERS

RCRA-LQG
EPA Id: CAD009146929

LUST
Status: Case Closed
Status: Completed - Case Closed
Global Id: T0607700651

CPS-SLIC
Facility Status: Open - Inactive
Global Id: SL0607719504

Click here to access the California GeoTracker records for this facility

HIST UST
Facility Id: 00000002264

TRIS
TRIS ID: 95376WNSLL14700

ICIS
FRS ID:: 110000485421

US AIRS
EPA plant ID:: 110000485421

HIST CORTESE
Reg Id: 390822

WDS
Facility Id: 5B392023001
Facility Status: Active - Any facility with a continuous or seasonal discharge that is under Waste Discharge Requirements.

Map ID Direction Distance Elevation	Site	Database(s)	EDR ID Number EPA ID Number
D15 ENE 1/4-1/2 0.273 mi. 1444 ft. Relative: Lower	**OWENS-BROCKWAY GLASS CONTAINER FACILITY** 14700 SHULTE RD W TRACY, CA Click here for full text details**	**CPS-SLIC**	**S106230473 N/A**

GOVERNMENT RECORDS SEARCHED / DATA CURRENCY TRACKING

St	Acronym	Full Name	Government Agency	Gov Date	Arvl. Date	Active Date
CA	AST	Aboveground Petroleum Storage Tank Facilities	California Environmental Protection Agency	07/06/2016	07/12/2016	09/19/2016
CA	BROWNFIELDS	Considered Brownfieds Sites Listing	State Water Resources Control Board	09/24/2018	09/25/2018	10/15/2018
CA	CA BOND EXP. PLAN	Bond Expenditure Plan	Department of Health Services	01/01/1989	07/27/1994	08/02/1994
CA	CA FID UST	Facility Inventory Database	California Environmental Protection Agency	10/31/1994	09/05/1995	09/29/1995
CA	CDL	Clandestine Drug Labs	Department of Toxic Substances Control	12/31/2017	06/12/2018	08/06/2018
CA	CERS	CalEPA Regulated Site Portal Data	California Environmental Protection Agency	10/22/2018	10/23/2018	11/30/2018
CA	CERS HAZ WASTE	CERS HAZ WASTE	CalEPA	10/22/2018	10/23/2018	11/30/2018
CA	CERS TANKS	California Environmental Reporting System (CERS) Tanks	California Environmental Protection Agency	10/22/2018	10/23/2018	11/30/2018
CA	CHMIRS	California Hazardous Material Incident Report System	Office of Emergency Services	04/06/2018	04/24/2018	06/14/2018
CA	CIWQS	California Integrated Water Quality System	State Water Resources Control Board	12/03/2018	12/04/2018	01/11/2019
CA	CORTESE	"Cortese" Hazardous Waste & Substances Sites List	CAL EPA/Office of Emergency Information	09/24/2018	09/25/2018	10/16/2018
CA	CPS-SLIC	Statewide SLIC Cases (GEOTRACKER)	State Water Resources Control Board	12/10/2018	12/11/2018	01/15/2019
CA	CUPA LIVERMORE-PLEASANTON	CUPA Facility Listing	Livermore-Pleasanton Fire Department	08/28/2018	08/30/2018	11/01/2018
CA	CUPA SAN FRANCISCO CO	CUPA Facility Listing	San Francisco County Department of Environmen	09/11/2018	09/12/2018	09/19/2018
CA	DEED	Deed Restriction Listing	DTSC and SWRCB	12/03/2018	12/05/2018	01/11/2019
CA	DRYCLEAN AVAQMD	Antelope Valley Air Quality Management District Drycleaner L	Antelope Valley Air Quality Management Distri	11/13/2018	12/04/2018	01/15/2019
CA	DRYCLEAN SOUTH COAST	South Coast Air Quality Management District Drycleaner Listi	South Coast Air Quality Management District	10/04/2018	10/05/2018	11/01/2018
CA	DRYCLEANERS	Cleaner Facilities	Department of Toxic Substance Control	08/30/2018	09/27/2018	11/01/2018
CA	EMI	Emissions Inventory Data	California Air Resources Board	12/31/2017	06/20/2018	08/06/2018
CA	ENF	Enforcement Action Listing	State Water Resoruces Control Board	11/01/2018	11/02/2018	12/13/2018
CA	ENVIROSTOR	EnviroStor Database	Department of Toxic Substances Control	10/29/2018	10/30/2018	12/13/2018
CA	Financial Assurance 1	Financial Assurance Information Listing	Department of Toxic Substances Control	10/19/2018	10/23/2018	11/30/2018
CA	Financial Assurance 2	Financial Assurance Information Listing	California Integrated Waste Management Board	11/18/2018	11/19/2018	01/11/2019
CA	HAULERS	Registered Waste Tire Haulers Listing	Integrated Waste Management Board	09/26/2018	09/28/2018	11/01/2018
CA	HAZNET	Facility and Manifest Data	California Environmental Protection Agency	12/31/2017	10/10/2018	11/16/2018
CA	HIST CAL-SITES	Calsites Database	Department of Toxic Substance Control	08/08/2005	08/03/2006	08/24/2006
CA	HIST CORTESE	Hazardous Waste & Substance Site List	Department of Toxic Substances Control	04/01/2001	01/22/2009	04/08/2009
CA	HIST UST	Hazardous Substance Storage Container Database	State Water Resources Control Board	10/15/1990	01/25/1991	02/12/1991
CA	HWP	EnviroStor Permitted Facilities Listing	Department of Toxic Substances Control	11/19/2018	11/19/2018	01/11/2019
CA	HWT	Registered Hazardous Waste Transporter Database	Department of Toxic Substances Control	10/09/2018	10/10/2018	11/16/2018
CA	ICE	ICE	Department of Toxic Subsances Control	11/19/2018	11/19/2018	01/11/2019
CA	LDS	Land Disposal Sites Listing (GEOTRACKER)	State Water Qualilty Control Board	12/10/2018	12/11/2018	01/15/2019
CA	LIENS	Environmental Liens Listing	Department of Toxic Substances Control	11/29/2018	12/04/2018	01/11/2019
CA	LUST	Leaking Underground Fuel Tank Report (GEOTRACKER)	State Water Resources Control Board	12/10/2018	12/11/2018	01/15/2019
CA	LUST REG 1	Active Toxic Site Investigation	California Regional Water Quality Control Boa	02/01/2001	02/28/2001	03/29/2001
CA	LUST REG 2	Fuel Leak List	California Regional Water Quality Control Boa	09/30/2004	10/20/2004	11/19/2004
CA	LUST REG 3	Leaking Underground Storage Tank Database	California Regional Water Quality Control Boa	05/19/2003	05/19/2003	06/02/2003
CA	LUST REG 4	Underground Storage Tank Leak List	California Regional Water Quality Control Boa	09/07/2004	09/07/2004	10/12/2004
CA	LUST REG 5	Leaking Underground Storage Tank Database	California Regional Water Quality Control Boa	07/01/2008	07/22/2008	07/31/2008
CA	LUST REG 6L	Leaking Underground Storage Tank Case Listing	California Regional Water Quality Control Boa	09/09/2003	09/10/2003	10/07/2003
CA	LUST REG 6V	Leaking Underground Storage Tank Case Listing	California Regional Water Quality Control Boa	06/07/2005	06/07/2005	06/29/2005
CA	LUST REG 7	Leaking Underground Storage Tank Case Listing	California Regional Water Quality Control Boa	02/26/2004	02/26/2004	03/24/2004
CA	LUST REG 8	Leaking Underground Storage Tanks	California Regional Water Quality Control Boa	02/14/2005	02/15/2005	03/28/2005
CA	LUST REG 9	Leaking Underground Storage Tank Report	California Regional Water Quality Control Boa	03/01/2001	04/23/2001	05/21/2001
CA	MCS	Military Cleanup Sites Listing (GEOTRACKER)	State Water Resources Control Board	12/10/2018	12/11/2018	01/15/2019
CA	MILITARY PRIV SITES	Military Privatized Sites (GEOTRACKER)	State Water Resources Control Board	12/10/2018	12/11/2018	01/15/2019
CA	MILITARY UST SITES	Military UST Sites (GEOTRACKER)	State Water Resources Control Board	12/10/2018	12/11/2018	01/15/2019

GOVERNMENT RECORDS SEARCHED / DATA CURRENCY TRACKING

St	Acronym	Full Name	Government Agency	Gov Date	Arvl. Date	Active Date
CA	MINES	Mines Site Location Listing	Department of Conservation	12/10/2018	12/12/2018	01/15/2019
CA	MWMP	Medical Waste Management Program Listing	Department of Public Health	11/09/2018	12/05/2018	01/11/2019
CA	NON-CASE INFO	Non-Case Information Sites (GEOTRACKER)	State Water Resources Control Board	12/10/2018	12/11/2018	01/15/2019
CA	NOTIFY 65	Proposition 65 Records	State Water Resources Control Board	09/19/2018	09/20/2018	10/19/2018
CA	NPDES	NPDES Permits Listing	State Water Resources Control Board	11/12/2018	11/14/2018	12/13/2018
CA	OTHER OIL GAS	Other Oil & Gas Projects Sites (GEOTRACKER)	State Water Resources Control Board	12/10/2018	12/11/2018	01/15/2019
CA	PEST LIC	Pesticide Regulation Licenses Listing	Department of Pesticide Regulation	12/03/2018	12/05/2018	01/11/2019
CA	PROC	Certified Processors Database	Department of Conservation	12/10/2018	12/12/2018	01/15/2019
CA	PROD WATER PONDS	Produced Water Ponds Sites (GEOTRACKER)	State Water Resources Control Board	12/10/2018	12/11/2018	01/15/2019
CA	PROJECT	Project Sites (GEOTRACKER)	State Water Resources Control Board	12/10/2018	12/11/2018	01/15/2019
CA	RESPONSE	State Response Sites	Department of Toxic Substances Control	10/29/2018	10/30/2018	12/13/2018
CA	RGA LF	Recovered Government Archive Solid Waste Facilities List	Department of Resources Recycling and Recover		07/01/2013	01/13/2014
CA	RGA LUST	Recovered Government Archive Leaking Underground Storage Tan	State Water Resources Control Board		07/01/2013	12/30/2013
CA	SAMPLING POINT	Sampling Point ? Public Sites (GEOTRACKER)	State Water Resources Control Board	12/10/2018	12/11/2018	01/15/2019
CA	SAN FRANCISCO AST	Aboveground Storage Tank Site Listing	San Francisco County Department of Public Hea	09/11/2018	09/12/2018	10/11/2018
CA	SCH	School Property Evaluation Program	Department of Toxic Substances Control	10/29/2018	10/30/2018	12/13/2018
CA	SLIC REG 1	Active Toxic Site Investigations	California Regional Water Quality Control Boa	04/03/2003	04/07/2003	04/25/2003
CA	SLIC REG 2	Spills, Leaks, Investigation & Cleanup Cost Recovery Listing	Regional Water Quality Control Board San Fran	09/30/2004	10/20/2004	11/19/2004
CA	SLIC REG 3	Spills, Leaks, Investigation & Cleanup Cost Recovery Listing	California Regional Water Quality Control Boa	05/18/2006	05/18/2006	06/15/2006
CA	SLIC REG 4	Spills, Leaks, Investigation & Cleanup Cost Recovery Listing	Region Water Quality Control Board Los Angele	11/17/2004	11/18/2004	01/04/2005
CA	SLIC REG 5	Spills, Leaks, Investigation & Cleanup Cost Recovery Listing	Regional Water Quality Control Board Central	04/01/2005	04/05/2005	04/21/2005
CA	SLIC REG 6L	SLIC Sites	California Regional Water Quality Control Boa	09/07/2004	09/07/2004	10/12/2004
CA	SLIC REG 6V	Spills, Leaks, Investigation & Cleanup Cost Recovery Listing	Regional Water Quality Control Board, Victorv	05/24/2005	05/25/2005	06/16/2005
CA	SLIC REG 7	SLIC List	California Regional Quality Control Board, Co	11/24/2004	11/29/2004	01/04/2005
CA	SLIC REG 8	Spills, Leaks, Investigation & Cleanup Cost Recovery Listing	California Region Water Quality Control Board	04/03/2008	04/03/2008	04/14/2008
CA	SLIC REG 9	Spills, Leaks, Investigation & Cleanup Cost Recovery Listing	California Regional Water Quality Control Boa	09/10/2007	09/11/2007	09/28/2007
CA	SPILLS 90	SPILLS90 data from FirstSearch	FirstSearch	06/06/2012	01/03/2013	02/22/2013
CA	SWEEPS UST	SWEEPS UST Listing	State Water Resources Control Board	06/01/1994	07/07/2005	08/11/2005
CA	SWF/LF (SWIS)	Solid Waste Information System	Department of Resources Recycling and Recover	11/12/2018	11/14/2018	12/13/2018
CA	SWRCY	Recycler Database	Department of Conservation	12/10/2018	12/12/2018	01/15/2019
CA	TOXIC PITS	Toxic Pits Cleanup Act Sites	State Water Resources Control Board	07/01/1995	08/30/1995	09/26/1995
CA	UIC	UIC Listing	Deaprtment of Conservation	04/27/2018	06/13/2018	07/17/2018
CA	UIC GEO	Underground Injection Control Sites (GEOTRACKER)	State Water Resource Control Board	12/10/2018	12/11/2018	01/15/2019
CA	UST	Active UST Facilities	SWRCB	12/10/2018	12/11/2018	01/15/2019
CA	UST CLOSURE	Proposed Closure of Underground Storage Tank (UST) Cases	State Water Resources Control Board	12/10/2018	12/12/2018	01/16/2019
CA	UST MENDOCINO	Mendocino County UST Database	Department of Public Health	12/04/2018	12/06/2018	12/14/2018
CA	VCP	Voluntary Cleanup Program Properties	Department of Toxic Substances Control	10/29/2018	10/30/2018	12/13/2018
CA	WASTEWATER PITS	Oil Wastewater Pits Listing	RWQCB, Central Valley Region	05/08/2018	07/11/2018	09/13/2018
CA	WDR	Waste Discharge Requirements Listing	State Water Resources Control Board	12/10/2018	12/12/2018	01/18/2019
CA	WDS	Waste Discharge System	State Water Resources Control Board	06/19/2007	06/20/2007	06/29/2007
CA	WELL STIM PROJ	Well Stimulation Project (GEOTRACKER)	State Water Resources Control Board	12/10/2018	12/11/2018	01/15/2019
CA	WIP	Well Investigation Program Case List	Los Angeles Water Quality Control Board	07/03/2009	07/21/2009	08/03/2009
CA	WMUDS/SWAT	Waste Management Unit Database	State Water Resources Control Board	04/01/2000	04/10/2000	05/10/2000
US	2020 COR ACTION	2020 Corrective Action Program List	Environmental Protection Agency	09/30/2017	05/08/2018	07/20/2018
US	ABANDONED MINES	Abandoned Mines	Department of Interior	09/10/2018	09/11/2018	09/14/2018
US	BRS	Biennial Reporting System	EPA/NTIS	12/31/2015	02/22/2017	09/28/2017
US	COAL ASH DOE	Steam-Electric Plant Operation Data	Department of Energy	12/31/2005	08/07/2009	10/22/2009

GOVERNMENT RECORDS SEARCHED / DATA CURRENCY TRACKING

St	Acronym	Full Name	Government Agency	Gov Date	Arvl. Date	Active Date
US	COAL ASH EPA	Coal Combustion Residues Surface Impoundments List	Environmental Protection Agency	07/01/2014	09/10/2014	10/20/2014
US	CONSENT	Superfund (CERCLA) Consent Decrees	Department of Justice, Consent Decree Library	09/30/2018	10/12/2018	12/07/2018
US	CORRACTS	Corrective Action Report	EPA	03/01/2018	03/28/2018	06/22/2018
US	DEBRIS REGION 9	Torres Martinez Reservation Illegal Dump Site Locations	EPA, Region 9	01/12/2009	05/07/2009	09/21/2009
US	DOCKET HWC	Hazardous Waste Compliance Docket Listing	Environmental Protection Agency	05/31/2018	07/26/2018	10/05/2018
US	DOD	Department of Defense Sites	USGS	12/31/2005	11/10/2006	01/11/2007
US	DOT OPS	Incident and Accident Data	Department of Transporation, Office of Pipeli	10/01/2018	10/30/2018	01/18/2019
US	Delisted NPL	National Priority List Deletions	EPA	12/12/2018	12/28/2018	01/11/2019
US	ECHO	Enforcement & Compliance History Information	Environmental Protection Agency	09/02/2018	09/05/2018	09/14/2018
US	EDR Hist Auto	EDR Exclusive Historical Auto Stations	EDR, Inc.			
US	EDR Hist Cleaner	EDR Exclusive Historical Cleaners	EDR, Inc.			
US	EDR MGP	EDR Proprietary Manufactured Gas Plants	EDR, Inc.			
US	EPA WATCH LIST	EPA WATCH LIST	Environmental Protection Agency	08/30/2013	03/21/2014	06/17/2014
US	ERNS	Emergency Response Notification System	National Response Center, United States Coast	09/24/2018	09/25/2018	11/09/2018
US	FEDERAL FACILITY	Federal Facility Site Information listing	Environmental Protection Agency	11/07/2016	01/05/2017	04/07/2017
US	FEDLAND	Federal and Indian Lands	U.S. Geological Survey	12/31/2005	02/06/2006	01/11/2007
US	FEMA UST	Underground Storage Tank Listing	FEMA	05/15/2017	05/30/2017	10/13/2017
US	FINDS	Facility Index System/Facility Registry System	EPA	11/15/2018	12/05/2018	01/11/2019
US	FTTS	FIFRA/ TSCA Tracking System - FIFRA (Federal Insecticide, Fu	EPA/Office of Prevention, Pesticides and Toxi	04/09/2009	04/16/2009	05/11/2009
US	FTTS INSP	FIFRA/ TSCA Tracking System - FIFRA (Federal Insecticide, Fu	EPA	04/09/2009	04/16/2009	05/11/2009
US	FUDS	Formerly Used Defense Sites	U.S. Army Corps of Engineers	01/31/2015	07/08/2015	10/13/2015
US	FUELS PROGRAM	EPA Fuels Program Registered Listing	EPA	08/22/2018	08/22/2018	10/05/2018
US	FUSRAP	Formerly Utilized Sites Remedial Action Program	Department of Energy	08/08/2017	09/11/2018	09/14/2018
US	HIST FTTS	FIFRA/TSCA Tracking System Administrative Case Listing	Environmental Protection Agency	10/19/2006	03/01/2007	04/10/2007
US	HIST FTTS INSP	FIFRA/TSCA Tracking System Inspection & Enforcement Case Lis	Environmental Protection Agency	10/19/2006	03/01/2007	04/10/2007
US	HMIRS	Hazardous Materials Information Reporting System	U.S. Department of Transportation	03/26/2018	03/27/2018	06/08/2018
US	ICIS	Integrated Compliance Information System	Environmental Protection Agency	11/18/2016	11/23/2016	02/10/2017
US	IHS OPEN DUMPS	Open Dumps on Indian Land	Department of Health & Human Serivces, Indian	04/01/2014	08/06/2014	01/29/2015
US	INDIAN LUST R1	Leaking Underground Storage Tanks on Indian Land	EPA Region 1	04/13/2018	05/18/2018	07/20/2018
US	INDIAN LUST R10	Leaking Underground Storage Tanks on Indian Land	EPA Region 10	04/12/2018	05/18/2018	07/20/2018
US	INDIAN LUST R4	Leaking Underground Storage Tanks on Indian Land	EPA Region 4	05/08/2018	05/18/2018	07/20/2018
US	INDIAN LUST R5	Leaking Underground Storage Tanks on Indian Land	EPA, Region 5	04/12/2018	05/18/2018	07/20/2018
US	INDIAN LUST R6	Leaking Underground Storage Tanks on Indian Land	EPA Region 6	04/01/2018	05/18/2018	07/20/2018
US	INDIAN LUST R7	Leaking Underground Storage Tanks on Indian Land	EPA Region 7	04/24/2018	05/18/2018	07/20/2018
US	INDIAN LUST R8	Leaking Underground Storage Tanks on Indian Land	EPA Region 8	04/25/2018	05/18/2018	07/20/2018
US	INDIAN LUST R9	Leaking Underground Storage Tanks on Indian Land	Environmental Protection Agency	04/10/2018	05/18/2018	07/20/2018
US	INDIAN ODI	Report on the Status of Open Dumps on Indian Lands	Environmental Protection Agency	12/31/1998	12/03/2007	01/24/2008
US	INDIAN RESERV	Indian Reservations	USGS	12/31/2014	07/14/2015	01/10/2017
US	INDIAN UST R1	Underground Storage Tanks on Indian Land	EPA, Region 1	04/13/2018	05/18/2018	07/20/2018
US	INDIAN UST R10	Underground Storage Tanks on Indian Land	EPA Region 10	04/12/2018	05/18/2018	07/20/2018
US	INDIAN UST R4	Underground Storage Tanks on Indian Land	EPA Region 4	05/08/2018	05/18/2018	07/20/2018
US	INDIAN UST R5	Underground Storage Tanks on Indian Land	EPA Region 5	04/12/2018	05/18/2018	07/20/2018
US	INDIAN UST R6	Underground Storage Tanks on Indian Land	EPA Region 6	04/01/2018	05/18/2018	07/20/2018
US	INDIAN UST R7	Underground Storage Tanks on Indian Land	EPA Region 7	04/24/2018	05/18/2018	07/20/2018
US	INDIAN UST R8	Underground Storage Tanks on Indian Land	EPA Region 8	04/25/2018	05/18/2018	07/20/2018
US	INDIAN UST R9	Underground Storage Tanks on Indian Land	EPA Region 9	04/10/2018	05/18/2018	07/20/2018
US	INDIAN VCP R1	Voluntary Cleanup Priority Listing	EPA, Region 1	07/27/2015	09/29/2015	02/18/2016

GOVERNMENT RECORDS SEARCHED / DATA CURRENCY TRACKING

St	Acronym	Full Name	Government Agency	Gov Date	Arvl. Date	Active Date
US	INDIAN VCP R7	Voluntary Cleanup Priority Lisitng	EPA, Region 7	03/20/2008	04/22/2008	05/19/2008
US	LEAD SMELTER 1	Lead Smelter Sites	Environmental Protection Agency	12/12/2018	12/28/2018	01/11/2019
US	LEAD SMELTER 2	Lead Smelter Sites	American Journal of Public Health	04/05/2001	10/27/2010	12/02/2010
US	LIENS 2	CERCLA Lien Information	Environmental Protection Agency	12/12/2018	12/28/2018	01/11/2019
US	LUCIS	Land Use Control Information System	Department of the Navy	10/17/2018	10/25/2018	12/07/2018
US	MLTS	Material Licensing Tracking System	Nuclear Regulatory Commission	08/30/2016	09/08/2016	10/21/2016
US	NPL	National Priority List	EPA	12/12/2018	12/28/2018	01/11/2019
US	NPL LIENS	Federal Superfund Liens	EPA	10/15/1991	02/02/1994	03/30/1994
US	ODI	Open Dump Inventory	Environmental Protection Agency	06/30/1985	08/09/2004	09/17/2004
US	PADS	PCB Activity Database System	EPA	09/14/2018	10/11/2018	12/07/2018
US	PCB TRANSFORMER	PCB Transformer Registration Database	Environmental Protection Agency	05/24/2017	11/30/2017	12/15/2017
US	PRP	Potentially Responsible Parties	EPA	08/13/2018	10/04/2018	11/09/2018
US	Proposed NPL	Proposed National Priority List Sites	EPA	12/12/2018	12/28/2018	01/11/2019
US	RAATS	RCRA Administrative Action Tracking System	EPA	04/17/1995	07/03/1995	08/07/1995
US	RADINFO	Radiation Information Database	Environmental Protection Agency	10/02/2018	10/03/2018	11/09/2018
US	RCRA NonGen / NLR	RCRA - Non Generators / No Longer Regulated	Environmental Protection Agency	03/01/2018	03/28/2018	06/22/2018
US	RCRA-CESQG	RCRA - Conditionally Exempt Small Quantity Generators	Environmental Protection Agency	03/01/2018	03/28/2018	06/22/2018
US	RCRA-LQG	RCRA - Large Quantity Generators	Environmental Protection Agency	03/01/2018	03/28/2018	06/22/2018
US	RCRA-SQG	RCRA - Small Quantity Generators	Environmental Protection Agency	03/01/2018	03/28/2018	06/22/2018
US	RCRA-TSDF	RCRA - Treatment, Storage and Disposal	Environmental Protection Agency	03/01/2018	03/28/2018	06/22/2018
US	RMP	Risk Management Plans	Environmental Protection Agency	10/26/2018	11/06/2018	01/11/2019
US	ROD	Records Of Decision	EPA	12/12/2018	12/28/2018	01/11/2019
US	SCRD DRYCLEANERS	State Coalition for Remediation of Drycleaners Listing	Environmental Protection Agency	01/01/2017	02/03/2017	04/07/2017
US	SEMS	Superfund Enterprise Management System	EPA	12/12/2018	12/28/2018	01/11/2019
US	SEMS-ARCHIVE	Superfund Enterprise Management System Archive	EPA	12/13/2018	12/28/2018	01/11/2019
US	SSTS	Section 7 Tracking Systems	EPA	12/31/2009	12/10/2010	02/25/2011
US	TRIS	Toxic Chemical Release Inventory System	EPA	12/31/2016	01/10/2018	01/12/2018
US	TSCA	Toxic Substances Control Act	EPA	12/31/2016	06/21/2017	01/05/2018
US	UMTRA	Uranium Mill Tailings Sites	Department of Energy	06/23/2017	10/11/2017	11/03/2017
US	US AIRS (AFS)	Aerometric Information Retrieval System Facility Subsystem (	EPA	10/12/2016	10/26/2016	02/03/2017
US	US AIRS MINOR	Air Facility System Data	EPA	10/12/2016	10/26/2016	02/03/2017
US	US BROWNFIELDS	A Listing of Brownfields Sites	Environmental Protection Agency	12/17/2018	12/18/2018	01/11/2019
US	US CDL	Clandestine Drug Labs	Drug Enforcement Administration	09/21/2018	09/21/2018	11/09/2018
US	US ENG CONTROLS	Engineering Controls Sites List	Environmental Protection Agency	07/31/2018	08/28/2018	09/14/2018
US	US FIN ASSUR	Financial Assurance Information	Environmental Protection Agency	08/31/2018	09/25/2018	11/09/2018
US	US HIST CDL	National Clandestine Laboratory Register	Drug Enforcement Administration	09/21/2018	09/21/2018	11/09/2018
US	US INST CONTROL	Sites with Institutional Controls	Environmental Protection Agency	07/31/2018	08/28/2018	09/14/2018
US	US MINES	Mines Master Index File	Department of Labor, Mine Safety and Health A	08/01/2018	08/29/2018	10/05/2018
US	US MINES 2	Ferrous and Nonferrous Metal Mines Database Listing	USGS	12/05/2005	02/29/2008	04/18/2008
US	US MINES 3	Active Mines & Mineral Plants Database Listing	USGS	04/14/2011	06/08/2011	09/13/2011
US	UXO	Unexploded Ordnance Sites	Department of Defense	09/30/2017	06/19/2018	09/14/2018

GOVERNMENT RECORDS SEARCHED / DATA CURRENCY TRACKING

St	Acronym	Full Name	Government Agency	Gov Date	Arvl. Date	Active Date
CT	CT MANIFEST	Hazardous Waste Manifest Data	Department of Energy & Environmental Protecti	11/12/2018	11/14/2018	12/04/2018
NJ	NJ MANIFEST	Manifest Information	Department of Environmental Protection	12/31/2017	07/13/2018	08/01/2018
NY	NY MANIFEST	Facility and Manifest Data	Department of Environmental Conservation	10/01/2018	10/31/2018	12/20/2018
PA	PA MANIFEST	Manifest Information	Department of Environmental Protection	12/31/2017	10/23/2018	11/27/2018
RI	RI MANIFEST	Manifest information	Department of Environmental Management	12/31/2017	02/23/2018	04/09/2018
WI	WI MANIFEST	Manifest Information	Department of Natural Resources	12/31/2017	06/15/2018	07/09/2018
US	AHA Hospitals	Sensitive Receptor: AHA Hospitals	American Hospital Association, Inc.			
US	Medical Centers	Sensitive Receptor: Medical Centers	Centers for Medicare & Medicaid Services			
US	Nursing Homes	Sensitive Receptor: Nursing Homes	National Institutes of Health			
US	Public Schools	Sensitive Receptor: Public Schools	National Center for Education Statistics			
US	Private Schools	Sensitive Receptor: Private Schools	National Center for Education Statistics			
CA	Daycare Centers	Sensitive Receptor: Licensed Facilities	Department of Social Services			
US	Flood Zones	100-year and 500-year flood zones	Emergency Management Agency (FEMA)			
US	NWI	National Wetlands Inventory	U.S. Fish and Wildlife Service			
CA	State Wetlands	Wetland Inventory	Department of Fish & Game			
US	Topographic Map		U.S. Geological Survey			
US	Oil/Gas Pipelines		PennWell Corporation			
US	Electric Power Transmission Line Data		PennWell Corporation			

STREET AND ADDRESS INFORMATION

© 2015 TomTom North America, Inc. All rights reserved. This material is proprietary and the subject of copyright protection and other intellectual property rights owned by or licensed to Tele Atlas North America, Inc. The use of this material is subject to the terms of a license agreement. You will be held liable for any unauthorized copying or disclosure of this material.

GEOCHECK ®- PHYSICAL SETTING SOURCE ADDENDUM

TARGET PROPERTY ADDRESS

SCHULTE ROAD WAREHOUSE WATER SYSTEM
14900 W. SCHULTE RD.
TRACY, CA 95377

TARGET PROPERTY COORDINATES

Latitude (North):	37.719515 - 37˚ 43’ 10.25’’
Longitude (West):	121.493872 - 121˚ 29’ 37.94’’
Universal Tranverse Mercator:	Zone 10
UTM X (Meters):	632743.2
UTM Y (Meters):	4175558.0
Elevation:	133 ft. above sea level

USGS TOPOGRAPHIC MAP

Target Property Map:	5640426 TRACY, CA
Version Date:	2012
Southwest Map:	5640068 MIDWAY, CA
Version Date:	2012

EDR’s GeoCheck Physical Setting Source Addendum is provided to assist the environmental professional in forming an opinion about the impact of potential contaminant migration.

Assessment of the impact of contaminant migration generally has two principle investigative components:

1. Groundwater flow direction, and
2. Groundwater flow velocity.

Groundwater flow direction may be impacted by surface topography, hydrology, hydrogeology, characteristics of the soil, and nearby wells. Groundwater flow velocity is generally impacted by the nature of the geologic strata.

GEOCHECK® - PHYSICAL SETTING SOURCE SUMMARY

GROUNDWATER FLOW DIRECTION INFORMATION

Groundwater flow direction for a particular site is best determined by a qualified environmental professional using site-specific well data. If such data is not reasonably ascertainable, it may be necessary to rely on other sources of information, such as surface topographic information, hydrologic information, hydrogeologic data collected on nearby properties, and regional groundwater flow information (from deep aquifers).

TOPOGRAPHIC INFORMATION

Surface topography may be indicative of the direction of surficial groundwater flow. This information can be used to assist the environmental professional in forming an opinion about the impact of nearby contaminated properties or, should contamination exist on the target property, what downgradient sites might be impacted.

TARGET PROPERTY TOPOGRAPHY

General Topographic Gradient: General NE

SURROUNDING TOPOGRAPHY: ELEVATION PROFILES

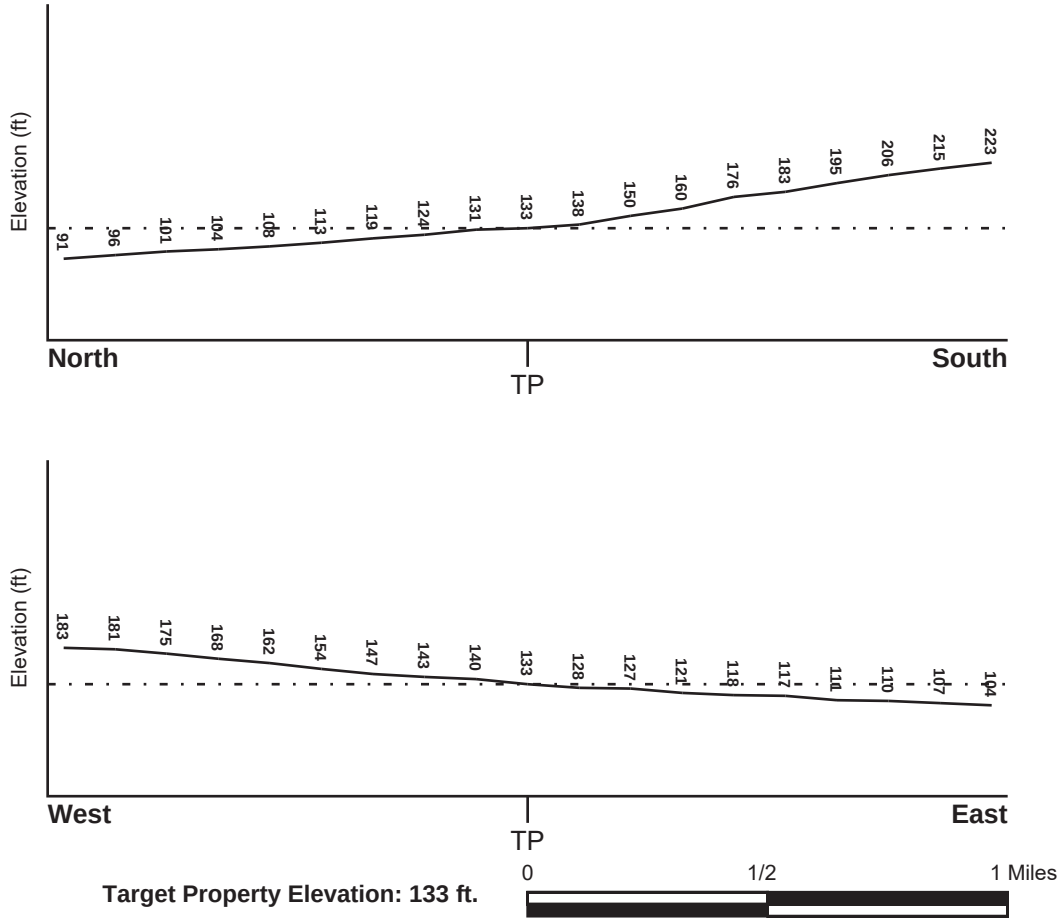

Source: Topography has been determined from the USGS 7.5' Digital Elevation Model and should be evaluated on a relative (not an absolute) basis. Relative elevation information between sites of close proximity should be field verified.

GEOCHECK® - PHYSICAL SETTING SOURCE SUMMARY

HYDROLOGIC INFORMATION

Surface water can act as a hydrologic barrier to groundwater flow. Such hydrologic information can be used to assist the environmental professional in forming an opinion about the impact of nearby contaminated properties or, should contamination exist on the target property, what downgradient sites might be impacted.

Refer to the Physical Setting Source Map following this summary for hydrologic information (major waterways and bodies of water).

FEMA FLOOD ZONE

Flood Plain Panel at Target Property	FEMA Source Type
0602990705A	FEMA Q3 Flood data

Additional Panels in search area:	FEMA Source Type
06001C0400G	FEMA FIRM Flood data
06077C0725F	FEMA FIRM Flood data

NATIONAL WETLAND INVENTORY

NWI Quad at Target Property	NWI Electronic Data Coverage
TRACY	YES - refer to the Overview Map and Detail Map

HYDROGEOLOGIC INFORMATION

Hydrogeologic information obtained by installation of wells on a specific site can often be an indicator of groundwater flow direction in the immediate area. Such hydrogeologic information can be used to assist the environmental professional in forming an opinion about the impact of nearby contaminated properties or, should contamination exist on the target property, what downgradient sites might be impacted.

Site-Specific Hydrogeological Data*:

Search Radius:	1.25 miles
Status:	Not found

AQUIFLOW®

Search Radius: 1.000 Mile.

EDR has developed the AQUIFLOW Information System to provide data on the general direction of groundwater flow at specific points. EDR has reviewed reports submitted by environmental professionals to regulatory authorities at select sites and has extracted the date of the report, groundwater flow direction as determined hydrogeologically, and the depth to water table.

MAP ID	LOCATION FROM TP	GENERAL DIRECTION GROUNDWATER FLOW
Not Reported		

* ©1996 Site-specific hydrogeological data gathered by CERCLIS Alerts, Inc., Bainbridge Island, WA. All rights reserved. All of the information and opinions presented are those of the cited EPA report(s), which were completed under a Comprehensive Environmental Response Compensation and Liability Information System (CERCLIS) investigation.

GEOCHECK® - PHYSICAL SETTING SOURCE SUMMARY

GROUNDWATER FLOW VELOCITY INFORMATION

Groundwater flow velocity information for a particular site is best determined by a qualified environmental professional using site specific geologic and soil strata data. If such data are not reasonably ascertainable, it may be necessary to rely on other sources of information, including geologic age identification, rock stratigraphic unit and soil characteristics data collected on nearby properties and regional soil information. In general, contaminant plumes move more quickly through sandy-gravelly types of soils than silty-clayey types of soils.

GEOLOGIC INFORMATION IN GENERAL AREA OF TARGET PROPERTY

Geologic information can be used by the environmental professional in forming an opinion about the relative speed at which contaminant migration may be occurring.

ROCK STRATIGRAPHIC UNIT

Era:	Cenozoic
System:	Quaternary
Series:	Quaternary
Code:	Q *(decoded above as Era, System & Series)*

GEOLOGIC AGE IDENTIFICATION

Category: Stratifed Sequence

Geologic Age and Rock Stratigraphic Unit Source: P.G. Schruben, R.E. Arndt and W.J. Bawiec, Geology of the Conterminous U.S. at 1:2,500,000 Scale - a digital representation of the 1974 P.B. King and H.M. Beikman Map, USGS Digital Data Series DDS - 11 (1994).

SSURGO SOIL MAP - 5550691.2s

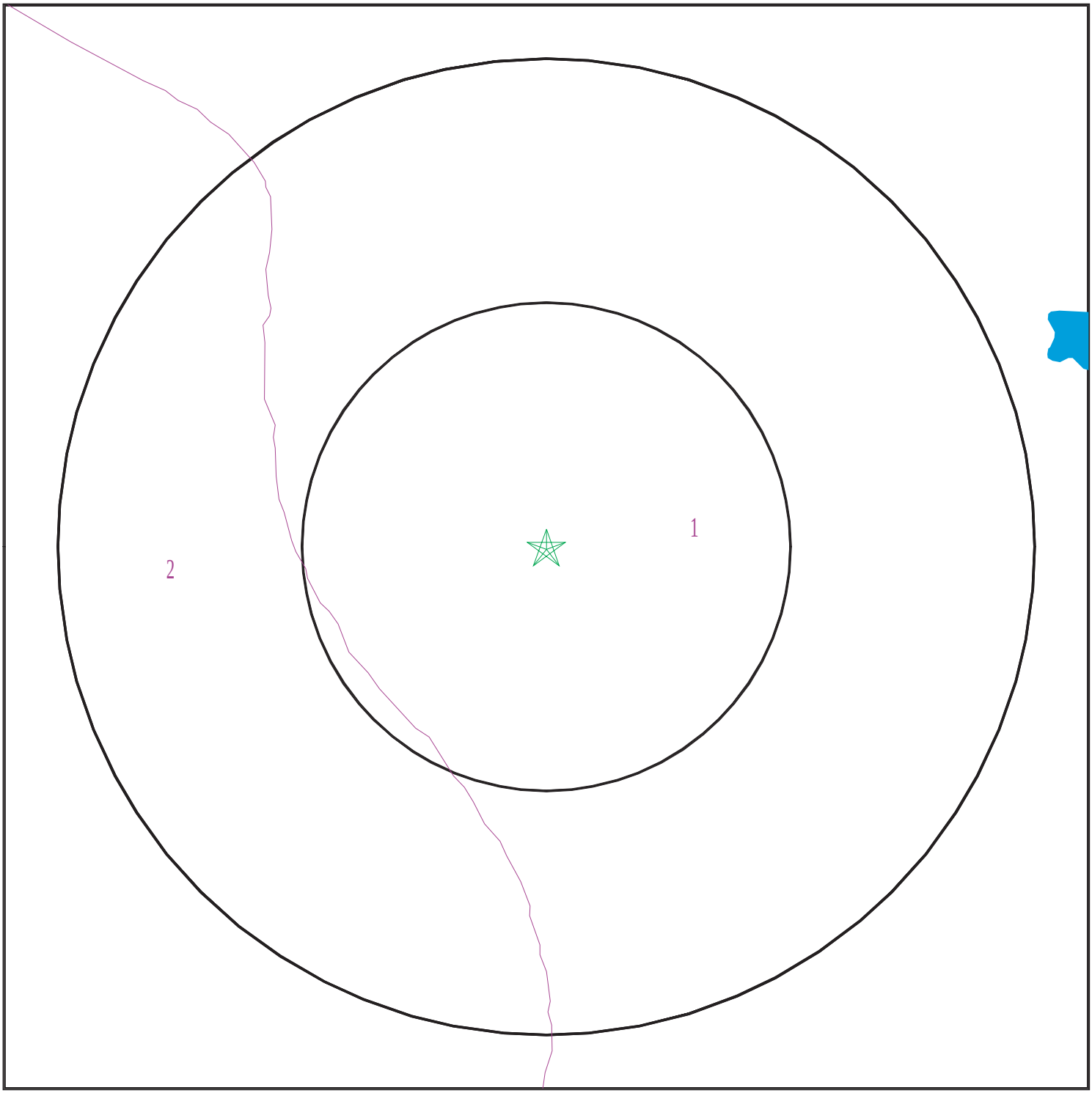

Target Property
SSURGO Soil
Water

0 1/16 1/8 1/4 Miles

N

SITE NAME:	Schulte Road Warehouse Water System	CLIENT:	Quality Service, Inc.
ADDRESS:	14900 W. Schulte Rd. Tracy CA 95377	CONTACT:	Keven Jones
		INQUIRY #:	5550691.2s
LAT/LONG:	37.719515 / 121.493872	DATE:	January 31, 2019 8:09 pm

Copyright © 2019 EDR, Inc. © 2015 TomTom Rel. 2015.

GEOCHECK® - PHYSICAL SETTING SOURCE SUMMARY

DOMINANT SOIL COMPOSITION IN GENERAL AREA OF TARGET PROPERTY

The U.S. Department of Agriculture's (USDA) Soil Conservation Service (SCS) leads the National Cooperative Soil Survey (NCSS) and is responsible for collecting, storing, maintaining and distributing soil survey information for privately owned lands in the United States. A soil map in a soil survey is a representation of soil patterns in a landscape. The following information is based on Soil Conservation Service SSURGO data.

Soil Map ID: 1

Soil Component Name: Capay

Soil Surface Texture: clay

Hydrologic Group: Class D - Very slow infiltration rates. Soils are clayey, have a high water table, or are shallow to an impervious layer.

Soil Drainage Class: Moderately well drained

Hydric Status: Partially hydric

Corrosion Potential - Uncoated Steel: High

Depth to Bedrock Min: > 0 inches

Depth to Watertable Min: > 0 inches

Soil Layer Information							
	Boundary			Classification		Saturated hydraulic conductivity micro m/sec	Soil Reaction (pH)
Layer	Upper	Lower	Soil Texture Class	AASHTO Group	Unified Soil		
1	0 inches	20 inches	clay	Silt-Clay Materials (more than 35 pct. passing No. 200), Clayey Soils.	FINE-GRAINED SOILS, Silts and Clays (liquid limit 50% or more), Fat Clay.	Max: 1.4 Min: 0.42	Max: 8.4 Min: 6.6
2	20 inches	59 inches	clay	Silt-Clay Materials (more than 35 pct. passing No. 200), Clayey Soils.	FINE-GRAINED SOILS, Silts and Clays (liquid limit 50% or more), Fat Clay.	Max: 1.4 Min: 0.42	Max: 8.4 Min: 6.6

Soil Map ID: 2

Soil Component Name: STOMAR

Soil Surface Texture: clay loam

Hydrologic Group: Class C - Slow infiltration rates. Soils with layers impeding downward movement of water, or soils with moderately fine or fine textures.

Soil Drainage Class: Well drained

GEOCHECK® - PHYSICAL SETTING SOURCE SUMMARY

Hydric Status: Partially hydric

Corrosion Potential - Uncoated Steel: High

Depth to Bedrock Min: > 0 inches

Depth to Watertable Min: > 0 inches

Soil Layer Information							
	Boundary			Classification		Saturated hydraulic conductivity micro m/sec	Soil Reaction (pH)
Layer	Upper	Lower	Soil Texture Class	AASHTO Group	Unified Soil		
1	0 inches	16 inches	clay loam	Silt-Clay Materials (more than 35 pct. passing No. 200), Clayey Soils.	FINE-GRAINED SOILS, Silts and Clays (liquid limit less than 50%), Lean Clay	Max: 4 Min: 1.4	Max: 8.4 Min: 7.4
2	16 inches	46 inches	clay	Silt-Clay Materials (more than 35 pct. passing No. 200), Clayey Soils.	FINE-GRAINED SOILS, Silts and Clays (liquid limit less than 50%), Lean Clay	Max: 4 Min: 1.4	Max: 8.4 Min: 7.4
3	46 inches	59 inches	clay loam	Silt-Clay Materials (more than 35 pct. passing No. 200), Clayey Soils.	FINE-GRAINED SOILS, Silts and Clays (liquid limit less than 50%), Lean Clay	Max: 4 Min: 1.4	Max: 8.4 Min: 7.4

LOCAL / REGIONAL WATER AGENCY RECORDS

EDR Local/Regional Water Agency records provide water well information to assist the environmental professional in assessing sources that may impact ground water flow direction, and in forming an opinion about the impact of contaminant migration on nearby drinking water wells.

WELL SEARCH DISTANCE INFORMATION

DATABASE	SEARCH DISTANCE (miles)
Federal USGS	1.000
Federal FRDS PWS	Nearest PWS within 0.001 miles
State Database	1.000

FEDERAL USGS WELL INFORMATION

MAP ID	WELL ID	LOCATION FROM TP

GEOCHECK® - PHYSICAL SETTING SOURCE SUMMARY

FEDERAL USGS WELL INFORMATION

MAP ID	WELL ID	LOCATION FROM TP
1	USGS40000185132	1/4 - 1/2 Mile SW
2	USGS40000185106	1/2 - 1 Mile SE
A3	USGS40000185068	1/2 - 1 Mile SSE
B6	USGS40000185144	1/2 - 1 Mile West
8	USGS40000185119	1/2 - 1 Mile ESE

FEDERAL FRDS PUBLIC WATER SUPPLY SYSTEM INFORMATION

MAP ID	WELL ID	LOCATION FROM TP
No PWS System Found		

Note: PWS System location is not always the same as well location.

STATE DATABASE WELL INFORMATION

MAP ID	WELL ID	LOCATION FROM TP
A4	CADW60000017076	1/2 - 1 Mile SSE
B5	CADW60000017075	1/2 - 1 Mile West
7	CADW60000032441	1/2 - 1 Mile East
B9	CADW60000031728	1/2 - 1 Mile West

OTHER STATE DATABASE INFORMATION

STATE OIL/GAS WELL INFORMATION

MAP ID	WELL ID	LOCATION FROM TP
1	CAOG11000236150	1/2 - 1 Mile NE

PHYSICAL SETTING SOURCE MAP - 5550691.2s

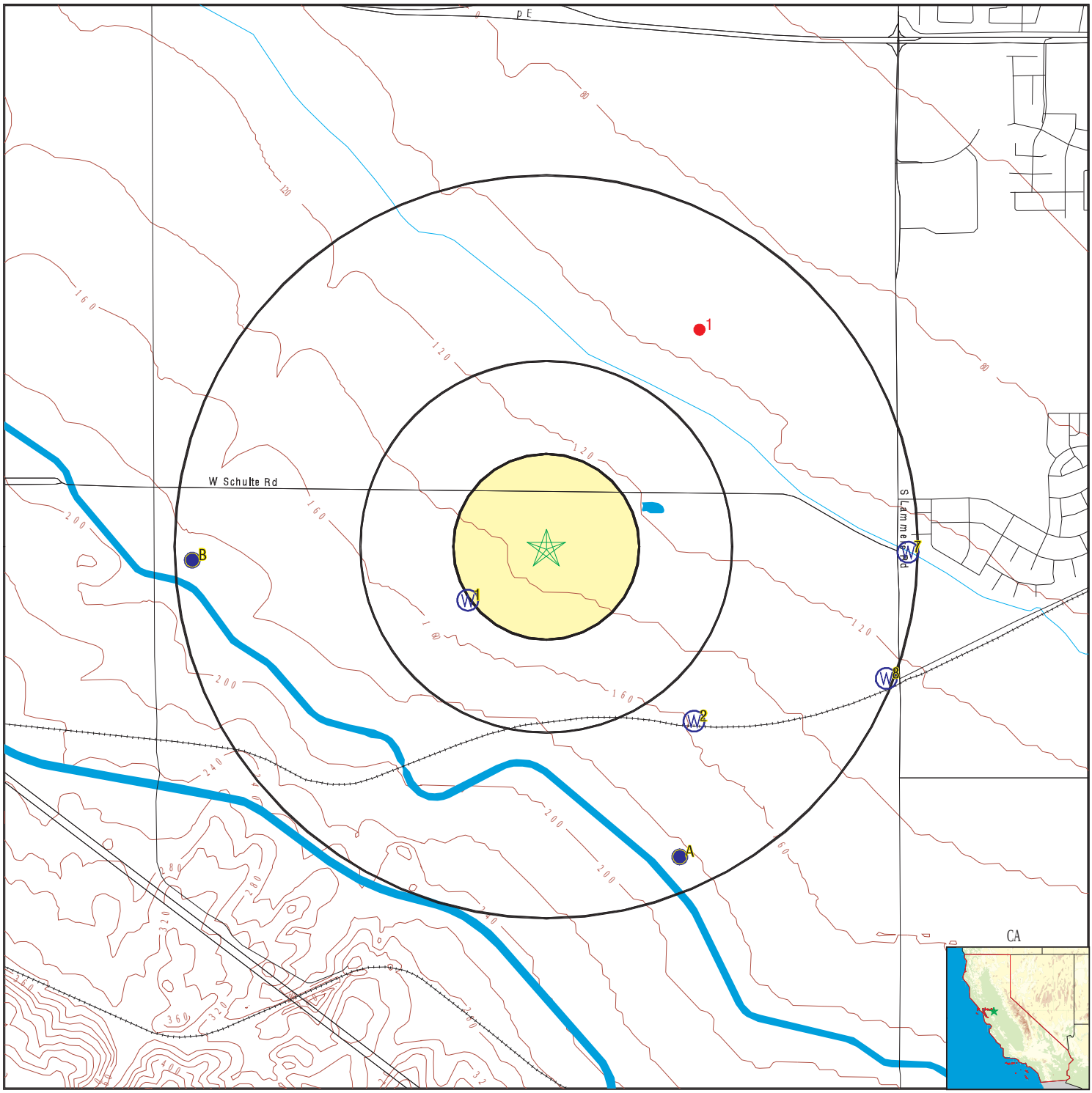

- County Boundary
- Major Roads
- Contour Lines
- Earthquake Fault Lines
- Earthquake epicenter, Richter 5 or greater
- Water Wells
- Public Water Supply Wells
- Cluster of Multiple Icons
- Groundwater Flow Direction
- Indeterminate Groundwater Flow at Location
- Groundwater Flow Varies at Location
- Closest Hydrogeological Data
- Oil, gas or related wells

SITE NAME:	Schulte Road Warehouse Water System	CLIENT:	Quality Service, Inc.
ADDRESS:	14900 W. Schulte Rd.	CONTACT:	Keven Jones
	Tracy CA 95377	INQUIRY #:	5550691.2s
LAT/LONG:	37.719515 / 121.493872	DATE:	January 31, 2019 8:09 pm

Copyright © 2019 EDR, Inc. © 2015 TomTom Rel. 2015.

GEOCHECK® - PHYSICAL SETTING SOURCE MAP FINDINGS

Map ID Direction Distance Elevation		Database	EDR ID Number
1 **NE** **1/2 - 1 Mile**	Click here for full text details	**OIL_GAS**	**CAOG11000236150**
1 **SW** **1/4 - 1/2 Mile** **Higher**	Click here for full text details	**FED USGS**	**USGS40000185132**
2 **SE** **1/2 - 1 Mile** **Higher**	Click here for full text details	**FED USGS**	**USGS40000185106**
A3 **SSE** **1/2 - 1 Mile** **Higher**	Click here for full text details	**FED USGS**	**USGS40000185068**
A4 **SSE** **1/2 - 1 Mile** **Higher**	Click here for full text details	**CA WELLS**	**CADW60000017076**
B5 **West** **1/2 - 1 Mile** **Higher**	Click here for full text details	**CA WELLS**	**CADW60000017075**
B6 **West** **1/2 - 1 Mile** **Higher**	Click here for full text details	**FED USGS**	**USGS40000185144**
7 **East** **1/2 - 1 Mile** **Lower**	Click here for full text details	**CA WELLS**	**CADW60000032441**
8 **ESE** **1/2 - 1 Mile** **Lower**	Click here for full text details	**FED USGS**	**USGS40000185119**

GEOCHECK® - PHYSICAL SETTING SOURCE MAP FINDINGS

Map ID Direction Distance Elevation		Database	EDR ID Number
B9 **West** **1/2 - 1 Mile** **Higher**	Click here for full text details	**CA WELLS**	**CADW60000031728**

GEOCHECK® - PHYSICAL SETTING SOURCE MAP FINDINGS
RADON

AREA RADON INFORMATION

State Database: CA Radon

Radon Test Results

Zipcode	Num Tests	> 4 pCi/L
95377	4	0

Federal EPA Radon Zone for SAN JOAQUIN County: 3

Note: Zone 1 indoor average level > 4 pCi/L.
: Zone 2 indoor average level >= 2 pCi/L and <= 4 pCi/L.
: Zone 3 indoor average level < 2 pCi/L.

Federal Area Radon Information for SAN JOAQUIN COUNTY, CA

Number of sites tested: 20

Area	Average Activity	% <4 pCi/L	% 4-20 pCi/L	% >20 pCi/L
Living Area - 1st Floor	2.530 pCi/L	90%	10%	0%
Living Area - 2nd Floor	Not Reported	Not Reported	Not Reported	Not Reported
Basement	2.050 pCi/L	100%	0%	0%

PHYSICAL SETTING SOURCE RECORDS SEARCHED

TOPOGRAPHIC INFORMATION

USGS 7.5' Digital Elevation Model (DEM)
Source: United States Geologic Survey
EDR acquired the USGS 7.5' Digital Elevation Model in 2002 and updated it in 2006. The 7.5 minute DEM corresponds to the USGS 1:24,000- and 1:25,000-scale topographic quadrangle maps. The DEM provides elevation data with consistent elevation units and projection.

Source: U.S. Geological Survey

HYDROLOGIC INFORMATION

Flood Zone Data: This data was obtained from the Federal Emergency Management Agency (FEMA). It depicts 100-year and 500-year flood zones as defined by FEMA. It includes the National Flood Hazard Layer (NFHL) which incorporates Flood Insurance Rate Map (FIRM) data and Q3 data from FEMA in areas not covered by NFHL.
Source: FEMA
Telephone: 877-336-2627
Date of Government Version: 2003, 2015

NWI: National Wetlands Inventory. This data, available in select counties across the country, was obtained by EDR in 2002, 2005 and 2010 from the U.S. Fish and Wildlife Service.

State Wetlands Data: Wetland Inventory
Source: Department of Fish and Wildlife
Telephone: 916-445-0411

HYDROGEOLOGIC INFORMATION

AQUIFLOW^{R} Information System
Source: EDR proprietary database of groundwater flow information
EDR has developed the AQUIFLOW Information System (AIS) to provide data on the general direction of groundwater flow at specific points. EDR has reviewed reports submitted to regulatory authorities at select sites and has extracted the date of the report, hydrogeologically determined groundwater flow direction and depth to water table information.

GEOLOGIC INFORMATION

Geologic Age and Rock Stratigraphic Unit
Source: P.G. Schruben, R.E. Arndt and W.J. Bawiec, Geology of the Conterminous U.S. at 1:2,500,000 Scale - A digital representation of the 1974 P.B. King and H.M. Beikman Map, USGS Digital Data Series DDS - 11 (1994).

STATSGO: State Soil Geographic Database
Source: Department of Agriculture, Natural Resources Conservation Service (NRCS)
The U.S. Department of Agriculture's (USDA) Natural Resources Conservation Service (NRCS) leads the national Conservation Soil Survey (NCSS) and is responsible for collecting, storing, maintaining and distributing soil survey information for privately owned lands in the United States. A soil map in a soil survey is a representation of soil patterns in a landscape. Soil maps for STATSGO are compiled by generalizing more detailed (SSURGO) soil survey maps.

SSURGO: Soil Survey Geographic Database
Source: Department of Agriculture, Natural Resources Conservation Service (NRCS)
Telephone: 800-672-5559
SSURGO is the most detailed level of mapping done by the Natural Resources Conservation Service, mapping scales generally range from 1:12,000 to 1:63,360. Field mapping methods using national standards are used to construct the soil maps in the Soil Survey Geographic (SSURGO) database. SSURGO digitizing duplicates the original soil survey maps. This level of mapping is designed for use by landowners, townships and county natural resource planning and management.

PHYSICAL SETTING SOURCE RECORDS SEARCHED

LOCAL / REGIONAL WATER AGENCY RECORDS

FEDERAL WATER WELLS

PWS: Public Water Systems
Source: EPA/Office of Drinking Water
Telephone: 202-564-3750
Public Water System data from the Federal Reporting Data System. A PWS is any water system which provides water to at least 25 people for at least 60 days annually. PWSs provide water from wells, rivers and other sources.

PWS ENF: Public Water Systems Violation and Enforcement Data
Source: EPA/Office of Drinking Water
Telephone: 202-564-3750
Violation and Enforcement data for Public Water Systems from the Safe Drinking Water Information System (SDWIS) after August 1995. Prior to August 1995, the data came from the Federal Reporting Data System (FRDS).

USGS Water Wells: USGS National Water Inventory System (NWIS)
This database contains descriptive information on sites where the USGS collects or has collected data on surface water and/or groundwater. The groundwater data includes information on wells, springs, and other sources of groundwater.

STATE RECORDS

Water Well Database
Source: Department of Water Resources
Telephone: 916-651-9648

California Drinking Water Quality Database
Source: Department of Public Health
Telephone: 916-324-2319
The database includes all drinking water compliance and special studies monitoring for the state of California since 1984. It consists of over 3,200,000 individual analyses along with well and water system information.

OTHER STATE DATABASE INFORMATION

California Oil and Gas Well Locations
Source: Department of Conservation
Telephone: 916-323-1779
Oil and Gas well locations in the state.

California Earthquake Fault Lines
Source: California Division of Mines and Geology
The fault lines displayed on EDR's Topographic map are digitized quaternary fault lines prepared in 1975 by the United State Geological Survey. Additional information (also from 1975) regarding activity at specific fault lines comes from California's Preliminary Fault Activity Map prepared by the California Division of Mines and Geology.

RADON

State Database: CA Radon
Source: Department of Public Health
Telephone: 916-210-8558
Radon Database for California

Area Radon Information
Source: USGS
Telephone: 703-356-4020
The National Radon Database has been developed by the U.S. Environmental Protection Agency (USEPA) and is a compilation of the EPA/State Residential Radon Survey and the National Residential Radon Survey. The study covers the years 1986 - 1992. Where necessary data has been supplemented by information collected at private sources such as universities and research institutions.

PHYSICAL SETTING SOURCE RECORDS SEARCHED

EPA Radon Zones
Source: EPA
Telephone: 703-356-4020
Sections 307 & 309 of IRAA directed EPA to list and identify areas of U.S. with the potential for elevated indoor radon levels.

OTHER

Airport Landing Facilities: Private and public use landing facilities
Source: Federal Aviation Administration, 800-457-6656

Epicenters: World earthquake epicenters, Richter 5 or greater
Source: Department of Commerce, National Oceanic and Atmospheric Administration

California Earthquake Fault Lines: The fault lines displayed on EDR's Topographic map are digitized quaternary fault lines, prepared in 1975 by the United State Geological Survey. Additional information (also from 1975) regarding activity at specific fault lines comes from California's Preliminary Fault Activity Map prepared by the California Division of Mines and Geology.

STREET AND ADDRESS INFORMATION

© 2015 TomTom North America, Inc. All rights reserved. This material is proprietary and the subject of copyright protection and other intellectual property rights owned by or licensed to Tele Atlas North America, Inc. The use of this material is subject to the terms of a license agreement. You will be held liable for any unauthorized copying or disclosure of this material.