APPENDIX 22.0

VESTING TENTATIVE PARCEL MAP

NO. 37736

VESTING TENTATIVE PARCEL MAP 37736

FOR COMMERCIAL PURPOSED

LEGAL DESCRIPTION

THE LAND REFERRED TO HEREIN BELOW IS SITUATED IN THE CITY OF WILDOMAR, IN THE COUNTY OF RIVERSIDE, STATE OF CALIFORNIA, AND IS DESCRIBED AS FOLLOWS:

APN: 380-110-004
THAT PORTION OF FRACTIONAL SECTION 1, TOWNSHIP 7 SOUTH, RANGE 4 WEST, SAN BERNARDINO BASE AND MERIDIAN, BEING ALSO A PORTION OF PARCEL 2 OF PARCEL MAP 6430, IN THE CITY OF WILDOMAR, COUNTY OF RIVERSIDE, STATE OF CALIFORNIA, RECORDED IN BOOK 18 PAGE 7 OF PARCEL MAPS, RECORDS OF RIVERSIDE COUNTY, CALIFORNIA, DESCRIBED AS FOLLOWS:
COMMENCING AT THE NORTHEAST CORNER OF SECTION 1 TOWNSHIP 7 SOUTH, RANGE 4 WEST, SAN BERNARDINO BASE AND MERIDIAN; THENCE WESTERLY ALONG THE NORTHERLY LINE OF SAID SECTION 1, A DISTANCE OF 1982.35 FEET; THENCE SOUTH 18° 02’ WEST, A DISTANCE OF 632.8 FEET; THENCE SOUTH 87° 03’ EAST, A DISTANCE OF 25.9 FEET, MORE OR LESS, TO A POINT ON THE SOUTHEASTERLY LINE OF SAID PARCEL 2, SAID POINT BEING THE POINT OF BEGINNING OF THE LINE TO BE DESCRIBED; THENCE NORTH 87° 03’ WEST, A DISTANCE OF 430.9 FEET, MORE OR LESS, TO A POINT ON THE WESTERLY LINE OF SAID PARCEL 2.

APN: 380-110-009
ALL THAT PORTION OF PARCEL 2 OP PARCEL MAP 6430, AS SHOWN BY MAP ON FILE IN BOOK 18 PAGE 7 OP PARCEL MAPS, RECORDS OF RIVERSIDE COUNTY, CALIFORNIA DESCRIBED AS FOLLOWS:
COMMENCING AT THE MOST NORTHEASTERLY CORNER OF SAID PARCEL 2;
THENCE SOUTH 18" 36' 40" WEST ALONG THE SOUTHEASTERLY LINE OF SAID PARCEL 2 A DISTANCE OF 300.00 FEET TO THE TRUE POINT OF BEGINNING;
THENCE NORTH 84° 43' 37" WEST, A DISTANCE OF 353. 06 FEET, MORE OR LESS, TO AN ANGLE POINT IN THE WESTERLY LINE OF SAID PARCEL 2.

SURVEYOR NOTES

THE BOUNDARY SHOWN HEREON IS BASED UPON EXISTING FOUND MONUMENTATION AND RECORDED MAPS AND DOCUMENTS.
CONTOURS AND ELEVATIONS SHOWN HEREON ARE BASED UPON AN AERIAL PHOTOGRAMMETRIC MAPPING.
CONTOURS - NINETY PERCENT (90%) OF ALL ELEVATIONS DERIVED FROM SOLID LINE CONTOURS SHALL NOT DEVIATE FROM TRUE ELEVATION BY MORE THAN HALF A CONTOUR INTERVAL. THE REMAINING TEN PERCENT (10%) SHALL BE ACCURATE TO WITHIN A WHOLE CONTOUR INTERVAL. IN CHECKING ELEVATIONS TAKEN FROM THE CONTOUR MAP, THE APPARENT VERTICAL ERROR MAY BE DECREASED BY ASSUMING A HORIZONTAL DISPLACEMENT OF SIXTY-FOUR HUNDREDTHS OF A MILLIMETER (0.64 MM).
IN AREAS WHERE THE GROUND IS OBSCURED WHEN CONSECUTIVE AERIAL PHOTOGRAPHS ARE VIEWED STEREOSCOPICALLY THROUGH A PHOTOGRAMMETRIC INSTRUMENT, CONTOURS SHALL BE PLOTTED AS ACCURATELY AS CONDITIONS PERMIT. IN PLACES WHERE THE GROUND IS VISIBLE, ANY PHOTOGRAMMETRICALLY MEASURED SPOT ELEVATIONS SHALL BE FULLY UTILIZED IN ESTABLISHING SUCH CONTOURS WHENEVER POSSIBLE. CONTOURS GENERATED UNDER THESE CONDITIONS SHALL BE REPRESENTED BY UNIFORMLY DASHED LINES.
SPOT ELEVATIONS - NINETY PERCENT (90%) OF ALL PLOTTED SPOT ELEVATIONS SHALL BE ACCURATELY POSITIONED TO WITHIN ONE FOURTH A CONTOUR INTERVAL. THE REMAINING TEN PERCENT (10%) SHALL BE ACCURATE TO WITHIN HALF A CONTOUR INTERVAL.
BENCHMARK
RIVERSIDE COUNTY B.M. E-20 AT SE CORNER OF PALOMAR AND CATT ROAD ELEV. = 1216.14

GENERAL NOTES

- THE PROPERTY IS LOCATED IN THE CITY OF WILDOMAR, RIVERSIDE COUNTY, CALIFORNIA.
- ASSESSOR PARCEL NUMBERS ARE: 380-110-009, 010, 014 AND 016.
- WILDOMAR GENERAL PLAN LAND USE DESIGNATION IS: COMMERCIAL RETAIL (CR).
- WILDOMAR ZONING IS: SCENIC HIGHWAY COMMERCIAL (C-P-S).
- PROPERTY GROSS AREA IS:

APN	GROSS AREA (AC.)
380-110-004	0.020
380-110-014	1.050
380-110-010	2.446
380-110-009	1.763
380-110-016	3.669
TOTAL:	8.948 ACRES

- THERE ARE EIGHTEEN (18) OAK TREES AND THREE (3) COTTONWOODS ONSITE.
- THERE ARE SEVEN OAKS OFFSITE WITHIN THE DRAINAGE COURSE AREA.
- THE PROPERTY IS LOCATED AT THE NORTHWEST CORNER OF CLINTON KEITH ROAD AND HIDDEN SPRINGS ROAD.
- GRADING PROPOSED AS A SINGLE PHASE.
- BUILDING CONSTRUCTION TIMING IS INDEPENDENT FROM ONE ANOTHER.
- THIS VESTING TENTATIVE/PARCEL MAP INCLUDES THE ENTIRE CONTIGUOUS OWNERSHIP OF THE OWNER/SUBDIVIDER.
- THERE IS NO FLOOD HAZARD AFFECTING THE SITE. THE FEMA FLOOD HAZARD DESIGNATION IS ZONE X (AREA OF MINIMAL FLOOD HAZARD).
- THE SITE IS NOT SUBJECT TO LIQUIFACTION OR OTHER GEOTECHNICAL HAZARDS AND IS NOT WITHIN A SPECIAL STUDIES ZONE.
- THE PROJECT IS IN COMPLIANCE WITH THE CIT OF WILDOMAR WATER QUALITY MANAGEMENT PLAN REQUIREMENTS.
- THE SITE IS LOCATED IN THOMAS BROTHERS RIVERSIDE COUNTY MAP BOOK, PAGE 927, SECTION F-1.

UTILITIES AND SERVICES

- STORM DRAIN - CITY OF WILDOMAR
- SEWER - ELSINORE VALLEY MUNICIPAL WATER DISTRICT
- WATER - ELSINORE VALLEY MUNICIPAL WATER DISTRICT
- GAS - SOUTHERN CALIFORNIA GAS COMPANY
- ELECTRICAL - SOUTHERN CALIFORNIA EDISON COMPANY
- TELEPHONE - AT&T
- SCHOOLS - LAKE ELSINORE UNIFIED SCHOOL DISTRICT
- PARKS - CITY OF WILDOMAR
- POLICE - RIVERSIDE COUNTY SHERIFF DEPARTMENT
- FIRE - RIVERSIDE COUNTY FIRE DEPARTMENT

TABLE OF CONTENTS

PAGE NO.	DESCRIPTION
1	TITLE PAGE - NOTES AND STREET SECTIONS
2	TENTATIVE MAP - PLAN SHEET
3	CONCEPTUAL GRADING EXHIBIT
4	CONCEPTUAL GRADING CROSS SECTION EXHIBIT
5	EXISTING ON-SITE EASEMENT AND RIGHT OF WAY EXHIBIT
6	PROPOSED ON-SITE EASEMENT AND RIGHT OF WAY EXHIBIT
7	PROPOSED OFF-SITE EASEMENT EXHIBIT
8	CONCEPTUAL LANE CONFIGURATION AND STRIPING EXHIBIT
9	SIGHT DISTANCE EXHIBIT
10	CONSTRAINTS EXHIBIT
11	REQUIRED SUBMITTAL INFORMATION REFERENCE CHART

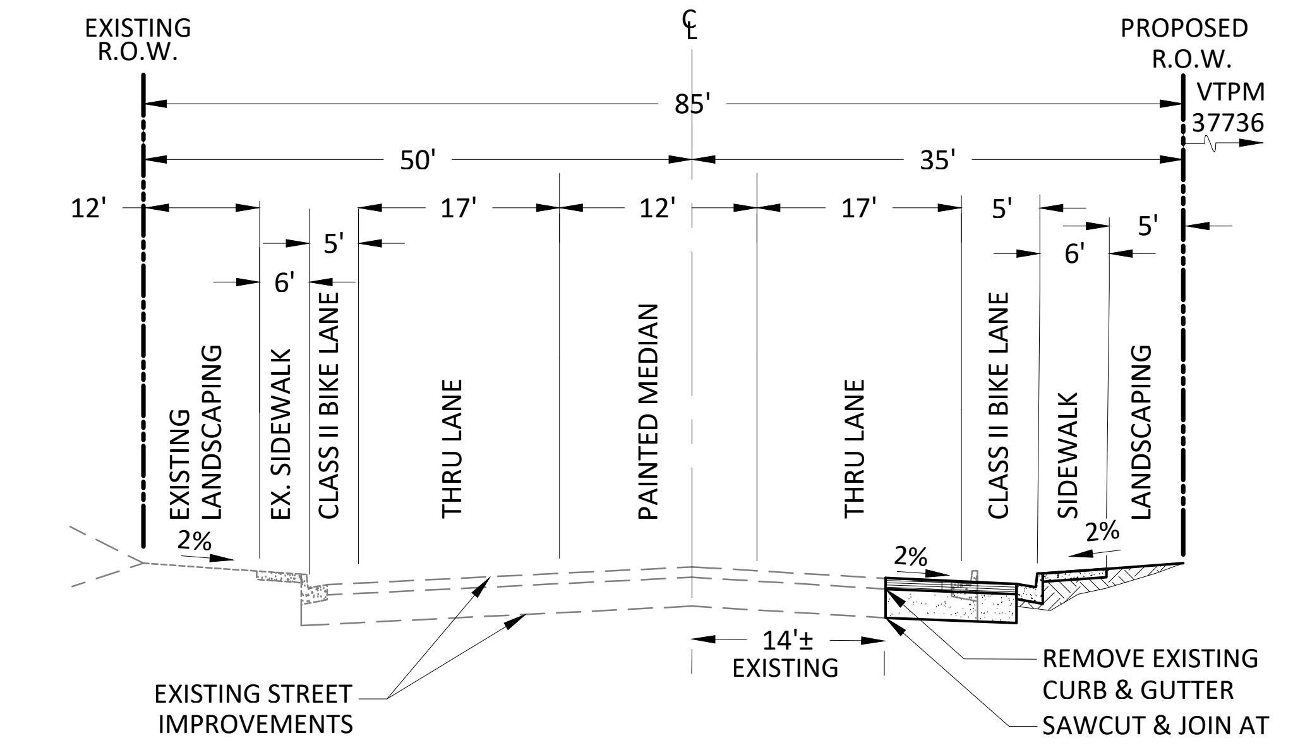

EXISTING R.O.W.
℄
PROPOSED R.O.W.
VTPM 37736
85'
50'
35'
12'
6'
5'
17'
12'
17'
5'
6'
5'
EXISTING LANDSCAPING
EX. SIDEWALK
CLASS II BIKE LANE
THRU LANE
PAINTED MEDIAN
THRU LANE
CLASS II BIKE LANE
SIDEWALK
LANDSCAPING
2%
2%
2%
14'± EXISTING
EXISTING STREET IMPROVEMENTS
REMOVE EXISTING CURB & GUTTER
SAWCUT & JOIN AT EXISTING PAVEMENT

SECTION 'A-A'
HIDDEN SPRINGS ROAD
NOT TO SCALE

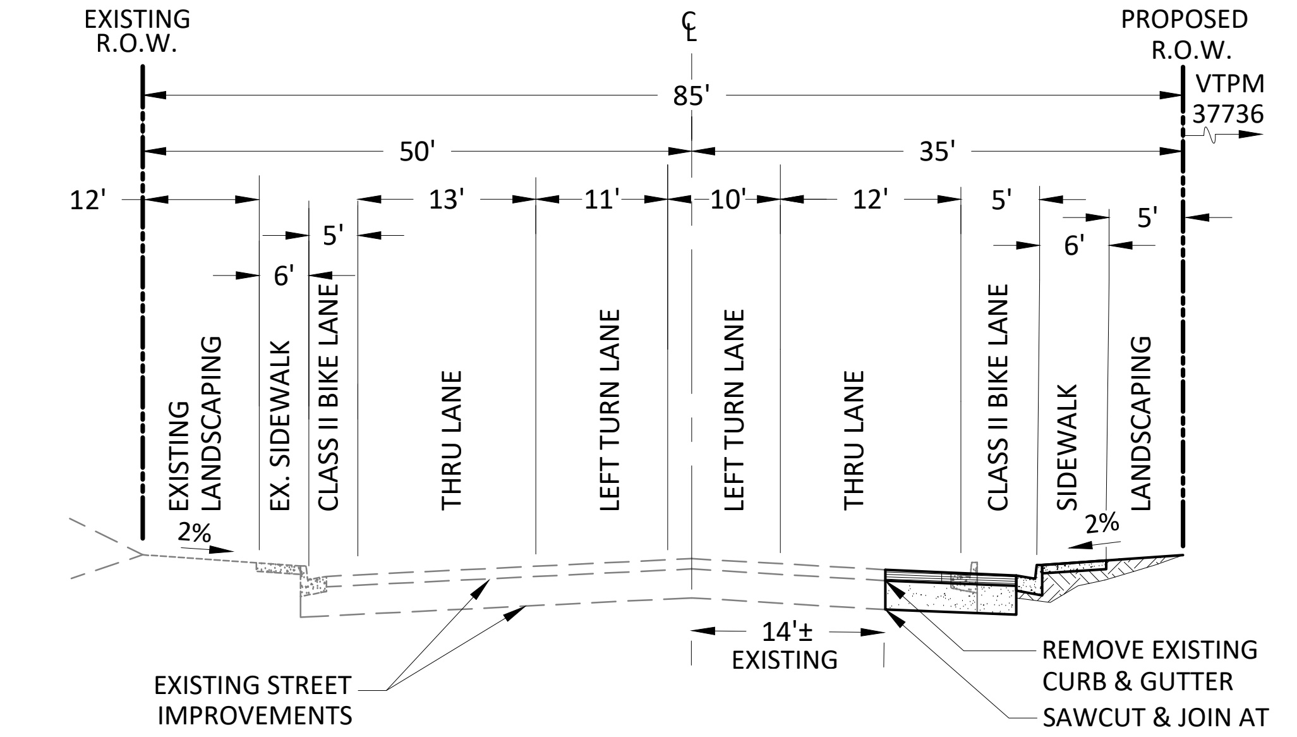

EXISTING R.O.W.
℄
PROPOSED R.O.W.
VTPM 37736
85'
50'
35'
12'
6'
5'
13'
11'
10'
12'
5'
6'
5'
EXISTING LANDSCAPING
EX. SIDEWALK
CLASS II BIKE LANE
THRU LANE
LEFT TURN LANE
LEFT TURN LANE
THRU LANE
CLASS II BIKE LANE
SIDEWALK
LANDSCAPING
2%
2%
14'± EXISTING
EXISTING STREET IMPROVEMENTS
REMOVE EXISTING CURB & GUTTER
SAWCUT & JOIN AT EXISTING PAVEMENT

SECTION 'B-B'
HIDDEN SPRINGS ROAD
NOT TO SCALE

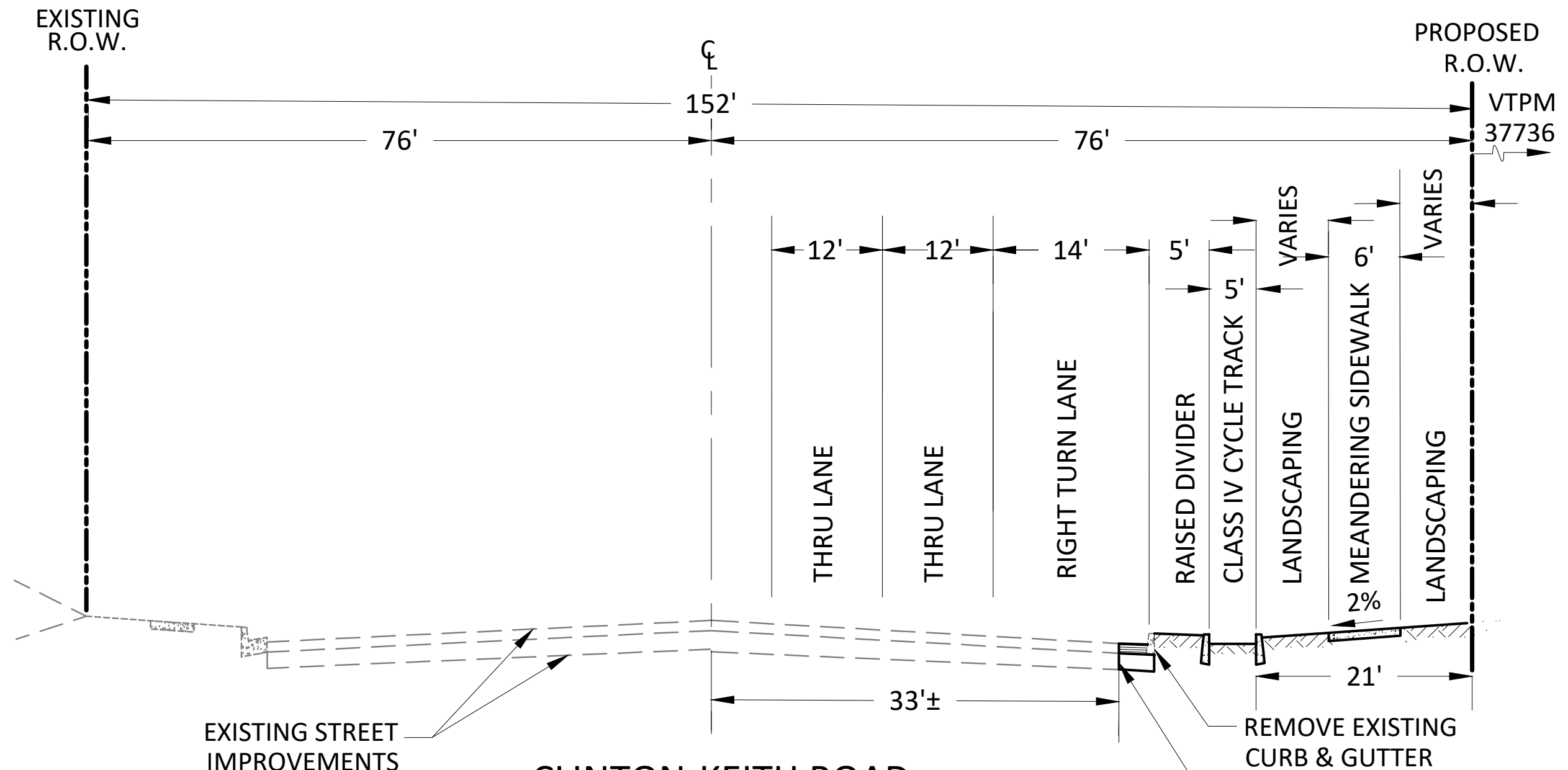

EXISTING R.O.W.
℄
PROPOSED R.O.W.
VTPM 37736
152'
76'
76'
12'
12'
14'
5'
5'
VARIES
6'
VARIES
THRU LANE
THRU LANE
RIGHT TURN LANE
RAISED DIVIDER
CLASS IV CYCLE TRACK
LANDSCAPING
MEANDERING SIDEWALK
LANDSCAPING
2%
33'±
21'
EXISTING STREET IMPROVEMENTS
REMOVE EXISTING CURB & GUTTER
SAWCUT & JOIN AT EXISTING PAVEMENT

CLINTON-KEITH ROAD
SECTION 'C-C'
NOT TO SCALE

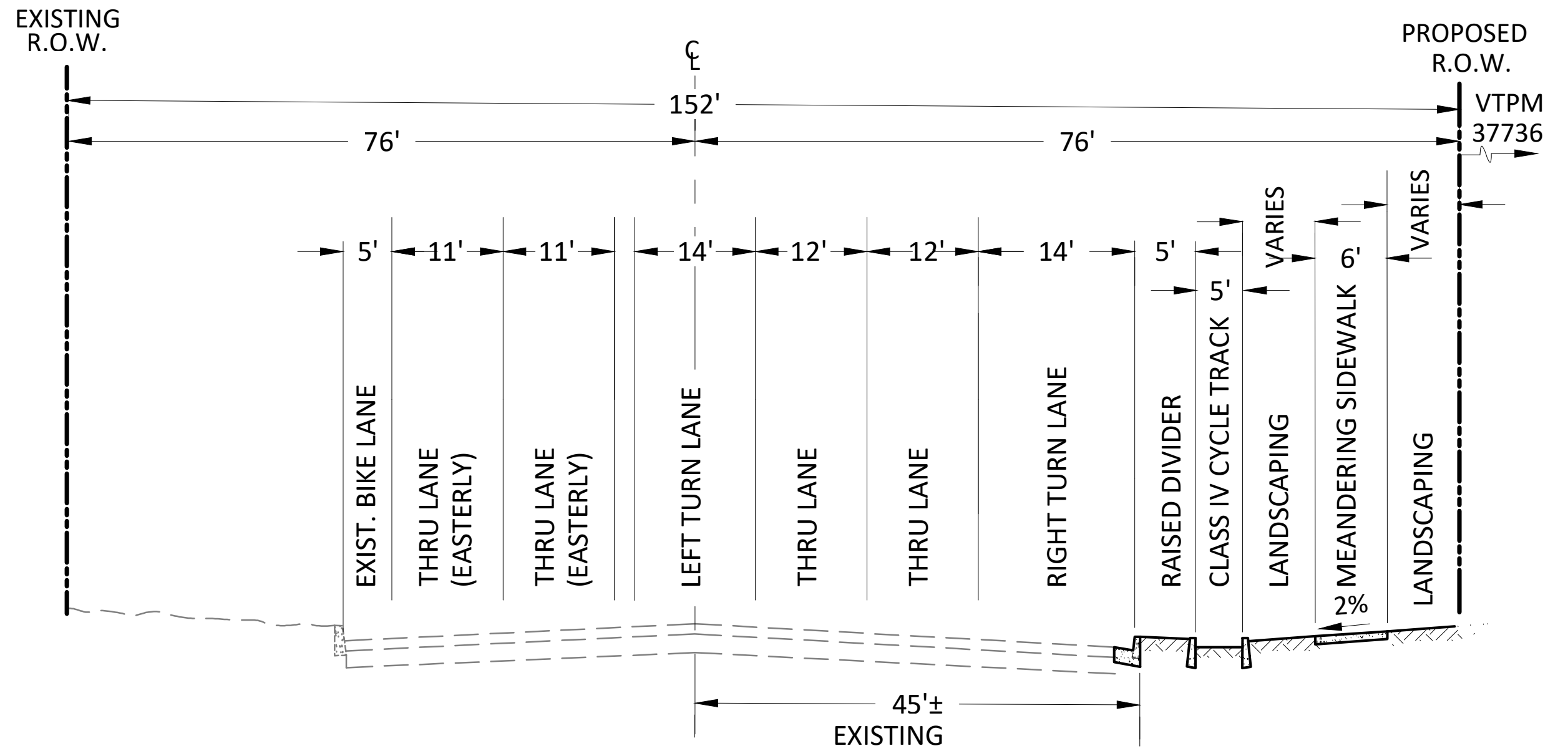

EXISTING R.O.W.
℄
PROPOSED R.O.W.
VTPM 37736
152'
76'
76'
5'
11'
11'
14'
12'
12'
14'
5'
5'
VARIES
6'
VARIES
EXIST. BIKE LANE
THRU LANE (EASTERLY)
THRU LANE (EASTERLY)
LEFT TURN LANE
THRU LANE
THRU LANE
RIGHT TURN LANE
RAISED DIVIDER
CLASS IV CYCLE TRACK
LANDSCAPING
MEANDERING SIDEWALK
LANDSCAPING
2%
45'± EXISTING

CLINTON-KEITH ROAD
SECTION 'D-D'
NOT TO SCALE

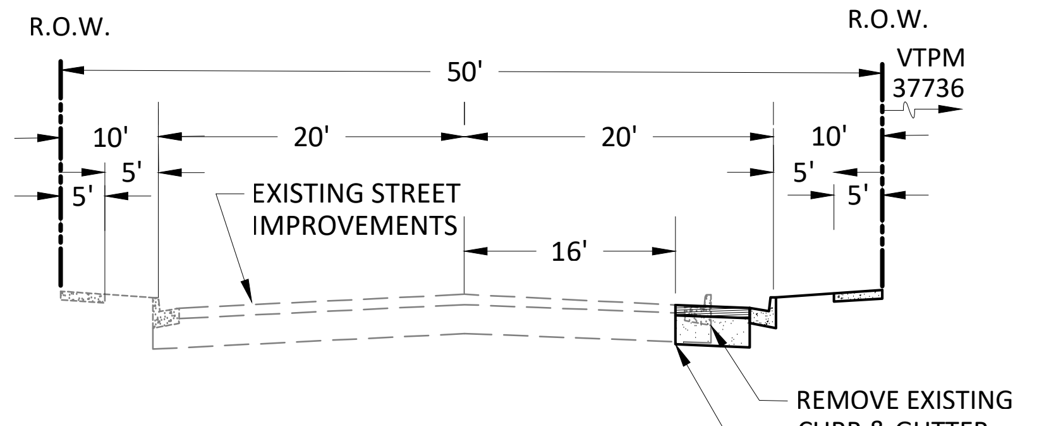

R.O.W.
R.O.W.
VTPM 37736
50'
10'
20'
20'
10'
5'
5'
5'
5'
16'
EXISTING STREET IMPROVEMENTS
REMOVE EXISTING CURB & GUTTER
SAWCUT & JOIN EXISTING PAVEMENT

STABLE LANES WAY
SECTION 'E-E'
LOCAL STREET
STD # 105
2 OF 2
NOT TO SCALE

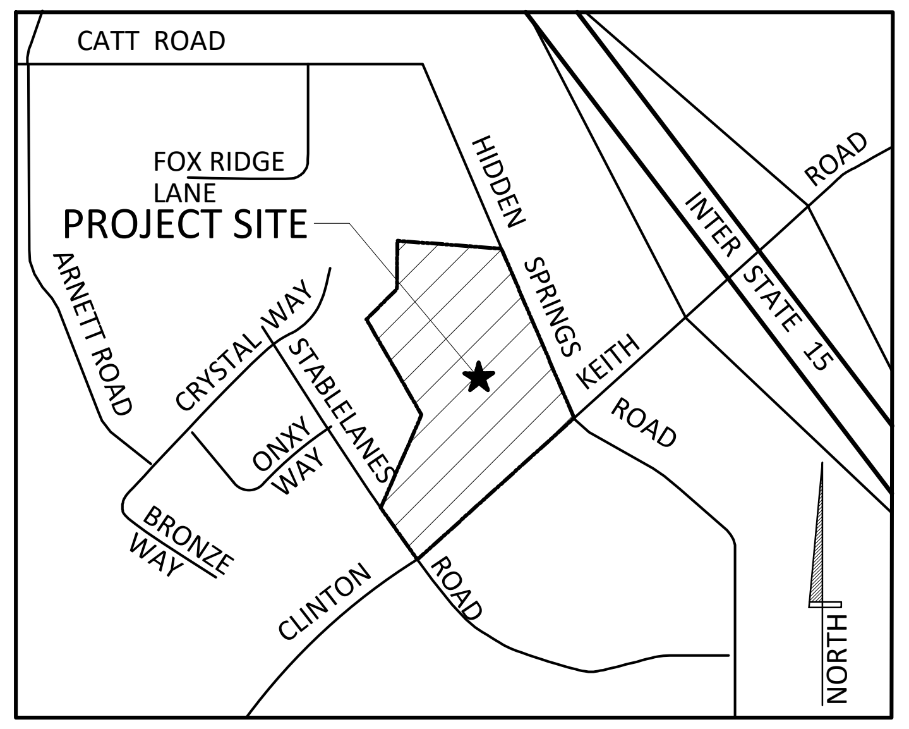

CATT ROAD
FOX RIDGE LANE
PROJECT SITE
ARNETT ROAD
CRYSTAL WAY
STABLELANES
ONXY WAY
BRONZE WAY
HIDDEN SPRINGS ROAD
CLINTON KEITH ROAD
INTER STATE 15
ROAD
NORTH

VICINITY MAP
NOT TO SCALE

APPLICANT/OWNER

SOMAR LAND GROUP, INC.
16391 HARWICH CIRCLE
RIVERSIDE, CA. 92503
ATTN: STEVE MACIE
TELE: (702) 497-3101

CIVIL ENGINEER

CHALLMAN ENGINEERING, INC. + CEI BUILD, INC.
41758 12TH STREET WEST, SUITE 'A'
PALMDALE, CA. 93551
ATTN: BILL CHALLMAN
TELE: (661) 524-0911

LAND DEVELOPMENT CONSULTANT

PACIFIC WEST HOME SOLUTIONS, LLC
25220 AVENUE STANFORD, SUITE 311
SANTA CLARITA, CA. 91355
ATTN: RON DRUSCHEN
TELE: (626) 482-4580

ARCHITECT

KTGY
17911 VON KARMAN AVENUE, SUITE 200
IRVINE, CA 92614
ATTN: MICHAEL TSENG AND JENNIFER WEIGAND
TELE: (949) 851-2133

TRAFFIC ENGINEER

URBAN CROSSSROADS
1133 CAMELBACK ST. #8329
NEWPORT BEACH, CA 92658
TELE: (949) 660-1991

PROJECT SURVEYOR

FJS LAND CONSULTING
4054 BRINDISI PLACE
MOORPARK, CA 93201
ATTN: FRANK SOBECKI
TELE: (805) 501-4075

No.	REVISION DESCRIPTION	BY	DATE
△			
△			
△			
△			
△			
△			
△			

PACIFIC West
Life....Elevated by Design

VESTING TENTATIVE PARCEL MAP NO. 37736
CLINTON KEITH MARKETPLACE
SEPTEMBER 1, 2021
WILDOMAR, CA

DESIGNED:	RD
DRAWN:	JS
CHECKED:	BC
SUPERVISED:	RD
DATE:	12-17-2021
SCALE:	1" = 50'
JOB NUMBER:	1012-001

ARCHITECTURAL CIVIL STRUCTURAL BUILD
CEI+B
CHALLMAN ENGINEERING INC+CEI BUILD INC
A DESIGN-BUILD COMPANY

WILLIAM J. CHALLMAN
No. 61872
Exp. 9-30-23
CIVIL

SHEET NO.
1
OF 11 SHEETS

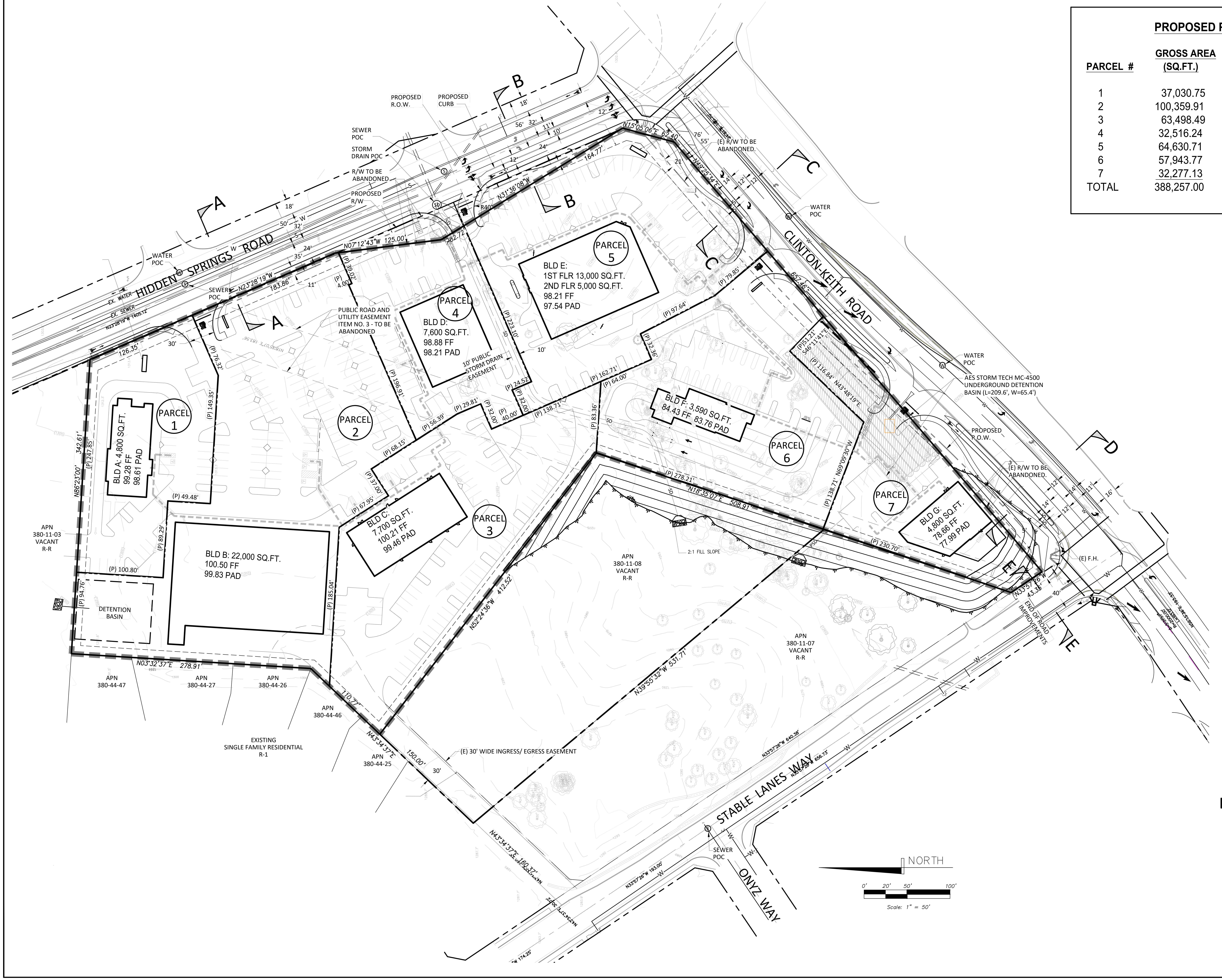
HIDDEN SPRINGS ROAD
CLINTON-KEITH ROAD
STABLE LANES WAY
ONYZ WAY
A
B
C
D
E
PROPOSED R.O.W.
PROPOSED CURB
SEWER POC
STORM DRAIN POC
R/W TO BE ABANDONED
PROPOSED R/W
WATER POC
EX. WATER
EX. SEWER
N23°28'19"W 1405.12'
18'
50'
32'
24'
35'
56'
11'
10'
12'
5'
R40'
N15°05'06"E 62.40'
76'
55'
(E) R/W TO BE ABANDONED.
21'
164.77'
N31°36'08"W
82.72'
N07°12'43"W 125.00'
N23°28'19"W
183.86'
11'
126.35'
30'
N49°25'34"E
14'
12'
WATER POC
PARCEL 5
BLD E:
1ST FLR 13,000 SQ.FT.
2ND FLR 5,000 SQ.FT.
98.21 FF
97.54 PAD
PARCEL 4
BLD D:
7,600 SQ.FT.
98.88 FF
98.21 PAD
PUBLIC ROAD AND UTILITY EASEMENT ITEM NO. 3 - TO BE ABANDONED
10' PUBLIC STORM DRAIN EASEMENT
(P) 39.02'
(P) 4.00'
(P) 223.10'
10'
(P) 76.32'
(P) 149.35'
(P) 196.91'
(P) 24.52'
(P) 32.00'
(P) 40.00'
(P) 29.81'
(P) 56.39'
(P) 138.71'
(P) 162.71'
(P) 64.00'
(P) 83.36'
(P) 32.36'
(P) 97.64'
(P) 79.85'
657.46'
(P)51.21'
S46°11'41"E
(P) 116.84'
N43°48'19"E
AES STORM TECH MC-4500 UNDERGROUND DETENTION BASIN (L=209.6', W=65.4')
PROPOSED R.O.W.
PARCEL 1
BLD A: 4,800 SQ.FT.
99.28 FF
98.61 PAD
PARCEL 2
PARCEL 3
BLD C:
7,700 SQ.FT.
100.21 FF
99.46 PAD
BLD B: 22,000 SQ.FT.
100.50 FF
99.83 PAD
PARCEL 6
BLD F: 3,590 SQ.FT.
84.43 FF
83.76 PAD
PARCEL 7
BLD G:
4,800 SQ.FT.
78.66 FF
77.99 PAD
(P) 68.15'
(P) 37.00'
(P) 67.95'
(P) 49.48'
(P) 89.29'
(P) 100.80'
(P) 94.76'
(P) 185.04'
(P) 247.85'
N86°23'00" 342.61'
DETENTION BASIN
APN 380-11-03 VACANT R-R
N03°32'37"E 278.91'
APN 380-44-47
APN 380-44-27
APN 380-44-26
APN 380-44-46
110.77'
N43°34'37"E
150.00'
30'
APN 380-44-25
EXISTING SINGLE FAMILY RESIDENTIAL R-1
(E) 30' WIDE INGRESS/ EGRESS EASEMENT
N52°24'36"W 412.52'
APN 380-11-08 VACANT R-R
(P) 278.21'
N18°35'07"E 508.91'
(P) 138.71' N69°09'30"W
(P) 230.70'
2:1 FILL SLOPE
SD
PSD
N39°55'32"W 531.71'
APN 380-11-07 VACANT R-R
(E) R/W TO BE ABANDONED.
16'
(E) F.H.
N33°57'26"W 43.35'
40'
END OF ROAD IMPROVEMENTS
N33°57'26"W 640.38'
N33°57'26"W 656.73'
N33°57'26"W 193.00'
SEWER POC
NORTH
0' 20' 50' 100'
Scale: 1" = 50'

PROPOSED PARCEL AREA TABLE

PARCEL #	GROSS AREA (SQ.FT.)	LESS: PUBLIC EASEMENT (SQ.FT).	NET AREA (SQ.FT).
1	37,030.75	735.93	36,294.82
2	100,359.91	14,949.35	85,410.56
3	63,498.49	10,12350	53,374.99
4	32,516.24	5,775.07	26,741.17
5	64,630.71	2,190.25	62,440.46
6	57,943.77	7,050.92	50,892.85
7	32,277.13	5,994.66	26,282.47
TOTAL	388,257.00	46,819.68	341,437.32

LEGEND

	RIGHT OF WAY
	PARCEL LINE
	TRACT BOUNDARY
	INGRESS/EGRESS EASEMENT
	EASEMENT
	EXISTING LOT LINE
	DAYLIGHT LIGHT
690	PROPOSED MAJOR CONTOUR
692	PROPOSED MINOR COUNTOUR
	EXISTING CURB
	EXISTING MEDIAN
■■■■■■■■■	PLANNING AREA BOUNDARY
	CENTERLINE
	WALL LINE
x	FENCE LINE
C F	CUT/FILL
	TOP SLOPE TOE SLOPE
(P) 28.78'	PROPOSED PROPERTY LINES & DIMENSIONS
FL	NATURAL FLOWLINE
SD	PUBLIC STORM DRAIN
PSD	PRIVATE STORM DRAIN
S	PUBLIC SEWER MAIN
W	PUBLIC WATER MAIN
D D	SEE SHEET 1 FOR SECTIONS
●	FOUND MONUMENT
☼	LIGHT POST
—○—	POWER POLE
E	ELECTRICAL PULL BOX
☉	GUY ANCHOR
▣	MAILBOX
⊗	MONITORING WELL
	OAK TREE LOCATION & DRIP LINE
(P)	PROPOSED
(E)	EXISTING

No.	REVISION DESCRIPTION
△	
△	
△	
△	
△	
△	
△	

PACIFIC West
Life....Elevated by Design

VESTING TENTATIVE PARCEL MAP NO. 37736
CLINTON KEITH MARKETPLACE
SEPTEMBER 1, 2021
WILDOMAR, CA

DESIGNED:	RD
DRAWN:	JS
CHECKED:	BC
SUPERVISED:	RD
DATE:	12-17-2021
SCALE:	1" = 50'
JOB NUMBER:	1012-001

ARCHITECTURAL CIVIL STRUCTURAL BUILD
CEI+B
CHALLMAN ENGINEERING INC+CEI BUILD INC
A DESIGN-BUILD COMPANY

WILLIAM J. CHALLMAN
No. 61872
Exp. 9-30-23

SHEET NO.
2
OF 11 SHEETS

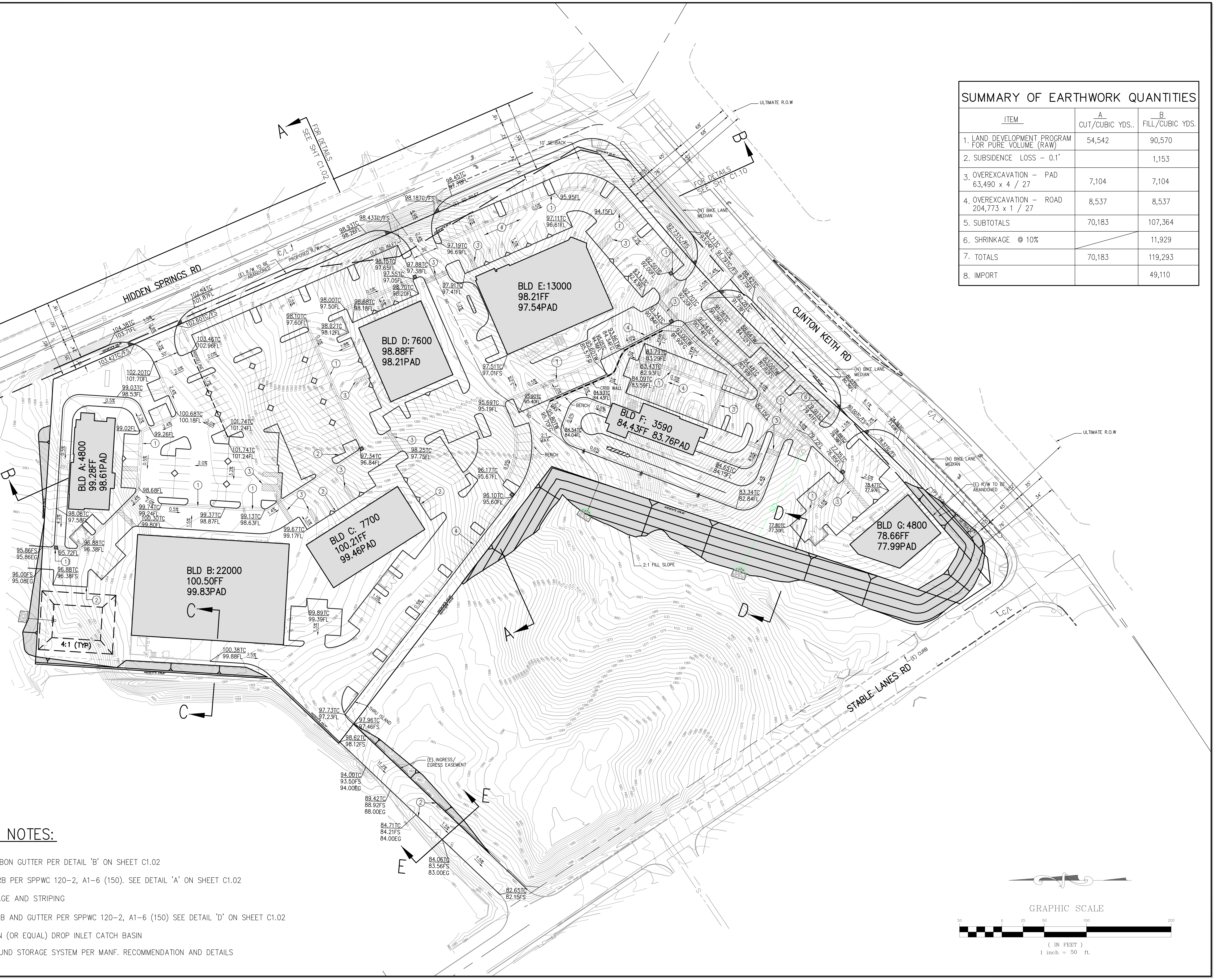
HIDDEN SPRINGS RD
CLINTON KEITH RD
STABLE LANES RD
A
FOR DETAILS SEE SHT C1.02
B
FOR DETAILS SEE SHT C1.10
ULTIMATE R.O.W
10' SETBACK
(N) BIKE LANE MEDIAN
(E) R/W TO BE ABANDONED
PROPOSED R/W
C/L
BLD A: 4800
99.28FF
98.61PAD
BLD B: 22000
100.50FF
99.83PAD
BLD C: 7700
100.21FF
99.46PAD
BLD D: 7600
98.88FF
98.21PAD
BLD E: 13000
98.21FF
97.54PAD
BLD F: 3590
84.43FF
83.76PAD
BLD G: 4800
78.66FF
77.99PAD
C
D
E
4:1 (TYP)
2:1 FILL SLOPE
CRIB WALL
BENCH
THRU ISLAND
(E) INGRESS/EGRESS EASEMENT
(E) CURB
GRAPHIC SCALE
50 0 25 50 100 200
(IN FEET)
1 inch = 50 ft.

SUMMARY OF EARTHWORK QUANTITIES

ITEM	A CUT/CUBIC YDS..	B FILL/CUBIC YDS.
1. LAND DEVELOPMENT PROGRAM FOR PURE VOLUME (RAW)	54,542	90,570
2. SUBSIDENCE LOSS – 0.1'		1,153
3. OVEREXCAVATION – PAD 63,490 x 4 / 27	7,104	7,104
4. OVEREXCAVATION – ROAD 204,773 x 1 / 27	8,537	8,537
5. SUBTOTALS	70,183	107,364
6. SHRINKAGE @ 10%		11,929
7. TOTALS	70,183	119,293
8. IMPORT		49,110

CONSTRUCTION NOTES:

① CONSTRUCT 4' WIDE RIBBON GUTTER PER DETAIL 'B' ON SHEET C1.02

② CONSTRUCT 6" PCC CURB PER SPPWC 120–2, A1–6 (150). SEE DETAIL 'A' ON SHEET C1.02

③ CONSTRUCT ADA SIGNAGE AND STRIPING

④ CONSTRUCT 6" PCC CURB AND GUTTER PER SPPWC 120–2, A1–6 (150) SEE DETAIL 'D' ON SHEET C1.02

⑤ INSTALL 36"X36" JENSEN (OR EQUAL) DROP INLET CATCH BASIN

⑥ INSTALL ADS UNDERGROUND STORAGE SYSTEM PER MANF. RECOMMENDATION AND DETAILS

PROJECT OWNER

SOMAR LAND GROUP, INC
16391 HARWICH CIRCLE
RIVERSIDE, CA, 92503
ATTN: MR. STEVE MACIE
(702) 497-3101

CONSULTANT

Duke Engineering
CIVIL & STRUCTURAL
LANCASTER - CALIFORNIA

44732 YUCCA AVENUE
LANCASTER, CA
661-952-7918

REVISIONS

No.	Revisions	By	Date

PROJECT

CLINTON KEITH
MARKETPLACE
380-110-004,009,010,014,016
WILDOMAR, CA

ENGINEER OF RECORD

RYAN DUKE
C079729
EXP. 9-30-22

SHEET TITLE

CONCEPTUAL
GRADING
PLAN

SHEET

C1.00

PROJECT: 19067

SHEET NO.

3

OF 10 SHEETS

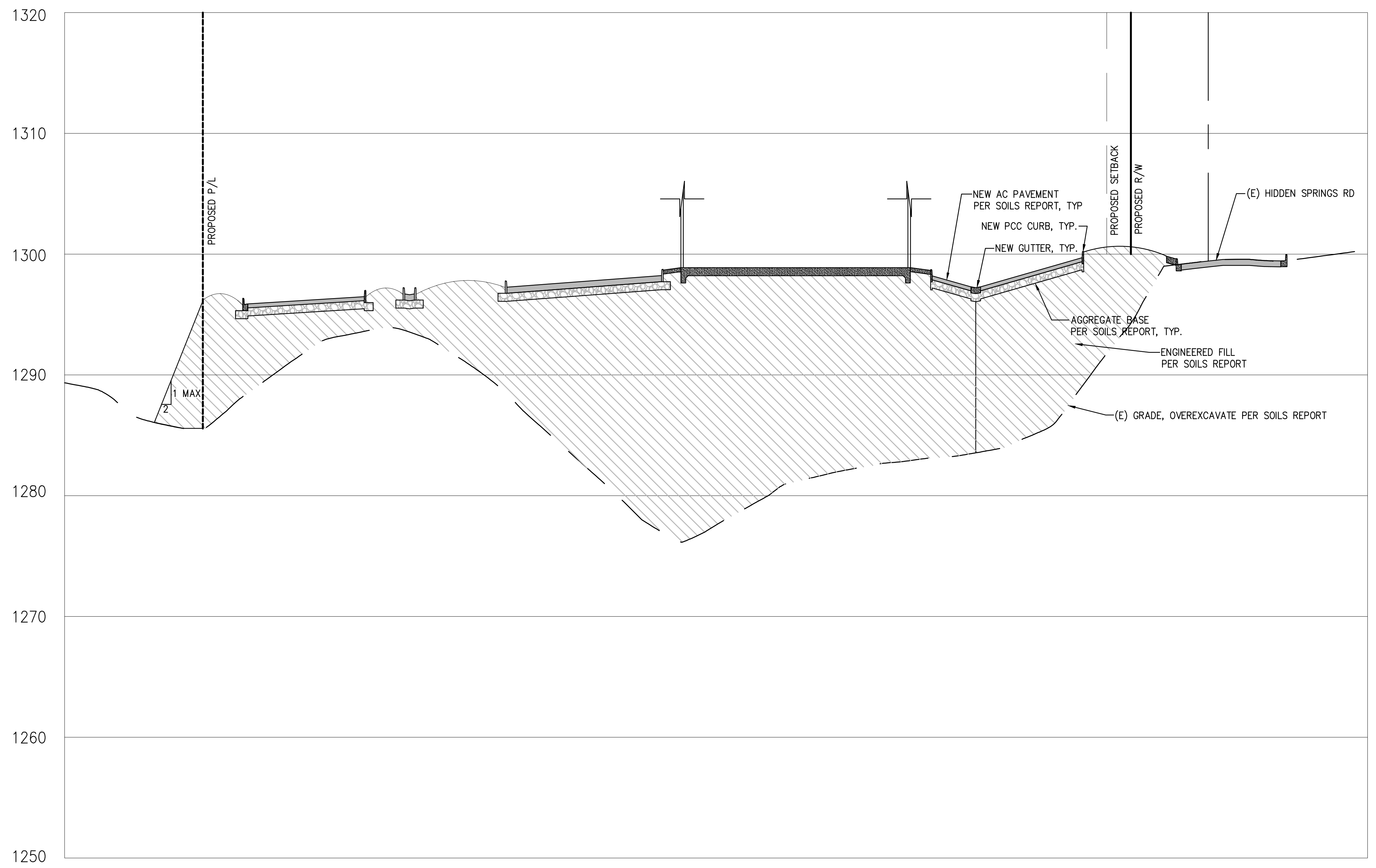
1320
1310
1300
1290
1280
1270
1260
1250
PROPOSED P/L
1 MAX
2
NEW AC PAVEMENT PER SOILS REPORT, TYP
NEW PCC CURB, TYP.
NEW GUTTER, TYP.
PROPOSED SETBACK
PROPOSED R/W
(E) HIDDEN SPRINGS RD
AGGREGATE BASE PER SOILS REPORT, TYP.
ENGINEERED FILL PER SOILS REPORT
(E) GRADE, OVEREXCAVATE PER SOILS REPORT

SECTION A–A

SCALE: HORIZ. 1" = 40'
VERT. 1" = 8'

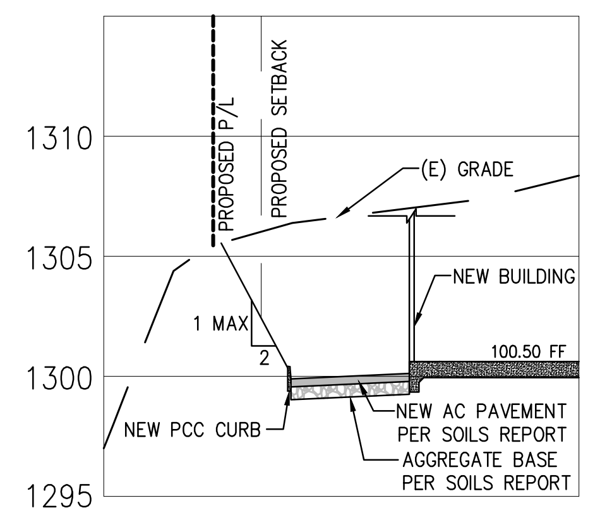
1310
1305
1300
1295
PROPOSED P/L
PROPOSED SETBACK
(E) GRADE
NEW BUILDING
1 MAX
2
100.50 FF
NEW PCC CURB
NEW AC PAVEMENT PER SOILS REPORT
AGGREGATE BASE PER SOILS REPORT

SECTION C–C

SCALE: HORIZ. 1" = 40'
VERT. 1" = 8'

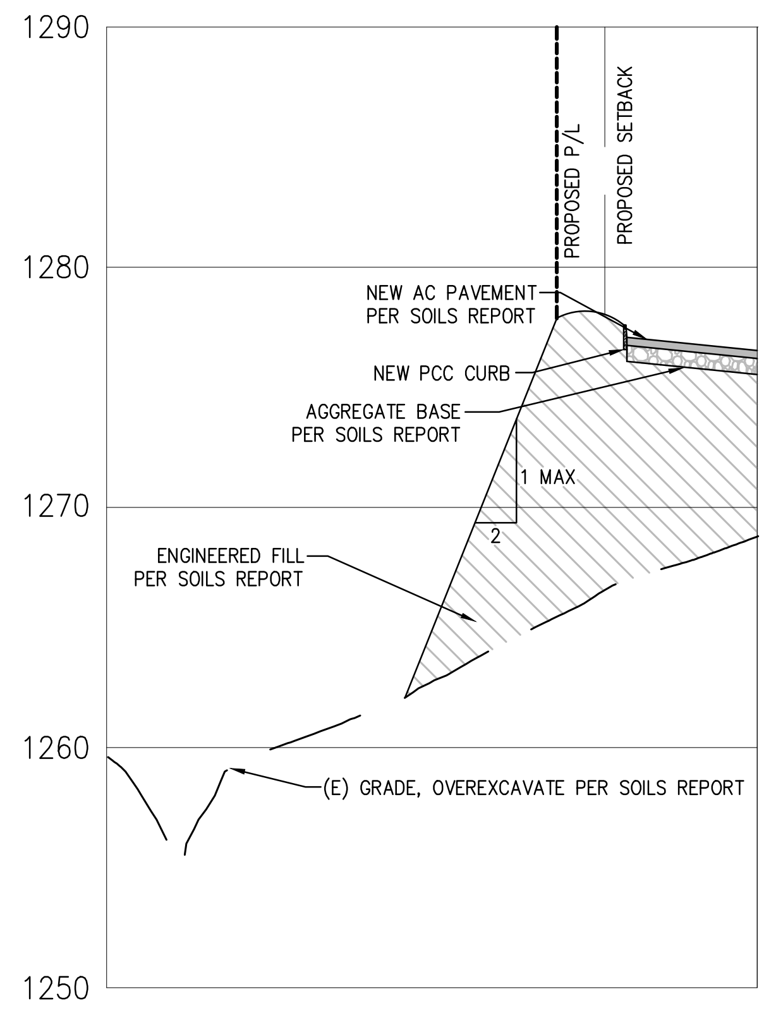
1290
1280
1270
1260
1250
PROPOSED P/L
PROPOSED SETBACK
NEW AC PAVEMENT PER SOILS REPORT
NEW PCC CURB
AGGREGATE BASE PER SOILS REPORT
1 MAX
2
ENGINEERED FILL PER SOILS REPORT
(E) GRADE, OVEREXCAVATE PER SOILS REPORT

SECTION D–D

SCALE: HORIZ. 1" = 40'
VERT. 1" = 8'

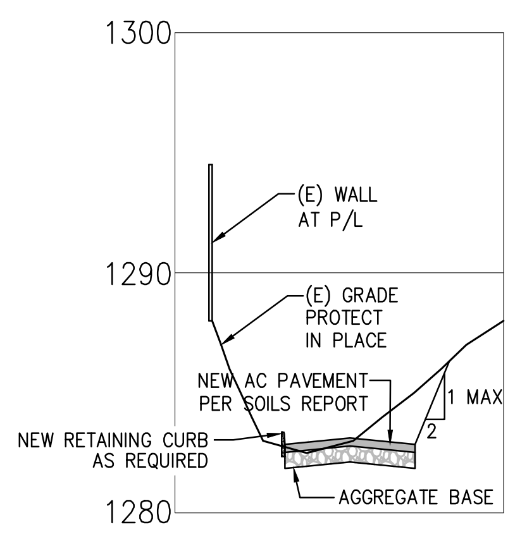
1300
1290
1280
(E) WALL AT P/L
(E) GRADE PROTECT IN PLACE
NEW AC PAVEMENT PER SOILS REPORT
NEW RETAINING CURB AS REQUIRED
1 MAX
2
AGGREGATE BASE

SECTION E–E

SCALE: HORIZ. 1" = 40'
VERT. 1" = 8'

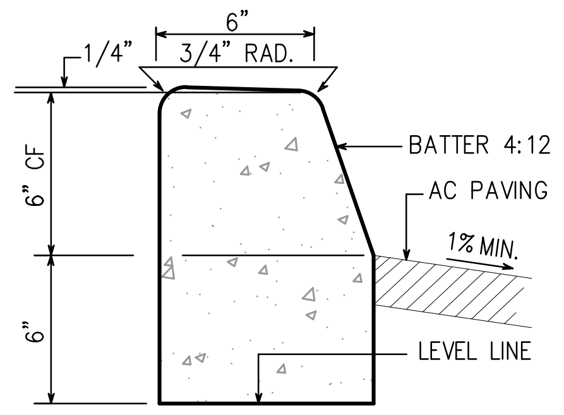
6"
3/4" RAD.
1/4"
6" CF
6"
BATTER 4:12
AC PAVING
1% MIN.
LEVEL LINE

(A) 6" PCC CURB TYP.

SPPWC STD 120–2, TYPE A1–6(150).
NTS

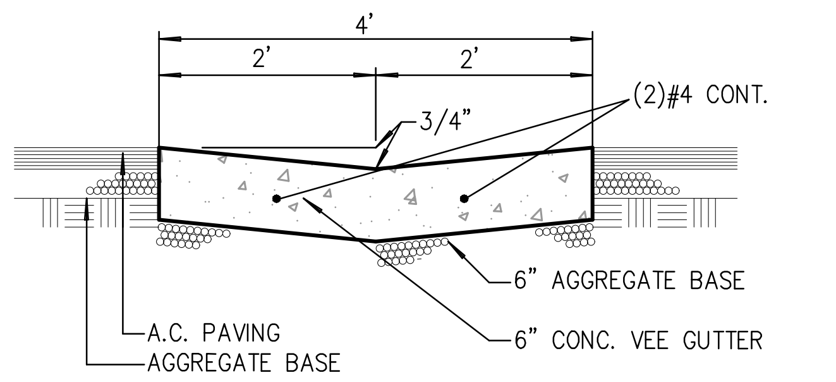
4'
2'
2'
3/4"
(2)#4 CONT.
6" AGGREGATE BASE
6" CONC. VEE GUTTER
A.C. PAVING
AGGREGATE BASE

(B) 4' RIBBON GUTTER

NTS

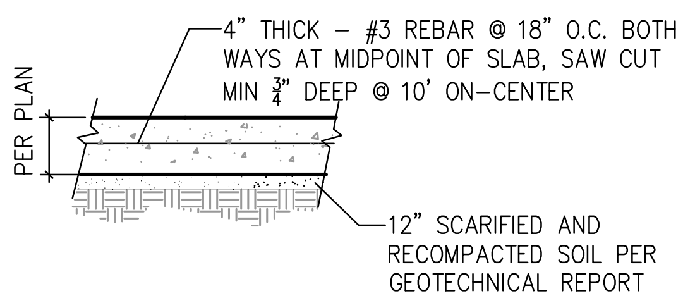
PER PLAN
4" THICK – #3 REBAR @ 18" O.C. BOTH WAYS AT MIDPOINT OF SLAB, SAW CUT MIN ¾" DEEP @ 10' ON–CENTER
12" SCARIFIED AND RECOMPACTED SOIL PER GEOTECHNICAL REPORT

(C) PCC PAVEMENT

NTS

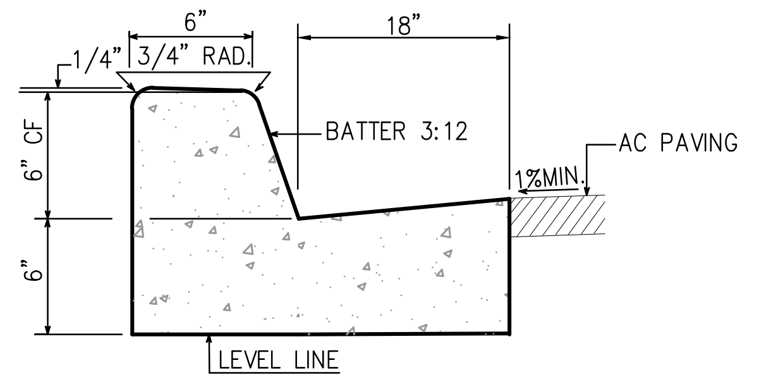
6"
3/4" RAD.
1/4"
18"
6" CF
6"
BATTER 3:12
AC PAVING
1%MIN.
LEVEL LINE

(D) 6" PCC CURB & GUTTER TYP.

SPPWC STD 120–2, TYPE A2–6(150).
NTS

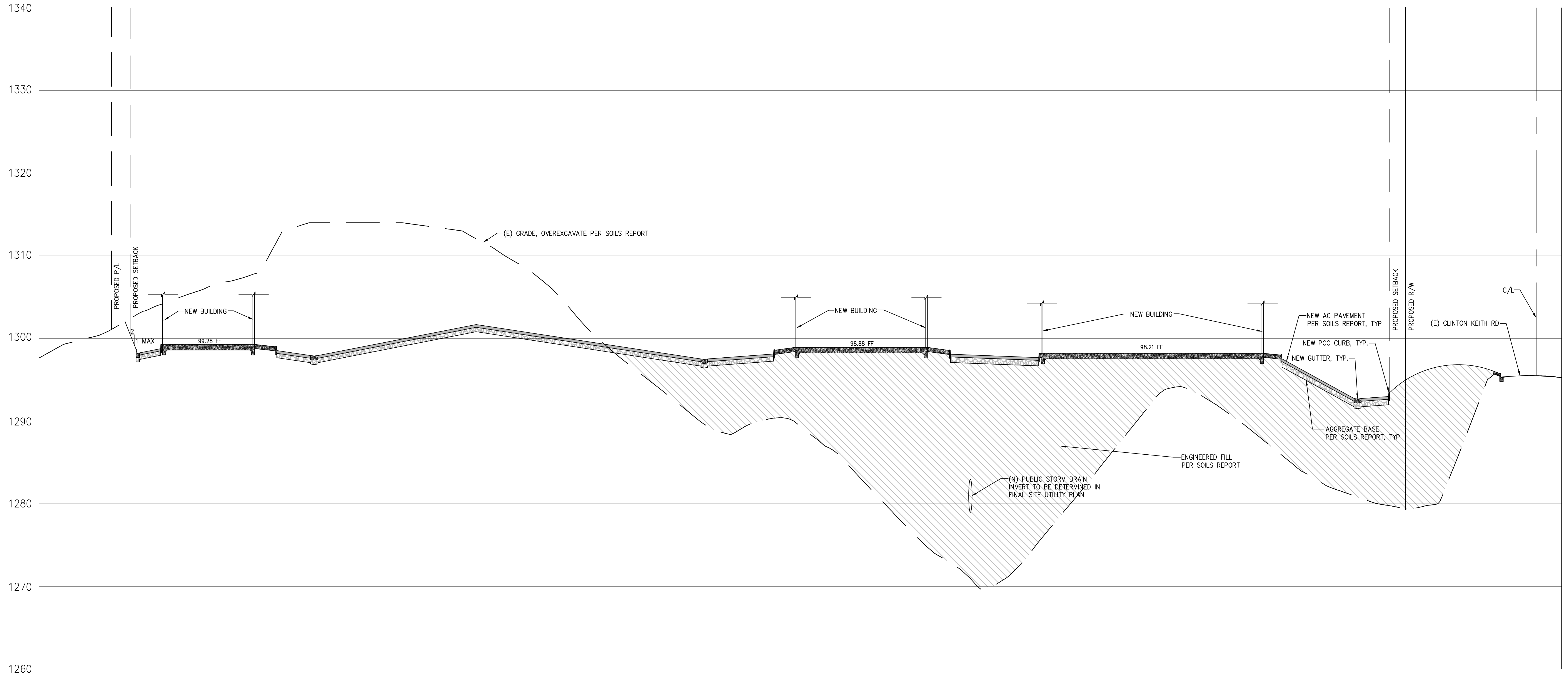
1340
1330
1320
1310
1300
1290
1280
1270
1260
PROPOSED P/L
PROPOSED SETBACK
2
1 MAX
NEW BUILDING
99.28 FF
(E) GRADE, OVEREXCAVATE PER SOILS REPORT
NEW BUILDING
98.88 FF
NEW BUILDING
98.21 FF
NEW AC PAVEMENT PER SOILS REPORT, TYP
NEW PCC CURB, TYP.
NEW GUTTER, TYP.
PROPOSED SETBACK
PROPOSED R/W
(E) CLINTON KEITH RD
C/L
AGGREGATE BASE PER SOILS REPORT, TYP.
ENGINEERED FILL PER SOILS REPORT
(N) PUBLIC STORM DRAIN INVERT TO BE DETERMINED IN FINAL SITE UTILITY PLAN

SECTION B–B

SCALE: HORIZ. 1" = 40'
VERT. 1" = 8'

PROJECT OWNER

SOMAR LAND GROUP, INC
16391 HARWICH CIRCLE
RIVERSIDE, CA, 92503
ATTN: MR. STEVE MACIE
(702) 497-3101

CONSULTANT

Duke Engineering
CIVIL & STRUCTURAL
LANCASTER - CALIFORNIA

44732 YUCCA AVENUE
LANCASTER, CA
661-952-7918

REVISIONS

No.	Revisions	By	Date

PROJECT

CLINTON KEITH MARKETPLACE

380-110-004,009,010,014,016
WILDOMAR, CA

ENGINEER OF RECORD

RYAN DUKE
C79729
9-30-22

SHEET TITLE

CONCEPTUAL SECTIONS

SHEET

C1.02

PROJECT: 19067

SHEET NO.

4

OF 11 SHEETS

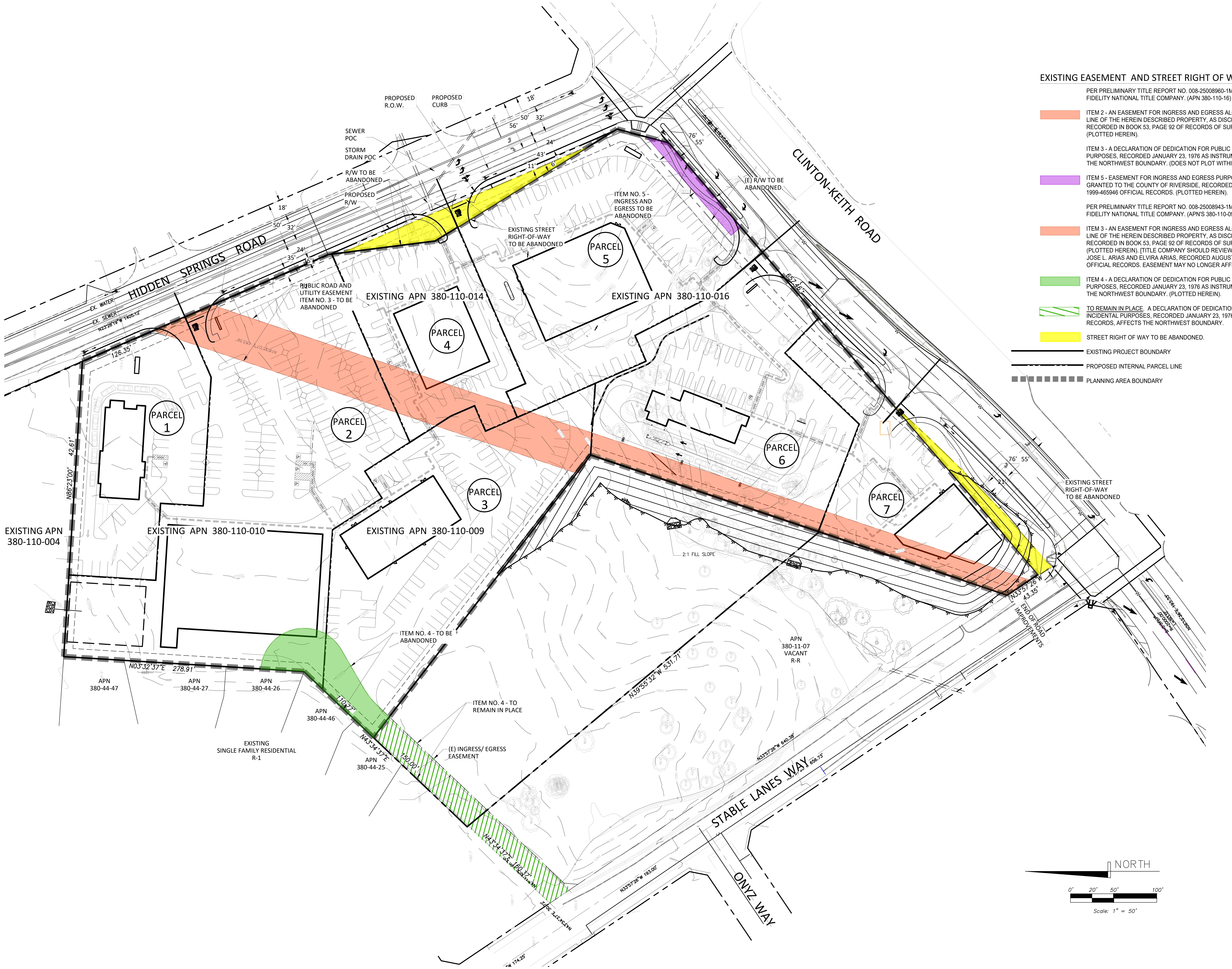
HIDDEN SPRINGS ROAD
CLINTON-KEITH ROAD
STABLE LANES WAY
ONYZ WAY
PROPOSED R.O.W.
PROPOSED CURB
SEWER POC
STORM DRAIN POC
R/W TO BE ABANDONED
PROPOSED R/W
18'
50'
32'
56'
24'
43'
11'
6'
35'
76'
55'
21'
EX. WATER
EX. SEWER
N23°28'19"W 1405.12'
126.35'
N86°23'00"
42.61'
N18°35'07"E 183.56'
PUBLIC ROAD AND UTILITY EASEMENT ITEM NO. 3 - TO BE ABANDONED
EXISTING STREET RIGHT-OF-WAY TO BE ABANDONED
ITEM NO. 5 - INGRESS AND EGRESS TO BE ABANDONED
(E) R/W TO BE ABANDONED.
PARCEL 1
PARCEL 2
PARCEL 3
PARCEL 4
PARCEL 5
PARCEL 6
PARCEL 7
EXISTING APN 380-110-014
EXISTING APN 380-110-016
EXISTING APN 380-110-004
EXISTING APN 380-110-010
EXISTING APN 380-110-009
657.46'
2:1 FILL SLOPE
N03°32'37"E 278.91'
APN 380-44-47
APN 380-44-27
APN 380-44-26
APN 380-44-46
APN 380-44-25
110.77'
N43°34'37"E
150.00'
EXISTING SINGLE FAMILY RESIDENTIAL R-1
ITEM NO. 4 - TO BE ABANDONED
ITEM NO. 4 - TO REMAIN IN PLACE
(E) INGRESS/ EGRESS EASEMENT
N39°55'32"W 531.71'
APN 380-11-07 VACANT R-R
N33°57'26"W 43.35'
END OF ROAD IMPROVEMENTS
N33°57'26"W 840.39'
N33°57'26"W 183.00'
N43°34'37"E 150.00'
N43°34'37"E 30.00'
EXISTING STREET RIGHT-OF-WAY TO BE ABANDONED
NORTH
0' 20' 50' 100'
Scale: 1" = 50'

EXISTING EASEMENT AND STREET RIGHT OF WAY ABANDONMENT LEGEND

	PER PRELIMINARY TITLE REPORT NO. 008-25008960-1MB, DATED JUNE 6, 2017, PREPARED BY FIDELITY NATIONAL TITLE COMPANY. (APN 380-110-16)
🟧	ITEM 2 - AN EASEMENT FOR INGRESS AND EGRESS ALONG A PORTION OF THE SOUTHEASTERLY LINE OF THE HEREIN DESCRIBED PROPERTY, AS DISCLOSED BY RECORD OF SURVEY MAP RECORDED IN BOOK 53, PAGE 92 OF RECORDS OF SURVEY, RIVERSIDE COUNTY RECORDS. (PLOTTED HEREIN).
	ITEM 3 - A DECLARATION OF DEDICATION FOR PUBLIC ROAD, PUBLIC UTILITY AND INCIDENTAL PURPOSES, RECORDED JANUARY 23, 1976 AS INSTRUMENT NO. 9637 OFFICIAL RECORDS, AFFECTS THE NORTHWEST BOUNDARY. (DOES NOT PLOT WITHIN THE SUBJECT PROPERTY).
🟪	ITEM 5 - EASEMENT FOR INGRESS AND EGRESS PURPOSES AS GRANTED IN A DOCUMENT GRANTED TO THE COUNTY OF RIVERSIDE, RECORDED OCTOBER 22, 1999, RECORDING NO: 1999-465946 OFFICIAL RECORDS. (PLOTTED HEREIN).
	PER PRELIMINARY TITLE REPORT NO. 008-25008943-1MB, DATED JUNE 6, 2017, PREPARED BY FIDELITY NATIONAL TITLE COMPANY. (APN'S 380-110-09; 10 AND 14).
🟧	ITEM 3 - AN EASEMENT FOR INGRESS AND EGRESS ALONG A PORTION OF THE SOUTHEASTERLY LINE OF THE HEREIN DESCRIBED PROPERTY, AS DISCLOSED BY RECORD OF SURVEY MAP RECORDED IN BOOK 53, PAGE 92 OF RECORDS OF SURVEY, RIVERSIDE COUNTY RECORDS. (PLOTTED HEREIN). [TITLE COMPANY SHOULD REVIEW THE EFFECT OF A QUITCLAIM EXECUTED BY JOSE L. ARIAS AND ELVIRA ARIAS, RECORDED AUGUST 28, 1984 AS INSTRUMENT NO. 188193 OF OFFICIAL RECORDS. EASEMENT MAY NO LONGER AFFECT THESE PARCELS]
🟩	ITEM 4 - A DECLARATION OF DEDICATION FOR PUBLIC ROAD, PUBLIC UTILITY AND INCIDENTAL PURPOSES, RECORDED JANUARY 23, 1976 AS INSTRUMENT NO. 9637 OFFICIAL RECORDS, AFFECTS THE NORTHWEST BOUNDARY. (PLOTTED HEREIN).
▨	TO REMAIN IN PLACE. A DECLARATION OF DEDICATION FOR PUBLIC ROAD, PUBLIC UTILITY AND INCIDENTAL PURPOSES, RECORDED JANUARY 23, 1976 AS INSTRUMENT NO. 9637 OFFICIAL RECORDS, AFFECTS THE NORTHWEST BOUNDARY.
🟨	STREET RIGHT OF WAY TO BE ABANDONED.
━	EXISTING PROJECT BOUNDARY
━ ‐ ━	PROPOSED INTERNAL PARCEL LINE
■■■■■	PLANNING AREA BOUNDARY

No.	REVISION DESCRIPTION	BY	DATE
△			
△			
△			
△			
△			
△			
△			

PACIFIC West
Life....Elevated by Design

EXISTING ON-SITE EASEMENT EXHIBIT
VESTING TENTATIVE PARCEL MAP NO. 37736
CLINTON KEITH MARKETPLACE
SEPTEMBER 1, 2021
WILDOMAR, CA

DESIGNED:	RD
DRAWN:	JS
CHECKED:	BC
SUPERVISED:	RD
DATE:	12-17-2021
SCALE:	1" = 50'
JOB NUMBER:	1012-001

ARCHITECTURAL CIVIL STRUCTURAL BUILD
CEI+B
CHALLMAN ENGINEERING INC+CEI BUILD INC
A DESIGN-BUILD COMPANY

WILLIAM J. CHALLMAN
No. 61872
Exp. 9-30-23

SHEET NO.
5
OF 11 SHEETS

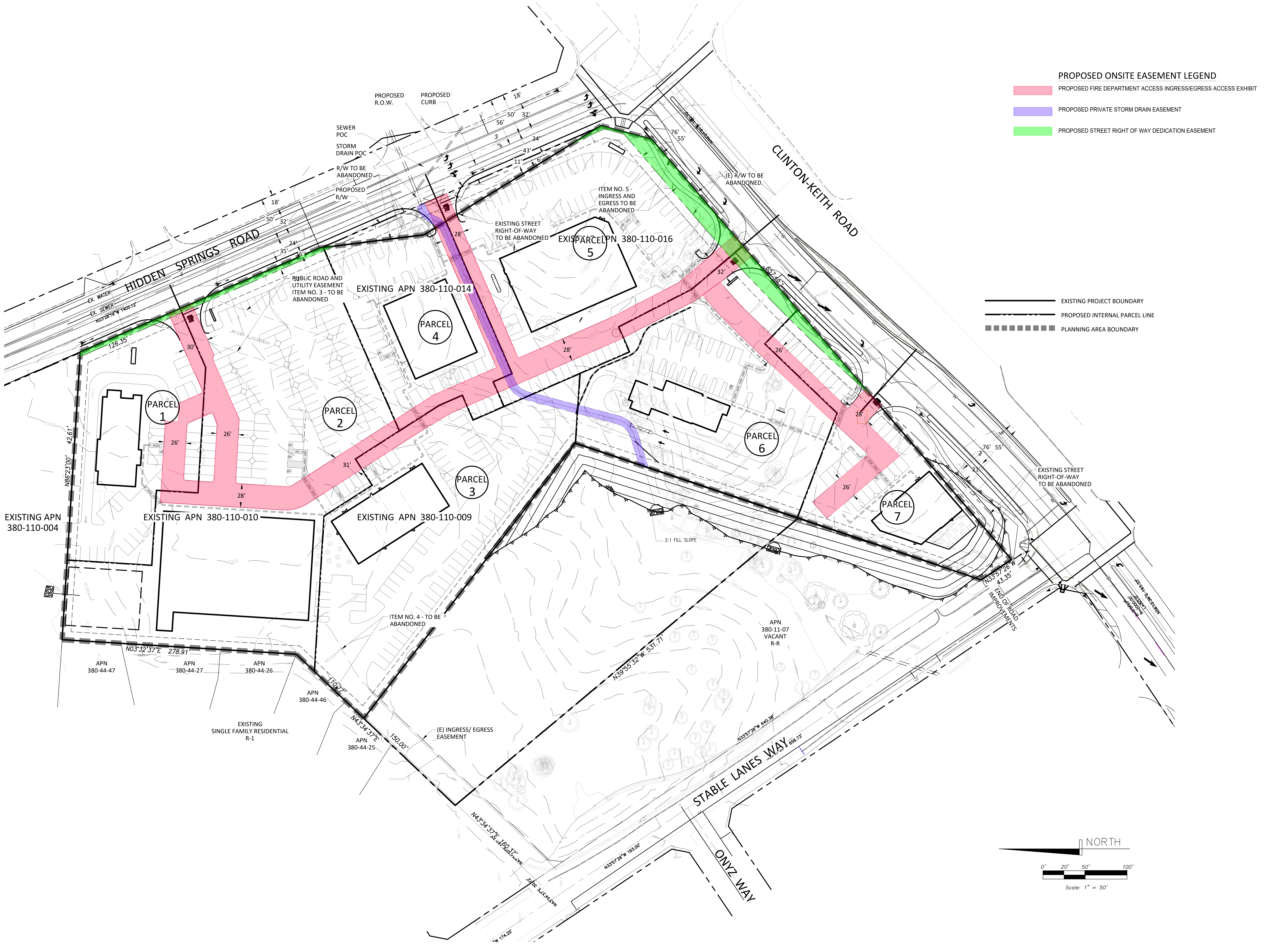

PROPOSED ONSITE EASEMENT LEGEND

🟥 PROPOSED FIRE DEPARTMENT ACCESS INGRESS/EGRESS ACCESS EXHIBIT

🟪 PROPOSED PRIVATE STORM DRAIN EASEMENT

🟩 PROPOSED STREET RIGHT OF WAY DEDICATION EASEMENT

— EXISTING PROJECT BOUNDARY

— PROPOSED INTERNAL PARCEL LINE

▬ ▬ ▬ PLANNING AREA BOUNDARY

HIDDEN SPRINGS ROAD
CLINTON-KEITH ROAD
STABLE LANES WAY
ONYZ WAY
PROPOSED R.O.W.
PROPOSED CURB
SEWER POC
STORM DRAIN POC
R/W TO BE ABANDONED
PROPOSED R/W
EX. WATER
EX. SEWER
N23°28'19"W 1405.12'
18'
50'
32'
56'
24'
43'
11'
6'
35'
76'
55'
(E) R/W TO BE ABANDONED.
ITEM NO. 5 - INGRESS AND EGRESS TO BE ABANDONED
EXISTING STREET RIGHT-OF-WAY TO BE ABANDONED
EXISTING APN 380-110-016
PARCEL 5
PUBLIC ROAD AND UTILITY EASEMENT ITEM NO. 3 - TO BE ABANDONED
EXISTING APN 380-110-014
PARCEL 4
28'
32'
657.46'
26'
126.35'
30'
PARCEL 1
PARCEL 2
26'
26'
31'
28'
PARCEL 3
PARCEL 6
PARCEL 7
28'
26'
21'
EXISTING STREET RIGHT-OF-WAY TO BE ABANDONED
EXISTING APN 380-110-004
EXISTING APN 380-110-010
EXISTING APN 380-110-009
N86°23'00" 42.61'
N18°35'07"E 183.56'
2:1 FILL SLOPE
N33°57'26"W 43.35'
END OF ROAD IMPROVEMENTS
ITEM NO. 4 - TO BE ABANDONED
APN 380-11-07 VACANT R-R
N39°55'32"W 531.71'
N03°32'37"E 278.91'
APN 380-44-47
APN 380-44-27
APN 380-44-26
APN 380-44-46
110.77'
N43°34'37"E
150.00'
APN 380-44-25
EXISTING SINGLE FAMILY RESIDENTIAL R-1
(E) INGRESS/ EGRESS EASEMENT
N33°57'26"W 840.38'
N43°34'37"E 180.37'
N33°57'26"W 183.00'
NORTH
0' 20' 50' 100'
Scale: 1" = 50'

No.	REVISION DESCRIPTION	BY	DATE
△			
△			
△			
△			
△			
△			
△			

PACIFIC West
Life....Elevated by Design

PROPOSED ON-SITE EASEMENT EXHIBIT
VESTING TENTATIVE PARCEL MAP NO. 37736
CLINTON KEITH MARKETPLACE
SEPTEMBER 1, 2021
WILDOMAR, CA

DESIGNED:	RD
DRAWN:	JS
CHECKED:	BC
SUPERVISED:	RD
DATE:	12-17-2021
SCALE:	1" = 50'
JOB NUMBER:	1012-001

ARCHITECTURAL CIVIL STRUCTURAL BUILD
CEI+B
CHALLMAN ENGINEERING INC+CEI BUILD INC
A DESIGN-BUILD COMPANY

WILLIAM J. CHALLMAN
No. 61872
Exp. 9-30-23

SHEET NO.
6
OF 11 SHEETS

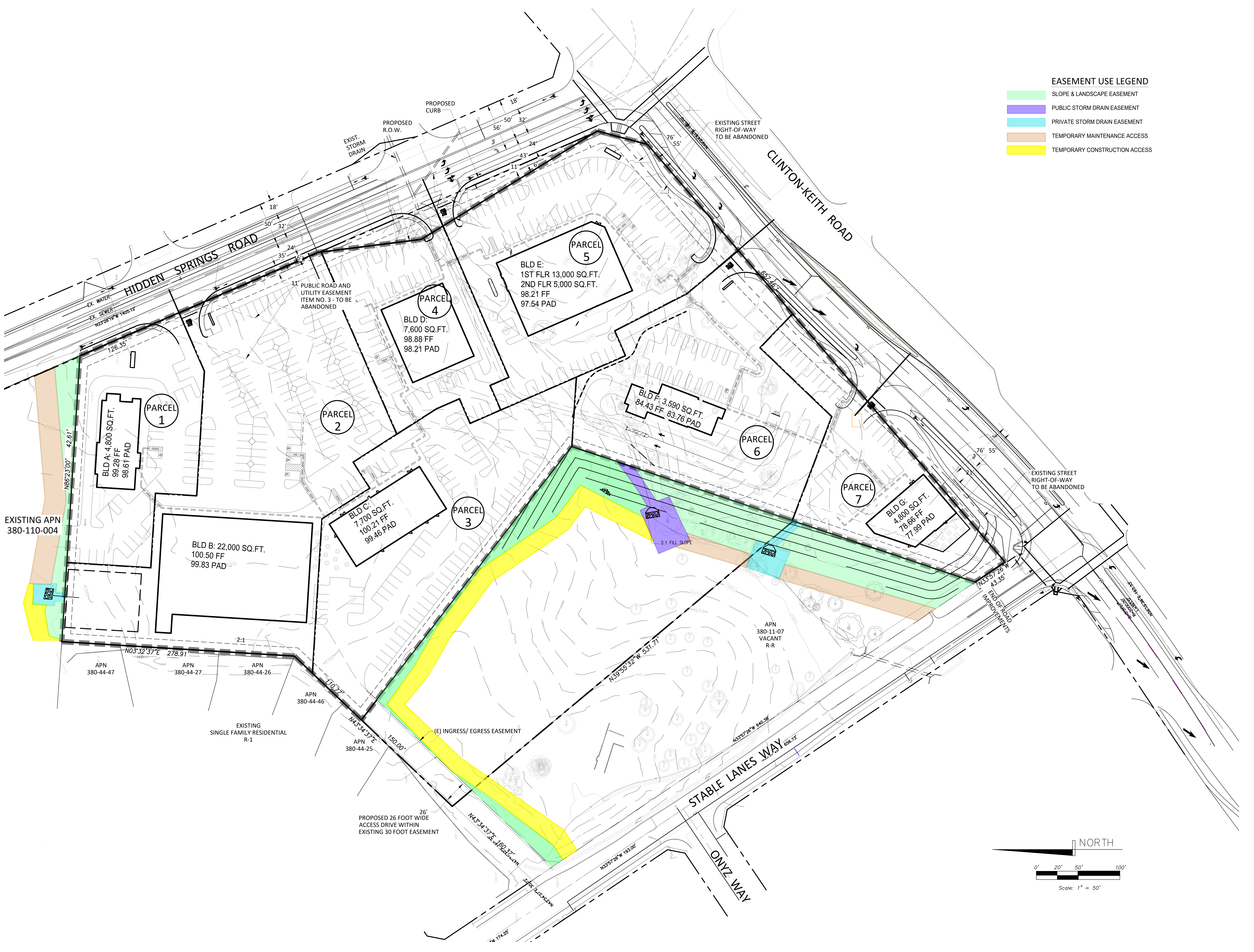
HIDDEN SPRINGS ROAD
CLINTON-KEITH ROAD
STABLE LANES WAY
ONYZ WAY
EX. WATER
EX. SEWER
N23°28'19"W 1405.12'
EXIST. STORM DRAIN
PROPOSED R.O.W.
PROPOSED CURB
EXISTING STREET RIGHT-OF-WAY TO BE ABANDONED
PUBLIC ROAD AND UTILITY EASEMENT ITEM NO. 3 - TO BE ABANDONED
PARCEL 1
BLD A: 4,800 SQ.FT.
99.28 FF
98.61 PAD
PARCEL 2
BLD B: 22,000 SQ.FT.
100.50 FF
99.83 PAD
PARCEL 3
BLD C: 7,700 SQ.FT.
100.21 FF
99.46 PAD
PARCEL 4
BLD D: 7,600 SQ.FT.
98.88 FF
98.21 PAD
PARCEL 5
BLD E: 1ST FLR 13,000 SQ.FT. 2ND FLR 5,000 SQ.FT.
98.21 FF
97.54 PAD
PARCEL 6
BLD F: 3,590 SQ.FT.
84.43 FF 83.76 PAD
PARCEL 7
BLD G: 4,800 SQ.FT.
78.66 FF
77.99 PAD
EXISTING APN 380-110-004
N86°23'00" 42.61'
126.35'
N03°32'37"E 278.91'
2:1
APN 380-44-47
APN 380-44-27
APN 380-44-26
APN 380-44-46
APN 380-44-25
110.77'
N43°34'37"E 150.00'
EXISTING SINGLE FAMILY RESIDENTIAL R-1
(E) INGRESS/ EGRESS EASEMENT
PROPOSED 26 FOOT WIDE ACCESS DRIVE WITHIN EXISTING 30 FOOT EASEMENT
26'
N43°34'37"E 150.37'
N39°55'32"W 531.71'
N33°57'26"W 840.38'
N33°57'26"W 183.00'
APN 380-11-07 VACANT R-R
2:1 FILL SLOPE
N33°57'26"W 43.35'
END OF ROAD IMPROVEMENTS
18'
50'
32'
24'
35'
6'
11'
56'
43'
76'
55'
NORTH
0' 20' 50' 100'
Scale: 1" = 50'

EASEMENT USE LEGEND

🟩 SLOPE & LANDSCAPE EASEMENT
🟪 PUBLIC STORM DRAIN EASEMENT
🟦 PRIVATE STORM DRAIN EASEMENT
🟫 TEMPORARY MAINTENANCE ACCESS
🟨 TEMPORARY CONSTRUCTION ACCESS

No.	REVISION DESCRIPTION	BY	DATE

PACIFIC West
Life....Elevated by Design

PROPOSED OFFSITE EASEMENT EXHIBIT
VESTING TENTATIVE PARCEL MAP NO. 37736
CLINTON KEITH MARKETPLACE
SEPTEMBER 1, 2021
WILDOMAR, CA

DESIGNED: RD
DRAWN: JS
CHECKED: BC
SUPERVISED: RD
DATE: 12-17-2021
SCALE: 1" = 50'
JOB NUMBER: 1012-001

CEI+B
CHALLMAN ENGINEERING INC+CEI BUILD INC
A DESIGN-BUILD COMPANY

WILLIAM J. CHALLMAN
No. 61872
Exp. 9-30-23

SHEET NO.
7
OF 11 SHEET

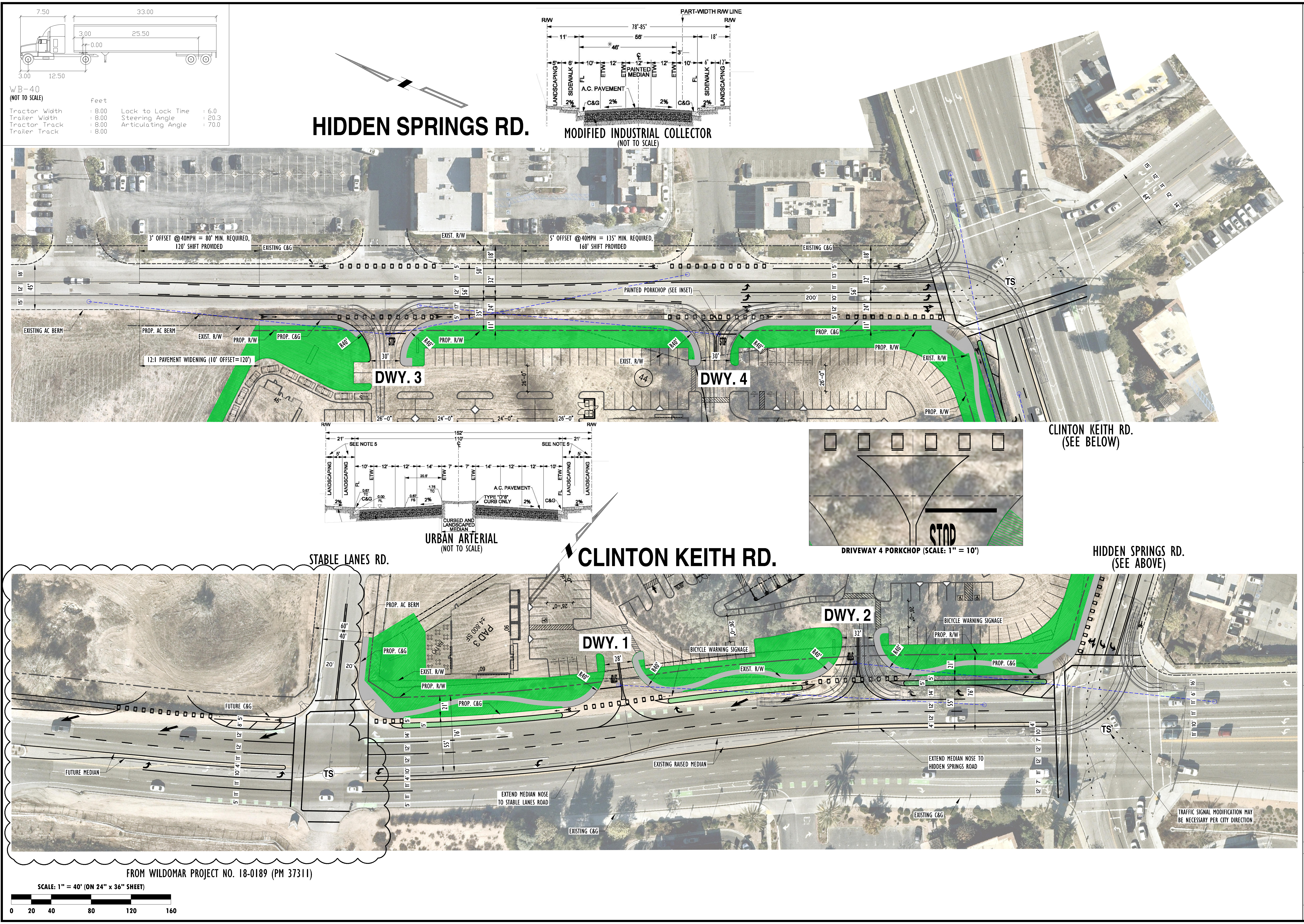
7.50
33.00
3.00
25.50
0.00
3.00
12.50
WB-40
(NOT TO SCALE)
feet
Tractor Width : 8.00
Trailer Width : 8.00
Tractor Track : 8.00
Trailer Track : 8.00
Lock to Lock Time : 6.0
Steering Angle : 20.3
Articulating Angle : 70.0
HIDDEN SPRINGS RD.
PART-WIDTH R/W LINE
R/W
R/W
78'-85'
11'
56'
18'
*46'
3'
5'
6'
10'
12'
12'
12'
10'
6'
12'
LANDSCAPING
SIDEWALK
FL
ETW
ETW
PAINTED MEDIAN
ETW
ETW
FL
SIDEWALK
LANDSCAPING
A.C. PAVEMENT
2%
C&G
2%
2%
C&G
2%
MODIFIED INDUSTRIAL COLLECTOR
(NOT TO SCALE)
3' OFFSET @40MPH = 80' MIN. REQUIRED, 120' SHIFT PROVIDED
EXISTING C&G
EXIST. R/W
5' OFFSET @40MPH = 135' MIN. REQUIRED, 160' SHIFT PROVIDED
EXISTING C&G
PAINTED PORKCHOP (SEE INSET)
200'
EXISTING AC BERM
PROP. AC BERM
EXIST. R/W
PROP. R/W
PROP. C&G
12:1 PAVEMENT WIDENING (10' OFFSET=120')
R40'
30'
STOP
R40'
PROP. R/W
R40'
EXIST. R/W
44
DWY. 3
DWY. 4
30'
STOP
R40'
PROP. C&G
PROP. R/W
EXIST. R/W
PROP. R/W
TS
26'-0"
24'-0"
24'-0"
26'-0"
R/W
R/W
152'
110'
21'
21'
SEE NOTE 5
SEE NOTE 5
5'
5'
10'
12'
12'
14'
7'
7'
14'
12'
12'
10'
20.5'
LANDSCAPING
LANDSCAPING
FL
ETW
ETW
ETW
ETW
FL
LANDSCAPING
LANDSCAPING
0.67 TC
C&G
0.00 FL
0.67 FS
1.75 TC
2%
2%
TYPE "D"8" CURB ONLY
A.C. PAVEMENT
2%
C&G
2%
CURBED AND LANDSCAPED MEDIAN
URBAN ARTERIAL
(NOT TO SCALE)
CLINTON KEITH RD. (SEE BELOW)
STOP
DRIVEWAY 4 PORKCHOP (SCALE: 1" = 10')
STABLE LANES RD.
CLINTON KEITH RD.
HIDDEN SPRINGS RD. (SEE ABOVE)
PROP. AC BERM
PAD 3
±4,000 SF
60'
40'
20'
20'
PROP. C&G
EXIST. R/W
PROP. R/W
R40'
PROP. C&G
21'
FUTURE C&G
DWY. 1
28'
R40'
BICYCLE WARNING SIGNAGE
EXIST. R/W
R40'
DWY. 2
32'
R40'
BICYCLE WARNING SIGNAGE
PROP. R/W
PROP. C&G
21'
TS
TS
55'
76'
55'
76'
FUTURE MEDIAN
EXISTING RAISED MEDIAN
EXTEND MEDIAN NOSE TO STABLE LANES ROAD
EXTEND MEDIAN NOSE TO HIDDEN SPRINGS ROAD
EXISTING C&G
EXISTING C&G
TRAFFIC SIGNAL MODIFICATION MAY BE NECESSARY PER CITY DIRECTION
FROM WILDOMAR PROJECT NO. 18-0189 (PM 37311)
SCALE: 1" = 40' (ON 24" x 36" SHEET)
0
20
40
80
120
160

14082-WildomarCommons_B3.dwg - 1/3/22 - DG

CONSULTANT

URBAN CROSSROADS
www.urbanXroads.com
TELEPHONE: 949-660-1994

No.	REVISION DESCRIPTION
△	
△	
△	
△	
△	
△	
△	

CLINTON KEITH MARKETPLACE
JANUARY 3, 2022
WILDOMAR, CA

ENGINEER OF RECORD

JOSE ALIRE
No. 2058
Exp. 6/30/22

SHEET TITLE

HIDDEN SPRINGS ROAD & CLINTON KEITH ROAD CONCEPT STRIPING

SHEET NO.

8

OF 11 SHEET

HIDDEN SPRINGS RD. (40 MPH)

LIMITED USE AREA PER RIVERSIDE COUNTY
STANDARD NO. 821 - INTERSECTION SIGHT DISTANCE

LIMITED USE AREA PER RIVERSIDE COUNTY
STANDARD NO. 821 - INTERSECTION SIGHT DISTANCE

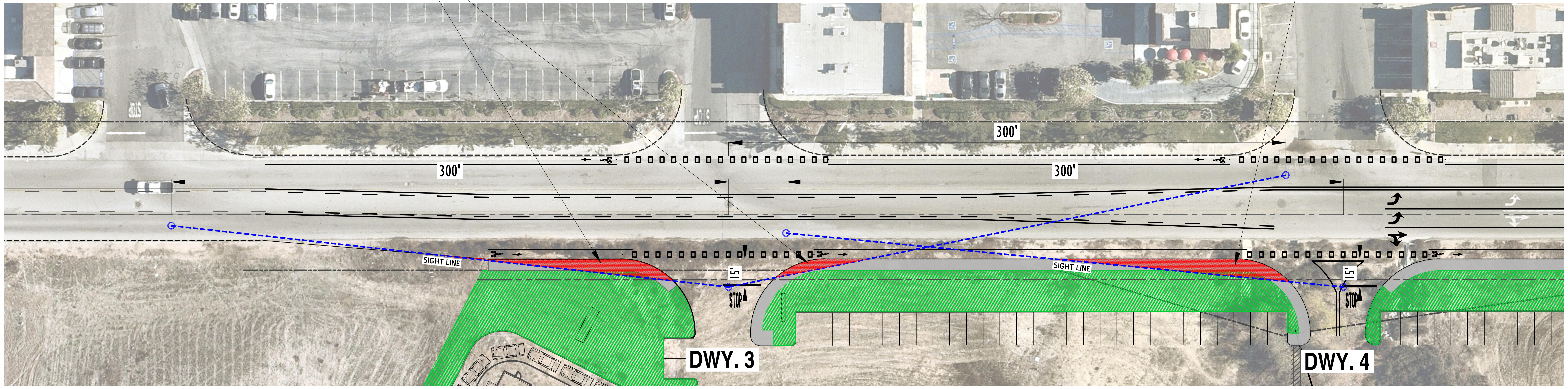
300'
300'
300'
SIGHT LINE
SIGHT LINE
15'
15'
STOP
STOP
DWY. 3
DWY. 4

CLINTON KEITH RD. (45 MPH)

LIMITED USE AREA PER RIVERSIDE COUNTY
STANDARD NO. 821 - INTERSECTION SIGHT DISTANCE

LIMITED USE AREA PER RIVERSIDE COUNTY
STANDARD NO. 821 - INTERSECTION SIGHT DISTANCE

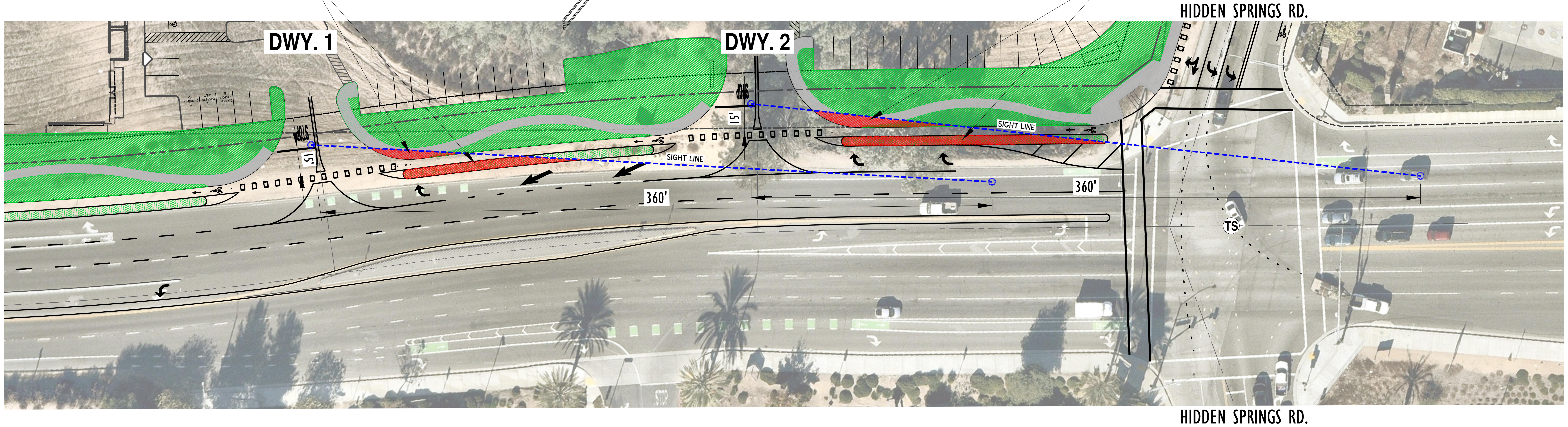
HIDDEN SPRINGS RD.
DWY. 1
DWY. 2
15'
15'
SIGHT LINE
SIGHT LINE
360'
360'
TS
HIDDEN SPRINGS RD.

SCALE: 1" = 30' (ON 24" x 36" SHEET)
0 15 30 60 90 120

14082-WildomarCommons_SD3.dwg - 1/3/22 - DG

CONSULTANT

URBAN | CROSSROADS
www.urbanXroads.com
TELEPHONE: 949-660-1994

No. REVISION DESCRIPTION

CLINTON KEITH MARKETPLACE
JANUARY 3, 2022
WILDOMAR, CA

ENGINEER OF RECORD

JOSE ALIRE
No. 2058
Exp. 6/30/22
TRAFFIC

SHEET TITLE

HIDDEN SPRINGS ROAD & CLINTON KEITH ROAD INTERSECTION SIGHT DISTANCE

SHEET NO.

9

OF 11 SHEET

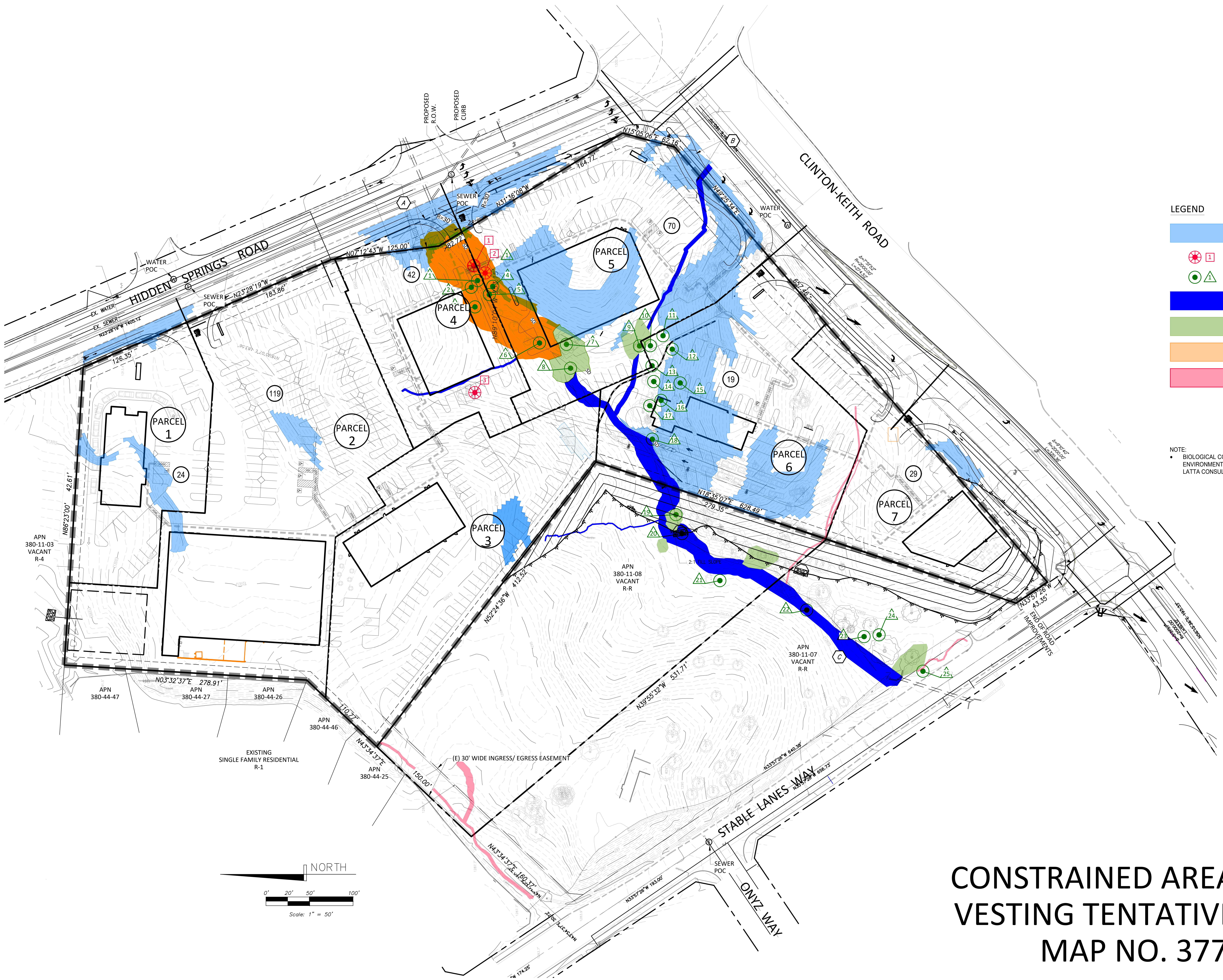
HIDDEN SPRINGS ROAD
CLINTON-KEITH ROAD
STABLE LANES WAY
ONYX WAY
PROPOSED R.O.W.
PROPOSED CURB
WATER POC
SEWER POC
EX. WATER
EX. SEWER
PARCEL 1
PARCEL 2
PARCEL 3
PARCEL 4
PARCEL 5
PARCEL 6
PARCEL 7
N07°12'43"W 125.00'
N23°28'19"W 183.86'
N15°05'06"E 62.16'
N31°36'08"W
164.72'
N49°25'34"E
657.46'
N18°35'07"E 279.35' 628.49'
N33°57'26"W 43.35'
N52°24'36"W 412.52'
N39°55'32"W 531.71'
N86°23'00" 42.61'
126.35'
N03°32'37"E 278.91'
110.72'
N43°34'37"E 150.00'
R=30'
82.72'
APN 380-11-03 VACANT R-4
APN 380-44-47
APN 380-44-27
APN 380-44-26
APN 380-44-46
APN 380-44-25
APN 380-11-08 VACANT R-R
APN 380-11-07 VACANT R-R
EXISTING SINGLE FAMILY RESIDENTIAL R-1
(E) 30' WIDE INGRESS/ EGRESS EASEMENT
END OF ROAD IMPROVEMENTS
NORTH
0' 20' 50' 100'
Scale: 1" = 50'

LEGEND

🟦	SLOPE OVER 25%
✳ 1	COTTONWOOD TREES & TREE NUMBER
● △1	OAK TREES & TREE NUMBER
🟦	STREAMBED
🟩	OAK WOODLAND
🟧	SOUTHERN WILLOW SCRUB
🟥	EROSIONAL FEATURE - NONE VEGETATED CHANNEL

NOTE:
- BIOLOGICAL CONSTRAINTS IDENTIFIED PER HELIX ENVIRONMENTAL BIOLOGICAL REPORT AND REBECA LATTA CONSULTING ARBORIST REPORT.

CONSTRAINED AREA EXHIBIT VESTING TENTATIVE PARCEL MAP NO. 37736

No.	REVISION DESCRIPTION	BY	DATE

PACIFIC West
Life....Elevated by Design

CONSTRAINED AREA EXHIBIT
VESTING TENTATIVE PARCEL MAP NO. 37736
WILDOMAR COMMONS AT HIDDEN SPRINGS
SEPTEMBER 1, 2021
WILDOMAR, CA

DESIGNED:	RD
DRAWN:	JS
CHECKED:	BC
SUPERVISED:	RD
DATE:	12-17-2021
SCALE:	1" = 50'
JOB NUMBER:	1012-001

ARCHITECTURAL CIVIL STRUCTURAL BUILD
CEI+B
CHALLMAN ENGINEERING INC+CEI BUILD INC
A DESIGN-BUILD COMPANY

WILLIAM J. CHALLMAN
No. 61872
Exp. 9-30-23

SHEET NO.
10
OF 11 SHEETS

SUBDIVISION APPLICATION

REQUIRED SUBMITTAL
INFORMATION REFERENCE CHART

City of Wildomar, Planning Department Tract Map & Parcel Map Application, Pages 8 thru 10,

Subdivision Application Requirements as reflected in Vesting tentative Parcel Map 37726

Tentative Parcel Map - Required Information Description	Status	Applicable VTPM Pages
Page 8		
Name, address and telephone number of applicant.	X	1
Name, address and telephone number of landowner.	X	1
Name, address and telephone number of exhibit preparer.	X	1
Assessor's Parcel Number(s) and, if available the address of property.	X	1
Scale (number of feet per inch - use Engineer's Scale for all maps and exhibits).	X	All plan sheets
North Arrow.	X	All plan sheets
Date tentative map or exhibit prepared.	X	All Title Blocks
Map Number.	X	All Title Blocks
Title of Map.	X	All plan sheets
Proposed improvement schedule (i.e. Schedule "A", "B", "C", etc.).	NA	NA
Map book and page numbers of adjoining recorded land divisions.	X	2
Complete legal description of property.	X	1
Overall dimensions and approximate total of net and gross acreage of property.	X	2
Vicinity map, showing the site relationship to major highways and cities and two access roads (Proposed and existing paved roads will be indicated by heavy dark lines or noted as paved).	X	1
Exhibit Revision Block.	X	All Title Blocks
Thomas Brothers map page and coordinates (Indicate edition year used).	X	1
Land division boundary line.	X	2
Proposed lot lines and dimensions of each parcel.	X	2
Net lot size, for each lot.	X	2
Gross lot size, for each lot 2 acres and larger in size.	X	2
Location of adjoining properties and lot lines.	X	2
A statement indicating that the tentative map includes the entire contiguous ownership of the land divider or only a portion thereof.	X	1
Existing and proposed zoning and land use of property.	X	1

Tentative Parcel Map - Required Information Description	Status	Applicable VTPM Pages
Page 9		
Existing use and zoning of property immediately surrounding subject property.	X	2
If project is within a Specific Plan, indicate the Specific Plan Planning Area number and the land use designation of subject property and all surrounding property.	NA	NA
Names of utility purveyors and school district(s), including providers of water, sewer, gas, electricity, telephone, and cable television.	X	1
Location, widths, and improvements of existing and proposed public utility easements, transmission lines, power and telephone poles, and underground utilities on or abutting the property.	X	4
Names, locations, right-of-way widths, and improvements of adjacent existing and proposed streets and the approximate grades of proposed and existing streets and approximate street centerline radii of curbs. If private streets are proposed, they shall be so noted on the tentative map.	X	7
Proposed names of streets without current names.	NA	NA
List and accurately show all easements of record (by map or instrument number).	X	4
Streets, alleys, and rights-of-way providing legal access to the property.	X	4
Typical street improvement cross-sections.	X	1
Label and describe any land or right-of-way to be dedicated to public or other uses.	X	5
Any known existing wells on the property or within 200 feet of the property boundary.	NONE	NA
Existing topography of the property, with the source(s) of the contour lines identified. The contour lines shall extend at least 300 feet beyond the exterior boundaries of the subject property when adjacent property is unimproved or vacant. When adjacent property is improved or not vacant, contour lines shall extend beyond the exterior boundaries of the subject property a distance sufficient to determine compatibility with adjacent property. Maximum contour interval should be five feet. Topography shall be based upon information no older than three years from the date of application and shall be dated and signed by the engineer or land surveyor.	X	3
Preliminary Grading including all cut/fill slopes to scale with slope ratios and slope setbacks from structures and property lines, the elevations of all individual building pads, the elevations at the perimeter of the subdivision, conceptual drainage facilities (including the location of terraces, terrace drains, brow ditches, V-ditches, and lot to lot drainage facilities), existing topography and the relationship to adjoining land and development, and any existing grading.	X	3
Spot elevations.	X	3

Tentative Parcel Map - Required Information Description	Status	Applicable VTPM Pages
Page 10		
When subsurface septic sewage disposal is intended, include the information described on Page 5 under, "Site Grading, Subsurface Disposal."	NA	NA
Note whether or not land is subject to liquefaction, or other geologic hazards, or is within a Special Studies Zone.	NONE	NA
Note whether or not land is subject to overflow, inundation, or flood hazards.		1
FEMA mapped floodplains and including zone designations		1
Drainage plan. (See description of Drainage Plan on Page 6).	X	See separate preliminary Hydrology
Centerline curve radii and typical selections of all open channels.	NONE	
Identify proposed parking spaces.		See separate Architectural Site Plan
Numbered mobile home or recreational vehicle spaces, dwelling units, or lots, and the total number of each type of space, unit, or lot.	NA	NA
Labeled Common areas, open space, and recreational areas with location, dimensions, acreage, and known proposed uses, and name of proposed owner(s) or entity(ies) who will maintain these areas.		See separate Conceptual Landscape Plan
Location, dimensions, setbacks, and nature of any proposed and all fences, gates, walls, free-standing signs, driveways, turnouts and/or turnarounds, curbs, drainage structures, and above and below ground structures, including subsurface disposal systems.		See separate Architectural Site Plan
Location and dimensions of existing and proposed ingress and egress, and methods of vehicular circulation.	X	7
Location and dimensions of existing dwellings, buildings or other structures, labeled as existing and indicating whether they are to remain or be removed.	NONE	NA
Location, dimensions, and height of proposed dwellings, buildings or other structures, labeled as proposed.		See separate Architectural Site Plan
Setback dimensions of existing structures and paved areas.		See separate Architectural Site Plan
For residential project in the R-2 Zone, Residential Single-Family Residential Subdivision, condominium, or attached residential projects: building footprints, floor plan assignments, proposed setbacks, pad elevations, street grades, and all cut and fill slopes in excess of one foot in vertical height.	NA	NA
To show compliance with the City's Water Quality Management Plan, water quality features or a note describing the site's water quality features shall be shown.		3 and see separate conceptual LID Plan

No.	REVISION DESCRIPTION	BY	DATE

PACIFIC West
Life....Elevated by Design

VESTING TENTATIVE PARCEL MAP NO. 37736
CLINTON KEITH MARKETPLACE
SEPTEMBER 1, 2021
WILDOMAR, CA

DESIGNED: RD
DRAWN: JS
CHECKED: BC
SUPERVISED: RD
DATE: 12-17-2021
SCALE: 1" = 50'
JOB NUMBER: 1012-001

CEI+B
CHALLMAN ENGINEERING INC+CEI BUILD INC
A DESIGN-BUILD COMPANY

WILLIAM J. CHALLMAN
No. 61872
Exp. 9-30-23
CIVIL

SHEET NO.
11
OF 11 SHEETS