LOW IMPACT DEVELOPMENT PLAN

GLENELDER – VESTING TENTATIVE TRACT MAP NO. 82159

Project Address:
16234 Folger Street

Prepared for:

LENNAR

15131 Alton Parkway, Suite 365
Irvine, CA 92618

Prepared by:

Hunsaker & Associates Irvine, Inc.
3 Hughes
Irvine, CA 92618
(949) 583-1010

Preparation Date:
January 29, 2016
Revised: May 28, 2019

W.O. 3916-28X

W.O. 3916-28X

LOW IMPACT DEVELOPMENT PLAN

"GLENELDER"

City of Hacienda Heights, CA

LOW IMPACT DEVELOPMENT (LID) PLAN

"GLENELDER" – VESTING TENTATIVE TRACT MAP NO. 82159

16234 FOLGER STREET

City of Hacienda Heights, County of Los Angeles

PREPARED FOR:

LENNAR

15131 ALTON PARKWAY, SUITE 365
IRVINE, CA 92618

SUBMITTED TO:
COUNTY OF LOS ANGELES
900 S. FREMONT AVENUE
ALHAMBRA, CA 91803
(626) 458-5100

PREPARED BY:

HUNSAKER & ASSOCIATES IRVINE, INC.
3 HUGHES
IRVINE, CA 92618
(949) 583-1010

DECEMBER 17, 2018
REVISED: MAY 28, 2019

W.O. 3916-28X

Engineer's Certification
Low Impact Development (LID) Plan

Preparer (Engineer) Certification			
Preparer (Engineer): Shawn Yu			
Title	Project Engineer	PE Registration #	
Company	Hunsaker & Associates Irvine, Inc.		
Address	3 Hughes, Irvine, CA 92618		
Email	syu@hunsaker.com		
Telephone #	949-583-1010		
I HEREBY CERTIFY THAT THIS LOW IMPACT DEVELOPMENT (LID) PLAN IS IN COMPLIANCE WITH THE REQUIREMENTS SET FORTH IN ORDER NO. R4-2012-0175/NPDES NO. CAS004001 OF THE LOS ANGELES REGIONAL WATER QUALITY CONTROL BOARD. I certify under penalty of law that this document and all attachments were prepared under my jurisdiction or supervision in accordance with a system designed to assure that qualified personnel properly gather and evaluate the information submitted. Based on my inquiry of the person or persons who manage the system or those persons directly responsible for gathering the information, to the best of my knowledge and belief, the information submitted is true, accurate, and complete. I am aware that there are significant penalties for submitting false information, including the possibility of fine and imprisonment for knowing violations			
Preparer Signature		Date	
Place Stamp Here			

Table of Contents

Section Page

LID NOTES: i

I. LID Requirements and Project Description 1

A. LID Background 1
B. Designated Project Categories 1
C. Site Description 2
D. Project Description 3
E. Geotechnical Conditions 3
F. Watershed Area and Drainage Conditions 4
G. Other Site Considerations 4
H. Receiving Water Impairments 4
I. Pollutants of Concern 6

II. BEST MANAGEMENT PRACTICES (BMP's) 7

A. Site Design Principles 7
B. Source Control Measures 8
D. Storm Water Quality Design Volume (SWQDv) 10
E. Storm Water Quality Control Measures 10
F. Hydromodification Requirements 11

III. Storm Water Quality Control Measure Maintenance 12

ATTACHMENTS 33

ATTACHMENT A VICINITY MAP 34
ATTACHMENT B SITE PLAN 35
ATTACHMENT C BMP CALCULATIONS 36
ATTACHMENT D OPERATION & MAINTENANCE PLAN 39
ATTACHMENT E BMP INSPECTION MAINTENANCE RECORDS 43
ATTACHMENT F EDUCATIONAL MATERIALS 44

LID NOTES:

1. Determine and provide the pre and post development pervious and impervious areas created by the proposed development.

POST DEVELOPMENT					
Impervious Area	5.5	Acres	Percent Impervious	55	%
Pervious Area	4.5	Acres	Percent Pervious	45	%
PRE DEVELOPMENT					
Impervious Area	3.5	Acres	Percent Impervious	36	%
Pervious Area	6.4	Acres	Percent Pervious	64	%

2. Any modifications to the approved Low Impact Development (LID) report must be resubmitted to the City for approval.
3. A copy of the approved Low Impact Development (LID) report must be in the possession of a responsible person and available at the site at all times.
4. All structural BMP's shall be accessible for inspection and maintenance.
5. Prior to commencement of any work for connection to County maintained storm drain, an encroachment permit from L.A. County Construction Division, Permit Section is required (626) 458-3129.
6. Prior to commencement of any work and/or discharge of drainage to a jurisdictional watercourse, a permit from both the California Department of Fish and Game and U.S. Army Corps of Engineers may be required.

I. LID Requirements and Project Description

A. LID Background

In 1987, The Federal Water Pollution Control Act (also referred to as the Clean Water Act [CWA] was amended to provide that the discharge of pollutants to waters of the United States from stormwater is effectively prohibited, unless the discharge is in compliance with a National Pollutant Discharge Elimination System (NPDES) Permit. The 1987 amendments to the CWA added Section 402 (p), which established a framework for regulating municipal, industrial and construction stormwater discharges under the NPDES program. In California, these permits are issued through the State Water Resources Control Board – (SWRCB) and the nine Regional Water Quality Control Boards.

On November 8, 2012, the Regional Water Quality Control Board, Los Angeles Region (RWQCB), adopted Order No. R4-2012-0175. This Order is the NPDES Permit (NPDES No. CAS004001) for municipal stormwater and urban runoff discharges within the County of Los Angeles.

As adopted in November 2012, the requirements of Order No. R4-2012-0175 (the "Permit') cover 84 cities and the unincorporated areas of Los Angeles County. The County of Los Angeles and the 84 incorporated cities are designated as Permittees.

In compliance with the Permit, the Permittees have implemented a stormwater quality management program (SQMP) with the ultimate goal of accomplishing the requirements of the Permit and reducing the amount of pollutants in stormwater and urban runoff wherein new development/redevelopment projects are required to prepare a Low Impact Development (LID) report.

As a Permittee of the County of Los Angeles, Best Management Practices (BMPs) are enforceable by the City of Hacienda Heights.

B. Designated Project Categories

Table 1, Designated Project Categories, identifies the Project as Category 1, thereby requiring development of this Low Impact Development (LID) report.

Table 1 – Designated Project Categories

Category	Description
1	All development projects equal to 1 acre or greater of disturbed area and adding more than 10,000 square feet of impervious surface area.
2	Industrial parks with 10,000 square feet or more of surface area.
3	Commercial malls with 10,000 square feet or more of surface area.
4	Retail gasoline outlets with 5,000 square feet or more of surface area.
5	Restaurants (Standard Industrial Classification [SIC] of 5812) with 5,000 square feet or more of surface area.
6	Parking lots with 5,000 square feet or more of impervious surface area, or with 25 or more parking spaces.
7	Automotive service facilities (SIC Codes: 5013, 5014, 5511, 5541, 7532-7534 and 7536-7539) with 5,000 square feet or more of surface area.

Table 1 – Designated Project Categories	
Category	Description
8	Projects located in or directly adjacent to, or discharging directly to a Significant Ecological Area (SEA), where the development will: • Discharge stormwater runoff that is likely to impact a sensitive biological species or habitat; and • Create 2,500 square feet or more of impervious surface area.
9	Redevelopment projects, which are developments that result in creation or addition or replacement of either: 5,000 square feet or more of impervious surface on a site that was previously developed as described in the above bullets; or (2) 10,000 square feet or more of impervious surface area on a site that was previously developed as a single family home. • Where 50 percent or more of the impervious surface of a previously developed site is proposed to be altered and the previous development project was not subject to post-construction stormwater quality control measures, the entire development site (e.g., both the existing development and the proposed alternation) must meet the requirements of the LID Standards Manual. • Where less than 50% of the impervious surface of a previously developed site is proposed to be altered and the previous development project was not subject to post-construction stormwater quality control measures, only the proposed alteration must meet the requirements of the LID Standards Manual. • Redevelopment does not include routine maintenance activities that are conducted to maintain original line and grade, hydraulic capacity, original purpose of facility or emergency redevelopment activity required to protect public health and safety. Impervious surface replacement, such as the reconstruction of parking lots and roadways which does not disturb additional area and maintains the original grade and alignment, is considered a routine maintenance activity. Redevelopment does not include the repaving of existing roads to maintain original line and grade.

C. Site Description

The project is located at the southwest intersection of Glenelder Avenue and Folger Street, in the City of Hacienda Heights. The project address is 16234 Folger Street, Hacienda Heights, CA 91745. The APN is 8242-004-900.

Surrounding land use include primarily residential land uses on all sides, including Folger Street to the north, Glenelder Avenue to the east, Denley Street to the south and Hinnen Avenue to the west.

Existing land use for the project site is an Elementary School that consists of classroom buildings, surface parking, playground and open spaces areas.

D. Project Description

LENNAR proposes Vesting Tentative Tract Map No. 82159 for the development of 86 detached condominiums, common open space, parking, private drives, curb, gutter, sidewalk and storm drain improvements, retaining wall, wet and dry utilities and related infrastructure improvements. There will be improvements to Glenelder Avenue, Folger Street and Hinnen Avenue, the project limits are shown on the Vesting Tentative Tract Map.

A conceptual residential unit mix is provided in the following table

Plan Type	Mix	Percentage
1	24	28.0
2	28	33.0
3	34	39.0
Total	86	100%

Parking for the project will include garage and driveway parking, as well as on-street parking in accordance with the County's parking ordinance.

Proposed landscaping will consist common opens space lots as well as private landscaping located within each private residential lot. Total landscaping is anticipated to consist of approximately 45% of the project site.

Paved and other impervious areas of the site include the project's project streets, curb, walkways and gutter improvements and residential building footprint of each residential lot. Total impervious surface is anticipated to consist of 55% of the project site.

Activities typical of residential developments can be anticipated for the residential portion of the project. These are anticipated to include day to day activities such as recreation, commuting and other typical residential activities.

E. Geotechnical Conditions

Topography – The topography of the project site is characterized as relatively flat, with the southeast corner of the site with the highest elevation of 366 feet above mean sea level (AMSL) and the lowest elevation at the northwestern corner of the site at approximately 351 feet above mean sea level (AMSL), the site slopes from south to north.

Soil Type and Geology – Geographically, the project site lies within the southeaster portion of the San Gabriel Valley, within the Peninsular Ranges Geomorphic Province. It is located in a broad alluvial valley that is several miles north of the northwest-trending Whittier Hills that are bounded by the Whittier Hills Fault. The southwest-trending San Jose Hills, located to the northeast of the site, are bound by Walnut Creek Fault. The site is located on a laterally extensive young alluvial fan deposit interpreted to be approximately middle Holocene age. It is about a quarter-mile from the channelized San Jose Creek, a west-flowing drainage that joins the San Gabriel River several miles downstream. Based on field explorations indicate the site soils consist of fine-grained very stiff silts with varying amounts of medium dense sand and

gravelly sand layers to the maximum explored depth of approximately 50 below ground.

Groundwater – Groundwater was encountered at a depth of approximately 41.5 feet below existing grade during field explorations. Historic high groundwater is estimated to be about 15 feet below existing grade.

Other Geotechnical Issues – Infiltration testing was conducted onsite in accordance with the County of Los Angeles testing guidelines and the measured infiltration rates ranged from 0.0 to 0.6 inches per hour, which does not include a factor of safety. Based on these infiltration tests, the site is not feasible for infiltration BMP's.

F. Watershed Area and Drainage Conditions

Watershed – The project site lies within the San Gabriel River Watershed. The watershed is completely urbanized, characterized by industrial, commercial and residential land uses, impervious surfaces, underground storm drains and engineered concrete-lined channels; it encompasses an area of approximately 640 square miles, including 19 cities that the San Gabriel river passes through. The channel flows pass through different sections in the San Gabriel river, diverting from the riverbed into four different spreading grounds, held behind several rubber dams for controlled flow and ground water recharge, and controlled through 10 miles of concrete channel bottom below Whittier Narrows Dam to past Coyote Creek.

Existing Drainage – Stormwater and surface water onsite generally flow from south/southeast to north/northwest (i.e., from the Glenelder Avenue/Shadybend Drive intersection towards Folger Street/Hinnen Avenue intersection). Runoff from the site will be conveyed to an existing storm drain system in Folger Street.

All runoff is then conveyed to San Jose Creek, north of the project site. Storm flows will continue westerly and confluence with San Gabriel River and ultimately discharge to the Pacific Ocean.

Proposed Drainage – In the developed condition, stormwater and surface water onsite will be conveyed similar to existing conditions. Onsite runoff will be divided into eight sub-drainage areas, as storm flows will connect to an existing storm drain in Folger Street.

To address project requirements for LID BMPs, the site has been divided into eight drainage management areas (DMA), as storm flows from DMA's 1-8 will be conveyed to Modular Wetland. Based on the available footprint, Modular Wetland Systems are proposed as the BMP's for the project site.

G. Other Site Considerations

Existing Utilities – Based on preliminary site assessment, the locations of existing utilities onsite and offsite would not pose any issues to the project's proposed BMPs.

H. Receiving Water Impairments

When designated beneficial uses of a particular water body are compromised by water quality, Section 303(d) of the Clean Water Act requires identifying and listing that water body as "impaired". Once a water body has been deemed impaired, a Total Maximum Daily Load ("TMDL") must be developed for each water quality constituent

that compromises a beneficial use. A TMDL is an estimate of the total load of pollutants, from point, non-point, and natural sources, that a water body may receive without exceeding applicable water quality standards (with a "factor of safety" included). For point sources, including stormwater, the load allocation is referred to as a "Waste Load Allocation" (WLA) whereas for nonpoint sources, the allocation is referred to simply as a "Load Allocation".

Impairments to the project's receiving waters are as follows:

Receiving Water	303(d)	TMDL
San Jose Creek Reach 2 (Temple St. to I-10 at White Avenue)	Coliform Bacteria	None
San Jose Creek Reach 1 (SG Confluence to Temple St.)	Ammonia, pH, Total Dissolved Solids, Toxicity	None
San Gabriel River Reach 3 (Whittier Narrows to Ramona)	Indicator Bacteria	Metals
San Gabriel River Reach 2 (Firestone to Whittier Narrows Dam)	Coliform Bacteria, Cyanide, Lead	Metals
San Gabriel River Reach 1 (Estuary to Firestone)	Coliform Bacteria, pH	Metals
San Pedro Bay Near/Off Shore Zones	Chlordane, DDT (tissue & sediment), PCBs (Polychlorinated biphenyls), Sediment Toxicity	None

I. Pollutants of Concern

Urban storm water run-off in both the dry and rainy season contains pollutants that can be carried through the storm drain networks to lakes, streams and beaches. The anticipated pollutants of concern for this Project are as follows:

Bacteria and Viruses. Potential sources of bacteria for the Project include landscaping areas, pet wastes, food wastes and naturally occurring sources.

Nutrients. Potential sources of nutrients in storm water consist of the macro-nutrients nitrogen and phosphorous, which are typically found in fertilizers from landscaping areas, decaying vegetation from preservation/natural areas and trash and debris.

Pesticides. Potential sources of pesticides include common landscaping areas and homeowner-owned landscaping areas.

Sediment/Suspended Solids. Potential sources of sediment and suspended solids include landscaping areas.

Trash & Debris. Potential sources include misplacement or overfill of food wastes, wrappers, and other trash materials.

Metals. Potential sources include vehicles and vehicular fluids.

Oil and Grease. Potential sources of oil and grease include automotive vehicles and fluids and maintenance equipment.

Toxic Organic Compounds. Potential sources include pesticides, solvents and hydrocarbons.

II. BEST MANAGEMENT PRACTICES (BMP's)

BMPs are natural or constructed devices, procedures, rules or methods which, when implemented and followed, should reduce and/or eliminate the specific source of pollution of which the BMP is targeted.

A. Site Design Principles

The intention of site design principles is to reduce runoff peak flows and volumes resulting from land development. As required by the MS4 Permit and the County of Los Angeles Low Impact Development Manual, the following site design principles must be considered for use on all projects:

Site Planning – Project proponents must implement a holistic approach to site design in order to develop a more hydraulically-functional site, help maximize the effectiveness of on-site retention and integrate storm water management throughout the project site.

Protect and Restore Natural Areas – Conservation of natural areas, soils and vegetation helps to retain numerous functions of pre-development hydrology, including rainfall interception, infiltration, and evapotranspiration. Each project site possesses unique topographic, hydrologic, and vegetative features, some of which are more suitable for development than others. Sensitive areas, such as streams and their buffers, floodplains, wetlands, steep slopes, and highly-permeable soils, should be protected and/or restored. Slopes can be a major source of sediment and should be properly protected and stabilized. Locating development in less sensitive areas of a project site and conserving naturally vegetated areas can minimize environmental impacts from storm water runoff.

The Project site was previously used as a school site. The conservation of natural areas is not applicable to the project. The project will incorporate the use of tree plantings throughout the project site, providing canopy interception of rain, thereby reducing runoff from developed site.

Minimize Land Disturbance – The purpose of this site design principle is to protect water quality by preserving the natural hydrologic function of the project site to the maximum extent practicable. By designing a project site layout to preserve natural hydrology and drainage ways at the project site, it reduces the need for grading and disturbance of native vegetation and soils. Siting buildings and impervious surfaces away from steep slopes, drainage ways, and floodplains limits the amount of grading and clearing necessary and reduces the hydrologic impact. This site design principle is most applicable in Greenfield settings, but opportunities to implement this principle may exist in redevelopment projects.

The project site proposes to maintain the pre-project hydrologic function of the site via the use of the project's proposed LID BMPs. Project land disturbance will be limited to the proposed redevelopment and take advantage of the existing site's pervious soils to address project runoff.

Minimize Impervious Area – The potential for discharge of pollutants in storm water runoff from a project site increases as the percentage of impervious area within the project site increases because impervious areas increase the volume and rate of storm

water runoff. Pollutants deposited on impervious areas are easily mobilized and transported by storm water runoff. Minimizing impervious area through site design is an important method to reducing the pollutant load in storm water runoff.

The Project proposes to minimize impervious area via the use of minimum-width roadway and sidewalk sections wherever feasible and common open space areas.

B. Source Control Measures

Source control measures are designed to prevent pollutants from contacting storm water runoff or preventing discharge of contaminated storm water runoff to the storm drain system and/or receiving water.

This section describes structural-type, source control measures that must be considered for implementation, in conjunction with appropriate non-structural source control measures, such as good housekeeping and employee training, to optimize pollution prevention.

Structural Controls

Storm Drain Message and Signage (S-1) – Storm drain stencils are highly visible source controls that are typically placed directly adjacent to storm drain inlets. The stencil contains a brief statement that prohibits the dumping of improper materials into the storm water conveyance system. Graphical icons, either illustrating anti-dumping symbols or images of receiving water fauna, are effective supplements to the anti-dumping message.

- All storm drain inlets and catch basins within the project area must be stenciled with prohibitive language (such as: "NO DUMPING – DRAINS TO OCEAN") and/or graphical icons to discourage illegal dumping.
- Signs and prohibitive language and/or graphical icons, which prohibit illegal dumping, must be posted at public access points along channels and creeks within the project area.
- Legibility of stencils and signs must be maintained.

All onsite catch basin will be stenciled with the language, "NO DUMPING – DRAINS TO OCEAN" or equivalent phrase. The stencils shall be maintained by the HOA.

Outdoor Material Storage Areas (S-2) – None proposed.

Outdoor Trash Storage/Waste Handling Areas (S-3) – None proposed.

Outdoor Loading/Unloading Dock Area (S-4) – None proposed.

Outdoor Vehicle/Equipment Repair/Maintenance Area (S-5) – None proposed. Work to be conducted indoors.

Outdoor Vehicle/Equipment/Accessory Wash Area (S-6) – None proposed.

Fuel and Maintenance Area (S-7) – None proposed.

Landscape Irrigation Practices (S-8) – Irrigation runoff provides a pathway for pollutants (i.e., nutrients, bacteria, organics, sediment) to enter the storm drain

system. By controlling irrigation, runoff and the potential for pollutant transport is minimized.

Landscape and irrigation areas shall meet the following requirements:

- Minimize use of fertilizer, pesticides, and herbicides.
- Plan sites with sufficient landscaped area and dispersal capacity.
- Consult a landscape professional regarding appropriate plants, fertilizer, mulching applications and irrigation requirements to ensure healthy flora.
- Choose plants that minimize need for fertilizer and pesticides.
- Use native and/or drought tolerant plant species. Group plantings with similar water requirements.
- Employ use of mulch.
- Install rain sensors and pressure sensors to shut off irrigation system during, after rain storms and pressure drops/leaks.
- Implement integrated Pest Management Practices.

Building Materials Selection (S-9) – Building materials can potentially contribute pollutants of concern to storm water runoff through leaching. The use of alternative building materials can reduce pollutants in storm water by eliminating compounds that can leach into storm water runoff.

Alternative materials include the following:

- Replace use of pressure treated wood with cement-fiber or vinyl.
- Minimize the use of copper and galvanized metals on buildings and fencing.

Animal Care and Handling Facilities (S-10) – None proposed.

Outdoor Horticulture Areas (S-11) – None proposed.

Non-Structural Controls

Education of Property Owners, Tenants and Occupants –Educational materials will be provided to homeowners at close of escrow by the owner and periodically thereafter by the HOA to inform them of their potential impacts to downstream water quality. Materials include those described in Attachment F of this report.

Activity Restrictions – Activity restrictions to minimize potential impacts to water quality and with the purpose of protecting water quality will be prescribed by the project's Covenant, Conditions and Restrictions (CC&Rs).

Common Area Landscape Management – Maintenance activities for landscape areas shall be consistent with County and manufacturer guidelines for fertilizer and pesticide. Maintenance includes trimming, weeding and debris removal and vegetation planting and replacement. Stockpiled materials during maintenance activities shall be placed away from drain inlets and runoff conveyance devices. Wastes shall be properly disposed of or recycled. Application of materials shall be limited to the minimum required amounts and restricted within 48 hours prior to rain events.

Common Area Litter Control – Litter control onsite will include the use of HOA, violation reporting and clean up during landscaping maintenance activities and as needed to ensure good housekeeping of the project's common areas.

Street Sweeping Private Streets– The project's private streets shall be swept on a quarterly (at minimum) basis, including prior to the start of the traditional rainy season and as needed.

D. Storm Water Quality Design Volume (SWQDv)

The design storm, from which the SWQDv is calculated, is defined as the greater of:

- The 0.75-inch, 24-hour rain event; or
- The 85th percentile, 24-hour rain event as determined from the Los Angeles County 85th percentile precipitation isoheytal map.

The SWQDv values for the project were determined using the HydroCalc Program.

The Q_{BMP} (cfs) and SWQDv (ac-ft) below include the 1.5x factor.

Drainage Management Area	Acres	Q_{BMP} (cfs)	SWQDv (cu-ft)	BMP	Treatment Capacity
DMA 1	1.6	0.30	6,386	MWS-L-8-12-4'-11"-V	0.346 cfs
DMA 2	2.72	0.38	8,079	MWS-L-8-16-3'-11"-V	0.462 cfs
DMA 3	2.95	0.41	8,079	MWS-L-8-16-5'-11"-V	0.462 cfs
DMA 4	0.92	0.13	2,733	MWS-L-4-13-V	0.144 cfs
DMA 5	1.11	0.16	3,297	MWS-L-4-15-V	0.175 cfs

E. Storm Water Quality Control Measures

Storm water quality control measures function to augment site design principles and source control measures to reduce storm water runoff volume and potential pollutant loads in runoff to the maximum extent practicable.

Based on the project site's infiltration test results, measured infiltration rate's for the site ranged from 0.0 to 0.6 inches per hour, per Preliminary Geotechnical Evaluation and Design Recommendations for Proposed Residential Development, Former Glenelder Elementary School Site, Hacienda Heights, California report dated March 12, 2018. Infiltration BMP's were considered but due to poor infiltration, Infiltration BMPs are not feasible for the proposed development.

Harvest and Reuse (aka. Rainwater Harvesting) BMPs are LID BMPs that capture and store storm water runoff for later use. These BMPs are engineered to store a specified volume of water and have no design surface discharge until this volume is exceeded. Harvest and use BMPs include both above-ground and below-ground cisterns.

Examples of uses for harvested water include irrigation, toilet and urinal flushing, vehicle washing, evaporative cooling, industrial processes and other non-potable uses. Harvest and use is not feasible due to limited landscaping, approximately 0.5 acres and the use of xeriscape landscaping that require low water use.

Selection of the project's treatment BMPs was primarily based on MS4 Permit requirements, which requires that all designated projects retain the SWQDv on-site using retention based measures, unless retention based measures are determined to be infeasible. The project will propose Modular Wetland Systems at DMA's 1-5 (T-6 Proprietary Treatment Control Measures). Modular Wetland Systems were sized based on the treatment flow rate (cfs). Each MWS system have been sized based on the 1.5x factor. For DMA's 3, 4 and 5 adjacent to the public right of way (Glenelder Avenue, Folger Street and Hinnen Avenue), the DMA limits will extent to the right of way and not within the public right of way. Storm water flows will be collected via an area drain system and low flow pipe and conveyed directly to MWS units 3, 4 and 5. For DMA's 1 and 2 within the tract, flows will be conveyed directly to the catch basin and to MWS units 1 and 2. Specific MWS details have been produced showing the invert in and invert out elevations for MWS units 1 – 5 that correspond to each respective catch basin. MWS system's 1 through 3 will propose a D-VERT System to divert low flows through the diversion trough system, units 4 and 5 will not have a D-VERT system

Consideration was also given to effectiveness in addressing the project's anticipated pollutants of concern; as well as compliance with receiving water impairments and discharge limitations (TMDL for Metal).

To meet the requirements of the metals TMDL, all low flow runoff onsite will be conveyed to the project's BMPs, MWS Linear Stormwater Biofiltration System.

To meet the zero trash discharge requirement, all project catch basins will be equipped with catch basin inserts/inlet screens to remove trash/litter, debris and sediment from runoff entering the project's storm drain system.

F. Hydromodification Requirements

The project is exempt from the hydromodification requirements of the MS4 Permit, as the project discharges through a fully improved storm drain system that discharges to a receiving water San Jose Creek and the San Gabriel River that is not susceptible to hydromodification impacts.

III. Storm Water Quality Control Measure Maintenance

1. Maintenance and inspection activities for the identified BMPs will be performed as indicated on the enclosed BMP Inspection and Maintenance Responsibility/Frequency Matrix in Attachment D.
2. The project owners and proponents, LENNAR shall employ self-inspections and record keeping for BMPs, as applicable. The owner shall retain all maintenance records for a period of five (5) years after the recorded inspection date for the lifetime of the Project. The records shall be made readily available for review by all government agencies. Depending on the type of BMP, minimum frequency of inspections may range from weekly, to once a month, quarterly, or yearly.
3. The contact information for the owner is as follows:

Property Owner:	LENNAR
Contact:	Andrew Han
Address:	15131 Alton Parkway, Suite 365, Irvine, CA 92618
Phone:	(949) 349-8234

   LENNAR shall be responsible for the management of the residential portion of the project site and implementation and maintenance of the requirements of this LID Report until such time, the property has not been turned over to the HOA for ownership and maintenance.

4. A copy of the project's on-site BMP maintenance covenant to be recorded at the County of Los Angeles shall be inserted in Attachment F. This maintenance covenant has been devised by the County of Los Angeles to legally assign responsibilities for maintenance of proposed BMP facilities such that they run with the land. In order to comply with item A of the LID Report (provide proof of ongoing BMP maintenance), responsibilities have been listed as an encumbrance on the property (per the maintenance covenant), and shall be signed by the owners, and shall be recorded in the Los Angeles County Recorder's Office.
5. Should a transfer of ownership occur, appropriate notification shall be filed with the County of Los Angeles confirming the change in responsibility and continued implementation of stormwater management requirements.

ATTACHMENTS

ATTACHMENT A VICINITY MAP

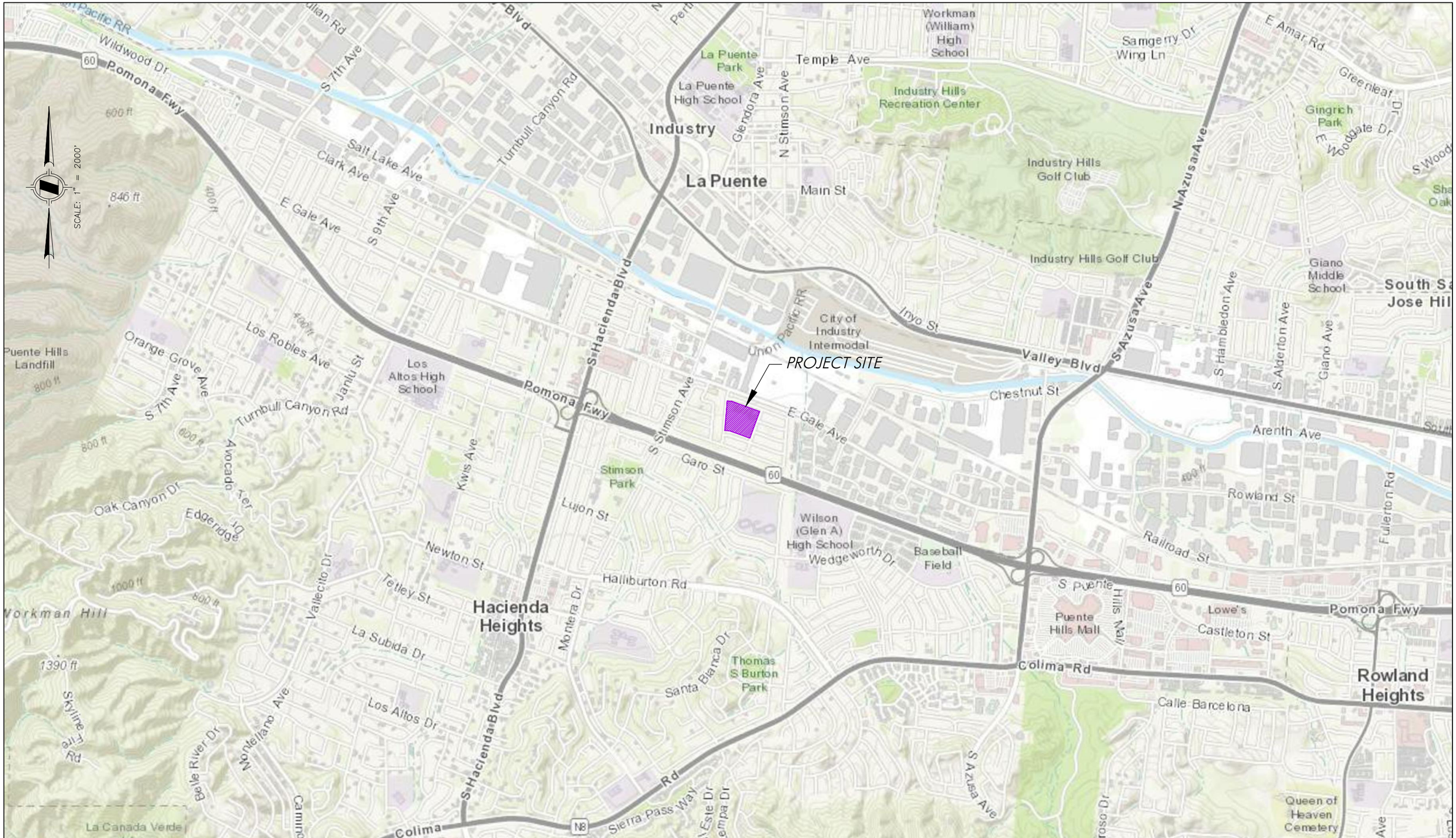

DRAWN BY: TIH	PREPARED BY: HUNSAKER & ASSOCIATES IRVINE, INC. PLANNING ■ ENGINEERING ■ SURVEYING Three Hughes, Irvine, CA 92618 ■ PH: (949) 583-1010 ■ FX: (949) 583-0759	PREPARED FOR: LENNAR 25 ENTERPRISE, SUITE 400 ALISO VIEJO, CA 92656 (949) 349-8100	"VESTING TENTATIVE TRACT MAP NO. 082159" 16234 FOLGER STREET CITY OF HACIENDA HEIGHTS LOS ANGELES COUNTY, CA
DATE: 10/24/2018			LID PLAN VICINITY MAP
W.O.: 3619-22			

DATE: Oct. 24, 2018 01:21:11 PM FILE: F:\1037\Planning\SY_WQ\LID\Exhibits\LID_VIC Glenelder.dwg

ATTACHMENT B SITE PLAN

LEGEND

- PROJECT LIMITS
- NAP — NOT A PART
- DRAINAGE MANAGEMENT AREA (DMA) LIMITS
- DMA1 / 1.81 — DMA DESIGNATION AND ACREAGE
- EXISTING STORM DRAIN & FLOW
- PROJECT STORM DRAIN & FLOW
- FLOW DIRECTION (ONSITE)
- FLOW DIRECTION (OFFSITE)
- EXISTING CATCH BASIN
- PROJECT CATCH BASIN W/ BMPS STORM DRAIN STENCILING (SD-13) FULL TRASH CAPTURE INLET SCREEN
- PROJECT WALKWAYS, DRIVEWAYS AND PRIVATE DRIVEWAY
- COMMON OPEN SPACE AREAS
- PRIVATE OPEN SPACE AREAS (FRONT, SIDE, AND REAR WITHIN BOUNDARY AREA OF DWELLING.)
- PROJECT DISCHARGE POINT
- PROPRIETARY BIOFILTRATION MODULAR WETLAND SYSTEM (OR APPROVED EQUAL)
- AREA DRAIN AND LOW FLOW PIPE
- DWELLING AREA LIMITS

DMA TABLE

DMA	AREA (ACRES)	VOLUME (CF) PER CALC'S	VOLUME (CF) 1.5 TIMES	WQ FLOW RATE (CFS) PER CALC'S	WQ FLOW RATE (CFS) 1.5 TIMES	MWS UNITS NUMBER	MWS UNITS SIZE	NOTE
1	2.15	4,257	6,386	0.20	0.30	#1	MWS-8-12	LOW FLOW PIPE PROVIDED FOR PROJECT AREA ONLY, NO PUBLIC ROAD LOW FLOWS
2	2.72	5,386	8,079	0.25	0.38	#2	MWS-8-16	
3	2.95	5,841	8,079	0.28	0.41	#3	MWS-8-16	
4	0.92	1,822	2,733	0.09	0.13	#4	MWS-4-13	
5	1.11	2,198	3,297	0.10	0.16	#5	MWS-4-15	
OVERALL	9.85	19,504	29,256	0.92	1.38			

PROPRIETARY BIOFILTRATION (MWS) TYPICAL SECTION DETAIL

N.T.S.

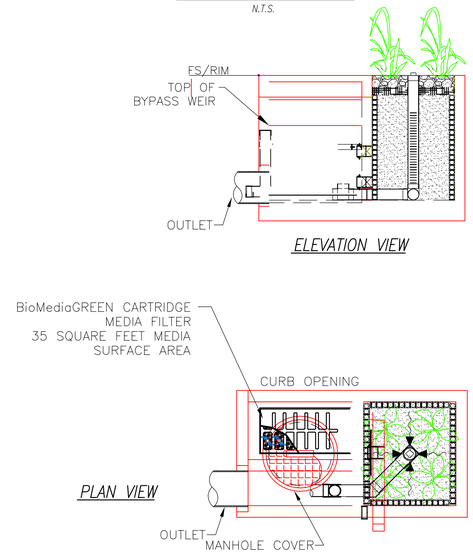

GRAPHIC SCALE
0 20 40 80
(IN FEET)
1 INCH = 40 FT.

LOW IMPACT DEVELOPMENT (LID) PLAN - SITE PLAN

APPLICANT:
LENNAR
15131 ALTON PARKWAY, SUITE 365
IRVINE, CA 92618
(949) 349-8100

PREPARED BY:
HUNSAKER & ASSOCIATES IRVINE, INC.
PLANNING ▪ ENGINEERING ▪ SURVEYING
Three Hughes ▪ Irvine, CA 92618 ▪ Prt: (949) 583-1010 ▪ Fx: (949) 583-0759

"VESTING TENTATIVE TRACT MAP NO. 082159"
16234 FOLGER STREET
CITY OF HACIENDA HEIGHTS
LOS ANGELES COUNTY, CA

DRAFTED BY: TIH	DATE: 05/20/2018	W.O. NO: 3916-28X	SHEET NO: 1 OF 1

DATE: May. 29, 2019 09:25:04 AM FILE: F:\1037\Planning\SY_WQ\LID\Exhibits\LID_SP Glenelder.dwg

ATTACHMENT C BMP CALCULATIONS AND DETAILS

BMP Calculations

Peak Flow Hydrologic Analysis

File location: C:/SD/VTTM 082159/Updated/VTTM 82159 - Overall WQ Calc - 0.75 inch.pdf
Version: HydroCalc 1.0.3

Input Parameters

Project Name	VTTM 82159
Subarea ID	Overall WQ Calc - 0.75 inch
Area (ac)	16.8
Flow Path Length (ft)	1835.0
Flow Path Slope (vft/hft)	0.013
0.75-inch Rainfall Depth (in)	0.75
Percent Impervious	0.5
Soil Type	17
Design Storm Frequency	0.75 inch storm
Fire Factor	0
LID	True

Output Results

Modeled (0.75 inch storm) Rainfall Depth (in)	0.75
Peak Intensity (in/hr)	0.1133
Undeveloped Runoff Coefficient (Cu)	0.1
Developed Runoff Coefficient (Cd)	0.5
Time of Concentration (min)	93.0
Clear Peak Flow Rate (cfs)	0.9514
Burned Peak Flow Rate (cfs)	0.9514
24-Hr Clear Runoff Volume (ac-ft)	0.5207
24-Hr Clear Runoff Volume (cu-ft)	22682.6096

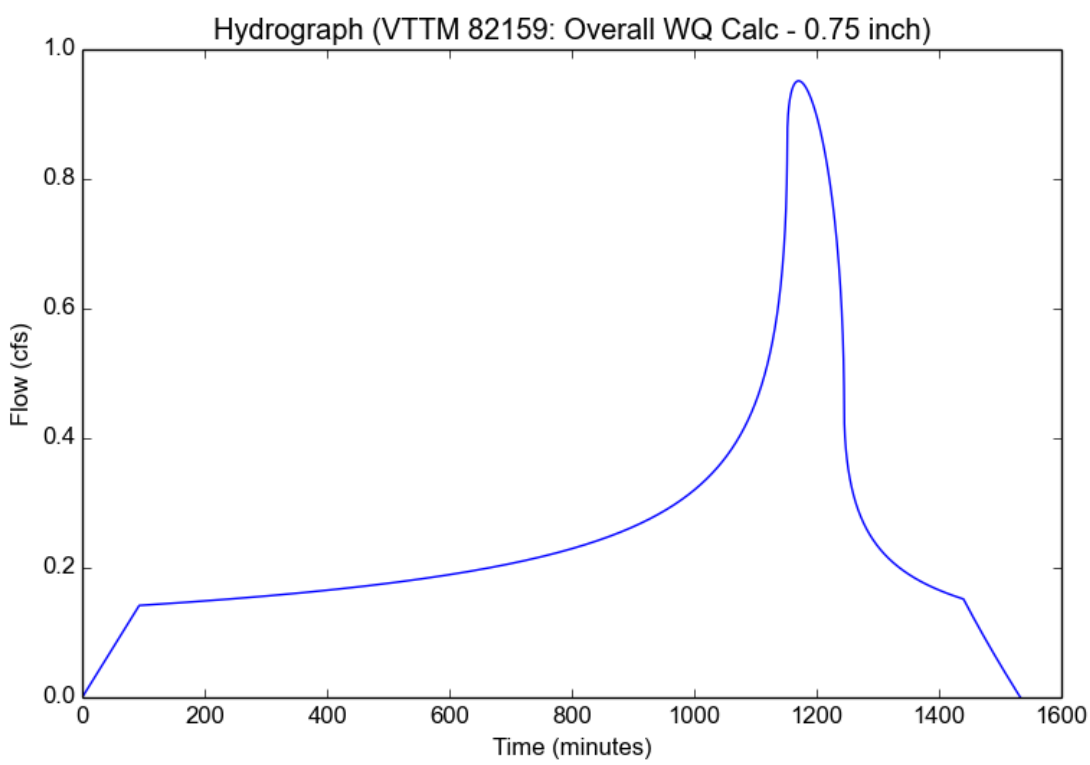

Peak Flow Hydrologic Analysis

File location: C:/SD/VTTM 082159/Updated/VTTM 82159 - Overall WQ Calc - 85th Percentile.pdf
Version: HydroCalc 1.0.3

Input Parameters

Project Name	VTTM 82159
Subarea ID	Overall WQ Calc - 85th Percentile
Area (ac)	16.8
Flow Path Length (ft)	1835.0
Flow Path Slope (vft/hft)	0.013
85th Percentile Rainfall Depth (in)	1.1
Percent Impervious	0.5
Soil Type	17
Design Storm Frequency	85th percentile storm
Fire Factor	0
LID	True

Output Results

Modeled (85th percentile storm) Rainfall Depth (in)	1.1
Peak Intensity (in/hr)	0.1874
Undeveloped Runoff Coefficient (Cu)	0.1
Developed Runoff Coefficient (Cd)	0.5
Time of Concentration (min)	72.0
Clear Peak Flow Rate (cfs)	1.5738
Burned Peak Flow Rate (cfs)	1.5738
24-Hr Clear Runoff Volume (ac-ft)	0.7637
24-Hr Clear Runoff Volume (cu-ft)	33266.2618

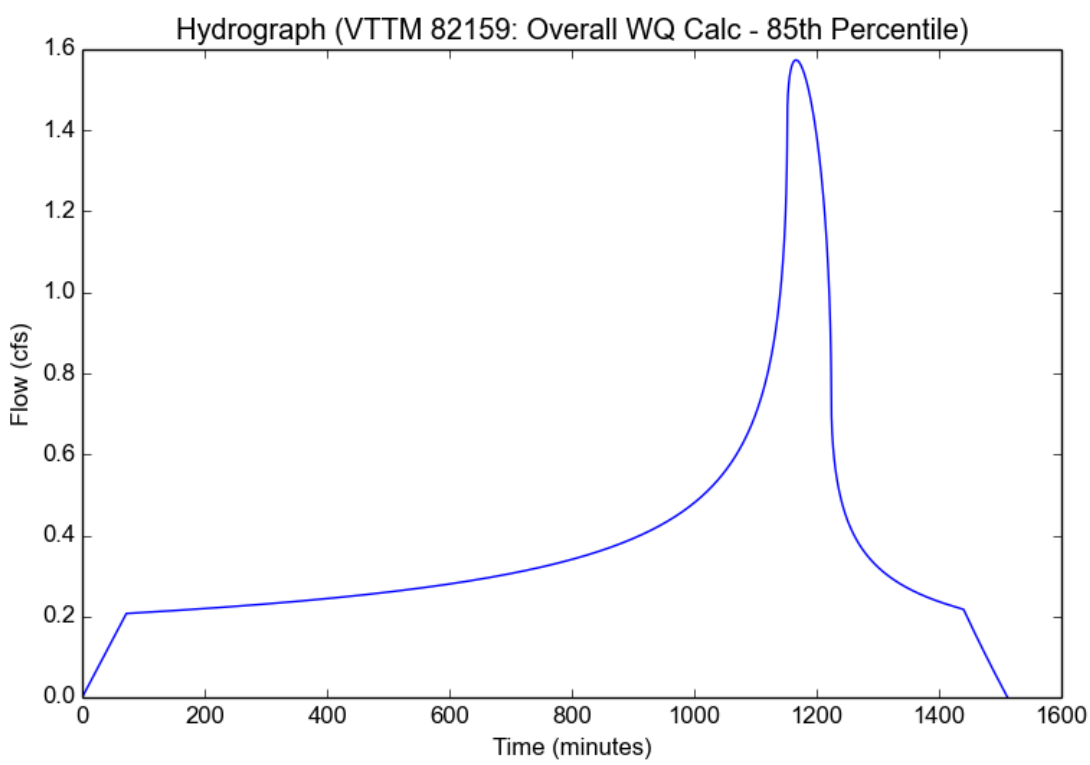

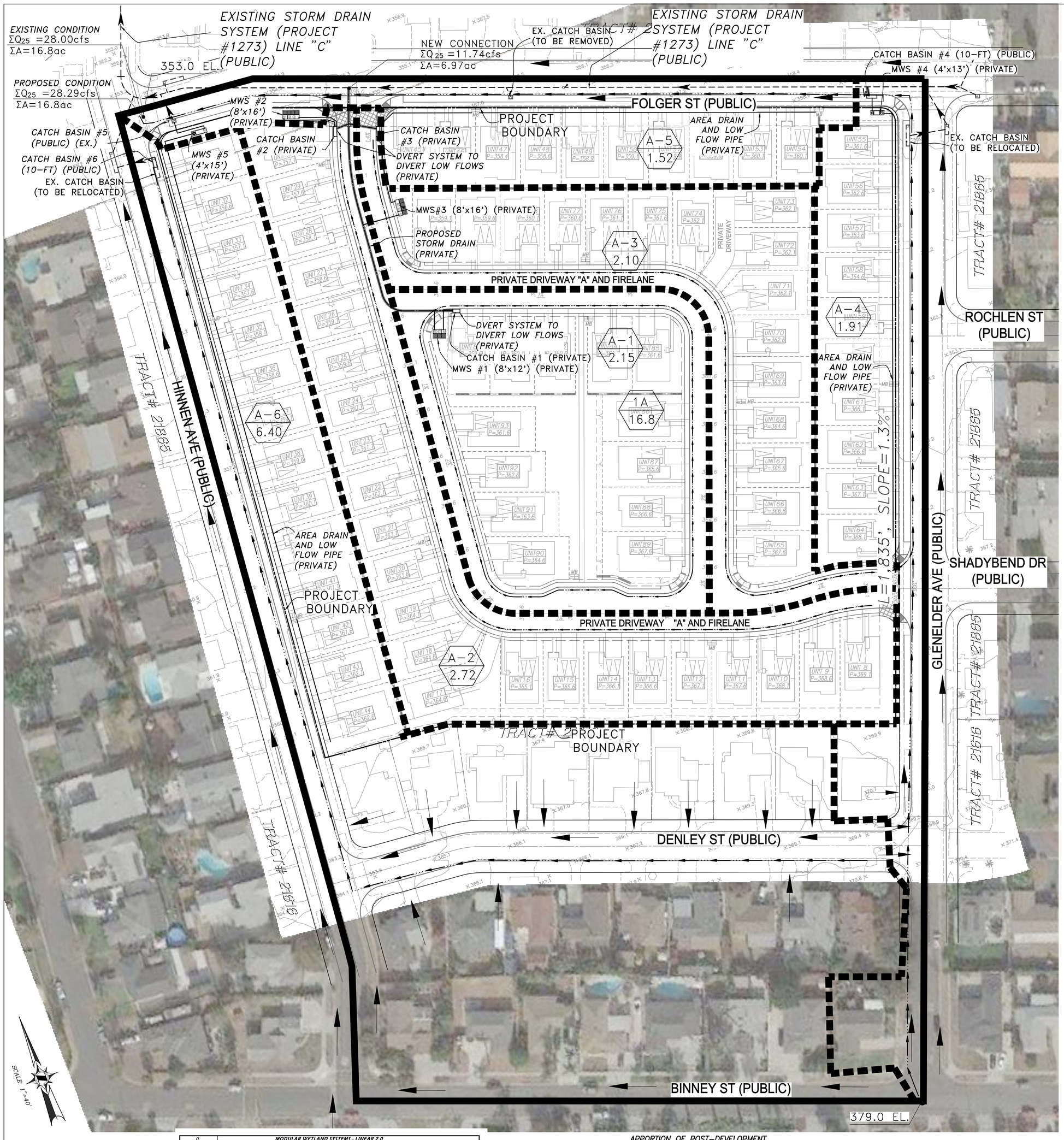

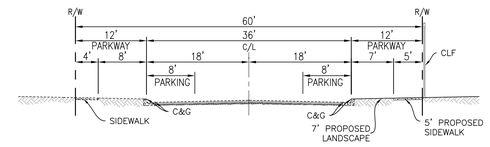

HINNEN AVENUE
EXISTING PUBLIC STREET
N.T.S.

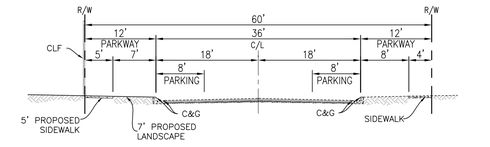

GLENELDER AVENUE
EXISTING PUBLIC STREET
N.T.S.

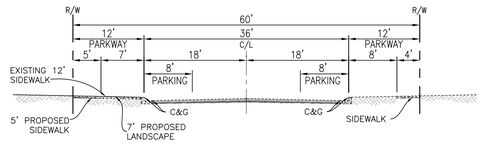

FOLGER STREET
EXISTING PUBLIC STREET
N.T.S.

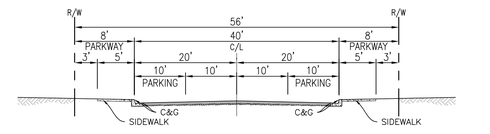

PRIVATE DRIVEWAY "A" & FIRE LANE
PRIVATE STREET
N.T.S.

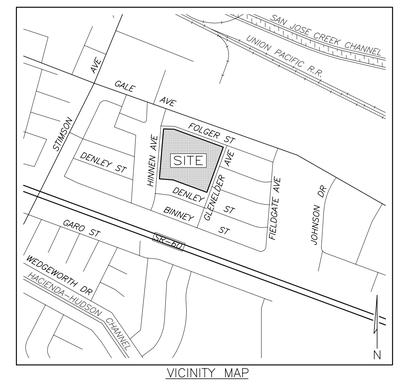

VICINITY MAP
N.T.S.

HYDROLOGIC INFORMATION

7	DPA ZONE
017	SOIL GROUP
6.4"	50-YEAR 24-HOUR ISOHYET
50	AREA WEIGHTED AVERAGE % IMPERVIOUSNESS
1	BURN FACTOR
1	BULKING FACTOR
1.1"	85TH PERCENTILE STORM
PROJECT DESIGN STORM	85TH PERCENTILE STORM
PERCENT OF DESIGN STORM RETAINED ON-SITE	0%

APPORTION OF POST-DEVELOPMENT FLOW RATES PER SUBAREA

SUBAREA	AREA (ACRES)	10-YR FLOW RATE (CFS)	25-YR FLOW RATE (CFS)	50-YR FLOW RATE (CFS)	CATCH BASIN NUMBER
A-1	2.15	2.63	3.62	4.31	#1
A-2	2.72	3.33	4.58	5.45	#2
A-3	2.10	2.57	3.54	4.21	#3
A-4	1.91	2.34	3.22	3.83	#4
A-5	1.52	1.86	2.56	3.05	#5
A-6	6.40	7.84	10.78	12.83	#6
OVERALL	16.80	20.58	28.29	33.67	

ALLOWABLE FLOW RATES

PER LA COUNTY DEPARTMENT OF PUBLIC WORKS DESIGN DIVISION - HYDRAULIC ANALYSIS UNIT, THE Q ALLOWABLE FOR PROJECT 1273 - LINE "C" IS 1.7 CFS/ACRE.
SUBAREA AREA: 16.8 AC
SUBAREA Q ALLOWABLE: 28.56 CFS
UPDATED Q25: 28.29 CFS
THE PROJECT DESIGN FLOWS ARE LESS THAN THE ALLOWABLE DISCHARGE.

LEGEND

- DRAINAGE BOUNDARY
- SUB-AREA DRAINAGE BOUNDARY
- 1A / 1.0 — AREA DESIGNATION FOR AREA "A" / AREA ACREAGE (IN ACRES)
- A-1 / 1.0 — SUB-AREA DESIGNATION / AREA ACREAGE (IN ACRES)
- FLOW LINE
- ΣQ25 =30.0cfs / ΣA=10.0ac — SUMMATION 25-YR FLOW RATE / TOTAL DRAINAGE AREA IN ACRES

0 20 40 80 120 160
SCALE: 1" = 40'

PREPARED FOR:

LENNAR

15131 ALTON PARKWAY, SUITE 365
IRVINE, CA 92618
(949) 349-8000

PREPARED BY:

HUNSAKER & ASSOCIATES
IRVINE, INC
PLANNING • ENGINEERING • SURVEYING
Three Hughes • Irvine, CA 92618 • Ph: (949) 583-1010 • Fx: (949) 583-0759

REGISTERED PROFESSIONAL ENGINEER
No. 64519
Exp. 06/30/19
CIVIL
STATE OF CALIFORNIA

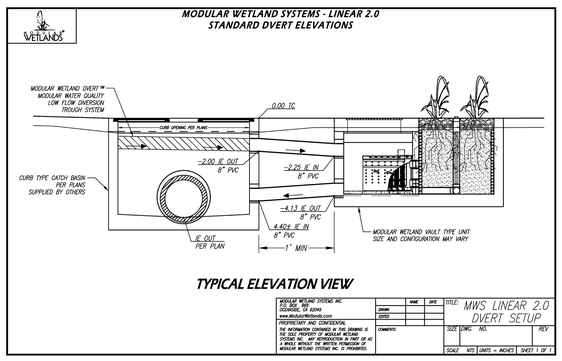

DVERT SYSTEM TO DIVERT THE LOW FLOW
NTS

APPORTION OF POST-DEVELOPMENT WATER QUALITY RATES PER SUBAREA

SUBAREA	AREA (ACRES)	VOLUME (CF) PER CALC'S	VOLUME (CF) 1.5 TIMES	WQ FLOW RATE (CFS) PER CALC'S	WQ FLOW RATE (CFS) 1.5 TIMES	MWS UNITS NUMBER	MWS UNITS SIZE	NOTE
A-1	2.15	4,257	6,386	0.20	0.30	#1	MWS-8-12	
A-2	2.72	5,386	8,079	0.25	0.38	#2	MWS-8-16	
A-3	2.95**	5,841	8,079	0.28	0.41	#3	MWS-8-16**	LOW FLOW PIPE PROVIDED FOR PROJECT AREA ONLY, NO PUBLIC ROAD LOW FLOWS
A-4	0.92	1,822	2,733	0.09	0.13	#4	MWS-4-13	
A-5	–	–	–	–	–	–		
A-6	1.11	2,198	3,297	0.10	0.16	#5	MWS-4-15	
OVERALL	9.85	19,504	29,256	0.92	1.38			

NOTE:
MWS #3 INCLUDES AREA "A-3" AND PROJECT PORTIONS OF AREA "A-5"

NOTE:

- NOT WITHIN COUNTY ADOPTED FLOODWAY
- NOT WITHIN FEMA FLOOD ZONE A
- THE DRAINAGE FACILITIES TO BE MAINTAINED BY LACDPW UNLESS OTHERWISE NOTED.

THOMAS GUIDE PAGE: 678
GRID: D2

EXHIBIT 3

DRAINAGE CONCEPT/HYDROLOGY STUDY FOR VESTING TENTATIVE TRACT MAP 082159

16234 FOLGER STREET, HACIENDA HEIGHTS, CA 91745

W.O. 3916-22X GLENELDER PROPOSED HYDROLOGY MAP

PLOTTED BY: Gary Guan DATE: May. 28, 2019 10:22:28 AM FILE: F:\1037\Engineering\SY_Hydrology\Prop Hydrology Map.dwg

BMP Details

SITE SPECIFIC DATA			
PROJECT NUMBER		8092	
ORDER NUMBER		----	
PROJECT NAME		GLENELDER	
PROJECT LOCATION		HACIENDA HEIGHTS, CA	
STRUCTURE ID		MWS 1	
TREATMENT REQUIRED			
VOLUME BASED (CF)		FLOW BASED (CFS)	
N/A		0.3	
TREATMENT HGL AVAILABLE (FT)			N/K
PEAK BYPASS REQUIRED (CFS) – IF APPLICABLE			DVERT
PIPE DATA	I.E.	MATERIAL	DIAMETER
INLET PIPE 1	355.50	PVC	8"
INLET PIPE 2	N/A	N/A	N/A
OUTLET PIPE	353.00	PVC	8"
	PRETREATMENT	BIOFILTRATION	DISCHARGE
RIM ELEVATION	358.00	358.00	358.00
SURFACE LOAD	PEDESTRIAN	OPEN PLANTER	PEDESTRIAN
FRAME & COVER	2EA ø30"	OPEN PLANTER	ø24"
WETLANDMEDIA VOLUME (CY)			7.48
ORIFICE SIZE (DIA. INCHES)			ø2.56"
NOTES: PRELIMINARY NOT FOR CONSTRUCTION. DVERT SYSTEM – 5FT LINEAR LENGTH BY BIO CLEAN.			

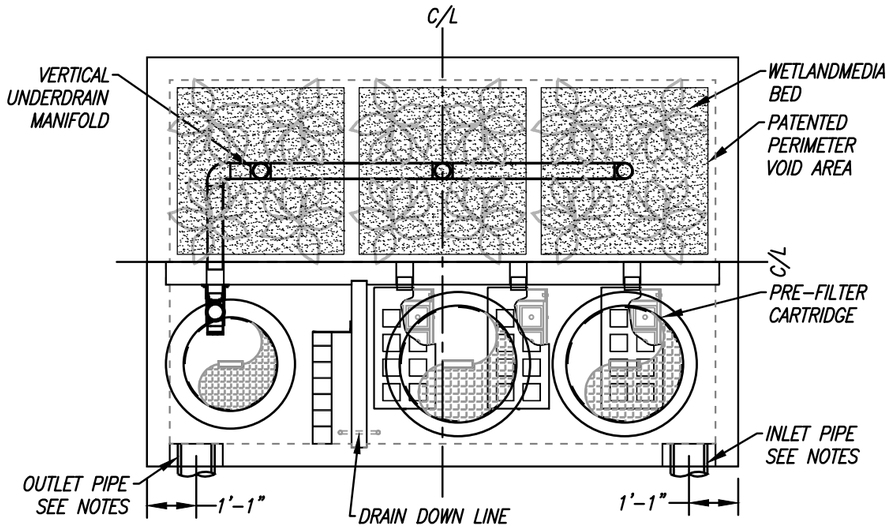

PLAN VIEW

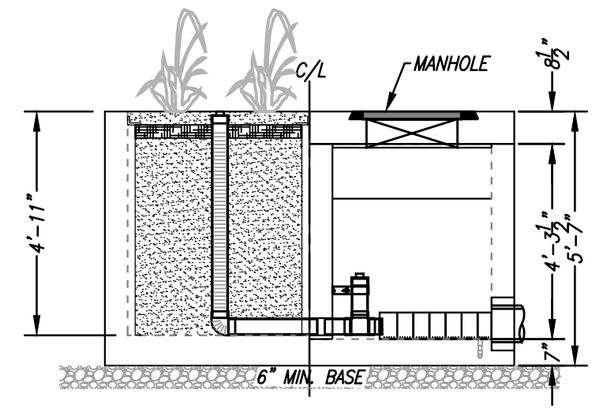

LEFT END VIEW

INSTALLATION NOTES

1. CONTRACTOR TO PROVIDE ALL LABOR, EQUIPMENT, MATERIALS AND INCIDENTALS REQUIRED TO OFFLOAD AND INSTALL THE SYSTEM AND APPURTENANCES IN ACCORDANCE WITH THIS DRAWING AND THE MANUFACTURERS SPECIFICATIONS, UNLESS OTHERWISE STATED IN MANUFACTURERS CONTRACT.
2. UNIT MUST BE INSTALLED ON LEVEL BASE. MANUFACTURER RECOMMENDS A MINIMUM 6" LEVEL ROCK BASE UNLESS SPECIFIED BY THE PROJECT ENGINEER. CONTRACTOR IS RESPONSIBLE TO VERIFY PROJECT ENGINEERS RECOMMENDED BASE SPECIFICATIONS.
4. CONTRACTOR TO SUPPLY AND INSTALL ALL EXTERNAL CONNECTING PIPES. ALL PIPES MUST BE FLUSH WITH INSIDE SURFACE OF CONCRETE. (PIPES CANNOT INTRUDE BEYOND FLUSH). INVERT OF OUTFLOW PIPE MUST BE FLUSH WITH DISCHARGE CHAMBER FLOOR. ALL PIPES SHALL BE SEALED WATER TIGHT PER MANUFACTURERS STANDARD CONNECTION DETAIL.
5. CONTRACTOR RESPONSIBLE FOR INSTALLATION OF ALL RISERS, MANHOLES, AND HATCHES. CONTRACTOR TO GROUT ALL MANHOLES AND HATCHES TO MATCH FINISHED SURFACE UNLESS SPECIFIED OTHERWISE.
6. VEGETATION SUPPLIED AND INSTALLED BY OTHERS. ALL UNITS WITH VEGETATION MUST HAVE DRIP OR SPRAY IRRIGATION SUPPLIED AND INSTALLED BY OTHERS.
7. CONTRACTOR RESPONSIBLE FOR CONTACTING BIO CLEAN FOR ACTIVATION OF UNIT. MANUFACTURERS WARRANTY IS VOID WITH OUT PROPER ACTIVATION BY A BIO CLEAN REPRESENTATIVE.

GENERAL NOTES

1. MANUFACTURER TO PROVIDE ALL MATERIALS UNLESS OTHERWISE NOTED.
2. ALL DIMENSIONS, ELEVATIONS, SPECIFICATIONS AND CAPACITIES ARE SUBJECT TO CHANGE. FOR PROJECT SPECIFIC DRAWINGS DETAILING EXACT DIMENSIONS, WEIGHTS AND ACCESSORIES PLEASE CONTACT BIO CLEAN.

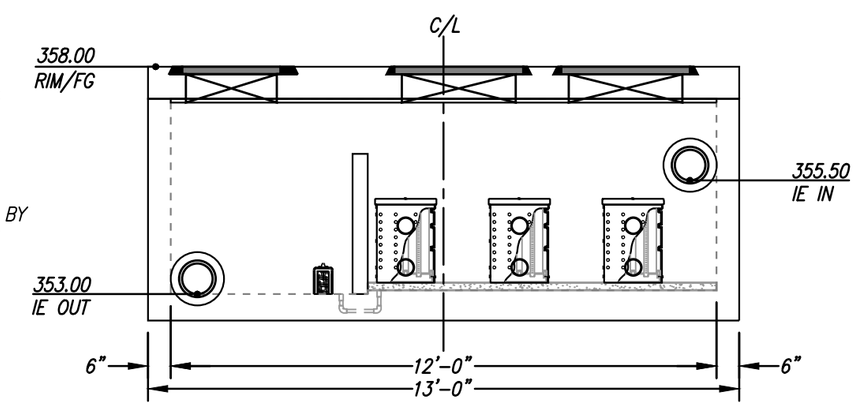

ELEVATION VIEW

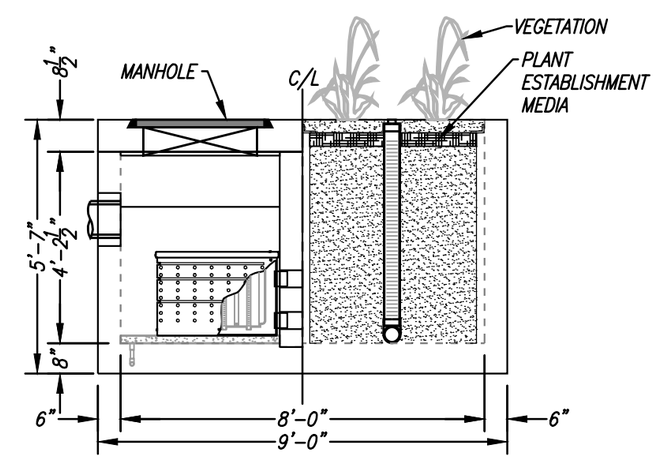

RIGHT END VIEW

INTERNAL BYPASS DISCLOSURE:

THE DESIGN AND CAPACITY OF THE PEAK CONVEYANCE METHOD TO BE REVIEWED AND APPROVED BY THE ENGINEER OF RECORD. HGL(S) AT PEAK FLOW SHALL BE ASSESSED TO ENSURE NO UPSTREAM FLOODING. PEAK HGL AND BYPASS CAPACITY SHOWN ON DRAWING ARE USED FOR GUIDANCE ONLY.

TREATMENT FLOW (CFS)	0.3
OPERATING HEAD (FT)	2.9
PRETREATMENT LOADING RATE (GPM/SF)	1.8
WETLAND MEDIA LOADING RATE (GPM/SF)	1.0

MODULAR WETLANDS

THIS PRODUCT MAY BE PROTECTED BY ONE OR MORE OF THE FOLLOWING US PATENTS: 7,425,262; 7,470,362; 7,674,378; 8,303,816; RELATED FOREIGN PATENTS OR OTHER PATENTS PENDING

PROPRIETARY AND CONFIDENTIAL:

THE INFORMATION CONTAINED IN THIS DOCUMENT IS THE SOLE PROPERTY OF FORTERRA AND ITS COMPANIES. THIS DOCUMENT, NOR ANY PART THEREOF, MAY BE USED, REPRODUCED OR MODIFIED IN ANY MANNER WITH OUT THE WRITTEN CONSENT OF FORTERRA.

Bio Clean
A Forterra Company

MWS-L-8-12-4'-11"-V
STORMWATER BIOFILTRATION SYSTEM
STANDARD DETAIL

5/20/19GSINGH

SITE SPECIFIC DATA			
PROJECT NUMBER		8092	
ORDER NUMBER		----	
PROJECT NAME		GLENELDER	
PROJECT LOCATION		HACIENDA HEIGHTS, CA	
STRUCTURE ID		MWS 2	
TREATMENT REQUIRED			
VOLUME BASED (CF)		FLOW BASED (CFS)	
N/A		0.38	
TREATMENT HGL AVAILABLE (FT)			N/K
PEAK BYPASS REQUIRED (CFS) – IF APPLICABLE			DVERT
PIPE DATA	I.E.	MATERIAL	DIAMETER
INLET PIPE 1	353.00	PVC	8"
INLET PIPE 2	N/A	N/A	N/A
OUTLET PIPE	351.00	PVC	8"
	PRETREATMENT	BIOFILTRATION	DISCHARGE
RIM ELEVATION	355.00	355.00	355.00
SURFACE LOAD	PEDESTRIAN	OPEN PLANTER	PEDESTRIAN
FRAME & COVER	2EA 36"X36"	OPEN PLANTER	ø24"
WETLANDMEDIA VOLUME (CY)			7.94
ORIFICE SIZE (DIA. INCHES)			ø2.92"
NOTES: PRELIMINARY NOT FOR CONSTRUCTION. DVERT SYSTEM – 10FT LINEAR LENGTH BY BIO CLEAN.			

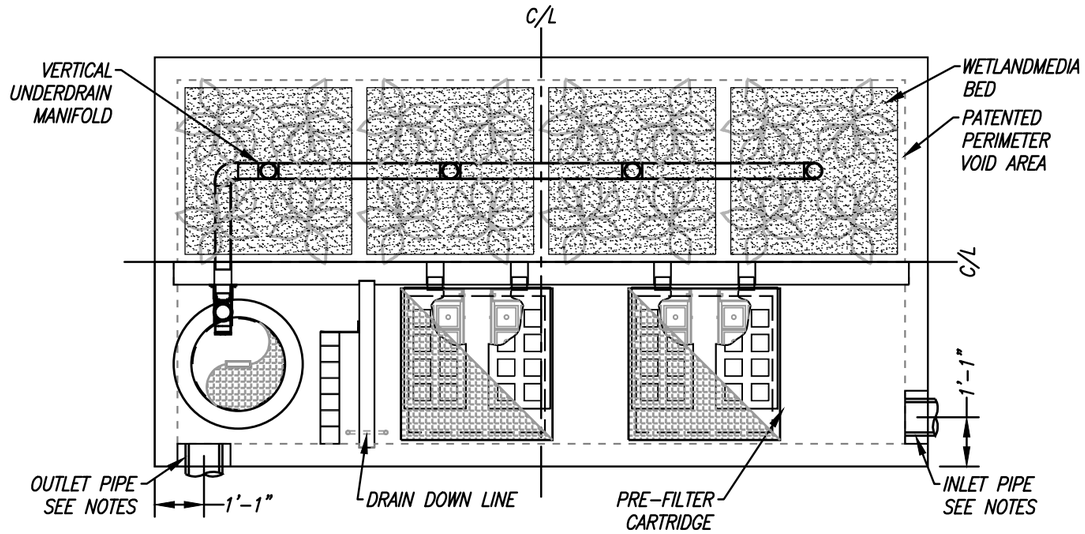

PLAN VIEW

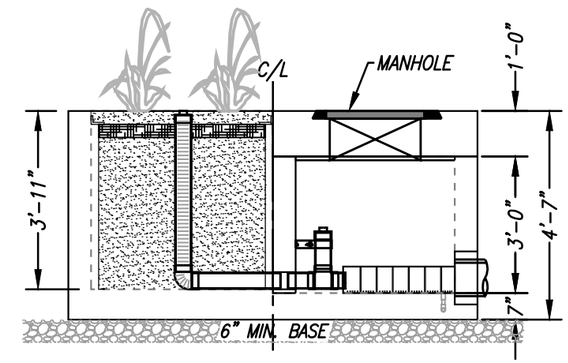

LEFT END VIEW

INSTALLATION NOTES

1. CONTRACTOR TO PROVIDE ALL LABOR, EQUIPMENT, MATERIALS AND INCIDENTALS REQUIRED TO OFFLOAD AND INSTALL THE SYSTEM AND APPURTENANCES IN ACCORDANCE WITH THIS DRAWING AND THE MANUFACTURERS SPECIFICATIONS, UNLESS OTHERWISE STATED IN MANUFACTURERS CONTRACT.
2. UNIT MUST BE INSTALLED ON LEVEL BASE. MANUFACTURER RECOMMENDS A MINIMUM 6" LEVEL ROCK BASE UNLESS SPECIFIED BY THE PROJECT ENGINEER. CONTRACTOR IS RESPONSIBLE TO VERIFY PROJECT ENGINEERS RECOMMENDED BASE SPECIFICATIONS.
4. CONTRACTOR TO SUPPLY AND INSTALL ALL EXTERNAL CONNECTING PIPES. ALL PIPES MUST BE FLUSH WITH INSIDE SURFACE OF CONCRETE. (PIPES CANNOT INTRUDE BEYOND FLUSH). INVERT OF OUTFLOW PIPE MUST BE FLUSH WITH DISCHARGE CHAMBER FLOOR. ALL PIPES SHALL BE SEALED WATER TIGHT PER MANUFACTURERS STANDARD CONNECTION DETAIL.
5. CONTRACTOR RESPONSIBLE FOR INSTALLATION OF ALL RISERS, MANHOLES, AND HATCHES. CONTRACTOR TO GROUT ALL MANHOLES AND HATCHES TO MATCH FINISHED SURFACE UNLESS SPECIFIED OTHERWISE.
6. VEGETATION SUPPLIED AND INSTALLED BY OTHERS. ALL UNITS WITH VEGETATION MUST HAVE DRIP OR SPRAY IRRIGATION SUPPLIED AND INSTALLED BY OTHERS.
7. CONTRACTOR RESPONSIBLE FOR CONTACTING BIO CLEAN FOR ACTIVATION OF UNIT. MANUFACTURERS WARRANTY IS VOID WITH OUT PROPER ACTIVATION BY A BIO CLEAN REPRESENTATIVE.

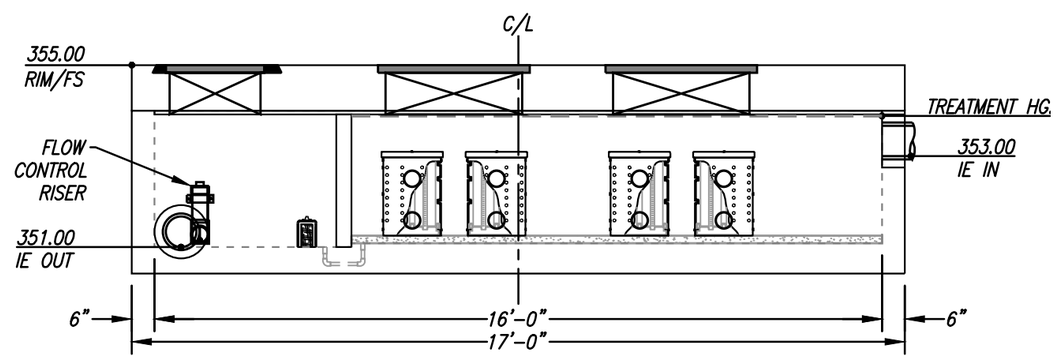

ELEVATION VIEW

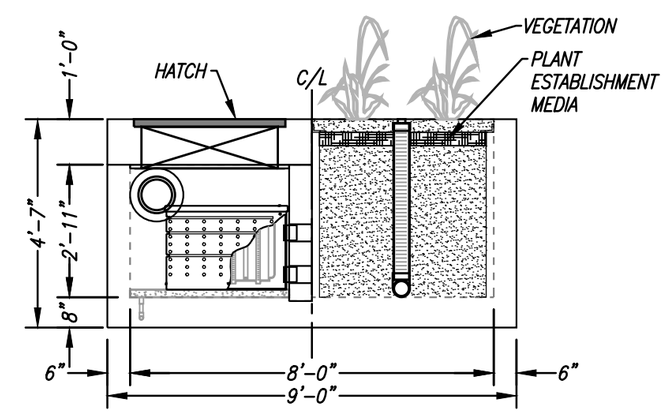

RIGHT END VIEW

TREATMENT FLOW (CFS)	0.38
OPERATING HEAD (FT)	2.8
PRETREATMENT LOADING RATE (GPM/SF)	1.7
WETLAND MEDIA LOADING RATE (GPM/SF)	1.0

GENERAL NOTES

1. MANUFACTURER TO PROVIDE ALL MATERIALS UNLESS OTHERWISE NOTED.
2. ALL DIMENSIONS, ELEVATIONS, SPECIFICATIONS AND CAPACITIES ARE SUBJECT TO CHANGE. FOR PROJECT SPECIFIC DRAWINGS DETAILING EXACT DIMENSIONS, WEIGHTS AND ACCESSORIES PLEASE CONTACT BIO CLEAN.

MODULAR WETLANDS

THIS PRODUCT MAY BE PROTECTED BY ONE OR MORE OF THE FOLLOWING US PATENTS: 7,425,262; 7,470,362; 7,674,378; 8,303,816; RELATED FOREIGN PATENTS OR OTHER PATENTS PENDING

PROPRIETARY AND CONFIDENTIAL:

THE INFORMATION CONTAINED IN THIS DOCUMENT IS THE SOLE PROPERTY OF FORTERRA AND ITS COMPANIES. THIS DOCUMENT, NOR ANY PART THEREOF, MAY BE USED, REPRODUCED OR MODIFIED IN ANY MANNER WITH OUT THE WRITTEN CONSENT OF FORTERRA.

Bio Clean
A Forterra Company

MWS-L-8-16-3'-11"-V
STORMWATER BIOFILTRATION SYSTEM STANDARD DETAIL

5/28/19GSINGH

SITE SPECIFIC DATA

PROJECT NUMBER		8092	
ORDER NUMBER		----	
PROJECT NAME		GLENELDER	
PROJECT LOCATION		HACIENDA HEIGHTS, CA	
STRUCTURE ID		MWS 3	
TREATMENT REQUIRED			
VOLUME BASED (CF)		FLOW BASED (CFS)	
N/A		0.41	
TREATMENT HGL AVAILABLE (FT)			N/K
PEAK BYPASS REQUIRED (CFS) – IF APPLICABLE			DVERT
PIPE DATA	I.E.	MATERIAL	DIAMETER
INLET PIPE 1	352.50	PVC	12"
INLET PIPE 2	N/A	N/A	N/A
OUTLET PIPE	351.00	PVC	12"
	PRETREATMENT	BIOFILTRATION	DISCHARGE
RIM ELEVATION	357.00	357.00	357.00
SURFACE LOAD	PEDESTRIAN	OPEN PLANTER	PEDESTRIAN
FRAME & COVER	2EA ø30"	OPEN PLANTER	ø24"
WETLANDMEDIA VOLUME (CY)			12.00
ORIFICE SIZE (DIA. INCHES)			ø2.98"

NOTES: PRELIMINARY NOT FOR CONSTRUCTION. DVERT SYSTEM – 16FT LINEAR LENGTH BY BIO CLEAN.

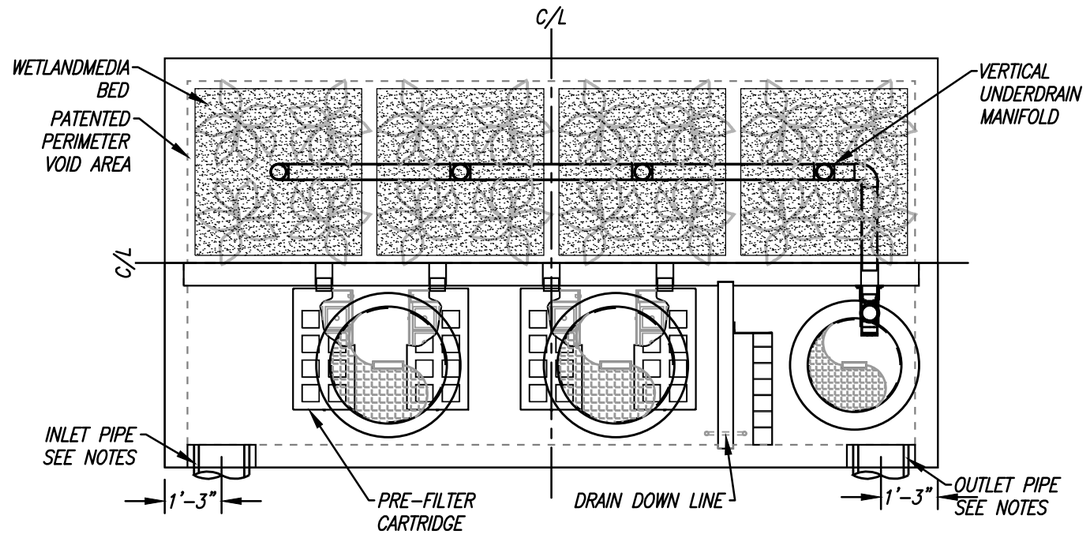

PLAN VIEW

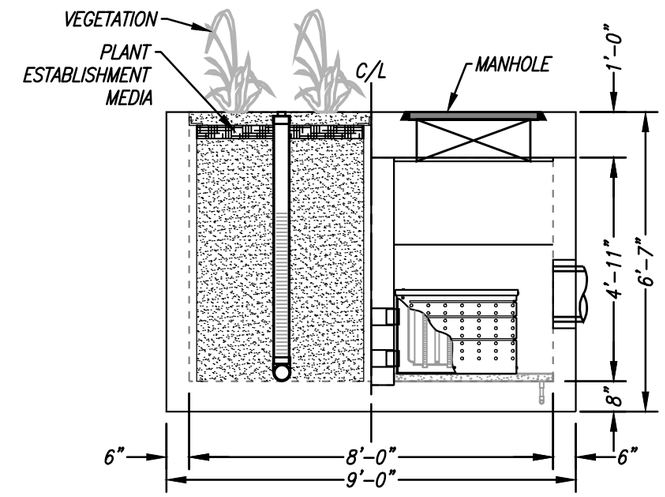

LEFT END VIEW

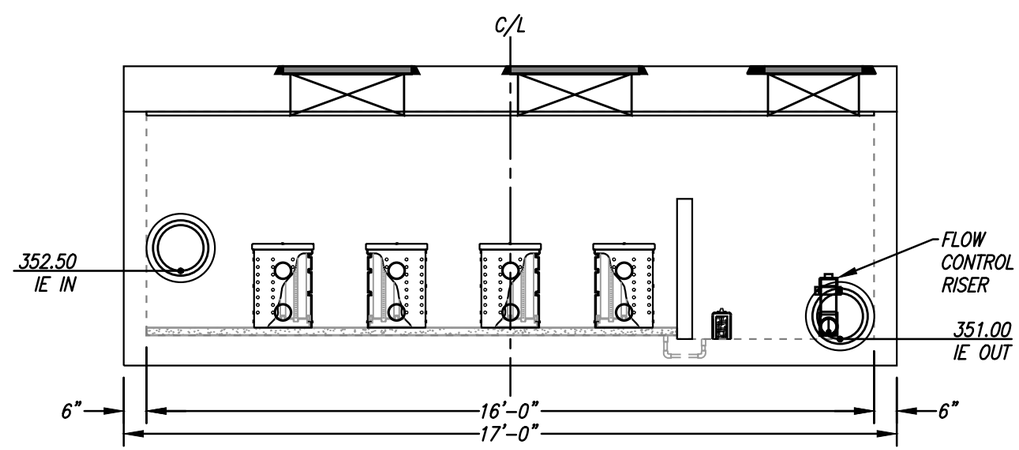

ELEVATION VIEW

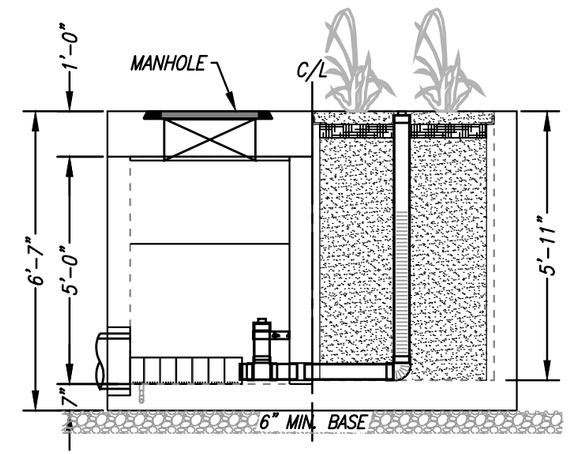

RIGHT END VIEW

INSTALLATION NOTES

1. CONTRACTOR TO PROVIDE ALL LABOR, EQUIPMENT, MATERIALS AND INCIDENTALS REQUIRED TO OFFLOAD AND INSTALL THE SYSTEM AND APPURTENANCES IN ACCORDANCE WITH THIS DRAWING AND THE MANUFACTURERS SPECIFICATIONS, UNLESS OTHERWISE STATED IN MANUFACTURERS CONTRACT.
2. UNIT MUST BE INSTALLED ON LEVEL BASE. MANUFACTURER RECOMMENDS A MINIMUM 6" LEVEL ROCK BASE UNLESS SPECIFIED BY THE PROJECT ENGINEER. CONTRACTOR IS RESPONSIBLE TO VERIFY PROJECT ENGINEERS RECOMMENDED BASE SPECIFICATIONS.
4. CONTRACTOR TO SUPPLY AND INSTALL ALL EXTERNAL CONNECTING PIPES. ALL PIPES MUST BE FLUSH WITH INSIDE SURFACE OF CONCRETE. (PIPES CANNOT INTRUDE BEYOND FLUSH). INVERT OF OUTFLOW PIPE MUST BE FLUSH WITH DISCHARGE CHAMBER FLOOR. ALL PIPES SHALL BE SEALED WATER TIGHT PER MANUFACTURERS STANDARD CONNECTION DETAIL.
5. CONTRACTOR RESPONSIBLE FOR INSTALLATION OF ALL RISERS, MANHOLES, AND HATCHES. CONTRACTOR TO GROUT ALL MANHOLES AND HATCHES TO MATCH FINISHED SURFACE UNLESS SPECIFIED OTHERWISE.
6. VEGETATION SUPPLIED AND INSTALLED BY OTHERS. ALL UNITS WITH VEGETATION MUST HAVE DRIP OR SPRAY IRRIGATION SUPPLIED AND INSTALLED BY OTHERS.
7. CONTRACTOR RESPONSIBLE FOR CONTACTING BIO CLEAN FOR ACTIVATION OF UNIT. MANUFACTURERS WARRANTY IS VOID WITH OUT PROPER ACTIVATION BY A BIO CLEAN REPRESENTATIVE.

GENERAL NOTES

1. MANUFACTURER TO PROVIDE ALL MATERIALS UNLESS OTHERWISE NOTED.
2. ALL DIMENSIONS, ELEVATIONS, SPECIFICATIONS AND CAPACITIES ARE SUBJECT TO CHANGE. FOR PROJECT SPECIFIC DRAWINGS DETAILING EXACT DIMENSIONS, WEIGHTS AND ACCESSORIES PLEASE CONTACT BIO CLEAN.

INTERNAL BYPASS DISCLOSURE:

THE DESIGN AND CAPACITY OF THE PEAK CONVEYANCE METHOD TO BE REVIEWED AND APPROVED BY THE ENGINEER OF RECORD. HGL(S) AT PEAK FLOW SHALL BE ASSESSED TO ENSURE NO UPSTREAM FLOODING. PEAK HGL AND BYPASS CAPACITY SHOWN ON DRAWING ARE USED FOR GUIDANCE ONLY.

TREATMENT FLOW (CFS)	0.41
OPERATING HEAD (FT)	3.0
PRETREATMENT LOADING RATE (GPM/SF)	1.8
WETLAND MEDIA LOADING RATE (GPM/SF)	1.0

MODULAR WETLANDS

THIS PRODUCT MAY BE PROTECTED BY ONE OR MORE OF THE FOLLOWING US PATENTS: 7,425,262; 7,470,362; 7,674,378; 8,303,816; RELATED FOREIGN PATENTS OR OTHER PATENTS PENDING

PROPRIETARY AND CONFIDENTIAL:

THE INFORMATION CONTAINED IN THIS DOCUMENT IS THE SOLE PROPERTY OF FORTERRA AND ITS COMPANIES. THIS DOCUMENT, NOR ANY PART THEREOF, MAY BE USED, REPRODUCED OR MODIFIED IN ANY MANNER WITH OUT THE WRITTEN CONSENT OF FORTERRA.

Bio Clean
A Forterra Company

MWS-L-8-16-5'-11"-V
STORMWATER BIOFILTRATION SYSTEM STANDARD DETAIL

5/20/19CSINGH

SITE SPECIFIC DATA			
PROJECT NUMBER		8092	
PROJECT NAME		GLENELDER	
PROJECT LOCATION		HACIENDA HEIGHTS, CA	
STRUCTURE ID		MWS 4	
TREATMENT REQUIRED			
VOLUME BASED (CF)		FLOW BASED (CFS)	
----		0.13	
TREATMENT HGL AVAILABLE (FT)			N/K
PEAK BYPASS REQUIRED (CFS) – IF APPLICABLE			N/K
PIPE DATA	I.E.	MATERIAL	DIAMETER
INLET PIPE 1	357.00	PVC	12"
INLET PIPE 2	N/A	N/A	N/A
OUTLET PIPE	354.50	PVC	12"
	PRETREATMENT	BIOFILTRATION	DISCHARGE
RIM ELEVATION	359.50	359.50	359.50
SURFACE LOAD	PEDESTRIAN	OPEN PLANTER	PEDESTRIAN
FRAME & COVER	ø30"	N/A	ø24"
WETLANDMEDIA VOLUME (CY)			3.73
ORIFICE SIZE (DIA. INCHES)			TBD
NOTES: PRELIMINARY. NOT FOR CONSTRUCTION. EOR STATED DVERT SYSTEM NOT NEEDED FOR THE UNIT.			

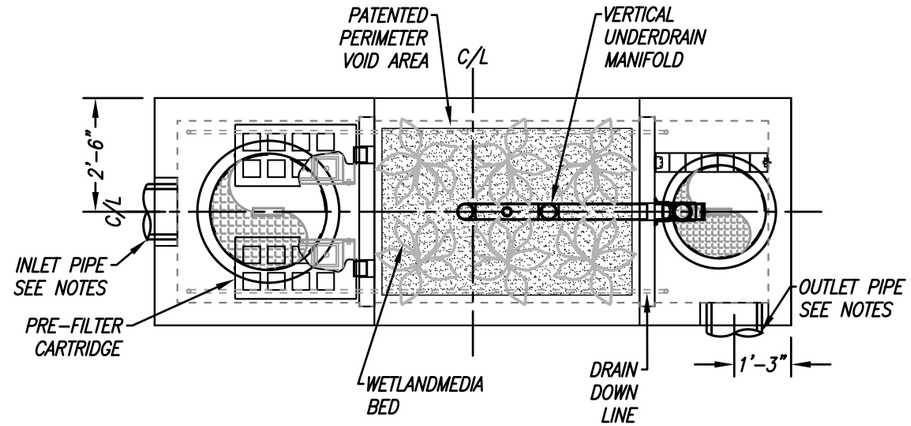

PLAN VIEW

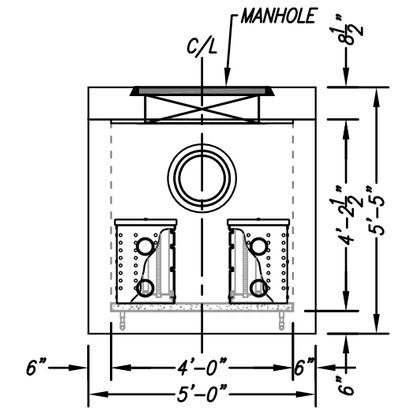

LEFT END VIEW

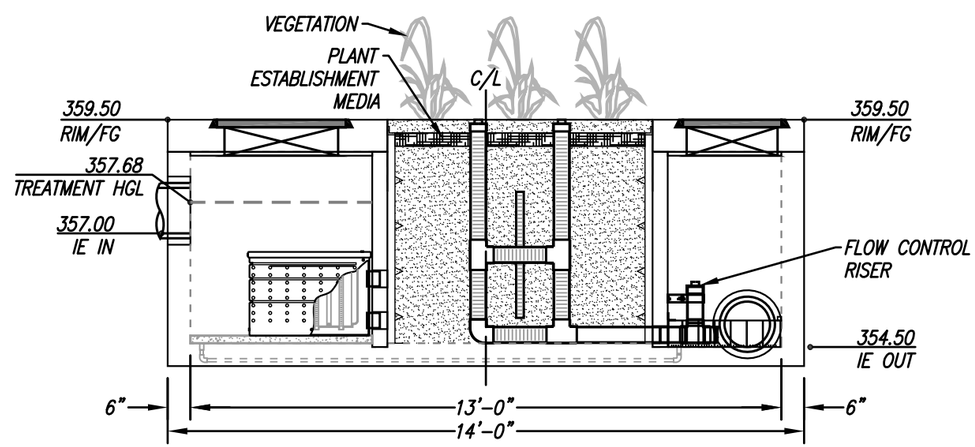

ELEVATION VIEW

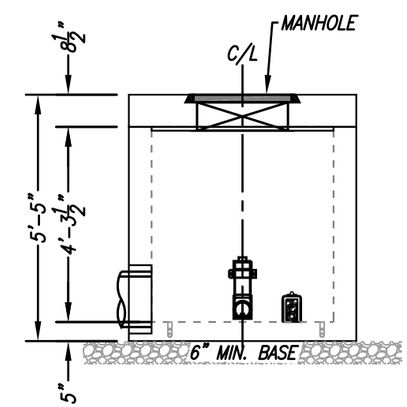

RIGHT END VIEW

INSTALLATION NOTES

1. CONTRACTOR TO PROVIDE ALL LABOR, EQUIPMENT, MATERIALS AND INCIDENTALS REQUIRED TO OFFLOAD AND INSTALL THE SYSTEM AND APPURTENANCES IN ACCORDANCE WITH THIS DRAWING AND THE MANUFACTURERS SPECIFICATIONS, UNLESS OTHERWISE STATED IN MANUFACTURERS CONTRACT.
2. UNIT MUST BE INSTALLED ON LEVEL BASE. MANUFACTURER RECOMMENDS A MINIMUM 6" LEVEL ROCK BASE UNLESS SPECIFIED BY THE PROJECT ENGINEER. CONTRACTOR IS RESPONSIBLE TO VERIFY PROJECT ENGINEERS RECOMMENDED BASE SPECIFICATIONS.
3. ALL PIPES MUST BE FLUSH WITH INSIDE SURFACE OF CONCRETE. (PIPES CANNOT INTRUDE BEYOND FLUSH). INVERT OF OUTFLOW PIPE MUST BE FLUSH WITH DISCHARGE CHAMBER FLOOR. ALL GAPS AROUND PIPES SHALL BE SEALED WATER TIGHT WITH A NON-SHRINK GROUT PER MANUFACTURERS STANDARD CONNECTION DETAIL AND SHALL MEET OR EXCEED REGIONAL PIPE CONNECTION STANDARDS.
4. CONTRACTOR TO SUPPLY AND INSTALL ALL EXTERNAL CONNECTING PIPES.
5. CONTRACTOR RESPONSIBLE FOR INSTALLATION OF ALL RISERS, MANHOLES, AND HATCHES. CONTRACTOR TO GROUT ALL MANHOLES AND HATCHES TO MATCH FINISHED SURFACE UNLESS SPECIFIED OTHERWISE.
6. DRIP OR SPRAY IRRIGATION REQUIRED ON ALL UNITS WITH VEGETATION.
7. CONTRACTOR RESPONSIBLE FOR CONTACTING MODULAR WETLANDS FOR ACTIVATION OF UNIT. MANUFACTURES WARRANTY IS VOID WITH OUT PROPER ACTIVATION BY A MODULAR WETLANDS REPRESENTATIVE.

GENERAL NOTES

1. MANUFACTURER TO PROVIDE ALL MATERIALS UNLESS OTHERWISE NOTED.
2. ALL DIMENSIONS, ELEVATIONS, SPECIFICATIONS AND CAPACITIES ARE SUBJECT TO CHANGE. FOR PROJECT SPECIFIC DRAWINGS DETAILING EXACT DIMENSIONS, WEIGHTS AND ACCESSORIES PLEASE CONTACT MANUFACTURER.

TREATMENT FLOW (CFS)	0.130
OPERATING HEAD (FT)	3.1
PRETREATMENT LOADING RATE (GPM/SF)	1.1
WETLAND MEDIA LOADING RATE (GPM/SF)	1.0

MODULAR WETLANDS

THIS PRODUCT MAY BE PROTECTED BY ONE OR MORE OF THE FOLLOWING US PATENTS: 7,425,262; 7,470,362; 7,674,378; 8,303,816; RELATED FOREIGN PATENTS OR OTHER PATENTS PENDING

PROPRIETARY AND CONFIDENTIAL:

THE INFORMATION CONTAINED IN THIS DRAWING IS THE SOLE PROPERTY OF MODULAR WETLANDS SYSTEMS. ANY REPRODUCTION IN PART OR AS A WHOLE WITHOUT THE WRITTEN PERMISSION OF MODULAR WETLANDS SYSTEMS IS PROHIBITED.

Bio Clean
A Forterra Company

MWS-L-4-13-V
STORMWATER BIOFILTRATION SYSTEM
STANDARD DETAIL

5/28/19GSINGH

SITE SPECIFIC DATA			
PROJECT NUMBER		8092	
PROJECT NAME		GLENELDER	
PROJECT LOCATION		HACIENDA HEIGHTS, CA	
STRUCTURE ID		MWS 5	
TREATMENT REQUIRED			
VOLUME BASED (CF)		FLOW BASED (CFS)	
----		0.16	
TREATMENT HGL AVAILABLE (FT)			N/K
PEAK BYPASS REQUIRED (CFS) – IF APPLICABLE			N/K
PIPE DATA	I.E.	MATERIAL	DIAMETER
INLET PIPE 1	353.00	PVC	12"
INLET PIPE 2	N/A	N/A	N/A
OUTLET PIPE	350.50	PVC	12"
	PRETREATMENT	BIOFILTRATION	DISCHARGE
RIM ELEVATION	355.00	355.00	355.00
SURFACE LOAD	PEDESTRIAN	OPEN PLANTER	PEDESTRIAN
FRAME & COVER	ø30"	N/A	ø24"
WETLANDMEDIA VOLUME (CY)			3.60
ORIFICE SIZE (DIA. INCHES)			TBD
NOTES: PRELIMINARY. NOT FOR CONSTRUCTION. EOR STATED DVERT IS NOT REQUIRED.			

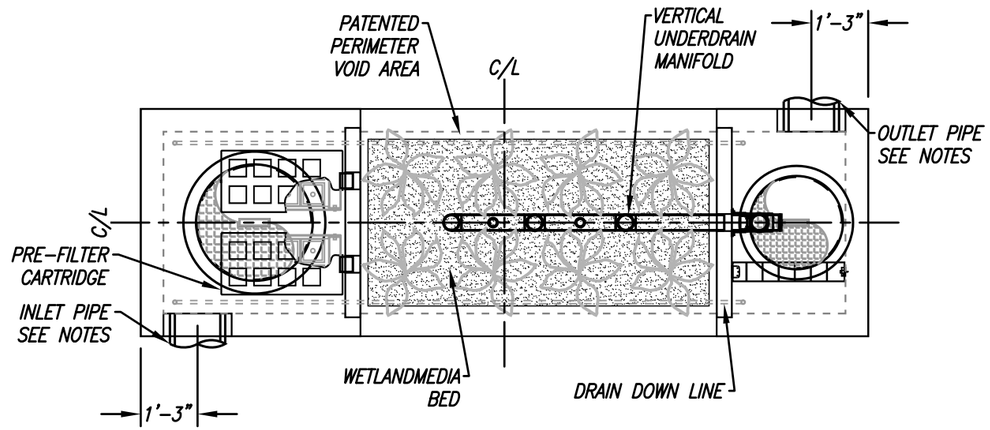

PLAN VIEW

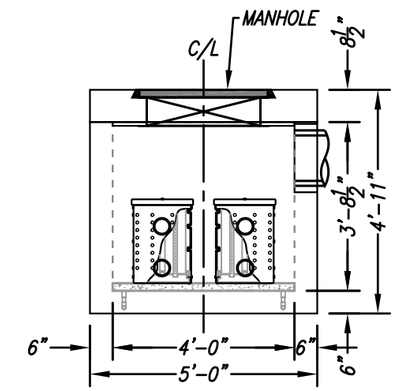

LEFT END VIEW

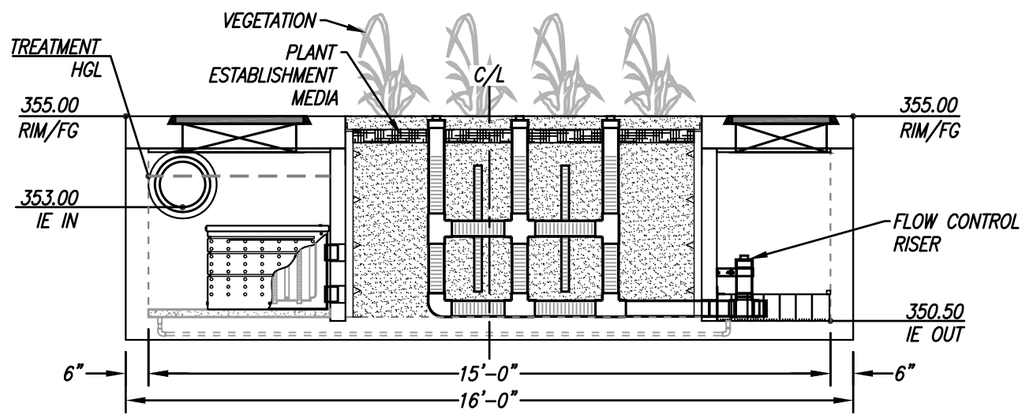

ELEVATION VIEW

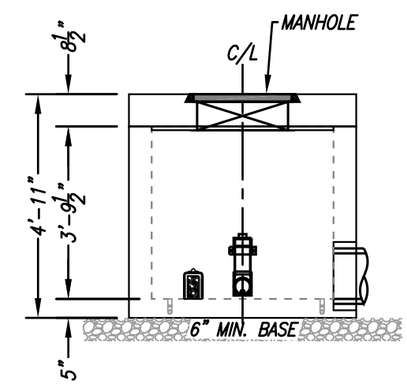

RIGHT END VIEW

TREATMENT FLOW (CFS)	0.160
OPERATING HEAD (FT)	3.1
PRETREATMENT LOADING RATE (GPM/SF)	1.4
WETLAND MEDIA LOADING RATE (GPM/SF)	1.0

INSTALLATION NOTES

1. CONTRACTOR TO PROVIDE ALL LABOR, EQUIPMENT, MATERIALS AND INCIDENTALS REQUIRED TO OFFLOAD AND INSTALL THE SYSTEM AND APPURTENANCES IN ACCORDANCE WITH THIS DRAWING AND THE MANUFACTURERS SPECIFICATIONS, UNLESS OTHERWISE STATED IN MANUFACTURERS CONTRACT.
2. UNIT MUST BE INSTALLED ON LEVEL BASE. MANUFACTURER RECOMMENDS A MINIMUM 6" LEVEL ROCK BASE UNLESS SPECIFIED BY THE PROJECT ENGINEER. CONTRACTOR IS RESPONSIBLE TO VERIFY PROJECT ENGINEERS RECOMMENDED BASE SPECIFICATIONS.
3. ALL PIPES MUST BE FLUSH WITH INSIDE SURFACE OF CONCRETE. (PIPES CANNOT INTRUDE BEYOND FLUSH). INVERT OF OUTFLOW PIPE MUST BE FLUSH WITH DISCHARGE CHAMBER FLOOR. ALL GAPS AROUND PIPES SHALL BE SEALED WATER TIGHT WITH A NON-SHRINK GROUT PER MANUFACTURERS STANDARD CONNECTION DETAIL AND SHALL MEET OR EXCEED REGIONAL PIPE CONNECTION STANDARDS.
4. CONTRACTOR TO SUPPLY AND INSTALL ALL EXTERNAL CONNECTING PIPES.
5. CONTRACTOR RESPONSIBLE FOR INSTALLATION OF ALL RISERS, MANHOLES, AND HATCHES. CONTRACTOR TO GROUT ALL MANHOLES AND HATCHES TO MATCH FINISHED SURFACE UNLESS SPECIFIED OTHERWISE.
6. DRIP OR SPRAY IRRIGATION REQUIRED ON ALL UNITS WITH VEGETATION.
7. CONTRACTOR RESPONSIBLE FOR CONTACTING MODULAR WETLANDS FOR ACTIVATION OF UNIT. MANUFACTURES WARRANTY IS VOID WITH OUT PROPER ACTIVATION BY A MODULAR WETLANDS REPRESENTATIVE.

GENERAL NOTES

1. MANUFACTURER TO PROVIDE ALL MATERIALS UNLESS OTHERWISE NOTED.
2. ALL DIMENSIONS, ELEVATIONS, SPECIFICATIONS AND CAPACITIES ARE SUBJECT TO CHANGE. FOR PROJECT SPECIFIC DRAWINGS DETAILING EXACT DIMENSIONS, WEIGHTS AND ACCESSORIES PLEASE CONTACT MANUFACTURER.

MODULAR WETLANDS

THIS PRODUCT MAY BE PROTECTED BY ONE OR MORE OF THE FOLLOWING US PATENTS: 7,425,262; 7,470,362; 7,674,378; 8,303,816; RELATED FOREIGN PATENTS OR OTHER PATENTS PENDING.

PROPRIETARY AND CONFIDENTIAL:

THE INFORMATION CONTAINED IN THIS DRAWING IS THE SOLE PROPERTY OF MODULAR WETLANDS SYSTEMS. ANY REPRODUCTION IN PART OR AS A WHOLE WITHOUT THE WRITTEN PERMISSION OF MODULAR WETLANDS SYSTEMS IS PROHIBITED.

Bio Clean
A Forterra Company

MWS-L-4-15-V
STORMWATER BIOFILTRATION SYSTEM STANDARD DETAIL

5/28/19 CSINGH

DVERT™

MODULAR WATER QUALITY DIVERSION WEIR SYSTEM

MODULAR WETLANDS™

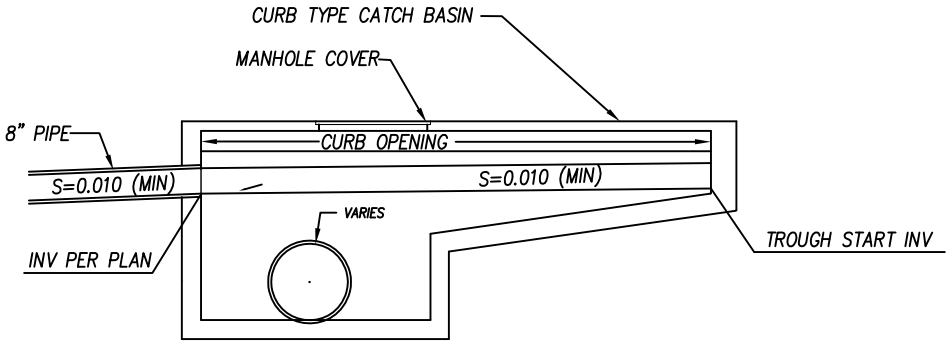

PROFILE - CATCH BASIN

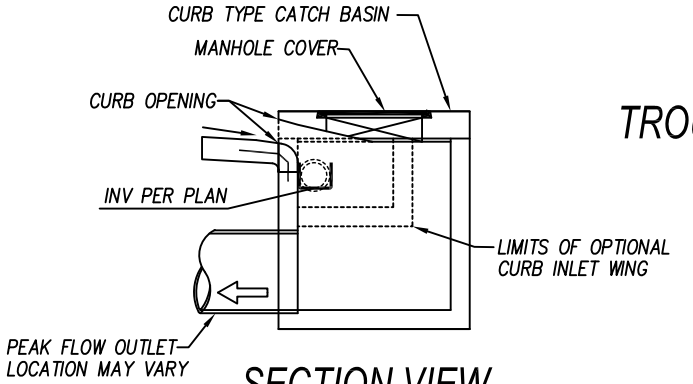

SECTION VIEW

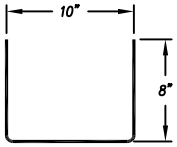

TROUGH END VIEW

TROUGH/PIPE FLOW RATE

PIPE SIZE DIA. (Inches)	8
STATIC HEAD (Inches)	8
SAFETY FACTOR	2
FLOW RATE (cfs)	.74

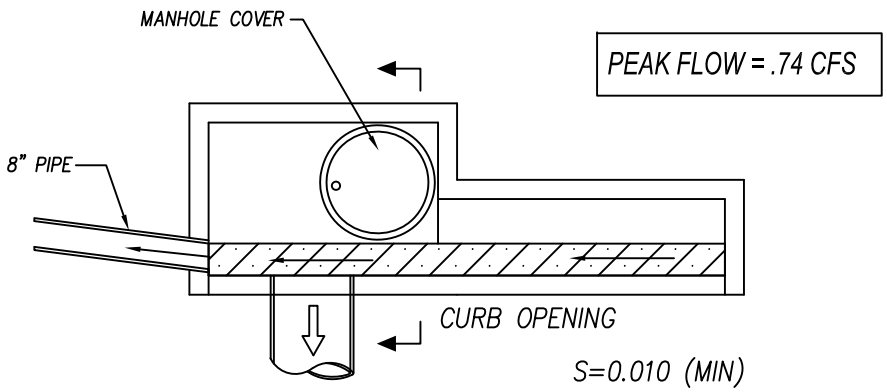

TOP VIEW - CATCH BASIN

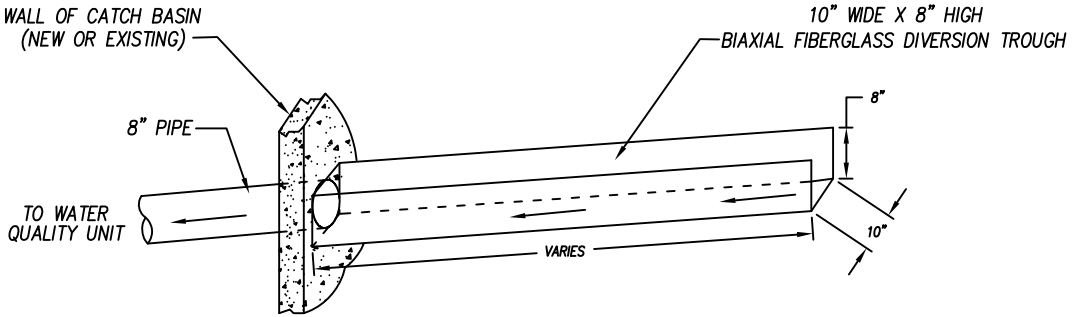

TROUGH ISOMETRIC VIEW

DRAWINGS NOT TO SCALE

PATENT PENDING

INSTALLATION NOTES:

1. TROUGH TO BE CONNECTED TO CONCRETE BELOW CURB OPENING USING 1/2" x 1-1/2" 316 STAINLESS STEEL SPIKE MUSHROOM HEAD DRIVE ANCHORS SPACED 12" ON CENTER
2. USE DAP CONCRETE WATERTIGHT FILLER & SEALANT TO SEAL SEAM BETWEEN FIBERGLASS WEIR & CONCRETE WALL OF CATCH BASIN.

MODULAR WETLAND SYSTEMS INC.
P.O. BOX 869
OCEANSIDE, CA 92049

www.ModularWetlands.com

PROPRIETARY AND CONFIDENTIAL

THE INFORMATION CONTAINED IN THIS DRAWING IS THE SOLE PROPERTY OF MODULAR WETLAND SYSTEMS INC. ANY REPRODUCTION IN PART OR AS A WHOLE WITHOUT THE WRITTEN PERMISSION OF MODULAR WETLAND SYSTEMS INC. IS PROHIBITED.

	NAME	DATE
DRAWN		
EDITED		

COMMENTS:

TITLE: DVERT SYSTEM

SIZE	DWG. NO.	REV
	MWS-DVT-10-8	

SCALE NTS	UNITS = INCHES	SHEET 1 OF 1

MODULAR WETLAND SYSTEMS - LINEAR 2.0
STANDARD DVERT ELEVATIONS

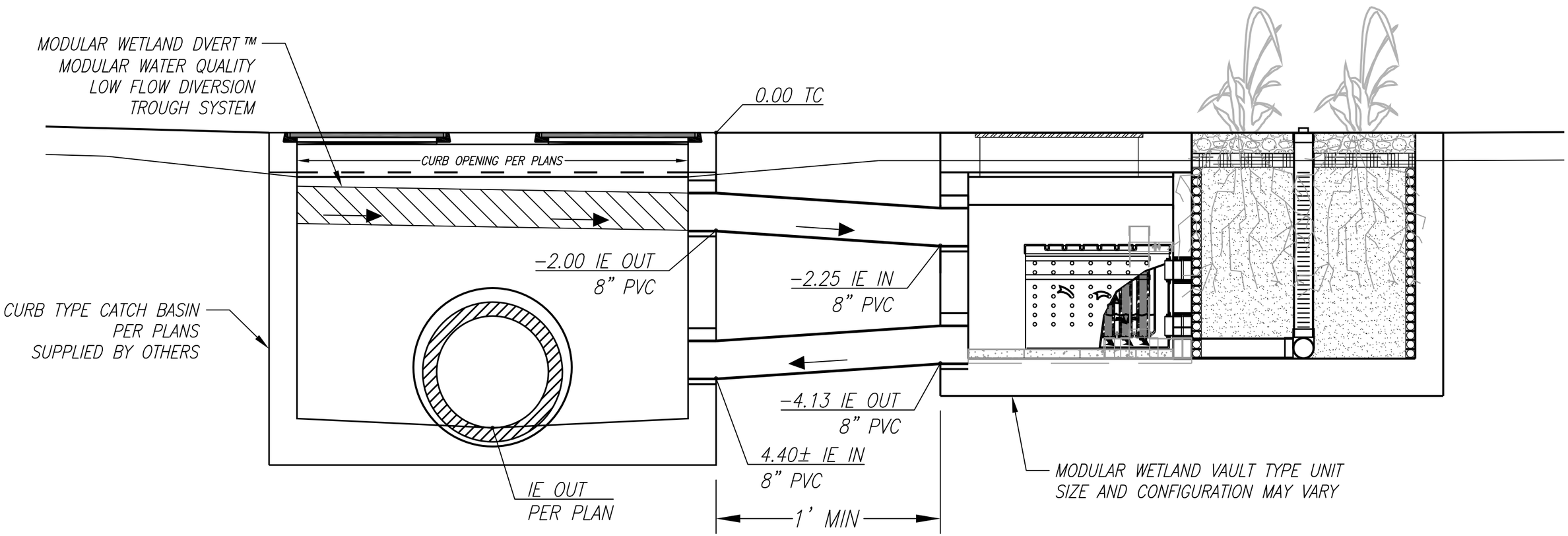

TYPICAL ELEVATION VIEW

MODULAR WETLAND SYSTEMS INC.
P.O. BOX 869
OCEANSIDE, CA 92049
www.ModularWetlands.com

	NAME	DATE
DRAWN		
EDITED		

TITLE: MWS LINEAR 2.0 DVERT SETUP

PROPRIETARY AND CONFIDENTIAL

THE INFORMATION CONTAINED IN THIS DRAWING IS THE SOLE PROPERTY OF MODULAR WETLAND SYSTEMS INC. ANY REPRODUCTION IN PART OR AS A WHOLE WITHOUT THE WRITTEN PERMISSION OF MODULAR WETLAND SYSTEMS INC. IS PROHIBITED.

COMMENTS:

SIZE	DWG. NO.	REV

SCALE NTS | UNITS = INCHES | SHEET 1 OF 1

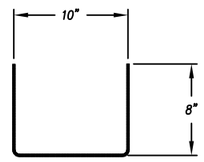

TROUGH END VIEW

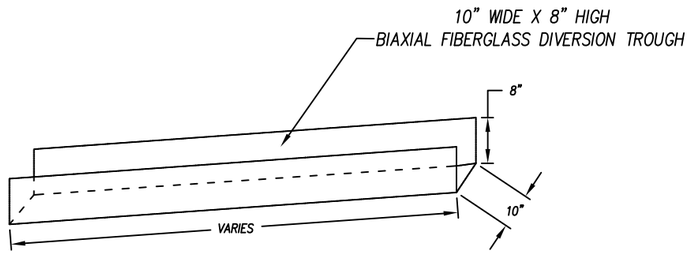

TROUGH ISOMETRIC VIEW

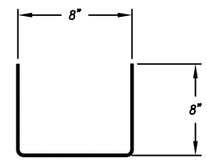

TROUGH END VIEW

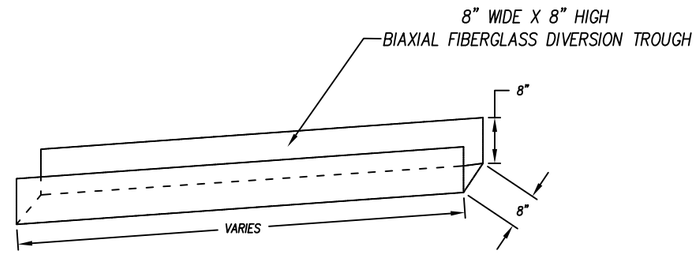

TROUGH ISOMETRIC VIEW

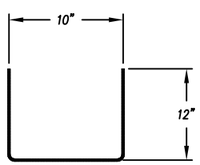

TROUGH END VIEW

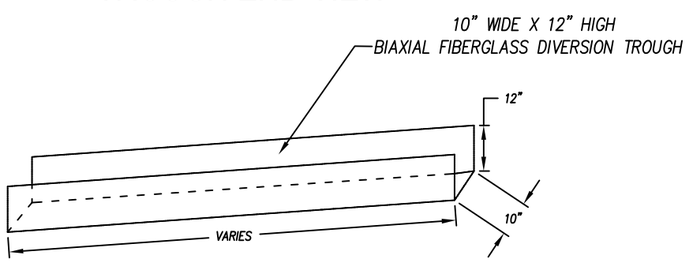

TROUGH ISOMETRIC VIEW

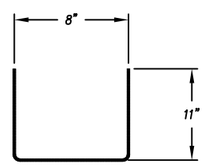

TROUGH END VIEW

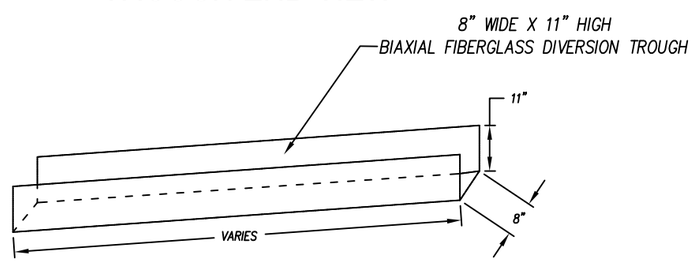

TROUGH ISOMETRIC VIEW

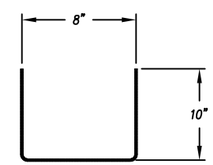

TROUGH END VIEW

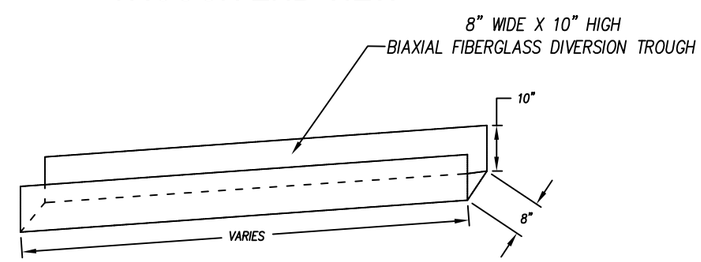

TROUGH ISOMETRIC VIEW

DVERT ™

MODULAR WATER QUALITY DIVERSION WEIR SYSTEM

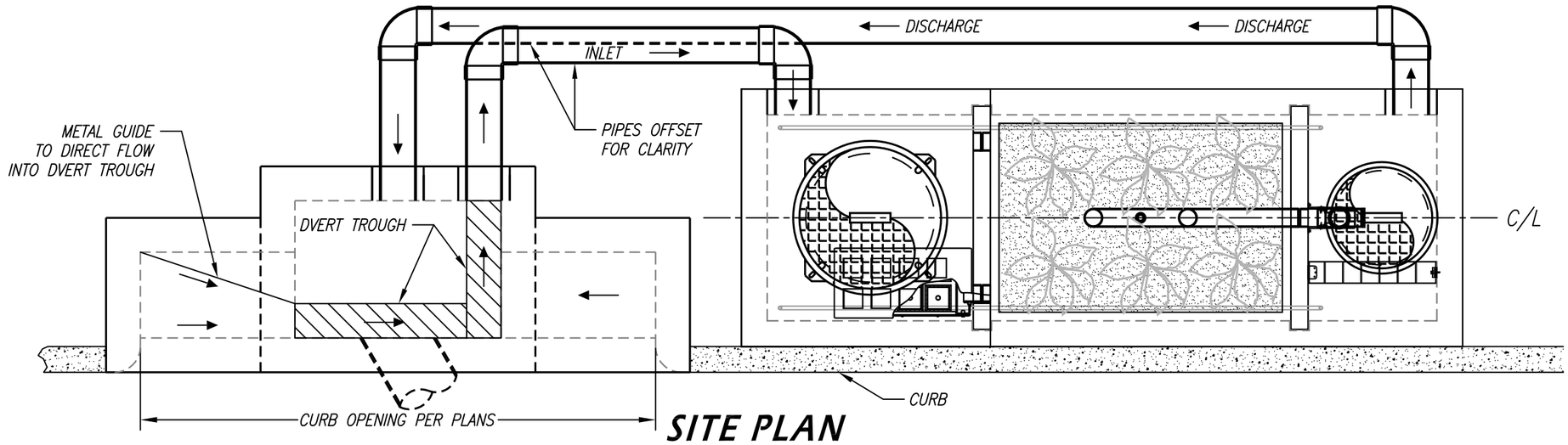

SITE PLAN

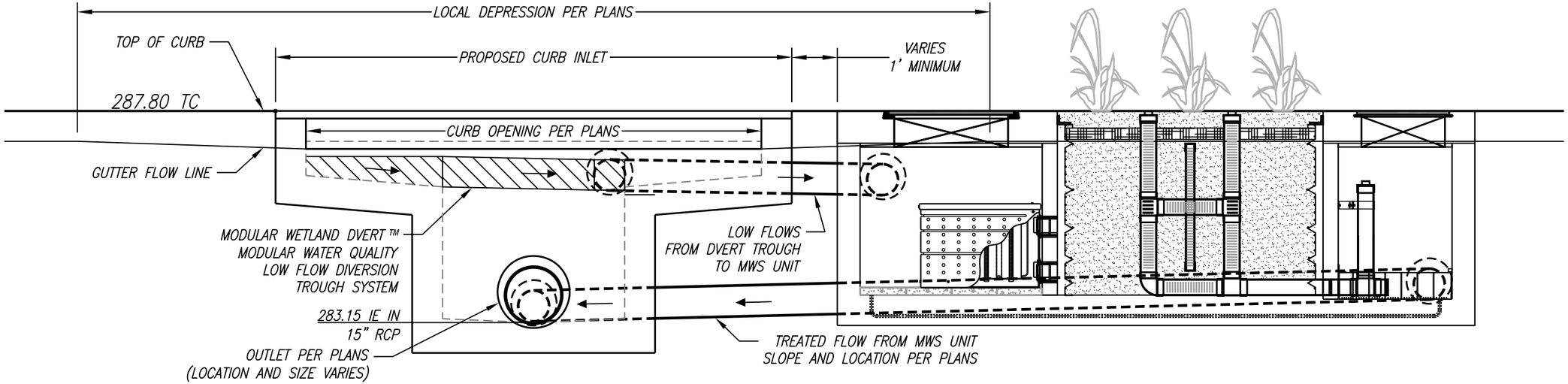

TYPICAL SECTION VIEW

INSTALLATION NOTES:

1. TROUGH TO BE CONNECTED TO CONCRETE BELOW CURB OPENING USING 1/2" x 1-1/2" 316 STAINLESS STEEL SPIKE MUSHROOM HEAD DRIVE ANCHORS SPACED 12" ON CETNTER
2. USE DAP CONCRETE WATERTIGHT FILLER & SEALANT TO SEAL SEAM BETWEEN FIBERGLASS WEIR & CONCRETE WALL OF CATCH BASIN.

MODULAR WETLAND SYSTEMS INC.
P.O. BOX 869
OCEANSIDE, CA 92049
www.ModularWetlands.com

PROPRIETARY AND CONFIDENTIAL

THE INFORMATION CONTAINED IN THIS DRAWING IS THE SOLE PROPERTY OF MODULAR WETLAND SYSTEMS INC. ANY REPRODUCTION IN PART OR AS A WHOLE WITHOUT THE WRITTEN PERMISSION OF MODULAR WETLAND SYSTEMS INC. IS PROHIBITED.

	NAME	DATE
DRAWN		
EDITED		

COMMENTS:

TITLE: DVERT SYSTEM

SIZE	DWG. NO.	REV

SCALE NTS | UNITS = INCHES | SHEET 1 OF 1

FYLLÉ LAM

WetlandMOD Sizies

Project ID	8092
Project Name	Glenelder
Location	Hacienda Heights, CA
Revised Date	

DMA	1.5x Treatment Flow (CFS)	Peak Flows (CFS)	MWS Design
1	0.43	N/K	MWS-8-16
2	0.33	N/K	MWS-8-12
3	0.49	N/K	MWS-8-20
4	0.33	N/K	MWS-8-12
5	0.30	N/K	MWS-8-12
6	0.43	N/K	MWS-8-16
7	0.40	N/K	MWS-8-16
8	1.80	N/K	(3) MWS-8-24

Bio Clean
A Forterra Company

Modular Wetlands System™ Linear

Biofiltration

Comprehensive Stormwater Solutions

Bio Clean
A Forterra Company

OVERVIEW

The Bio Clean Modular Wetlands System™ Linear (MWS Linear) represents a pioneering breakthrough in stormwater technology as the only biofiltration system to utilize patented horizontal flow, allowing for a smaller footprint and higher treatment capacity. While most biofilters use little or no pretreatment, the MWS Linear incorporates an advanced pretreatment chamber that includes separation and pre-filter cartridges. In this chamber, sediment and hydrocarbons are removed from runoff before entering the biofiltration chamber, in turn reducing maintenance costs and improving performance.

The Urban Impact

For hundreds of years, natural wetlands surrounding our shores have played an integral role as nature's stormwater treatment system. But as our cities grow and develop, these natural wetlands have perished under countless roads, rooftops, and parking lots.

Plant A Wetland

Without natural wetlands, our cities are deprived of water purification, flood control, and land stability. Modular Wetlands and the MWS Linear re-establish nature's presence and rejuvenate waterways in urban areas.

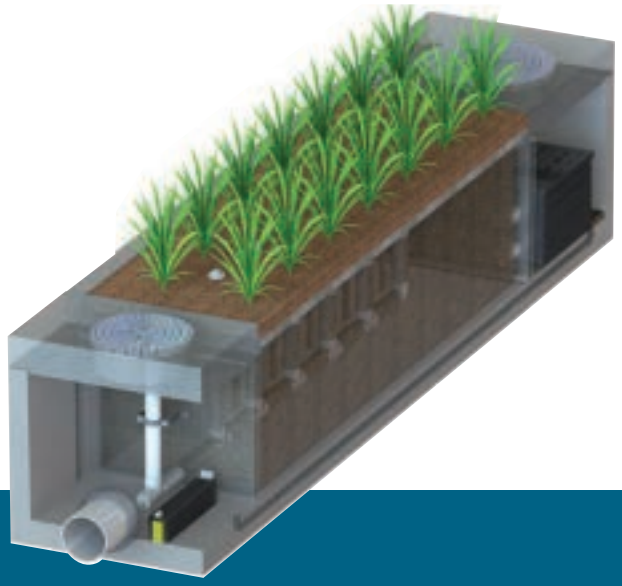

PERFORMANCE

The MWS Linear continues to outperform other treatment methods with superior pollutant removal for TSS, heavy metals, nutrients, hydrocarbons, and bacteria. Since 2007 the MWS Linear has been field tested on numerous sites across the country. With its advanced pretreatment chamber and innovative horizontal flow biofilter, the system is able to effectively remove pollutants through a combination of physical, chemical, and biological filtration processes. With the same biological processes found in natural wetlands, the MWS Linear harnesses nature's ability to process, transform, and remove even the most harmful pollutants.

66% REMOVAL OF DISSOLVED ZINC	69% REMOVAL OF TOTAL ZINC	38% REMOVAL OF DISSOLVED COPPER	64% REMOVAL OF TOTAL PHOSPHORUS	
45% REMOVAL OF NITROGEN	50% REMOVAL OF TOTAL COPPER	95% REMOVAL OF MOTOR OIL	67% REMOVAL OF ORTHO PHOSPHORUS	85% REMOVAL OF TSS

APPROVALS

The MWS Linear has successfully met years of challenging technical reviews and testing from some of the most prestigious and demanding agencies in the nation and perhaps the world.

WASHINGTON STATE TAPE APPROVED

The MWS Linear is approved for General Use Level Designation (GULD) for Basic, Enhanced, and Phosphorus treatment at 1 gpm/ft^2 loading rate. The highest performing BMP on the market for all main pollutant categories.

DEQ ASSIGNMENT

The Virginia Department of Environmental Quality assigned the MWS Linear, the highest phosphorus removal rating for manufactured treatment devices to meet the new Virginia Stormwater Management Program (VSMP) Regulation technical criteria.

MARYLAND DEPARTMENT OF THE ENVIRONMENT APPROVED

Granted Environmental Site Design (ESD) status for new construction, redevelopment, and retrofitting when designed in accordance with the design manual.

MASTEP EVALUATION

The University of Massachusetts at Amherst – Water Resources Research Center issued a technical evaluation report noting removal rates up to 84% TSS, 70% total phosphorus, 68.5% total zinc, and more.

RHODE ISLAND DEM APPROVED

Approved as an authorized BMP and noted to achieve the following minimum removal efficiencies: 85% TSS, 60% pathogens, 30% total phosphorus, and 30% total nitrogen.

ADVANTAGES

- HORIZONTAL FLOW BIOFILTRATION
- GREATER FILTER SURFACE AREA
- PRETREATMENT CHAMBER
- PATENTED PERIMETER VOID AREA
- FLOW CONTROL
- NO DEPRESSED PLANTER AREA
- AUTO DRAINDOWN MEANS NO MOSQUITO VECTOR

OPERATION

The MWS Linear is the most efficient and versatile biofiltration system on the market, and it is the only system with horizontal flow which improves performance, reduces footprint, and minimizes maintenance. Figure 1 and Figure 2 illustrate the invaluable benefits of horizontal flow and the multiple treatment stages.

1 PRETREATMENT

SEPARATION

- Trash, sediment, and debris are separated before entering the pre-filter cartridges
- Designed for easy maintenance access

PRE-FILTER CARTRIDGES

- Over 25 sq. ft. of surface area per cartridge
- Utilizes BioMediaGREEN filter material
- Removes over 80% of TSS and 90% of hydrocarbons
- Prevents pollutants that cause clogging from migrating to the biofiltration chamber

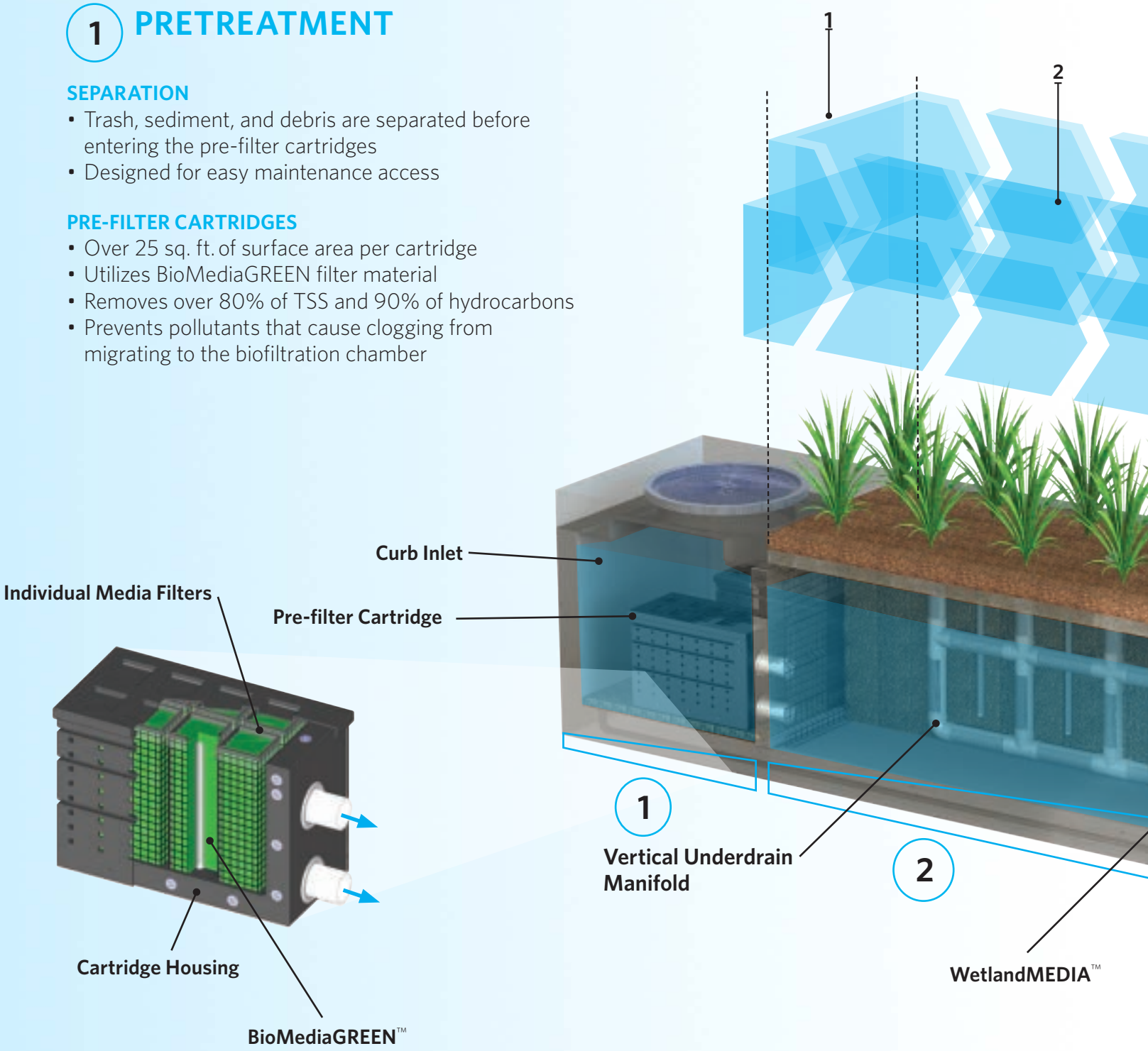

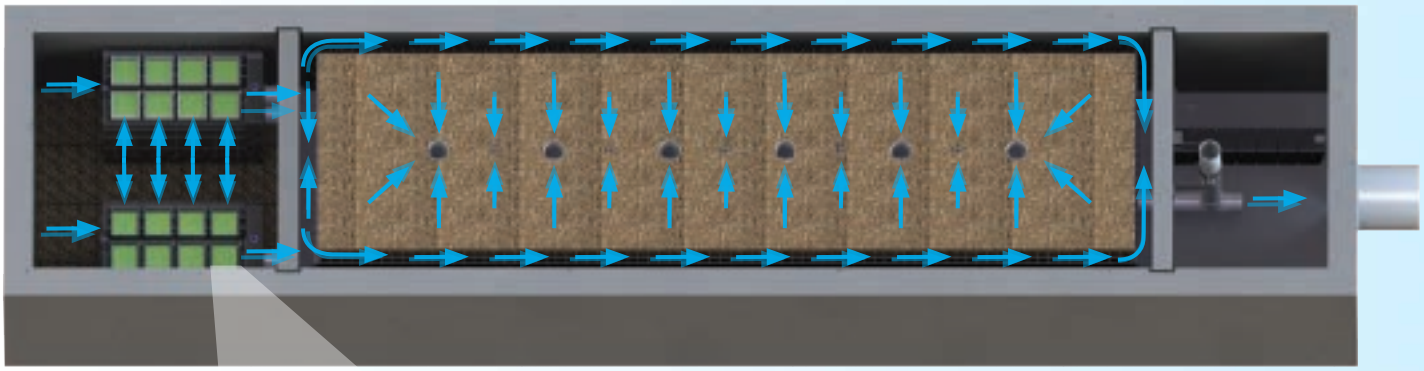

Figure 2,
Top View

2x to 3x more surface area than traditional downward flow bioretention systems.

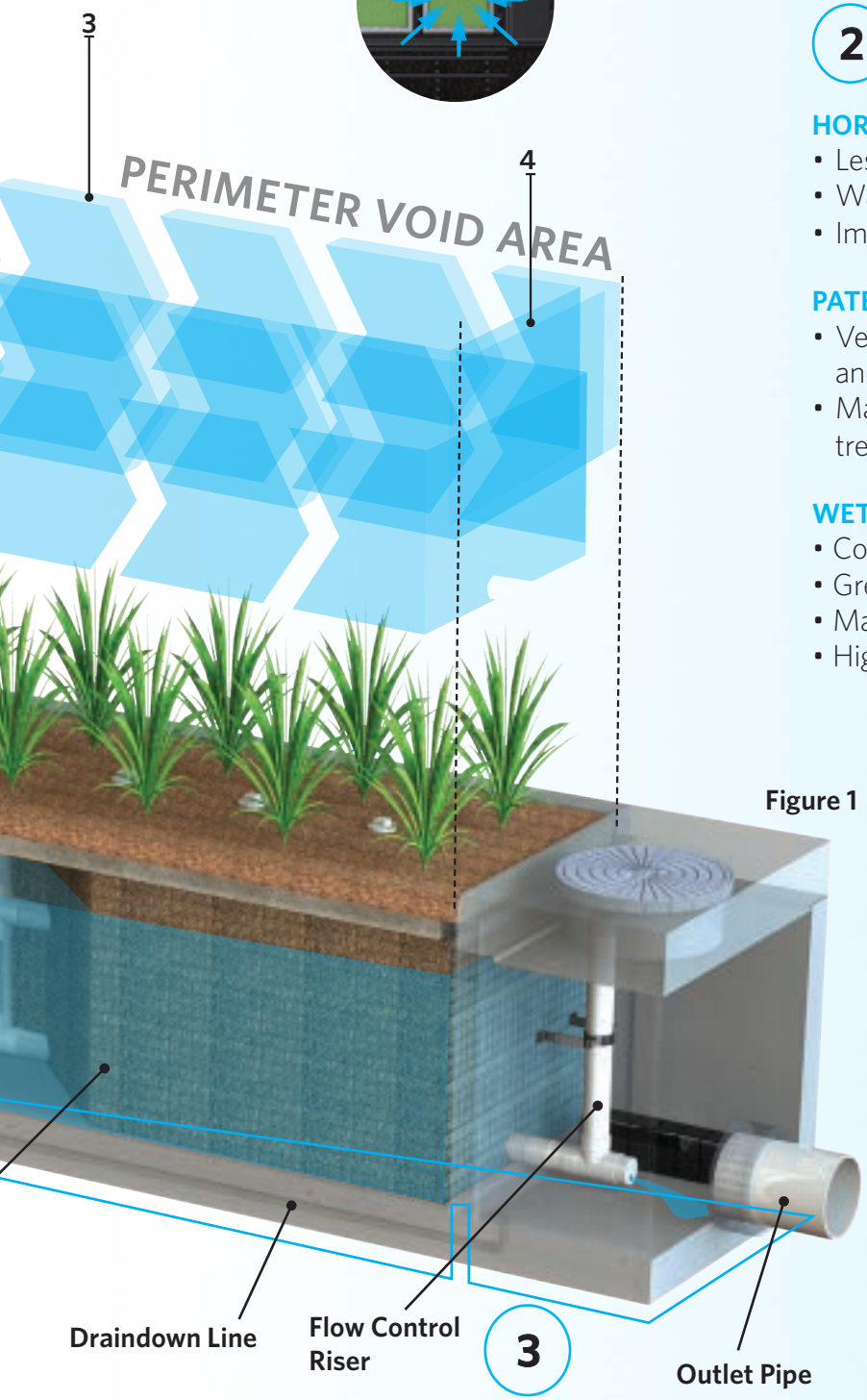

Figure 1

2 BIOFILTRATION

HORIZONTAL FLOW

- Less clogging than downward flow biofilters
- Water flow is subsurface
- Improves biological filtration

PATENTED PERIMETER VOID AREA

- Vertically extends void area between the walls and the WetlandMEDIA on all four sides
- Maximizes surface area of the media for higher treatment capacity

WETLANDMEDIA

- Contains no organics and removes phosphorus
- Greater surface area and 48% void space
- Maximum evapotranspiration
- High ion exchange capacity and lightweight

3 DISCHARGE

FLOW CONTROL

- Orifice plate controls flow of water through WetlandMEDIA to a level lower than the media's capacity
- Extends the life of the media and improves performance

DRAINDOWN FILTER

- The draindown is an optional feature that completely drains the pretreatment chamber
- Water that drains from the pretreatment chamber between storm events will be treated

CONFIGURATIONS

The MWS Linear is the preferred biofiltration system of civil engineers across the country due to its versatile design. This highly versatile system has available "pipe-in" options on most models, along with built-in curb or grated inlets for simple integration into your storm drain design.

CURB TYPE

The Curb Type configuration accepts sheet flow through a curb opening and is commonly used along roadways and parking lots. It can be used in sump or flow-by conditions. Length of curb opening varies based on model and size.

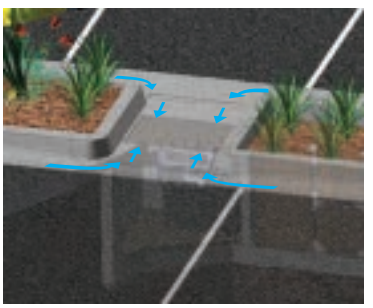

GRATE TYPE

The Grate Type configuration offers the same features and benefits as the Curb Type but with a grated/drop inlet above the systems pretreatment chamber. It has the added benefit of allowing pedestrian access over the inlet. ADA-compliant grates are available to assure easy and safe access. The Grate Type can also be used in scenarios where runoff needs to be intercepted on both sides of landscape islands.

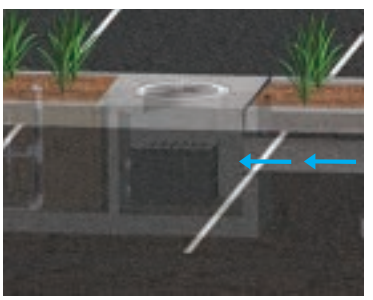

VAULT TYPE

The system's patented horizontal flow biofilter is able to accept inflow pipes directly into the pretreatment chamber, meaning the MWS Linear can be used in end-of-the-line installations. This greatly improves feasibility over typical decentralized designs that are required with other biofiltration/bioretention systems. Another benefit of the "pipe-in" design is the ability to install the system downstream of underground detention systems to meet water quality volume requirements.

DOWNSPOUT TYPE

The Downspout Type is a variation of the Vault Type and is designed to accept a vertical downspout pipe from rooftop and podium areas. Some models have the option of utilizing an internal bypass, simplifying the overall design. The system can be installed as a raised planter, and the exterior can be stuccoed or covered with other finishes to match the look of adjacent buildings.

ORIENTATIONS

SIDE-BY-SIDE

The Side-By-Side orientation places the pretreatment and discharge chamber adjacent to one another with the biofiltration chamber running parallel on either side.This minimizes the system length, providing a highly compact footprint. It has been proven useful in situations such as streets with directly adjacent sidewalks, as half of the system can be placed under that sidewalk. This orientation also offers internal bypass options as discussed below.

END-TO-END

The End-To-End orientation places the pretreatment and discharge chambers on opposite ends of the biofiltration chamber, therefore minimizing the width of the system to 5 ft. (outside dimension). This orientation is perfect for linear projects and street retrofits where existing utilities and sidewalks limit the amount of space available for installation. One limitation of this orientation is that bypass must be external.

BYPASS

INTERNAL BYPASS WEIR (SIDE-BY-SIDE ONLY)

The Side-By-Side orientation places the pretreatment and discharge chambers adjacent to one another allowing for integration of internal bypass. The wall between these chambers can act as a bypass weir when flows exceed the system's treatment capacity, thus allowing bypass from the pretreatment chamber directly to the discharge chamber.

EXTERNAL DIVERSION WEIR STRUCTURE

This traditional offline diversion method can be used with the MWS Linear in scenarios where runoff is being piped to the system. These simple and effective structures are generally configured with two outflow pipes. The first is a smaller pipe on the upstream side of the diversion weir - to divert low flows over to the MWS Linear for treatment. The second is the main pipe that receives water once the system has exceeded treatment capacity and water flows over the weir.

FLOW-BY-DESIGN

This method is one in which the system is placed just upstream of a standard curb or grate inlet to intercept the first flush. Higher flows simply pass by the MWS Linear and into the standard inlet downstream.

DVERT LOW FLOW DIVERSION

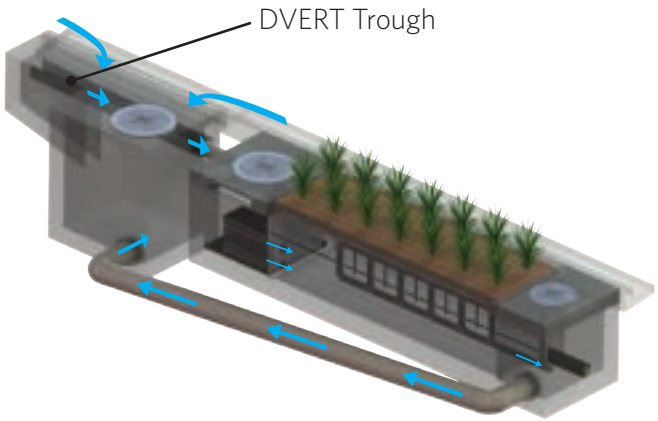

This simple yet innovative diversion trough can be installed in existing or new curb and grate inlets to divert the first flush to the MWS Linear via pipe. It works similar to a rain gutter and is installed just below the opening into the inlet. It captures the low flows and channels them over to a connecting pipe exiting out the wall of the inlet and leading to the MWS Linear. The DVERT is perfect for retrofit and green street applications that allow the MWS Linear to be installed anywhere space is available.

SPECIFICATIONS

FLOW-BASED

The MWS Linear can be used in stand-alone applications to meet treatment flow requirements. Since the MWS Linear is the only biofiltration system that can accept inflow pipes several feet below the surface, it can be used not only in decentralized design applications but also as a large central end-of-the-line application for maximum feasibility.

MODEL #	DIMENSIONS	WETLANDMEDIA SURFACE AREA (sq.ft.)	TREATMENT FLOW RATE (cfs)
MWS-L-4-4	4′ x 4′	23	0.052
MWS-L-4-6	4′ x 6′	32	0.073
MWS-L-4-8	4′ x 8′	50	0.115
MWS-L-4-13	4′ x 13′	63	0.144
MWS-L-4-15	4′ x 15′	76	0.175
MWS-L-4-17	4′ x 17′	90	0.206
MWS-L-4-19	4′ x 19′	103	0.237
MWS-L-4-21	4′ x 21′	117	0.268
MWS-L-6-8	7′ x 9′	64	0.147
MWS-L-8-8	8′ x 8′	100	0.230
MWS-L-8-12	8′ x 12′	151	0.346
MWS-L-8-16	8′ x 16′	201	0.462
MWS-L-8-20	9′ x 21′	252	0.577
MWS-L-8-24	9′ x 25′	302	0.693

SPECIFICATIONS

VOLUME-BASED

Many states require treatment of a water quality volume and do not offer the option of flow-based design. The MWS Linear and its unique horizontal flow makes it the only biofilter that can be used in volume-based design installed downstream of ponds, detention basins, and underground storage systems.

MODEL #	TREATMENT CAPACITY (cu. ft.) @ 24-HOUR DRAINDOWN	TREATMENT CAPACITY (cu. ft.) @ 48-HOUR DRAINDOWN
MWS-L-4-4	1140	2280
MWS-L-4-6	1600	3200
MWS-L-4-8	2518	5036
MWS-L-4-13	3131	6261
MWS-L-4-15	3811	7623
MWS-L-4-17	4492	8984
MWS-L-4-19	5172	10345
MWS-L-4-21	5853	11706
MWS-L-6-8	3191	6382
MWS-L-8-8	5036	10072
MWS-L-8-12	7554	15109
MWS-L-8-16	10073	20145
MWS-L-8-20	12560	25120
MWS-L-8-24	15108	30216

APPLICATIONS

The MWS Linear has been successfully used on numerous new construction and retrofit projects. The system's superior versatility makes it beneficial for a wide range of stormwater and waste water applications - treating rooftops, streetscapes, parking lots, and industrial sites.

INDUSTRIAL

Many states enforce strict regulations for discharges from industrial sites. The MWS Linear has helped various sites meet difficult EPA-mandated effluent limits for dissolved metals and other pollutants.

RESIDENTIAL

Low to high density developments can benefit from the versatile design of the MWS Linear. The system can be used in both decentralized LID design and cost-effective end-of-the-line configurations.

STREETS

Street applications can be challenging due to limited space. The MWS Linear is very adaptable, and it offers the smallest footprint to work around the constraints of existing utilities on retrofit projects.

PARKING LOTS

Parking lots are designed to maximize space and the MWS Linear's 4 ft. standard planter width allows for easy integration into parking lot islands and other landscape medians.

COMMERCIAL

Compared to bioretention systems, the MWS Linear can treat far more area in less space, meeting treatment and volume control requirements.

MIXED USE

The MWS Linear can be installed as a raised planter to treat runoff from rooftops or patios, making it perfect for sustainable "live-work" spaces.

More applications include:

- Agriculture
- Reuse
- Low Impact Development
- Waste Water

PLANT SELECTION

Abundant plants, trees, and grasses bring value and an aesthetic benefit to any urban setting, but those in the MWS Linear do even more - they increase pollutant removal. What's not seen, but very important, is that below grade, the stormwater runoff/flow is being subjected to nature's secret weapon: a dynamic physical, chemical, and biological process working to break down and remove non-point source pollutants. The flow rate is controlled in the MWS Linear, giving the plants more contact time so that pollutants are more successfully decomposed, volatilized, and incorporated into the biomass of the MWS Linear's micro/macro flora and fauna.

A wide range of plants are suitable for use in the MWS Linear, but selections vary by location and climate. View suitable plants by visiting biocleanenvironmental.com/plants.

INSTALLATION

The MWS Linear is simple, easy to install, and has a space-efficient design that offers lower excavation and installation costs compared to traditional tree-box type systems. The structure of the system resembles precast catch basin or utility vaults and is installed in a similar fashion.

The system is delivered fully assembled for quick installation. Generally, the structure can be unloaded and set in place in 15 minutes. Our experienced team of field technicians are available to supervise installations and provide technical support.

MAINTENANCE

Reduce your maintenance costs, man hours, and materials with the MWS Linear. Unlike other biofiltration systems that provide no pretreatment, the MWS Linear is a self-contained treatment train which incorporates simple and effective pretreatment.

Maintenance requirements for the biofilter itself are almost completely eliminated, as the pretreatment chamber removes and isolates trash, sediments, and hydrocarbons. What's left is the simple maintenance of an easily accessible pretreatment chamber that can be cleaned by hand or with a standard vac truck. Only periodic replacement of low-cost media in the pre-filter cartridges is required for long-term operation, and there is absolutely no need to replace expensive biofiltration media.

Bio Clean
A Forterra Company

398 Via El Centro
Oceanside, CA 92058
855.566.3938
stormwater@forterrabp.com
biocleanenvironmental.com

072318R1

Maintenance Guidelines for Modular Wetland System - Linear

Maintenance Summary

- Remove Trash from Screening Device – average maintenance interval is 6 to 12 months.
  - (*5 minute average service time*).
- Remove Sediment from Separation Chamber – average maintenance interval is 12 to 24 months.
  - (*10 minute average service time*).
- Replace Cartridge Filter Media – average maintenance interval 12 to 24 months.
  - (*10-15 minute per cartridge average service time*).
- Replace Drain Down Filter Media – average maintenance interval is 12 to 24 months.
  - (*5 minute average service time*).
- Trim Vegetation – average maintenance interval is 6 to 12 months.
  - (*Service time varies*).

System Diagram

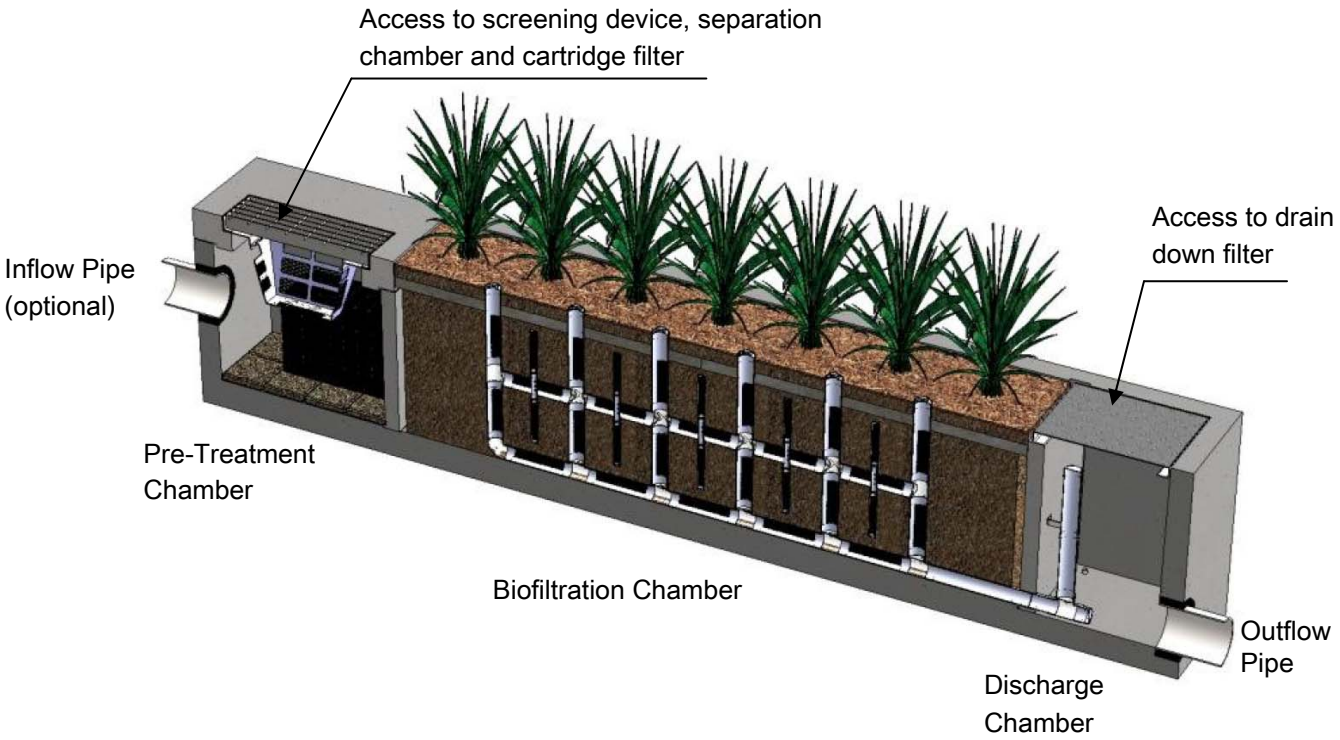

Maintenance Procedures

Screening Device

1. Remove grate or manhole cover to gain access to the screening device in the Pre-Treatment Chamber. Vault type units do not have screening device. Maintenance can be performed without entry.
2. Remove all pollutants collected by the screening device. Removal can be done manually or with the use of a vacuum truck. The hose of the vacuum truck will not damage the screening device.
3. Screening device can easily be removed from the Pre-Treatment Chamber to gain access to separation chamber and media filters below. Replace grate or manhole cover when completed.

Separation Chamber

1. Perform maintenance procedures of screening device listed above before maintaining the separation chamber.
2. With a pressure washer spray down pollutants accumulated on walls and cartridge filters.
3. Vacuum out Separation Chamber and remove all accumulated pollutants. Replace screening device, grate or manhole cover when completed.

Cartridge Filters

1. Perform maintenance procedures on screening device and separation chamber before maintaining cartridge filters.
2. Enter separation chamber.
3. Unscrew the two bolts holding the lid on each cartridge filter and remove lid.
4. Remove each of 4 to 8 media cages holding the media in place.
5. Spray down the cartridge filter to remove any accumulated pollutants.
6. Vacuum out old media and accumulated pollutants.
7. Reinstall media cages and fill with new media from manufacturer or outside supplier. Manufacturer will provide specification of media and sources to purchase.
8. Replace the lid and tighten down bolts. Replace screening device, grate or manhole cover when completed.

Drain Down Filter

1. Remove hatch or manhole cover over discharge chamber and enter chamber.
2. Unlock and lift drain down filter housing and remove old media block. Replace with new media block. Lower drain down filter housing and lock into place.
3. Exit chamber and replace hatch or manhole cover.

Maintenance Notes

1. Following maintenance and/or inspection, it is recommended the maintenance operator prepare a maintenance/inspection record. The record should include any maintenance activities performed, amount and description of debris collected, and condition of the system and its various filter mechanisms.

2. The owner should keep maintenance/inspection record(s) for a minimum of five years from the date of maintenance. These records should be made available to the governing municipality for inspection upon request at any time.

3. Transport all debris, trash, organics and sediments to approved facility for disposal in accordance with local and state requirements.

4. Entry into chambers may require confined space training based on state and local regulations.

5. No fertilizer shall be used in the Biofiltration Chamber.

6. Irrigation should be provided as recommended by manufacturer and/or landscape architect. Amount of irrigation required is dependent on plant species. Some plants may require irrigation.

Maintenance Procedure Illustration

Screening Device

The screening device is located directly under the manhole or grate over the Pre-Treatment Chamber. It's mounted directly underneath for easy access and cleaning. Device can be cleaned by hand or with a vacuum truck.

Separation Chamber

The separation chamber is located directly beneath the screening device. It can be quickly cleaned using a vacuum truck or by hand. A pressure washer is useful to assist in the cleaning process.

Cartridge Filters

The cartridge filters are located in the Pre-Treatment chamber connected to the wall adjacent to the biofiltration chamber. The cartridges have removable tops to access the individual media filters. Once the cartridge is open media can be easily removed and replaced by hand or a vacuum truck.

Drain Down Filter

The drain down filter is located in the Discharge Chamber. The drain filter unlocks from the wall mount and hinges up. Remove filter block and replace with new block.

Trim Vegetation

Vegetation should be maintained in the same manner as surrounding vegetation and trimmed as needed. No fertilizer shall be used on the plants. Irrigation per the recommendation of the manufacturer and or landscape architect. Different types of vegetation requires different amounts of irrigation.

Inspection Form

Modular Wetland System, Inc.
P. 760.433-7640
F. 760-433-3176
E. Info@modularwetlands.com

www.modularwetlands.com

Inspection Report
Modular Wetlands System

For Office Use Only
(Reviewed By)
(Date) Office personnel to complete section to the left.

Project Name _____

Project Address _____ (city) (Zip Code)

Owner / Management Company _____

Contact _____ Phone ( ) –

Inspector Name _____ Date ____/____/____ Time _____ AM / PM

Type of Inspection ☐ Routine ☐ Follow Up ☐ Complaint ☐ Storm Storm Event in Last 72-hours? ☐ No ☐ Yes

Weather Condition _____ Additional Notes _____

Inspection Checklist

Modular Wetland System Type (Curb, Grate or UG Vault): _____ Size (22', 14' or etc.): _____

Structural Integrity:	**Yes**	**No**	**Comments**
Damage to pre-treatment access cover (manhole cover/grate) or cannot be opened using normal lifting pressure?			
Damage to discharge chamber access cover (manhole cover/grate) or cannot be opened using normal lifting pressure?			
Does the MWS unit show signs of structural deterioration (cracks in the wall, damage to frame)?			
Is the inlet/outlet pipe or drain down pipe damaged or otherwise not functioning properly?			
Working Condition:			
Is there evidence of illicit discharge or excessive oil, grease, or other automobile fluids entering and clogging the unit?			
Is there standing water in inappropriate areas after a dry period?			
Is the filter insert (if applicable) at capacity and/or is there an accumulation of debris/trash on the shelf system?			
Does the depth of sediment/trash/debris suggest a blockage of the inflow pipe, bypass or cartridge filter? If yes, specify which one in the comments section. Note depth of accumulation in in pre-treatment chamber.			Depth:
Does the cartridge filter media need replacement in pre-treatment chamber and/or discharge chamber?			Chamber:
Any signs of improper functioning in the discharge chamber? Note issues in comments section.			
Other Inspection Items:			
Is there an accumulation of sediment/trash/debris in the wetland media (if applicable)?			
Is it evident that the plants are alive and healthy (if applicable)? Please note Plant Information below.			
Is there a septic or foul odor coming from inside the system?			

Waste:	**Yes**	**No**
Sediment / Silt / Clay		
Trash / Bags / Bottles		
Green Waste / Leaves / Foliage		

Recommended Maintenance	
No Cleaning Needed	
Schedule Maintenance as Planned	
Needs Immediate Maintenance	

Plant Information	
Damage to Plants	
Plant Replacement	
Plant Trimming	

Additional Notes:

2972 San Luis Rey Road, Oceanside, CA 92058 P (760) 433-7640 F (760) 433-3176

Maintenance Report

Modular Wetland System, Inc.
P. 760.433-7640
F. 760-433-3176
E. Info@modularwetlands.com

www.modularwetlands.com

Cleaning and Maintenance Report
Modular Wetlands System

Project Name _____

Project Address _____
(city) (Zip Code)

Owner / Management Company _____

Contact _____ Phone ( ) –

For Office Use Only
(Reviewed By)
(Date)
Office personnel to complete section to the left.

Inspector Name _____ Date ____/____/_____ Time _____ AM / PM

Type of Inspection ☐ Routine ☐ Follow Up ☐ Complaint ☐ Storm Storm Event in Last 72-hours? ☐ No ☐ Yes

Weather Condition _____ Additional Notes _____

Site Map #	GPS Coordinates of Insert	Manufacturer / Description / Sizing	Trash Accumulation	Foliage Accumulation	Sediment Accumulation	Total Debris Accumulation	Condition of Media 25/50/75/100 (will be changed @ 75%)	Operational Per Manufactures' Specifications (If not, why?)
	Lat: Long:	MWS Catch Basins						
		MWS Sedimentation Basin						
		Media Filter Condition						
		Plant Condition						
		Drain Down Media Condition						
		Discharge Chamber Condition						
		Drain Down Pipe Condition						
		Inlet and Outlet Pipe Condition						

Comments:

2972 San Luis Rey Road, Oceanside, CA 92058 P. 760.433.7640 F. 760.433.3176

ATTACHMENT D OPERATION & MAINTENANCE PLAN

O&M Plan Structural BMP Inspection and Maintenance Responsibility/Frequency Matrix

BMP Inspection and Maintenance Responsibility/Frequency Matrix			
BMP	RESPONSIBILITY	INSPECTION/MAINTENANCE ACTIVITIES	MINIMUM FREQUENCY
Structural BMPs			
Storm Drain Message and Signage (S-1)	HOA	Storm drain stencils shall be inspected for legibility, at minimum, once prior to the storm season, no later than October 1st each year. Those determined to be illegible will be re-stenciled as soon as possible.	Annually
Outdoor Material Storage Areas (S-2)	HOA	Ensure all materials with potential to contaminate runoff be placed in enclosures that prevent contact with runoff or spillage to storm water conveyance system.	Ongoing
Outdoor Trash Storage/Waste Handling Areas (S-3)	HOA	Inspect trash enclosures to ensure proper disposal of trash and pick up of any trash/debris around dumpster has occurred. Inspect for leaks and clean up materials as soon as possible. Ensure lids are closed when not actively used.	Ongoing
Outdoor Vehicle/Equipment/Accessory Wash Area (S-6)	HOA	Ensure minimal wash water is used and that wash water does not enter the storm drain system. Wash area should be in a sump condition and precluded from run-on. Wash water should be collected and disposed of in the sanitary sewer system.	Ongoing
Fuel and Maintenance Area (S-7)	HOA	Inspect with use for spills, proper clean up of spills and materials. Ensure adequate supply of spill cleanup material and proper disposal of wastes.	Ongoing

BMP Inspection and Maintenance Responsibility/Frequency Matrix			
BMP	RESPONSIBILITY	INSPECTION/MAINTENANCE ACTIVITIES	MINIMUM FREQUENCY
Landscape Irrigation Practices (S-8)	HOA	In conjunction with routine maintenance activities, verify that landscape design continues to function properly by adjusting properly to eliminate overspray to hardscape areas, and to verify that irrigation timing and cycle lengths are adjusted in accordance with water demands, given time of year, weather, day or night time temperatures based on system specifications and local climate patterns.	Weekly
Building Materials Selection (S-9)	HOA	In conjunction with routine maintenance activities, alternative building materials that pose minimal potential for pollutant leaching should be considered for use in maintenance and replacement projects for homeowners.	Ongoing
Non-Structural BMPs			
Education of Property Owners, Tenants and Occupants	HOA	Educational materials will be provided to homeowners at close of escrow by the owner and thereafter on an annual basis by the HOA. Materials shall include those provided in Attachment A of this Plan and any updated materials.	Close of escrow and annually.
Activity Restrictions	HOA	The Owner will prescribe activity restrictions to protect surface water quality, through a Covenant, Conditions and Restrictions (CC&Rs) agreement, or other equally effective measure, for the project. Upon takeover of site responsibilities by the HOA, the HOA shall be responsible for ensuring residents compliance. RHCC shall prescribe and implement activity restrictions required of its users and staff.	Ongoing

BMP Inspection and Maintenance Responsibility/Frequency Matrix			
BMP	RESPONSIBILITY	INSPECTION/MAINTENANCE ACTIVITIES	MINIMUM FREQUENCY
Common Area Landscape Management	HOA	Maintenance shall be consistent with City requirements, plus fertilizer and/or pesticide usages shall be consistent with County guidelines for use of fertilizers and pesticides. Maintenance includes mowing, weeding, and debris removal on a weekly basis. Trimming, replanting and replacement of mulch shall be performed on an as-needed basis. Trimmings, clippings, and other waste shall be properly disposed of off-site in accordance with local regulations. Materials temporarily stockpiled during maintenance activities shall be placed away from water courses and drain inlets. Application of landscaping materials shall be limited to minimal amounts required and not within 48 hours prior to predicted rain events.	Weekly
Common Area Litter Control	HOA	Litter patrol, violations investigation, reporting and other litter control activities shall be performed in conjunction with maintenance activities. Litter collection and removal shall be performed on a weekly basis.	Ongoing patrols. Weekly (minimum) pick up and removal.
Street Sweeping Private Streets and Parking Lots	HOA	Streets and parking lots must be swept at least quarterly, including prior to the start of the rainy season (October 1st). Streets shall also be swept as needed.	Quarterly
Storm Water Quality Control Measures			
Proprietary Treatment Control Measures (T-6) – Modular Wetland System	HOA	Inspect for accumulated trash and sediment and to ensure adequate capacity. Clean out accumulated materials as necessary via vactor truck.	Clean inserts prior to rain season and as needed.

ATTACHMENT E BMP INSPECTION MAINTENANCE RECORDS

ATTACHMENT F EDUCATIONAL MATERIALS

W.O. 3916-28X