APPENDIX I
HYDROLOGY STUDIES

APPENDIX I-1
HYDROLOGY REPORT
(ON-SITE)

HYDROLOGY REPORT

City of Santa Clarita

Shadowbox Studios

TR 83513

Prepared For:
LA Railroad 93, LLC
1415 Constitution Road SE,
Atlanta, GA 30316

Prepared By:
Alliance Land Planning & Engineering, Inc.
2248 Faraday Ave.
Carlsbad, CA 92008

SEPTEMBER 13, 2022

JN 2026

Table of Contents

PROJECT DESCRIPTION 1
METHODOLOGY 1
DESIGN STORM EVENT 1
EXISTING CONDITION DRAINAGE 1
DEVELOPED CONDITION DRAINAGE 2
RESULTS 2
WATER QUALITY 3
HYDROMODIFICATION 3
DRAINAGE BASIN MODPULS 4
CONCLUSION 4

List of Appendices

Appendix A – Time of Concentration (TC)
Appendix B – Hydrologic Modeling Output (LAR04)
Appendix C – Hydromodification Volume and Basin Flowthru Calcs
Appendix D – Hydromodification Basin Flowrate Modpuls Calcs
Appendix E – City/County Splitter Manhole Manning Calculation
Appendix F – Hydrology Maps

Project Description

The Shadowbox project is an approximately 93.5-acre studio project located in the City of Santa Clarita. The proposed project includes sound stages, parking lots, a utilities/facilities building, support buildings, an office building, landscaping, and hardscape. The project site is currently undeveloped land. Shadowbox is bordered by 13th Street, Arch Street, and 12th Street to the South/Southeast, the existing homes off Alderbrook Drive to the North-East, existing homes to the North, and the Metrolink Jan Heidt Newhall Station on the Southwest.

Methodology

Methods currently outlined in the Los Angeles County Hydrology Manual have been used throughout this study. Time of concentration (TC) values were calculated using County of Los Angeles, HydroCalc software. To calculate TC's, HydroCalc uses a subarea's acreage, flow path length/slope, imperviousness, and some of the info provided in Table 1 below. Refer to Appendix A for full TC calculations.

Flowrates were calculated using the Modified Rational Method and County of Los Angeles approved, LAR04 software. Even though HydroCalc does calculate flowrates those values are not approved for use. A summary of general hydrologic parameters is taken from the relevant 50-yr, 24-hr isohyetal map is provided in Table 1 below. The hydrologic parameters map is provided in Appendix A.

Table 1 - General Hydrologic Parameters

Parameter	Value
50-yr. 24-Hr Isohyetal Map	Newhall
50-yr Inches of Rainfall (24 Hours)	8.1 in
Soil Classification Area	20
Debris Potential Area (DPA Zone)	9

Design Storm Event

The design storm event modeled for this project follows Los Angeles County criteria utilizing a 25-yr storm event for onsite developed subareas and 50-year for undeveloped subareas.

Existing Condition Drainage

The main project site currently drains in a northwest direction and into either Placerita Creek or goes under the Metrolink railroad via two drainpipes which then convey the stormwater into two RCB's that go under Railroad Avenue and connects to Newhall Creek. The section of the site north of Placerita Creek also drains to the northwest and is conveyed within drain lines under the railroad and Railroad Avenue which connects to the South Fork of the Santa Clara River.

Developed Condition Drainage

In the developed condition, all runoff from the project will be captured, in a closed pipe system, and conveyed to Placerita Creek. Prior to discharging into Placerita Creek the first-flush runoff will be routed through either a system of underground infiltration chambers or an infiltration/drainage basin. Additionally, offsite runoff coming from under 12th street will be route through the site to Placerita Creek. A portion of this offsite stormwater, during peak storm events, will be routed to the infiltration/drainage basin to offset the developed hydromodification flowrate and volume requirements. In addition, existing stormwater flows from 13th street will be conveyed through the project site to the existing downstream Metrolink drainlines. The 13th street drainage system is part of the City's Dockweiler roadway plans and that storm drain will be maintained by LACFCD.

Results

During the flood events the project will outlet flow to Placerta Creek. The total flowrate generated by the developed project is 183.15 cfs. Table 2 shows a summary of the existing (25 yr) vs developed (design) flowrate.

Table 2 – Existing VS Developed Flowrates

PROJECT	FLOWRATE Q
	cfs
Q_Developed	183.15
Q_Existing	124.90
Δ	58.25
Drainage Basin A	105.50
Drainage Basin D Outlet	19.05
Total Dev Project Outlet	124.55
Detained Q	58.60
Overall Q Reduction	0.35

To bring the total project outlet flowrate down to or below the existing tributary flowrate of 124.90 cfs, at least 100 cfs of stormwater will be conveyed to the infiltration/drainage basin. The 100 cfs routed to the infiltration basin is for storm events greater than or equal to the 10 year storm event, and is necessary to achieve the required flow rate and volume hydromodification goals. A Modpuls analysis was done on the drainage/infiltration basin to confirm the flow allowed to leave the drainage basin to will not exceed the allowable rate to match existing conditions. As shown in Table 2 above, the developed condition storm flows will have an overall tributary flow reduction of 0.35 cfs.

Water Quality

Water quality aspects of this project are covered separately within the USMP/LID Report. Water quality treatment will be achieved through the use of underground infiltration chambers and the project infiltration/drainage basin. See the USMP report for additional info and details.

Table 3 – Water Quality Treatment Volume

TREATMENT FACILITY	REQUIRED VOLUME	PROVIDED VOLUME	Δ
	ac-ft	ac-ft	ac-ft
UG Infil Chambers	3.47	3.51	0.04
Drainage Basin	1.48	17.56	16.08

Hydromodification

This project discharges to Placerita Creek and to mitigate increased developed condition flows and volume, hydromodification is being implemented on the project. During large storm events, flow will be diverted to the drainage/infiltration basin at the north side of the site. This basin will infiltrate and detain the increased 10-year storm volume and increased 25-year flowrate, as required by hydromodification guidelines. The section below describes the calculations for reducing the project outflow to the 25yr existing flowrate (also see Appendix D). Table 4 shows a summary of the existing vs developed volume of the 10-year condition.

Table 4 – Existing VS Developed Volume

PROJECT	VOLUME V
	ac-ft
V_Developed	30.34
V_Existing	9.39
Δ	20.95

Appendix C shows how diverting up to 100 cfs from the offsite drain line is required to meet the project hydromod capture volume. In addition to the 100 cfs flows that are taken from the offsite drain line, all the flow associated with Basin D (which are the parking lots adjacent to the main site) are routed to the drainage basin at the north end of the site.

Drainage Basin Modpuls

A Modpuls analysis was run on the proposed drainage/infiltration basin to ensure that the basin would outlet 19.05 cfs and hold the required ponding volume. With the main studio discharging 105.50 cfs, the drainage basin can release a maximum of 19.4 cfs to have the total project outlet flowrate be at or under the Q_Existing (124.9 cfs). The inflow hydrograph used for this calculation is the 10-year offsite hydrograph (for flow volume generated between 40 cfs and 140 cfs) added to the Basin D's developed design hydrograph. 40 cfs was used as a threshold for bypassing the infiltration basin in an effort to reserve the basin water quality volume to meet onsite water quality requirements. The outflow rating curve was calculated by assuming that there is only infiltration occurring up to the water quality volume depth at 1.75 ft (1.7 ac-ft provided, 1.48 ac-ft required). In addition to infiltration, above 1.75 ft a 1.39 sf restrictor plate inlet will allow the basin to drain over the course of the storm event while only releasing 19.05 cfs to outlet when the basin is full. See Appendix D for the full Modpuls calculations.

Conclusion

Through the use of an infiltration/detention basin and underground infiltration chambers we are meeting the hydromodification goals as outlined above. Therefore, it is concluded that the project will have no negative impact on the existing downstream drainage system.

APPENDIX A

TIME OF CONCENTRATION (TC)

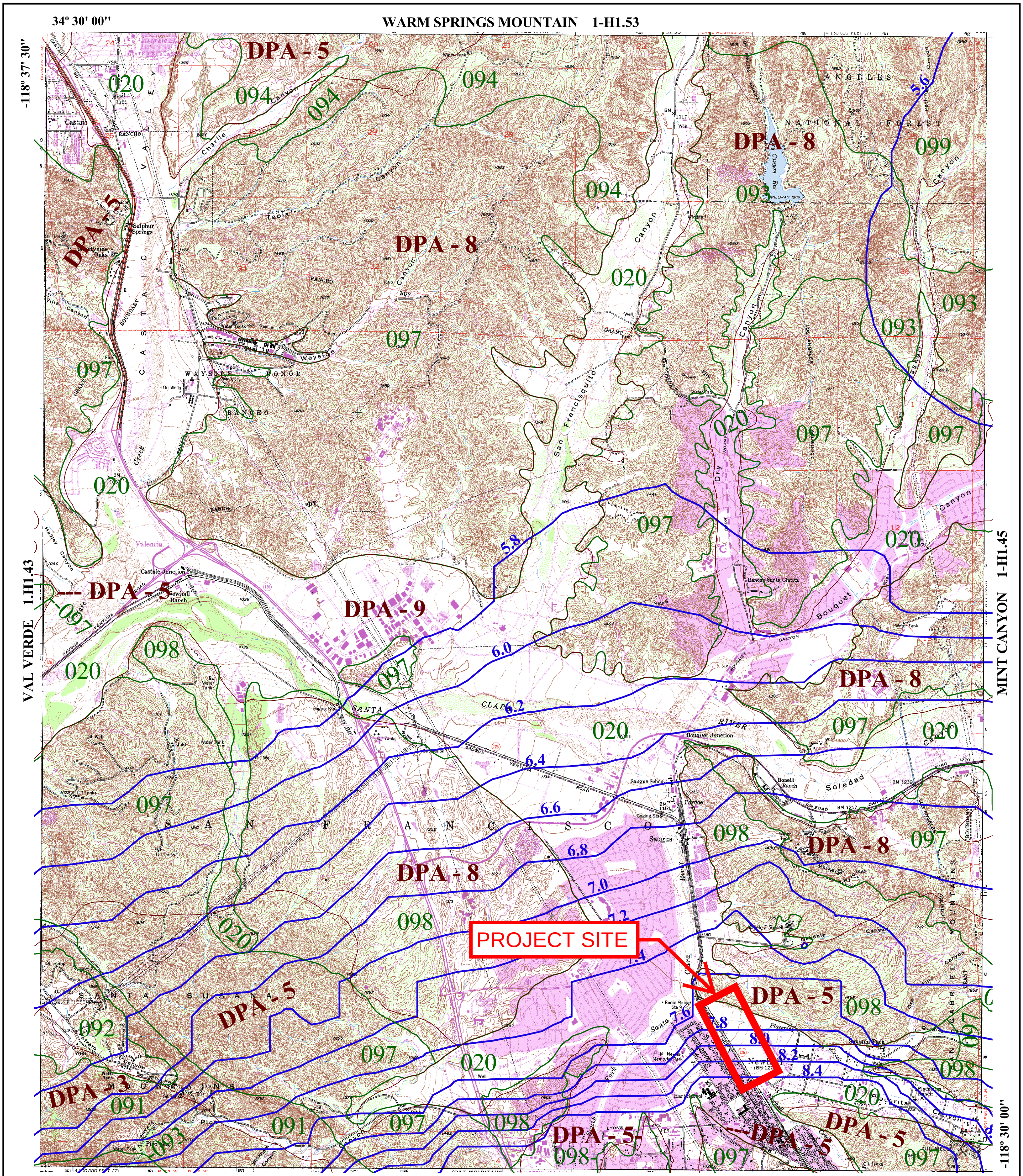

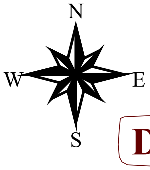

016 SOIL CLASSIFICATION AREA

7.2 INCHES OF RAINFALL

DPA - 6 DEBRIS POTENTIAL AREA

1 0 1 2 Miles

25-YEAR 24-HOUR ISOHYET REDUCTION FACTOR: 0.878
10-YEAR 24-HOUR ISOHYET REDUCTION FACTOR: 0.714

N E W H A L L

1-H1.44

50-YEAR 24-HOUR ISOHYET

LOS ANGELES COUNTY PUBLIC WORKS Public Service That Works

BLACKHALL STUDIOS

DEVELOPED CONDITION TC's

BASIN A & BASIN D

BLACKHALL STUDIOS

DEVELOPED CONDITION TC's

10-YR

Peak Flow Hydrologic Analysis

File location: I:/Project Files/2026 - BLACKHALL STUDIOS/HYDROLOGY/ONSITE/HYDROCALC/DEV/BLACKHALL - DEV 10-YR Report_011022.pdf
Version: HydroCalc 1.0.3

Input Parameters

Project Name	BLACKHALL - DEV 10-YR
Subarea ID	1A
Area (ac)	15.3
Flow Path Length (ft)	1770.0
Flow Path Slope (vft/hft)	0.011
50-yr Rainfall Depth (in)	8.1
Percent Impervious	0.9
Soil Type	20
Design Storm Frequency	10-yr
Fire Factor	0
LID	False

Output Results

Modeled (10-yr) Rainfall Depth (in)	5.7834
Peak Intensity (in/hr)	1.9974
Undeveloped Runoff Coefficient (Cu)	0.5157
Developed Runoff Coefficient (Cd)	0.8616
Time of Concentration (min)	16.0
Clear Peak Flow Rate (cfs)	26.3299
Burned Peak Flow Rate (cfs)	26.3299
24-Hr Clear Runoff Volume (ac-ft)	6.0421
24-Hr Clear Runoff Volume (cu-ft)	263193.1187

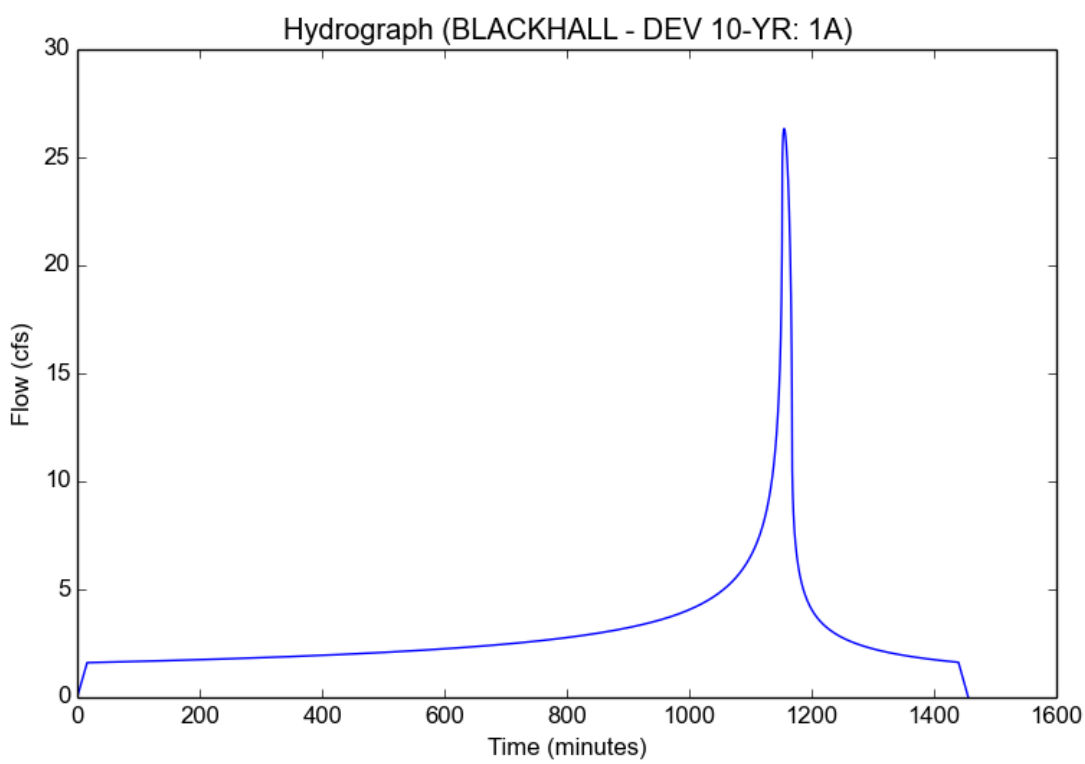

Peak Flow Hydrologic Analysis

File location: I:/Project Files/2026 - BLACKHALL STUDIOS/HYDROLOGY/ONSITE/HYDROCALC/DEV/BLACKHALL - DEV 10-YR Report_011022.pdf
Version: HydroCalc 1.0.3

Input Parameters

Project Name	BLACKHALL - DEV 10-YR
Subarea ID	2A
Area (ac)	37.7
Flow Path Length (ft)	2450.0
Flow Path Slope (vft/hft)	0.008
50-yr Rainfall Depth (in)	8.1
Percent Impervious	0.9
Soil Type	20
Design Storm Frequency	10-yr
Fire Factor	0
LID	False

Output Results

Modeled (10-yr) Rainfall Depth (in)	5.7834
Peak Intensity (in/hr)	1.7578
Undeveloped Runoff Coefficient (Cu)	0.4821
Developed Runoff Coefficient (Cd)	0.8582
Time of Concentration (min)	21.0
Clear Peak Flow Rate (cfs)	56.8711
Burned Peak Flow Rate (cfs)	56.8711
24-Hr Clear Runoff Volume (ac-ft)	14.8858
24-Hr Clear Runoff Volume (cu-ft)	648425.6117

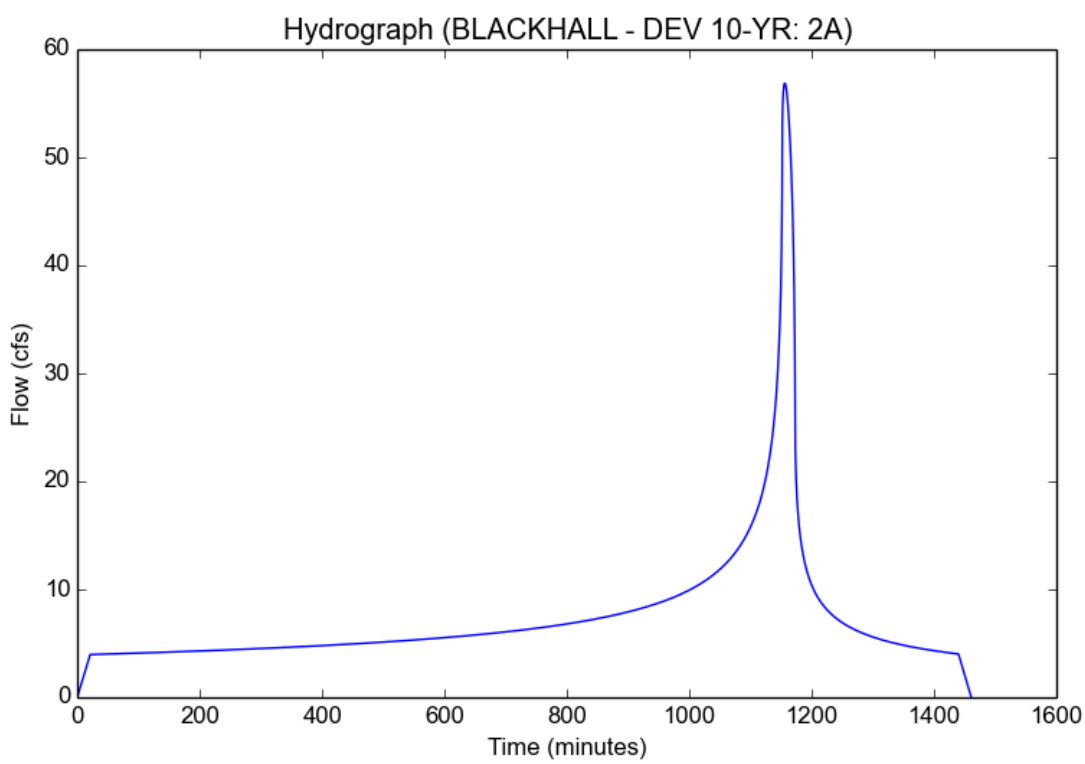

Peak Flow Hydrologic Analysis

File location: I:/Project Files/2026 - BLACKHALL STUDIOS/HYDROLOGY/ONSITE/HYDROCALC/DEV/BLACKHALL - DEV 10-YR Report_011022.pdf
Version: HydroCalc 1.0.3

Input Parameters

Project Name	BLACKHALL - DEV 10-YR
Subarea ID	1D
Area (ac)	13.2
Flow Path Length (ft)	2500.0
Flow Path Slope (vft/hft)	0.01
50-yr Rainfall Depth (in)	8.1
Percent Impervious	0.7
Soil Type	20
Design Storm Frequency	10-yr
Fire Factor	0
LID	False

Output Results

Modeled (10-yr) Rainfall Depth (in)	5.7834
Peak Intensity (in/hr)	1.7197
Undeveloped Runoff Coefficient (Cu)	0.4767
Developed Runoff Coefficient (Cd)	0.773
Time of Concentration (min)	22.0
Clear Peak Flow Rate (cfs)	17.5479
Burned Peak Flow Rate (cfs)	17.5479
24-Hr Clear Runoff Volume (ac-ft)	4.2791
24-Hr Clear Runoff Volume (cu-ft)	186395.7305

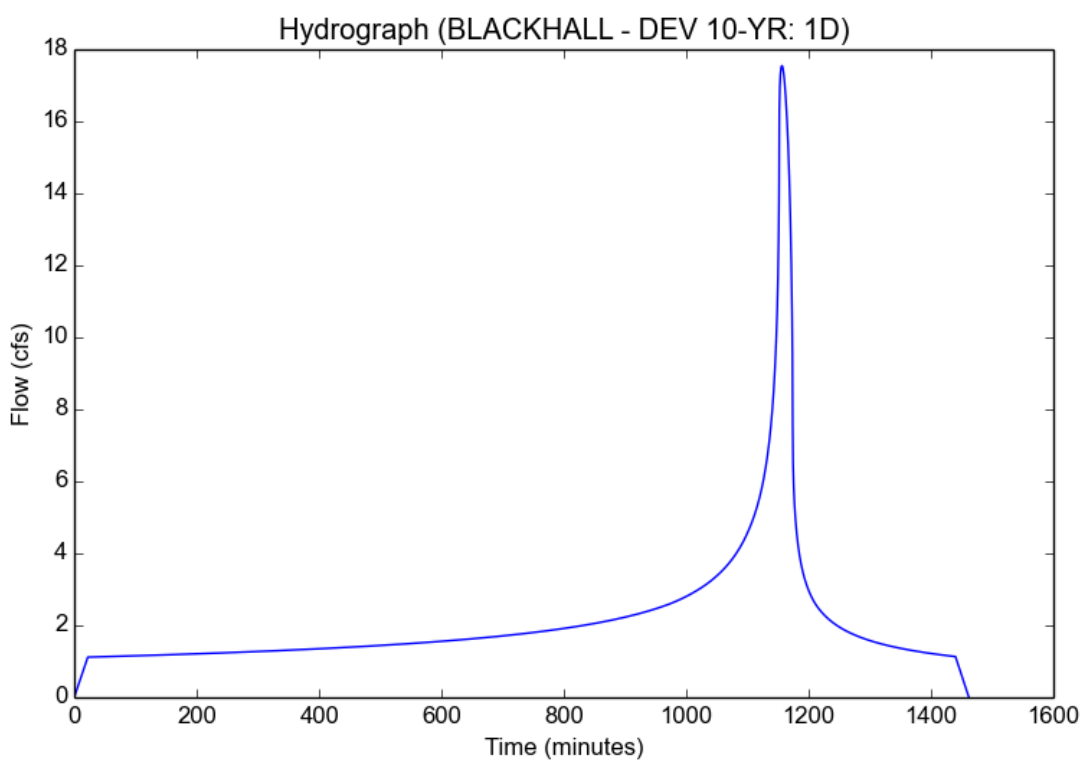

Peak Flow Hydrologic Analysis

File location: I:/Project Files/2026 - BLACKHALL STUDIOS/HYDROLOGY/ONSITE/HYDROCALC/DEV/BLACKHALL - DEV 10-YR Report_011022.pdf
Version: HydroCalc 1.0.3

Input Parameters

Project Name	BLACKHALL - DEV 10-YR
Subarea ID	2D
Area (ac)	1.7
Flow Path Length (ft)	555.0
Flow Path Slope (vft/hft)	0.014
50-yr Rainfall Depth (in)	8.1
Percent Impervious	0.6
Soil Type	20
Design Storm Frequency	10-yr
Fire Factor	0
LID	False

Output Results

Modeled (10-yr) Rainfall Depth (in)	5.7834
Peak Intensity (in/hr)	2.7666
Undeveloped Runoff Coefficient (Cu)	0.5855
Developed Runoff Coefficient (Cd)	0.7742
Time of Concentration (min)	8.0
Clear Peak Flow Rate (cfs)	3.6412
Burned Peak Flow Rate (cfs)	3.6412
24-Hr Clear Runoff Volume (ac-ft)	0.4921
24-Hr Clear Runoff Volume (cu-ft)	21435.0907

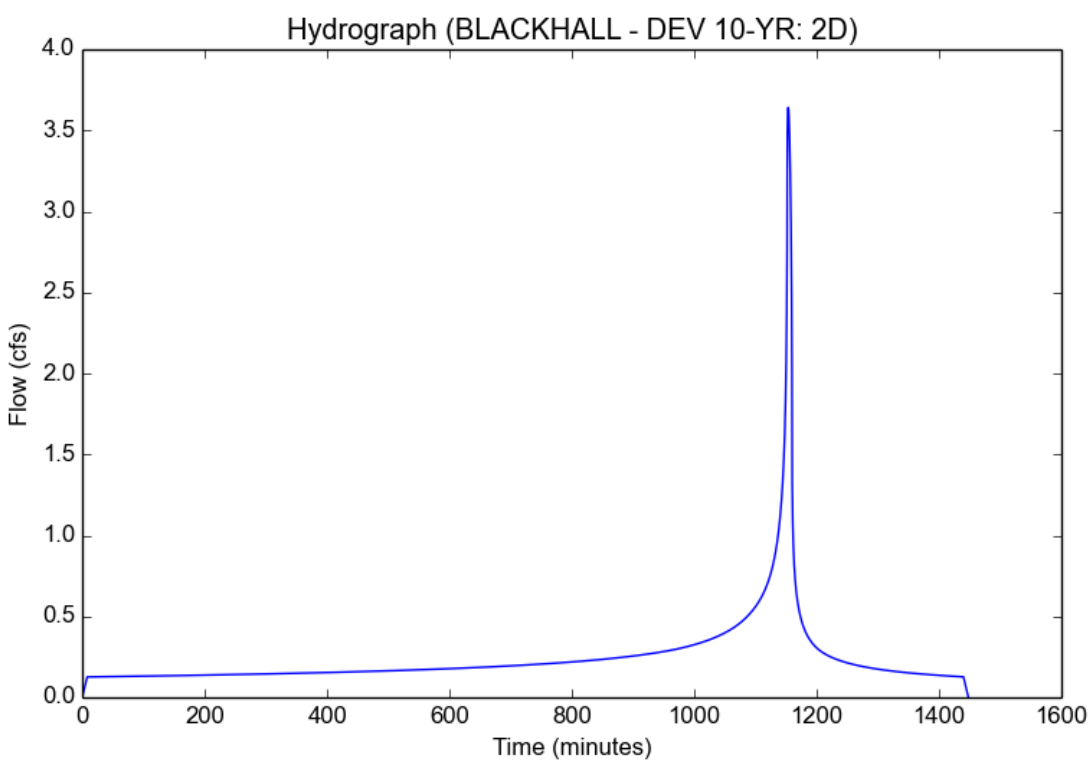

Peak Flow Hydrologic Analysis

File location: I:/Project Files/2026 - BLACKHALL STUDIOS/HYDROLOGY/ONSITE/HYDROCALC/DEV/BLACKHALL - DEV 10-YR Report_011022.pdf
Version: HydroCalc 1.0.3

Input Parameters

Project Name	BLACKHALL - DEV 10-YR
Subarea ID	3D
Area (ac)	12.1
Flow Path Length (ft)	870.0
Flow Path Slope (vft/hft)	0.011
50-yr Rainfall Depth (in)	8.1
Percent Impervious	0.8
Soil Type	20
Design Storm Frequency	10-yr
Fire Factor	0
LID	False

Output Results

Modeled (10-yr) Rainfall Depth (in)	5.7834
Peak Intensity (in/hr)	2.4912
Undeveloped Runoff Coefficient (Cu)	0.5605
Developed Runoff Coefficient (Cd)	0.8321
Time of Concentration (min)	10.0
Clear Peak Flow Rate (cfs)	25.0822
Burned Peak Flow Rate (cfs)	25.0822
24-Hr Clear Runoff Volume (ac-ft)	4.3531
24-Hr Clear Runoff Volume (cu-ft)	189622.2659

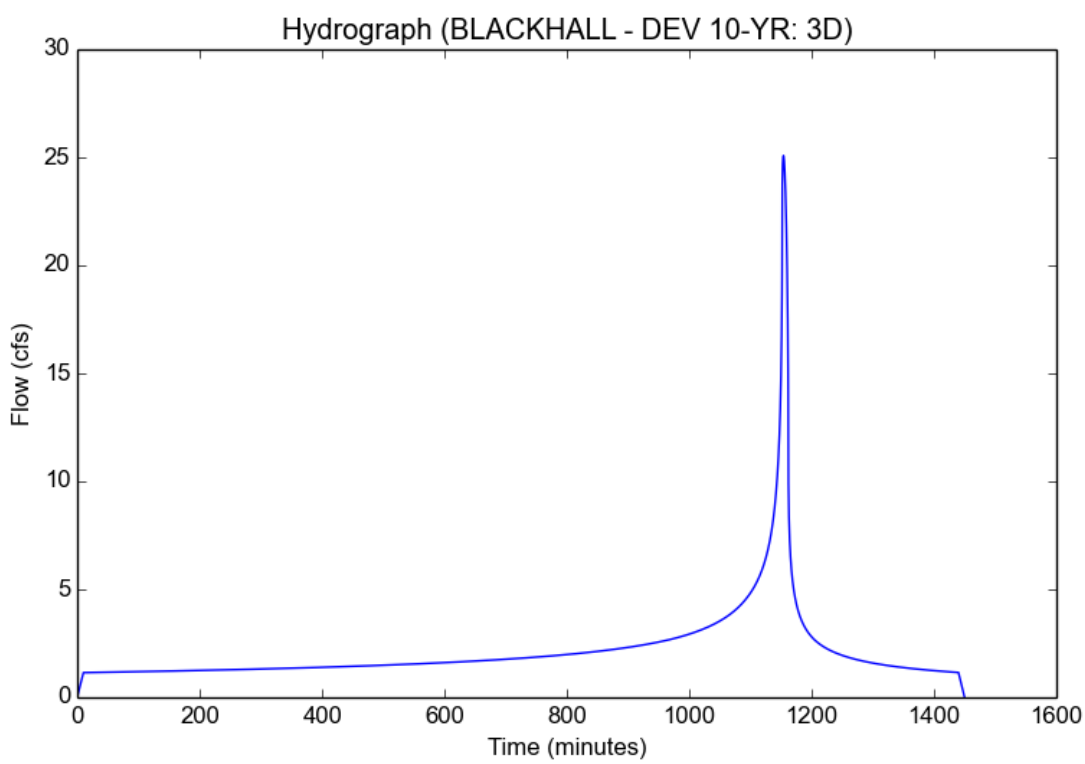

Peak Flow Hydrologic Analysis

File location: I:/Project Files/2026 - BLACKHALL STUDIOS/HYDROLOGY/ONSITE/HYDROCALC/DEV/BLACKHALL - DEV 10-YR Report_011022.pdf
Version: HydroCalc 1.0.3

Input Parameters

Project Name	BLACKHALL - DEV 10-YR
Subarea ID	4D
Area (ac)	7.3
Flow Path Length (ft)	1160.0
Flow Path Slope (vft/hft)	0.34
50-yr Rainfall Depth (in)	8.1
Percent Impervious	0.05
Soil Type	20
Design Storm Frequency	10-yr
Fire Factor	0
LID	False

Output Results

Modeled (10-yr) Rainfall Depth (in)	5.7834
Peak Intensity (in/hr)	2.7666
Undeveloped Runoff Coefficient (Cu)	0.5855
Developed Runoff Coefficient (Cd)	0.6012
Time of Concentration (min)	8.0
Clear Peak Flow Rate (cfs)	12.1416
Burned Peak Flow Rate (cfs)	12.1416
24-Hr Clear Runoff Volume (ac-ft)	0.7007
24-Hr Clear Runoff Volume (cu-ft)	30521.4088

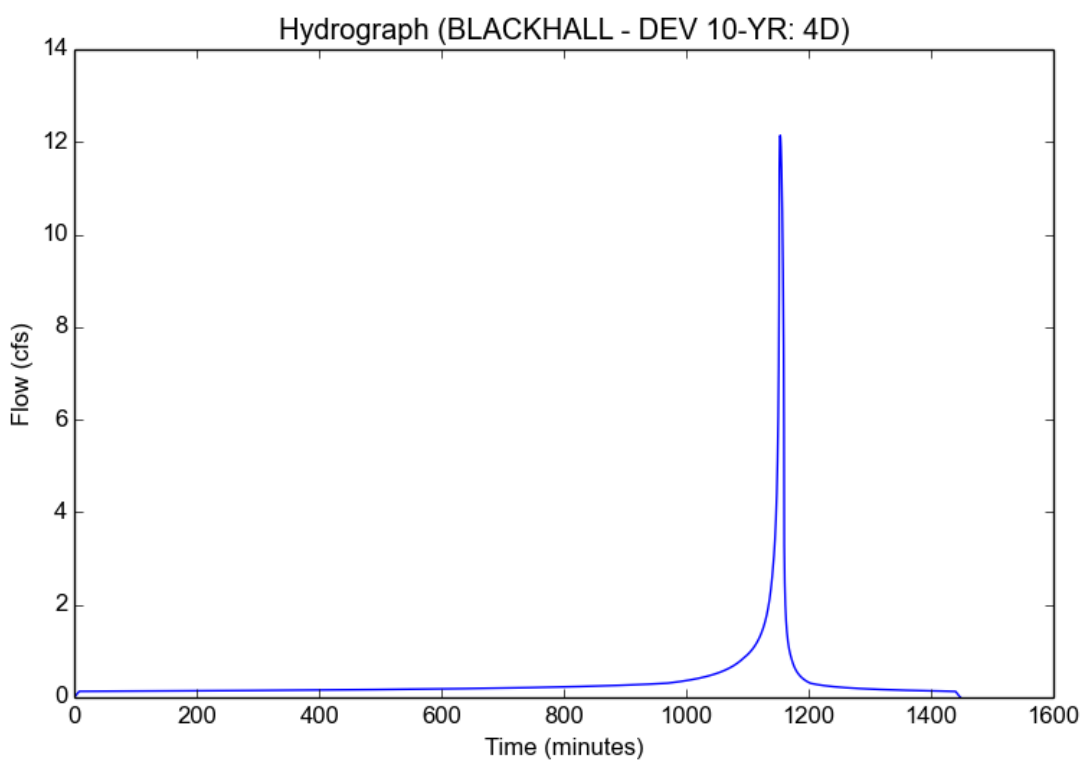

Peak Flow Hydrologic Analysis

File location: I:/Project Files/2026 - BLACKHALL STUDIOS/HYDROLOGY/ONSITE/HYDROCALC/DEV/BLACKHALL - DEV 10-YR Report_011022.pdf
Version: HydroCalc 1.0.3

Input Parameters

Project Name	BLACKHALL - DEV 10-YR
Subarea ID	5D
Area (ac)	1.6
Flow Path Length (ft)	675.0
Flow Path Slope (vft/hft)	0.207
50-yr Rainfall Depth (in)	8.1
Percent Impervious	0.05
Soil Type	20
Design Storm Frequency	10-yr
Fire Factor	0
LID	False

Output Results

Modeled (10-yr) Rainfall Depth (in)	5.7834
Peak Intensity (in/hr)	3.1672
Undeveloped Runoff Coefficient (Cu)	0.6158
Developed Runoff Coefficient (Cd)	0.63
Time of Concentration (min)	6.0
Clear Peak Flow Rate (cfs)	3.1927
Burned Peak Flow Rate (cfs)	3.1927
24-Hr Clear Runoff Volume (ac-ft)	0.1541
24-Hr Clear Runoff Volume (cu-ft)	6710.7033

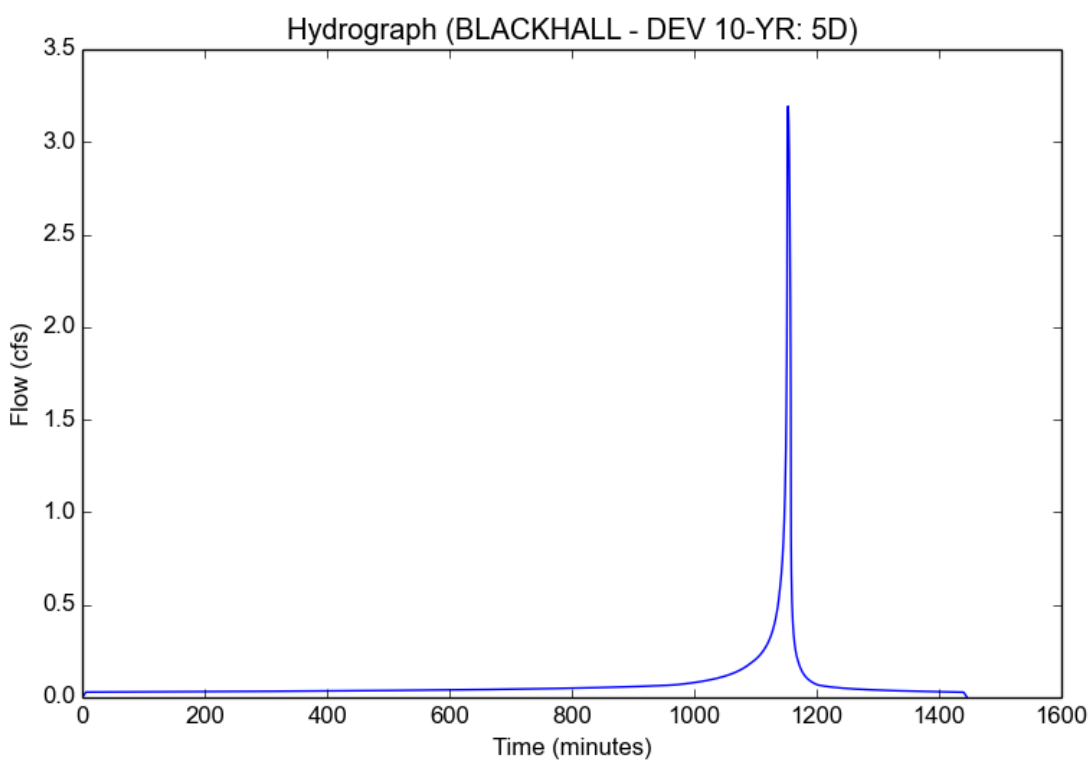

BLACKHALL STUDIOS

DEVELOPED CONDITION TC's

DESIGN STORM
(25-YR DEVELOPED, 50-YR UNDEVELOPED)

Peak Flow Hydrologic Analysis

File location: I:/Project Files/2026 - BLACKHALL STUDIOS/HYDROLOGY/ONSITE/HYDROCALC/DEV/BLACKHALL - DEV DESIGN Report_011022.pdf
Version: HydroCalc 1.0.3

Input Parameters

Project Name	BLACKHALL - DEV DESIGN
Subarea ID	1A
Area (ac)	15.3
Flow Path Length (ft)	1770.0
Flow Path Slope (vft/hft)	0.011
50-yr Rainfall Depth (in)	8.1
Percent Impervious	0.9
Soil Type	20
Design Storm Frequency	25-yr
Fire Factor	0
LID	False

Output Results

Modeled (25-yr) Rainfall Depth (in)	7.1118
Peak Intensity (in/hr)	2.6153
Undeveloped Runoff Coefficient (Cu)	0.5718
Developed Runoff Coefficient (Cd)	0.8672
Time of Concentration (min)	14.0
Clear Peak Flow Rate (cfs)	34.699
Burned Peak Flow Rate (cfs)	34.699
24-Hr Clear Runoff Volume (ac-ft)	7.4463
24-Hr Clear Runoff Volume (cu-ft)	324360.7445

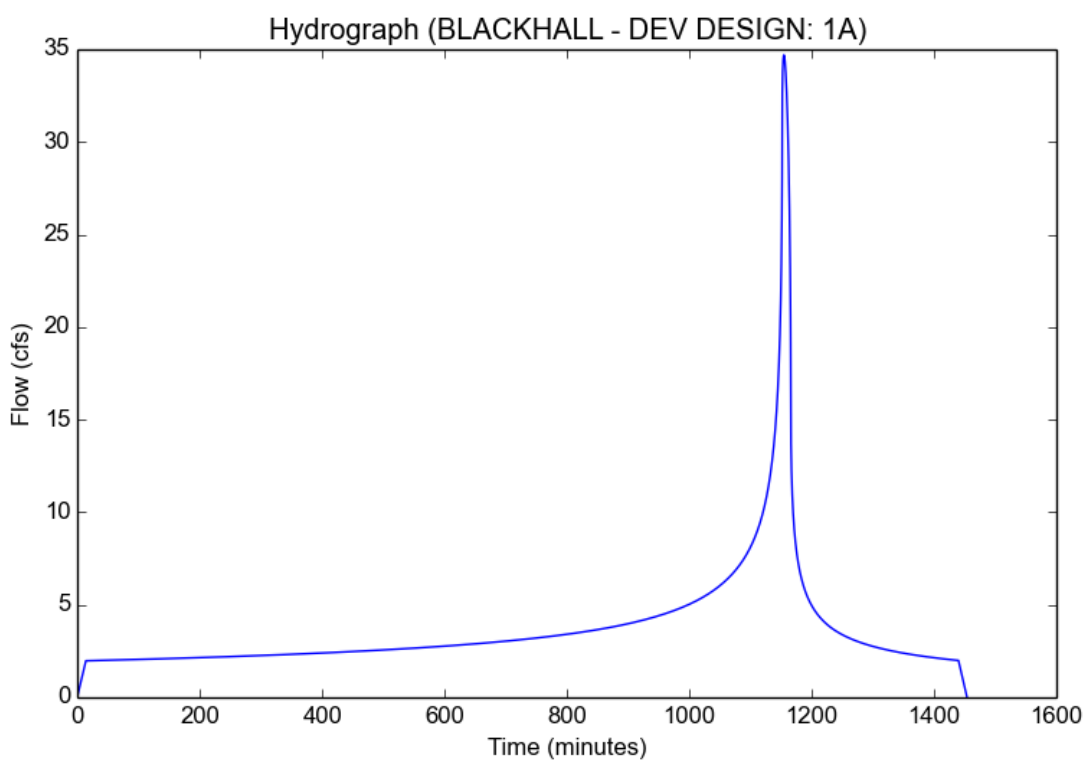

Peak Flow Hydrologic Analysis

File location: I:/Project Files/2026 - BLACKHALL STUDIOS/HYDROLOGY/ONSITE/HYDROCALC/DEV/BLACKHALL - DEV DESIGN Report_011022.pdf
Version: HydroCalc 1.0.3

Input Parameters

Project Name	BLACKHALL - DEV DESIGN
Subarea ID	2A
Area (ac)	37.7
Flow Path Length (ft)	2450.0
Flow Path Slope (vft/hft)	0.008
50-yr Rainfall Depth (in)	8.1
Percent Impervious	0.9
Soil Type	20
Design Storm Frequency	25-yr
Fire Factor	0
LID	False

Output Results

Modeled (25-yr) Rainfall Depth (in)	7.1118
Peak Intensity (in/hr)	2.3239
Undeveloped Runoff Coefficient (Cu)	0.5454
Developed Runoff Coefficient (Cd)	0.8645
Time of Concentration (min)	18.0
Clear Peak Flow Rate (cfs)	75.7438
Burned Peak Flow Rate (cfs)	75.7438
24-Hr Clear Runoff Volume (ac-ft)	18.3464
24-Hr Clear Runoff Volume (cu-ft)	799169.0188

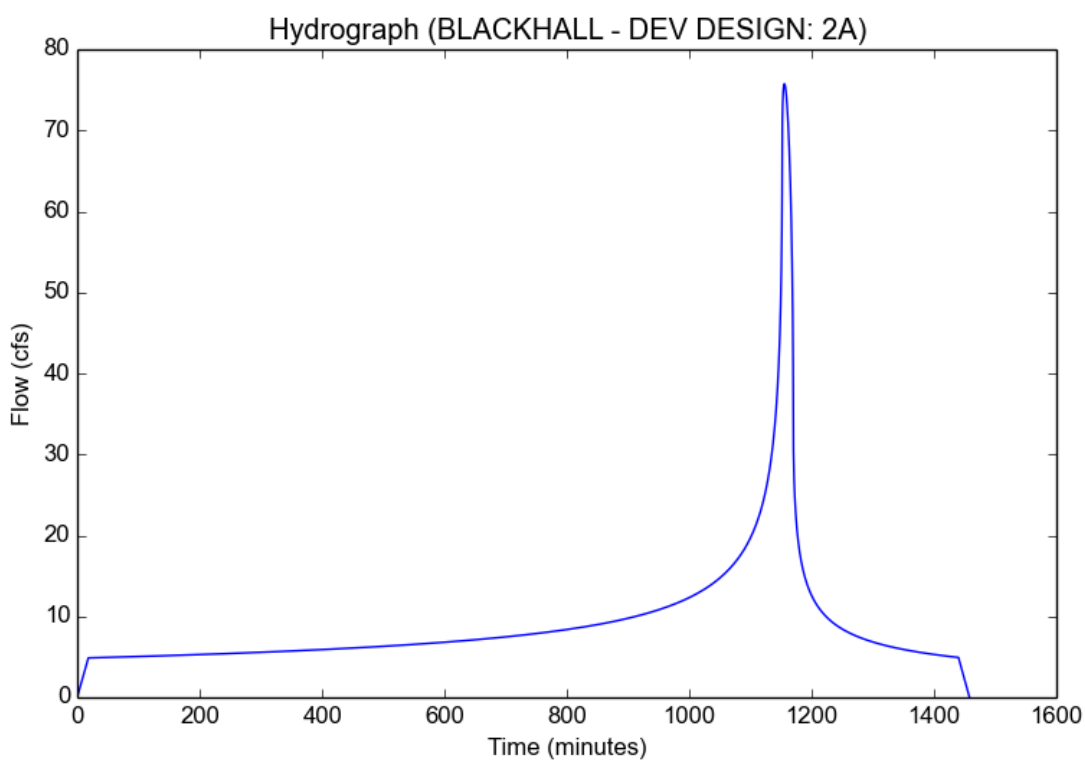

Peak Flow Hydrologic Analysis

File location: I:/Project Files/2026 - BLACKHALL STUDIOS/HYDROLOGY/ONSITE/HYDROCALC/DEV/BLACKHALL - DEV DESIGN Report_011022.pdf
Version: HydroCalc 1.0.3

Input Parameters

Project Name	BLACKHALL - DEV DESIGN
Subarea ID	1D
Area (ac)	13.2
Flow Path Length (ft)	2500.0
Flow Path Slope (vft/hft)	0.01
50-yr Rainfall Depth (in)	8.1
Percent Impervious	0.7
Soil Type	20
Design Storm Frequency	25-yr
Fire Factor	0
LID	False

Output Results

Modeled (25-yr) Rainfall Depth (in)	7.1118
Peak Intensity (in/hr)	2.2656
Undeveloped Runoff Coefficient (Cu)	0.5401
Developed Runoff Coefficient (Cd)	0.792
Time of Concentration (min)	19.0
Clear Peak Flow Rate (cfs)	23.6866
Burned Peak Flow Rate (cfs)	23.6866
24-Hr Clear Runoff Volume (ac-ft)	5.3056
24-Hr Clear Runoff Volume (cu-ft)	231111.4612

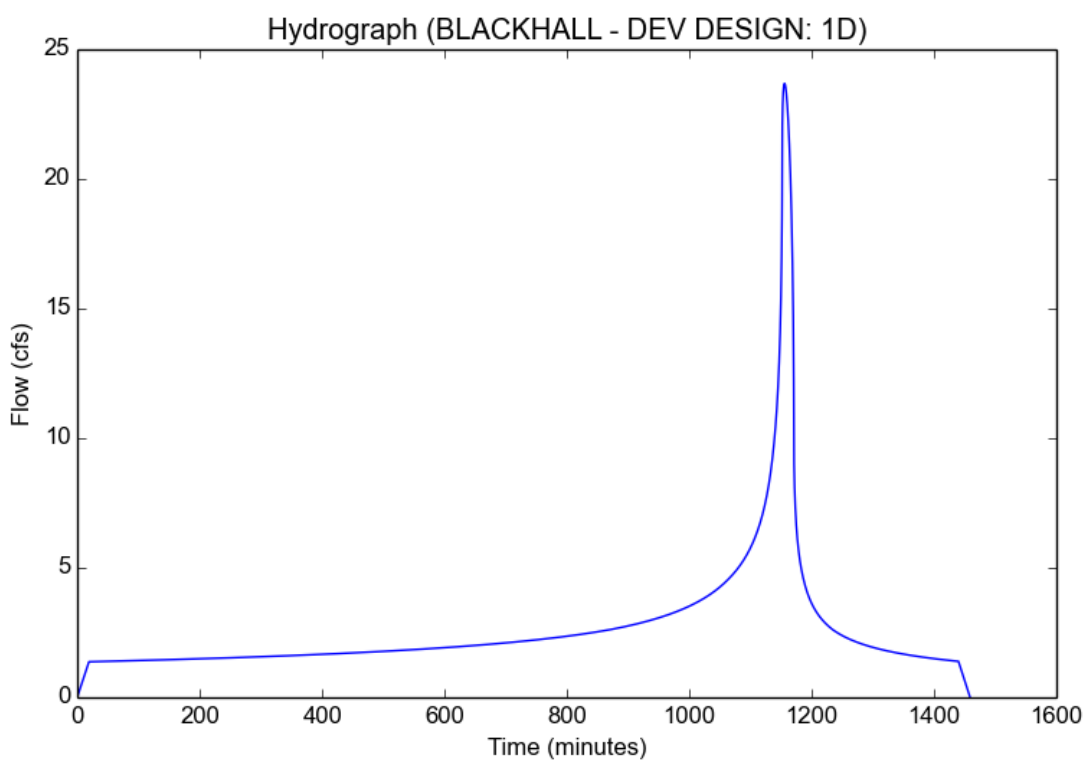

Peak Flow Hydrologic Analysis

File location: I:/Project Files/2026 - BLACKHALL STUDIOS/HYDROLOGY/ONSITE/HYDROCALC/DEV/BLACKHALL - DEV DESIGN Report_011022.pdf
Version: HydroCalc 1.0.3

Input Parameters

Project Name	BLACKHALL - DEV DESIGN
Subarea ID	2D
Area (ac)	1.7
Flow Path Length (ft)	555.0
Flow Path Slope (vft/hft)	0.014
50-yr Rainfall Depth (in)	8.1
Percent Impervious	0.6
Soil Type	20
Design Storm Frequency	25-yr
Fire Factor	0
LID	False

Output Results

Modeled (25-yr) Rainfall Depth (in)	7.1118
Peak Intensity (in/hr)	3.6225
Undeveloped Runoff Coefficient (Cu)	0.6411
Developed Runoff Coefficient (Cd)	0.7964
Time of Concentration (min)	7.0
Clear Peak Flow Rate (cfs)	4.9045
Burned Peak Flow Rate (cfs)	4.9045
24-Hr Clear Runoff Volume (ac-ft)	0.6124
24-Hr Clear Runoff Volume (cu-ft)	26674.1524

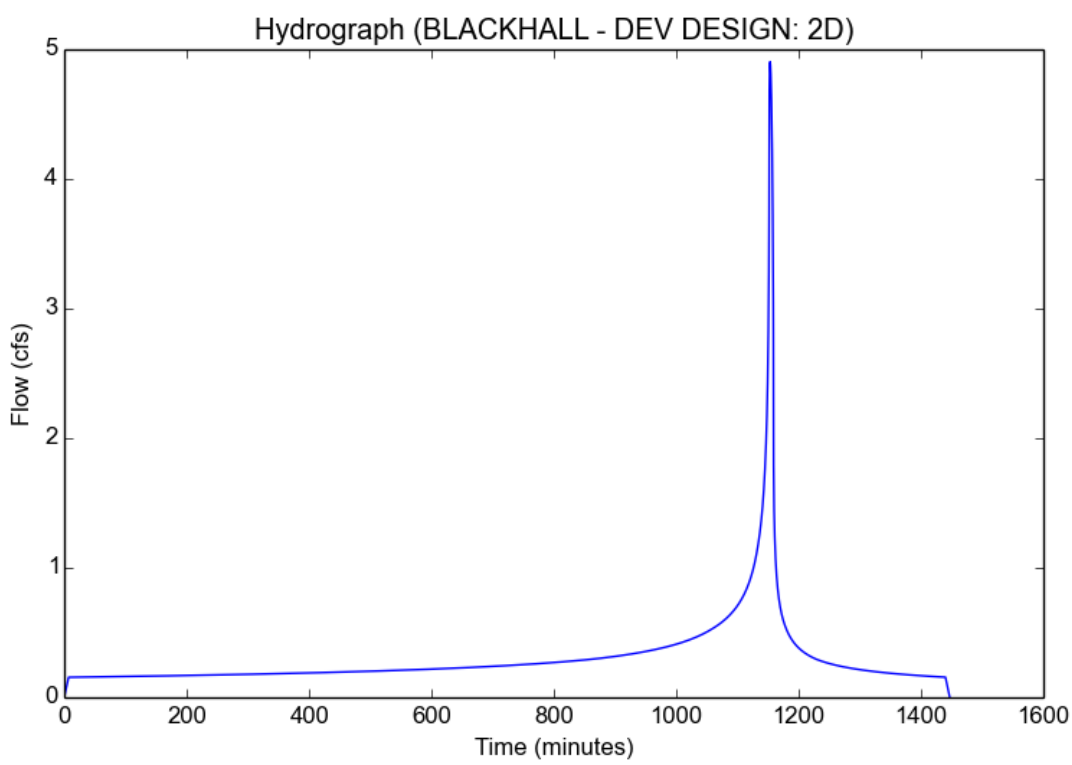

Peak Flow Hydrologic Analysis

File location: I:/Project Files/2026 - BLACKHALL STUDIOS/HYDROLOGY/ONSITE/HYDROCALC/DEV/BLACKHALL - DEV DESIGN Report_011022.pdf
Version: HydroCalc 1.0.3

Input Parameters

Project Name	BLACKHALL - DEV DESIGN
Subarea ID	3D
Area (ac)	12.1
Flow Path Length (ft)	870.0
Flow Path Slope (vft/hft)	0.011
50-yr Rainfall Depth (in)	8.1
Percent Impervious	0.8
Soil Type	20
Design Storm Frequency	25-yr
Fire Factor	0
LID	False

Output Results

Modeled (25-yr) Rainfall Depth (in)	7.1118
Peak Intensity (in/hr)	3.2189
Undeveloped Runoff Coefficient (Cu)	0.6187
Developed Runoff Coefficient (Cd)	0.8437
Time of Concentration (min)	9.0
Clear Peak Flow Rate (cfs)	32.8623
Burned Peak Flow Rate (cfs)	32.8623
24-Hr Clear Runoff Volume (ac-ft)	5.379
24-Hr Clear Runoff Volume (cu-ft)	234308.5083

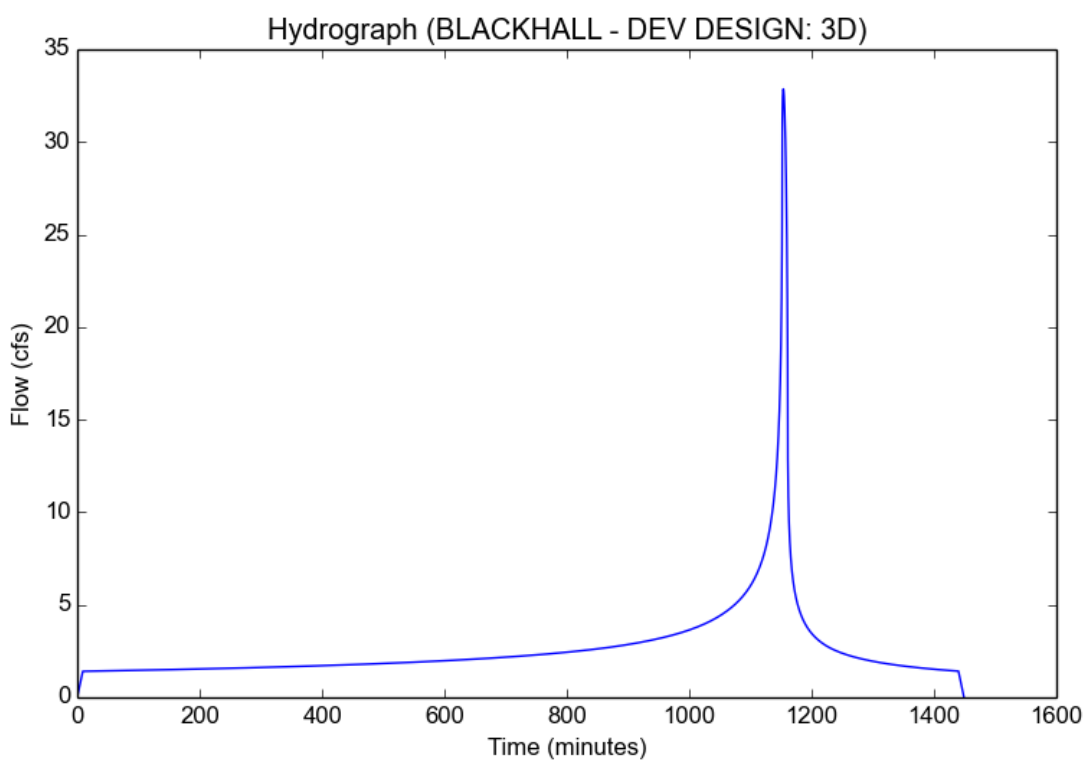

Peak Flow Hydrologic Analysis

File location: I:/Project Files/2026 - BLACKHALL STUDIOS/HYDROLOGY/ONSITE/HYDROCALC/DEV/BLACKHALL - DEV DESIGN Report_011022.pdf
Version: HydroCalc 1.0.3

Input Parameters

Project Name	BLACKHALL - DEV DESIGN
Subarea ID	4D
Area (ac)	7.3
Flow Path Length (ft)	1160.0
Flow Path Slope (vft/hft)	0.34
50-yr Rainfall Depth (in)	8.1
Percent Impervious	0.05
Soil Type	20
Design Storm Frequency	50-yr
Fire Factor	0
LID	False

Output Results

Modeled (50-yr) Rainfall Depth (in)	8.1
Peak Intensity (in/hr)	4.4358
Undeveloped Runoff Coefficient (Cu)	0.6759
Developed Runoff Coefficient (Cd)	0.6871
Time of Concentration (min)	6.0
Clear Peak Flow Rate (cfs)	22.2506
Burned Peak Flow Rate (cfs)	22.2506
24-Hr Clear Runoff Volume (ac-ft)	1.1288
24-Hr Clear Runoff Volume (cu-ft)	49170.0373

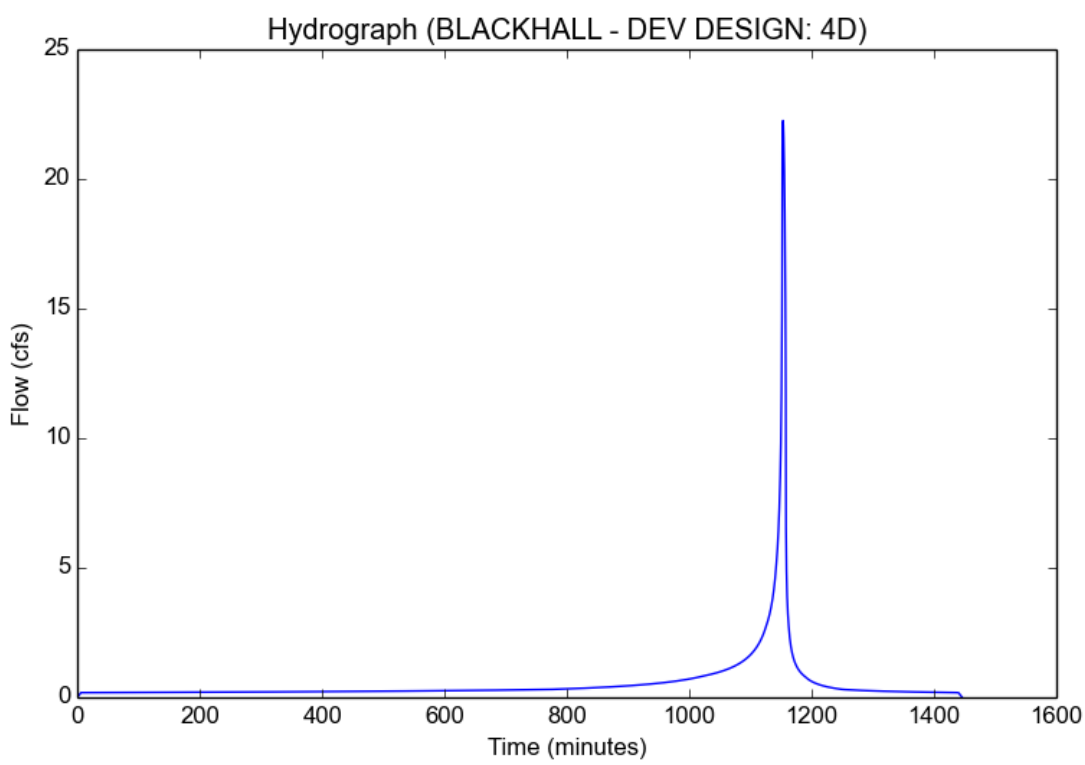

Peak Flow Hydrologic Analysis

File location: I:/Project Files/2026 - BLACKHALL STUDIOS/HYDROLOGY/ONSITE/HYDROCALC/DEV/BLACKHALL - DEV DESIGN Report_011022.pdf
Version: HydroCalc 1.0.3

Input Parameters

Project Name	BLACKHALL - DEV DESIGN
Subarea ID	5D
Area (ac)	1.6
Flow Path Length (ft)	675.0
Flow Path Slope (vft/hft)	0.207
50-yr Rainfall Depth (in)	8.1
Percent Impervious	0.05
Soil Type	20
Design Storm Frequency	50-yr
Fire Factor	0
LID	False

Output Results

Modeled (50-yr) Rainfall Depth (in)	8.1
Peak Intensity (in/hr)	4.8327
Undeveloped Runoff Coefficient (Cu)	0.6887
Developed Runoff Coefficient (Cd)	0.6992
Time of Concentration (min)	5.0
Clear Peak Flow Rate (cfs)	5.4066
Burned Peak Flow Rate (cfs)	5.4066
24-Hr Clear Runoff Volume (ac-ft)	0.2475
24-Hr Clear Runoff Volume (cu-ft)	10783.0333

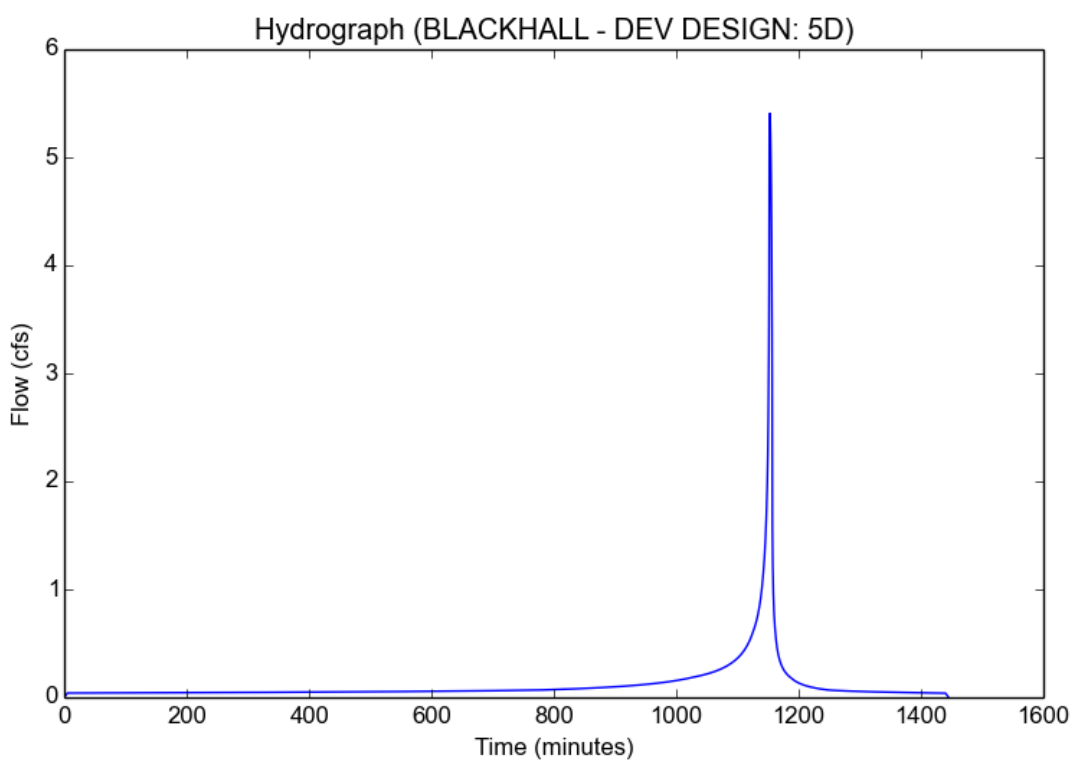

BLACKHALL STUDIOS

EXISTING CONDITION TC's

BASIN 'A', 'B', 'C', and 'X'

BLACKHALL STUDIOS

EXISTING CONDITION TC's

10-YR

Peak Flow Hydrologic Analysis

File location: I:/Project Files/2026 - BLACKHALL STUDIOS/HYDROLOGY/HYDROCALC/EX/10-YEAR/BLACKHALL - EX 10YR Report.pdf
Version: HydroCalc 1.0.3

Input Parameters

Project Name	BLACKHALL - EX 10YR
Subarea ID	1A
Area (ac)	20.7
Flow Path Length (ft)	1250.0
Flow Path Slope (vft/hft)	0.014
50-yr Rainfall Depth (in)	8.1
Percent Impervious	0.1
Soil Type	20
Design Storm Frequency	10-yr
Fire Factor	0
LID	False

Output Results

Modeled (10-yr) Rainfall Depth (in)	5.7834
Peak Intensity (in/hr)	1.9413
Undeveloped Runoff Coefficient (Cu)	0.5078
Developed Runoff Coefficient (Cd)	0.5471
Time of Concentration (min)	17.0
Clear Peak Flow Rate (cfs)	21.9834
Burned Peak Flow Rate (cfs)	21.9834
24-Hr Clear Runoff Volume (ac-ft)	2.3323
24-Hr Clear Runoff Volume (cu-ft)	101596.4651

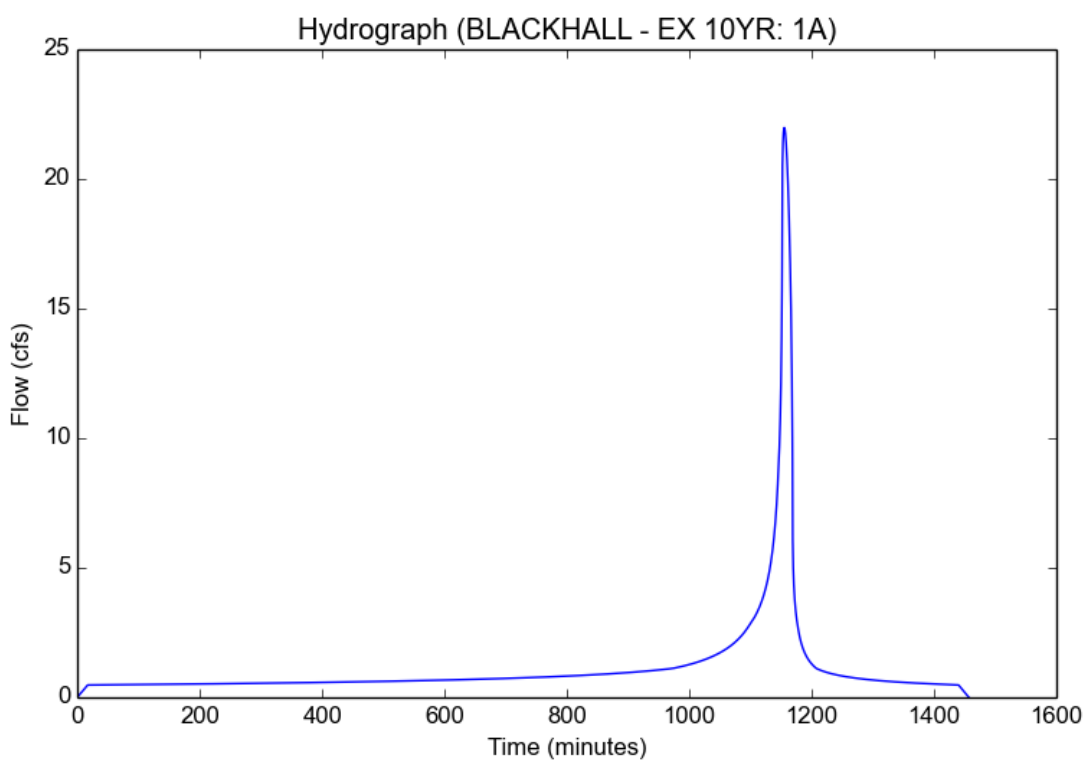

Peak Flow Hydrologic Analysis

File location: I:/Project Files/2026 - BLACKHALL STUDIOS/HYDROLOGY/HYDROCALC/EX/10-YEAR/BLACKHALL - EX 10YR Report.pdf
Version: HydroCalc 1.0.3

Input Parameters

Project Name	BLACKHALL - EX 10YR
Subarea ID	2A
Area (ac)	30.6
Flow Path Length (ft)	1630.0
Flow Path Slope (vft/hft)	0.014
50-yr Rainfall Depth (in)	8.1
Percent Impervious	0.08
Soil Type	20
Design Storm Frequency	10-yr
Fire Factor	0
LID	False

Output Results

Modeled (10-yr) Rainfall Depth (in)	5.7834
Peak Intensity (in/hr)	1.7985
Undeveloped Runoff Coefficient (Cu)	0.4878
Developed Runoff Coefficient (Cd)	0.5208
Time of Concentration (min)	20.0
Clear Peak Flow Rate (cfs)	28.66
Burned Peak Flow Rate (cfs)	28.66
24-Hr Clear Runoff Volume (ac-ft)	3.2219
24-Hr Clear Runoff Volume (cu-ft)	140347.5889

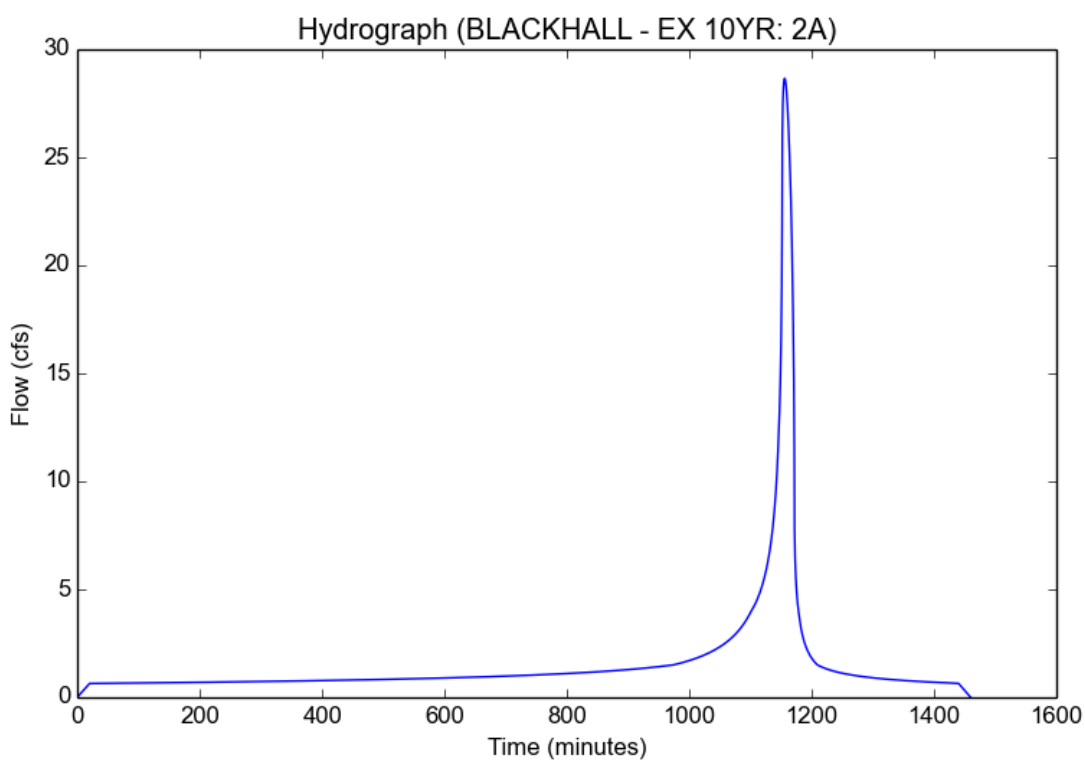

Peak Flow Hydrologic Analysis

File location: I:/Project Files/2026 - BLACKHALL STUDIOS/HYDROLOGY/HYDROCALC/EX/10-YEAR/BLACKHALL - EX 10YR Report.pdf
Version: HydroCalc 1.0.3

Input Parameters

Project Name	BLACKHALL - EX 10YR
Subarea ID	1B
Area (ac)	4.5
Flow Path Length (ft)	1305.0
Flow Path Slope (vft/hft)	0.011
50-yr Rainfall Depth (in)	8.1
Percent Impervious	0.05
Soil Type	20
Design Storm Frequency	10-yr
Fire Factor	0
LID	False

Output Results

Modeled (10-yr) Rainfall Depth (in)	5.7834
Peak Intensity (in/hr)	1.8424
Undeveloped Runoff Coefficient (Cu)	0.4939
Developed Runoff Coefficient (Cd)	0.5143
Time of Concentration (min)	19.0
Clear Peak Flow Rate (cfs)	4.2636
Burned Peak Flow Rate (cfs)	4.2636
24-Hr Clear Runoff Volume (ac-ft)	0.4266
24-Hr Clear Runoff Volume (cu-ft)	18583.5072

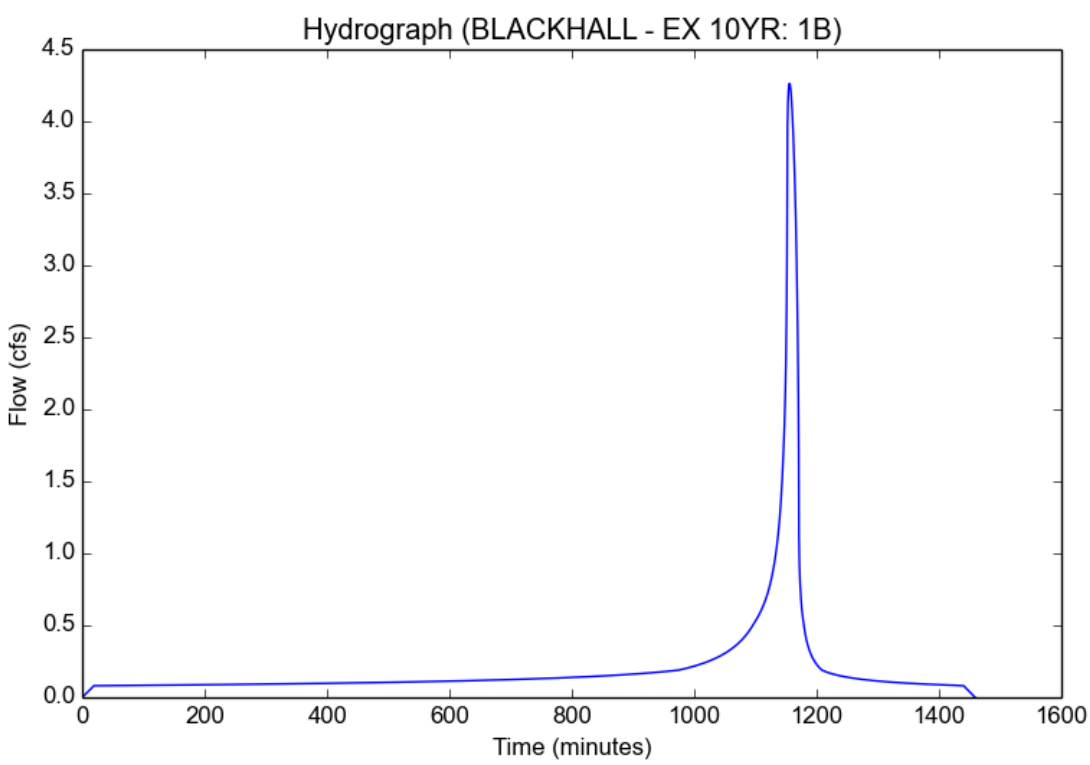

Peak Flow Hydrologic Analysis

File location: I:/Project Files/2026 - BLACKHALL STUDIOS/HYDROLOGY/HYDROCALC/EX/10-YEAR/BLACKHALL - EX 10YR Report.pdf
Version: HydroCalc 1.0.3

Input Parameters

Project Name	BLACKHALL - EX 10YR
Subarea ID	1C
Area (ac)	13.2
Flow Path Length (ft)	2395.0
Flow Path Slope (vft/hft)	0.013
50-yr Rainfall Depth (in)	8.1
Percent Impervious	0.08
Soil Type	20
Design Storm Frequency	10-yr
Fire Factor	0
LID	False

Output Results

Modeled (10-yr) Rainfall Depth (in)	5.7834
Peak Intensity (in/hr)	1.5355
Undeveloped Runoff Coefficient (Cu)	0.4508
Developed Runoff Coefficient (Cd)	0.4867
Time of Concentration (min)	28.0
Clear Peak Flow Rate (cfs)	9.8655
Burned Peak Flow Rate (cfs)	9.8655
24-Hr Clear Runoff Volume (ac-ft)	1.3804
24-Hr Clear Runoff Volume (cu-ft)	60129.9163

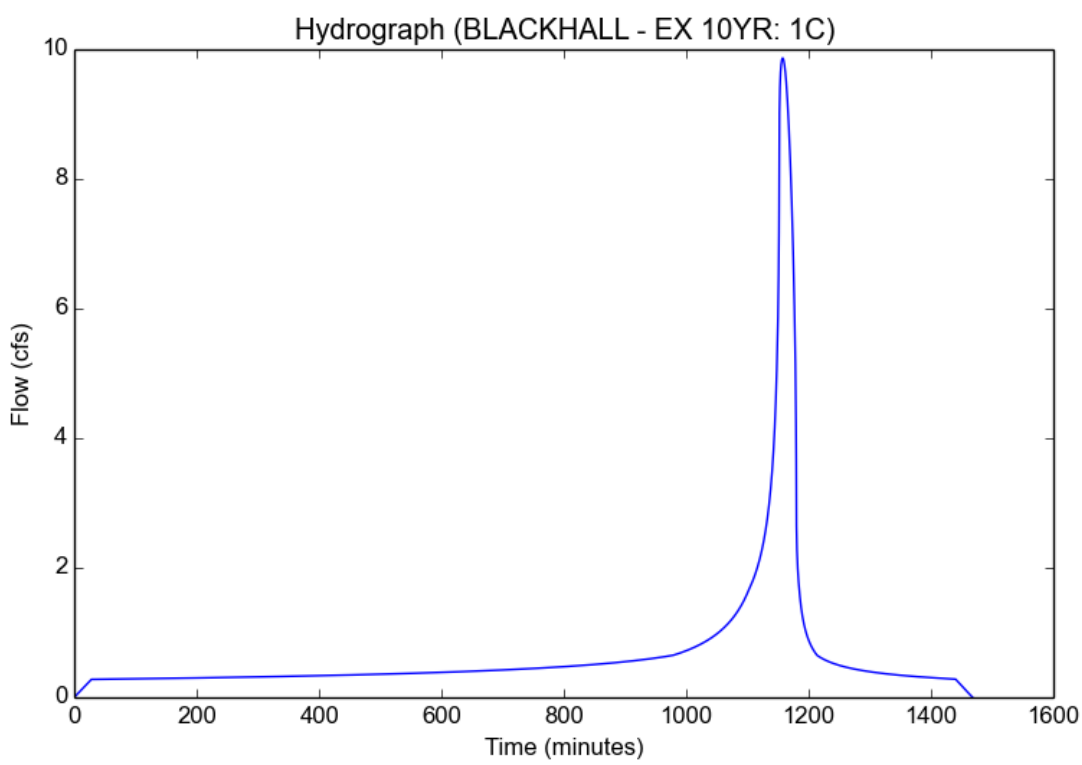

Peak Flow Hydrologic Analysis

File location: I:/Project Files/2026 - BLACKHALL STUDIOS/HYDROLOGY/HYDROCALC/EX/10-YEAR/BLACKHALL - EX 10YR Report.pdf
Version: HydroCalc 1.0.3

Input Parameters

Project Name	BLACKHALL - EX 10YR
Subarea ID	1X
Area (ac)	21.4
Flow Path Length (ft)	1725.0
Flow Path Slope (vft/hft)	0.067
50-yr Rainfall Depth (in)	8.1
Percent Impervious	0.05
Soil Type	20
Design Storm Frequency	10-yr
Fire Factor	0
LID	False

Output Results

Modeled (10-yr) Rainfall Depth (in)	5.7834
Peak Intensity (in/hr)	1.9974
Undeveloped Runoff Coefficient (Cu)	0.5157
Developed Runoff Coefficient (Cd)	0.5349
Time of Concentration (min)	16.0
Clear Peak Flow Rate (cfs)	22.8657
Burned Peak Flow Rate (cfs)	22.8657
24-Hr Clear Runoff Volume (ac-ft)	2.0364
24-Hr Clear Runoff Volume (cu-ft)	88707.5477

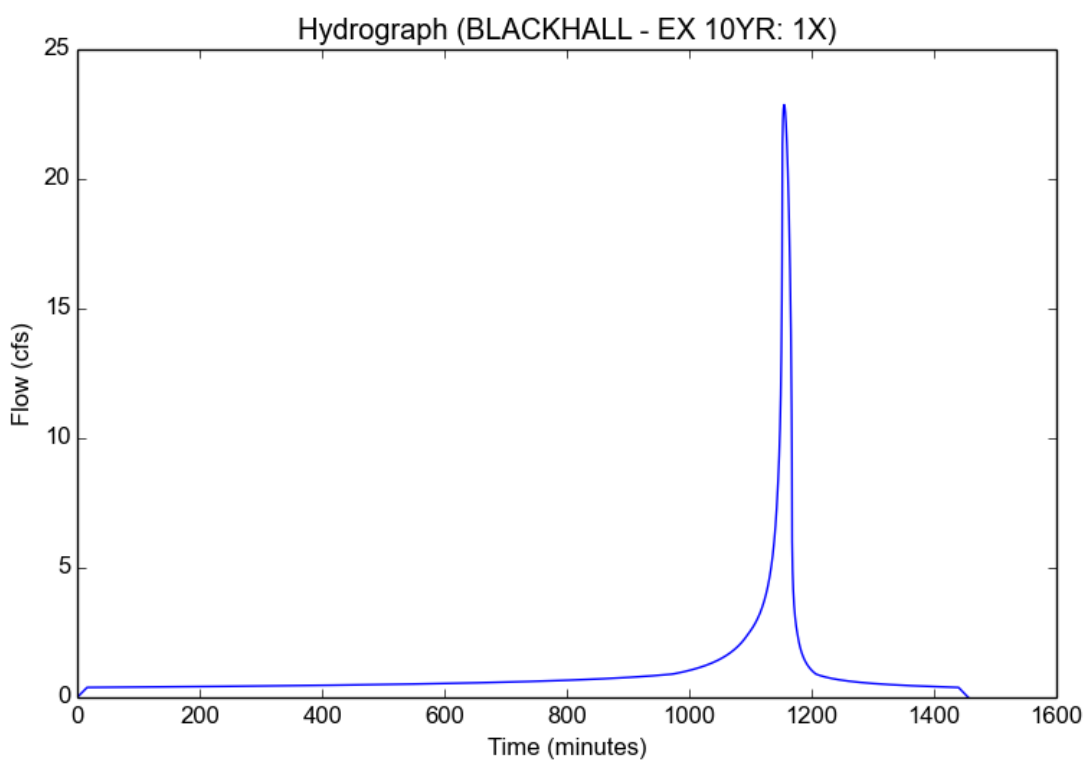

BLACKHALL STUDIOS

EXISTING CONDITION TC's

25-YR

Peak Flow Hydrologic Analysis

File location: I:/Project Files/2026 - BLACKHALL STUDIOS/HYDROLOGY/HYDROCALC/EX/25-YEAR/BLACKHALL - EX 25YR Report_041221.pdf
Version: HydroCalc 1.0.3

Input Parameters

Project Name	BLACKHALL - EX 25YR
Subarea ID	1A
Area (ac)	20.7
Flow Path Length (ft)	1250.0
Flow Path Slope (vft/hft)	0.014
50-yr Rainfall Depth (in)	8.1
Percent Impervious	0.1
Soil Type	20
Design Storm Frequency	25-yr
Fire Factor	0
LID	False

Output Results

Modeled (25-yr) Rainfall Depth (in)	7.1118
Peak Intensity (in/hr)	2.708
Undeveloped Runoff Coefficient (Cu)	0.5801
Developed Runoff Coefficient (Cd)	0.6121
Time of Concentration (min)	13.0
Clear Peak Flow Rate (cfs)	34.3131
Burned Peak Flow Rate (cfs)	34.3131
24-Hr Clear Runoff Volume (ac-ft)	3.0734
24-Hr Clear Runoff Volume (cu-ft)	133877.3461

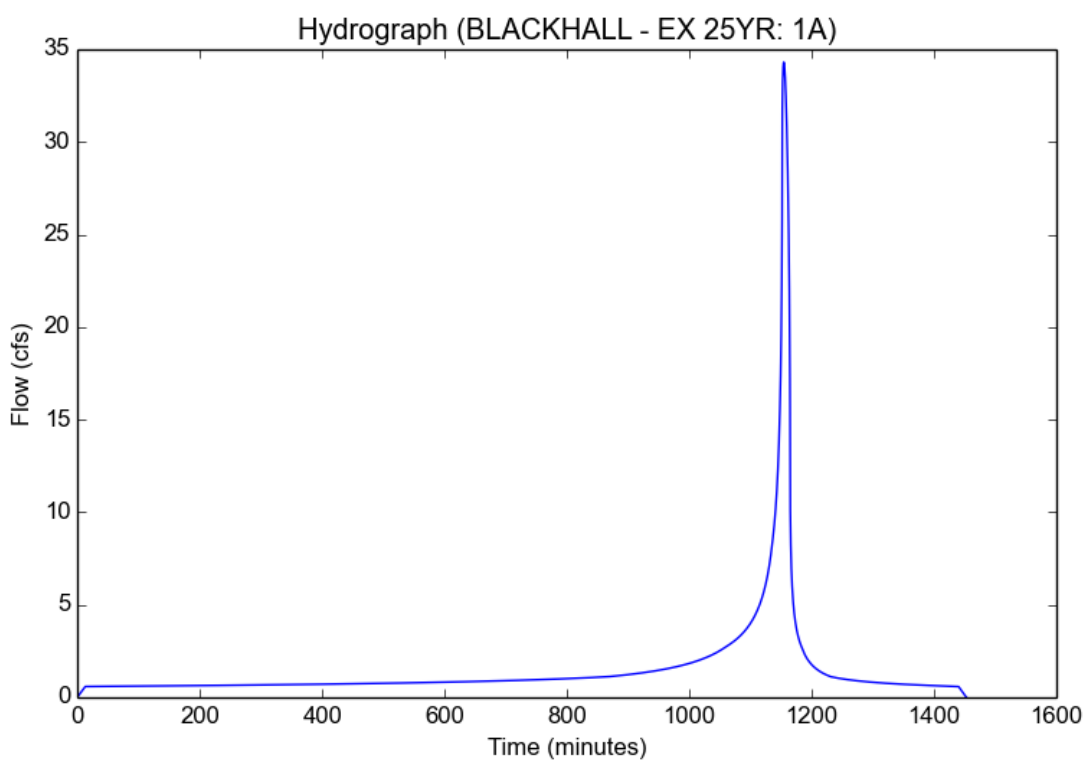

Peak Flow Hydrologic Analysis

File location: I:/Project Files/2026 - BLACKHALL STUDIOS/HYDROLOGY/HYDROCALC/EX/25-YEAR/BLACKHALL - EX 25YR Report_041221.pdf
Version: HydroCalc 1.0.3

Input Parameters

Project Name	BLACKHALL - EX 25YR
Subarea ID	2A
Area (ac)	30.6
Flow Path Length (ft)	1630.0
Flow Path Slope (vft/hft)	0.014
50-yr Rainfall Depth (in)	8.1
Percent Impervious	0.08
Soil Type	20
Design Storm Frequency	25-yr
Fire Factor	0
LID	False

Output Results

Modeled (25-yr) Rainfall Depth (in)	7.1118
Peak Intensity (in/hr)	2.4562
Undeveloped Runoff Coefficient (Cu)	0.5574
Developed Runoff Coefficient (Cd)	0.5848
Time of Concentration (min)	16.0
Clear Peak Flow Rate (cfs)	43.9515
Burned Peak Flow Rate (cfs)	43.9515
24-Hr Clear Runoff Volume (ac-ft)	4.2739
24-Hr Clear Runoff Volume (cu-ft)	186170.8152

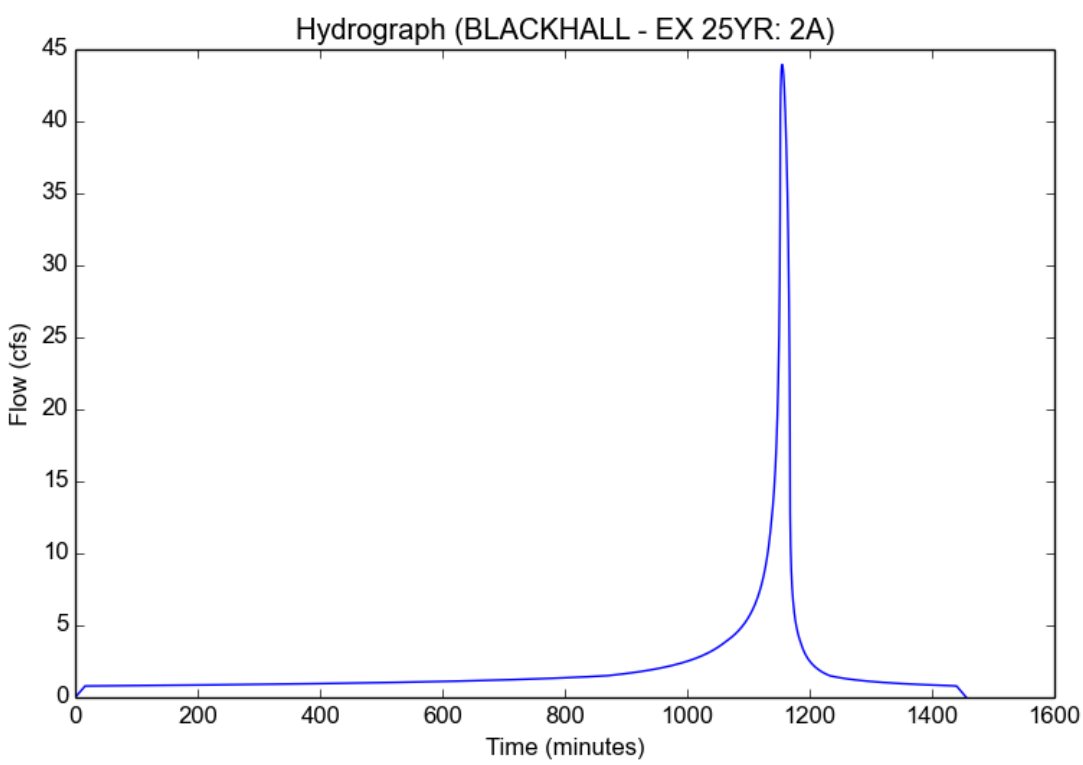

Peak Flow Hydrologic Analysis

File location: I:/Project Files/2026 - BLACKHALL STUDIOS/HYDROLOGY/HYDROCALC/EX/25-YEAR/BLACKHALL - EX 25YR Report_041221.pdf
Version: HydroCalc 1.0.3

Input Parameters

Project Name	BLACKHALL - EX 25YR
Subarea ID	1B
Area (ac)	4.5
Flow Path Length (ft)	1305.0
Flow Path Slope (vft/hft)	0.011
50-yr Rainfall Depth (in)	8.1
Percent Impervious	0.05
Soil Type	20
Design Storm Frequency	25-yr
Fire Factor	0
LID	False

Output Results

Modeled (25-yr) Rainfall Depth (in)	7.1118
Peak Intensity (in/hr)	2.5318
Undeveloped Runoff Coefficient (Cu)	0.5642
Developed Runoff Coefficient (Cd)	0.581
Time of Concentration (min)	15.0
Clear Peak Flow Rate (cfs)	6.6195
Burned Peak Flow Rate (cfs)	6.6195
24-Hr Clear Runoff Volume (ac-ft)	0.5719
24-Hr Clear Runoff Volume (cu-ft)	24911.2081

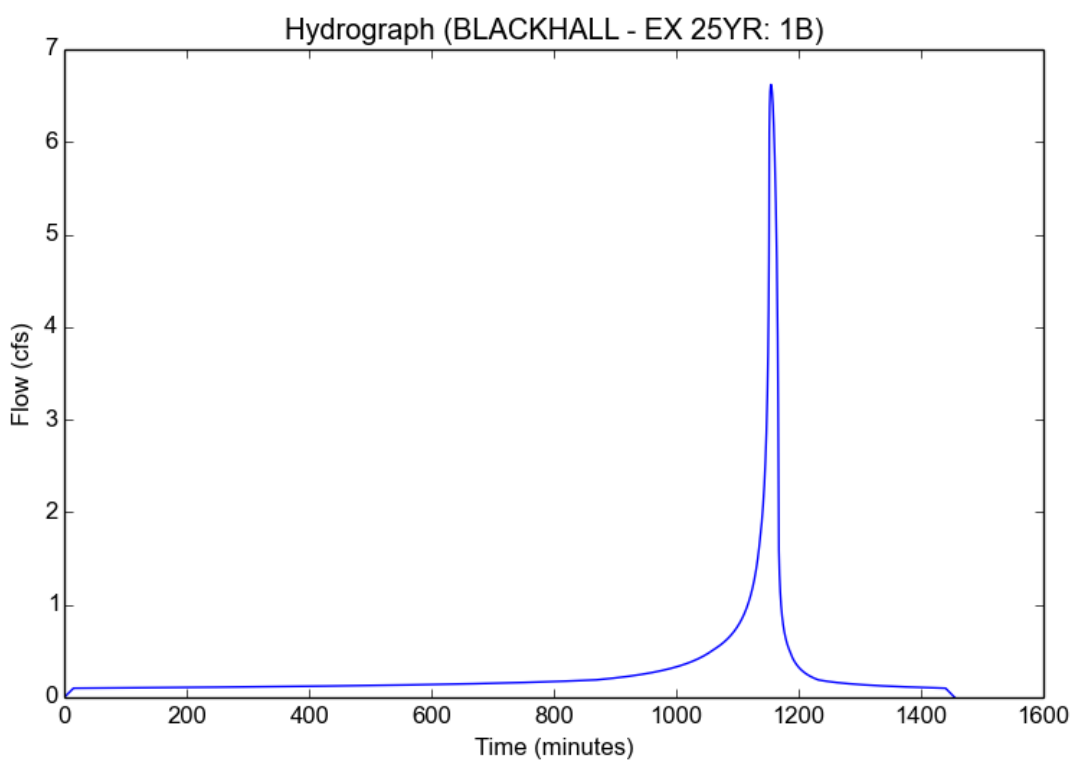

Peak Flow Hydrologic Analysis

File location: I:/Project Files/2026 - BLACKHALL STUDIOS/HYDROLOGY/HYDROCALC/EX/25-YEAR/BLACKHALL - EX 25YR Report_041221.pdf
Version: HydroCalc 1.0.3

Input Parameters

Project Name	BLACKHALL - EX 25YR
Subarea ID	1C
Area (ac)	13.2
Flow Path Length (ft)	2395.0
Flow Path Slope (vft/hft)	0.013
50-yr Rainfall Depth (in)	8.1
Percent Impervious	0.08
Soil Type	20
Design Storm Frequency	25-yr
Fire Factor	0
LID	False

Output Results

Modeled (25-yr) Rainfall Depth (in)	7.1118
Peak Intensity (in/hr)	2.1148
Undeveloped Runoff Coefficient (Cu)	0.5265
Developed Runoff Coefficient (Cd)	0.5564
Time of Concentration (min)	22.0
Clear Peak Flow Rate (cfs)	15.5305
Burned Peak Flow Rate (cfs)	15.5305
24-Hr Clear Runoff Volume (ac-ft)	1.8366
24-Hr Clear Runoff Volume (cu-ft)	80000.8701

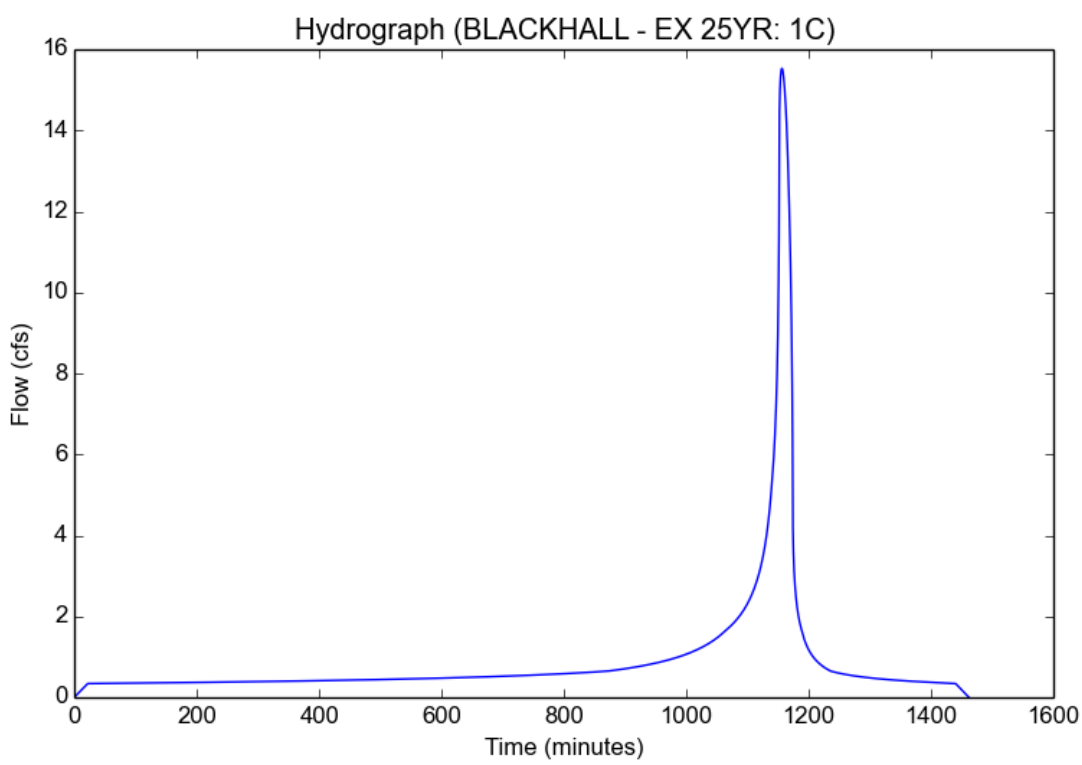

Peak Flow Hydrologic Analysis

File location: I:/Project Files/2026 - BLACKHALL STUDIOS/HYDROLOGY/HYDROCALC/EX/25-YEAR/BLACKHALL - EX 25YR Report_041221.pdf
Version: HydroCalc 1.0.3

Input Parameters

Project Name	BLACKHALL - EX 25YR
Subarea ID	1X
Area (ac)	21.4
Flow Path Length (ft)	1725.0
Flow Path Slope (vft/hft)	0.067
50-yr Rainfall Depth (in)	8.1
Percent Impervious	0.05
Soil Type	20
Design Storm Frequency	25-yr
Fire Factor	0
LID	False

Output Results

Modeled (25-yr) Rainfall Depth (in)	7.1118
Peak Intensity (in/hr)	2.708
Undeveloped Runoff Coefficient (Cu)	0.5801
Developed Runoff Coefficient (Cd)	0.5961
Time of Concentration (min)	13.0
Clear Peak Flow Rate (cfs)	34.5467
Burned Peak Flow Rate (cfs)	34.5467
24-Hr Clear Runoff Volume (ac-ft)	2.725
24-Hr Clear Runoff Volume (cu-ft)	118699.0318

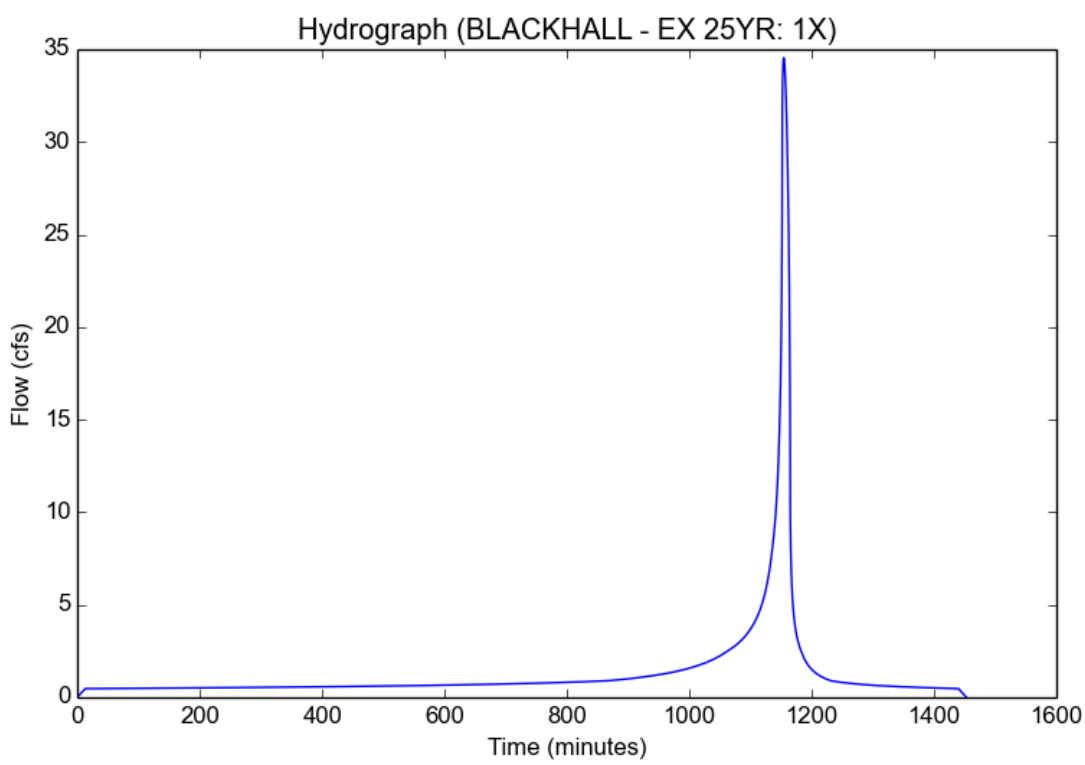

APPENDIX B

HYDROLOGIC MODELING OUTPUT

(LAR04 SOFTWARE)

BLACKHALL STUDIOS

10-YEAR CLEAR

DEVELOPED CONDITION

```
006  2026    1A  20 9015.316A414 2095000800                 0  G1
006  2026    2A  20 9037.721A414 55.0000900                 02  2
```

Version 11.3, MODIFIED RATIONAL METHOD HYDROLOGY - STORM YEAR = 10 SOIL DATA FILE: C:\civild\scr_soilx_34.dat
BLACKHALL-DEV A MODEL 10-YEAR CLEAR STORM DAY 4

LOCATION		SUBAREA AREA(Ac)	SUBAREA Q(CFS)	TOTAL AREA(Ac)	TOTAL Q(CFS)	CONV TYPE	CONV LNGTH(Ft)	CONV SLOPE	CONV SIZE(Ft)	CONV Z	CONTROL Q(CFS)	SOIL NAME	TC	RAIN ZONE	PCT IMPV
2026	1A	15.3	26.62	15.3	26.62	4	2095.	.00800	2.25	.00	0.	20	16	A41	.90
2026	2A	37.7	57.54	53.0	80.06	4	55.	.00900	3.25	.00	0.	20	21	A41	.90

Version 11.3, MODIFIED RATIONAL METHOD HYDROLOGY - STORM YEAR = 10 SOIL DATA FILE:
BLACKHALL-DEV A MODEL 10-YEAR CLEAR
HYDROGRAPH AT 2026 2A STORM DAY 4 REDUCTION FACTOR = 1.000

TIME	Q	TIME	Q	TIME	Q	TIME	Q	TIME	Q
0	.00	100	5.73	200	6.00	300	6.29	400	6.65
500	7.08	600	7.61	700	8.30	800	9.20	900	10.53
1000	12.75	1050	15.78	1100	20.26	1110	22.49	1120	26.22
1130	30.35	1131	30.83	1132	31.28	1133	31.79	1134	32.30
1135	32.87	1136	33.39	1137	34.12	1138	34.86	1139	35.62
1140	36.39	1141	37.43	1142	38.38	1143	39.26	1144	40.14
1145	41.57	1146	43.05	1147	44.64	1148	46.18	1149	50.81
1150	55.57	1151	60.31	1152	65.16	1153	70.21	1154	72.40
1155	74.27	1156	75.95	1157	77.56	1158	78.76	1159	79.54
1160	79.92	1161	80.06	1162	79.61	1163	78.92	1164	78.01
1165	76.99	1166	75.13	1167	73.20	1168	70.90	1169	68.41
1170	62.44	1171	56.13	1172	49.71	1173	43.13	1174	36.70
1175	33.52	1176	31.04	1177	29.08	1178	27.44	1179	26.05
1180	24.84	1181	23.86	1182	22.96	1183	22.11	1184	21.38
1185	20.76	1186	20.17	1187	19.68	1188	19.14	1189	18.76
1190	18.33	1191	17.91	1192	17.58	1193	17.25	1194	16.93
1195	16.62	1196	16.32	1197	16.09	1198	15.80	1199	15.58
1200	15.30	1201	15.09	1202	14.88	1203	14.68	1204	14.54
1205	14.35	1206	14.15	1207	13.96	1208	13.84	1209	13.66
1210	13.48	1211	13.36	1212	13.25	1213	13.08	1214	12.98
1215	12.87	1216	12.70	1217	12.60	1218	12.49	1219	12.40
1220	12.30	1221	12.20	1222	12.11	1223	12.02	1224	11.92
1225	11.77	1226	11.67	1227	11.64	1228	11.49	1229	11.40
1230	11.37	1231	11.28	1232	11.19	1233	11.10	1234	11.07
1235	10.93	1236	10.90	1237	10.81	1238	10.73	1239	10.71
1240	10.62	1241	10.54	1242	10.46	1243	10.44	1244	10.35
1245	10.27	1246	10.25	1247	10.17	1248	10.08	1249	10.07
1250	9.99	1251	9.91	1252	9.89	1253	9.81	1254	9.80
1255	9.72	1256	9.70	1257	9.62	1258	9.60	1259	9.52
1260	9.45	1261	9.43	1262	9.42	1263	9.34	1264	9.27
1265	9.25	1266	9.23	1267	9.16	1268	9.15	1269	9.07
1270	9.06	1271	9.05	1272	8.97	1273	8.96	1274	8.89
1275	8.87	1276	8.80	1277	8.79	1278	8.71	1279	8.70
1280	8.69	1281	8.61	1282	8.60	1283	8.53	1284	8.58
1285	8.51	1286	8.44	1287	8.43	1288	8.41	1289	8.34
1290	8.33	1291	8.32	1292	8.25	1293	8.24	1294	8.17
1295	8.22	1296	8.15	1297	8.14	1298	8.07	1299	8.06
1300	7.98	1310	7.77	1320	7.51	1330	7.33	1340	7.14
1350	6.96	1360	6.77	1370	6.59	1380	6.46	1390	6.30
1400	6.19	1420	5.99	1440	5.74	1460	1.85	1500	1.66

TOTAL VOLUME THIS HYDROGRAPH = 20.45(Ac.Ft)

```
006  2026    1A  20 7013.222A414680.0000900                 0  G1
006  2026    2A  20 60 1.7 8A414 1005000800                 0
006  2026    3A  20 8012.110A414200.0000800                 0
006  2026    4A  20  5 7.3 8A414190.0000500                 0
006  2026    5A  20  5 1.6 6A414  1.0001000                 02  2
```

Version 11.3, MODIFIED RATIONAL METHOD HYDROLOGY - STORM YEAR = 10 SOIL DATA FILE: C:\civild\scr_soilx_34.dat
BLACKHALL-DEV D MODEL 10-YR CLEAR STORM DAY 4

LOCATION		SUBAREA AREA(Ac)	SUBAREA Q(CFS)	TOTAL AREA(Ac)	TOTAL Q(CFS)	CONV TYPE	CONV LNGTH(Ft)	CONV SLOPE	CONV SIZE(Ft)	CONV Z	CONTROL Q(CFS)	SOIL NAME	TC	RAIN ZONE	PCT IMPV
2026	1A	13.2	17.80	13.2	17.80	4	680.	.00900	2.00	.00	0.	20	22	A41	.70
2026	2A	1.7	3.66	14.9	20.59	4	1005.	.00800	2.00	.00	0.	20	8	A41	.60
2026	3A	12.1	25.48	27.0	41.66	4	200.	.00800	2.75	.00	0.	20	10	A41	.80
2026	4A	7.3	12.27	34.3	51.99	4	190.	.00500	3.25	.00	0.	20	8	A41	.05
2026	5A	1.6	3.21	35.9	53.79	4	1.	.01000	2.75	.00	0.	20	6	A41	.05

Version 11.3, MODIFIED RATIONAL METHOD HYDROLOGY - STORM YEAR = 10 SOIL DATA FILE:
BLACKHALL-DEV D MODEL 10-YR CLEAR
HYDROGRAPH AT 2026 5A STORM DAY 4 REDUCTION FACTOR = 1.000

TIME	Q	TIME	Q	TIME	Q	TIME	Q	TIME	Q
0	.00	100	2.63	200	2.74	300	2.87	400	3.04
500	3.24	600	3.47	700	3.79	800	4.20	900	4.80
1000	5.80	1050	7.32	1100	9.67	1110	11.41	1120	13.32
1130	15.66	1131	15.98	1132	16.24	1133	16.51	1134	16.81
1135	17.15	1136	17.51	1137	17.93	1138	18.40	1139	18.92
1140	19.45	1141	20.03	1142	20.75	1143	21.51	1144	22.24
1145	23.13	1146	24.24	1147	25.49	1148	26.74	1149	29.13
1150	33.08	1151	37.90	1152	42.94	1153	47.97	1154	51.73
1155	53.36	1156	53.79	1157	53.14	1158	51.45	1159	49.04
1160	45.87	1161	41.76	1162	37.80	1163	34.38	1164	31.35
1165	29.18	1166	27.84	1167	26.85	1168	26.00	1169	25.22
1170	24.50	1171	23.81	1172	23.15	1173	22.47	1174	21.77
1175	21.03	1176	20.18	1177	19.17	1178	18.02	1179	16.80
1180	15.57	1181	14.38	1182	13.31	1183	12.39	1184	11.61
1185	10.97	1186	10.45	1187	10.01	1188	9.64	1189	9.33
1190	9.04	1191	8.78	1192	8.54	1193	8.33	1194	8.15
1195	7.99	1196	7.83	1197	7.67	1198	7.51	1199	7.37
1200	7.24	1201	7.12	1202	7.00	1203	6.90	1204	6.80
1205	6.71	1206	6.62	1207	6.54	1208	6.46	1209	6.40
1210	6.33	1211	6.25	1212	6.18	1213	6.11	1214	6.04
1215	5.98	1216	5.91	1217	5.85	1218	5.79	1219	5.73
1220	5.67	1221	5.63	1222	5.58	1223	5.54	1224	5.50
1225	5.46	1226	5.40	1227	5.36	1228	5.32	1229	5.28
1230	5.24	1231	5.21	1232	5.17	1233	5.13	1234	5.09
1235	5.05	1236	5.02	1237	5.00	1238	4.96	1239	4.93
1240	4.90	1241	4.87	1242	4.83	1243	4.80	1244	4.77
1245	4.75	1246	4.72	1247	4.69	1248	4.65	1249	4.62
1250	4.60	1251	4.57	1252	4.54	1253	4.52	1254	4.50
1255	4.47	1256	4.45	1257	4.43	1258	4.42	1259	4.40
1260	4.38	1261	4.35	1262	4.33	1263	4.31	1264	4.29
1265	4.26	1266	4.24	1267	4.22	1268	4.20	1269	4.18
1270	4.15	1271	4.14	1272	4.13	1273	4.11	1274	4.09
1275	4.08	1276	4.06	1277	4.03	1278	4.02	1279	4.00
1280	3.99	1281	3.98	1282	3.96	1283	3.93	1284	3.92
1285	3.91	1286	3.90	1287	3.88	1288	3.86	1289	3.85
1290	3.83	1291	3.81	1292	3.80	1293	3.79	1294	3.78
1295	3.76	1296	3.74	1297	3.74	1298	3.73	1299	3.71
1300	3.69	1310	3.58	1320	3.45	1330	3.37	1340	3.27
1350	3.19	1360	3.11	1370	3.02	1380	2.98	1390	2.88
1400	2.85	1420	2.76	1440	2.65	1460	2.60	1500	2.60

TOTAL VOLUME THIS HYDROGRAPH = 9.89(Ac.Ft)

BLACKHALL STUDIOS

DESIGN EVENT

DEVELOPED CONDITION

HYBRID OF
Q50 BURNED for NATURAL SUBAREA
&
Q25 CLEAR for URBAN SUBAREA

```
006  2026    1A  20 9015.314A414 2095000800                 0  G1
006  2026    2A  20 9037.718A414 55.0000900                 02  2
```

Version 11.3, MODIFIED RATIONAL METHOD HYDROLOGY - STORM YEAR = 25 SOIL DATA FILE: C:\civild\scr_soilx_34.dat
BLACKHALL-DEV A MODEL 25-YEAR CLEAR STORM DAY 4

LOCATION		SUBAREA AREA(Ac)	SUBAREA Q(CFS)	TOTAL AREA(Ac)	TOTAL Q(CFS)	CONV TYPE	CONV LNGTH(Ft)	CONV SLOPE	CONV SIZE(Ft)	CONV Z	CONTROL Q(CFS)	SOIL NAME	TC	RAIN ZONE	PCT IMPV
2026	1A	15.3	35.09	15.3	35.09	4	2095.	.00800	2.50	.00	0.	20	14	A41	.90
2026	2A	37.7	76.60	53.0	105.50	4	55.	.00900	3.75	.00	0.	20	18	A41	.90

LOS ANGELES COUNTY FLOOD CONTROL DISTRICT

PROG F0601M

Version 11.3, MODIFIED RATIONAL METHOD HYDROLOGY - STORM YEAR = 25 SOIL DATA FILE:
BLACKHALL-DEV A MODEL 25-YEAR CLEAR
HYDROGRAPH AT 2026 2A STORM DAY 4 REDUCTION FACTOR = 1.000

TIME	Q	TIME	Q	TIME	Q	TIME	Q	TIME	Q
0	.00	100	7.05	200	7.38	300	7.73	400	8.18
500	8.71	600	9.36	700	10.21	800	11.32	900	12.95
1000	15.76	1050	19.50	1100	25.07	1110	28.28	1120	33.04
1130	38.20	1131	38.71	1132	39.33	1133	40.03	1134	40.74
1135	41.55	1136	42.28	1137	43.32	1138	44.39	1139	45.21
1140	46.03	1141	47.25	1142	48.59	1143	49.84	1144	51.12
1145	53.21	1146	55.35	1147	57.62	1148	59.85	1149	66.40
1150	73.06	1151	79.58	1152	86.40	1153	93.58	1154	96.81
1155	99.26	1156	101.47	1157	103.41	1158	104.98	1159	105.50
1160	105.30	1161	104.85	1162	103.99	1163	102.05	1164	99.62
1165	96.96	1166	93.87	1167	85.95	1168	77.17	1169	68.27
1170	58.95	1171	49.60	1172	44.89	1173	41.24	1174	38.41
1175	36.04	1176	33.90	1177	32.22	1178	30.80	1179	29.59
1180	28.47	1181	27.41	1182	26.61	1183	25.67	1184	25.05
1185	24.29	1186	23.84	1187	23.23	1188	22.74	1189	22.27
1190	21.81	1191	21.37	1192	20.95	1193	20.62	1194	20.30
1195	19.99	1196	19.68	1197	19.29	1198	19.00	1199	18.71
1200	18.43	1201	18.25	1202	17.97	1203	17.80	1204	17.54
1205	17.37	1206	17.10	1207	16.94	1208	16.78	1209	16.63
1210	16.39	1211	16.24	1212	16.09	1213	15.85	1214	15.80
1215	15.66	1216	15.51	1217	15.38	1218	15.24	1219	15.11
1220	14.98	1221	14.85	1222	14.71	1223	14.58	1224	14.54
1225	14.31	1226	14.18	1227	14.14	1228	14.02	1229	13.89
1230	13.86	1231	13.73	1232	13.61	1233	13.49	1234	13.45
1235	13.33	1236	13.30	1237	13.18	1238	13.06	1239	13.04
1240	12.92	1241	12.80	1242	12.69	1243	12.75	1244	12.64
1245	12.53	1246	12.50	1247	12.39	1248	12.28	1249	12.26
1250	12.15	1251	12.13	1252	12.02	1253	12.00	1254	11.89
1255	11.86	1256	11.84	1257	11.73	1258	11.71	1259	11.60
1260	11.58	1261	11.48	1262	11.46	1263	11.36	1264	11.34
1265	11.32	1266	11.30	1267	11.20	1268	11.19	1269	11.08
1270	11.06	1271	11.05	1272	10.95	1273	10.93	1274	10.83
1275	10.81	1276	10.70	1277	10.78	1278	10.67	1279	10.66
1280	10.56	1281	10.54	1282	10.53	1283	10.43	1284	10.42
1285	10.40	1286	10.30	1287	10.37	1288	10.27	1289	10.17
1290	10.16	1291	10.15	1292	10.14	1293	10.03	1294	10.02
1295	10.01	1296	10.00	1297	9.90	1298	9.89	1299	9.87
1300	9.77	1310	9.50	1320	9.20	1330	8.98	1340	8.74
1350	8.53	1360	8.28	1370	8.07	1380	7.93	1390	7.72
1400	7.59	1420	7.36	1440	7.04	1460	2.04	1500	2.04

TOTAL VOLUME THIS HYDROGRAPH = 25.16(Ac.Ft)

```
006  2026    1A  20 7013.219A364680.0000900                 0  G1
006  2026    2A  20 60 1.7 7A364 1005000800                 0
006  2026    3A  20 8012.1 9A364200.0000800                 0
006  2026    4A 220  5 7.3 6A414190.0000500                 0
006  2026    5A 220  5 1.6 5A414  1.0001000                 02  2
```

Version 11.3, MODIFIED RATIONAL METHOD HYDROLOGY - STORM YEAR = 50 SOIL DATA FILE: C:\civild\scr_soilx_34.dat
BLACKHALL-DEV D MODEL DESIGN EVENT STORM DAY 4

LOCATION		SUBAREA AREA(Ac)	SUBAREA Q(CFS)	TOTAL AREA(Ac)	TOTAL Q(CFS)	CONV TYPE	CONV LNGTH(Ft)	CONV SLOPE	CONV SIZE(Ft)	CONV Z	CONTROL Q(CFS)	SOIL NAME	TC	RAIN ZONE	PCT IMPV
2026	1A	13.2	24.03	13.2	24.03	4	680.	.00900	2.25	.00	0.	20	19	A36	.70
2026	2A	1.7	4.91	14.9	27.51	4	1005.	.00800	2.25	.00	0.	20	7	A36	.60
2026	3A	12.1	33.11	27.0	55.18	4	200.	.00800	3.00	.00	0.	20	9	A36	.80
2026	4A	7.3	23.82	34.3	74.50	4	190.	.00500	3.50	.00	0.	220	6	A41	.05
2026	5A	1.6	5.87	35.9	77.65	4	1.	.01000	3.25	.00	0.	220	5	A41	.05

Version 11.3, MODIFIED RATIONAL METHOD HYDROLOGY - STORM YEAR = 50 SOIL DATA FILE:
BLACKHALL-DEV D MODEL DESIGN EVENT
HYDROGRAPH AT 2026 5A STORM DAY 4 REDUCTION FACTOR = 1.000

TIME	Q	TIME	Q	TIME	Q	TIME	Q	TIME	Q
0	.00	100	3.37	200	3.51	300	3.69	400	3.89
500	4.16	600	4.46	700	4.86	800	5.39	900	6.25
1000	7.78	1050	9.81	1100	13.11	1110	15.55	1120	18.16
1130	21.37	1131	21.80	1132	22.17	1133	22.60	1134	23.10
1135	23.67	1136	24.23	1137	24.89	1138	25.64	1139	26.42
1140	27.15	1141	28.03	1142	29.10	1143	30.21	1144	31.23
1145	32.60	1146	34.35	1147	36.22	1148	37.97	1149	42.10
1150	48.89	1151	56.61	1152	64.22	1153	71.88	1154	76.66
1155	77.65	1156	75.51	1157	72.05	1158	67.64	1159	62.20
1160	56.35	1161	51.54	1162	46.86	1163	42.61	1164	39.66
1165	37.85	1166	36.48	1167	35.30	1168	34.15	1169	33.05
1170	31.95	1171	30.87	1172	29.67	1173	28.28	1174	26.66
1175	24.85	1176	22.95	1177	21.07	1178	19.39	1179	17.91
1180	16.70	1181	15.67	1182	14.85	1183	14.17	1184	13.58
1185	13.07	1186	12.64	1187	12.26	1188	11.91	1189	11.58
1190	11.30	1191	11.03	1192	10.81	1193	10.61	1194	10.40
1195	10.21	1196	10.04	1197	9.87	1198	9.71	1199	9.55
1200	9.40	1201	9.25	1202	9.10	1203	8.98	1204	8.87
1205	8.76	1206	8.64	1207	8.54	1208	8.45	1209	8.35
1210	8.23	1211	8.13	1212	8.04	1213	7.95	1214	7.88
1215	7.80	1216	7.71	1217	7.62	1218	7.54	1219	7.46
1220	7.41	1221	7.34	1222	7.26	1223	7.19	1224	7.13
1225	7.09	1226	7.03	1227	6.97	1228	6.89	1229	6.82
1230	6.78	1231	6.74	1232	6.69	1233	6.61	1234	6.54
1235	6.49	1236	6.45	1237	6.40	1238	6.34	1239	6.29
1240	6.26	1241	6.22	1242	6.18	1243	6.14	1244	6.10
1245	6.05	1246	6.01	1247	5.98	1248	5.95	1249	5.89
1250	5.83	1251	5.80	1252	5.78	1253	5.76	1254	5.73
1255	5.70	1256	5.67	1257	5.64	1258	5.62	1259	5.60
1260	5.57	1261	5.53	1262	5.49	1263	5.47	1264	5.45
1265	5.43	1266	5.41	1267	5.37	1268	5.33	1269	5.30
1270	5.29	1271	5.27	1272	5.24	1273	5.20	1274	5.17
1275	5.16	1276	5.14	1277	5.13	1278	5.10	1279	5.10
1280	5.08	1281	5.07	1282	5.05	1283	5.04	1284	5.03
1285	5.01	1286	4.97	1287	4.95	1288	4.94	1289	4.92
1290	4.89	1291	4.86	1292	4.83	1293	4.81	1294	4.79
1295	4.79	1296	4.79	1297	4.78	1298	4.74	1299	4.73
1300	4.72	1310	4.58	1320	4.41	1330	4.29	1340	4.20
1350	4.08	1360	3.97	1370	3.85	1380	3.78	1390	3.74
1400	3.63	1420	3.51	1440	3.41	1460	3.31	1500	3.31

TOTAL VOLUME THIS HYDROGRAPH = 12.92(Ac.Ft)

BLACKHALL STUDIOS

10-YEAR CLEAR

EXISTING CONDITION

```
006  2026    1A  20 1020.717A412 1645001400                 0  G1
006  2026    2A  20  830.620A412280.0003600                 0
006  2026    3A  20  0  .099A412  1.0001000                 02  2
```

Version 11.3, MODIFIED RATIONAL METHOD HYDROLOGY - STORM YEAR = 10 SOIL DATA FILE: C:\civild\scr_soilx_34.dat
BLACKHALL-EX A MODEL 10-YEAR CLEAR STORM DAY 4

LOCATION		SUBAREA AREA(Ac)	SUBAREA Q(CFS)	TOTAL AREA(Ac)	TOTAL Q(CFS)	CONV TYPE	CONV LNGTH(Ft)	CONV SLOPE	CONV SIZE(Ft)	CONV Z	CONTROL Q(CFS)	SOIL NAME	TC	RAIN ZONE	PCT IMPV
2026	1A	20.7	22.35	20.7	22.35	2	1645.	.01400	.00	.00	0.	20	17	A41	.10
2026	2A	30.6	29.40	51.3	43.86	2	280.	.03600	.00	.00	0.	20	20	A41	.08
2026	3A	.0	.00	51.3	43.79	2	1.	.01000	.00	.00	0.	20	99	A41	.00

Version 11.3, MODIFIED RATIONAL METHOD HYDROLOGY - STORM YEAR = 10 SOIL DATA FILE:
BLACKHALL-EX A MODEL 10-YEAR CLEAR
HYDROGRAPH AT 2026 3A STORM DAY 4 REDUCTION FACTOR = 1.000

TIME	Q	TIME	Q	TIME	Q	TIME	Q	TIME	Q
0	.00	100	1.15	200	1.20	300	1.26	400	1.33
500	1.42	600	1.52	700	1.66	800	1.83	900	2.09
1000	2.52	1050	3.63	1100	5.55	1110	6.41	1120	8.18
1130	10.39	1131	10.61	1132	10.84	1133	11.10	1134	11.38
1135	11.69	1136	12.01	1137	12.34	1138	12.71	1139	13.11
1140	13.53	1141	13.96	1142	14.42	1143	14.92	1144	15.42
1145	15.97	1146	16.68	1147	17.55	1148	18.52	1149	19.94
1150	22.35	1151	25.40	1152	28.57	1153	31.88	1154	34.67
1155	36.27	1156	37.23	1157	38.21	1158	39.28	1159	40.47
1160	41.64	1161	42.59	1162	43.22	1163	43.61	1164	43.79
1165	43.66	1166	43.13	1167	42.34	1168	41.40	1169	39.80
1170	37.13	1171	33.91	1172	30.69	1173	27.57	1174	24.78
1175	22.64	1176	20.94	1177	19.36	1178	17.86	1179	16.46
1180	15.18	1181	14.05	1182	13.06	1183	12.18	1184	11.39
1185	10.67	1186	10.04	1187	9.45	1188	8.92	1189	8.44
1190	8.01	1191	7.62	1192	7.25	1193	6.90	1194	6.60
1195	6.32	1196	6.05	1197	5.81	1198	5.58	1199	5.38
1200	5.18	1201	4.98	1202	4.81	1203	4.64	1204	4.49
1205	4.35	1206	4.22	1207	4.09	1208	3.96	1209	3.85
1210	3.74	1211	3.64	1212	3.55	1213	3.47	1214	3.39
1215	3.32	1216	3.25	1217	3.19	1218	3.13	1219	3.07
1220	3.02	1221	2.96	1222	2.91	1223	2.87	1224	2.82
1225	2.78	1226	2.74	1227	2.70	1228	2.67	1229	2.63
1230	2.59	1231	2.57	1232	2.54	1233	2.51	1234	2.48
1235	2.46	1236	2.43	1237	2.41	1238	2.38	1239	2.36
1240	2.34	1241	2.32	1242	2.30	1243	2.28	1244	2.26
1245	2.24	1246	2.22	1247	2.21	1248	2.19	1249	2.17
1250	2.16	1251	2.14	1252	2.13	1253	2.11	1254	2.10
1255	2.08	1256	2.07	1257	2.06	1258	2.05	1259	2.04
1260	2.02	1261	2.01	1262	2.00	1263	1.99	1264	1.98
1265	1.96	1266	1.95	1267	1.94	1268	1.93	1269	1.92
1270	1.91	1271	1.90	1272	1.90	1273	1.89	1274	1.88
1275	1.87	1276	1.86	1277	1.85	1278	1.84	1279	1.83
1280	1.82	1281	1.82	1282	1.81	1283	1.80	1284	1.79
1285	1.78	1286	1.78	1287	1.76	1288	1.76	1289	1.75
1290	1.75	1291	1.74	1292	1.73	1293	1.72	1294	1.72
1295	1.71	1296	1.70	1297	1.70	1298	1.69	1299	1.68
1300	1.67	1310	1.61	1320	1.57	1330	1.51	1340	1.48
1350	1.43	1360	1.40	1370	1.36	1380	1.33	1390	1.30
1400	1.27	1420	1.23	1440	1.18	1460	1.15	1500	1.15

TOTAL VOLUME THIS HYDROGRAPH = 5.59(Ac.Ft)

```
006  2026    1A  20  5 4.519A412150.0003300                 0  G1
006  2026    2A  20  0  .099A412  1.0001000                 02  2
```

Version 11.3, MODIFIED RATIONAL METHOD HYDROLOGY - STORM YEAR = 10 SOIL DATA FILE: C:\civild\scr_soilx_34.dat
BLACKHALL-EX B MODEL 10-YEAR CLEAR STORM DAY 4

LOCATION		SUBAREA AREA(Ac)	SUBAREA Q(CFS)	TOTAL AREA(Ac)	TOTAL Q(CFS)	CONV TYPE	CONV LNGTH(Ft)	CONV SLOPE	CONV SIZE(Ft)	CONV Z	CONTROL Q(CFS)	SOIL NAME	TC	RAIN ZONE	PCT IMPV
2026	1A	4.5	4.36	4.5	4.36	2	150.	.03300	.00	.00	0.	20	19	A41	.05
2026	2A	.0	.00	4.5	4.36	2	1.	.01000	.00	.00	0.	20	99	A41	.00

LOS ANGELES COUNTY FLOOD CONTROL DISTRICT

PROG F0601M

Version 11.3, MODIFIED RATIONAL METHOD HYDROLOGY - STORM YEAR = 10 SOIL DATA FILE:
BLACKHALL-EX B MODEL 10-YEAR CLEAR
HYDROGRAPH AT 2026 2A STORM DAY 4 REDUCTION FACTOR = 1.000

TIME	Q	TIME	Q	TIME	Q	TIME	Q	TIME	Q
0	.00	100	.00	200	.00	300	.00	400	.00
500	.10	600	.11	700	.12	800	.13	900	.15
1000	.19	1050	.29	1100	.46	1110	.56	1120	.76
1130	.98	1131	1.00	1132	1.02	1133	1.04	1134	1.07
1135	1.10	1136	1.13	1137	1.17	1138	1.21	1139	1.25
1140	1.30	1141	1.34	1142	1.39	1143	1.44	1144	1.50
1145	1.56	1146	1.65	1147	1.76	1148	1.88	1149	2.07
1150	2.41	1151	2.84	1152	3.28	1153	3.74	1154	4.12
1155	4.30	1156	4.35	1157	4.36	1158	4.34	1159	4.30
1160	4.25	1161	4.17	1162	4.08	1163	3.98	1164	3.87
1165	3.72	1166	3.55	1167	3.37	1168	3.13	1169	2.75
1170	2.30	1171	1.87	1172	1.48	1173	1.16	1174	.96
1175	.84	1176	.75	1177	.69	1178	.63	1179	.58
1180	.54	1181	.51	1182	.49	1183	.47	1184	.45
1185	.43	1186	.41	1187	.40	1188	.38	1189	.37
1190	.36	1191	.34	1192	.33	1193	.32	1194	.31
1195	.30	1196	.29	1197	.28	1198	.28	1199	.27
1200	.26	1201	.25	1202	.24	1203	.24	1204	.23
1205	.23	1206	.22	1207	.21	1208	.21	1209	.20
1210	.20	1211	.19	1212	.19	1213	.19	1214	.18
1215	.18	1216	.18	1217	.18	1218	.18	1219	.18
1220	.18	1221	.17	1222	.17	1223	.17	1224	.17
1225	.17	1226	.17	1227	.17	1228	.16	1229	.16
1230	.16	1231	.16	1232	.16	1233	.16	1234	.16
1235	.16	1236	.16	1237	.16	1238	.15	1239	.15
1240	.15	1241	.15	1242	.15	1243	.15	1244	.15
1245	.15	1246	.15	1247	.15	1248	.15	1249	.14
1250	.14	1251	.14	1252	.14	1253	.14	1254	.14
1255	.14	1256	.14	1257	.14	1258	.14	1259	.14
1260	.14	1261	.14	1262	.14	1263	.13	1264	.13
1265	.13	1266	.13	1267	.13	1268	.13	1269	.13
1270	.13	1271	.13	1272	.13	1273	.13	1274	.13
1275	.13	1276	.13	1277	.13	1278	.13	1279	.13
1280	.12	1281	.12	1282	.12	1283	.12	1284	.12
1285	.12	1286	.12	1287	.12	1288	.12	1289	.12
1290	.12	1291	.12	1292	.12	1293	.12	1294	.12
1295	.12	1296	.12	1297	.12	1298	.12	1299	.12
1300	.12	1310	.11	1320	.11	1330	.11	1340	.10
1350	.10	1360	.00	1370	.00	1380	.00	1390	.00
1400	.00	1420	.00	1440	.00	1460	.00	1500	.00

TOTAL VOLUME THIS HYDROGRAPH = .36(Ac.Ft)

```
006  2026    1A  20  813.228A412130.0003800                 0  G1
006  2026    2A  20  0  .099A412  1.0001000                 02  2
```

Version 11.3, MODIFIED RATIONAL METHOD HYDROLOGY - STORM YEAR = 10 SOIL DATA FILE: C:\civild\scr_soilx_34.dat
BLACKHALL-EX C MODEL 10-YEAR CLEAR STORM DAY 4

LOCATION		SUBAREA AREA(Ac)	SUBAREA Q(CFS)	TOTAL AREA(Ac)	TOTAL Q(CFS)	CONV TYPE	CONV LNGTH(Ft)	CONV SLOPE	CONV SIZE(Ft)	CONV Z	CONTROL Q(CFS)	SOIL NAME	TC	RAIN ZONE	PCT IMPV
2026	1A	13.2	10.07	13.2	10.07	2	130.	.03800	.00	.00	0.	20	28	A41	.08
2026	2A	.0	.00	13.2	10.06	2	1.	.01000	.00	.00	0.	20	99	A41	.00

LOS ANGELES COUNTY FLOOD CONTROL DISTRICT

PROG F0601M

Version 11.3, MODIFIED RATIONAL METHOD HYDROLOGY - STORM YEAR = 10 SOIL DATA FILE:
BLACKHALL-EX C MODEL 10-YEAR CLEAR
HYDROGRAPH AT 2026 2A STORM DAY 4 REDUCTION FACTOR = 1.000

TIME	Q	TIME	Q	TIME	Q	TIME	Q	TIME	Q
0	.00	100	.29	200	.30	300	.31	400	.33
500	.35	600	.38	700	.41	800	.46	900	.53
1000	.64	1050	.97	1100	1.48	1110	1.69	1120	2.13
1130	2.79	1131	2.86	1132	2.92	1133	2.99	1134	3.07
1135	3.15	1136	3.24	1137	3.33	1138	3.43	1139	3.54
1140	3.64	1141	3.74	1142	3.88	1143	4.02	1144	4.16
1145	4.33	1146	4.54	1147	4.77	1148	5.00	1149	5.46
1150	6.26	1151	7.15	1152	8.03	1153	8.91	1154	9.54
1155	9.80	1156	9.92	1157	10.00	1158	10.05	1159	10.06
1160	10.03	1161	9.96	1162	9.88	1163	9.79	1164	9.68
1165	9.55	1166	9.40	1167	9.25	1168	9.09	1169	8.90
1170	8.68	1171	8.44	1172	8.21	1173	7.94	1174	7.60
1175	7.25	1176	6.90	1177	6.31	1178	5.46	1179	4.62
1180	3.87	1181	3.13	1182	2.54	1183	2.19	1184	1.98
1185	1.82	1186	1.69	1187	1.59	1188	1.52	1189	1.45
1190	1.39	1191	1.34	1192	1.28	1193	1.24	1194	1.19
1195	1.15	1196	1.12	1197	1.08	1198	1.05	1199	1.01
1200	.98	1201	.96	1202	.93	1203	.90	1204	.88
1205	.86	1206	.84	1207	.81	1208	.79	1209	.77
1210	.75	1211	.73	1212	.72	1213	.70	1214	.68
1215	.67	1216	.65	1217	.64	1218	.64	1219	.63
1220	.63	1221	.62	1222	.61	1223	.61	1224	.60
1225	.60	1226	.59	1227	.59	1228	.59	1229	.58
1230	.58	1231	.57	1232	.57	1233	.56	1234	.56
1235	.56	1236	.55	1237	.55	1238	.54	1239	.54
1240	.54	1241	.53	1242	.53	1243	.53	1244	.52
1245	.52	1246	.52	1247	.51	1248	.51	1249	.51
1250	.50	1251	.50	1252	.50	1253	.49	1254	.49
1255	.49	1256	.49	1257	.49	1258	.48	1259	.48
1260	.48	1261	.48	1262	.47	1263	.47	1264	.47
1265	.47	1266	.46	1267	.46	1268	.46	1269	.46
1270	.46	1271	.45	1272	.45	1273	.45	1274	.45
1275	.45	1276	.44	1277	.44	1278	.44	1279	.44
1280	.44	1281	.43	1282	.43	1283	.43	1284	.43
1285	.43	1286	.42	1287	.42	1288	.42	1289	.42
1290	.42	1291	.42	1292	.42	1293	.41	1294	.41
1295	.41	1296	.41	1297	.41	1298	.41	1299	.40
1300	.40	1310	.39	1320	.38	1330	.37	1340	.36
1350	.35	1360	.34	1370	.33	1380	.32	1390	.31
1400	.31	1420	.30	1440	.29	1460	.29	1500	.29

TOTAL VOLUME THIS HYDROGRAPH = 1.39(Ac.Ft)

```
006  2026    1A  20  521.416A412250.0001000                 0  G1
006  2026    2A  20  0  .099A412  1.0001000                 02  2
```

Version 11.3, MODIFIED RATIONAL METHOD HYDROLOGY - STORM YEAR = 10 SOIL DATA FILE: C:\civild\scr_soilx_34.dat
BLACKHALL-EX X MODEL 10-YEAR CLEAR STORM DAY 4

LOCATION		SUBAREA AREA(Ac)	SUBAREA Q(CFS)	TOTAL AREA(Ac)	TOTAL Q(CFS)	CONV TYPE	CONV LNGTH(Ft)	CONV SLOPE	CONV SIZE(Ft)	CONV Z	CONTROL Q(CFS)	SOIL NAME	TC	RAIN ZONE	PCT IMPV
2026	1A	21.4	23.23	21.4	23.23	2	250.	.01000	.00	.00	0.	20	16	A41	.05
2026	2A	.0	.00	21.4	23.06	2	1.	.01000	.00	.00	0.	20	99	A41	.00

Version 11.3, MODIFIED RATIONAL METHOD HYDROLOGY - STORM YEAR = 10 SOIL DATA FILE:
BLACKHALL-EX X MODEL 10-YEAR CLEAR
HYDROGRAPH AT 2026 2A STORM DAY 4 REDUCTION FACTOR = 1.000

TIME	Q	TIME	Q	TIME	Q	TIME	Q	TIME	Q
0	.00	100	.40	200	.41	300	.43	400	.46
500	.49	600	.52	700	.57	800	.63	900	.72
1000	.88	1050	1.36	1100	2.15	1110	2.64	1120	3.55
1130	4.59	1131	4.70	1132	4.80	1133	4.92	1134	5.05
1135	5.21	1136	5.38	1137	5.56	1138	5.74	1139	5.92
1140	6.11	1141	6.29	1142	6.50	1143	6.76	1144	7.06
1145	7.36	1146	7.75	1147	8.29	1148	8.92	1149	9.58
1150	10.70	1151	12.55	1152	14.87	1153	17.46	1154	20.05
1155	21.90	1156	22.74	1157	23.06	1158	23.04	1159	22.79
1160	22.44	1161	22.01	1162	21.40	1163	20.63	1164	19.78
1165	18.86	1166	17.33	1167	15.14	1168	12.85	1169	10.58
1170	8.47	1171	6.78	1172	5.62	1173	4.84	1174	4.29
1175	3.85	1176	3.51	1177	3.23	1178	2.98	1179	2.77
1180	2.60	1181	2.46	1182	2.34	1183	2.23	1184	2.14
1185	2.05	1186	1.97	1187	1.90	1188	1.84	1189	1.77
1190	1.71	1191	1.66	1192	1.60	1193	1.54	1194	1.50
1195	1.45	1196	1.41	1197	1.37	1198	1.33	1199	1.29
1200	1.25	1201	1.22	1202	1.18	1203	1.15	1204	1.12
1205	1.08	1206	1.06	1207	1.03	1208	1.00	1209	.98
1210	.96	1211	.94	1212	.92	1213	.90	1214	.89
1215	.88	1216	.87	1217	.87	1218	.86	1219	.85
1220	.84	1221	.84	1222	.83	1223	.82	1224	.81
1225	.81	1226	.80	1227	.79	1228	.79	1229	.78
1230	.78	1231	.77	1232	.77	1233	.76	1234	.76
1235	.75	1236	.75	1237	.74	1238	.74	1239	.73
1240	.73	1241	.72	1242	.72	1243	.71	1244	.71
1245	.71	1246	.70	1247	.70	1248	.70	1249	.69
1250	.69	1251	.68	1252	.68	1253	.67	1254	.67
1255	.67	1256	.66	1257	.66	1258	.66	1259	.65
1260	.65	1261	.65	1262	.64	1263	.64	1264	.64
1265	.64	1266	.63	1267	.63	1268	.63	1269	.63
1270	.62	1271	.62	1272	.62	1273	.61	1274	.61
1275	.61	1276	.60	1277	.60	1278	.60	1279	.60
1280	.60	1281	.59	1282	.59	1283	.59	1284	.59
1285	.58	1286	.58	1287	.58	1288	.58	1289	.58
1290	.57	1291	.57	1292	.57	1293	.57	1294	.56
1295	.56	1296	.56	1297	.56	1298	.56	1299	.56
1300	.55	1310	.53	1320	.52	1330	.51	1340	.49
1350	.48	1360	.47	1370	.45	1380	.45	1390	.43
1400	.43	1420	.41	1440	.40	1460	.40	1500	.40

TOTAL VOLUME THIS HYDROGRAPH = 2.05(Ac.Ft)

BLACKHALL STUDIOS

25-YEAR CLEAR

EXISTING CONDITION

```
006  2026    1A  20 1020.713A412 1645001400                 0  G1
006  2026    2A  20  830.616A412280.0003600                 0
006  2026    3A  20  0  .099A412  1.0001000                 02  2
```

Version 11.3, MODIFIED RATIONAL METHOD HYDROLOGY - STORM YEAR = 25 SOIL DATA FILE: C:\civild\scr_soilx_34.dat
BLACKHALL-EX A MODEL 25-YEAR CLEAR STORM DAY 4

LOCATION		SUBAREA AREA(Ac)	SUBAREA Q(CFS)	TOTAL AREA(Ac)	TOTAL Q(CFS)	CONV TYPE	CONV LNGTH(Ft)	CONV SLOPE	CONV SIZE(Ft)	CONV Z	CONTROL Q(CFS)	SOIL NAME	TC	RAIN ZONE	PCT IMPV
2026	1A	20.7	35.06	20.7	35.06	2	1645.	.01400	.00	.00	0.	20	13	A41	.10
2026	2A	30.6	45.24	51.3	66.84	2	280.	.03600	.00	.00	0.	20	16	A41	.08
2026	3A	.0	.00	51.3	66.72	2	1.	.01000	.00	.00	0.	20	99	A41	.00

LOS ANGELES COUNTY FLOOD CONTROL DISTRICT

PROG F0601M

Version 11.3, MODIFIED RATIONAL METHOD HYDROLOGY - STORM YEAR = 25 SOIL DATA FILE:
BLACKHALL-EX A MODEL 25-YEAR CLEAR
HYDROGRAPH AT 2026 3A STORM DAY 4 REDUCTION FACTOR = 1.000

TIME	Q	TIME	Q	TIME	Q	TIME	Q	TIME	Q
0	.00	100	1.42	200	1.48	300	1.55	400	1.64
500	1.74	600	1.87	700	2.04	800	2.26	900	2.58
1000	3.72	1050	5.25	1100	8.06	1110	9.63	1120	12.05
1130	14.96	1131	15.29	1132	15.63	1133	16.01	1134	16.43
1135	16.88	1136	17.34	1137	17.82	1138	18.33	1139	18.89
1140	19.46	1141	20.10	1142	20.89	1143	21.79	1144	22.68
1145	23.70	1146	25.01	1147	26.49	1148	27.98	1149	30.28
1150	34.34	1151	39.39	1152	44.66	1153	50.11	1154	54.44
1155	56.83	1156	58.53	1157	60.35	1158	62.24	1159	64.08
1160	65.65	1161	66.57	1162	66.72	1163	66.30	1164	65.44
1165	63.08	1166	58.70	1167	53.49	1168	48.07	1169	42.43
1170	37.49	1171	33.97	1172	31.20	1173	28.61	1174	26.20
1175	23.99	1176	22.03	1177	20.31	1178	18.79	1179	17.44
1180	16.25	1181	15.20	1182	14.25	1183	13.38	1184	12.59
1185	11.89	1186	11.27	1187	10.69	1188	10.18	1189	9.72
1190	9.31	1191	8.91	1192	8.53	1193	8.20	1194	7.92
1195	7.64	1196	7.36	1197	7.10	1198	6.86	1199	6.63
1200	6.43	1201	6.24	1202	6.06	1203	5.89	1204	5.73
1205	5.59	1206	5.45	1207	5.32	1208	5.20	1209	5.09
1210	4.97	1211	4.84	1212	4.73	1213	4.62	1214	4.52
1215	4.44	1216	4.36	1217	4.28	1218	4.19	1219	4.11
1220	4.03	1221	3.95	1222	3.87	1223	3.81	1224	3.75
1225	3.68	1226	3.62	1227	3.56	1228	3.50	1229	3.44
1230	3.39	1231	3.33	1232	3.27	1233	3.22	1234	3.17
1235	3.12	1236	3.08	1237	3.04	1238	3.01	1239	2.97
1240	2.93	1241	2.90	1242	2.87	1243	2.84	1244	2.82
1245	2.79	1246	2.77	1247	2.74	1248	2.71	1249	2.68
1250	2.66	1251	2.64	1252	2.61	1253	2.59	1254	2.57
1255	2.56	1256	2.54	1257	2.52	1258	2.51	1259	2.49
1260	2.47	1261	2.45	1262	2.43	1263	2.42	1264	2.41
1265	2.39	1266	2.38	1267	2.37	1268	2.36	1269	2.34
1270	2.33	1271	2.32	1272	2.31	1273	2.29	1274	2.28
1275	2.27	1276	2.26	1277	2.25	1278	2.24	1279	2.23
1280	2.22	1281	2.21	1282	2.20	1283	2.18	1284	2.17
1285	2.17	1286	2.16	1287	2.15	1288	2.14	1289	2.13
1290	2.12	1291	2.11	1292	2.10	1293	2.10	1294	2.09
1295	2.08	1296	2.07	1297	2.07	1298	2.06	1299	2.05
1300	2.04	1310	1.97	1320	1.90	1330	1.85	1340	1.80
1350	1.75	1360	1.71	1370	1.66	1380	1.63	1390	1.59
1400	1.56	1420	1.50	1440	1.44	1460	1.42	1500	1.42

TOTAL VOLUME THIS HYDROGRAPH = 7.37(Ac.Ft)

```
006  2026    1A  20  5 4.515A412150.0003300                 0  G1
006  2026    2A  20  0  .099A412  1.0001000                 02  2
```

Version 11.3, MODIFIED RATIONAL METHOD HYDROLOGY - STORM YEAR = 25 SOIL DATA FILE: C:\civild\scr_soilx_34.dat
BLACKHALL-EX B MODEL 25-YEAR CLEAR STORM DAY 4

LOCATION		SUBAREA AREA(Ac)	SUBAREA Q(CFS)	TOTAL AREA(Ac)	TOTAL Q(CFS)	CONV TYPE	CONV LNGTH(Ft)	CONV SLOPE	CONV SIZE(Ft)	CONV Z	CONTROL Q(CFS)	SOIL NAME	TC	RAIN ZONE	PCT IMPV
2026	1A	4.5	6.83	4.5	6.83	2	150.	.03300	.00	.00	0.	20	15	A41	.05
2026	2A	.0	.00	4.5	6.81	2	1.	.01000	.00	.00	0.	20	99	A41	.00

Version 11.3, MODIFIED RATIONAL METHOD HYDROLOGY - STORM YEAR = 25 SOIL DATA FILE:
BLACKHALL-EX B MODEL 25-YEAR CLEAR
HYDROGRAPH AT 2026 2A STORM DAY 4 REDUCTION FACTOR = 1.000

TIME	Q	TIME	Q	TIME	Q	TIME	Q	TIME	Q
0	.00	100	.10	200	.11	300	.11	400	.12
500	.13	600	.14	700	.15	800	.16	900	.19
1000	.29	1050	.43	1100	.68	1110	.87	1120	1.12
1130	1.39	1131	1.42	1132	1.45	1133	1.49	1134	1.53
1135	1.58	1136	1.63	1137	1.67	1138	1.73	1139	1.79
1140	1.85	1141	1.93	1142	2.02	1143	2.13	1144	2.25
1145	2.37	1146	2.54	1147	2.72	1148	2.89	1149	3.19
1150	3.76	1151	4.48	1152	5.22	1153	5.98	1154	6.54
1155	6.78	1156	6.81	1157	6.76	1158	6.67	1159	6.56
1160	6.40	1161	6.18	1162	5.92	1163	5.65	1164	5.23
1165	4.55	1166	3.78	1167	3.05	1168	2.36	1169	1.79
1170	1.46	1171	1.29	1172	1.17	1173	1.08	1174	1.00
1175	.94	1176	.88	1177	.83	1178	.79	1179	.74
1180	.71	1181	.67	1182	.64	1183	.61	1184	.59
1185	.56	1186	.54	1187	.52	1188	.50	1189	.49
1190	.47	1191	.46	1192	.45	1193	.44	1194	.43
1195	.42	1196	.41	1197	.40	1198	.39	1199	.38
1200	.37	1201	.36	1202	.35	1203	.34	1204	.34
1205	.33	1206	.32	1207	.32	1208	.31	1209	.31
1210	.30	1211	.29	1212	.29	1213	.28	1214	.28
1215	.27	1216	.27	1217	.27	1218	.26	1219	.25
1220	.25	1221	.24	1222	.24	1223	.24	1224	.23
1225	.23	1226	.22	1227	.22	1228	.22	1229	.21
1230	.21	1231	.21	1232	.20	1233	.20	1234	.20
1235	.19	1236	.19	1237	.19	1238	.19	1239	.19
1240	.18	1241	.18	1242	.18	1243	.18	1244	.18
1245	.18	1246	.18	1247	.18	1248	.18	1249	.18
1250	.17	1251	.17	1252	.17	1253	.17	1254	.17
1255	.17	1256	.17	1257	.17	1258	.17	1259	.17
1260	.17	1261	.16	1262	.16	1263	.16	1264	.16
1265	.16	1266	.16	1267	.16	1268	.16	1269	.16
1270	.16	1271	.16	1272	.16	1273	.16	1274	.16
1275	.16	1276	.15	1277	.15	1278	.15	1279	.15
1280	.15	1281	.15	1282	.15	1283	.15	1284	.15
1285	.15	1286	.15	1287	.15	1288	.15	1289	.15
1290	.15	1291	.15	1292	.15	1293	.14	1294	.14
1295	.14	1296	.14	1297	.14	1298	.14	1299	.14
1300	.14	1310	.14	1320	.13	1330	.13	1340	.13
1350	.12	1360	.12	1370	.12	1380	.11	1390	.11
1400	.11	1420	.11	1440	.10	1460	.10	1500	.10

TOTAL VOLUME THIS HYDROGRAPH = .57(Ac.Ft)

```
006  2026    1A  20  813.222A412130.0003800                 0  G1
006  2026    2A  20  0  .099A412  1.0001000                 02  2
```

Version 11.3, MODIFIED RATIONAL METHOD HYDROLOGY - STORM YEAR = 25 SOIL DATA FILE: C:\civild\scr_soilx_34.dat
BLACKHALL-EX C MODEL 25-YEAR CLEAR STORM DAY 4

LOCATION		SUBAREA AREA(Ac)	SUBAREA Q(CFS)	TOTAL AREA(Ac)	TOTAL Q(CFS)	CONV TYPE	CONV LNGTH(Ft)	CONV SLOPE	CONV SIZE(Ft)	CONV Z	CONTROL Q(CFS)	SOIL NAME	TC	RAIN ZONE	PCT IMPV
2026	1A	13.2	15.89	13.2	15.89	2	130.	.03800	.00	.00	0.	20	22	A41	.08
2026	2A	.0	.00	13.2	15.87	2	1.	.01000	.00	.00	0.	20	99	A41	.00

LOS ANGELES COUNTY FLOOD CONTROL DISTRICT

PROG F0601M

Version 11.3, MODIFIED RATIONAL METHOD HYDROLOGY - STORM YEAR = 25 SOIL DATA FILE:
BLACKHALL-EX C MODEL 25-YEAR CLEAR
HYDROGRAPH AT 2026 2A STORM DAY 4 REDUCTION FACTOR = 1.000

TIME	Q	TIME	Q	TIME	Q	TIME	Q	TIME	Q
0	.00	100	.35	200	.37	300	.39	400	.41
500	.43	600	.47	700	.51	800	.56	900	.65
1000	.96	1050	1.40	1100	2.16	1110	2.58	1120	3.28
1130	4.07	1131	4.15	1132	4.25	1133	4.35	1134	4.45
1135	4.55	1136	4.66	1137	4.77	1138	4.91	1139	5.07
1140	5.23	1141	5.45	1142	5.72	1143	5.98	1144	6.21
1145	6.49	1146	6.86	1147	7.26	1148	7.66	1149	8.44
1150	9.79	1151	11.30	1152	12.82	1153	14.36	1154	15.39
1155	15.72	1156	15.85	1157	15.87	1158	15.86	1159	15.77
1160	15.60	1161	15.40	1162	15.18	1163	14.91	1164	14.56
1165	14.20	1166	13.85	1167	13.40	1168	12.85	1169	12.27
1170	11.69	1171	10.66	1172	9.17	1173	7.68	1174	6.25
1175	4.91	1176	3.98	1177	3.49	1178	3.20	1179	2.96
1180	2.77	1181	2.60	1182	2.46	1183	2.33	1184	2.21
1185	2.10	1186	2.00	1187	1.92	1188	1.83	1189	1.76
1190	1.69	1191	1.63	1192	1.58	1193	1.54	1194	1.50
1195	1.46	1196	1.43	1197	1.39	1198	1.35	1199	1.32
1200	1.29	1201	1.26	1202	1.23	1203	1.20	1204	1.18
1205	1.16	1206	1.14	1207	1.11	1208	1.09	1209	1.07
1210	1.05	1211	1.03	1212	1.01	1213	.99	1214	.97
1215	.96	1216	.94	1217	.92	1218	.91	1219	.89
1220	.88	1221	.87	1222	.85	1223	.84	1224	.83
1225	.81	1226	.80	1227	.78	1228	.77	1229	.76
1230	.74	1231	.73	1232	.72	1233	.71	1234	.70
1235	.69	1236	.68	1237	.67	1238	.66	1239	.65
1240	.65	1241	.64	1242	.64	1243	.63	1244	.63
1245	.63	1246	.62	1247	.62	1248	.62	1249	.61
1250	.61	1251	.61	1252	.60	1253	.60	1254	.60
1255	.59	1256	.59	1257	.59	1258	.59	1259	.58
1260	.58	1261	.57	1262	.57	1263	.57	1264	.57
1265	.56	1266	.56	1267	.56	1268	.56	1269	.55
1270	.55	1271	.55	1272	.55	1273	.55	1274	.54
1275	.54	1276	.54	1277	.54	1278	.53	1279	.53
1280	.53	1281	.53	1282	.52	1283	.52	1284	.52
1285	.52	1286	.52	1287	.52	1288	.51	1289	.51
1290	.51	1291	.51	1292	.51	1293	.50	1294	.50
1295	.50	1296	.50	1297	.50	1298	.49	1299	.49
1300	.49	1310	.47	1320	.46	1330	.45	1340	.44
1350	.42	1360	.41	1370	.40	1380	.40	1390	.38
1400	.38	1420	.37	1440	.35	1460	.35	1500	.35

TOTAL VOLUME THIS HYDROGRAPH = 1.85(Ac.Ft)

```
006  2026    1A  20  521.413A412250.0001000                 0  G1
006  2026    2A  20  0  .099A412  1.0001000                 02  2
```

Version 11.3, MODIFIED RATIONAL METHOD HYDROLOGY - STORM YEAR = 25 SOIL DATA FILE: C:\civild\scr_soilx_34.dat
BLACKHALL-EX X MODEL 25-YEAR CLEAR STORM DAY 4

LOCATION		SUBAREA AREA(Ac)	SUBAREA Q(CFS)	TOTAL AREA(Ac)	TOTAL Q(CFS)	CONV TYPE	CONV LNGTH(Ft)	CONV SLOPE	CONV SIZE(Ft)	CONV Z	CONTROL Q(CFS)	SOIL NAME	TC	RAIN ZONE	PCT IMPV
2026	1A	21.4	35.34	21.4	35.34	2	250.	.01000	.00	.00	0.	20	13	A41	.05
2026	2A	.0	.00	21.4	35.03	2	1.	.01000	.00	.00	0.	20	99	A41	.00

LOS ANGELES COUNTY FLOOD CONTROL DISTRICT

PROG F0601M

Version 11.3, MODIFIED RATIONAL METHOD HYDROLOGY - STORM YEAR = 25 SOIL DATA FILE:
BLACKHALL-EX X MODEL 25-YEAR CLEAR
HYDROGRAPH AT 2026 2A STORM DAY 4 REDUCTION FACTOR = 1.000

TIME	Q	TIME	Q	TIME	Q	TIME	Q	TIME	Q
0	.00	100	.49	200	.51	300	.53	400	.56
500	.60	600	.64	700	.70	800	.78	900	.89
1000	1.36	1050	2.02	1100	3.20	1110	4.09	1120	5.29
1130	6.55	1131	6.70	1132	6.85	1133	7.02	1134	7.23
1135	7.44	1136	7.63	1137	7.81	1138	8.03	1139	8.32
1140	8.65	1141	9.00	1142	9.42	1143	9.95	1144	10.54
1145	11.12	1146	11.79	1147	12.60	1148	13.48	1149	14.38
1150	16.29	1151	19.56	1152	23.45	1153	27.63	1154	31.62
1155	34.17	1156	34.97	1157	35.03	1158	34.71	1159	33.99
1160	32.93	1161	31.66	1162	30.15	1163	27.50	1164	23.79
1165	19.91	1166	16.17	1167	12.63	1168	9.87	1169	8.16
1170	7.06	1171	6.31	1172	5.73	1173	5.26	1174	4.89
1175	4.58	1176	4.31	1177	4.07	1178	3.84	1179	3.63
1180	3.44	1181	3.28	1182	3.13	1183	3.00	1184	2.88
1185	2.75	1186	2.64	1187	2.54	1188	2.45	1189	2.38
1190	2.30	1191	2.24	1192	2.18	1193	2.12	1194	2.06
1195	2.01	1196	1.97	1197	1.92	1198	1.88	1199	1.83
1200	1.79	1201	1.74	1202	1.70	1203	1.66	1204	1.62
1205	1.59	1206	1.57	1207	1.54	1208	1.51	1209	1.48
1210	1.45	1211	1.42	1212	1.40	1213	1.37	1214	1.35
1215	1.33	1216	1.31	1217	1.29	1218	1.26	1219	1.24
1220	1.21	1221	1.19	1222	1.17	1223	1.14	1224	1.12
1225	1.11	1226	1.09	1227	1.07	1228	1.05	1229	1.04
1230	1.01	1231	.99	1232	.98	1233	.97	1234	.95
1235	.94	1236	.92	1237	.91	1238	.90	1239	.89
1240	.89	1241	.88	1242	.88	1243	.87	1244	.87
1245	.86	1246	.86	1247	.85	1248	.85	1249	.84
1250	.84	1251	.83	1252	.82	1253	.82	1254	.82
1255	.81	1256	.81	1257	.81	1258	.80	1259	.80
1260	.79	1261	.79	1262	.79	1263	.78	1264	.78
1265	.78	1266	.77	1267	.77	1268	.77	1269	.76
1270	.76	1271	.76	1272	.75	1273	.75	1274	.74
1275	.74	1276	.74	1277	.74	1278	.73	1279	.73
1280	.73	1281	.72	1282	.72	1283	.72	1284	.72
1285	.71	1286	.71	1287	.71	1288	.70	1289	.70
1290	.70	1291	.70	1292	.69	1293	.69	1294	.69
1295	.69	1296	.68	1297	.68	1298	.68	1299	.68
1300	.68	1310	.65	1320	.63	1330	.62	1340	.60
1350	.59	1360	.57	1370	.56	1380	.55	1390	.53
1400	.52	1420	.51	1440	.49	1460	.49	1500	.49

TOTAL VOLUME THIS HYDROGRAPH = 2.74(Ac.Ft)

APPENDIX C

HYDROMODIFICATION VOLUME
AND
BASIN FLOWTHRU CALCS

BASIN	COMPONENT	TOP AREA	BTM AREA	MID (AVG) AREA	DEPTH	FACTOR	VOLUME PROVIDED	
		SF	SF	SF	FT	%	CF	AC-FT
NORTH PARKING LOT	PONDING	68,870	39,912	53,991	10.00	100	539910	12.39
	FLOW THRU VOL *					100	225000	5.17
					BASIN TOTAL		**764910**	17.56

* Flow through calculation is provided below

* ENGINEER FACTORED INFILTRATION RATE ASSUMED AT 5IN/HR
Q_24 = 5 IN/HR * [1 FT / 12 IN] * [1 HR / 60 MIN] * [1 MIN / 60 SEC] * 53,991 SF (MID AREA) = 6.25 CFS

THE DURATION OF A DESIGN STORM EVENT (1500 MIN) BUT NOT INCLUDING THE FIRST 900 MINUTES (TO BE CONSERVATIVE) IS 600 MINUTES OF INFILTRATION TIME.

6.25 CFS * [600 MINUTE * (60 SECONDS / 1 MINUTE)] = 2,250,000 CF = 5.17 AC-FT FLOWTHRU VOLUME THAT INFILTRATES AND THEREFORE LEAVES THE BASIN DURING THE DESIGN STORM EVENT.

HYDROMODIFICATION (AND WATER QUALITY) VOLUME PROVIDED	
LOCATION	AC-FT
VOL PROV UG CHAMBERS	3.51
VOL PROV DRAINAGE BASIN	17.56
TOTAL	21.07

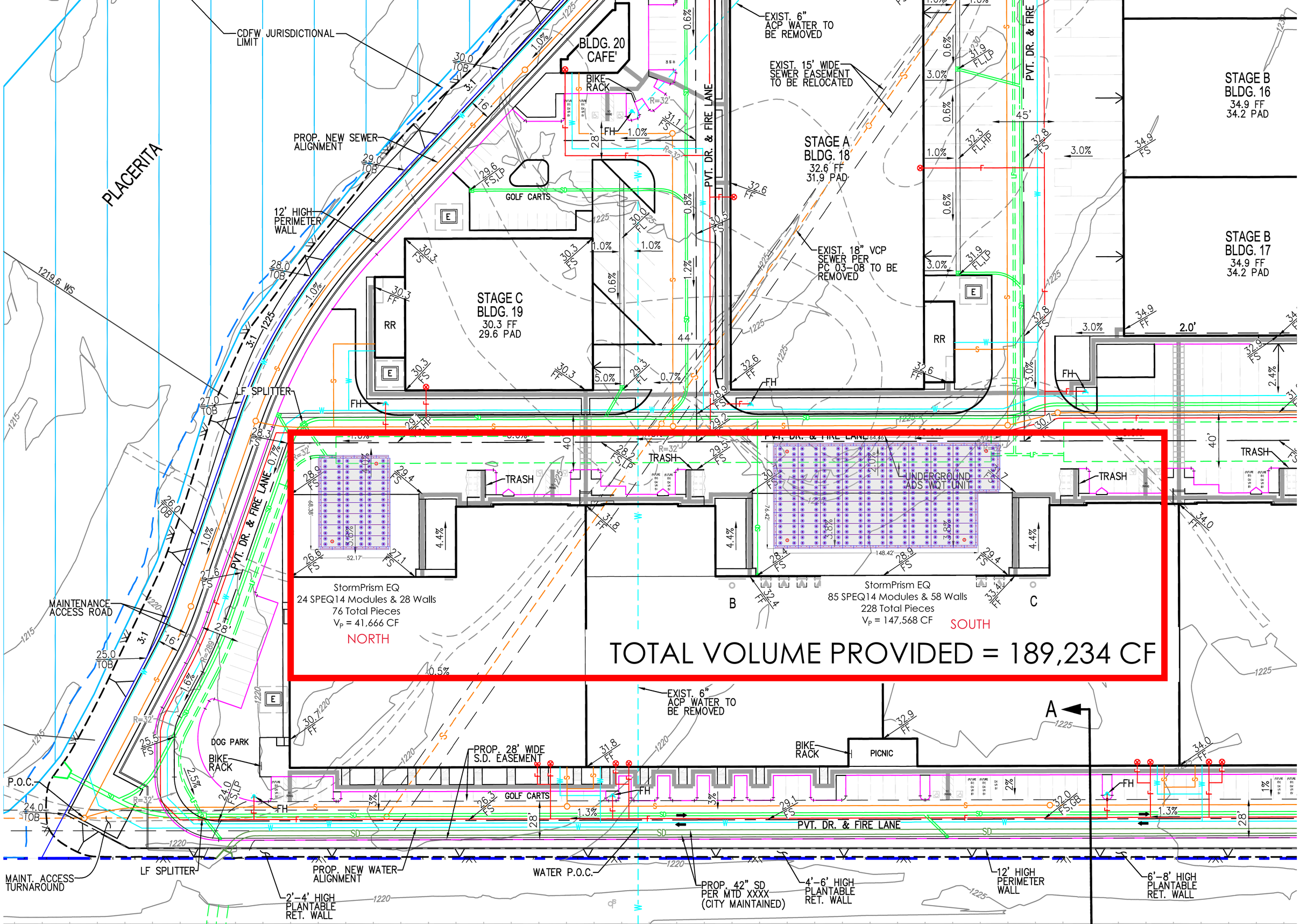
PLACERITA
CDFW JURISDICTIONAL LIMIT
BLDG. 20
CAFE'
BIKE RACK
EXIST. 6" ACP WATER TO BE REMOVED
EXIST. 15' WIDE SEWER EASEMENT TO BE RELOCATED
PVT. DR. & FIRE LANE
PROP. NEW SEWER ALIGNMENT
GOLF CARTS
12' HIGH PERIMETER WALL
STAGE A
BLDG. 18
32.6 FF
31.9 PAD
STAGE B
BLDG. 16
34.9 FF
34.2 PAD
STAGE B
BLDG. 17
34.9 FF
34.2 PAD
STAGE C
BLDG. 19
30.3 FF
29.6 PAD
EXIST. 18" VCP SEWER PER PC 03-08 TO BE REMOVED
RR
LF SPLITTER
TRASH
UNDERGROUND ADS MQT UNIT
StormPrism EQ
24 SPEQ14 Modules & 28 Walls
76 Total Pieces
V_P = 41,666 CF
NORTH
StormPrism EQ
85 SPEQ14 Modules & 58 Walls
228 Total Pieces
V_P = 147,568 CF
SOUTH
TOTAL VOLUME PROVIDED = 189,234 CF
MAINTENANCE ACCESS ROAD
DOG PARK
BIKE RACK
P.O.C.
EXIST. 6" ACP WATER TO BE REMOVED
PROP. 28' WIDE S.D. EASEMENT
PICNIC
GOLF CARTS
PVT. DR. & FIRE LANE
MAINT. ACCESS TURNAROUND
LF SPLITTER
PROP. NEW WATER ALIGNMENT
WATER P.O.C.
2'-4' HIGH PLANTABLE RET. WALL
PROP. 42" SD PER MTD XXXX (CITY MAINTAINED)
4'-6' HIGH PLANTABLE RET. WALL
12' HIGH PERIMETER WALL
6'-8' HIGH PLANTABLE RET. WALL
A

INFILTRATION

SHEET INFORMATION	
SHEET No.	DESCRIPTION
1	COVER SHEET / GENERAL NOTES
2	NOTES
3	NOTES
4	NORTH EQ SYSTEM OVERVIEW
5	SOUTH EQ SYSTEM OVERVIEW
6	STORMPRISM 14'-0" UNIT DETAIL
7	STORMPRISM 14'-0" BASE
8	STORMPRISM 14'-0" TOP
9	FILTER INFORMATION
10	STORMPRISM 15'-4" WALL DETAIL
11	UNIT MANWAY OPENING AND LADDER INFORMATION
12	JOINT SEALING INFORMATION
13	ELEVATION INFORMATION

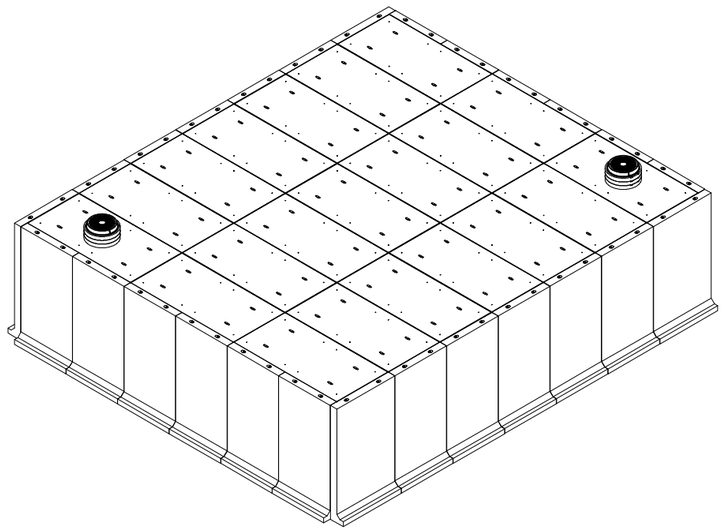

NORTH EQ SYSTEM
21 SPEQ, 14' MODULES
26 WALLS,
68 TOTAL PIECES
Vp=36,458 CF

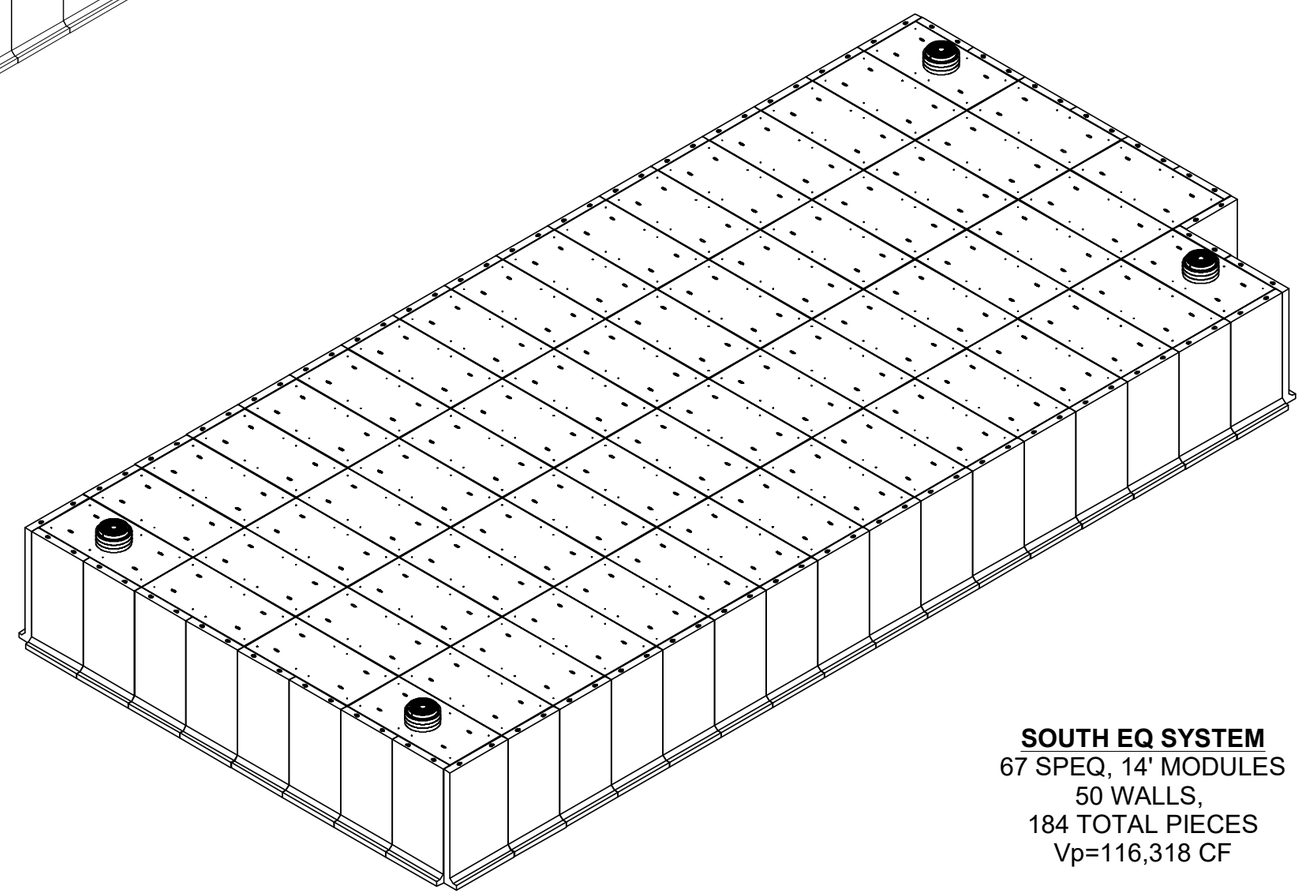

SOUTH EQ SYSTEM
67 SPEQ, 14' MODULES
50 WALLS,
184 TOTAL PIECES
Vp=116,318 CF

2/15/2022 REV.1

REVISIONS:

No.	DATE	DESCRIPTION

THE CONTENTS OF THESE DRAWINGS ARE THE PROPERTY OF PRECON PRODUCTS AND ARE PROPRIETARY AND CONFIDENTIAL. THESE DOCUMENTS SHALL NOT BE DISSEMINATED FOR ANY OTHER USE, WITHOUT THE WRITTEN CONSENT OF PRECON PRODUCTS. IF YOU RECEIVE THESE DRAWINGS IN ERROR, RETURN TO SENDER WITHOUT READING, COPYING OR DISCLOSING THE CONTENTS.

DO NOT SCALE

240 W. LOS ANGELESE AVE.
SIMI VALLEY, CA 93065
P: (805) 527-0841 F: (805) 584-0769,
WWW.PRE-CONPRODUCTS.COM

TITLE: STORMPRISM 14'-0" INFILTRATION SYSTEM BLACKHALL STUDIOS

DRAWN BY: K.STRADER

DATE: 2/15/2022

SHEET: 1 OF 13

LOCATION: T:\Drawings\Vault\DESIGNS\Storm Prism\Customer\Blackhall Studios\14ft Infiltration System Blackhall Studios.dwg

Precon Products™ Guide Specification

Storm Prism™ EQ
for
Infiltration Systems

Released 03/02/2021

SECTION 33 46 23 - MODULAR BURIED STORMWATER STORAGE UNITS

PART 1 - GENERAL

1.01 SECTION INCLUDES

A. Storm Prism™ EQ precast concrete, modular, buried stormwater storage units and accessories.

1.02 SUMMARY

A. This Section includes the performance criteria, materials, design, production, and installation for precast concrete, modular, buried, stormwater storage units that together form an underground stormwater storage system. The Work performed under this Section includes all labor, materials, equipment, related services, and supervision required for the supply, installation and commissioning of the precast concrete, modular, buried, stormwater storage units formed into an underground stormwater storage system.

1.03 RELATED SECTIONS

A. Section 01 33 00 - Submittal Procedures
B. Section 31 00 00 - Earthwork
C. Section 03 40 00 - Precast Concrete

1.04 REFERENCE STANDARDS

A. American Association of State Highway Transportation Officials (AASHTO)

1. AASHTO - Standard Specifications for Highway Bridges, 17th Edition - 2002
2. AASHTO M105 - Standard Specifications for Gray Iron Castings
3. AASHTO M198 - Standard Specification for Joints for Concrete Pipe, Manholes, and Precast Box Sections Using Preformed Flexible Joint Sealants
4. AASHTO M288 - Standard Specification for Geosynthetic Specification for Highway Applications

B. American Concrete Institute (ACI)

1. ACI 318 - Building Code Requirements for Structural Concrete
2. ACI 350 - Code Requirements for Environmental Engineering Concrete Structures
3. ACI 350.3 - Seismic Design of Liquid-Containing Structures and Commentary

C. American Society for Testing and Materials (ASTM)

1. ASTM A48 - Standard Specification for Gray Iron Castings
2. ASTM A615 - Standard Specification for Deformed & Plain Carbon-Steel Bars for Concrete Reinforcement
3. ASTM A1064 - Standard Specification for Carbon-Steel Wire and Welded Wire Reinforcement, Plain and Deformed, for Concrete
4. ASTM C32 - Standard Specification for Sewer and Manhole Brick (Made form Clay or Shale)
5. ASTM C33 - Standard Specification for Concrete Aggregates
6. ASTM C139 - Standard Specification for Concrete Masonry Units for Construction of Catch Basins and Manholes
7. ASTM C150 - Standard Specification for Portland Cement
8. ASTM C478 - Standard Specification for Circular Precast Reinforced Concrete Manhole Sections
9. ASTM C595 - Standard Specification for Blended Hydraulic Cement
10. ASTM C857 - Standard Practice for Minimum Structural Design Loading for Underground Precast Concrete Utility Structures
11. ASTM C858 - Standard Specification for Underground Precast Concrete Utility Structures
12. ASTM C877 - Standard Specification for External Sealing Bands for Concrete Pipe, Manholes, and Precast Box Sections
13. ASTM C891 - Standard Practice for Installation of Underground Precast Concrete Utility Structures
14. ASTM C913 - Standard Specification for Precast Concrete Water and Wastewater Structures
15. ASTM C923 - Standard Specification for Resilient Connectors Between Reinforced Concrete Manhole Structures, Pipes, and Laterals
16. ASTM C990 - Standard Specification for Joints for Concrete Pipe, Manholes, and Precast Box Sections Using Preformed Flexible Joint Sealants
17. ASTM C1107 - Packaged Dry, Hydraulic Cement Grout (Non-Shrink)
18. ASTM C1478 - Standard Specification for Storm Drain Resilient Connectors Between reinforced Concrete Storm Sewer Structures, Pipes, and Laterals
19. ASTM C1675 - Standard Specification for Installation of Precast Reinforced Concrete Monolithic Box Sections for Culverts, Storm Drains, and Sewers
20. ASTM D448 - Standard Classification for Sizes of Aggregate for Road and Bridge Construction
21. ASTM D698 - Test Methods for Laboratory Compaction Characteristics of Soil Using Standard Effort
22. ASTM D545 - Standard Test Method for Preformed Expansion Joint Fillers for Concrete Construction (Nonextruding Resilient Types)
23. ASTM D1751 - Standard Specification for Preformed Expansion Joint Filler for Concrete Paving and Structural Construction (Nonextruding and Resilient Bituminous Types)
24. ASTM D2487 - Standard Practice for Classification of Soils for Engineering Purposes (Unified Soil Classification System)
25. ASTM D4014 - Standard Specification for Plain and Steel-Laminated Elastomeric Bearings for Bridges
26. ASTM D5992 - Standard Guide for Dynamic Testing of Vulcanized Rubber and Rubber-Like Materials Using Vibratory Methods
27. ASTM D7957 - Standard Specification for Solid Round Glass Fiber Reinforced Polymer Bars for Concrete Reinforcement
28. ASTM D8139 - Standard Specification for Semi-Rigid, Closed-Cell Polypropylene Foam, Preformed Expansion Joint Fillers for Concrete Pacing and Structural Construction
29. ASTM E1745 - Standard Specification for Plastic Water Vapor Retarders Used in Contact with Soil or Granular Fill Under Concrete Slabs
30. ASTM F2510 - Standard Specification for Resilient Connectors Between Reinforced Concrete Manhole Structures and Corrugated Dual- and Triple-Wall Polyethylene and Polypropylene Pipes

1.05 PERFORMANCE REQUIREMENTS

A. Structural Performance: Provide an underground stormwater storage system capable of withstanding design loads as indicated on the Plans and as detailed herein:

1. Dead Loads shall be determined using the following:

i. Soil load based on minimum and maximum depth of burial as indicated on the Plans using a minimum of 120 pcf for soil density.
ii. Lateral soil pressures to be based on a minimum “At Rest Earth Pressure” of 60 pcf.
iii. Other dead loads as indicated on the Plans.

2. Live Loads shall be determined using the following:

i. HS20 Loading per AASHTO - Standard Specifications for Highway Bridges, 17th Edition - 2002 based on the minimum and maximum depth of burial as indicated on the Plans. For burial depths less than two feet, a concentrated point load shall be utilized for the calculated live load.

3. Interior Water Load shall be determined using the following:

i. A minimum of 62.4 pcf water density at the maximum water storage depth as indicated on the Plans.

4. Maximum Soil Bearing Pressure shall be evaluated using the following:

i. Soil bearing capacities as determined by the Project Geotechnical Engineer or as listed in the Project Geotechnical Report.
ii. The maximum bearing pressure of the selected precast module.

5. Seismic Loads shall be based on the Plans and Project Geotechnical Report.

6. Other Loads (if any) shall be determined using the following:

i. As detailed on the Plans and Drawings or otherwise listed in the Specifications.

B. Water Storage Capacity: Provide an underground stormwater storage system with a minimum water storage capacity as indicated on the Plans or as indicated in the Water Quality Management Plan (WQMP). The storage volume shall reflect any necessary freeboard. Water detention times and water release rates shall not deviate from the requirements listed in the WQMP.
C. System Footprint: Provide an underground stormwater storage system with a footprint size as detailed on the Plans. Any deviation from the system footprint must be reconciled with the project Plans and Project WQMP.

1.06 DESIGN REQUIREMENTS

A. Structural precast concrete, modular, buried, stormwater storage units shall be designed in accordance with ACI 350, ACI 350.3, and ACI 318 latest addition and the details listed herein;

1. Wall thickness, and top slab thickness of the stormwater storage units shall conform to ACI 350 and ACI 318 and shall be no less than the minimum thickness necessary to sustain HS20 loading requirements as determined by a Licensed Professional Engineer.
2. Wall thickness, top slab thickness and bottom slab thickness of the stormwater storage system shall be no less than the minimum thickness necessary to sustain the expected soil loading based on the required burial depths for the Project as determined by a Licensed Professional Engineer.
3. Wet mix concrete or self-consolidating concrete (SCC) with a water/cement ratio of no greater than 0.40 shall be utilized for all precast and any field cast elements. Dry cast concrete shall not be allowed in order to maintain dimensional tolerances and to ensure adequate consolidation around heavy reinforcement.
4. The interior assembled floor of the stormwater storage system shall be flat to within ½" and shall not slope greater than 1%.
5. All vertical load bearing elements shall contain transverse reinforcement per ACI 350 and ACI 318 to provide confinement and ensure that spalling of the shell concrete does not result in a loss of axial load strength.
6. Access shall be provided for manned entry into the system. The access point(s) for ingress and egress shall be located in the system in such a manner that a point of egress shall be visible at all times by entry personnel from any location within the system.
7. The stormwater storage system shall be designed with no internal ledges, steps, slopes, walls, or other form of blockage between any interior space and at least one egress opening that may encumber access or retrieval of personnel or equipment.
8. Areas within the stormwater storage system with ingress and egress restrictions resulting in a 30% reduction in size of the standard interior height and/or width of the system and any step-over that is 3-inches in size or larger shall be considered separate compartments of the system and should be minimized. Each separate compartment shall require unique surface level ingress and egress points for safe access and exit from the system as well as to provide adequate air supply during manned entry.
9. ***(Specifier Note: Include this Section for Infiltration systems requiring internal filtration.)*** Stormwater storage systems designed for infiltration shall utilize a material and method internal to the System to prevent sediment from entering the rock voids of the bedding for the system. The material and method shall be maintainable and shall not restrict the hydraulic characteristics of the storage system in a 90% clogged condition.

1.07 QUALITY ASSURANCE

A. The precast concrete, modular, buried, stormwater storage units shall be manufactured at a precast concrete facility certified by the NPCA.
B. The materials, methods and completed concrete, subsurface, stormwater storage system(s) shall be subject to inspection by the Engineer. Acceptance or rejection of the system shall be based on the Specifications contained in this Section.

1.08 SUBMITTALS

A. Submittals shall conform to Section 01 33 00 - Submittal Procedures.
B. Action Submittals

1. Shop Drawings

i. Detail fabrication and installation of structural precast concrete units including joint interface at member ends and to each adjoining members.
ii. Indicate locations, plan views, elevations, dimensions, shapes, and cross sections of each unit, openings, support conditions and types of reinforcement, including special reinforcement.
iii. Detail loose and cast-in hardware, lifting and erection inserts, connections, and interface surfaces.
iv. Indicate location and details of joint treatment.
v. Designate and provide details for all separate compartments (if any) within the stormwater storage system as described in Section 1.06-A.10.

2. Concrete Design Mixtures

i. Include a submittal for each concrete design mixture including compressive strength.

3. Water Storage Sizing

i. Include supporting data to confirm the stormwater storage system is sized with sufficient water storage capacity per the Plans and Water Quality Management Plan (WQMP).
ii. Alternate stormwater storage systems to any Specified system shall supply a continuous simulation hydrologic model that supports the system is sized with sufficient water storage capacity, conforms to the required draw-down time, and conforms to the maximum release rates and other pertinent design parameters as detailed on the Plans and in the WQMP. The model and results shall be reviewed and require Approval by the Reviewing Agency prior to acceptance of an alternate system.

C. Informational Submittals

1. Material Test Reports

i. Aggregates: Material test reports shall be from an accredited agency indicating and interpreting test results for compliance with Reference Standards and Specifications as detailed herein.
ii. Compressive Strength: Concrete compressive strength test results shall be supplied for each batch of concrete utilized in the production of the precast concrete, modular, buried, stormwater storage units.

2. Material Certifications: Material certifications shall be signed by the Manufacturers certifying that each of the following items comply with the Reference Standards and Specifications as detailed herein.

i. Cementitious materials.
ii. Reinforcing materials.
iii. Admixtures.
iv. Bearing pads.
v. Sealants.

3. Operations and Maintenance Manual.

4. Installation Verification: The installation of the subsurface, stormwater storage system shall be verified by a Licensed Professional Engineer and a certification provided indicating that the system has been constructed and is in substantial conformance with the Approved Plans and WQMP.

1.09 DELIVERY, STORAGE, AND HANDLING

A. Deliver all precast concrete members in such quantities and at such times to assure compliance with the agreed upon Project schedule and setting sequence to ensure continuity of installation.
B. Transport and handle members in a manner to avoid excessive stresses that could cause cracking or other damage.
C. Store members with adequate dunnage and bracing, and protect units to prevent contact with soil, staining, and to control cracking, distortion, warping or other physical damage.
D. Store members with dunnage across the full width of each bearing point unless otherwise Specified or shown on the Shop Drawings.
E. Place stored members so identification marks are clearly visible and units can be inspected.
F. Place dunnage of even thickness between each member.
G. Members may be stacked according to the manufacturer's recommendation.
H. Lift and support members only at designated points indicated on the Shop Drawings. Do not drag, slide or push members.
I. Accessories:
1. Accessory components shall be delivered in the manufacturer's original, unopened packaging and/or containers with labels that clearly identify the make, model and manufacturer.
2. Accessory components shall be stored in a clean, dry area out of direct sunlight.

PART 2 - PRODUCTS
2.01 MANUFACTURER

A. Precon Products
240 West Los Angeles Avenue
Simi Valley, California 93065
Phone: (800) 882-3399
Email: info@pre-conproducts.com
Website: www.preconproducts.com

2.02 MODULAR BURIED STORMWATER STORAGE UNITS

A. All material shall meet or exceed the applicable standards referenced in this Specification and shall conform to all federal, state, and local requirements.
B. Precast Concrete Members
1. (Specifier Note: Select the appropriate configuration and delete all other configurations. Edit the font to standard font when completed.)
- Storm Prism™ EQ Single Module with modular, precast concrete, orifice base for infiltration.
- Storm Prism™ EQ Single Module with modular, precast concrete, pad footing for infiltration.
- Storm Prism™ EQ Single Module with modular, precast concrete, beam footing for infiltration.
- Storm Prism™ EQ Double Module with orifice base for infiltration.

REVISIONS:
No. DATE DESCRIPTION

THE CONTENTS OF THESE DRAWINGS ARE THE PROPERTY OF PRECON PRODUCTS AND ARE PRORIETARY AND CONFIDENTIAL. THESE DOCUMENTS SHALL NOT BE DISSEMINATED TO ANY OTHER USE, WITHOUT THE WRITTEN CONSENT OF PRECON PRODUCTS. IF YOU RECEIVE THESE DRAWINGS IN ERROR, RETURN TO SENDER WITHOUT READING, COPYING OR DISCLOSING THE CONTENTS.

DO NOT SCALE

240 W. LOS ANGELESE AVE.
SIMI VALLEY, CA 93065
P: (805) 527-0841 F: (805) 584-0769,
WWW.PRE-CONPRODUCTS.COM

TITLE: NOTE
BLACKHALL STUDIOS

DRAWN BY: K.STRADER

DATE: 2/15/2022

SHEET: 2 OF 13

LOCATION:T:\Drawings\Vault\DESIGNS\Storm Prism\Customer\Blackhall Studios\14ft Infiltration System Blackhall Studios.dwg

1. Cement shall be Type II/V Portland cement conforming to ASTM C 150.
2. Aggregate shall conform to ASTM C33, except that the requirement for gradation shall not apply.
3. Reinforcement shall consist of steel bar conforming to ASTM A615, Grade 60/80, glass fiber reinforced polymer bars conforming to ASTM D7957, or mesh conforming to ASTM A1064, Grade 60/80.
4. All sections shall be cured by an approved method. Sections shall not be shipped until the concrete has attained full design strength as determined by an American Concrete Institute Certified Laboratory Technician - Level 2 but in no case shall the compressive strength be less than 2,000 psi.
5. Pipe openings shall be sized to accept pipes of the specified size(s) and material(s), and shall be sealed by the Contractor with hydraulic cement grout conforming to ASTM C1107 or sealed by use of a Resilient Connector conforming to ASTM C923, C1478, or F2510.
6. Access risers and any necessary associated grade adjustments shall conform to ASTM A478 for round access risers and ASTM C857, C858, or C913 for square/rectangular access risers and shall provide for an access opening with a minimum dimension of 48-inches.
7. Castings for manhole frames and covers shall be in accordance with ASTM A48, CL.30B and AASHTO M105. The access cover/s shall be designed for HS20-44 traffic loading and shall provide a minimum of 30-inch clear opening.
8. Brick or masonry used to level the manhole frames and covers to finished grade shall conform to ASTM C32 or ASTM C139 and shall be installed in conformance with all local requirements.

(Specifier Note: Section C. for Field Poured Concrete Slabs is only necessary for certain configurations of the modular, buried, stormwater storage system. Delete this Section if the Field Poured Concrete Slab is not to be utilized.)

B. Field Poured Concrete Slab

1. The dimensions of the slab shall be as detailed on the Plans.
2. Cement shall be Type II/V Portland cement conforming to ASTM C 150 or blended hydraulic cement conforming to ASTM C595.
3. Aggregate shall conform to ASTM C33, except that the requirement for gradation shall not apply.
4. Reinforcement shall consist of bar conforming to ASTM A615, Grade 60/80 or mesh conforming to ASTM A1064, Grade 60/80.
5. All sections shall be cured by an approved method. Vertical construction shall not begin until the concrete has attained full design strength as determined by a Licensed Professional Engineer but in no case shall the compressive strength be less than 2,000 psi.

C. Accessory Components

1. Spacer for use between concrete members shall be a ½" thick x 4" wide closed-cell polypropylene foam conforming to ASTM D8139, ASTM D1751, and ASTM D545.
2. Joint sealer to span between concrete member roofs shall be a polyolefin backed exterior joint wrap conforming to ASTM C877.

D. Bedding, Backfill and Final Fill

1. Bedding Material: The bedding material for the precast concrete, modular, buried, stormwater storage system shall be a clean, washed, poorly graded, free-draining, angular faced, crushed aggregate conforming to ASTM D448, classification size No. 6 or No. 67. The bedding material shall be a minimum of 6-inches deep and shall extend beyond the footprint of the stormwater storage system by a sufficient distance to ensure working room to properly and safely compact bedding and backfill materials but at no times shall the distance be less than 18-inches.
2. Backfill Material: Backfill material for the precast concrete, modular, buried, stormwater storage system shall be a clean, washed, poorly graded, free-draining, angular faced, crushed aggregate conforming to ASTM D448, classification size No. 6 or No. 67.
3. Final Fill: The final fill material shall conform to ASTM D2487 any classification except OL, CH, MH, OH, and PT provided the material can be adequately compacted with no adverse effects to the stormwater storage system.
4. If any bedding, backfill, or final fill material is selected to be a poorly graded (open graded) material, the material shall be separated by a non-woven geotextile conforming to AASHTO M228, Class 2.

PART 3 - EXECUTION

3.01 Earthwork

A. Excavation, trenching, and backfilling shall be as specified in Division 31 00 00 "Earthwork."

3.02 Identification

A. All precast concrete, modular, buried, stormwater storage systems shall be identified at the surface level with permanent, clearly visible markings indicating they are stormwater storage systems.

3.03 Inspection

A. General

1. Precast concrete members, accessories, and aggregate material used during installation shall be inspected prior to installation and any defective, damaged or non-conforming material shall be replaced.

B. Precast Concrete Members

1. Any precast concrete member with a fracture or continuous crack greater than 12-inches in length and 0.01 in width shall be rejected and replaced.
2. Any precast concrete member that has not reached the required design strength shall be rejected and replaced.
3. Any precast concrete member with indications of imperfections in mixing and/or molding, honeycombed, or open textured surface, shall be rejected and replaced.
4. Any precast concrete member with indications of substantial patches or repairs shall be rejected and replaced.
5. Any precast concrete member with exposed reinforcing steel shall be rejected and replaced.

(Specifier Note: This Section for Field Poured Concrete Slabs is only necessary for certain configurations of the modular, buried, stormwater storage system. Delete this Section if the Field Poured Concrete Slab is not to be utilized.)

C. Field Poured Concrete Slab

1. Any field poured concrete with a fracture or continuous crack greater than 12-inches length and 0.01 in width shall be rejected and re-poured.
2. Any field poured concrete that has not reached the required design strength shall be rejected and re-poured.
3. Any field poured concrete with indications of imperfections in mixing and/or molding, honeycombed, or open textured surface, shall be rejected and re-poured.
4. Any field poured concrete with indications of substantial patches or repairs shall be rejected and re-poured.
5. Any field poured concrete with exposed reinforcing steel shall be rejected and re-poured.

3.04 Stormwater Storage System Installation

A. General

1. General Locations and Arrangements: Plans and Shop Drawings shall indicate the general location and arrangement of the stormwater storage system. Installation shall conform to ASTM C891. Where specific installation procedures are not indicated in this Referenced Specification or the Plans, follow the product manufacturer's written instructions.

2. All precast concrete members shall be inspected for defects and cracks before being lowered into the trench. Any defective, damaged or unsound structure or any product that has had its grade disturbed after laying shall be taken up and replaced. The interior of the treatment system shall be free from dirt, excess water and other foreign materials as the installation progresses and left clean at the completion of the installation.

3.05 Excavation

A. Excavation

1. Excavate the pit to ensure that sides will be stable under all working conditions. Slope trench walls or provide supports in conformance with all federal, state, and local safety standards. Excavate only as much as can be safely maintained by available equipment.
2. Where excavation walls are stable or supported, provide a width sufficient, but no greater than necessary, to ensure working room to properly and safely place and compact embedment materials. The space between the stormwater storage system and excavation wall must be wider than the compaction equipment used in the compaction area.

B. Dewatering

1. Do not lay or embed any precast concrete member in standing or running water. Surface runoff shall be prevented from entering the excavation at all times.
2. When water is present in the work area, dewater to maintain stability of in-situ and imported materials. Maintain water level below the stormwater storage system bedding and foundation to provide a stable excavation bottom. Use, as appropriate, sump pumps, well points, deep wells, geofabrics, perforated underdrains, or stone blankets of sufficient thickness to remove and control water in the excavation. When excavating while depressing ground water, ensure the ground water is below the bottom of cut at all times to prevent washout from behind sheeting or sloughing of exposed excavation walls. Maintain control of water in the excavation before, during, and after the stormwater storage system installation and until embedment is installed and sufficient backfill has been placed to prevent flotation of the system, attached piping or accessory drainage structures.

C. Removal of Rock

1. Rock in either ledge or boulder formation shall be replaced with suitable materials to provide a compacted earth cushion having a thickness between exposed rock and the stormwater storage system of at least 12 inches.

D. Removal of Unstable Material

1. Where wet or otherwise unstable soil incapable of properly supporting the stormwater storage system, as determined by the Engineer, is encountered in the bottom of an excavation, such material shall be removed to at least 24 inches below bottom of the system and replaced to the proper grade with select granular material, compacted as directed by the Engineer. When removal of unstable material is due to the fault or neglect of the Contractor while performing shoring and sheeting, water removal, or other specified requirements, such removal and replacement shall be performed at no additional cost to the Owner.

3.06 Bedding

A. A stable and uniform bedding shall be provided for the stormwater storage system and any protruding features. The bedding shall be compacted to a minimum of 90% of maximum density per AASHTO T99, or as shown in the Plans. Structure bedding shall be a minimum of 6" in thickness. The bedding surface shall provide a firm foundation of uniform density throughout the entire footprint of the system.

3.07 Placing Precast Concrete Members

A. Each precast concrete member shall be thoroughly examined before being placed; defective or damaged members shall not be used. Precast concrete members shall be placed to within ± ¾" of the elevations as indicated on the Plans. Proper equipment shall be provided for lowering and setting precast concrete members into the excavation. Precast concrete members shall not be laid in water, and the members shall not be laid when trench conditions or weather are unsuitable for such work. Diversion of drainage or dewatering of excavations shall be provided as directed by the Engineer; see dewatering section.
B. Precast concrete members shall receive a ½" thick x 4" wide closed-cell polypropylene foam conforming to ASTM D8139, ASTM D1751, and ASTM D545 on all sides that will abut an adjacent member. The foam member shall remain in place to ensure proper alignment.
C. Precast concrete members shall be placed and aligned to within 1-1/4" of each other horizontally and vertically. The Engineer should be consulted for a course of action when joint gaps exceed 1-1/4".
D. Precast members transferring vertical loads to other members or slabs shall use a random oriented fiber bearing pad conforming to ASTM D4014 and ASTM D5992 between members with a minimum bearing surface area of 18 square-inches.
E. Minor mis-alignment of upper sections on slab or upper sections on other members may be adjusted through shimming using random oriented fiber pads conforming to the ASTM D4014 and ASTM D5992 provided the minimum bearing surface area from Section 3.07-D. is maintained.

3.08 Jointing/Sealing

A. Joints on the exterior top and side surface shall be sealed using a polyolefin backed exterior joint wrap conforming to ASTM C877. The joint wrap shall span the joint by a minimum of 4-inches on either side of the joint.
B. All sealed joints shall be protected from damage during placement of additional members and during final backfill. Damage during construction shall require re-sealing of the joints.

3.09 Backfilling

A. General

1. Backfill placement and compaction shall be constructed in accordance with the Specifications herein and the product manufacturer's published installation guides.

B. Backfilling Stormwater Storage System in Excavation

1. After the precast concrete member and accessory drainage connections have been properly bedded, select material from excavation or borrow, at a moisture content that will facilitate compaction, shall be placed along all sides of the system in layer depths to ensure minimum compaction density is obtained evenly throughout the backfill material. The backfill shall be brought up evenly on all sides of the structure. Each layer shall be thoroughly compacted with mechanical tampers or rammers. Tests for density shall be made as necessary to ensure conformance to the compaction requirements as Specified in the Geotechnical Report. Where it is necessary, in the opinion of the Engineer, that sheeting or portions of bracing used be left in place, the contract will be adjusted accordingly. Untreated sheeting shall not be left in place beneath structures or pavements.

C. Movement of Construction Machinery

1. Movement of construction machinery over a stormwater storage system at any stage of construction shall be at the Contractor's risk. Any damaged member shall be removed and replaced. Any equipment used during any stage of construction shall have a loading no greater than HS20 per AASHTO - Standard Specifications for Highway Bridges, 17th Edition - 2002. Permissible equipment shall not be permitted to operate over top of the system with less than 12-inches of structural cover.

END OF SECTION 33 46 23

REVISIONS:

No.	DATE	DESCRIPTION

THE CONTENTS OF THESE DRAWINGS ARE THE PROPERTY OF PRECON PRODUCTS AND ARE PROPRIETARY AND CONFIDENTIAL. THESE DOCUMENTS SHALL NOT BE DISSEMINATED FOR ANY OTHER USE, WITHOUT THE WRITTEN CONSENT OF PRECON PRODUCTS. IF YOU RECEIVE THESE DRAWINGS IN ERROR, RETURN TO SENDER WITHOUT READING, COPYING OR DISCLOSING THE CONTENTS.

DO NOT SCALE

240 W. LOS ANGELESE AVE.
SIMI VALLEY, CA 93065
P: (805) 527-0841 F: (805) 584-0769,
WWW.PRE-CONPRODUCTS.COM

TITLE: NOTES
BLACKHALL STUDIOS

DRAWN BY: K.STRADER

DATE: 2/15/2022

SHEET: 3 OF 13

LOCATION: T:\Drawings\Vault\DESIGNS\Storm Prism\Customer\Blackhall Studios\14ft Infiltration System Blackhall Studios.dwg

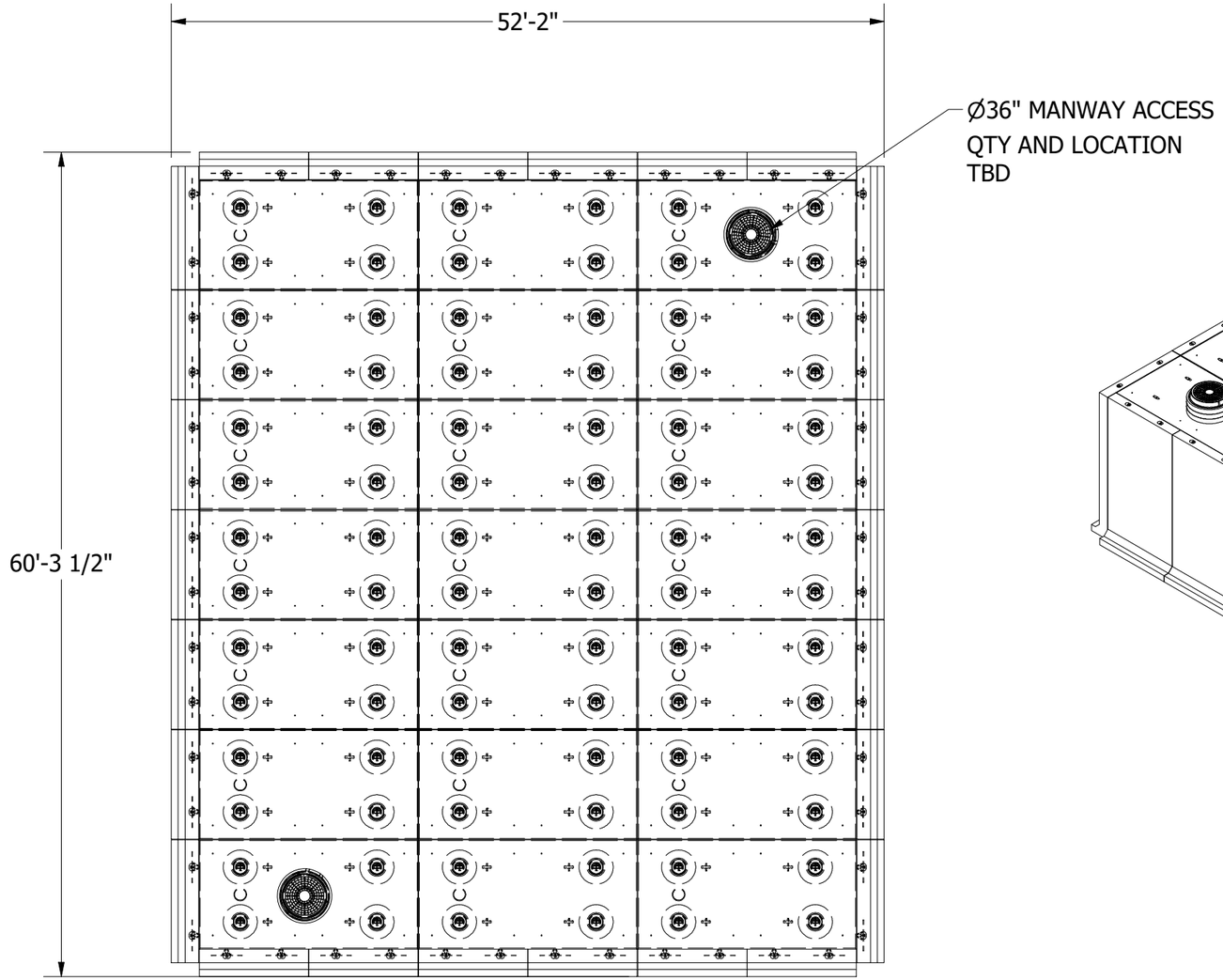

PLAN VIEW

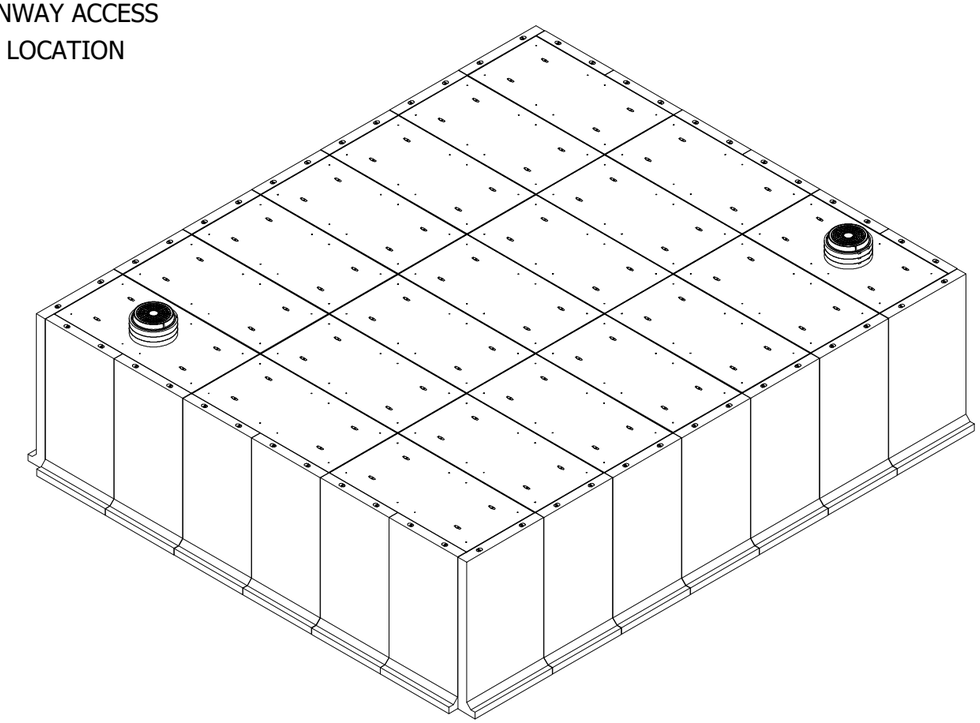

ISOMETRIC VIEW

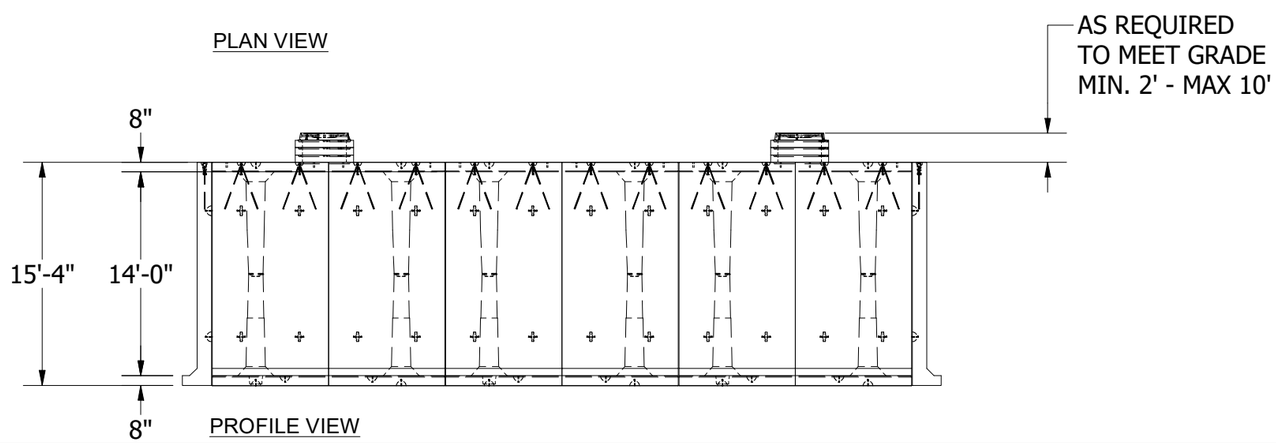

PROFILE VIEW

INLETs, OUTLETs AND MANWAY ACCESS LOCATION AND SIZE TBD	SUMMARY		
	DESCRIPTION	QTY	APPROX. WEIGHT
	WALLS 8'Wx 15'-4" T	22	19,300 LBS
	WALLS 9'Wx 15'-4'T	4	21,700 LBS
	EQ 7' TOPS	21	18,000 LBS
	EQ 7' BASE	21	18,100 LBS

REVISIONS:

No.	DATE	DESCRIPTION

THE CONTENTS OF THESE DRAWINGS ARE THE PROPERTY OF PRECON PRODUCTS AND ARE PRORIETARY AND CONFIDENTIAL. THESE DOCUMENTS SHALL NOT BE DISSEMINATED TO ANY OTHER USE, WITHOUT THE WRITTEN CONSENT OF PRECON PRODUCTS. IF YOU RECEIVE THESE DRAWINGS IN ERROR, RETURN TO SENDER WITHOUT READING, COPYING OR DISCLOSING THE CONTENTS.

DO NOT SCALE

240 W. LOS ANGELESE AVE.
SIMI VALLEY, CA 93065
P: (805) 527-0841 F: (805) 584-0769,
WWW.PRE-CONPRODUCTS.COM

TITLE: NORTH EQ SYSTEM OVERVIEW BLACKHALL STUDIOS

DRAWN BY: K.STRADER

DATE: 2/15/2022

SHEET: 4 OF 13

LOCATION: T:\Drawings\Vault\DESIGNS\Storm Prism\Customer\Blackhall Studios\14ft Infiltration System Blackhall Studios.dwg

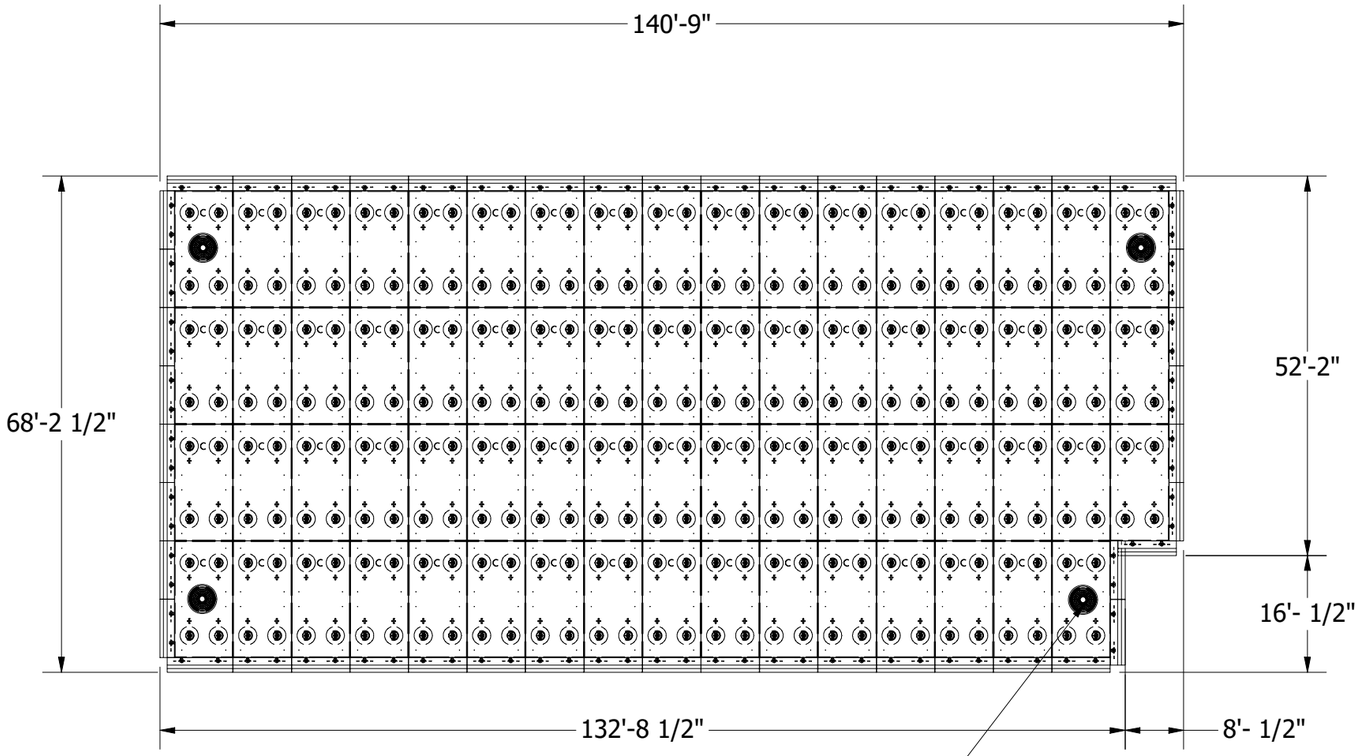

PLAN VIEW

Ø36" MANWAY ACCESS
QTY AND LOCATION
TBD

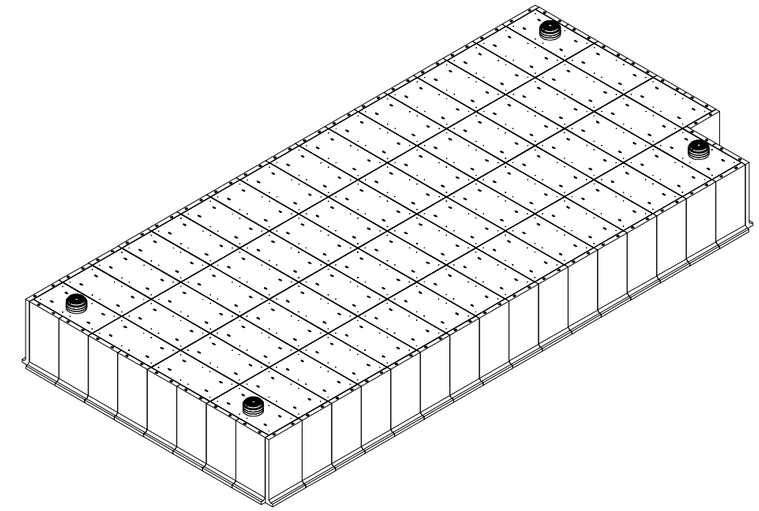

ISOMETRIC VIEW

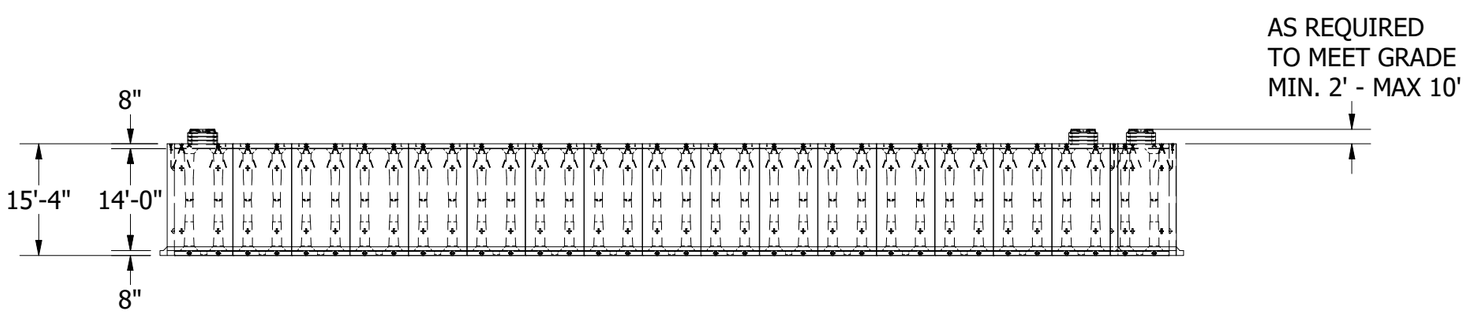

PROFILE VIEW

INLETs, OUTLETs AND MANWAY ACCESS
LOCATION AND SIZE TBD

SUMMARY

DESCRIPTION	QTY	APPROX. WEIGHT
WALLS 8'Wx 15'-4" T	45	19,300 LBS
WALLS 9'Wx 15'-4'T	5	21,700 LBS
EQ 7' TOPS	67	18,000 LBS
EQ 7' BASE	67	18,100 LBS

REVISIONS:

No.	DATE	DESCRIPTION

THE CONTENTS OF THESE DRAWINGS ARE THE PROPERTY OF PRECON PRODUCTS AND ARE PRORIETARY AND CONFIDENTIAL. THESE DOCUMENTS SHALL NOT BE DISSEMINATED FOR ANY OTHER USE, WITHOUT THE WRITTEN CONSENT OF PRECON PRODUCTS. IF YOU RECEIVE THESE DRAWINGS IN ERROR, RETURN TO SENDER WITHOUT READING, COPYING OR DISCLOSING THE CONTENTS.

DO NOT SCALE

240 W. LOS ANGELESE AVE.
SIMI VALLEY, CA 93065
P: (805) 527-0841 F: (805) 584-0769,
WWW.PRE-CONPRODUCTS.COM

TITLE:
SOUTH EQ SYSTEM
OVERVIEW
BLACKHALL STUDIOS

DRAWN BY: K.STRADER

DATE: 2/15/2022

SHEET: 5 OF 13

LOCATION:T:\Drawings\Vault\DESIGNS\Storm Prism\Customer\Blackhall Studios\14ft Infiltration System Blackhall Studios.dwg

14'-0" UNIT DETAIL

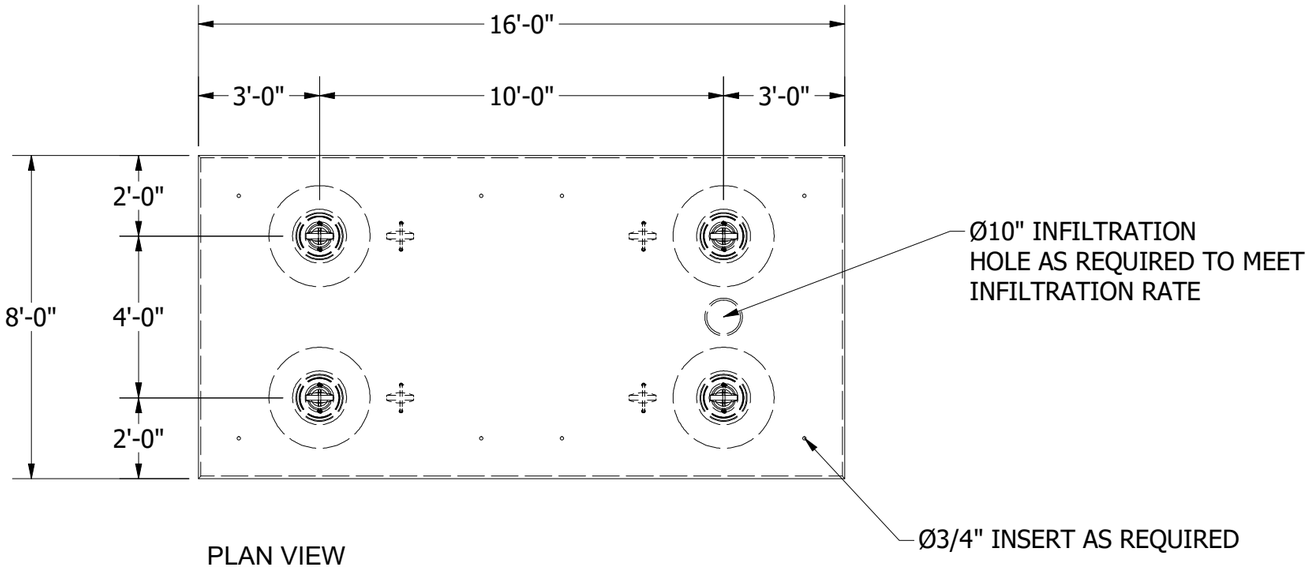

PLAN VIEW

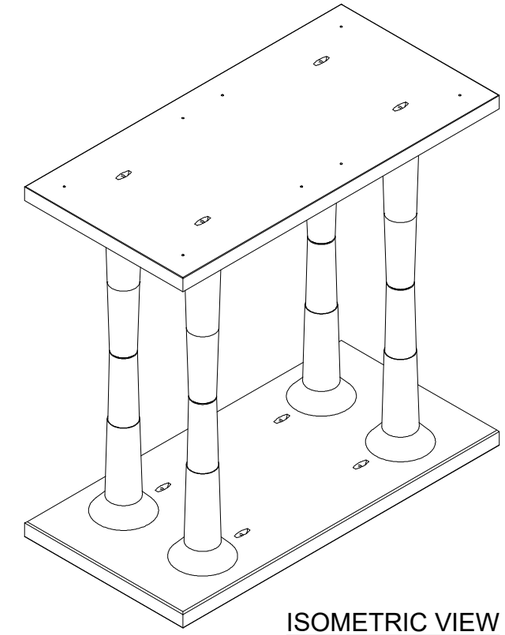

ISOMETRIC VIEW

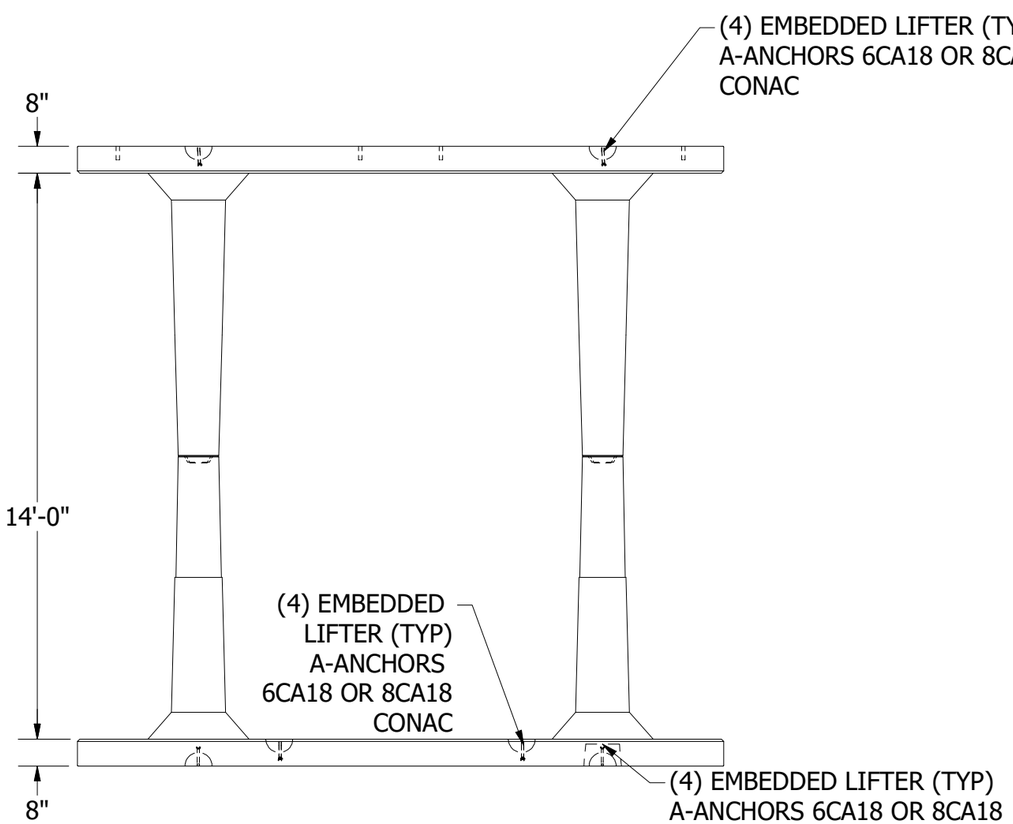

PROFILE VIEW

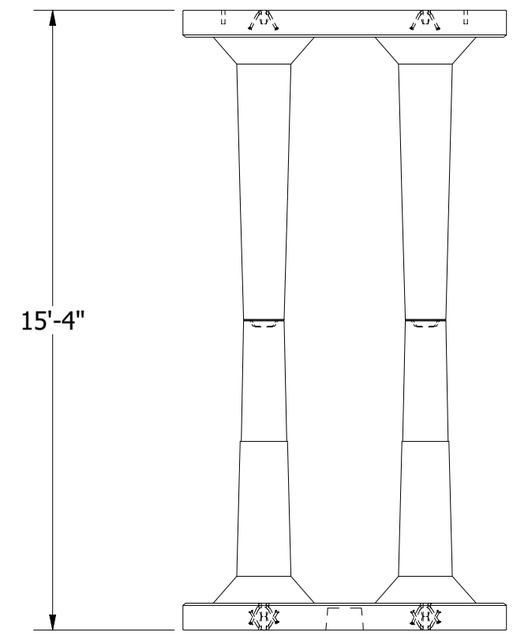

END VIEW

REVISIONS:

No.	DATE	DESCRIPTION

THE CONTENTS OF THESE DRAWINGS ARE THE PROPERTY OF PRECON PRODUCTS AND ARE PRORIETARY AND CONFIDENTIAL. THESE DOCUMENTS SHALL NOT BE DISSEMINATED FOR ANY OTHER USE, WITHOUT THE WRITTEN CONSENT OF PRECON PRODUCTS. IF YOU RECEIVE THESE DRAWINGS IN ERROR, RETURN TO SENDER WITHOUT READING, COPYING OR DISCLOSING THE CONTENTS.

DO NOT SCALE

240 W. LOS ANGELESE AVE.
SIMI VALLEY, CA 93065
P: (805) 527-0841 F: (805) 584-0769,
WWW.PRE-CONPRODUCTS.COM

TITLE: STORMPRISM 14'-0" INFILTRATION UNIT BLACKHALL STUDIOS

DRAWN BY: K.STRADER

DATE: 2/15/2022

SHEET: 6 OF 13

LOCATION:T:\Drawings\Vault\DESIGNS\Storm Prism\Customer\Blackhall Studios\14ft Infiltration System Blackhall Studios.dwg

STANDARD 14'-0" INFILTRATION BASE

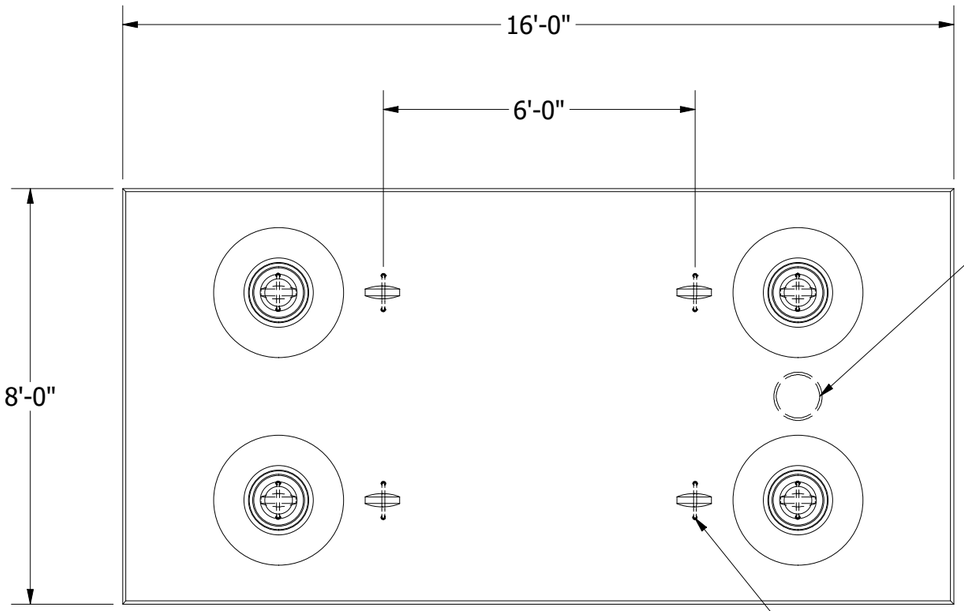

PLAN VIEW

Ø10" INFILTRATION HOLE AS REQUIRED TO MEET INFILTRATION RATE

(8) EMBEDDED LIFTER (TYP.) A-ANCHORS 6CA18 CONAC

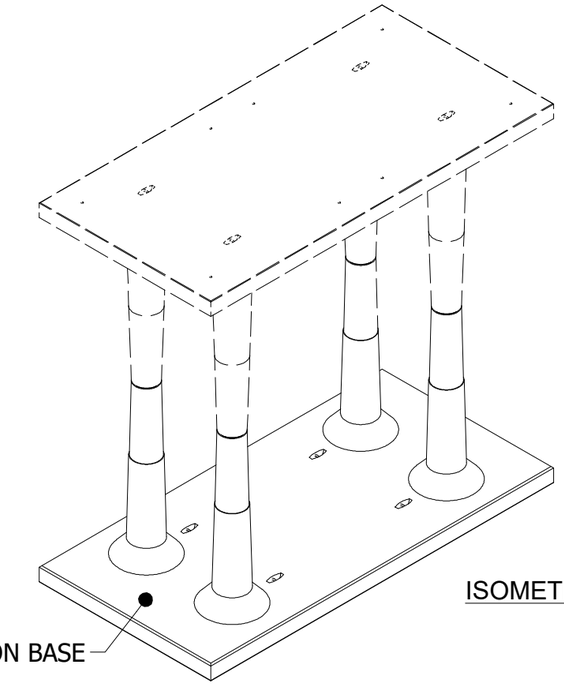

ISOMETRIC VIEW

STANDARD 14'-0" INFILTRATION BASE

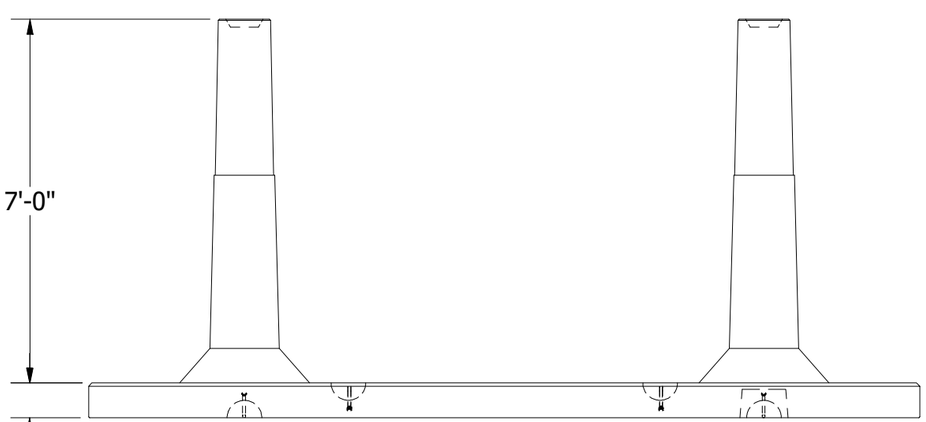

PROFILE VIEW

PART INFORMATION	
DESCRIPTION	APPROX. WEIGHT IN LBS
EQ 14'-0" BASE	17,900 LBS

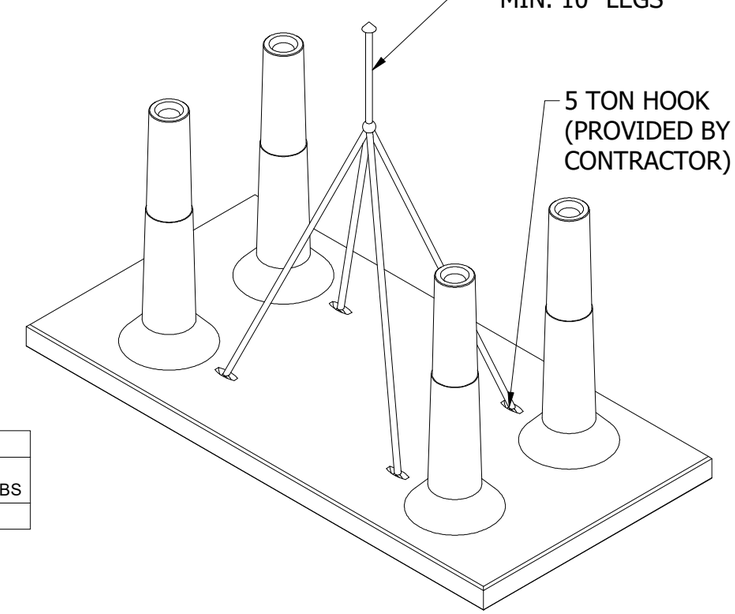

4-WAY SLING WITH MIN. 10" LEGS

5 TON HOOK (PROVIDED BY CONTRACTOR)

LIFTING DETAIL

REVISIONS:

No.	DATE	DESCRIPTION

THE CONTENTS OF THESE DRAWINGS ARE THE PROPERTY OF PRECON PRODUCTS AND ARE PROPRIETARY AND CONFIDENTIAL. THESE DOCUMENTS SHALL NOT BE DISSEMINATED FOR ANY OTHER USE, WITHOUT THE WRITTEN CONSENT OF PRECON PRODUCTS. IF YOU RECEIVE THESE DRAWINGS IN ERROR, RETURN TO SENDER WITHOUT READING, COPYING OR DISCLOSING THE CONTENTS.

DO NOT SCALE

240 W. LOS ANGELESE AVE.
SIMI VALLEY, CA 93065
P: (805) 527-0841 F: (805) 584-0769,
WWW.PRE-CONPRODUCTS.COM

TITLE: STORMPRISM 14'-0" INFILTRATION BASE BLACKHALL STUDIOS

DRAWN BY: K.STRADER

DATE: 2/15/2022

SHEET: 7 OF 13

LOCATION:T:\Drawings\Vault\DESIGNS\Storm Prism\Customer\Blackhall Studios\14ft Infiltration System Blackhall Studios.dwg

STANDARD 14'-0" INFILTRATION TOP

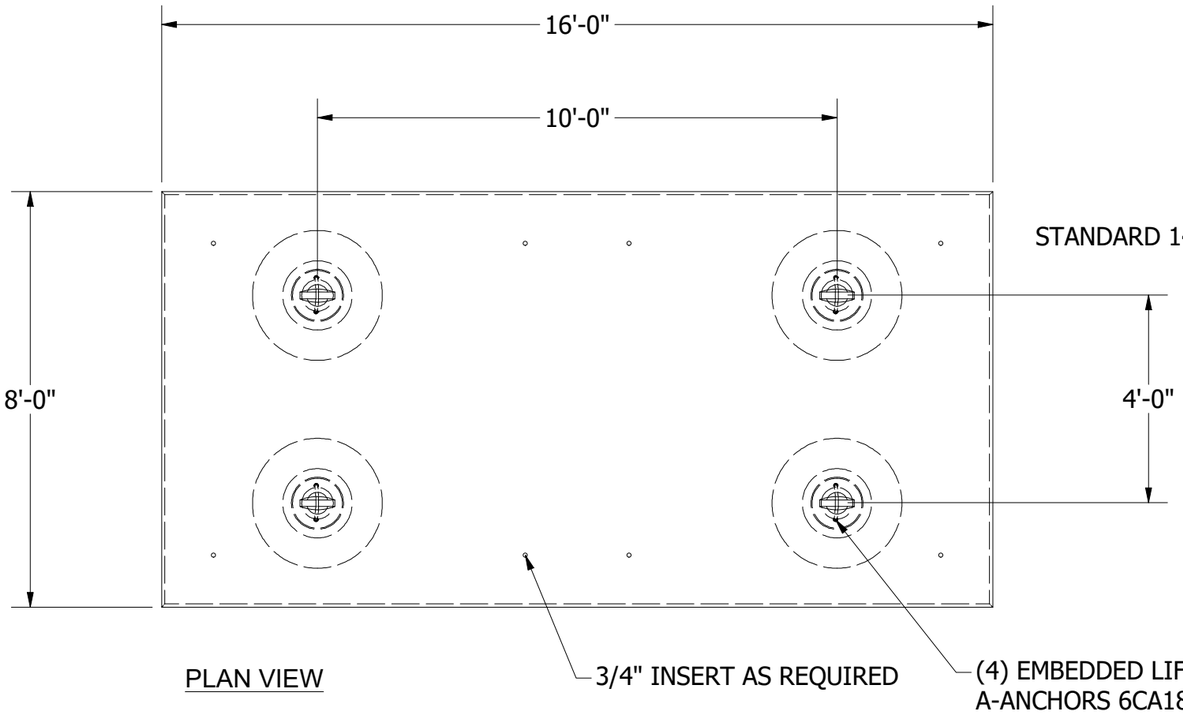

PLAN VIEW

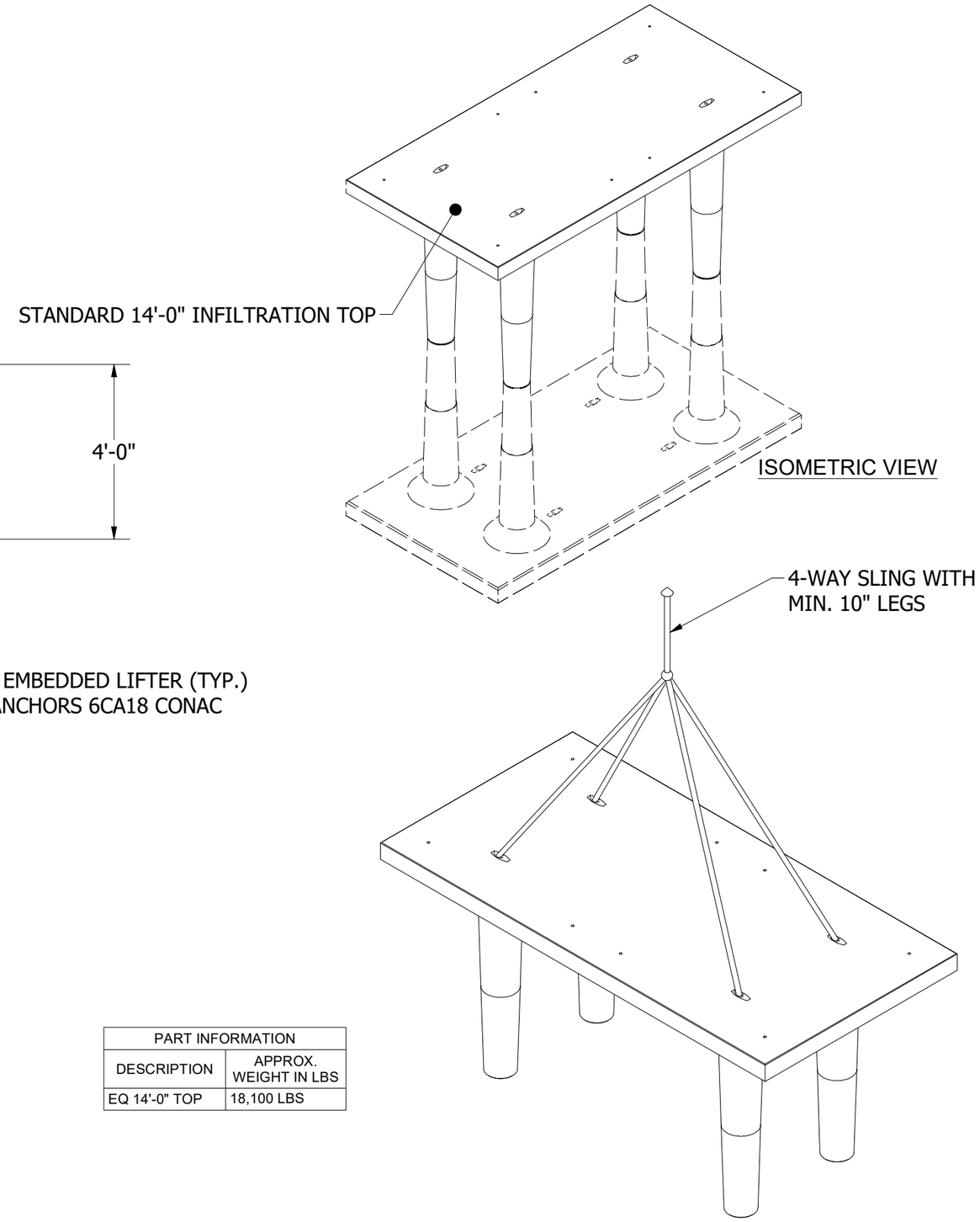

ISOMETRIC VIEW

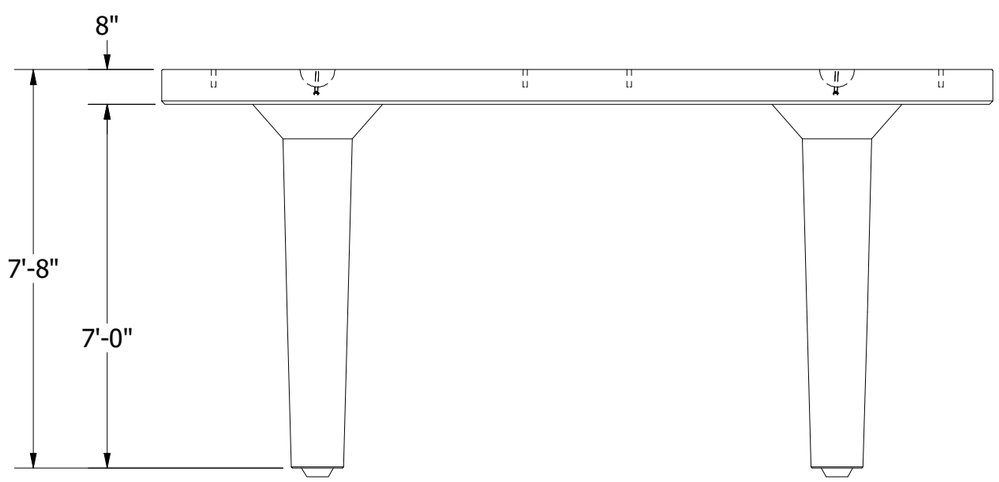

PROFILE VIEW

PART INFORMATION	
DESCRIPTION	APPROX. WEIGHT IN LBS
EQ 14'-0" TOP	18,100 LBS

LIFTING DETAIL

REVISIONS:

No.	DATE	DESCRIPTION

THE CONTENTS OF THESE DRAWINGS ARE THE PROPERTY OF PRECON PRODUCTS AND ARE PRORIETARY AND CONFIDENTIAL. THESE DOCUMENTS SHALL NOT BE DISSEMINATED FOR ANY OTHER USE, WITHOUT THE WRITTEN CONSENT OF PRECON PRODUCTS. IF YOU RECEIVE THESE DRAWINGS IN ERROR, RETURN TO SENDER WITHOUT READING, COPYING OR DISCLOSING THE CONTENTS.

DO NOT SCALE

240 W. LOS ANGELESE AVE.
SIMI VALLEY, CA 93065
P: (805) 527-0841 F: (805) 584-0769,
WWW.PRE-CONPRODUCTS.COM

TITLE:
STORMPRISM
14'-0" INFILTRATION TOP
BLACKHALL STUDIOS

DRAWN BY: K.STRADER

DATE: 2/15/2022

SHEET: 8 OF 13

LOCATION: T:\Drawings\Vault\DESIGNS\Storm Prism\Customer\Blackhall Studios\14ft Infiltration System Blackhall Studios.dwg

FILTER INFORMATION

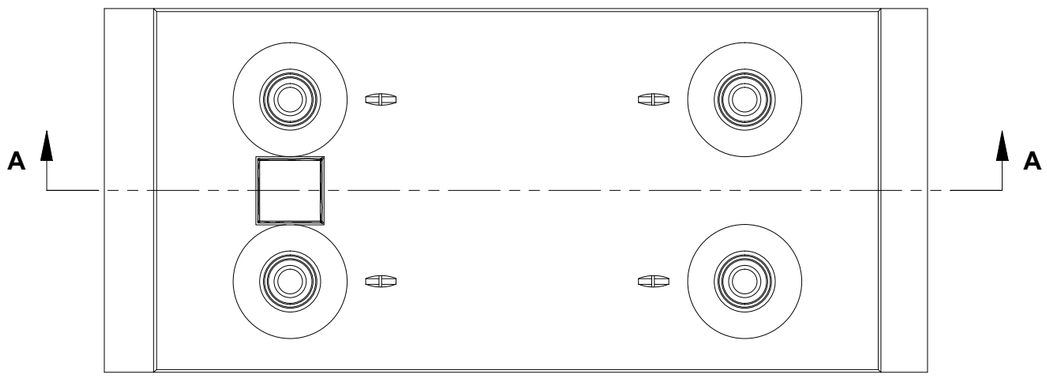

PLAN VIEW OF BASE ONLY

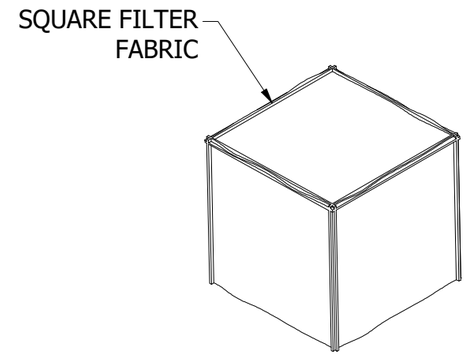

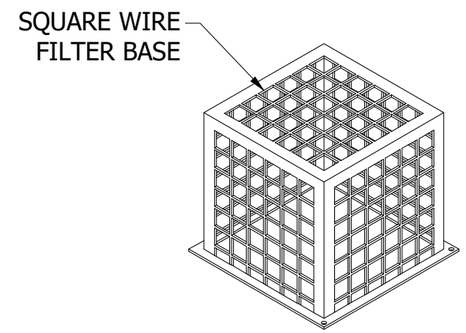

FILTER

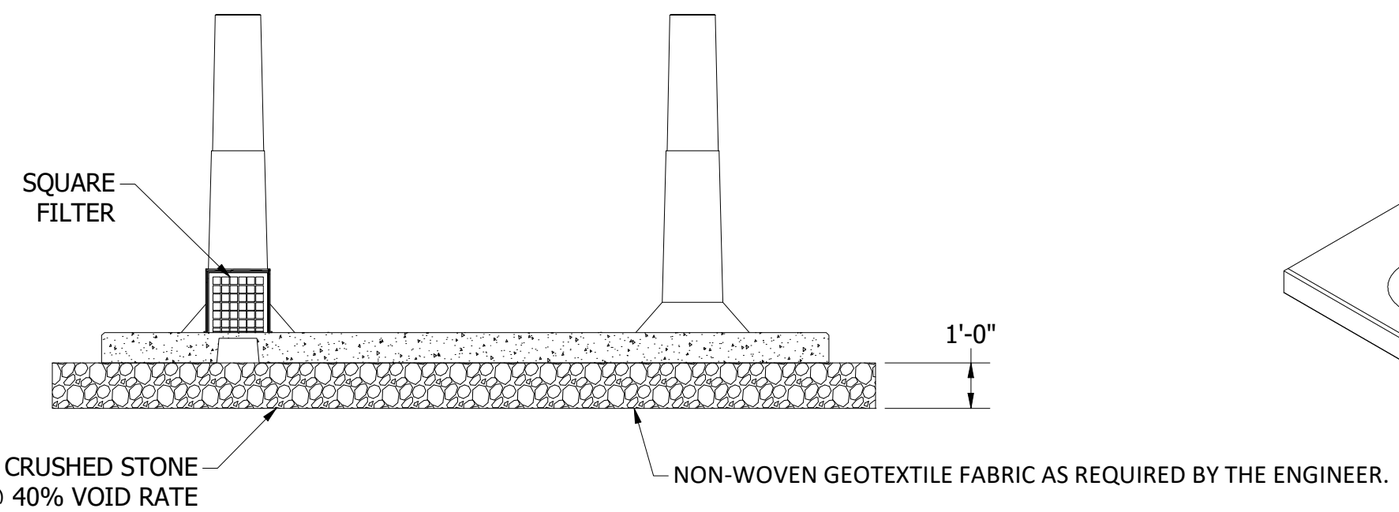

SECTION A-A

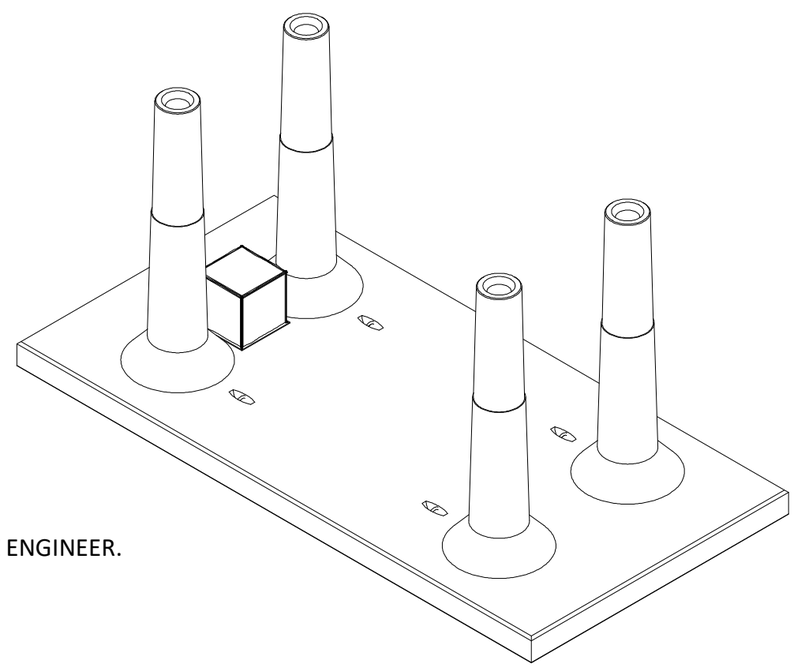

REVISIONS:

No.	DATE	DESCRIPTION

THE CONTENTS OF THESE DRAWINGS ARE THE PROPERTY OF PRECON PRODUCTS AND ARE PROPRIETARY AND CONFIDENTIAL. THESE DOCUMENTS SHALL NOT BE DISSEMINATED FOR ANY OTHER USE, WITHOUT THE WRITTEN CONSENT OF PRECON PRODUCTS. IF YOU RECEIVE THESE DRAWINGS IN ERROR, RETURN TO SENDER WITHOUT READING, COPYING OR DISCLOSING THE CONTENTS.

DO NOT SCALE

240 W. LOS ANGELESE AVE.
SIMI VALLEY, CA 93065
P: (805) 527-0841 F: (805) 584-0769,
WWW.PRE-CONPRODUCTS.COM

TITLE: STORMPRISM INFILTRATION FILTER INFORMATION

DRAWN BY: K.STRADER

DATE: 2/15/2022

SHEET: 9 OF 13

LOCATION:T:\Drawings\Vault\DESIGNS\Storm Prism\Customer\Blackhall Studios\14ft Infiltration System Blackhall Studios.dwg

STANDARD 15'-4" WALL

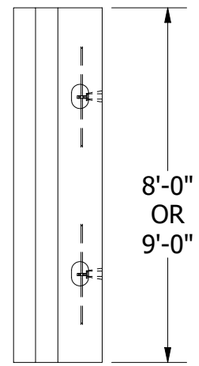

PART INFORMATION	
DESCRIPTION	APPROX. WEIGHT IN LBS
INTERNAL WALLS 8'Wx 15'-4" T	19,300 LBS
INTERNAL WALLS 9'Wx 15'-4" T	21,700 LBS

PLAN VIEW

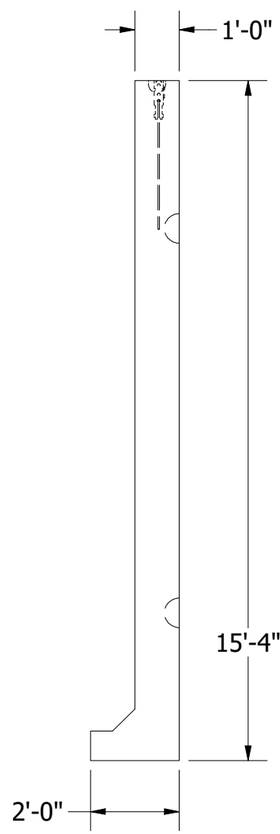

PROFILE VIEW

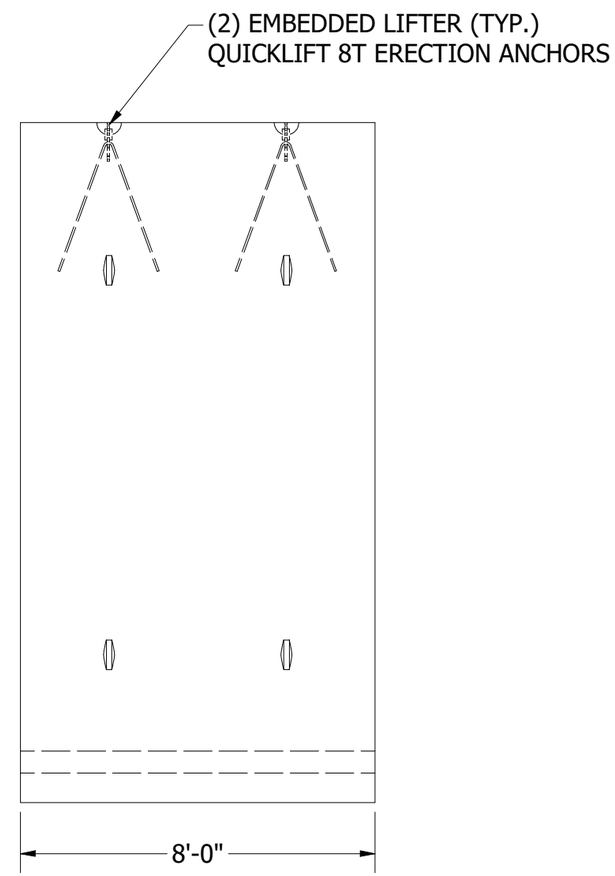

SIDE VIEW

REVISIONS:

No.	DATE	DESCRIPTION

THE CONTENTS OF THESE DRAWINGS ARE THE PROPERTY OF PRECON PRODUCTS AND ARE PROPRIETARY AND CONFIDENTIAL. THESE DOCUMENTS SHALL NOT BE DISSEMINATED FOR ANY OTHER USE, WITHOUT THE WRITTEN CONSENT OF PRECON PRODUCTS. IF YOU RECEIVE THESE DRAWINGS IN ERROR, RETURN TO SENDER WITHOUT READING, COPYING OR DISCLOSING THE CONTENTS.

DO NOT SCALE

240 W. LOS ANGELESE AVE.
SIMI VALLEY, CA 93065
P: (805) 527-0841 F: (805) 584-0769,
WWW.PRE-CONPRODUCTS.COM

TITLE:
STORMPRISM INFILTRATION SYSTEM
STANDARD 15'-4" WALL DETAIL

DRAWN BY: K.STRADER

DATE: 2/15/2022

SHEET: 10 OF 13

LOCATION:T:\Drawings\Vault\DESIGNS\Storm Prism\Customer\Blackhall Studios\14ft Infiltration System Blackhall Studios.dwg

OPTIONAL MANWAY ACCESS LOCATIONS

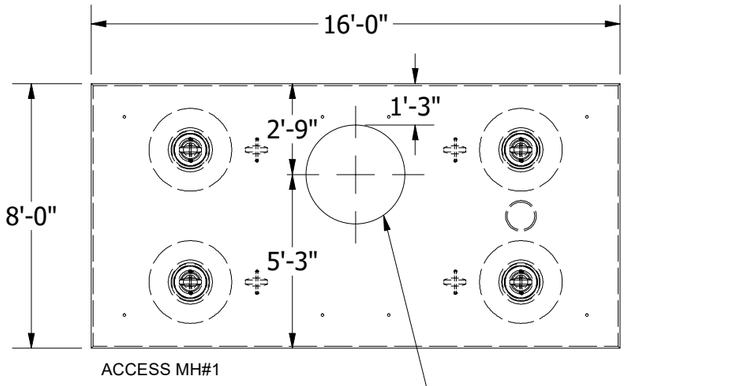

ACCESS MH#1

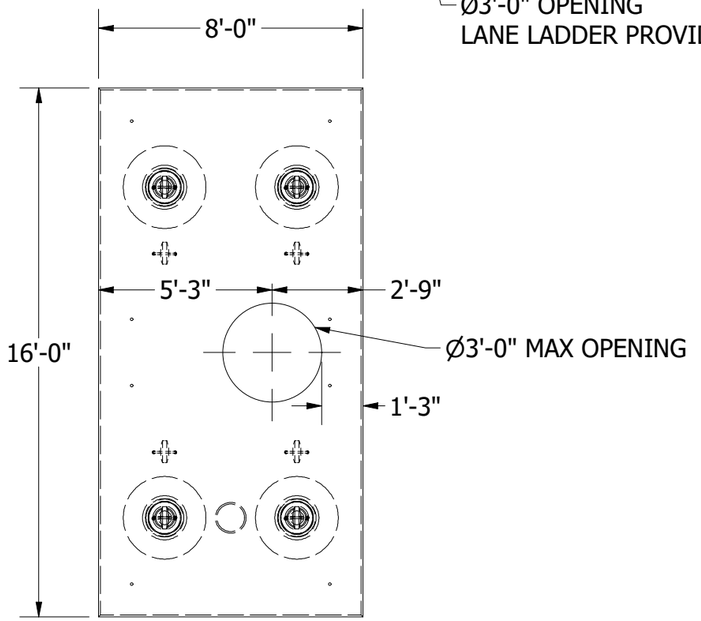

ACCESS MH#2

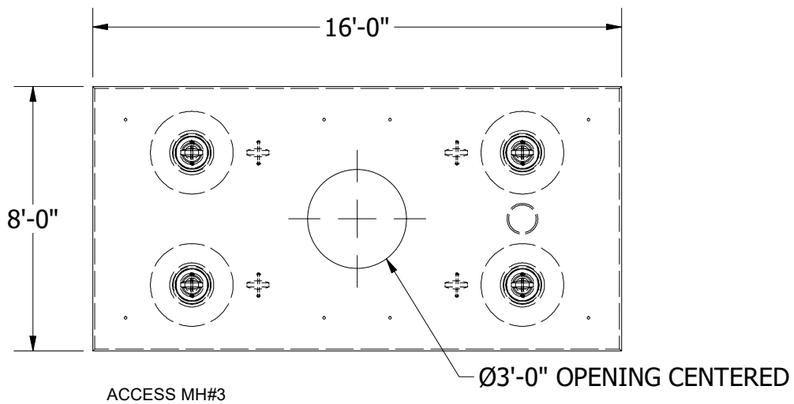

ACCESS MH#3

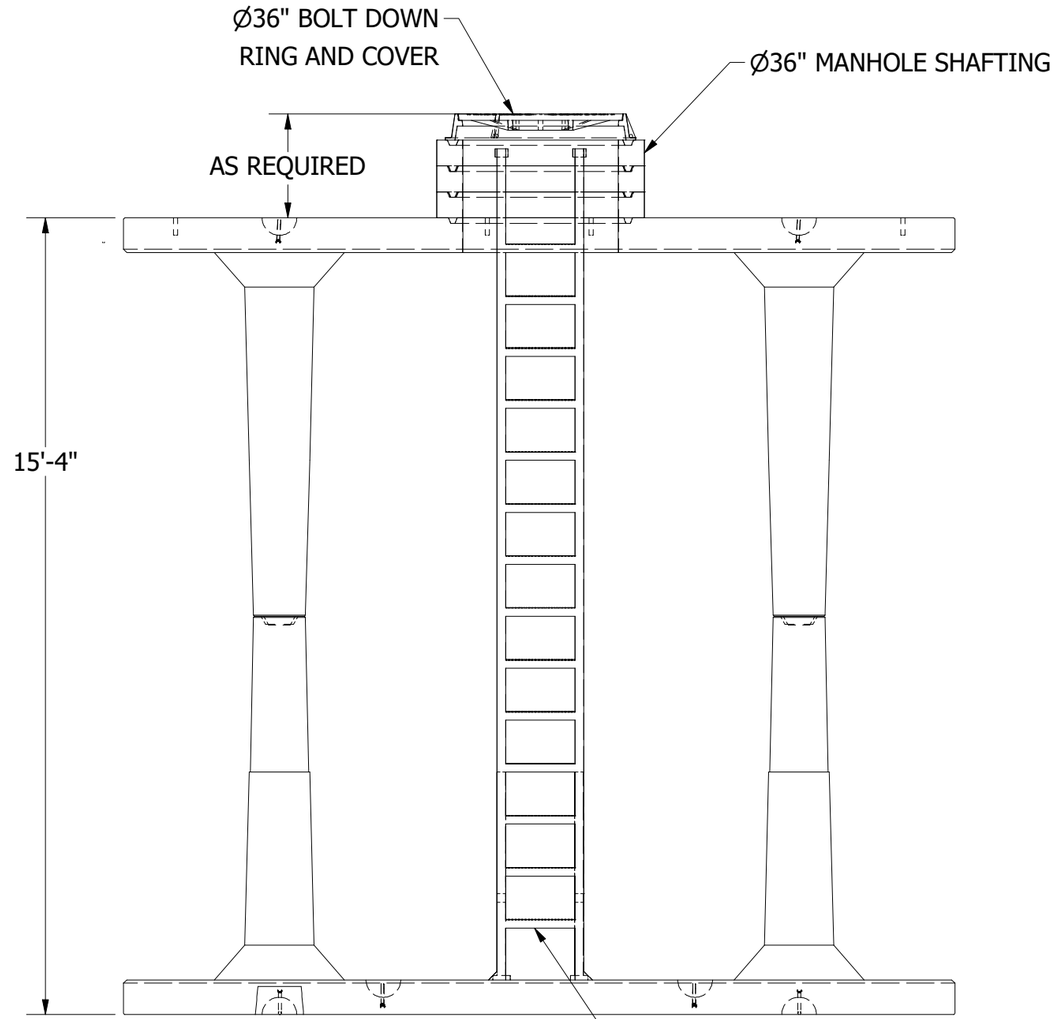

LADDER DETAIL

REVISIONS:

No.	DATE	DESCRIPTION

THE CONTENTS OF THESE DRAWINGS ARE THE PROPERTY OF PRECON PRODUCTS AND ARE PROPRIETARY AND CONFIDENTIAL. THESE DOCUMENTS SHALL NOT BE DISSEMINATED FOR ANY OTHER USE, WITHOUT THE WRITTEN CONSENT OF PRECON PRODUCTS. IF YOU RECEIVE THESE DRAWINGS IN ERROR, RETURN TO SENDER WITHOUT READING, COPYING OR DISCLOSING THE CONTENTS.

DO NOT SCALE

240 W. LOS ANGELESE AVE.
SIMI VALLEY, CA 93065
P: (805) 527-0841 F: (805) 584-0769,
WWW.PRE-CONPRODUCTS.COM

TITLE: STORMPRISM INFILTRATION SYSTEM MANWAY ACCESS LOCATIONS AND LADDER INFORMATION

DRAWN BY: K.STRADER

DATE: 2/15/2022

SHEET: 11 OF 13

LOCATION:T:\Drawings\Vault\DESIGNS\Storm Prism\Customer\Blackhall Studios\14ft Infiltration System Blackhall Studios.dwg

JOINT SEALANT DETAIL

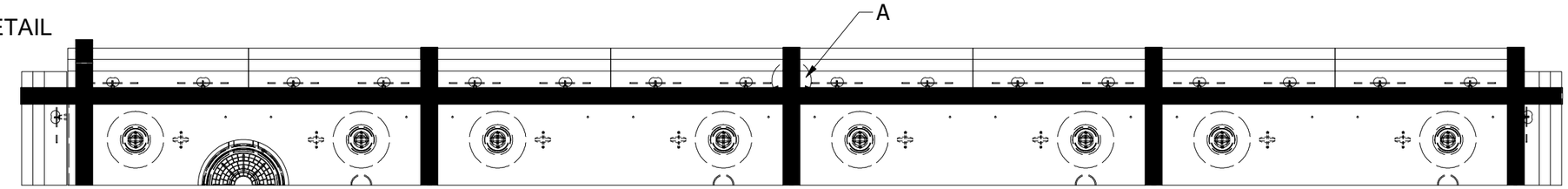

STORMPRISM SLICED PLAN VIEW TO SHOW WALL JOINT

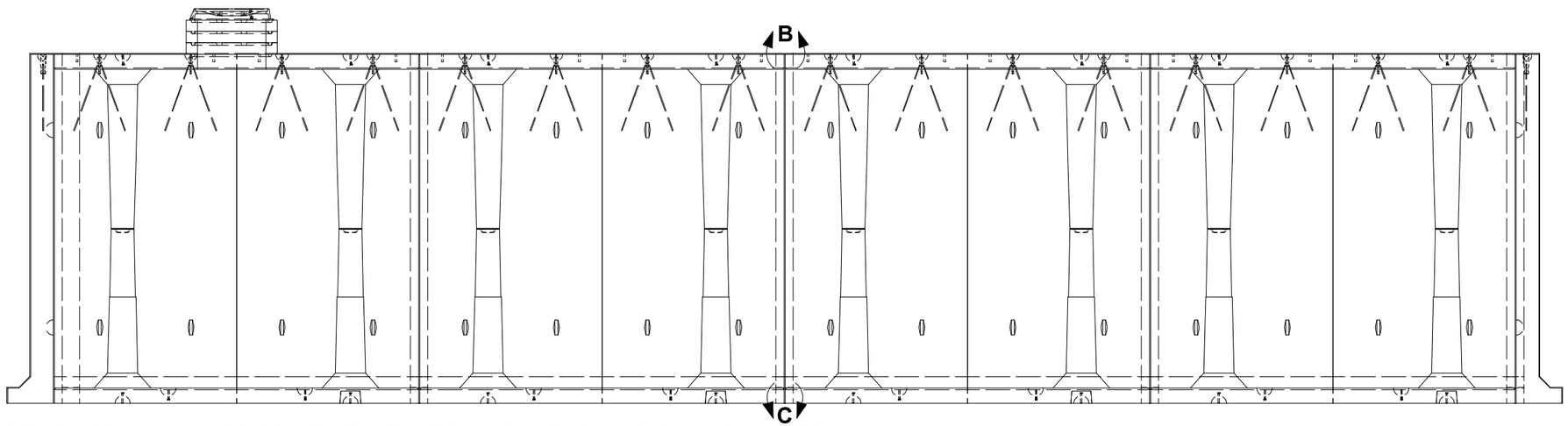

STORMPRISM SLICED PROFILE VIEW TO SHOW TOP AND FLOOR JOINTS

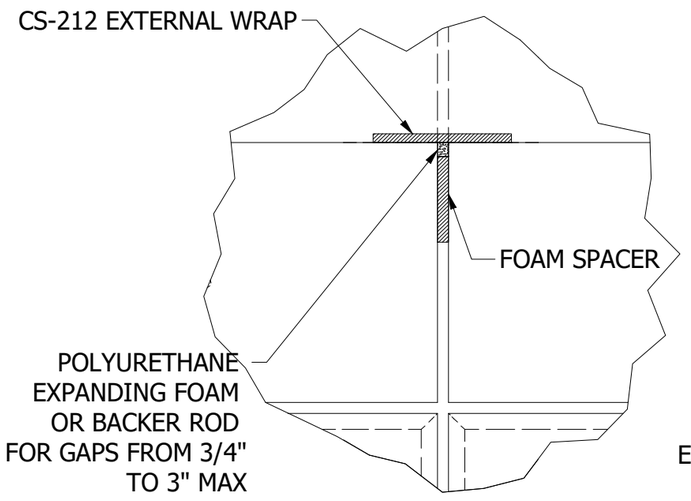

DETAIL A
WALL JOINT

ONLY VERTICAL PART OF WALL IS DETAILED FOR CLARITY

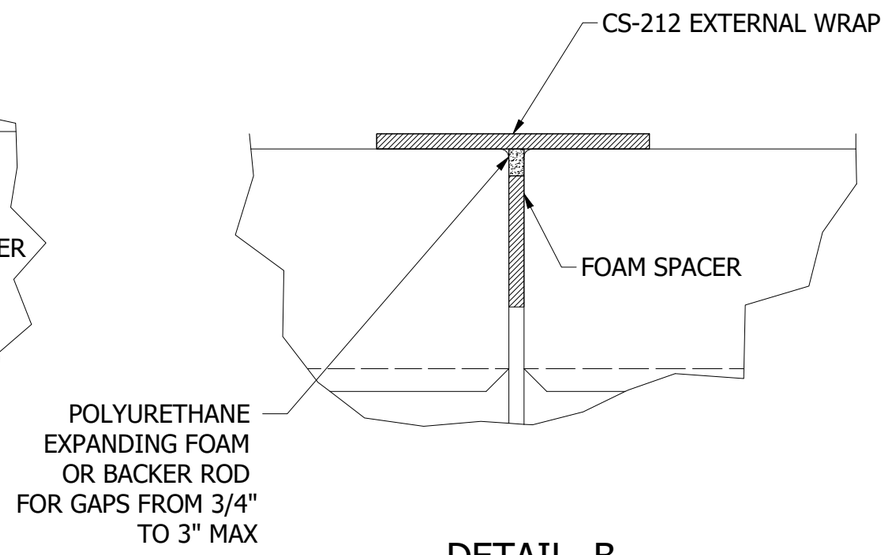

DETAIL B
TOP JOINT

WALL JOINT SEALANT NOT SHOWN FOR CLARITY

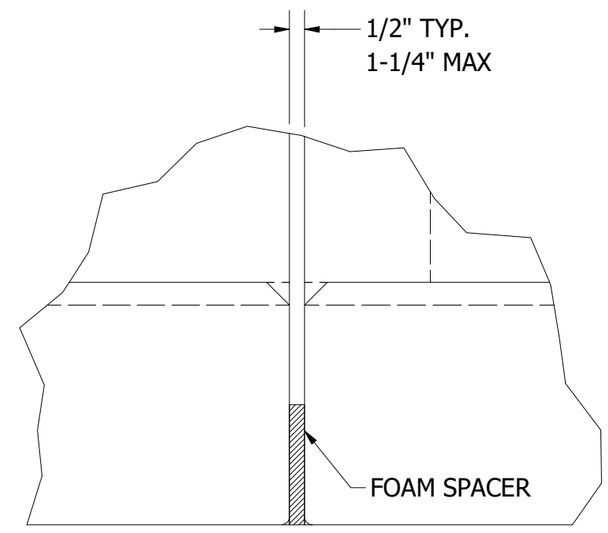

DETAIL C
BOTTOM JOINT

REVISIONS:

No.	DATE	DESCRIPTION

THE CONTENTS OF THESE DRAWINGS ARE THE PROPERTY OF PRECON PRODUCTS AND ARE PROPRIETARY AND CONFIDENTIAL. THESE DOCUMENTS SHALL NOT BE DISSEMINATED FOR ANY OTHER USE, WITHOUT THE WRITTEN CONSENT OF PRECON PRODUCTS. IF YOU RECEIVE THESE DRAWINGS IN ERROR, RETURN TO SENDER WITHOUT READING, COPYING OR DISCLOSING THE CONTENTS.

DO NOT SCALE

240 W. LOS ANGELESE AVE.
SIMI VALLEY, CA 93065
P: (805) 527-0841 F: (805) 584-0769,
WWW.PRE-CONPRODUCTS.COM

TITLE: STORMPRISM INFILTRATION SYSTEM JOINT DETAIL

DRAWN BY: K.STRADER

DATE: 2/15/2022

SHEET: 12 OF 13

LOCATION:T:\Drawings\Vault\DESIGNS\Storm Prism\Customer\Blackhall Studios\14ft Infiltration System Blackhall Studios.dwg

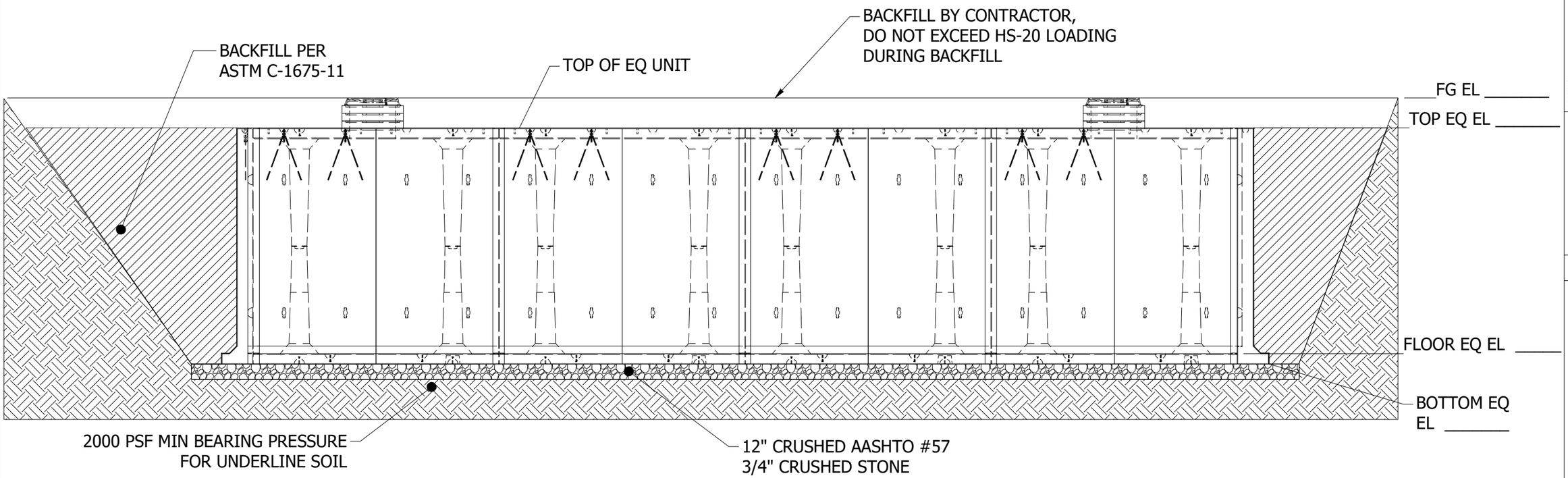

INSTALLATION SPECIFICATIONS

Storm Prism shall be installed in accordance with ASTM C-891-11 Standard Practice for Installation of Underground Precast Concrete Utility Structures.
The bearing pressure of the underlying soil must be verified by the geotechnical engineer prior to placing aggregate sub base.
The leveling bed material shall comply with APWA 216-2.4.
The leveling bed shall be graded to a tolerance of ¼" of the plan elevation.
The leveling bed shall extend beyond the Storm Prism perimeter by at least 24".
The Storm Prism modules shall be placed on line and grade per the site plans. Space between modules shall be 1/2" plus / minus 1/2"
Storm Prism modules are designed to be soil tight. All exterior joints between adjacent modules shall be sealed using a preformed, cold applied, self-adhering, polymer wrap conforming to: ASTM E-1745, C-877, C-990 Specifications, and AASHTO M198 Type B.
Wrap shall be applied per manufacture's recommendations.

BACKFILL

Fill placed around the Storm Prism Modules shall be placed evenly around the entire system in 8" lifts, per APWA 300-3.5.2.
Backfill shall be mechanically compacted (no jetting).
Special care should be taken when compacting adjacent to or near the tape seal not to disrupt the seal.
Fill placement over top of Storm Prism shall be done in accordance with ASTM C1675. Fill material not to exceed 120 PCF. At no time shall machinery or vehicles exceeding HS-20 travel over the Storm Prism.

REVISIONS:

No.	DATE	DESCRIPTION

THE CONTENTS OF THESE DRAWINGS ARE THE PROPERTY OF PRECON PRODUCTS AND ARE PRORIETARY AND CONFIDENTIAL. THESE DOCUMENTS SHALL NOT BE DISSEMINATED TO ANY OTHER USE, WITHOUT THE WRITTEN CONSENT OF PRECON PRODUCTS. IF YOU RECEIVE THESE DRAWINGS IN ERROR, RETURN TO SENDER WITHOUT READING, COPYING OR DISCLOSING THE CONTENTS.

DO NOT SCALE

240 W. LOS ANGELESE AVE.
SIMI VALLEY, CA 93065
P: (805) 527-0841 F: (805) 584-0769,
WWW.PRE-CONPRODUCTS.COM

TITLE: STORMPRISM INFILTRATION SYSTEM BACKFILL AND ELEVATION INFORMATION

DRAWN BY: K.STRADER

DATE: 2/15/2022

SHEET: 13 OF 13

LOCATION: T:\Drawings\Vault\DESIGNS\Storm Prism\Customer\Blackhall Studios\14ft Infiltration System Blackhall Studios.dwg

APPENDIX D

HYDROMODIFICATION

BASIN FLOWRATE
MODPULS CALCS

Shadowbox Studios - Draingage Basin
Rating Curve Calculations

The rating may have as many rows as needed.
You may also use ChannelStorage.exe to create the rating and paste its output below.
http://getmyrealtime.com/MoreStuff.aspx

Load Rating

0.08333333 *<<<Enter flow record time step in hours (5 minutes would be 0.08333333 hours)*
0 *<<<Enter starting elevation or just leave blank.*

Example of channel or reservoir Elev,Q,Storage rating

Elev (depth)	Outflow	Storage (ac-ft)
0	6.18	0.000
0.25	6.19	0.240
0.5	6.20	0.470
0.75	6.21	0.710
1	6.22	0.950
1.25	6.23	1.190
1.5	6.24	1.440
1.75	6.25	1.700
2	9.66	1.960
2.25	11.07	2.220
2.5	12.15	2.490
2.75	13.07	2.760
3	13.87	3.030
3.25	14.60	3.310
3.5	15.27	3.590
3.75	15.89	3.880
4	16.47	4.170
4.25	17.03	4.470
4.5	17.55	4.770
4.75	18.06	5.080
5	18.54	5.390
5.25	19.00	5.700
5.5	19.45	6.020
5.75	19.88	6.340
6	20.30	6.660
6.25	20.71	6.990
6.5	21.11	7.330
6.75	21.49	7.670
7	21.87	8.010
7.25	22.24	8.360
7.5	22.59	8.720
7.75	22.95	9.060
8	23.29	9.420
8.25	23.63	9.790
8.5	23.96	10.150
8.75	24.28	10.530
9	24.60	10.900
9.25	24.92	11.280
9.5	25.23	11.670
9.75	25.53	12.060
10	25.83	12.390
10.25	26.12	12.850
10.5	26.41	13.250
10.75	26.70	13.660
11	26.98	14.120

Shadowbox Studios - Draingage Basin
Rating Curve Calculations

depth of basin	ponded storage	BASIN INFIL Q IS 6.25 CFS. MODPULS REQUIRES OUTFLOW TO STEP UP SO THE INFIL RATE GOES FROM 6.18 CFS @ DEPTH 0.00 FT TO 6.25 CFS AT WQT DEPTH OF 1.75 FT
ft	ac-ft	
10	12.39	

Orifice*		L	1.18	ft
Q = Ca(2gh)^0.5		C	0.61	
		g	32.2	ft/s/s

Rating curve

Depth	Storage
ft	ac-ft
0.00	0.000
0.25	0.240
0.50	0.470
0.75	0.710
1.00	0.950
1.25	1.190
1.50	1.440
1.75	1.700
2.00	1.960
2.25	2.220
2.50	2.490
2.75	2.760
3.00	3.030
3.25	3.310
3.50	3.590
3.75	3.880
4.00	4.170
4.25	4.470
4.50	4.770
4.75	5.080
5.00	5.390
5.25	5.700
5.50	6.020
5.75	6.340
6.00	6.660
6.25	6.990
6.50	7.330
6.75	7.670
7.00	8.010
7.25	8.360
7.50	8.720
7.75	9.060
8.00	9.420
8.25	9.790
8.50	10.150
8.75	10.530
9.00	10.900
9.25	11.280
9.50	11.670
9.75	12.060
10.00	12.390
10.25	12.850
10.50	13.250
10.75	13.660
11.00	14.120

Outflow Calculation		
Outlet Structure with 1.39 SF Inlet*	**INFIL Q**	**Sum Q**
cfs	**cfs**	**cfs**
0.00	6.18	6.18
0.00	6.19	6.19
0.00	6.2	6.20
0.00	6.21	6.21
0.00	6.22	6.22
0.00	6.23	6.23
0.00	6.24	6.24
0.00	6.25	6.25
3.41	6.25	9.66
4.82	6.25	11.07
5.90	6.25	12.15
6.82	6.25	13.07
7.62	6.25	13.87
8.35	6.25	14.60
9.02	6.25	15.27
9.64	6.25	15.89
10.22	6.25	16.47
10.78	6.25	17.03
11.30	6.25	17.55
11.81	6.25	18.06
12.29	6.25	18.54
12.75	6.25	19.00
13.20	6.25	19.45
13.63	6.25	19.88
14.05	6.25	20.30
14.46	6.25	20.71
14.86	6.25	21.11
15.24	6.25	21.49
15.62	6.25	21.87
15.99	6.25	22.24
16.34	6.25	22.59
16.70	6.25	22.95
17.04	6.25	23.29
17.38	6.25	23.63
17.71	6.25	23.96
18.03	6.25	24.28
18.35	6.25	24.60
18.67	6.25	24.92
18.98	6.25	25.23
19.28	6.25	25.53
19.58	6.25	25.83
19.87	6.25	26.12
20.16	6.25	26.41
20.45	6.25	26.70
20.73	6.25	26.98

C	a	h	2gh^0.5	Q
	sf			
0.61	1.3924	0.00	0.0	0.00
0.61	1.3924	0.00	0.0	0.00
0.61	1.3924	0.00	0.0	0.00
0.61	1.3924	0.00	0.0	0.00
0.61	1.3924	0.00	0.0	0.00
0.61	1.3924	0.00	0.0	0.00
0.61	1.3924	0.00	0.0	0.00
0.61	1.3924	0.00	0.0	0.00
0.61	1.3924	0.25	4.0	3.41
0.61	1.3924	0.50	5.7	4.82
0.61	1.3924	0.75	6.9	5.90
0.61	1.3924	1.00	8.0	6.82
0.61	1.3924	1.25	9.0	7.62
0.61	1.3924	1.50	9.8	8.35
0.61	1.3924	1.75	10.6	9.02
0.61	1.3924	2.00	11.3	9.64
0.61	1.3924	2.25	12.0	10.22
0.61	1.3924	2.50	12.7	10.78
0.61	1.3924	2.75	13.3	11.30
0.61	1.3924	3.00	13.9	11.81
0.61	1.3924	3.25	14.5	12.29
0.61	1.3924	3.50	15.0	12.75
0.61	1.3924	3.75	15.5	13.20
0.61	1.3924	4.00	16.0	13.63
0.61	1.3924	4.25	16.5	14.05
0.61	1.3924	4.50	17.0	14.46
0.61	1.3924	4.75	17.5	14.86
0.61	1.3924	5.00	17.9	15.24
0.61	1.3924	5.25	18.4	15.62
0.61	1.3924	5.50	18.8	15.99
0.61	1.3924	5.75	19.2	16.34
0.61	1.3924	6.00	19.7	16.70
0.61	1.3924	6.25	20.1	17.04
0.61	1.3924	6.50	20.5	17.38
0.61	1.3924	6.75	20.8	17.71
0.61	1.3924	7.00	21.2	18.03
0.61	1.3924	7.25	21.6	18.35
0.61	1.3924	7.50	22.0	18.67
0.61	1.3924	7.75	22.3	18.98
0.61	1.3924	8.00	22.7	19.28
0.61	1.3924	8.25	23.0	19.58
0.61	1.3924	8.50	23.4	19.87
0.61	1.3924	8.75	23.7	20.16
0.61	1.3924	9.00	24.1	20.45
0.61	1.3924	9.25	24.4	20.73

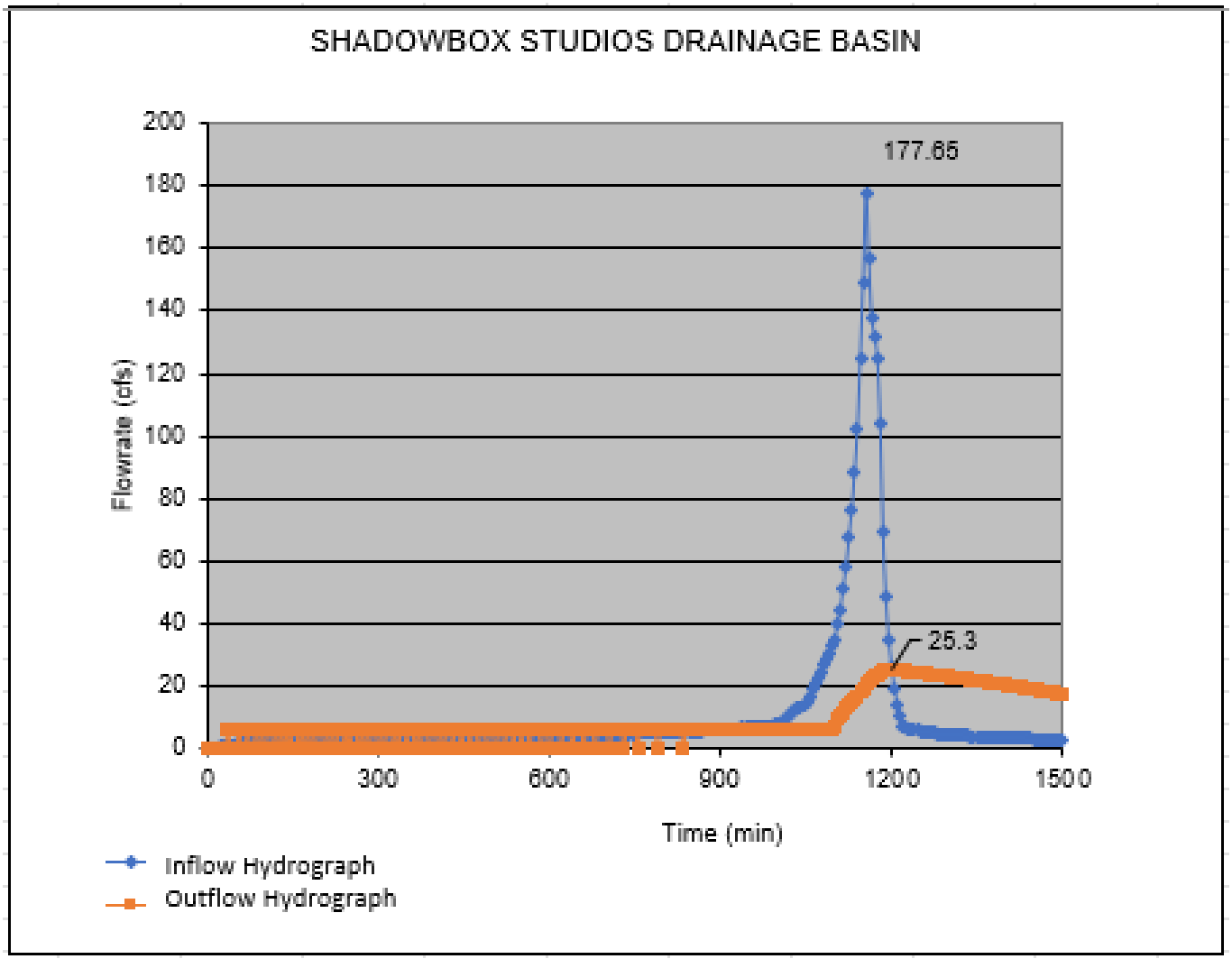
SHADOWBOX STUDIOS DRAINAGE BASIN
Flowrate (cfs)
200
180
160
140
120
100
80
60
40
20
0
0
300
600
900
1200
1500
Time (min)
177.65
25.3
Inflow Hydrograph
Outflow Hydrograph

Modified PULS Method
Shadowbox Studios - Drainage Basin

Modified PULS Method

Time	Inflow cfs	Outflow	Elev	Storage
0	0	0	0	0
5	0.17	0	0	0
10	0.34	0	0	0
15	0.51	0	0	0
20	0.67	0	0	0
25	0.84	0	0	0
30	1.01	0	0	0
35	1.18	6.2	0.01	0
40	1.35	0	0	0
45	1.52	0	0	0
50	1.69	0	0	0
55	1.85	6.2	0.01	0
60	2.02	0	0	0
65	2.19	0	0	0
70	2.36	6.2	0.01	0
75	2.53	0	0	0
80	2.7	0	0	0
85	2.86	6.2	0.02	0
90	3.03	0	0	0
95	3.2	6.2	0.02	0
100	3.37	0	0	0
105	3.38	6.2	0.02	0
110	3.38	6.2	0	0
115	3.39	0	0	0
120	3.4	6.2	0.01	0
125	3.41	0	0	0
130	3.41	6.2	0.01	0
135	3.42	0	0	0
140	3.43	6.2	0.02	0
145	3.43	0	0	0
150	3.44	6.2	0.02	0
155	3.45	6.2	0	0
160	3.45	0	0	0
165	3.46	6.2	0.01	0
170	3.47	0	0	0
175	3.48	6.2	0.01	0
180	3.48	0	0	0
185	3.49	6.2	0.02	0
190	3.5	0	0	0
195	3.5	6.2	0.02	0
200	3.51	6.2	0	0
205	3.52	0	0	0
210	3.53	6.2	0.01	0
215	3.54	0	0	0
220	3.55	6.2	0.02	0
225	3.56	0	0	0
230	3.56	6.2	0.02	0

Modified PULS Method
Shadowbox Studios - Drainage Basin

Modified PULS Method

Time	Inflow cfs	Outflow	Elev	Storage
235	3.57	6.2	0	0
240	3.58	0	0	0
245	3.59	6.2	0.01	0
250	3.6	0	0	0
255	3.61	6.2	0.02	0
260	3.62	6.2	0	0
265	3.63	0	0	0
270	3.64	6.2	0.01	0
275	3.65	0	0	0
280	3.65	6.2	0.02	0
285	3.66	0	0	0
290	3.67	6.2	0.02	0
295	3.68	6.2	0.01	0
300	3.69	0	0	0
305	3.7	6.2	0.01	0
310	3.71	0	0	0
315	3.72	6.2	0.02	0
320	3.73	6.2	0.01	0
325	3.74	0	0	0
330	3.75	6.2	0.02	0
335	3.76	0	0	0
340	3.77	6.2	0.03	0
345	3.78	6.2	0.01	0
350	3.79	0	0	0
355	3.8	6.2	0.02	0
360	3.81	6.2	0	0
365	3.82	0	0	0
370	3.83	6.2	0.01	0
375	3.84	0	0	0
380	3.85	6.2	0.02	0
385	3.86	6.2	0.01	0
390	3.87	0	0	0
395	3.88	6.2	0.02	0
400	3.89	6.2	0	0
405	3.9	0	0	0
410	3.92	6.2	0.01	0
415	3.93	0	0	0
420	3.94	6.2	0.02	0
425	3.96	6.2	0.01	0
430	3.97	0	0	0
435	3.98	6.2	0.02	0
440	4	6.2	0	0
445	4.01	0	0	0
450	4.03	6.2	0.02	0
455	4.04	6.2	0	0
460	4.05	0	0	0
465	4.07	6.2	0.02	0
470	4.08	6.2	0	0

Modified PULS Method
Shadowbox Studios - Drainage Basin

Modified PULS Method

Time	Inflow cfs	Outflow	Elev	Storage
475	4.09	0	0	0
480	4.11	6.2	0.02	0
485	4.12	6.2	0	0
490	4.13	0	0	0
495	4.15	6.2	0.02	0
500	4.16	6.2	0	0
505	4.18	0	0	0
510	4.19	6.2	0.02	0
515	4.21	6.2	0	0
520	4.22	0	0	0
525	4.24	6.2	0.02	0
530	4.25	6.2	0.01	0
535	4.27	0	0	0
540	4.28	6.2	0.02	0
545	4.3	6.2	0.01	0
550	4.31	0	0	0
555	4.33	6.2	0.03	0
560	4.34	6.2	0.01	0
565	4.36	0	0	0
570	4.37	6.2	0.03	0
575	4.39	6.2	0.02	0
580	4.4	6.2	0.01	0
585	4.41	0	0	0
590	4.43	6.2	0.02	0
595	4.44	6.2	0.01	0
600	4.46	0	0	0
605	4.48	6.2	0.03	0
610	4.5	6.2	0.02	0
615	4.52	6.2	0.01	0
620	4.54	0	0	0
625	4.56	6.2	0.03	0
630	4.58	6.2	0.02	0
635	4.6	6.2	0	0
640	4.62	0	0	0
645	4.64	6.2	0.03	0
650	4.66	6.2	0.02	0
655	4.68	6.2	0.01	0
660	4.7	0	0	0
665	4.72	6.2	0.03	0
670	4.74	6.2	0.02	0
675	4.76	6.2	0.01	0
680	4.78	0	0	0
685	4.8	6.2	0.03	0
690	4.82	6.2	0.02	0
695	4.84	6.2	0.01	0
700	4.86	6.2	0	0
705	4.89	0	0	0
710	4.91	6.2	0.03	0

Modified PULS Method
Shadowbox Studios - Drainage Basin

Modified PULS Method

Time	Inflow cfs	Outflow	Elev	Storage
715	4.94	6.2	0.02	0
720	4.97	6.2	0.01	0
725	4.99	6.2	0	0
730	5.02	0	0	0
735	5.05	6.2	0.03	0
740	5.07	6.2	0.02	0
745	5.1	6.2	0.01	0
750	5.13	6.2	0.01	0
755	5.15	0	0	0
760	5.18	6.2	0.04	0
765	5.2	6.2	0.03	0
770	5.23	6.2	0.02	0
775	5.26	6.2	0.01	0
780	5.28	6.2	0.01	0
785	5.31	6.2	0	0
790	5.34	0	0	0
795	5.36	6.2	0.03	0
800	5.39	6.2	0.03	0
805	5.43	6.2	0.02	0
810	5.48	6.2	0.02	0
815	5.52	6.2	0.01	0
820	5.56	6.2	0.01	0
825	5.61	6.2	0	0
830	5.65	6.2	0	0
835	5.69	0	0	0
840	5.73	6.2	0.04	0
845	5.78	6.2	0.03	0
850	5.82	6.2	0.03	0
855	5.86	6.2	0.03	0
860	5.91	6.2	0.03	0
865	5.95	6.2	0.03	0
870	5.99	6.2	0.02	0
875	6.04	6.2	0.02	0
880	6.08	6.2	0.02	0
885	6.12	6.2	0.02	0
890	6.16	6.2	0.02	0
895	6.21	6.2	0.02	0
900	6.25	6.2	0.02	0
905	6.33	6.2	0.02	0
910	6.4	6.2	0.02	0
915	6.48	6.2	0.03	0
920	6.56	6.2	0.03	0
925	6.63	6.2	0.03	0
930	6.71	6.2	0.03	0
935	6.79	6.2	0.04	0
940	6.86	6.2	0.04	0
945	6.94	6.2	0.05	0
950	7.02	6.2	0.05	0.1

Modified PULS Method
Shadowbox Studios - Drainage Basin

Modified PULS Method

Time	Inflow cfs	Outflow	Elev	Storage
955	7.09	6.2	0.06	0.1
960	7.17	6.2	0.07	0.1
965	7.24	6.2	0.07	0.1
970	7.32	6.2	0.08	0.1
975	7.4	6.2	0.09	0.1
980	7.47	6.2	0.1	0.1
985	7.55	6.2	0.11	0.1
990	7.63	6.2	0.12	0.1
995	7.7	6.2	0.13	0.1
1000	7.78	6.2	0.14	0.1
1005	8.51	6.2	0.15	0.1
1010	9.25	6.2	0.17	0.2
1015	9.98	6.2	0.2	0.2
1020	10.72	6.2	0.23	0.2
1025	11.45	6.2	0.26	0.3
1030	12.18	6.2	0.31	0.3
1035	12.92	6.2	0.35	0.3
1040	13.65	6.2	0.41	0.4
1045	14.39	6.2	0.47	0.4
1050	15.12	6.2	0.53	0.5
1055	17.09	6.2	0.6	0.6
1060	19.06	6.2	0.68	0.6
1065	21.03	6.2	0.78	0.7
1070	23	6.2	0.9	0.9
1075	24.98	6.2	1.02	1
1080	26.95	6.2	1.17	1.1
1085	28.92	6.2	1.32	1.3
1090	30.89	6.2	1.48	1.4
1095	32.86	6.2	1.65	1.6
1100	34.83	7.4	1.83	1.8
1105	39.79	9.8	2.02	2
1110	44.75	11	2.23	2.2
1115	51.5	12	2.47	2.5
1120	58.25	13	2.74	2.7
1125	67.42	14	3.05	3.1
1130	76.59	15	3.4	3.5
1135	88.36	16	3.8	3.9
1140	102.44	17.1	4.26	4.5
1145	124.94	18.2	4.8	5.1
1150	148.89	19.4	5.45	6
1155	177.65	20.7	6.22	6.9
1160	156.35	21.8	6.96	8
1165	137.85	22.7	7.57	8.8
1170	131.95	23.4	8.11	9.6
1175	124.85	24.1	8.6	10.3
1180	104.25	24.6	9.02	10.9
1185	69.09	25	9.3	11.4
1190	48.42	25.2	9.44	11.6

Modified PULS Method
Shadowbox Studios - Drainage Basin

Modified PULS Method

Time	Inflow cfs	Outflow	Elev	Storage
1195	35.19	25.3	9.52	11.7
1200	26.28	25.3	9.54	11.7
1205	19.67	25.3	9.53	11.7
1210	14.45	25.2	9.49	11.7
1215	10.37	25.2	9.44	11.6
1220	7.41	25.1	9.37	11.5
1225	7.09	25	9.29	11.3
1230	6.78	24.9	9.21	11.2
1235	6.49	24.8	9.13	11.1
1240	6.26	24.7	9.04	11
1245	6.05	24.5	8.96	10.8
1250	5.83	24.4	8.87	10.7
1255	5.7	24.3	8.78	10.6
1260	5.57	24.2	8.7	10.5
1265	5.43	24.1	8.62	10.3
1270	5.29	24	8.53	10.2
1275	5.16	23.9	8.44	10.1
1280	5.08	23.8	8.35	9.9
1285	5.01	23.6	8.26	9.8
1290	4.89	23.5	8.18	9.7
1295	4.79	23.4	8.09	9.6
1300	4.72	23.3	8	9.4
1305	4.65	23.2	7.91	9.3
1310	4.58	23.1	7.83	9.2
1315	4.5	22.9	7.74	9
1320	4.41	22.8	7.64	8.9
1325	4.35	22.7	7.55	8.8
1330	4.29	22.5	7.46	8.7
1335	4.25	22.4	7.37	8.5
1340	4.2	22.3	7.29	8.4
1345	4.14	22.2	7.2	8.3
1350	4.08	22	7.11	8.2
1355	4.03	21.9	7.02	8
1360	3.97	21.8	6.93	7.9
1365	3.91	21.6	6.84	7.8
1370	3.85	21.5	6.75	7.7
1375	3.82	21.4	6.66	7.6
1380	3.78	21.2	6.58	7.4
1385	3.76	21.1	6.49	7.3
1390	3.74	21	6.4	7.2
1395	3.69	20.8	6.31	7.1
1400	3.63	20.7	6.23	7
1405	3.6	20.5	6.14	6.8
1410	3.57	20.4	6.05	6.7
1415	3.54	20.2	5.96	6.6
1420	3.51	20.1	5.87	6.5
1425	3.49	19.9	5.78	6.4
1430	3.46	19.8	5.69	6.3

APPENDIX E

CITY/COUNTY SPLITTER MANHOLE

MANNING CALCULATION

Worksheet for 54in RCP @ 0.8%

Project Description

Friction Method	Manning Formula
Solve For	Discharge

Input Data

Roughness Coefficient	0.012	
Channel Slope	0.00800	ft/ft
Normal Depth	4.50	ft
Diameter	4.50	ft

Results

PIPES MAX DISCHARGE > PROJECT Q

Discharge	190.54	ft^3/s
Flow Area	15.90	ft^2
Wetted Perimeter	14.14	ft
Hydraulic Radius	1.13	ft
Top Width	0.00	ft
Critical Depth	3.97	ft
Percent Full	100.0	%
Critical Slope	0.00718	ft/ft
Velocity	11.98	ft/s
Velocity Head	2.23	ft
Specific Energy	6.73	ft
Froude Number	0.00	
Maximum Discharge	204.96	ft^3/s
Discharge Full	190.54	ft^3/s
Slope Full	0.00800	ft/ft
Flow Type	SubCritical	

GVF Input Data

Downstream Depth	0.00	ft
Length	0.00	ft
Number Of Steps	0	

GVF Output Data

Upstream Depth	0.00	ft
Profile Description		
Profile Headloss	0.00	ft
Average End Depth Over Rise	0.00	%
Normal Depth Over Rise	100.00	%
Downstream Velocity	Infinity	ft/s

Worksheet for 54in RCP @ 0.8%

GVF Output Data

Upstream Velocity	Infinity	ft/s
Normal Depth	4.50	ft
Critical Depth	3.97	ft
Channel Slope	0.00800	ft/ft
Critical Slope	0.00718	ft/ft

APPENDIX F

HYDROLOGY MAPS

SHADOWBOX STUDIOS
EXISTING CONDITION HYDROLOGY MAP

9/12/22

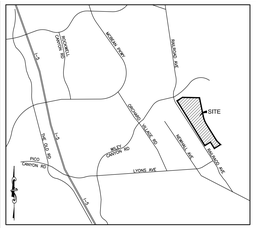

VICINITY MAP
NOT TO SCALE

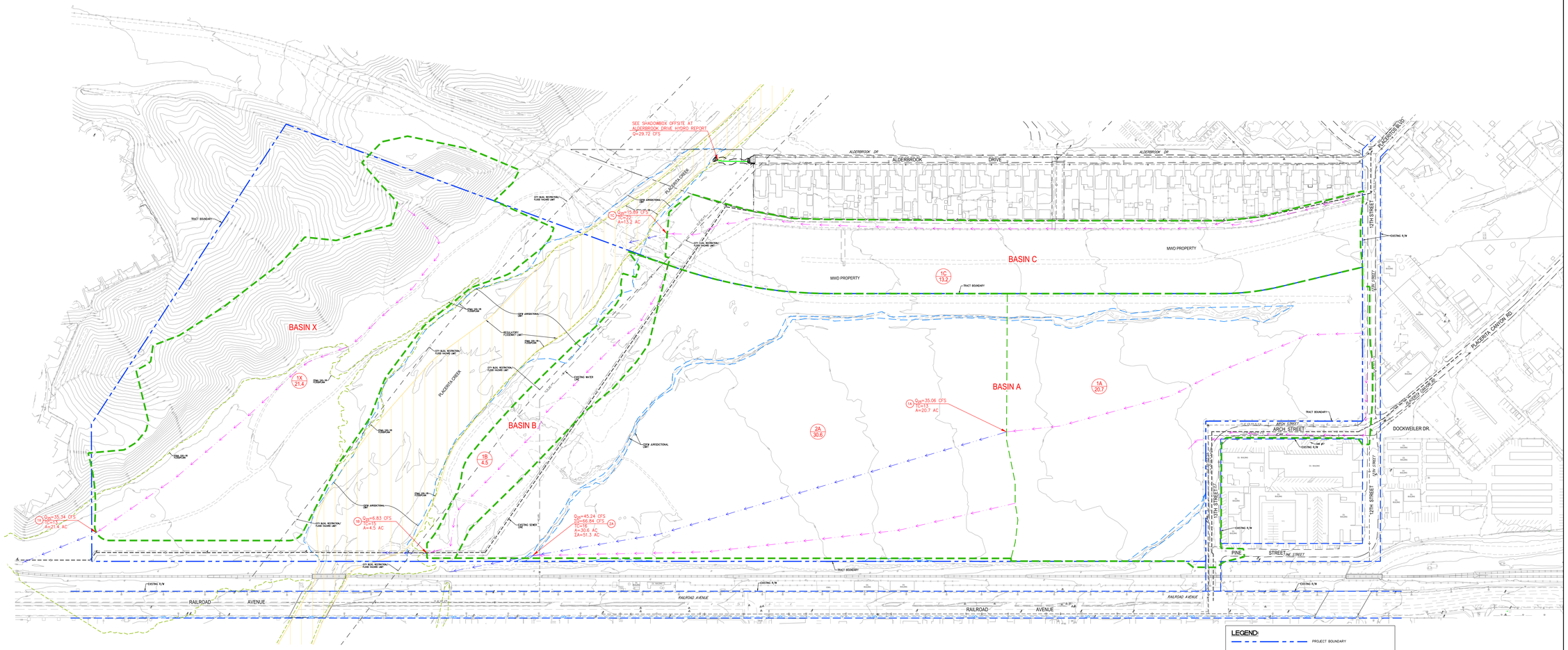

BASIN'S A, B, C, & X-EXISTING CONDITION HYDROLOGIC PARAMETERS																		
SUBAREA	AREA	OVERLAND (Tc)		FLOWPATH			50-Yr RAIN	IMP	SOIL	DPA #	Tc		Subarea Q, 10 yr	ΣQ, 10yr	VOLUME, 10yr	Subarea Q, 25yr	ΣQ, 25yr	VOLUME, 25yr
		LENGTH	SLOPE	LENGTH	SLOPE						10-YR	25-YR						
	ac	ft	ft/ft	ft	ft/ft		in	%			min	min	cfs	cfs	ac-ft	cfs	cfs	ac-ft
1A	20.7	1250	0.014	1645	0.014	8.10	10	20	9		17	13	22.35	22.35		35.06	35.06	
2A	30.6	1630	0.014	280	0.036	8.10	8	20	9		20	16	29.4	43.86	5.59	45.24	66.84	7.37
1B	4.5	1305	0.011	150	0.033	8.10	5	20	9		19	15	4.36	4.36	0.36	6.83	6.83	0.57
1C	13.2	2395	0.013	130	0.038	8.10	8	20	9		28	22	10.07	10.07	1.39	15.89	15.89	1.85
1X	21.4	1725	0.067	250	0.010	8.10	5	20	9		16	13	23.23	23.23	2.05	35.34	35.34	2.74
Total														81.52	9.39		124.9	12.53

LEGEND:

- PROJECT BOUNDARY
- BASIN BOUNDARY
- SUBAREA BOUNDARY
- OVERLAND
- FLOWPATH
- FEMA 100-YR EFFECTIVE FLOODPLAIN
- FEMA REGULATORY FLOODWAY LIMIT
- SUBAREA NAME
- XX / XX.X — SUBAREA ACREAGE (AC)
- Q_{25} — ONSITE FLOWRATE 25-YEAR (CFS)
- Q — SUM OF FLOWRATES (CFS)
- A — ONSITE SUBAREA ACREAGE (AC)
- ΣA — SUM OF ONSITE SUBAREA ACREAGE (AC)
- Tc — TIME OF CONCENTRATION

SCALE: 1"=100'

ALLIANCE
LAND PLANNING & ENGINEERING INC.
2348 FARADAY AVE.
CARLSBAD, CA 92008
TEL: (760) 431-9898
FAX: (760) 431-9902
2140 SOUNEY ROAD
SUITE 100
VALRICO, FL 33594
TEL: (941) 799-2797
CIVIL ENGINEERING • LAND PLANNING • WILDLIFE DESIGN • SURVEYING

\\CAD\2020\HYDRO&WQT\2020_HYDROLOGY&WQT.dwg

SHADOWBOX STUDIOS
DEVELOPED HYDROLOGY MAP
9/13/22

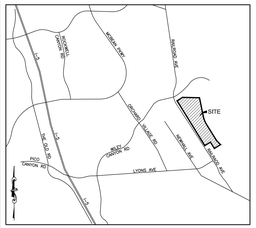

VICINITY MAP
NOT TO SCALE

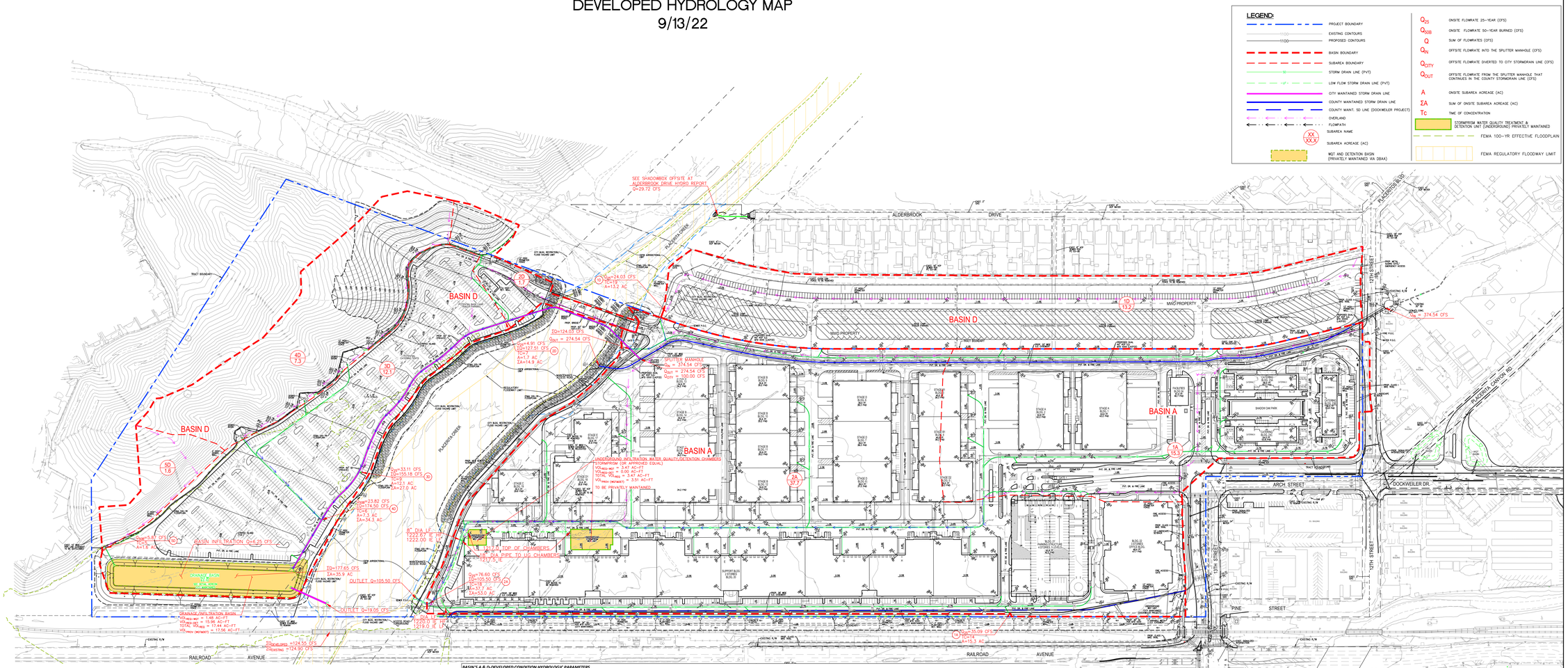

EXISTING VS DEVELOPED VOLUME				
50-YR CLEAR				
VOLUME (AC-FT)	EX	DEV	Δ	PROJ
	9.39	30.34	20.95	21.07

EXISTING 25YR Q VS DEVELOPED DESIGN Q			
FLOWRATE Q (CFS)	EX	DEV	Δ
	124.9	124.55	-0.35

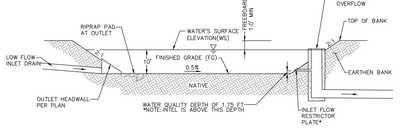

DRAINAGE/INFILTRATION BASIN
NOT TO SCALE

BASIN'S A & D-DEVELOPED CONDITION HYDROLOGIC PARAMETERS

SUBAREA	AREA	OVERLAND (Tc) LENGTH	OVERLAND (Tc) SLOPE	FLOWPATH LENGTH	FLOWPATH SLOPE	50-Yr RAIN	IMP	SOIL	DPA #	Tc 10-YR	Tc 25-YR	Tc 50-YR	Subarea Q, 10yr	ΣQ, 10yr	VOLUME, 10yr	Subarea Q, Design	ΣQ, Design	VOLUME, Design
	ac	ft	ft/ft	ft	ft/ft	in	%			min	min	min	cfs	cfs	ac-ft	cfs	cfs	ac-ft
1A	15.3	1770	0.011	2095	0.008	8.10	90	20	9	16	14	-	26.62	26.62		35.09	35.09	
2A	37.7	2450	0.008	55	0.009	8.10	90	20	9	21	18	-	57.54	80.06	20.45	76.60	105.50	25.16
1D	13.2	2500	0.010	680	0.009	8.10	70	20	9	22	19	-	17.8	17.8	-	24.03	24.03	-
2D	1.7	555	0.014	1005	0.008	8.10	60	20	9	8	7	-	3.66	20.59	-	4.91	27.51	-
3D	12.1	870	0.011	200	0.008	8.10	80	20	9	10	9	-	25.48	41.66	-	33.11	55.18	-
4D	7.3	1160	0.034	190	0.005	8.10	5	20	9	8	-	6	12.27	51.99	-	23.82	74.5	
5D	1.6	675	0.207	1	0.010	8.10	5	20	9	6	-	5	3.21	53.79	9.89	5.87	77.65	12.92
Total	88.9													133.85	30.34		183.15	38.08

BASIN'S A, B, C, & A-EXISTING CONDITION HYDROLOGIC PARAMETERS

SUBAREA	AREA	OVERLAND (Tc) LENGTH	OVERLAND (Tc) SLOPE	FLOWPATH LENGTH	FLOWPATH SLOPE	50-Yr RAIN	IMP	SOIL	DPA #	Tc 10-YR	Tc 25-YR	Subarea Q, 10-yr	ΣQ, 10yr	VOLUME, 10yr	Subarea Q, 25yr	ΣQ, 25yr	VOLUME, 25yr
	ac	ft	ft/ft	ft	ft/ft	in	%			min	min	cfs	cfs	ac-ft	cfs	cfs	ac-ft
1A	20.7	1250	0.014	1645	0.014	8.10	10	20	9	17	13	22.35	22.35	-	35.06	35.06	-
2A	30.6	1630	0.014	280	0.036	8.10	8	20	9	20	16	29.4	43.86	5.59	45.24	66.84	7.37
1B	4.5	1305	0.011	150	0.033	8.10	5	20	9	19	15	4.36	4.36	0.36	6.83	6.83	0.57
1C	13.2	2395	0.013	130	0.038	8.10	8	20	9	28	22	10.07	10.07	1.39	15.89	15.89	1.85
1X	21.4	1725	0.067	250	0.010	8.10	5	20	9	16	13	23.23	23.23	2.05	35.34	35.34	2.74
Total													81.52	9.39		124.9	12.53

ALLIANCE
LAND PLANNING & ENGINEERING INC.
2348 FARADAY AVE.
CARLSBAD, CA 92008
TEL: (760) 431-9696
FAX: (760) 431-9802
2745 SIDNEY ROAD
SUITE 100
VALRICO, FL 33594
TEL: (941) 798-2797
CIVIL ENGINEERING • LAND PLANNING • WILDLIFE DESIGN • SURVEYING

SCALE: 1"=100'

\\CAD\2020\HYDROGMCT\2020_HYDROLOGYBMCT.dwg

APPENDIX I-2
HYDROLOGY REPORT
(OFF-SITE)

HYDROLOGY REPORT

City of Santa Clarita

Blackhall Studios
(Offsite)

TR 083513

Prepared For:
LA Railroad 93, LLC
1415 Constitution Road SE,
Atlanta, GA 30316

Prepared By:
Alliance Land Planning & Engineering, Inc.
2248 Faraday Ave.
Carlsbad, CA 92008

JULY 19, 2022

JN 2026

Table of Contents

PROJECT DESCRIPTION 1
METHODOLOGY 1
DESIGN STORM EVENT 1
EXISTING CONDITION DRAINAGE 1
PROPOSED CONDITION DRAINAGE 2
RESULTS 2
HYDROMODIFICATION 2
WATER QUALITY 2
CONCLUSION 3

List of Appendices

Appendix A – Time of Concentration (TC)
Appendix B – Hydrologic Modeling Output (LAR04)
Appendix C – Hydrology Exhibit

Project Description

The Blackhall project is an approximately 93.5-acre studio development project located in the City of Santa Clarita (City). The purpose of this report is to convey the existing flow that enters the site at 12th Street across the site and into Placerita Creek. The onsite hydrology for the studio project is via a separate hydrology report being reviewed by the City. This report will cover the offsite flows that will be routed through the site to Placerita Creek.

Methodology

Methods currently outlined in the Los Angeles County Hydrology Manual have been used throughout this study. Time of concentration (TC) values were calculated using County of Los Angeles, HydroCalc software. To calculate TC's HydroCalc uses a subarea's acreage, flow path length/slope, imperviousness, and some of the info provided in Table 1 below. Subareas acreages were determined with a combination of site visits, Los Angeles GIS topography, and Google Earth information. Refer to Appendix A for full TC calculations.

Flowrates were calculated using the Modified Rational Method and County of Los Angeles approved, LAR04 software. Even though HydroCalc does calculate flowrates those values are not approved for use. A summary of general hydrologic parameters for the offsite flows is taken from the relevant 50-yr, 24-hr isohyetal map is provided in Table 1 below. The hydrologic parameters map is provided in Appendix A.

Table 1 - General Hydrologic Parameters

Parameter	Value
50-yr. 24-Hr Isohyetal Map	Newhall
50-yr Inches of Rainfall (24 Hours)	8.4 in
Soil Classification Area	97
Debris Potential Area (DPA Zone)	5 & 9

Design Storm Event

The design storm event modeled for this project follows Los Angeles County criteria utilizing a 50-yr burned storm event for subareas 1A, 2A, and 3A. Additionally, the 50-yr clear storm event is used for subareas 4A and 5A.

Existing Condition Drainage

The existing condition drainage area extends east (upstream) approximately 6000' and flows overland where it crosses under 12th street via an existing 48" publicly maintained pipe for small/medium storms and overland across 12th street in large storms.

Proposed Condition Drainage

In the proposed condition drainage is picked up at 12th street and conveyed through the site via two 60" drainpipes that will be publicly maintained (MTD). At the north end of the MTD there will be a splitter manhole in order to split off 178 cfs to a city-maintained drainage basin to mitigate for the studio project's onsite hydromodification requirements.

Results

The total flowrate generated by the offsite drainage area is 374.54 cfs. Table 2 shows a summary of the proposed MTD flowrates of the 50-year design condition along with the split flow being diverted to the proposed drainage basin.

Table 2 – Existing VS Developed Flowrates

LOCATION	FLOWRATE Q
	cfs
5A (OFFSITE, Q_IN)	374.54
Q_OUT	196.52
Q_CITY	178.02

To bring the total onsite project flowrate down to the existing condition level, 178.02 cfs (during storms greater than or equal to the 10-year storm) will be split off from the total offsite flow of 374.54 and conveyed through the project and sent to the drainage basin on the north side of the site. The splitter manhole will allow up to 40 cfs (the low flow) from a storm event to pass through to Placerita Creek. The splitter manhole will then have an outlet above the 40 cfs level to split off the next 178.02 cfs from larger storms; then it will have a third level weir that will allow flows above 218.02 cfs to continue through the manhole and outlet to the creek.

Hydromodification

For the offsite flows, no Hydromodification is required since flows are unchanged. The Blackhall Studio project however discharges to Placerita Creek and hydromodification is required. During large storm events flow will be diverted from the offsite flow to a drainage basin via a City maintained pipe in order to mitigate the onsite hydromodification flow. The City of Santa Clarita is reviewing the onsite hydrology and water quality reports which includes the onsite hydromodification.

Water Quality

Water quality aspects of this project are covered separately within the USMP/LID Report being reviewed by the City. Water quality treatment will be achieved through an onsite underground water

quality chamber system and a drainage basin. See the USMP report for additional info and details. The County is not responsible for water quality aspects of this project.

Conclusion

The proposed Blackhall project is in compliance with the City of Santa Clarita and Los Angeles County standards. Existing offsite flows will be conveyed through the project to Placerita Creek. Therefore, it is concluded that the project will have no negative impact on the existing downstream drainage system.

APPENDIX A

TIME OF CONCENTRATION (TC)

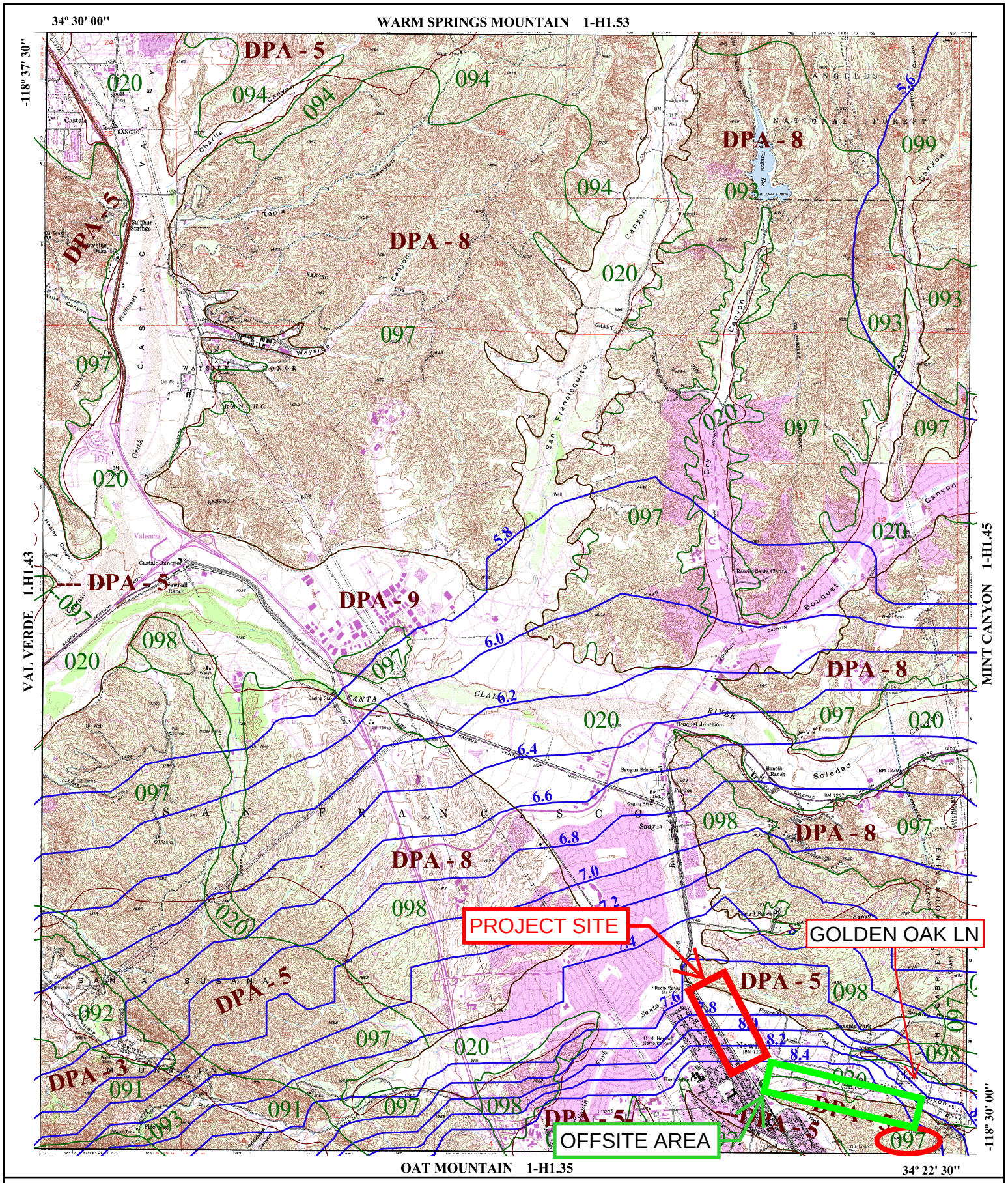

016 SOIL CLASSIFICATION AREA

7.2 INCHES OF RAINFALL

DPA - 6 DEBRIS POTENTIAL AREA

N W E S

1 0 1 2 Miles

25-YEAR 24-HOUR ISOHYET REDUCTION FACTOR: 0.878
10-YEAR 24-HOUR ISOHYET REDUCTION FACTOR: 0.714

N E W H A L L
50-YEAR 24-HOUR ISOHYET

1-H1.44

LOS ANGELES COUNTY PUBLIC WORKS Public Service That Works

Peak Flow Hydrologic Analysis

File location: I:/Project Files/2026 - BLACKHALL STUDIOS/HYDROLOGY/OFFSITE/HYDROCALCS/BLACKHALL - EX OFFSITE Report - 97.pdf
Version: HydroCalc 1.0.3

Input Parameters

Project Name	BLACKHALL - EX OFFSITE
Subarea ID	1A
Area (ac)	39.3
Flow Path Length (ft)	2470.0
Flow Path Slope (vft/hft)	0.091
50-yr Rainfall Depth (in)	8.4
Percent Impervious	0.55
Soil Type	97
Design Storm Frequency	50-yr
Fire Factor	0
LID	False

Output Results

Modeled (50-yr) Rainfall Depth (in)	8.4
Peak Intensity (in/hr)	3.4597
Undeveloped Runoff Coefficient (Cu)	0.7516
Developed Runoff Coefficient (Cd)	0.8332
Time of Concentration (min)	11.0
Clear Peak Flow Rate (cfs)	113.2904
Burned Peak Flow Rate (cfs)	113.2904
24-Hr Clear Runoff Volume (ac-ft)	16.6603
24-Hr Clear Runoff Volume (cu-ft)	725722.4404

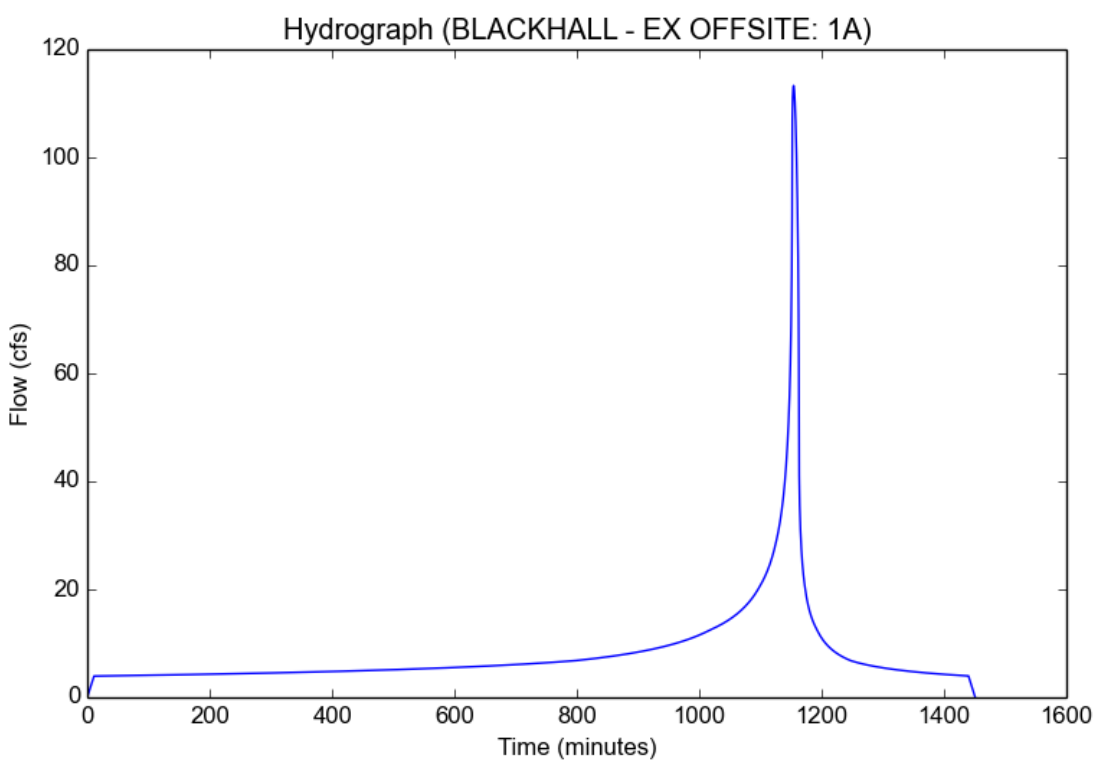

Peak Flow Hydrologic Analysis

File location: I:/Project Files/2026 - BLACKHALL STUDIOS/HYDROLOGY/OFFSITE/HYDROCALCS/BLACKHALL - EX OFFSITE Report - 97.pdf
Version: HydroCalc 1.0.3

Input Parameters

Project Name	BLACKHALL - EX OFFSITE
Subarea ID	2A
Area (ac)	36.7
Flow Path Length (ft)	2750.0
Flow Path Slope (vft/hft)	0.087
50-yr Rainfall Depth (in)	8.4
Percent Impervious	0.5
Soil Type	97
Design Storm Frequency	50-yr
Fire Factor	0
LID	False

Output Results

Modeled (50-yr) Rainfall Depth (in)	8.4
Peak Intensity (in/hr)	3.3211
Undeveloped Runoff Coefficient (Cu)	0.745
Developed Runoff Coefficient (Cd)	0.8225
Time of Concentration (min)	12.0
Clear Peak Flow Rate (cfs)	100.2504
Burned Peak Flow Rate (cfs)	100.2504
24-Hr Clear Runoff Volume (ac-ft)	14.7374
24-Hr Clear Runoff Volume (cu-ft)	641961.3312

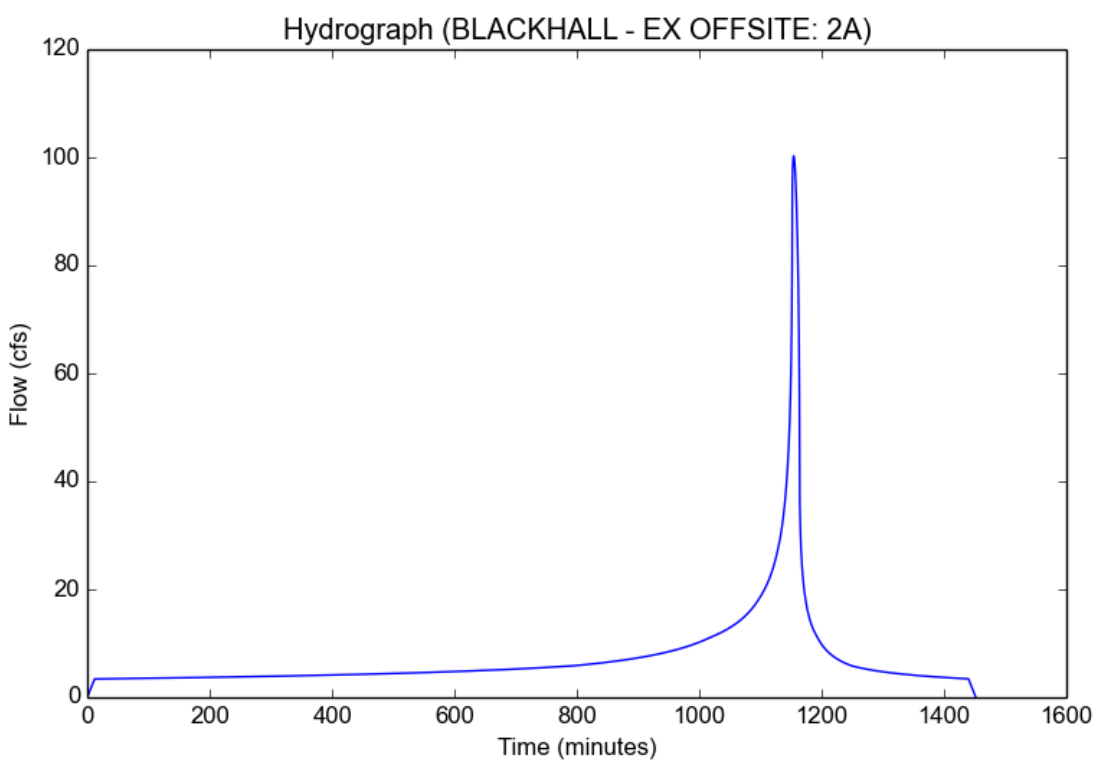

Peak Flow Hydrologic Analysis

File location: I:/Project Files/2026 - BLACKHALL STUDIOS/HYDROLOGY/OFFSITE/HYDROCALCS/BLACKHALL - EX OFFSITE Report - 97.pdf
Version: HydroCalc 1.0.3

Input Parameters

Project Name	BLACKHALL - EX OFFSITE
Subarea ID	3A
Area (ac)	29.2
Flow Path Length (ft)	1960.0
Flow Path Slope (vft/hft)	0.117
50-yr Rainfall Depth (in)	8.4
Percent Impervious	0.45
Soil Type	97
Design Storm Frequency	50-yr
Fire Factor	0
LID	False

Output Results

Modeled (50-yr) Rainfall Depth (in)	8.4
Peak Intensity (in/hr)	3.8019
Undeveloped Runoff Coefficient (Cu)	0.7622
Developed Runoff Coefficient (Cd)	0.8242
Time of Concentration (min)	9.0
Clear Peak Flow Rate (cfs)	91.5035
Burned Peak Flow Rate (cfs)	91.5035
24-Hr Clear Runoff Volume (ac-ft)	11.0772
24-Hr Clear Runoff Volume (cu-ft)	482522.9745

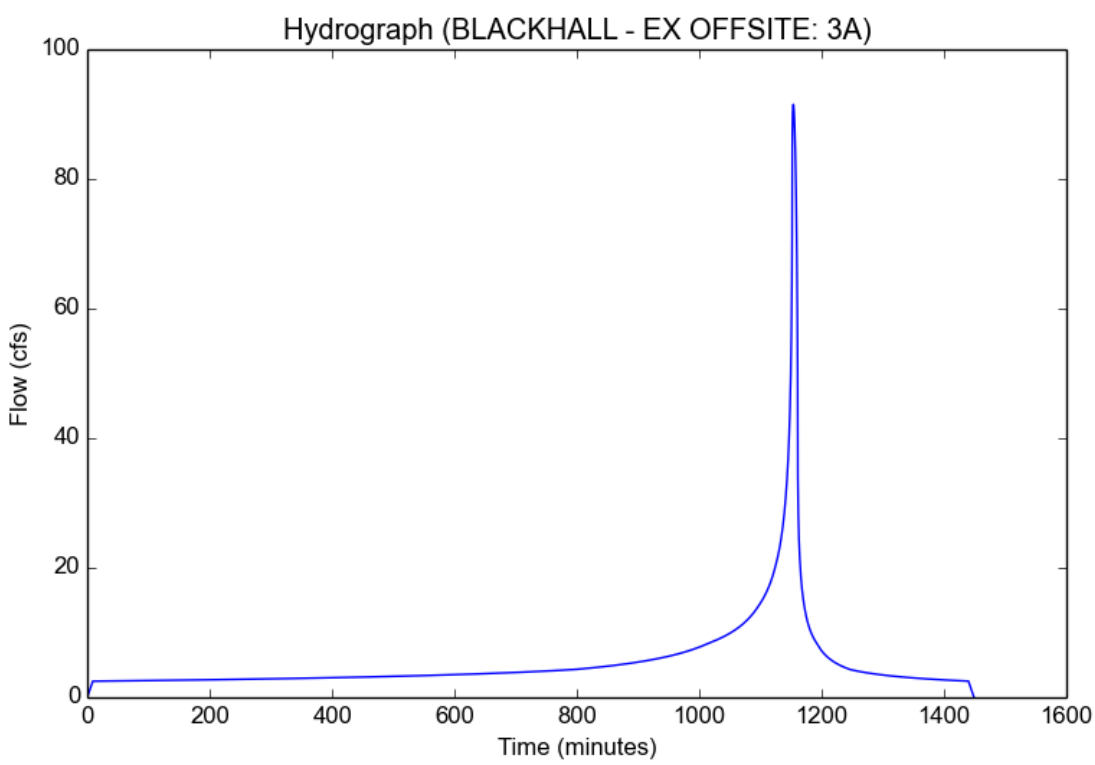

Peak Flow Hydrologic Analysis

File location: I:/Project Files/2026 - BLACKHALL STUDIOS/HYDROLOGY/OFFSITE/HYDROCALCS/BLACKHALL - EX OFFSITE Report - 97.pdf
Version: HydroCalc 1.0.3

Input Parameters

Project Name	BLACKHALL - EX OFFSITE
Subarea ID	4A
Area (ac)	26.0
Flow Path Length (ft)	1605.0
Flow Path Slope (vft/hft)	0.103
50-yr Rainfall Depth (in)	8.4
Percent Impervious	0.65
Soil Type	97
Design Storm Frequency	50-yr
Fire Factor	0
LID	False

Output Results

Modeled (50-yr) Rainfall Depth (in)	8.4
Peak Intensity (in/hr)	4.0183
Undeveloped Runoff Coefficient (Cu)	0.7685
Developed Runoff Coefficient (Cd)	0.854
Time of Concentration (min)	8.0
Clear Peak Flow Rate (cfs)	89.2209
Burned Peak Flow Rate (cfs)	89.2209
24-Hr Clear Runoff Volume (ac-ft)	12.1842
24-Hr Clear Runoff Volume (cu-ft)	530744.5816

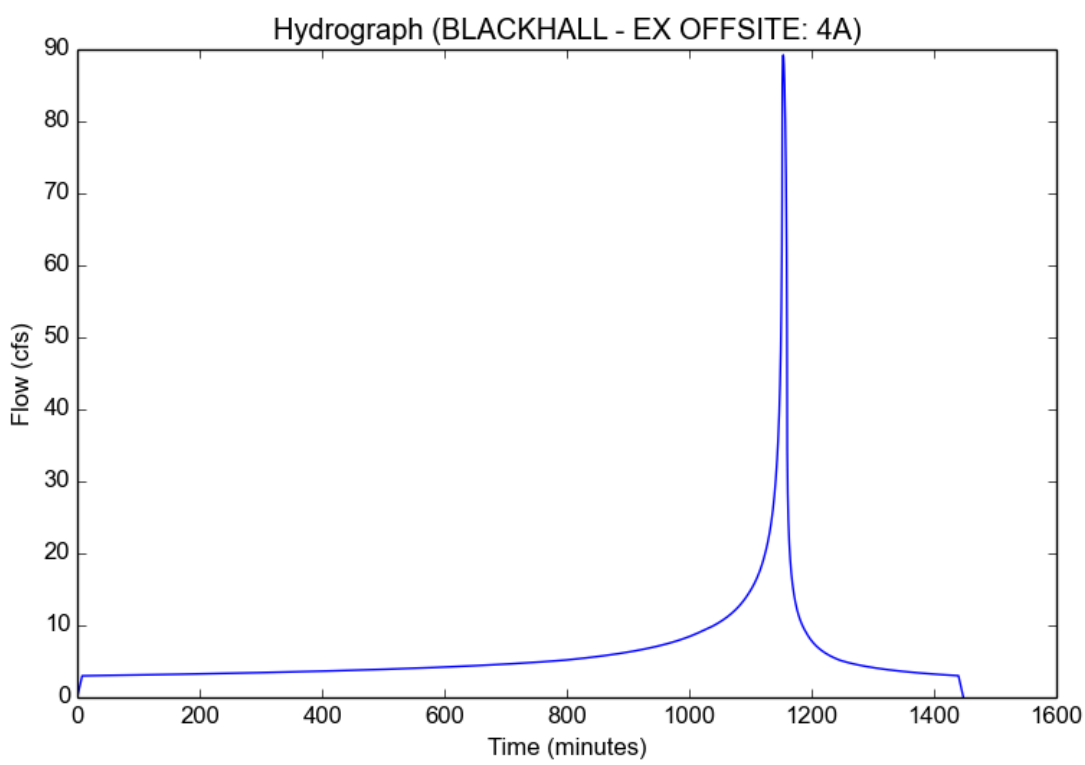

Peak Flow Hydrologic Analysis

File location: I:/Project Files/2026 - BLACKHALL STUDIOS/HYDROLOGY/OFFSITE/HYDROCALCS/BLACKHALL - EX OFFSITE Report - 97.pdf
Version: HydroCalc 1.0.3

Input Parameters

Project Name	BLACKHALL - EX OFFSITE
Subarea ID	5A
Area (ac)	38.5
Flow Path Length (ft)	2580.0
Flow Path Slope (vft/hft)	0.045
50-yr Rainfall Depth (in)	8.4
Percent Impervious	0.65
Soil Type	97
Design Storm Frequency	50-yr
Fire Factor	0
LID	False

Output Results

Modeled (50-yr) Rainfall Depth (in)	8.4
Peak Intensity (in/hr)	3.3211
Undeveloped Runoff Coefficient (Cu)	0.745
Developed Runoff Coefficient (Cd)	0.8458
Time of Concentration (min)	12.0
Clear Peak Flow Rate (cfs)	108.1401
Burned Peak Flow Rate (cfs)	108.1401
24-Hr Clear Runoff Volume (ac-ft)	18.0385
24-Hr Clear Runoff Volume (cu-ft)	785758.3918

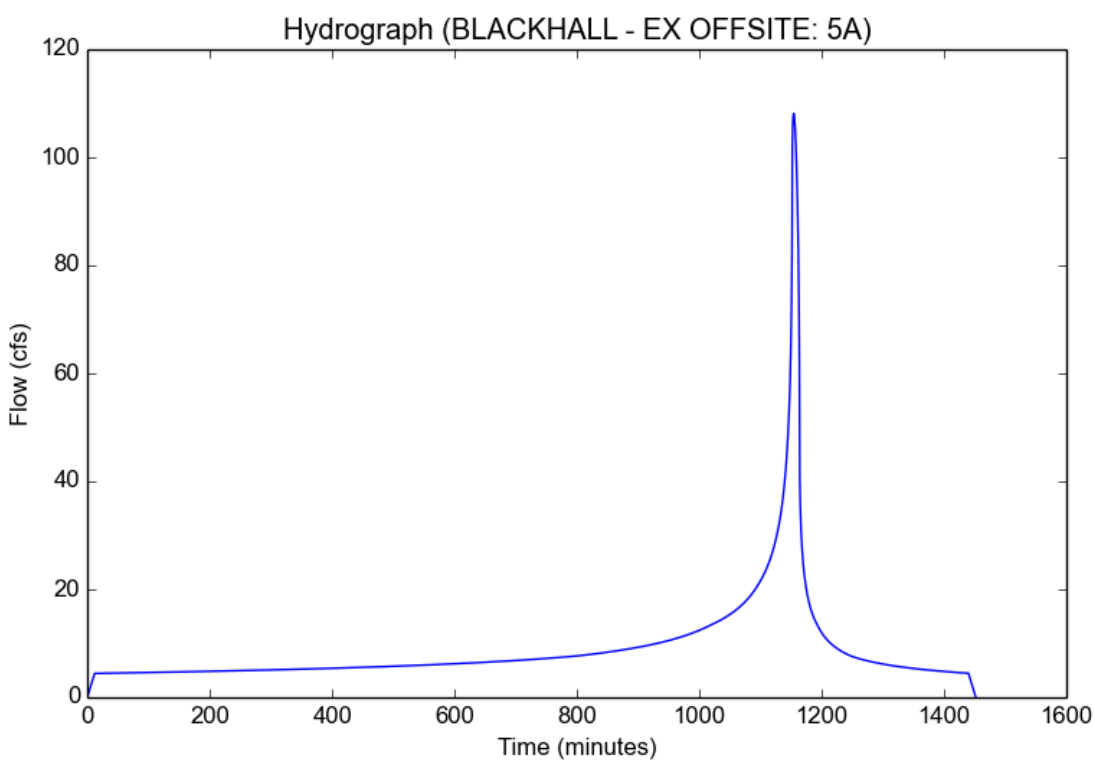

APPENDIX B

HYDROLOGIC MODELING OUTPUT

(LAR04 SOFTWARE)

BLACKHALL
OFFSITE

50-YEAR CLEAR

EXISTING CONDITION

```
006  2026    1A  97 5539.311A423 1080001400                 0  G1
006  2026    2A  97 5036.712A423915.0001100                 0
006  2026    3A  97 4529.2 9A423995.0001500                 0
006  2026    4A  97 6526.0 8A422 2180001100                 0
006  2026    5A  97 6538.512A424300.0003300                 02  2
```

Version 11.3, MODIFIED RATIONAL METHOD HYDROLOGY - STORM YEAR = 50 SOIL DATA FILE: C:\civild\scr_soilx_34.dat
BLACKHALL-EX OFFSITE 50-YEAR CLEAR STORM DAY 4

LOCATION		SUBAREA AREA(Ac)	SUBAREA Q(CFS)	TOTAL AREA(Ac)	TOTAL Q(CFS)	CONV TYPE	CONV LNGTH(Ft)	CONV SLOPE	CONV SIZE(Ft)	CONV Z	CONTROL Q(CFS)	SOIL NAME	TC	RAIN ZONE	PCT IMPV
2026	1A	39.3	112.86	39.3	112.86	3	1080.	.01400	.00	.00	0.	97	11	A42	.55
2026	2A	36.7	99.83	76.0	200.99	4	915.	.01100	4.50	.00	0.	97	12	A42	.50
2026	3A	29.2	90.83	105.2	275.38	4	995.	.01500	4.75	.00	0.	97	9	A42	.45
2026	4A	26.0	88.09	131.2	335.62	2	2180.	.01100	.00	.00	0.	97	8	A42	.65
2026	5A	38.5	107.66	169.7	368.93	4	300.	.03300	4.50	.00	0.	97	12	A42	.65

THE LAR04 PROGRAM OVERRIDED THE USER INPUT FOR 3A'S CONVEYANCE TYPE. THE USER ENTERED VALUE OF 3 (STREET FLOW) WAS CHANGED TO 4 (CIRCULAR PIPE OR IF STREET FLOW IS UNDESIRABLE)

Version 11.3, MODIFIED RATIONAL METHOD HYDROLOGY - STORM YEAR = 50 SOIL DATA FILE:
BLACKHALL-EX OFFSITE 50-YEAR CLEAR
HYDROGRAPH AT 2026 5A STORM DAY 4 REDUCTION FACTOR = 1.000

TIME	Q	TIME	Q	TIME	Q	TIME	Q	TIME	Q
0	.00	100	17.63	200	18.23	300	19.20	400	20.26
500	21.54	600	23.13	700	25.14	800	27.84	900	32.79
1000	42.26	1050	53.73	1100	72.57	1110	82.05	1120	94.76
1130	112.89	1131	115.09	1132	117.31	1133	119.41	1134	121.53
1135	123.67	1136	125.68	1137	128.41	1138	131.19	1139	133.89
1140	136.88	1141	140.69	1142	144.66	1143	148.51	1144	152.53
1145	157.77	1146	163.23	1147	168.95	1148	175.15	1149	188.85
1150	203.26	1151	218.31	1152	234.02	1153	250.45	1154	261.54
1155	274.93	1156	291.58	1157	309.93	1158	329.58	1159	348.50
1160	364.64	1161	368.93	1162	367.90	1163	362.16	1164	350.91
1165	335.14	1166	324.10	1167	312.11	1168	298.81	1169	284.48
1170	269.16	1171	253.41	1172	237.41	1173	221.17	1174	206.05
1175	191.60	1176	178.28	1177	166.26	1178	155.33	1179	145.31
1180	136.44	1181	128.63	1182	121.61	1183	115.17	1184	109.41
1185	104.49	1186	99.76	1187	95.71	1188	91.84	1189	88.32
1190	85.16	1191	82.38	1192	79.78	1193	77.20	1194	75.00
1195	72.81	1196	71.05	1197	69.09	1198	67.44	1199	65.91
1200	64.46	1201	63.07	1202	61.75	1203	60.49	1204	59.28
1205	58.12	1206	57.02	1207	56.12	1208	54.93	1209	54.11
1210	53.32	1211	52.24	1212	51.54	1213	50.75	1214	49.98
1215	49.38	1216	48.64	1217	47.92	1218	47.22	1219	46.69
1220	46.18	1221	45.51	1222	44.86	1223	44.38	1224	43.76
1225	43.29	1226	42.85	1227	42.11	1228	41.70	1229	41.31
1230	40.92	1231	40.26	1232	39.92	1233	39.60	1234	39.10
1235	38.77	1236	38.28	1237	37.96	1238	37.49	1239	37.33
1240	36.86	1241	36.56	1242	36.12	1243	35.84	1244	35.56
1245	35.12	1246	34.85	1247	34.44	1248	34.34	1249	33.93
1250	33.68	1251	33.33	1252	33.10	1253	32.76	1254	32.53
1255	32.32	1256	31.99	1257	31.79	1258	31.60	1259	31.42
1260	31.11	1261	30.93	1262	30.76	1263	30.58	1264	30.29
1265	30.12	1266	29.96	1267	29.80	1268	29.65	1269	29.39
1270	29.26	1271	29.13	1272	28.88	1273	28.75	1274	28.62
1275	28.38	1276	28.39	1277	28.15	1278	28.03	1279	27.92
1280	27.70	1281	27.72	1282	27.50	1283	27.40	1284	27.30
1285	27.21	1286	26.99	1287	26.90	1288	26.82	1289	26.73
1290	26.65	1291	26.44	1292	26.36	1293	26.28	1294	26.21
1295	26.00	1296	25.92	1297	25.84	1298	25.76	1299	25.68
1300	25.60	1310	24.65	1320	23.91	1330	23.12	1340	22.48
1350	21.82	1360	21.32	1370	20.71	1380	20.30	1390	19.95
1400	19.46	1420	18.79	1440	18.10	1460	13.11	1500	13.11

TOTAL VOLUME THIS HYDROGRAPH = 70.48(Ac.Ft)

BLACKHALL
OFFSITE

DESIGN EVENT

EXISTING CONDITION

HYBRID OF
Q50 BURNED & Q50 CLEAR

```
006  2026    1A 297 5539.311A423 1080001400                 0  G1
006  2026    2A 297 5036.712A424915.0001100                 0
006  2026    3A 297 4529.2 9A423995.0001500                 0
006  2026    4A  97 6526.0 8A422 2180001100                 0
006  2026    5A  97 6538.512A424300.0003300                 02  2
```

Version 11.3, MODIFIED RATIONAL METHOD HYDROLOGY - STORM YEAR = 50 SOIL DATA FILE: C:\civild\scr_soilx_34.dat
BLACKHALL-EX OFFSITE 50-YEAR DESIGN STORM DAY 4

LOCATION		SUBAREA AREA(Ac)	SUBAREA Q(CFS)	TOTAL AREA(Ac)	TOTAL Q(CFS)	CONV TYPE	CONV LNGTH(Ft)	CONV SLOPE	CONV SIZE(Ft)	CONV Z	CONTROL Q(CFS)	SOIL NAME	TC	RAIN ZONE	PCT IMPV
2026	1A	39.3	114.94	39.3	114.94	3	1080.	.01400	.00	.00	0.	297	11	A42	.55
2026	2A	36.7	101.93	76.0	205.14	4	915.	.01100	4.50	.00	0.	297	12	A42	.50
2026	3A	29.2	92.83	105.2	281.13	4	995.	.01500	4.75	.00	0.	297	9	A42	.45
2026	4A	26.0	88.09	131.2	340.87	2	2180.	.01100	.00	.00	0.	97	8	A42	.65
2026	5A	38.5	107.66	169.7	374.54	4	300.	.03300	4.50	.00	0.	97	12	A42	.65

THE LAR04 PROGRAM OVERRIDED THE USER INPUT FOR 3A'S CONVEYANCE TYPE. THE USER ENTERED VALUE OF 3 (STREET FLOW) WAS CHANGED TO 4 (CIRCULAR PIPE OR IF STREET FLOW IS UNDESIRABLE)

LOS ANGELES COUNTY FLOOD CONTROL DISTRICT

PROG F0601M

Version 11.3, MODIFIED RATIONAL METHOD HYDROLOGY - STORM YEAR = 50 SOIL DATA FILE:
BLACKHALL-EX OFFSITE 50-YEAR DESIGN
HYDROGRAPH AT 2026 5A STORM DAY 4 REDUCTION FACTOR = 1.000

TIME	Q	TIME	Q	TIME	Q	TIME	Q	TIME	Q
0	.00	100	18.34	200	18.97	300	19.97	400	21.08
500	22.41	600	24.06	700	26.17	800	28.98	900	34.07
1000	43.70	1050	55.41	1100	74.56	1110	84.17	1120	97.14
1130	115.55	1131	117.78	1132	120.02	1133	122.15	1134	124.30
1135	126.46	1136	128.50	1137	131.26	1138	134.07	1139	136.81
1140	139.85	1141	143.71	1142	147.72	1143	151.62	1144	155.68
1145	160.97	1146	166.49	1147	172.28	1148	178.54	1149	192.31
1150	206.81	1151	221.97	1152	237.79	1153	254.36	1154	265.68
1155	279.36	1156	296.33	1157	314.99	1158	334.89	1159	353.99
1160	370.22	1161	374.54	1162	373.53	1163	367.80	1164	356.51
1165	340.70	1166	329.60	1167	317.49	1168	303.99	1169	289.42
1170	273.78	1171	257.70	1172	241.33	1173	224.78	1174	209.32
1175	194.64	1176	181.11	1177	168.92	1178	157.82	1179	147.67
1180	138.71	1181	130.81	1182	123.73	1183	117.23	1184	111.43
1185	106.47	1186	101.68	1187	97.59	1188	93.68	1189	90.16
1190	86.97	1191	84.15	1192	81.53	1193	78.94	1194	76.73
1195	74.52	1196	72.74	1197	70.76	1198	69.11	1199	67.57
1200	66.10	1201	64.70	1202	63.36	1203	62.09	1204	60.87
1205	59.70	1206	58.58	1207	57.67	1208	56.47	1209	55.63
1210	54.83	1211	53.75	1212	53.05	1213	52.25	1214	51.46
1215	50.85	1216	50.11	1217	49.38	1218	48.67	1219	48.13
1220	47.60	1221	46.93	1222	46.27	1223	45.78	1224	45.15
1225	44.68	1226	44.24	1227	43.49	1228	43.07	1229	42.67
1230	42.29	1231	41.62	1232	41.28	1233	40.94	1234	40.44
1235	40.10	1236	39.61	1237	39.28	1238	38.80	1239	38.64
1240	38.17	1241	37.86	1242	37.41	1243	37.12	1244	36.84
1245	36.39	1246	36.12	1247	35.70	1248	35.59	1249	35.18
1250	34.93	1251	34.57	1252	34.33	1253	33.98	1254	33.75
1255	33.53	1256	33.20	1257	33.00	1258	32.80	1259	32.61
1260	32.30	1261	32.12	1262	31.94	1263	31.76	1264	31.46
1265	31.29	1266	31.12	1267	30.96	1268	30.81	1269	30.54
1270	30.40	1271	30.27	1272	30.01	1273	29.88	1274	29.75
1275	29.51	1276	29.51	1277	29.27	1278	29.15	1279	29.04
1280	28.82	1281	28.83	1282	28.61	1283	28.50	1284	28.40
1285	28.31	1286	28.09	1287	28.00	1288	27.91	1289	27.82
1290	27.73	1291	27.52	1292	27.44	1293	27.36	1294	27.27
1295	27.06	1296	26.98	1297	26.89	1298	26.81	1299	26.73
1300	26.64	1310	25.65	1320	24.88	1330	24.07	1340	23.40
1350	22.71	1360	22.18	1370	21.55	1380	21.11	1390	20.74
1400	20.24	1420	19.55	1440	18.83	1460	13.81	1500	13.81

TOTAL VOLUME THIS HYDROGRAPH = 72.76(Ac.Ft)

APPENDIX C

HYDROLOGY EXHIBITS

BLACKHALL EXISTING OFFSITE CONDITION HYDROLOGY

7/18/22

LEGEND

	TRACT BOUNDARY
	DRAINAGE BASIN LIMITS
	SUBAREA BASIN LIMITS
TC	TIME OF CONCENTRATION (MIN.)
A	TRIBUTARY AREA (AC)
ΣA	CUMULATIVE TRIBUTARY AREA (AC)
Q_{50}	CLEAR SUBAREA FLOWRATE (CFS)
Q_{50B}	BURNED SUBAREA FLOWRATE (CFS)
ΣQ_{50}	CUMULATIVE FLOWRATE (CFS)
DPV	DEBRIS PRODUCED UPSTREAM THAT IS CONVEYED TO PROJECT BOUNDARY
	OVERLAND
	FLOWPATH
XX	DRAINAGE AREA DESIGNATION
XX.X	DRAINAGE AREA IN ACRES
	EXISTING DRAINAGE CHANNEL

DESIGN CRITERIA

STORM EVENT	50 YR
RAINFALL ISOHYET	8.4 IN
SOIL TYPE	097
DEBRIS PRODUCTION AREA	DPA-5 & 9

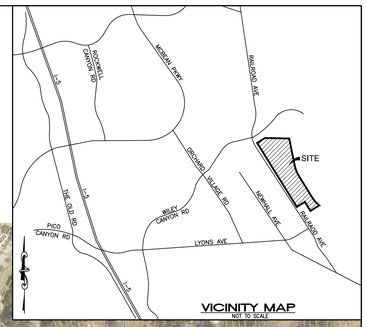

EXISTING OFFSITE CONDITION HYDROLOGIC PARAMETERS

SUBAREA	AREA	OVERLAND (Tc)		FLOWPATH		50-Yr RAIN	IMP	SOIL	DPA #	Tc
		LENGTH	SLOPE	LENGTH	SLOPE					50-YR
	ac	ft	ft/ft	ft	ft/ft	in	%			min
1A	39.3	2470	0.091	1080	0.014	8.40	55	97	5	11
2A	36.7	2750	0.087	915	0.011	8.40	50	97	5	12
3A	29.2	1960	0.117	995	0.015	8.40	45	97	5	9
4A	26.0	1605	0.103	2180	0.011	8.40	65	97	5	8
5A	38.5	2580	0.045	300	0.033	8.40	65	97	9	12

*NOTE THAT DEBRIS PRODUCING AREAS INSIDE OF SUBAREAS 1A THROUGH 4A DOES NOT MAKE IT DOWNSTREAM TO THE PROPOSED DESILTING INLET. ANY DEBRIS FROM THOSE NATURAL AREAS NOT HATCHED ABOVE WILL BE STOPPED BY FENCES, BUILDINGS, ROADS, FLAT AREAS, AND THE DESILTING INLET AT THE 12TH STREET STORM DRAIN AND WILL THEREFORE NOT BE CONVEYED DOWNSTREAM.

**THERE ARE NO EXISTING OFFSITE FLOODPLAINS AFFECTED BY THIS OFFSITE HYDROLOGY REPORT; NO OFFSITE CONSTRUCTION/IMPROVEMENTS ARE PROPOSED OTHER THAN THE STORM DRAIN CROSSING 12TH STREET AND 12TH STREET ITSELF.

ALLIANCE
LAND PLANNING & ENGINEERING INC.
CIVIL ENGINEERING • LAND PLANNING • HILLSIDE DESIGN • SURVEYING

2248 FARADAY AVE.
CARLSBAD, CA 92008
TEL: (760) 431-9896
FAX: (760) 431-8802

27413 TOURNEY ROAD
SUITE 120
VALENCIA, CA 91355
TEL: (661) 799-2760

PLANS PREPARED BY:
ALLIANCE LAND PLANNING & ENGINEERING INC.
2248 FARADAY AVE.
CARLSBAD, CA 92008
(760) 431-9896
PLANS PREPARED UNDER THE DIRECTION OF:
CRAIG M. WHITTEKER R.C.E. 51929 7/18/22 DATE

REGISTERED PROFESSIONAL ENGINEER CRAIG M. WHITTEKER No. 51929 EXP. 6-30-22 CIVIL STATE OF CALIFORNIA

NO.	DATE	REVISIONS	BY	APPR

SHEET 1 | CITY OF SANTA CLARITA | 1 SHEETS

BLACKHALL STUDIOS - SANTA CLARITA

EXISTING OFFSITE CONDITION HYDROLOGY

TENTATIVE TRACT MAP 083513

I:\CAD\2026\HYDROLOGY\2026_HYDRO_EX_OFFSITE_CONDITION_MAP.dwg

BLACKHALL STUDIOS

DEVELOPED CONDITION MTD XXXX HYDROLOGY EXHIBIT

7/19/22

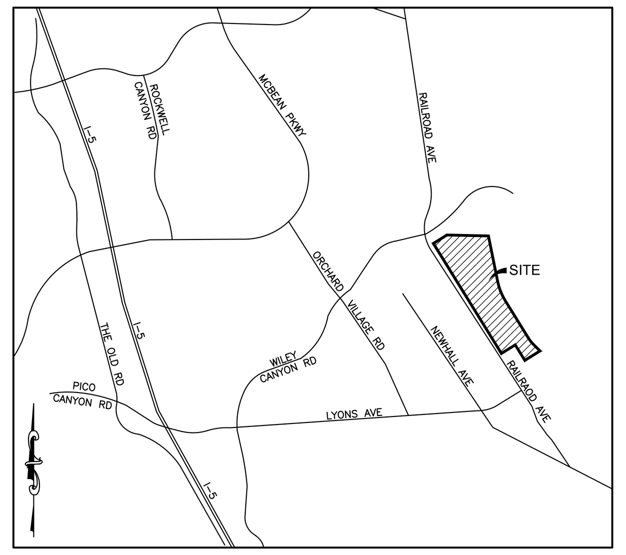

VICINITY MAP
NOT TO SCALE

LEGEND

Symbol	Description
(blue dashed line)	TRACT BOUNDARY
(blue solid line)	MTD XXXX
(magenta line)	CITY MAINTAINED PIPE
Q_{IN}	FLOWRATE INTO CITY/COUNTY SPLITTER MANHOLE (CFS)
Q_{OUT}	FLOWRATE CONTINUING THROUGH SPLITTER MANHOLE IN MTD XXXX TO PLACERITA CREEK (CFS)
Q_{CITY}	FLOWRATE GOING TO CITY PIPE FROM MTD XXXX (CFS)
ΣA	CUMULATIVE OFFSITE TRIBUTARY AREA (AC)
ΣQ_{50}	CUMULATIVE OFFSITE FLOWRATE (CFS)
DPV_{REQ}	DEBRIS PRODUCTION VOLUME REQUIRED (CY)
DPV_{PROV}	DEBRIS VOLUME PROVIDED (CY)
(green dashed line)	FEMA 100-YR EFFECTIVE FLOODPLAIN
(yellow hatched box)	FEMA REGULATORY FLOODWAY LIMIT

DESIGN CRITERIA

STORM EVENT	50 YR
RAINFALL ISOHYET	8.4 IN
SOIL TYPE	097
DEBRIS PRODUCTION AREA	DPA - 9

ALLIANCE
LAND PLANNING & ENGINEERING INC.
2248 FARADAY AVE.
CARLSBAD, CA 92008
TEL: (760) 431-9896
FAX: (760) 431-8802
27413 TOURNEY ROAD
SUITE 120
VALENCIA, CA 91355
TEL: (661) 799-2760
CIVIL ENGINEERING • LAND PLANNING • HILLSIDE DESIGN • SURVEYING

PLANS PREPARED BY:
ALLIANCE LAND PLANNING & ENGINEERING INC.
2248 FARADAY AVE.
CARLSBAD, CA 92008
(760) 431-9896
PLANS PREPARED UNDER THE DIRECTION OF:
CRAIG M. WHITTEKER R.C.E. 51929
7/19/22
DATE

REGISTERED PROFESSIONAL ENGINEER
CRAIG M. WHITTEKER
NO. 51929
EXP 6-30-22
CIVIL
STATE OF CALIFORNIA

I:\CAD\2026\HYDRO&WQT\2026_COUNTY-ONSITE-HYDRO.dwg

APPENDIX I-3
USMP/LID REPORT

USMP/LID REPORT

City of Santa Clarita

Shadowbox Studios

TR 83513

Prepared For:
LA Railroad 93, LLC
1415 Constitution Road SE,
Atlanta, GA 30316

Prepared By:
Alliance Land Planning & Engineering, Inc.
2248 Faraday Ave.
Carlsbad, CA 92008

SEPTEMBER 15, 2022

JN 2026

City of
SANTA CLARITA
Engineering Services
Phone: (661) 286-4060
www.santa-clarita.com

SUSMP/LID INFORMATION

Date Received:

PROJECT INFORMATION	FOR STAFF USE ONLY
Project Name: Shadowbox Studios	Engineering Project No.: ENG
Project Description: Sound Stage Studios Project	Engineering Record No(s): USP
Tract No. (if any): 83513	
Project Size (acres): 93.5	

PROJECT LOCATION:	
APN(s):	Address (if assigned): NEC Railroad Ave and 13th Street
Latitude: 34°23'26.18"N	Longitude: 118°32'0.25"W

DEVELOPMENT INFORMATION

☒ New Development | or | ☐ Re-development

Type of Development:

- ☒ Project is > 1 ac and adds impervious area > 10,000 sf
- ☐ Single Family Hillside Home
- ☐ Industrial Park with > 10,000 sf
- ☐ Commercial Mall with > 10,000 sf
- ☐ Auto Service facility with > 5,000 sf
- ☐ Retail Gasoline outlets with > 5,000 sf
- ☐ Restaurants with > 5,000 sf
- ☒ Parking Lots with > 5,000 sf
- ☐ Street or Road construction with > 10,000 sf
- ☐ Near or discharging directly to a Significant Ecological Area (SEA)

Required Volume to be retained (SWQDv) : 215,577 cf	
Estimated Vol retained on site VIA INFILTRATION (SWQDv): 215,577 cf	% of required : 100 %
Estimated UNTREATED Volume on site (SWQDv):	% of required : %

Note : 1.5 factor x UNTREATED Volume is required for Alternative Compliance Volume

Estimated Alternative Compliance Volume (SWQDv):

Alternative Compliance Method used: (please check all that applies)

- ☐ Onsite biofiltration
- ☐ Offsite biofiltration / Location : _____
- ☐ Water re-use
- ☐ Others: _____

TABLE OF CONTENTS

PROJECT DESCRIPTION 1
METHODOLOGY 1
EXISTING CONDITION 1
DEVELOPED CONDITION 1
WATER QUALITY/DETENTION INFILTRATION BASIN & UNDERGROUND INFILTRATION CHAMBERS 2
INFILTRATION/SOILS 3
USMP SPECIFIC REQUIREMENTS 3
- HYDROMODIFICATION 3
- NATURAL AREAS 4
- STORMWATER POLLUTANTS OF CONCERN 4
- POLLUTANT REMOVAL 4
- SLOPES AND CHANNELS 4
- STORM DRAIN SYSTEM STENCILING AND PARKING 4
- OUTDOOR MATERIAL STORAGE AREAS 5
- PROPERLY DESIGN TRASH STORAGE AREAS 5
- LANDSCAPE/IRRIGATION PRACTICES 5
- BMP MAINTENANCE (O&M) 5

CONCLUSION 5

APPENDICES

Appendix A — HydroCalc Output

Appendix B — Low Flow Splitter Manning's Calculations

Appendix C — Basin and Underground Chambers Calculations

Appendix D — Soils Report

Appendix E — Operation & Maintenance Plan

Appendix F — Developed Condition USMP/LID Exhibit

PROJECT DESCRIPTION

The Shadowbox project is an approximately 93.5-acre studio project located in the City of Santa Clarita. The proposed project includes sound stages, parking lots, a utilities/facilities building, support buildings, an office building, landscaping, and hardscape. The project site is currently undeveloped land and is considered a Designated Project as greater than acre of land is to be disturbed and adds more than 10,000 sq-ft of impervious surface area. The project site is currently undeveloped land. Shadowbox is bordered by 13th Street, Arch street, and 12th Street to the South/Southeast, The existing homes off Alderbrook Drive to the North-East, existing homes to the North, and the Jan Heidt Newhall Station on the Southwest. The project ultimately discharges to Placerita Creek.

METHODOLOGY

Storm Event	= 85th %
Storm Depth	= 0.98"
Soil Classification Area	= 020

HydroCalc software was used to calculate the required stormwater quality design volume (SWQDv) and stormwater quality design flowrate (SWQDf) as prescribed per the Low Impact Development (LID) Standards Manual of the County of Los Angeles, Department of public Works (LACDPW). The 85th percentile design storm of 0.98 inches is determined from the LA County 85th Percentile Analysis Google Earth .KMZ file. The Soil Classification was acquired from the Newhall 50-yr, 24-hr Isohyetal map. See Appendix A for the full HydroCalcs.

EXISTING CONDITION

The main project site currently drains in a northwest direction and into either Placerita Creek or goes under the Metrolink railroad via two corrugated pipes which then convey stormwater into two RCB's that go under Railroad Avenue and connects to Newhall Creek. The section of the site north of Placerita Creek also drains to the northwest and conveys stormwater via corrugated pipes under the railroad and Railroad Avenue to connects to the South Fork of the Santa Clara River.

DEVELOPED CONDITION

In the proposed condition all runoff from the project will be captured in area drains and routed through underground storm drain systems which will outlet to Placerita Creek. Prior to discharging into Placerita Creek the first-flush runoff will be treated in either an underground infiltration chambers or an infiltration/drainage basin. The

project is separated into two drainage areas. The “main site” south of Placerita Creek will be treated in a privately maintained underground infiltration chambers system. The MWD property/ parking lot and the parking lot that is North of the creek will be treated in a City maintained drainage/infiltration basin that will double as a detention basin during large storm events.

WATER QUALITY/DETENTION INFILTRATION BASIN & UNDERGROUND INFILTRATION CHAMBERS

The MWD lot and the parking lot North of the creek will be treated by a water quality infiltration/drainage basin. The two tables below summarize the performance of this basin. See the full volume calculations in the Shadowbox Studios Hydrology report.

INFILTRATION/DRAINAGE BASIN SUMMARY	
	ac-ft
SWQDv	1.48
DETENTION VOL REQ	15.96
TOTAL VOL REQ	17.44
VOL PROV	17.56

INFILTRATION/DRAINAGE BASIN	ac-ft
REQ WQT VOL	1.48
PROV WQT VOL (AT DEPTH OF 1.75 FT)	1.70
Δ	0.22

The section of the project site that is South of the creek will be treated by underground infiltration chambers. The table below summarizes the performance of these chambers.

UNDERGROUND INFILTRATION CHAMBERS SUMMARY	
	ac-ft
SWQDv	3.47
DETENTION VOL REQ	0
TOTAL VOL REQ	3.47
VOL PROV	3.51

The table below summarizes the total detention and water quality volumes.

TOTAL WQT/DETENTION SUMMARY	
	ac-ft
SWQDv	4.95
DETENTION VOL REQ	20.95
TOTAL VOL REQ	20.95
TOTAL VOL DETAINED	21.07

*Stormwater detained for treatment counts towards hydromod detention volume.

INFILTRATION/SOILS

Per the soils report in Appendix D, the design infiltration rate is 31.1 in/hr and 11.39 in/hr for the infiltration/drainage basin and the underground chambers respectively. The engineer used an infiltration rate of 5 in/hr for the basin to be conservative in the flow thru calculation for the basin volume. See the hydrology report for a breakdown of these calculations.

USMP SPECIFIC REQUIREMENTS

The following list discusses additional aspects of the project's SUSMP specific requirements:

HYDROMODIFICATION

The project is required to do hydromodification. The 10-year volume difference of 20.95 ac-ft is sufficient to meet hydromodification requirements. See the tables above and the 10-YR Clear table below for the breakdown.

10-YR CLEAR			
VOLUME (AC-FT)	EX	DEV	Δ
	9.39	30.34	20.95

NATURAL AREAS

The existing site is an undeveloped dirt lot with some natural hillside. The site is designed to conserver natural areas where possible.

STORMWATER POLLUTANTS OF CONCERN

The primary pollutants of concern anticipated for this project are associated with landscaped areas, private driveways, buildings, and trash enclosures. These pollutants have been listed below for regions both on-site and downstream of the proposed development.

Pollutants of concern:

Pathogens; nutrients; pesticides; organic compounds; oxygen demanding substances; trash and debris; oils and grease; sediments; and metals. No legacy pollutants are present.

POLLUTANT REMOVAL

The infiltration/drainage basin will remove trash and debris, sediment, metals, bacteria, oil and grease, nutrients, and organics with high effectiveness. The underground chambers remove nutrients at low effectiveness and bacteria with medium effectiveness. However, it removes everything else with high effectiveness. The effectiveness is per CASQA's BMP handbook on New Development and Redevelopment sections on Infiltration Basins and Media Filters.

SLOPES AND CHANNELS

There is a drainage ditch that runs through the eastern edge of the project site, and it will be routed through an underground storm drain system and sent to Placerita Creek. Placerita Creek runs through a significant portion of the site and is where the site ultimately discharges stormwater. The creek is to be preserved within most of the CDFW jurisdictional limits. The one exception is a bridge that will connect the north and south sides of the river. See Landscape Irrigation Practices section below for info on how natural slope will be conserved.

STORM DRAIN SYSTEM STENCILING AND PARKING

Multiple Catch Basins are proposed for this Shadowbox Studios project. "NO DUMPING. DRAINS TO RIVER" stencils will be painted at the catch basin drain locations per the provided USMP Map. Flowpath lengths from

parking areas to catch basin inlets have been minimized where possible to reduce contact time with AC paving. The total number of parking stalls provided is based on the project type and site requirements while being near the minimum for this calculation.

OUTDOOR MATERIAL STORAGE AREAS

No outdoor material storage areas are proposed for this project.

PROPERLY DESIGN TRASH STORAGE AREAS

Trash storage areas are proposed for the project and will have three (3) side walls and covered roofs per the City of Santa Clarita guidelines. This is done to prevent contact with stormwater.

LANDSCAPE/IRRIGATION PRACTICES

Landscaped areas are designed to minimize/eliminate runoff and the need for fertilizer/pesticides. Harvest and re-use are not feasible for this project due to use of drought resistant vegetation that is proposed by project landscape architect. They are also designed to include comprehensive irrigation systems that only water areas as needed to ensure healthy vegetation growth and to conserve natural areas.

BMP MAINTENANCE (O&M)

The infiltration/drainage basin is to be City Maintained and the underground infiltration chambers are to be privately maintained. See O&M Plans in Appendix E.

CONCLUSION

This report concludes that the Shadowbox Studios project is considered acceptable for development in terms of water quality design. All areas of development will be treated per methods outlined by the City of Santa Clarita. The analysis above shows the required water quality treatment flows to be adequately treated via the water quality treatment infiltration/drainage basins and underground infiltration chambers.

APPENDIX A

HydroCalc Output

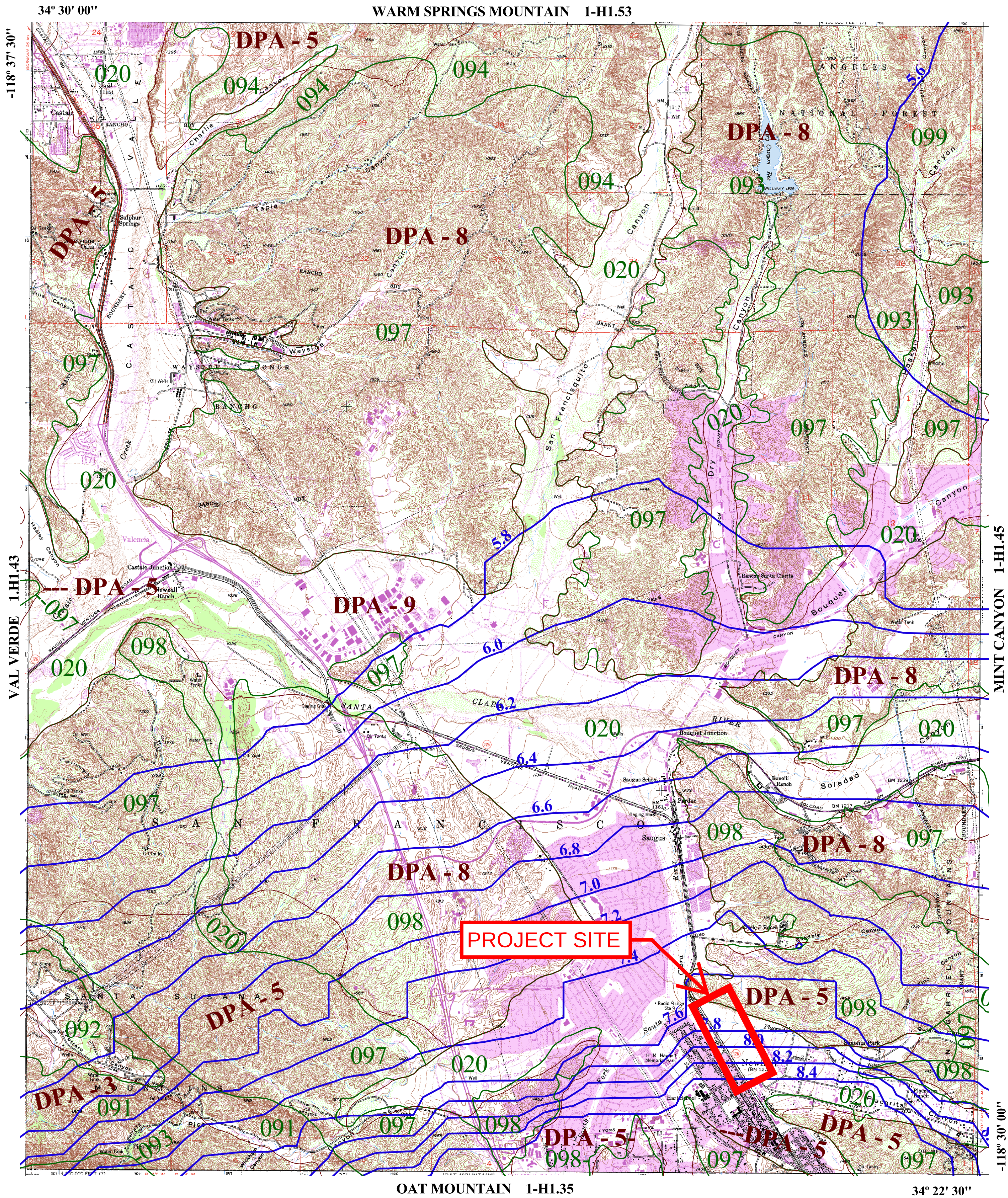

016	SOIL CLASSIFICATION AREA	
7.2	INCHES OF RAINFALL	
DPA - 6	DEBRIS POTENTIAL AREA	

Scale: 1 0 1 2 Miles

25-YEAR 24-HOUR ISOHYET REDUCTION FACTOR: 0.878
10-YEAR 24-HOUR ISOHYET REDUCTION FACTOR: 0.714

N E W H A L L 1-H1.44

50-YEAR 24-HOUR ISOHYET

LOS ANGELES COUNTY PUBLIC WORKS Public Service That Works

Peak Flow Hydrologic Analysis

File location: I:/Project Files/2026 - SHADOWBOX STUDIOS-SANTA CLARITA/USMP/HYDROCALC/SHADOWBOX - WQT Report_091522.pdf
Version: HydroCalc 1.0.3

Input Parameters

Project Name	SHADOWBOX - WQT
Subarea ID	1A
Area (ac)	11.9
Flow Path Length (ft)	1500.0
Flow Path Slope (vft/hft)	0.012
85th Percentile Rainfall Depth (in)	0.98
Percent Impervious	0.9
Soil Type	20
Design Storm Frequency	85th percentile storm
Fire Factor	0
LID	True

Output Results

Modeled (85th percentile storm) Rainfall Depth (in)	0.98
Peak Intensity (in/hr)	0.2
Undeveloped Runoff Coefficient (Cu)	0.1
Developed Runoff Coefficient (Cd)	0.82
Time of Concentration (min)	49.0
Clear Peak Flow Rate (cfs)	1.9517
Burned Peak Flow Rate (cfs)	1.9517
24-Hr Clear Runoff Volume (ac-ft)	0.7903
24-Hr Clear Runoff Volume (cu-ft)	34427.2917

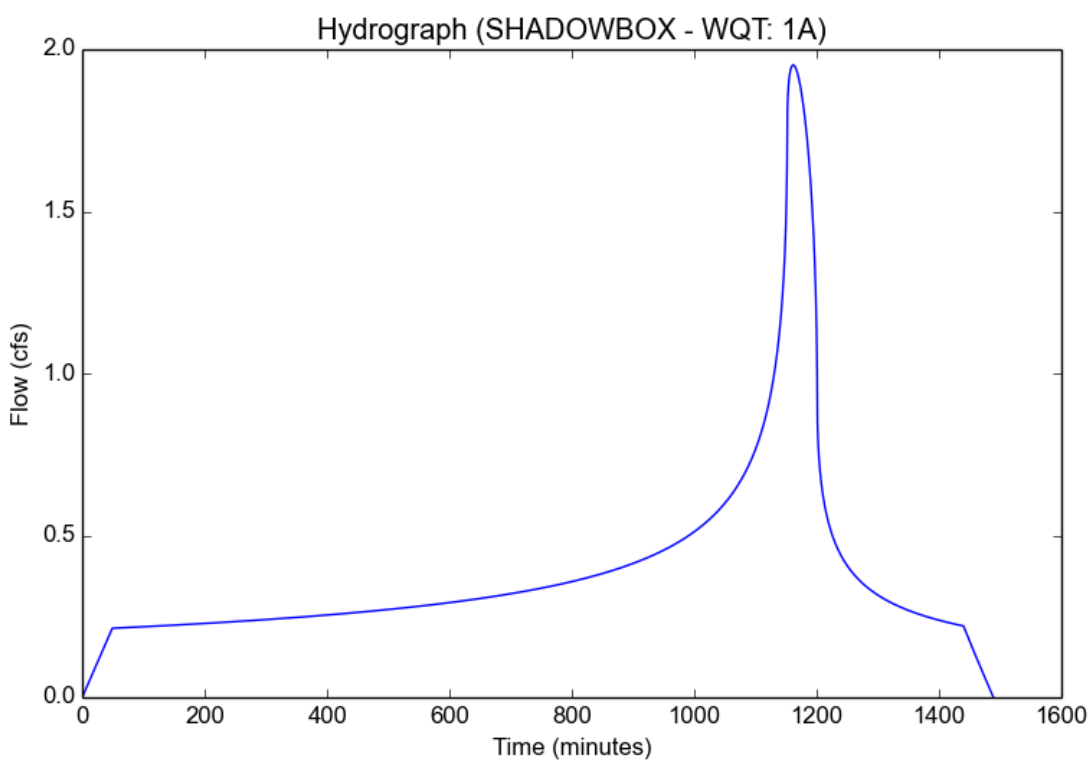

Peak Flow Hydrologic Analysis

File location: I:/Project Files/2026 - SHADOWBOX STUDIOS-SANTA CLARITA/USMP/HYDROCALC/SHADOWBOX - WQT Report_091522.pdf
Version: HydroCalc 1.0.3

Input Parameters

Project Name	SHADOWBOX - WQT
Subarea ID	2A
Area (ac)	31.2
Flow Path Length (ft)	2800.0
Flow Path Slope (vft/hft)	0.006
85th Percentile Rainfall Depth (in)	0.98
Percent Impervious	0.9
Soil Type	20
Design Storm Frequency	85th percentile storm
Fire Factor	0
LID	True

Output Results

Modeled (85th percentile storm) Rainfall Depth (in)	0.98
Peak Intensity (in/hr)	0.1561
Undeveloped Runoff Coefficient (Cu)	0.1
Developed Runoff Coefficient (Cd)	0.82
Time of Concentration (min)	83.0
Clear Peak Flow Rate (cfs)	3.9944
Burned Peak Flow Rate (cfs)	3.9944
24-Hr Clear Runoff Volume (ac-ft)	2.0723
24-Hr Clear Runoff Volume (cu-ft)	90268.5682

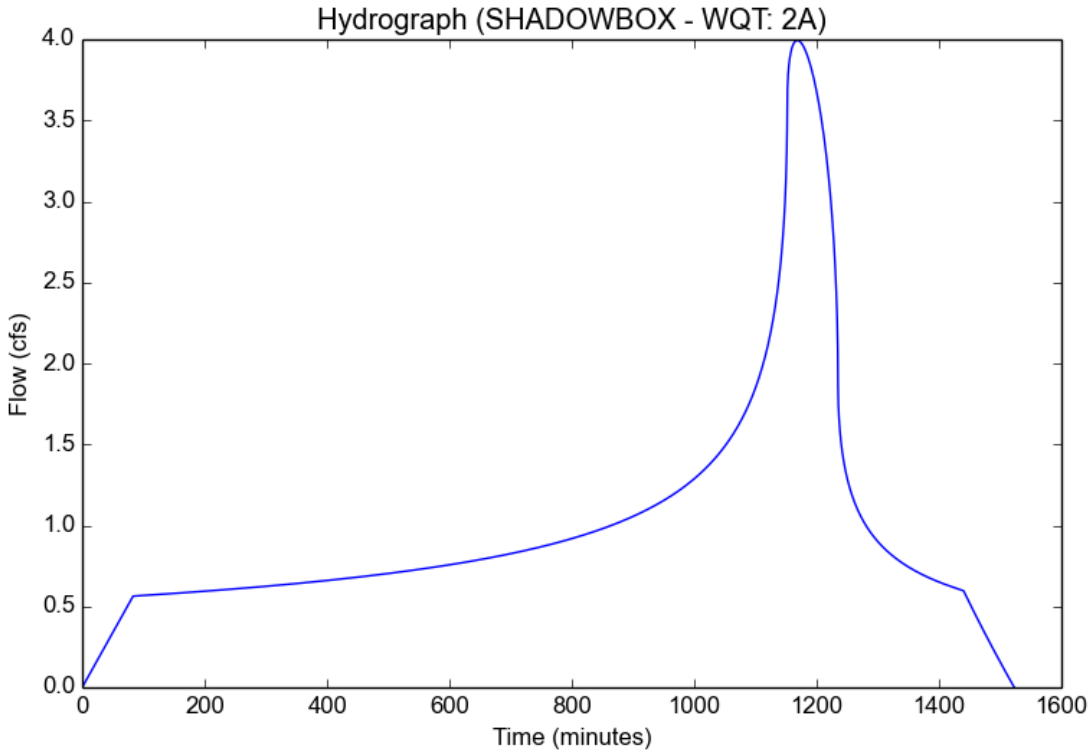

Peak Flow Hydrologic Analysis

File location: I:/Project Files/2026 - SHADOWBOX STUDIOS-SANTA CLARITA/USMP/HYDROCALC/SHADOWBOX - WQT Report_091522.pdf
Version: HydroCalc 1.0.3

Input Parameters

Project Name	SHADOWBOX - WQT
Subarea ID	3A
Area (ac)	9.1
Flow Path Length (ft)	2455.0
Flow Path Slope (vft/hft)	0.009
85th Percentile Rainfall Depth (in)	0.98
Percent Impervious	0.91
Soil Type	20
Design Storm Frequency	85th percentile storm
Fire Factor	0
LID	True

Output Results

Modeled (85th percentile storm) Rainfall Depth (in)	0.98
Peak Intensity (in/hr)	0.168
Undeveloped Runoff Coefficient (Cu)	0.1
Developed Runoff Coefficient (Cd)	0.828
Time of Concentration (min)	71.0
Clear Peak Flow Rate (cfs)	1.266
Burned Peak Flow Rate (cfs)	1.266
24-Hr Clear Runoff Volume (ac-ft)	0.6103
24-Hr Clear Runoff Volume (cu-ft)	26584.5308

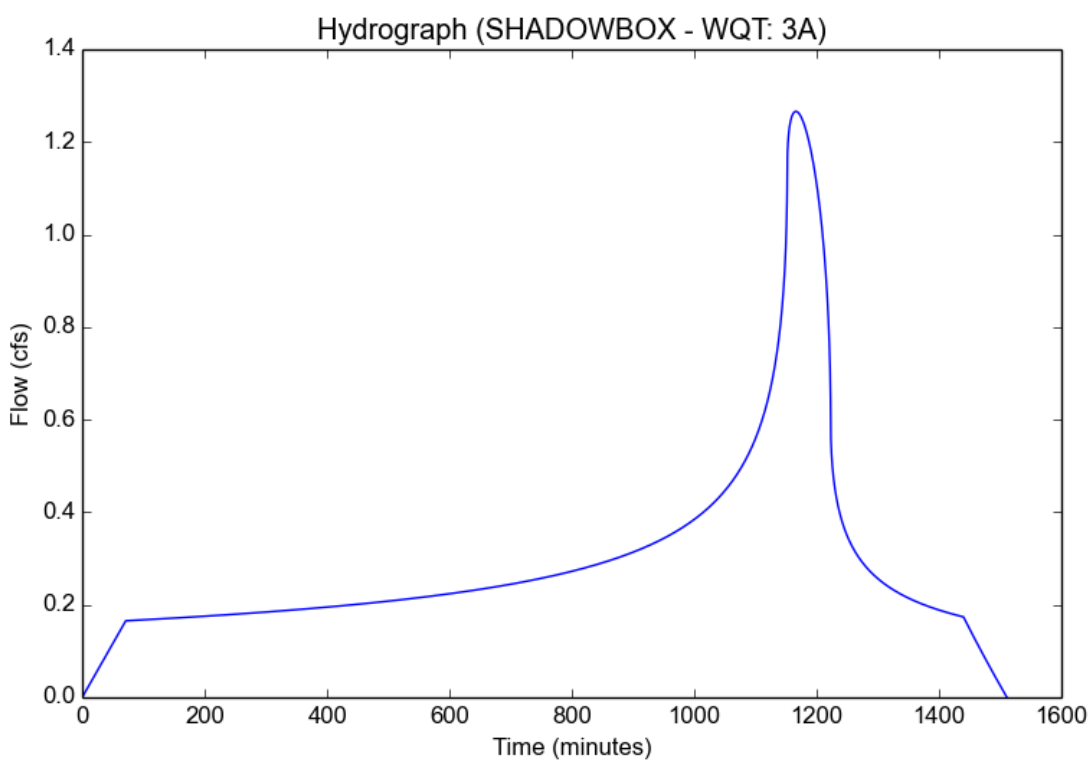

Peak Flow Hydrologic Analysis

File location: I:/Project Files/2026 - SHADOWBOX STUDIOS-SANTA CLARITA/USMP/HYDROCALC/SHADOWBOX - WQT Report_091522.pdf
Version: HydroCalc 1.0.3

Input Parameters

Project Name	SHADOWBOX - WQT
Subarea ID	1B
Area (ac)	9.8
Flow Path Length (ft)	2470.0
Flow Path Slope (vft/hft)	0.009
85th Percentile Rainfall Depth (in)	0.98
Percent Impervious	0.91
Soil Type	20
Design Storm Frequency	85th percentile storm
Fire Factor	0
LID	True

Output Results

Modeled (85th percentile storm) Rainfall Depth (in)	0.98
Peak Intensity (in/hr)	0.168
Undeveloped Runoff Coefficient (Cu)	0.1
Developed Runoff Coefficient (Cd)	0.828
Time of Concentration (min)	71.0
Clear Peak Flow Rate (cfs)	1.3634
Burned Peak Flow Rate (cfs)	1.3634
24-Hr Clear Runoff Volume (ac-ft)	0.6572
24-Hr Clear Runoff Volume (cu-ft)	28629.4948

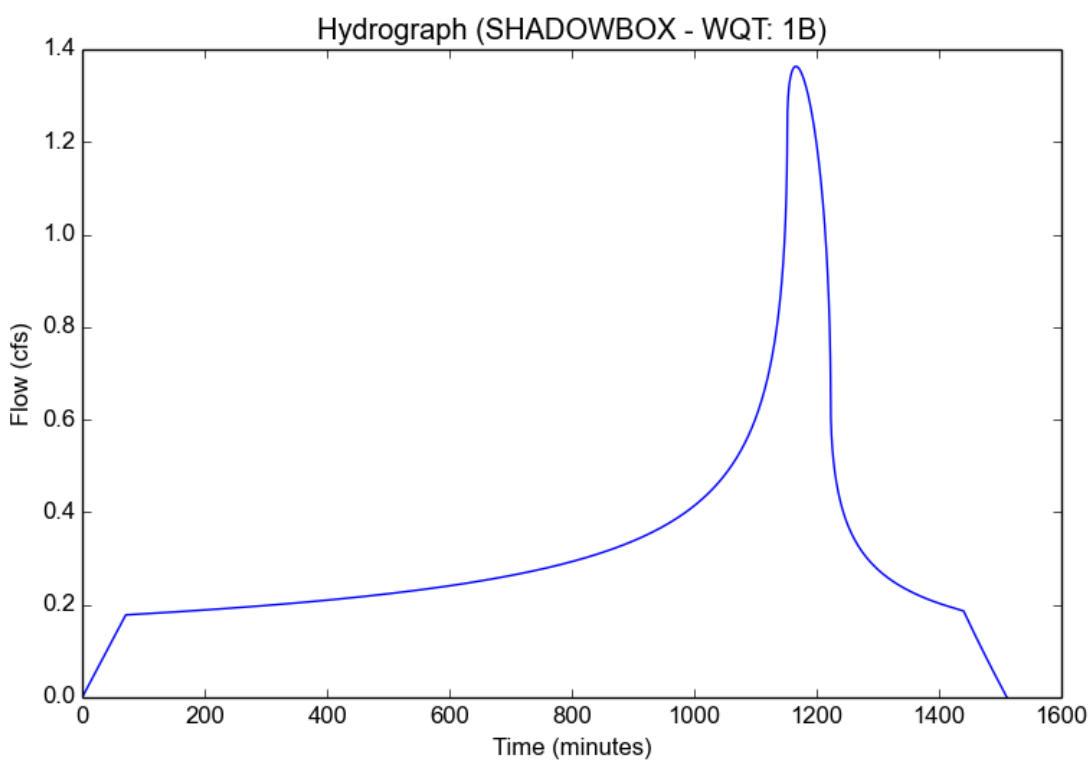

Peak Flow Hydrologic Analysis

File location: I:/Project Files/2026 - SHADOWBOX STUDIOS-SANTA CLARITA/USMP/HYDROCALC/SHADOWBOX - WQT Report_091522.pdf
Version: HydroCalc 1.0.3

Input Parameters

Project Name	SHADOWBOX - WQT
Subarea ID	2B
Area (ac)	12.7
Flow Path Length (ft)	1880.0
Flow Path Slope (vft/hft)	0.01
85th Percentile Rainfall Depth (in)	0.98
Percent Impervious	0.87
Soil Type	20
Design Storm Frequency	85th percentile storm
Fire Factor	0
LID	True

Output Results

Modeled (85th percentile storm) Rainfall Depth (in)	0.98
Peak Intensity (in/hr)	0.1819
Undeveloped Runoff Coefficient (Cu)	0.1
Developed Runoff Coefficient (Cd)	0.796
Time of Concentration (min)	60.0
Clear Peak Flow Rate (cfs)	1.8384
Burned Peak Flow Rate (cfs)	1.8384
24-Hr Clear Runoff Volume (ac-ft)	0.8188
24-Hr Clear Runoff Volume (cu-ft)	35666.9282

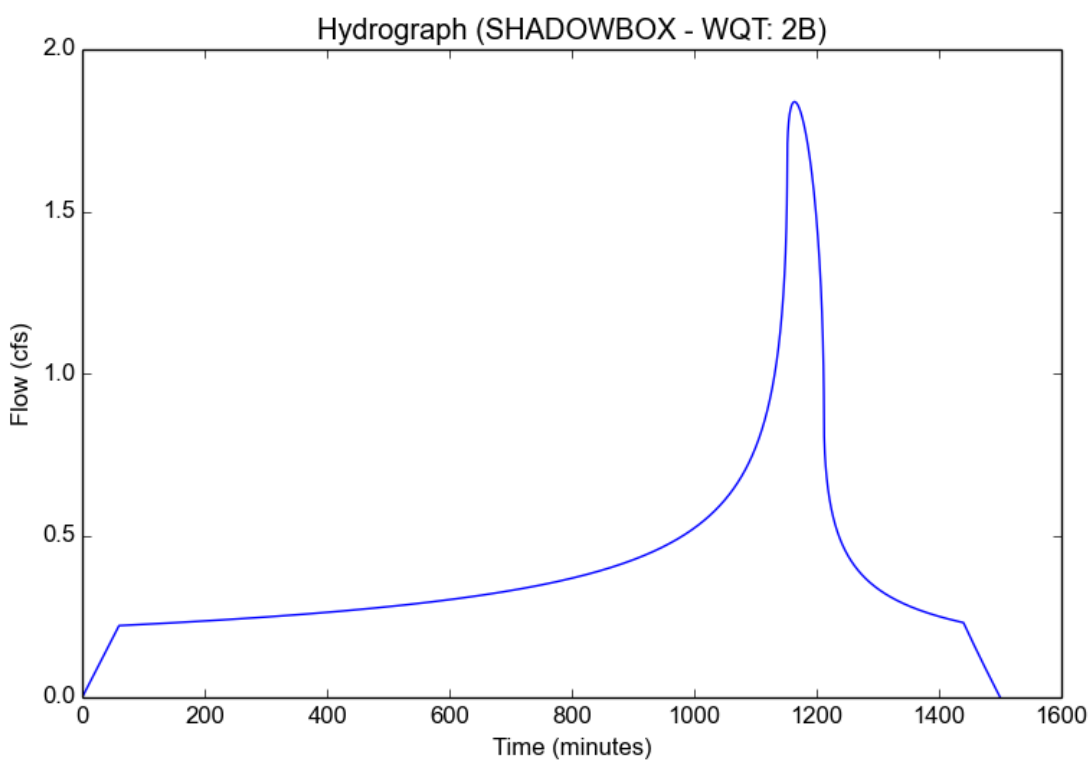

APPENDIX B

LOW FLOW SPLITTER
MANNING'S CALCULATIONS

Worksheet for 1A&2A

Project Description

Friction Method	Manning Formula
Solve For	Discharge

Input Data

Roughness Coefficient	0.012	
Channel Slope	0.60000	ft/ft
Normal Depth	0.66	ft
Diameter	0.66	ft

Results

Discharge	9.87	ft^3/s
Flow Area	0.34	ft^2
Wetted Perimeter	2.07	ft
Hydraulic Radius	0.17	ft
Top Width	0.00	ft
Critical Depth	0.66	ft
Percent Full	100.0	%
Critical Slope	0.60000	ft/ft
Velocity	28.85	ft/s
Velocity Head	12.94	ft
Specific Energy	13.60	ft
Froude Number	0.00	
Maximum Discharge	10.62	ft^3/s
Discharge Full	9.87	ft^3/s
Slope Full	0.60000	ft/ft
Flow Type	Critical	

GVF Input Data

Downstream Depth	0.00	ft
Length	0.00	ft
Number Of Steps	0	

GVF Output Data

Upstream Depth	0.00	ft
Profile Description		
Profile Headloss	0.00	ft
Average End Depth Over Rise	0.00	%
Normal Depth Over Rise	100.00	%
Downstream Velocity	Infinity	ft/s

Worksheet for 1A&2A

GVF Output Data

Upstream Velocity	Infinity	ft/s
Normal Depth	0.66	ft
Critical Depth	0.66	ft
Channel Slope	0.60000	ft/ft
Critical Slope	0.60000	ft/ft

Worksheet for 3A

Project Description

Friction Method	Manning Formula
Solve For	Discharge

Input Data

Roughness Coefficient	0.012	
Channel Slope	0.00500	ft/ft
Normal Depth	1.00	ft
Diameter	1.00	ft

Results

Discharge	2.73	ft^3/s
Flow Area	0.79	ft^2
Wetted Perimeter	3.14	ft
Hydraulic Radius	0.25	ft
Top Width	0.00	ft
Critical Depth	0.71	ft
Percent Full	100.0	%
Critical Slope	0.00692	ft/ft
Velocity	3.47	ft/s
Velocity Head	0.19	ft
Specific Energy	1.19	ft
Froude Number	0.00	
Maximum Discharge	2.94	ft^3/s
Discharge Full	2.73	ft^3/s
Slope Full	0.00500	ft/ft
Flow Type	SubCritical	

GVF Input Data

Downstream Depth	0.00	ft
Length	0.00	ft
Number Of Steps	0	

GVF Output Data

Upstream Depth	0.00	ft
Profile Description		
Profile Headloss	0.00	ft
Average End Depth Over Rise	0.00	%
Normal Depth Over Rise	100.00	%
Downstream Velocity	Infinity	ft/s

Worksheet for 3A

GVF Output Data

Upstream Velocity	Infinity	ft/s
Normal Depth	1.00	ft
Critical Depth	0.71	ft
Channel Slope	0.00500	ft/ft
Critical Slope	0.00692	ft/ft

Worksheet for 1A-3A

Project Description

Friction Method	Manning Formula
Solve For	Discharge

Input Data

Roughness Coefficient	0.012	
Channel Slope	0.00500	ft/ft
Normal Depth	1.50	ft
Diameter	1.50	ft

Results

Discharge	8.05	ft^3/s
Flow Area	1.77	ft^2
Wetted Perimeter	4.71	ft
Hydraulic Radius	0.38	ft
Top Width	0.00	ft
Critical Depth	1.10	ft
Percent Full	100.0	%
Critical Slope	0.00636	ft/ft
Velocity	4.55	ft/s
Velocity Head	0.32	ft
Specific Energy	1.82	ft
Froude Number	0.00	
Maximum Discharge	8.66	ft^3/s
Discharge Full	8.05	ft^3/s
Slope Full	0.00500	ft/ft
Flow Type	SubCritical	

GVF Input Data

Downstream Depth	0.00	ft
Length	0.00	ft
Number Of Steps	0	

GVF Output Data

Upstream Depth	0.00	ft
Profile Description		
Profile Headloss	0.00	ft
Average End Depth Over Rise	0.00	%
Normal Depth Over Rise	100.00	%
Downstream Velocity	Infinity	ft/s

Worksheet for 1A-3A

GVF Output Data

Upstream Velocity	Infinity	ft/s
Normal Depth	1.50	ft
Critical Depth	1.10	ft
Channel Slope	0.00500	ft/ft
Critical Slope	0.00636	ft/ft

APPENDIX C

Basin **&** **U**nderground **C**hamber
Calculations

BASIN	COMPONENT	TOP AREA	BTM AREA	MID (AVG) AREA	DEPTH	FACTOR	VOLUME PROVIDED	
		SF	SF	SF	FT	%	CF	AC-FT
NORTH PARKING LOT	PONDING	68,870	39,912	53,991	10.00	100	539910	12.39
	FLOW THRU VOL *					100	225000	5.17
					BASIN TOTAL		**764910**	17.56

* Flow through calculation is provided below

* ENGINEER FACTORED INFILTRATION RATE ASSUMED AT 5IN/HR
Q_24 = 5 IN/HR * [1 FT / 12 IN] * [1 HR / 60 MIN] * [1 MIN / 60 SEC] * 53,991 SF (MID AREA) = 6.25 CFS

THE DURATION OF A DESIGN STORM EVENT (1500 MIN) BUT NOT INCLUDING THE FIRST 900 MINUTES (TO BE CONSERVATIVE) IS 600 MINUTES OF INFILTRATION TIME.

6.25 CFS * [600 MINUTE * (60 SECONDS / 1 MINUTE)] = 2,250,000 CF = 5.17 AC-FT FLOWTHRU VOLUME THAT INFILTRATES AND THEREFORE LEAVES THE BASIN DURING THE DESIGN STORM EVENT.

HYDROMODIFICATION (AND WATER QUALITY) VOLUME PROVIDED	
LOCATION	AC-FT
VOL PROV UG CHAMBERS	3.51
VOL PROV DRAINAGE BASIN	17.56
TOTAL	21.07

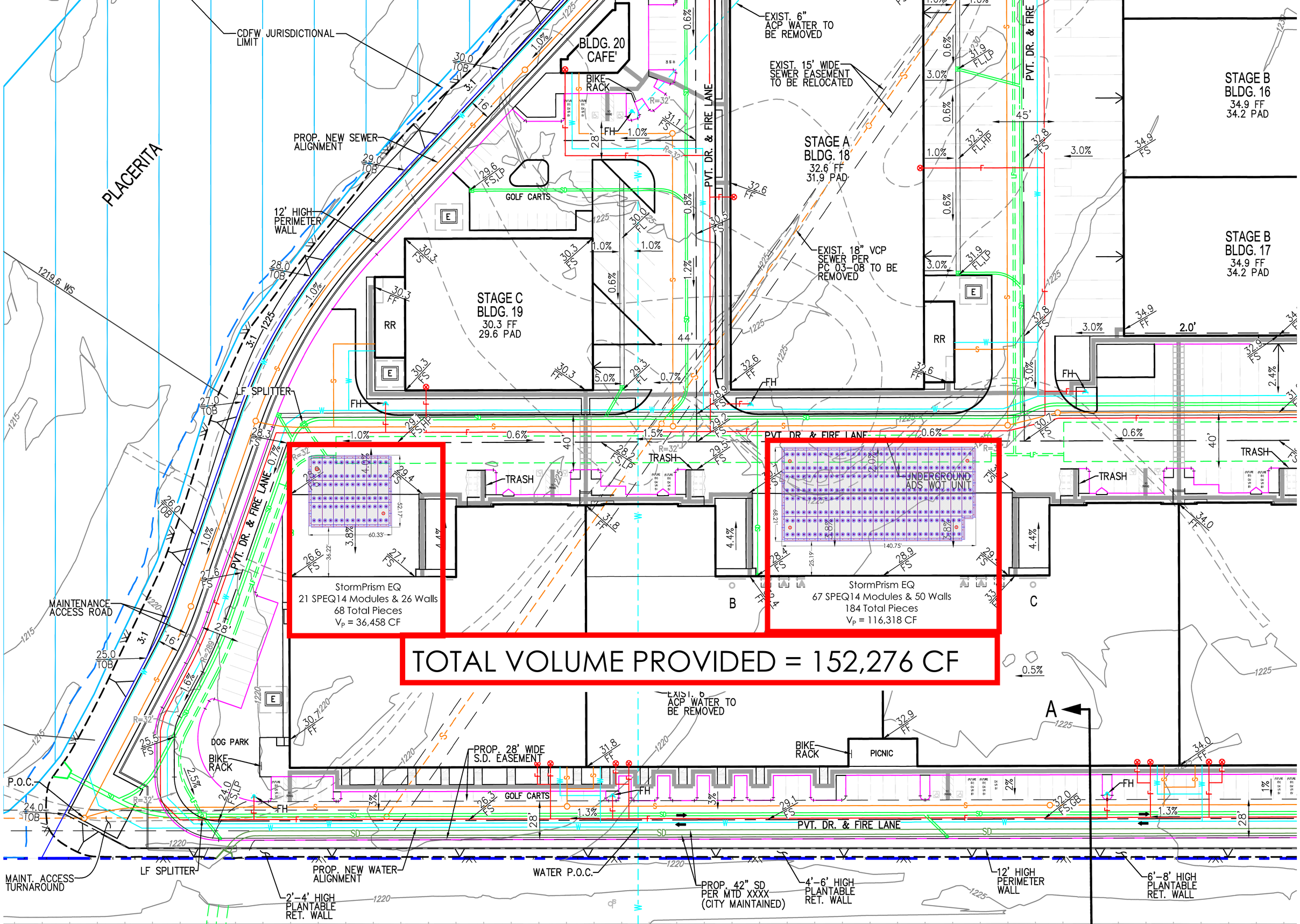
PLACERITA
CDFW JURISDICTIONAL LIMIT
BLDG. 20 CAFE'
BIKE RACK
PROP. NEW SEWER ALIGNMENT
12' HIGH PERIMETER WALL
GOLF CARTS
STAGE C BLDG. 19 30.3 FF 29.6 PAD
RR
LF SPLITTER
PVT. DR. & FIRE LANE
EXIST. 6" ACP WATER TO BE REMOVED
EXIST. 15' WIDE SEWER EASEMENT TO BE RELOCATED
STAGE A BLDG. 18 32.6 FF 31.9 PAD
EXIST. 18" VCP SEWER PER PC 03-08 TO BE REMOVED
STAGE B BLDG. 16 34.9 FF 34.2 PAD
STAGE B BLDG. 17 34.9 FF 34.2 PAD
TRASH
UNDERGROUND ADS WQT UNIT
StormPrism EQ
21 SPEQ14 Modules & 26 Walls
68 Total Pieces
V_P = 36,458 CF
StormPrism EQ
67 SPEQ14 Modules & 50 Walls
184 Total Pieces
V_P = 116,318 CF
TOTAL VOLUME PROVIDED = 152,276 CF
MAINTENANCE ACCESS ROAD
DOG PARK
P.O.C.
PROP. 28' WIDE S.D. EASEMENT
EXIST. 6" ACP WATER TO BE REMOVED
PICNIC
MAINT. ACCESS TURNAROUND
PROP. NEW WATER ALIGNMENT
WATER P.O.C.
PROP. 42" SD PER MTD XXXX (CITY MAINTAINED)
2'-4' HIGH PLANTABLE RET. WALL
4'-6' HIGH PLANTABLE RET. WALL
12' HIGH PERIMETER WALL
6'-8' HIGH PLANTABLE RET. WALL
A
B
C

INFILTRATION

SHEET INFORMATION	
SHEET No.	DESCRIPTION
1	COVER SHEET / GENERAL NOTES
2	NOTES
3	NOTES
4	NORTH EQ SYSTEM OVERVIEW
5	SOUTH EQ SYSTEM OVERVIEW
6	STORMPRISM 14'-0" UNIT DETAIL
7	STORMPRISM 14'-0" BASE
8	STORMPRISM 14'-0" TOP
9	FILTER INFORMATION
10	STORMPRISM 15'-4" WALL DETAIL
11	UNIT MANWAY OPENING AND LADDER INFORMATION
12	JOINT SEALING INFORMATION
13	ELEVATION INFORMATION

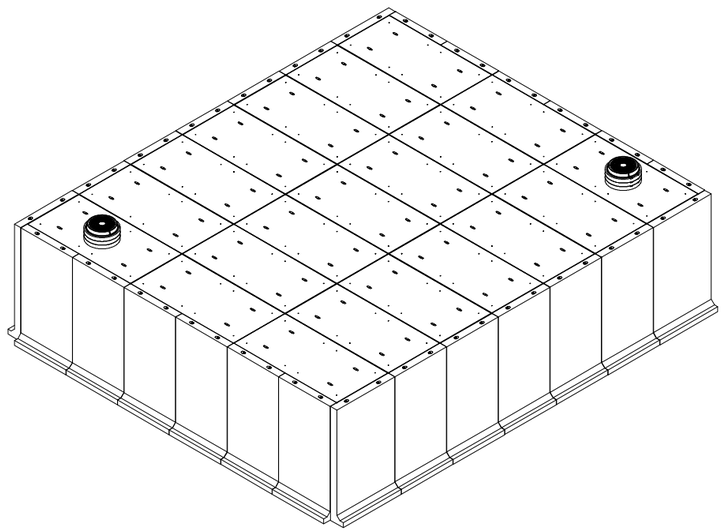

NORTH EQ SYSTEM
21 SPEQ, 14' MODULES
26 WALLS,
68 TOTAL PIECES
Vp=36,458 CF

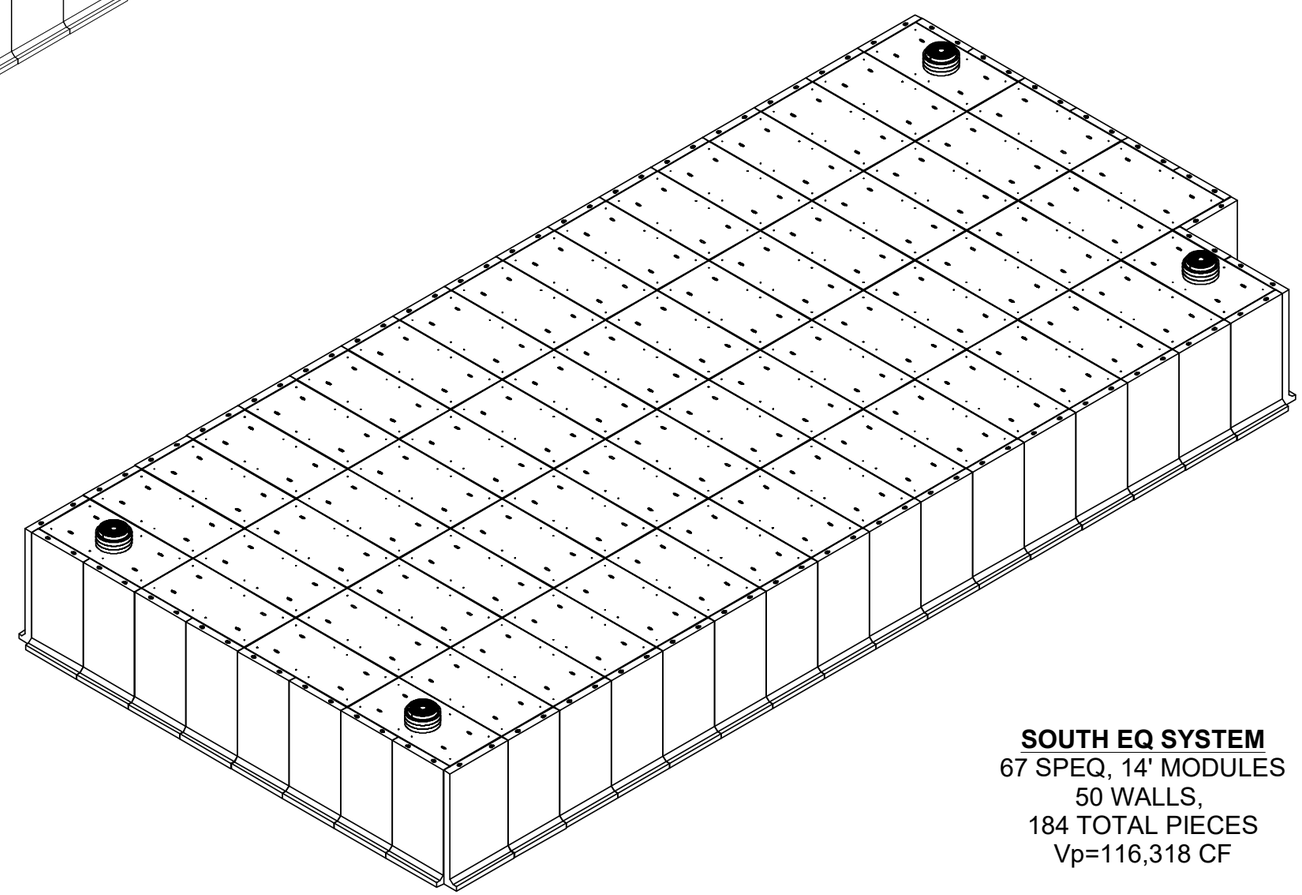

SOUTH EQ SYSTEM
67 SPEQ, 14' MODULES
50 WALLS,
184 TOTAL PIECES
Vp=116,318 CF

2/15/2022 REV.1

REVISIONS:

No.	DATE	DESCRIPTION

THE CONTENTS OF THESE DRAWINGS ARE THE PROPERTY OF PRECON PRODUCTS AND ARE PROPRIETARY AND CONFIDENTIAL. THESE DOCUMENTS SHALL NOT BE DISSEMINATED FOR ANY OTHER USE, WITHOUT THE WRITTEN CONSENT OF PRECON PRODUCTS. IF YOU RECEIVE THESE DRAWINGS IN ERROR, RETURN TO SENDER WITHOUT READING, COPYING OR DISCLOSING THE CONTENTS.

DO NOT SCALE

240 W. LOS ANGELESE AVE.
SIMI VALLEY, CA 93065
P: (805) 527-0841 F: (805) 584-0769,
WWW.PRE-CONPRODUCTS.COM

TITLE: STORMPRISM 14'-0" INFILTRATION SYSTEM SHADOWBOX STUDIOS

DRAWN BY: K.STRADER

DATE: 2/15/2022

SHEET: 1 OF 13

LOCATION: T:\Drawings\Vault\DESIGNS\Storm Prism\Customer\Blackhall Studios\14ft Infiltration System Blackhall Studios.dwg

Precon Products™ Guide Specification

Storm Prism™ EQ
for
Infiltration Systems

Released 03/02/2021

SECTION 33 46 23 - MODULAR BURIED STORMWATER STORAGE UNITS

PART 1 - GENERAL

1.01 SECTION INCLUDES

A. Storm Prism™ EQ precast concrete, modular, buried stormwater storage units and accessories.

1.02 SUMMARY

A. This Section includes the performance criteria, materials, design, production, and installation for precast concrete, modular, buried, stormwater storage units that together form an underground stormwater storage system. The Work performed under this Section includes all labor, materials, equipment, related services, and supervision required for the supply, installation and commissioning of the precast concrete, modular, buried, stormwater storage units formed into an underground stormwater storage system.

1.03 RELATED SECTIONS

A. Section 01 33 00 - Submittal Procedures
B. Section 31 00 00 - Earthwork
C. Section 03 40 00 - Precast Concrete

1.04 REFERENCE STANDARDS

A. American Association of State Highway Transportation Officials (AASHTO)

1. AASHTO - Standard Specifications for Highway Bridges, 17th Edition - 2002
2. AASHTO M105 - Standard Specifications for Gray Iron Castings
3. AASHTO M198 - Standard Specification for Joints for Concrete Pipe, Manholes, and Precast Box Sections Using Preformed Flexible Joint Sealants
4. AASHTO M288 - Standard Specification for Geosynthetic Specification for Highway Applications

B. American Concrete Institute (ACI)

1. ACI 318 - Building Code Requirements for Structural Concrete
2. ACI 350 - Code Requirements for Environmental Engineering Concrete Structures
3. ACI 350.3 - Seismic Design of Liquid-Containing Structures and Commentary

C. American Society for Testing and Materials (ASTM)

1. ASTM A48 - Standard Specification for Gray Iron Castings
2. ASTM A615 - Standard Specification for Deformed & Plain Carbon-Steel Bars for Concrete Reinforcement
3. ASTM A1064 - Standard Specification for Carbon-Steel Wire and Welded Wire Reinforcement, Plain and Deformed, for Concrete
4. ASTM C32 - Standard Specification for Sewer and Manhole Brick (Made form Clay or Shale)
5. ASTM C33 - Standard Specification for Concrete Aggregates
6. ASTM C139 - Standard Specification for Concrete Masonry Units for Construction of Catch Basins and Manholes
7. ASTM C150 - Standard Specification for Portland Cement
8. ASTM C478 - Standard Specification for Circular Precast Reinforced Concrete Manhole Sections
9. ASTM C595 - Standard Specification for Blended Hydraulic Cement
10. ASTM C857 - Standard Practice for Minimum Structural Design Loading for Underground Precast Concrete Utility Structures
11. ASTM C858 - Standard Specification for Underground Precast Concrete Utility Structures
12. ASTM C877 - Standard Specification for External Sealing Bands for Concrete Pipe, Manholes, and Precast Box Sections
13. ASTM C891 - Standard Practice for Installation of Underground Precast Concrete Utility Structures
14. ASTM C913 - Standard Specification for Precast Concrete Water and Wastewater Structures
15. ASTM C923 - Standard Specification for Resilient Connectors Between Reinforced Concrete Manhole Structures, Pipes, and Laterals
16. ASTM C990 - Standard Specification for Joints for Concrete Pipe, Manholes, and Precast Box Sections Using Preformed Flexible Joint Sealants
17. ASTM C1107 - Packaged Dry, Hydraulic Cement Grout (Non-Shrink)
18. ASTM C1478 - Standard Specification for Storm Drain Resilient Connectors Between reinforced Concrete Storm Sewer Structures, Pipes, and Laterals
19. ASTM C1675 - Standard Specification for Installation of Precast Reinforced Concrete Monolithic Box Sections for Culverts, Storm Drains, and Sewers
20. ASTM D448 - Standard Classification for Sizes of Aggregate for Road and Bridge Construction
21. ASTM D698 - Test Methods for Laboratory Compaction Characteristics of Soil Using Standard Effort
22. ASTM D545 - Standard Test Method for Preformed Expansion Joint Fillers for Concrete Construction (Nonextruding Resilient Types)
23. ASTM D1751 - Standard Specification for Preformed Expansion Joint Filler for Concrete Paving and Structural Construction (Nonextruding and Resilient Bituminous Types)
24. ASTM D2487 - Standard Practice for Classification of Soils for Engineering Purposes (Unified Soil Classification System)
25. ASTM D4014 - Standard Specification for Plain and Steel-Laminated Elastomeric Bearings for Bridges
26. ASTM D5992 - Standard Guide for Dynamic Testing of Vulcanized Rubber and Rubber-Like Materials Using Vibratory Methods
27. ASTM D7957 - Standard Specification for Solid Round Glass Fiber Reinforced Polymer Bars for Concrete Reinforcement
28. ASTM D8139 - Standard Specification for Semi-Rigid, Closed-Cell Polypropylene Foam, Preformed Expansion Joint Fillers for Concrete Pacing and Structural Construction
29. ASTM E1745 - Standard Specification for Plastic Water Vapor Retarders Used in Contact with Soil or Granular Fill Under Concrete Slabs
30. ASTM F2510 - Standard Specification for Resilient Connectors Between Reinforced Concrete Manhole Structures and Corrugated Dual- and Triple-Wall Polyethylene and Polypropylene Pipes

1.05 PERFORMANCE REQUIREMENTS

A. Structural Performance: Provide an underground stormwater storage system capable of withstanding design loads as indicated on the Plans and as detailed herein:

1. Dead Loads shall be determined using the following:

i. Soil load based on minimum and maximum depth of burial as indicated on the Plans using a minimum of 120 pcf for soil density.
ii. Lateral soil pressures to be based on a minimum “At Rest Earth Pressure” of 60 pcf.
iii. Other dead loads as indicated on the Plans.

2. Live Loads shall be determined using the following:

i. HS20 Loading per AASHTO - Standard Specifications for Highway Bridges, 17th Edition - 2002 based on the minimum and maximum depth of burial as indicated on the Plans. For burial depths less than two feet, a concentrated point load shall be utilized for the calculated live load.

3. Interior Water Load shall be determined using the following:

i. A minimum of 62.4 pcf water density at the maximum water storage depth as indicated on the Plans.

4. Maximum Soil Bearing Pressure shall be evaluated using the following:

i. Soil bearing capacities as determined by the Project Geotechnical Engineer or as listed in the Project Geotechnical Report.
ii. The maximum bearing pressure of the selected precast module.

5. Seismic Loads shall be based on the Plans and Project Geotechnical Report.

6. Other Loads (if any) shall be determined using the following:

i. As detailed on the Plans and Drawings or otherwise listed in the Specifications.

B. Water Storage Capacity: Provide an underground stormwater storage system with a minimum water storage capacity as indicated on the Plans or as indicated in the Water Quality Management Plan (WQMP). The storage volume shall reflect any necessary freeboard. Water detention times and water release rates shall not deviate from the requirements listed in the WQMP.
C. System Footprint: Provide an underground stormwater storage system with a footprint size as detailed on the Plans. Any deviation from the system footprint must be reconciled with the project Plans and Project WQMP.

1.06 DESIGN REQUIREMENTS

A. Structural precast concrete, modular, buried, stormwater storage units shall be designed in accordance with ACI 350, ACI 350.3, and ACI 318 latest addition and the details listed herein;

1. Wall thickness, and top slab thickness of the stormwater storage units shall conform to ACI 350 and ACI 318 and shall be no less than the minimum thickness necessary to sustain HS20 loading requirements as determined by a Licensed Professional Engineer.
2. Wall thickness, top slab thickness and bottom slab thickness of the stormwater storage system shall be no less than the minimum thickness necessary to sustain the expected soil loading based on the required burial depths for the Project as determined by a Licensed Professional Engineer.
3. Wet mix concrete or self-consolidating concrete (SCC) with a water/cement ratio of no greater than 0.40 shall be utilized for all precast and any field cast elements. Dry cast concrete shall not be allowed in order to maintain dimensional tolerances and to ensure adequate consolidation around heavy reinforcement.
4. The interior assembled floor of the stormwater storage system shall be flat to within ½" and shall not slope greater than 1%.
5. All vertical load bearing elements shall contain transverse reinforcement per ACI 350 and ACI 318 to provide confinement and ensure that spalling of the shell concrete does not result in a loss of axial load strength.
6. Access shall be provided for manned entry into the system. The access point(s) for ingress and egress shall be located in the system in such a manner that a point of egress shall be visible at all times by entry personnel from any location within the system.
7. The stormwater storage system shall be designed with no internal ledges, steps, slopes, walls, or other form of blockage between any interior space and at least one egress opening that may encumber access or retrieval of personnel or equipment.
8. Areas within the stormwater storage system with ingress and egress restrictions resulting in a 30% reduction in size of the standard interior height and/or width of the system and any step-over that is 3-inches in size or larger shall be considered separate compartments of the system and should be minimized. Each separate compartment shall require unique surface level ingress and egress points for safe access and exit from the system as well as to provide adequate air supply during manned entry.
9. ***(Specifier Note: Include this Section for Infiltration systems requiring internal filtration.)*** Stormwater storage systems designed for infiltration shall utilize a material and method internal to the System to prevent sediment from entering the rock voids of the bedding for the system. The material and method shall be maintainable and shall not restrict the hydraulic characteristics of the storage system in a 90% clogged condition.

1.07 QUALITY ASSURANCE

A. The precast concrete, modular, buried, stormwater storage units shall be manufactured at a precast concrete facility certified by the NPCA.
B. The materials, methods and completed concrete, subsurface, stormwater storage system(s) shall be subject to inspection by the Engineer. Acceptance or rejection of the system shall be based on the Specifications contained in this Section.

1.08 SUBMITTALS

A. Submittals shall conform to Section 01 33 00 - Submittal Procedures.
B. Action Submittals

1. Shop Drawings

i. Detail fabrication and installation of structural precast concrete units including joint interface at member ends and to each adjoining members.
ii. Indicate locations, plan views, elevations, dimensions, shapes, and cross sections of each unit, openings, support conditions and types of reinforcement, including special reinforcement.
iii. Detail loose and cast-in hardware, lifting and erection inserts, connections, and interface surfaces.
iv. Indicate location and details of joint treatment.
v. Designate and provide details for all separate compartments (if any) within the stormwater storage system as described in Section 1.06-A.10.

2. Concrete Design Mixtures

i. Include a submittal for each concrete design mixture including compressive strength.

3. Water Storage Sizing

i. Include supporting data to confirm the stormwater storage system is sized with sufficient water storage capacity per the Plans and Water Quality Management Plan (WQMP).
ii. Alternate stormwater storage systems to any Specified system shall supply a continuous simulation hydrologic model that supports the system is sized with sufficient water storage capacity, conforms to the required draw-down time, and conforms to the maximum release rates and other pertinent design parameters as detailed on the Plans and in the WQMP. The model and results shall be reviewed and require Approval by the Reviewing Agency prior to acceptance of an alternate system.

C. Informational Submittals

1. Material Test Reports

i. Aggregates: Material test reports shall be from an accredited agency indicating and interpreting test results for compliance with Reference Standards and Specifications as detailed herein.
ii. Compressive Strength: Concrete compressive strength test results shall be supplied for each batch of concrete utilized in the production of the precast concrete, modular, buried, stormwater storage units.

2. Material Certifications: Material certifications shall be signed by the Manufacturers certifying that each of the following items comply with the Reference Standards and Specifications as detailed herein.

i. Cementitious materials.
ii. Reinforcing materials.
iii. Admixtures.
iv. Bearing pads.
v. Sealants.

3. Operations and Maintenance Manual.

4. Installation Verification: The installation of the subsurface, stormwater storage system shall be verified by a Licensed Professional Engineer and a certification provided indicating that the system has been constructed and is in substantial conformance with the Approved Plans and WQMP.

1.09 DELIVERY, STORAGE, AND HANDLING

A. Deliver all precast concrete members in such quantities and at such times to assure compliance with the agreed upon Project schedule and setting sequence to ensure continuity of installation.
B. Transport and handle members in a manner to avoid excessive stresses that could cause cracking or other damage.
C. Store members with adequate dunnage and bracing, and protect units to prevent contact with soil, staining, and to control cracking, distortion, warping or other physical damage.
D. Store members with dunnage across the full width of each bearing point unless otherwise Specified or shown on the Shop Drawings.
E. Place stored members so identification marks are clearly visible and units can be inspected.
F. Place dunnage of even thickness between each member.
G. Members may be stacked according to the manufacturer's recommendation.
H. Lift and support members only at designated points indicated on the Shop Drawings. Do not drag, slide or push members.
I. Accessories:
1. Accessory components shall be delivered in the manufacturer's original, unopened packaging and/or containers with labels that clearly identify the make, model and manufacturer.
2. Accessory components shall be stored in a clean, dry area out of direct sunlight.

PART 2 - PRODUCTS
2.01 MANUFACTURER

A. Precon Products
240 West Los Angeles Avenue
Simi Valley, California 93065
Phone: (800) 882-3399
Email: info@pre-conproducts.com
Website: www.preconproducts.com

2.02 MODULAR BURIED STORMWATER STORAGE UNITS

A. All material shall meet or exceed the applicable standards referenced in this Specification and shall conform to all federal, state, and local requirements.
B. Precast Concrete Members
1. (Specifier Note: Select the appropriate configuration and delete all other configurations. Edit the font to standard font when completed.)
- Storm Prism™ EQ Single Module with modular, precast concrete, orifice base for infiltration.
- Storm Prism™ EQ Single Module with modular, precast concrete, pad footing for infiltration.
- Storm Prism™ EQ Single Module with modular, precast concrete, beam footing for infiltration.
- Storm Prism™ EQ Double Module with orifice base for infiltration.

REVISIONS:
No. DATE DESCRIPTION

THE CONTENTS OF THESE DRAWINGS ARE THE PROPERTY OF PRECON PRODUCTS AND ARE PRORIETARY AND CONFIDENTIAL. THESE DOCUMENTS SHALL NOT BE DISSEMINATED FOR ANY OTHER USE, WITHOUT THE WRITTEN CONSENT OF PRECON PRODUCTS. IF YOU RECEIVE THESE DRAWINGS IN ERROR, RETURN TO SENDER WITHOUT READING, COPYING OR DISCLOSING THE CONTENTS.

DO NOT SCALE

240 W. LOS ANGELESE AVE.
SIMI VALLEY, CA 93065
P: (805) 527-0841 F: (805) 584-0769,
WWW.PRE-CONPRODUCTS.COM

TITLE: NOTE
SHADOWBOX STUDIOS

DRAWN BY: K.STRADER

DATE: 2/15/2022

SHEET: 2 OF 13

LOCATION:T:\Drawings\Vault\DESIGNS\Storm Prism\Customer\Blackhall Studios\14ft Infiltration System Blackhall Studios.dwg

1. Cement shall be Type II/V Portland cement conforming to ASTM C 150.
2. Aggregate shall conform to ASTM C33, except that the requirement for gradation shall not apply.
3. Reinforcement shall consist of steel bar conforming to ASTM A615, Grade 60/80, glass fiber reinforced polymer bars conforming to ASTM D7957, or mesh conforming to ASTM A1064, Grade 60/80.
4. All sections shall be cured by an approved method. Sections shall not be shipped until the concrete has attained full design strength as determined by an American Concrete Institute Certified Laboratory Technician - Level 2 but in no case shall the compressive strength be less than 2,000 psi.
5. Pipe openings shall be sized to accept pipes of the specified size(s) and material(s), and shall be sealed by the Contractor with hydraulic cement grout conforming to ASTM C1107 or sealed by use of a Resilient Connector conforming to ASTM C923, C1478, or F2510.
6. Access risers and any necessary associated grade adjustments shall conform to ASTM A478 for round access risers and ASTM C857, C858, or C913 for square/rectangular access risers and shall provide for an access opening with a minimum dimension of 48-inches.
7. Castings for manhole frames and covers shall be in accordance with ASTM A48, CL.30B and AASHTO M105. The access cover/s shall be designed for HS20-44 traffic loading and shall provide a minimum of 30-inch clear opening.
8. Brick or masonry used to level the manhole frames and covers to finished grade shall conform to ASTM C32 or ASTM C139 and shall be installed in conformance with all local requirements.

(Specifier Note: Section C. for Field Poured Concrete Slabs is only necessary for certain configurations of the modular, buried, stormwater storage system. Delete this Section if the Field Poured Concrete Slab is not to be utilized.)

B. Field Poured Concrete Slab

1. The dimensions of the slab shall be as detailed on the Plans.
2. Cement shall be Type II/V Portland cement conforming to ASTM C 150 or blended hydraulic cement conforming to ASTM C595.
3. Aggregate shall conform to ASTM C33, except that the requirement for gradation shall not apply.
4. Reinforcement shall consist of bar conforming to ASTM A615, Grade 60/80 or mesh conforming to ASTM A1064, Grade 60/80.
5. All sections shall be cured by an approved method. Vertical construction shall not begin until the concrete has attained full design strength as determined by a Licensed Professional Engineer but in no case shall the compressive strength be less than 2,000 psi.

C. Accessory Components

1. Spacer for use between concrete members shall be a ½" thick x 4" wide closed-cell polypropylene foam conforming to ASTM D8139, ASTM D1751, and ASTM D545.
2. Joint sealer to span between concrete member roofs shall be a polyolefin backed exterior joint wrap conforming to ASTM C877.

D. Bedding, Backfill and Final Fill

1. Bedding Material: The bedding material for the precast concrete, modular, buried, stormwater storage system shall be a clean, washed, poorly graded, free-draining, angular faced, crushed aggregate conforming to ASTM D448, classification size No. 6 or No. 67. The bedding material shall be a minimum of 6-inches deep and shall extend beyond the footprint of the stormwater storage system by a sufficient distance to ensure working room to properly and safely compact bedding and backfill materials but at no times shall the distance be less than 18-inches.
2. Backfill Material: Backfill material for the precast concrete, modular, buried, stormwater storage system shall be a clean, washed, poorly graded, free-draining, angular faced, crushed aggregate conforming to ASTM D448, classification size No. 6 or No. 67.
3. Final Fill: The final fill material shall conform to ASTM D2487 any classification except OL, CH, MH, OH, and PT provided the material can be adequately compacted with no adverse effects to the stormwater storage system.
4. If any bedding, backfill, or final fill material is selected to be a poorly graded (open graded) material, the material shall be separated by a non-woven geotextile conforming to AASHTO M228, Class 2.

PART 3 - EXECUTION

3.01 Earthwork

A. Excavation, trenching, and backfilling shall be as specified in Division 31 00 00 "Earthwork."

3.02 Identification

A. All precast concrete, modular, buried, stormwater storage systems shall be identified at the surface level with permanent, clearly visible markings indicating they are stormwater storage systems.

3.03 Inspection

A. General

1. Precast concrete members, accessories, and aggregate material used during installation shall be inspected prior to installation and any defective, damaged or non-conforming material shall be replaced.

B. Precast Concrete Members

1. Any precast concrete member with a fracture or continuous crack greater than 12-inches in length and 0.01 in width shall be rejected and replaced.
2. Any precast concrete member that has not reached the required design strength shall be rejected and replaced.
3. Any precast concrete member with indications of imperfections in mixing and/or molding, honeycombed, or open textured surface, shall be rejected and replaced.
4. Any precast concrete member with indications of substantial patches or repairs shall be rejected and replaced.
5. Any precast concrete member with exposed reinforcing steel shall be rejected and replaced.

(Specifier Note: This Section for Field Poured Concrete Slabs is only necessary for certain configurations of the modular, buried, stormwater storage system. Delete this Section if the Field Poured Concrete Slab is not to be utilized.)

C. Field Poured Concrete Slab

1. Any field poured concrete with a fracture or continuous crack greater than 12-inches length and 0.01 in width shall be rejected and re-poured.
2. Any field poured concrete that has not reached the required design strength shall be rejected and re-poured.
3. Any field poured concrete with indications of imperfections in mixing and/or molding, honeycombed, or open textured surface, shall be rejected and re-poured.
4. Any field poured concrete with indications of substantial patches or repairs shall be rejected and re-poured.
5. Any field poured concrete with exposed reinforcing steel shall be rejected and re-poured.

3.04 Stormwater Storage System Installation

A. General

1. General Locations and Arrangements: Plans and Shop Drawings shall indicate the general location and arrangement of the stormwater storage system. Installation shall conform to ASTM C891. Where specific installation procedures are not indicated in this Referenced Specification or the Plans, follow the product manufacturer's written instructions.

2. All precast concrete members shall be inspected for defects and cracks before being lowered into the trench. Any defective, damaged or unsound structure or any product that has had its grade disturbed after laying shall be taken up and replaced. The interior of the treatment system shall be free from dirt, excess water and other foreign materials as the installation progresses and left clean at the completion of the installation.

3.05 Excavation

A. Excavation

1. Excavate the pit to ensure that sides will be stable under all working conditions. Slope trench walls or provide supports in conformance with all federal, state, and local safety standards. Excavate only as much as can be safely maintained by available equipment.
2. Where excavation walls are stable or supported, provide a width sufficient, but no greater than necessary, to ensure working room to properly and safely place and compact embedment materials. The space between the stormwater storage system and excavation wall must be wider than the compaction equipment used in the compaction area.

B. Dewatering

1. Do not lay or embed any precast concrete member in standing or running water. Surface runoff shall be prevented from entering the excavation at all times.
2. When water is present in the work area, dewater to maintain stability of in-situ and imported materials. Maintain water level below the stormwater storage system bedding and foundation to provide a stable excavation bottom. Use, as appropriate, sump pumps, well points, deep wells, geofabrics, perforated underdrains, or stone blankets of sufficient thickness to remove and control water in the excavation. When excavating while depressing ground water, ensure the ground water is below the bottom of cut at all times to prevent washout from behind sheeting or sloughing of exposed excavation walls. Maintain control of water in the excavation before, during, and after the stormwater storage system installation and until embedment is installed and sufficient backfill has been placed to prevent flotation of the system, attached piping or accessory drainage structures.

C. Removal of Rock

1. Rock in either ledge or boulder formation shall be replaced with suitable materials to provide a compacted earth cushion having a thickness between exposed rock and the stormwater storage system of at least 12 inches.

D. Removal of Unstable Material

1. Where wet or otherwise unstable soil incapable of properly supporting the stormwater storage system, as determined by the Engineer, is encountered in the bottom of an excavation, such material shall be removed to at least 24 inches below bottom of the system and replaced to the proper grade with select granular material, compacted as directed by the Engineer. When removal of unstable material is due to the fault or neglect of the Contractor while performing shoring and sheeting, water removal, or other specified requirements, such removal and replacement shall be performed at no additional cost to the Owner.

3.06 Bedding

A. A stable and uniform bedding shall be provided for the stormwater storage system and any protruding features. The bedding shall be compacted to a minimum of 90% of maximum density per AASHTO T99, or as shown in the Plans. Structure bedding shall be a minimum of 6" in thickness. The bedding surface shall provide a firm foundation of uniform density throughout the entire footprint of the system.

3.07 Placing Precast Concrete Members

A. Each precast concrete member shall be thoroughly examined before being placed; defective or damaged members shall not be used. Precast concrete members shall be placed to within ± ¾" of the elevations as indicated on the Plans. Proper equipment shall be provided for lowering and setting precast concrete members into the excavation. Precast concrete members shall not be laid in water, and the members shall not be laid when trench conditions or weather are unsuitable for such work. Diversion of drainage or dewatering of excavations shall be provided as directed by the Engineer; see dewatering section.
B. Precast concrete members shall receive a ½" thick x 4" wide closed-cell polypropylene foam conforming to ASTM D8139, ASTM D1751, and ASTM D545 on all sides that will abut an adjacent member. The foam member shall remain in place to ensure proper alignment.
C. Precast concrete members shall be placed and aligned to within 1-1/4" of each other horizontally and vertically. The Engineer should be consulted for a course of action when joint gaps exceed 1-1/4".
D. Precast members transferring vertical loads to other members or slabs shall use a random oriented fiber bearing pad conforming to ASTM D4014 and ASTM D5992 between members with a minimum bearing surface area of 18 square-inches.
E. Minor mis-alignment of upper sections on slab or upper sections on other members may be adjusted through shimming using random oriented fiber pads conforming to the ASTM D4014 and ASTM D5992 provided the minimum bearing surface area from Section 3.07-D. is maintained.

3.08 Jointing/Sealing

A. Joints on the exterior top and side surface shall be sealed using a polyolefin backed exterior joint wrap conforming to ASTM C877. The joint wrap shall span the joint by a minimum of 4-inches on either side of the joint.
B. All sealed joints shall be protected from damage during placement of additional members and during final backfill. Damage during construction shall require re-sealing of the joints.

3.09 Backfilling

A. General

1. Backfill placement and compaction shall be constructed in accordance with the Specifications herein and the product manufacturer's published installation guides.

B. Backfilling Stormwater Storage System in Excavation

1. After the precast concrete member and accessory drainage connections have been properly bedded, select material from excavation or borrow, at a moisture content that will facilitate compaction, shall be placed along all sides of the system in layer depths to ensure minimum compaction density is obtained evenly throughout the backfill material. The backfill shall be brought up evenly on all sides of the structure. Each layer shall be thoroughly compacted with mechanical tampers or rammers. Tests for density shall be made as necessary to ensure conformance to the compaction requirements as Specified in the Geotechnical Report. Where it is necessary, in the opinion of the Engineer, that sheeting or portions of bracing used be left in place, the contract will be adjusted accordingly. Untreated sheeting shall not be left in place beneath structures or pavements.

C. Movement of Construction Machinery

1. Movement of construction machinery over a stormwater storage system at any stage of construction shall be at the Contractor's risk. Any damaged member shall be removed and replaced. Any equipment used during any stage of construction shall have a loading no greater than HS20 per AASHTO - Standard Specifications for Highway Bridges, 17th Edition - 2002. Permissible equipment shall not be permitted to operate over top of the system with less than 12-inches of structural cover.

END OF SECTION 33 46 23

REVISIONS:

No.	DATE	DESCRIPTION

THE CONTENTS OF THESE DRAWINGS ARE THE PROPERTY OF PRECON PRODUCTS AND ARE PROPRIETARY AND CONFIDENTIAL. THESE DOCUMENTS SHALL NOT BE DISSEMINATED FOR ANY OTHER USE, WITHOUT THE WRITTEN CONSENT OF PRECON PRODUCTS. IF YOU RECEIVE THESE DRAWINGS IN ERROR, RETURN TO SENDER WITHOUT READING, COPYING OR DISCLOSING THE CONTENTS.

DO NOT SCALE

240 W. LOS ANGELESE AVE.
SIMI VALLEY, CA 93065
P: (805) 527-0841 F: (805) 584-0769,
WWW.PRE-CONPRODUCTS.COM

TITLE: NOTES
SHADOWBOX STUDIOS

DRAWN BY: K.STRADER

DATE: 2/15/2022

SHEET: 3 OF 13

LOCATION: T:\Drawings\Vault\DESIGNS\Storm Prism\Customer\Blackhall Studios\14ft Infiltration System Blackhall Studios.dwg

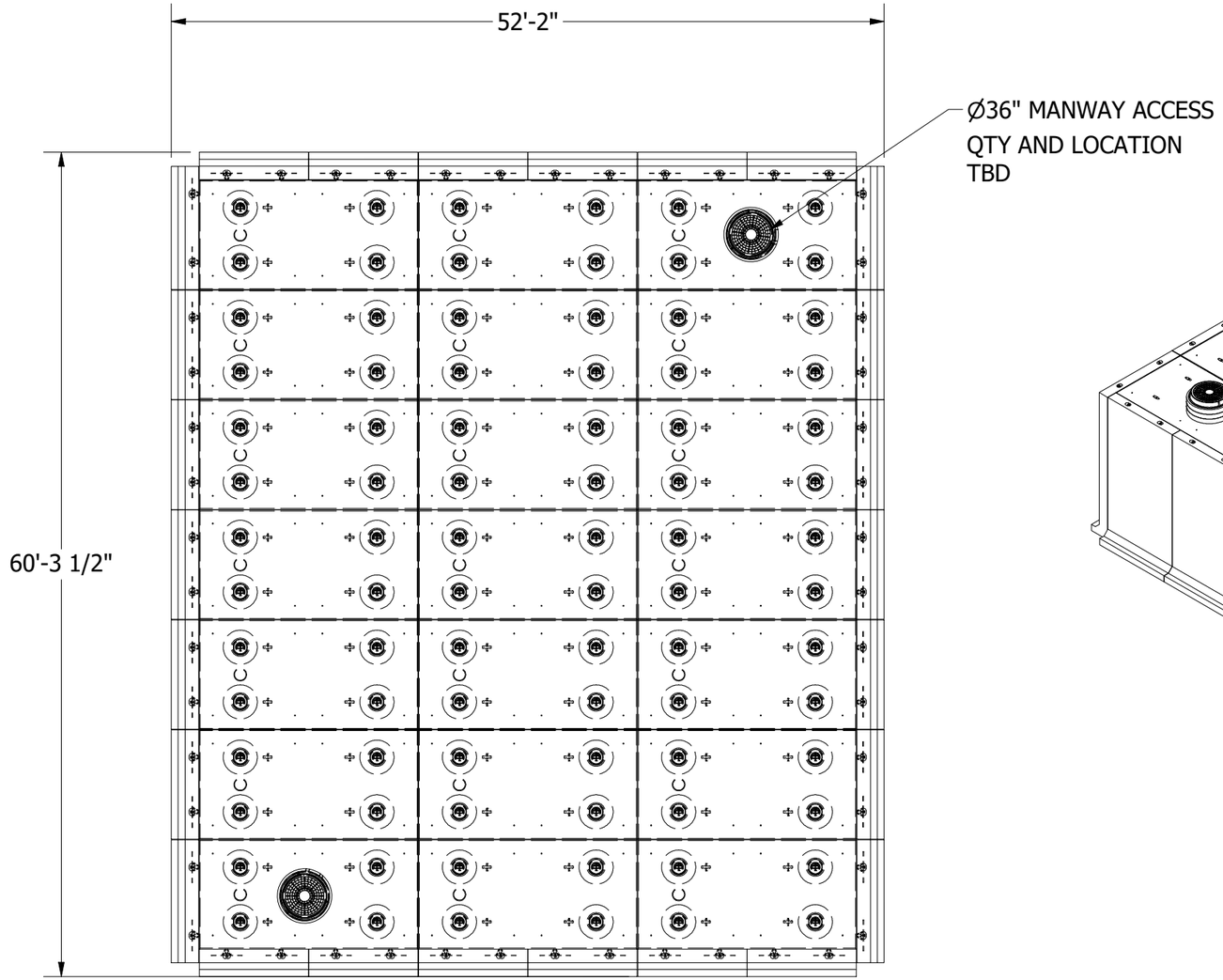

PLAN VIEW

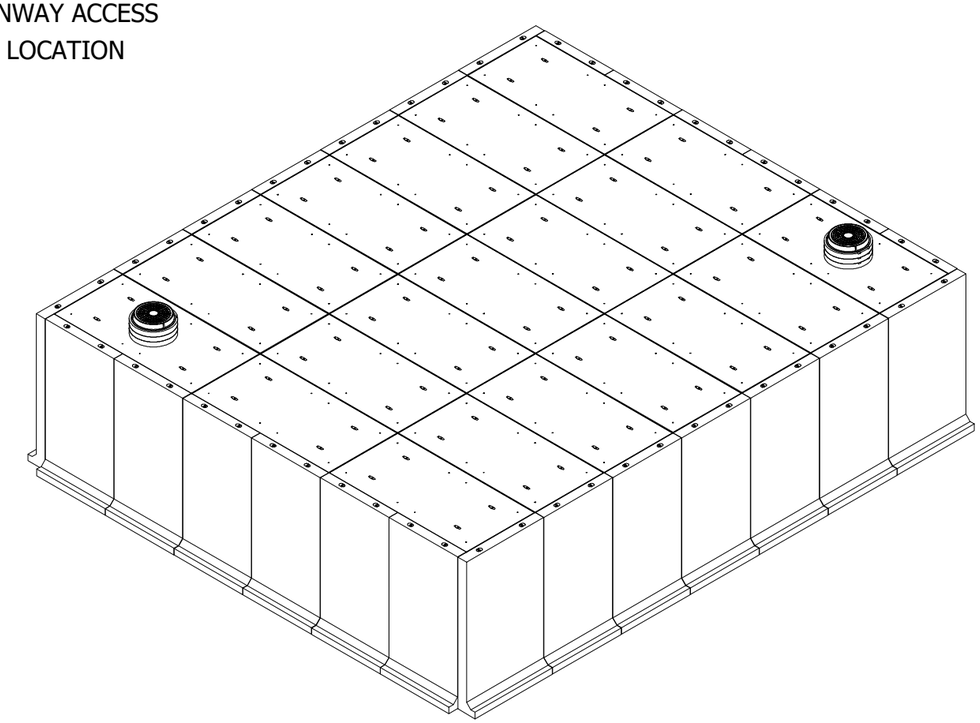

ISOMETRIC VIEW

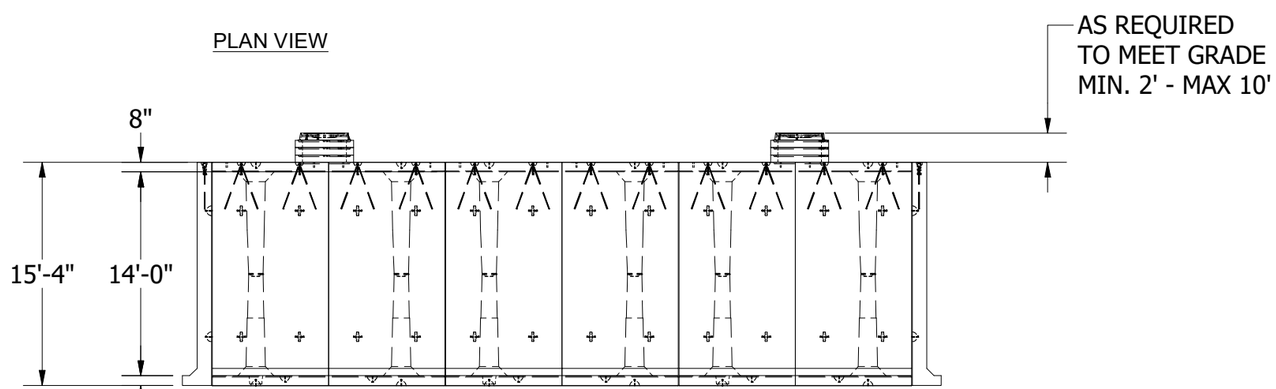

PROFILE VIEW

INLETs, OUTLETs AND MANWAY ACCESS
LOCATION AND SIZE TBD

SUMMARY

DESCRIPTION	QTY	APPROX. WEIGHT
WALLS 8'Wx 15'-4" T	22	19,300 LBS
WALLS 9'Wx 15'-4'T	4	21,700 LBS
EQ 7' TOPS	21	18,000 LBS
EQ 7' BASE	21	18,100 LBS

REVISIONS:

No.	DATE	DESCRIPTION

THE CONTENTS OF THESE DRAWINGS ARE THE PROPERTY OF PRECON PRODUCTS AND ARE PROPRIETARY AND CONFIDENTIAL. THESE DOCUMENTS SHALL NOT BE DISSEMINATED FOR ANY OTHER USE, WITHOUT THE WRITTEN CONSENT OF PRECON PRODUCTS. IF YOU RECEIVE THESE DRAWINGS IN ERROR, RETURN TO SENDER WITHOUT READING, COPYING OR DISCLOSING THE CONTENTS.

DO NOT SCALE

240 W. LOS ANGELESE AVE.
SIMI VALLEY, CA 93065
P: (805) 527-0841 F: (805) 584-0769,
WWW.PRE-CONPRODUCTS.COM

TITLE: NORTH EQ SYSTEM OVERVIEW SHADOWBOX STUDIOS

DRAWN BY: K.STRADER

DATE: 2/15/2022

SHEET: 4 OF 13

LOCATION: T:\Drawings\Vault\DESIGNS\Storm Prism\Customer\Blackhall Studios\14ft Infiltration System Blackhall Studios.dwg

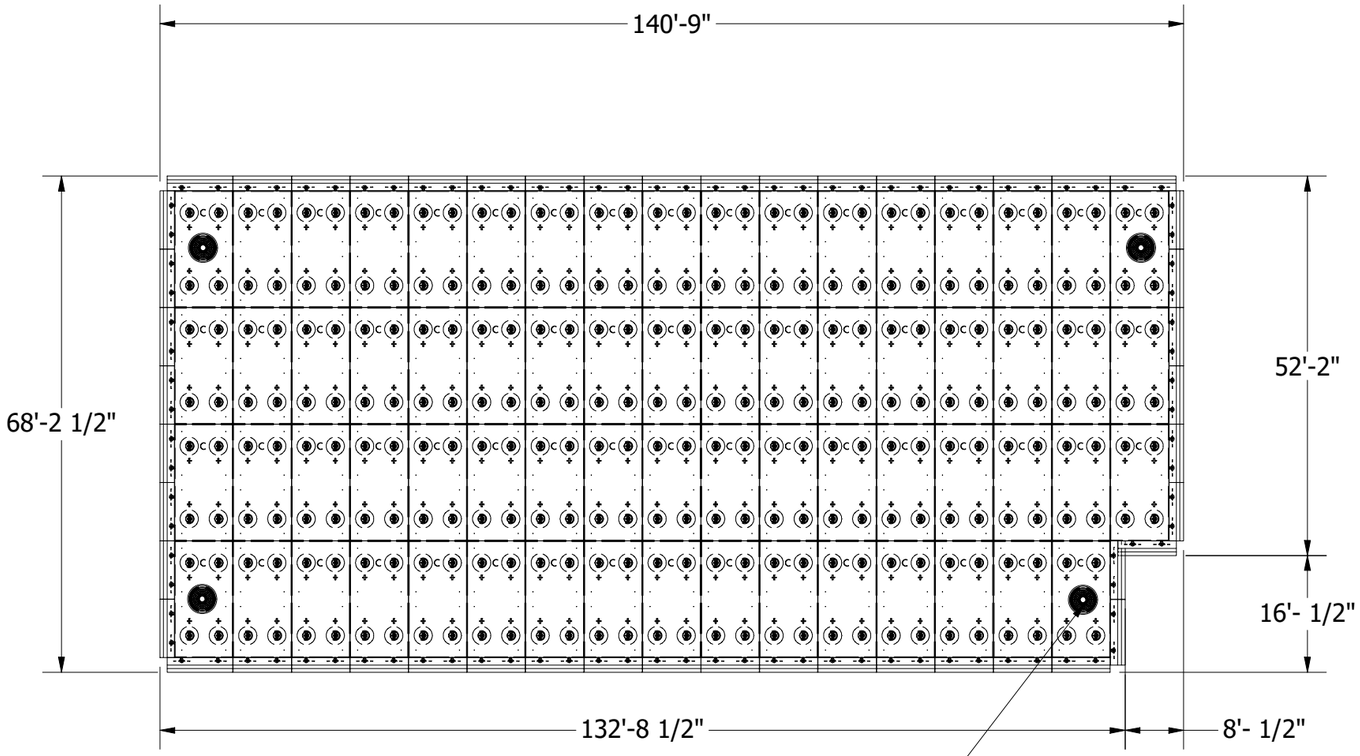

PLAN VIEW

Ø36" MANWAY ACCESS
QTY AND LOCATION
TBD

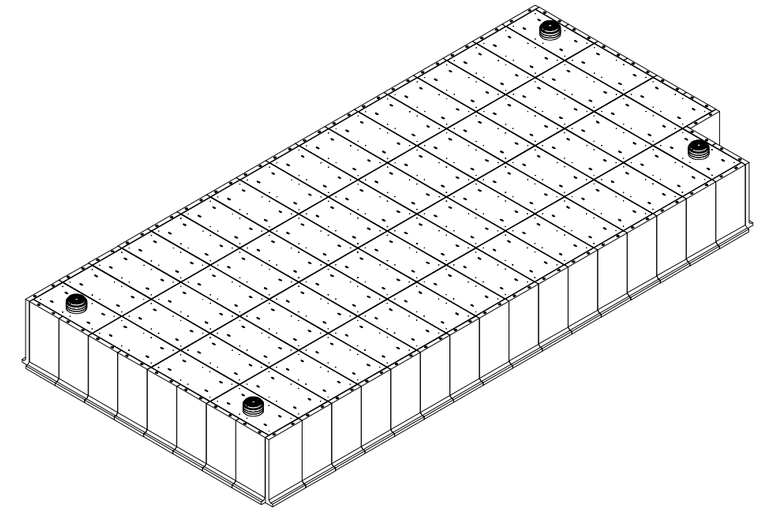

ISOMETRIC VIEW

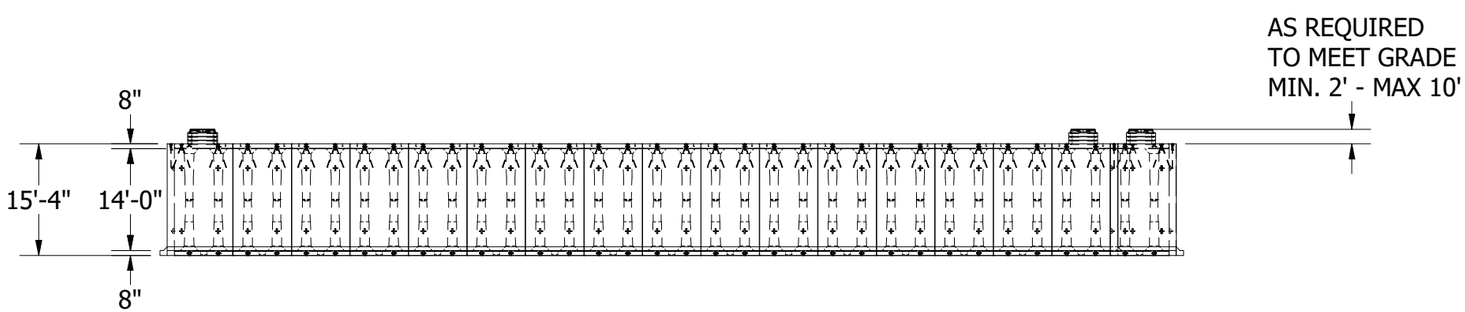

PROFILE VIEW

INLETs, OUTLETs AND MANWAY ACCESS LOCATION AND SIZE TBD	SUMMARY		
	DESCRIPTION	QTY	APPROX. WEIGHT
	WALLS 8'Wx 15'-4" T	45	19,300 LBS
	WALLS 9'Wx 15'-4'T	5	21,700 LBS
	EQ 7' TOPS	67	18,000 LBS
	EQ 7' BASE	67	18,100 LBS

REVISIONS:

No.	DATE	DESCRIPTION

THE CONTENTS OF THESE DRAWINGS ARE THE PROPERTY OF PRECON PRODUCTS AND ARE PROPRIETARY AND CONFIDENTIAL. THESE DOCUMENTS SHALL NOT BE DISSEMINATED FOR ANY OTHER USE, WITHOUT THE WRITTEN CONSENT OF PRECON PRODUCTS. IF YOU RECEIVE THESE DRAWINGS IN ERROR, RETURN TO SENDER WITHOUT READING, COPYING OR DISCLOSING THE CONTENTS.

DO NOT SCALE

240 W. LOS ANGELESE AVE.
SIMI VALLEY, CA 93065
P: (805) 527-0841 F: (805) 584-0769,
WWW.PRE-CONPRODUCTS.COM

TITLE:
SOUTH EQ SYSTEM
OVERVIEW
SHADOWBOX STUDIOS

DRAWN BY: K.STRADER

DATE: 2/15/2022

SHEET: 5 OF 13

LOCATION: T:\Drawings\Vault\DESIGNS\Storm Prism\Customer\Blackhall Studios\14ft Infiltration System Blackhall Studios.dwg

14'-0" UNIT DETAIL

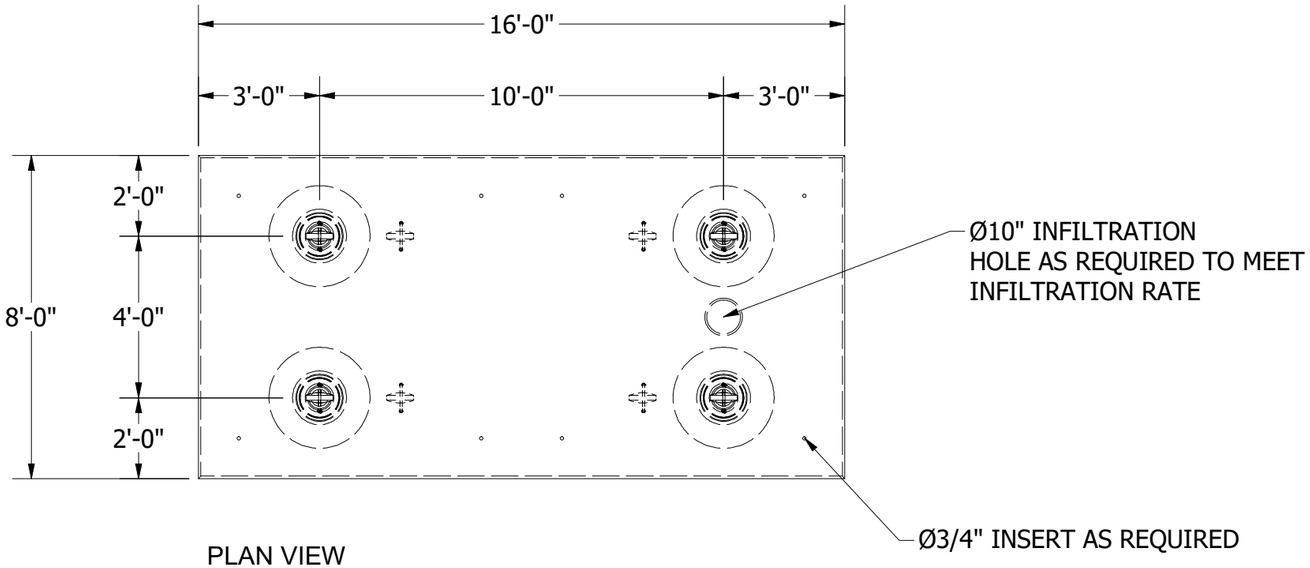

PLAN VIEW

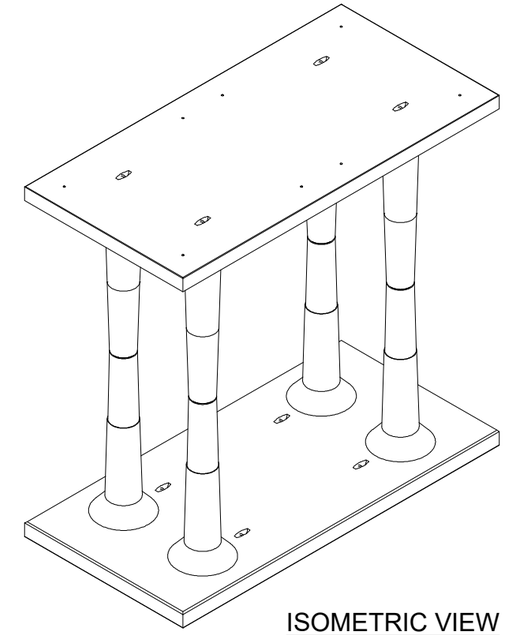

ISOMETRIC VIEW

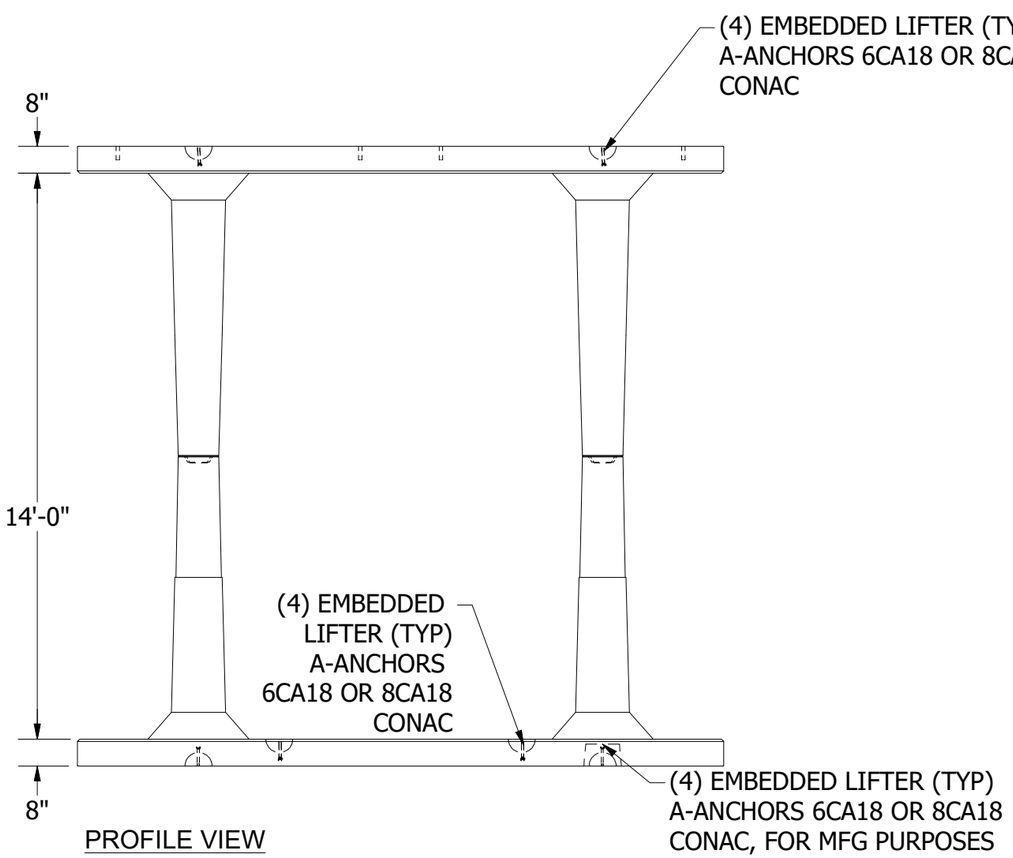

PROFILE VIEW

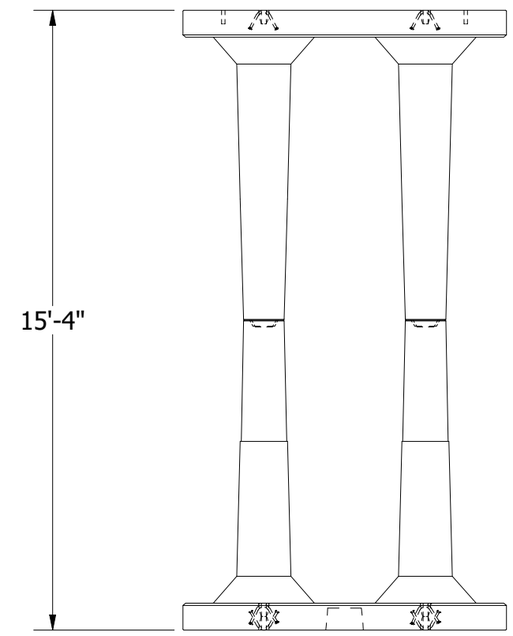

END VIEW

REVISIONS:

No.	DATE	DESCRIPTION

THE CONTENTS OF THESE DRAWINGS ARE THE PROPERTY OF PRECON PRODUCTS AND ARE PRORIETARY AND CONFIDENTIAL. THESE DOCUMENTS SHALL NOT BE DISSEMINATED FOR ANY OTHER USE, WITHOUT THE WRITTEN CONSENT OF PRECON PRODUCTS. IF YOU RECEIVE THESE DRAWINGS IN ERROR, RETURN TO SENDER WITHOUT READING, COPYING OR DISCLOSING THE CONTENTS.

DO NOT SCALE

240 W. LOS ANGELESE AVE.
SIMI VALLEY, CA 93065
P: (805) 527-0841 F: (805) 584-0769,
WWW.PRE-CONPRODUCTS.COM

TITLE: STORMPRISM 14'-0" INFILTRATION UNIT SHADOWBOX STUDIOS

DRAWN BY: K.STRADER

DATE: 2/15/2022

SHEET: 6 OF 13

LOCATION:T:\Drawings\Vault\DESIGNS\Storm Prism\Customer\Blackhall Studios\14ft Infiltration System Blackhall Studios.dwg

STANDARD 14'-0" INFILTRATION BASE

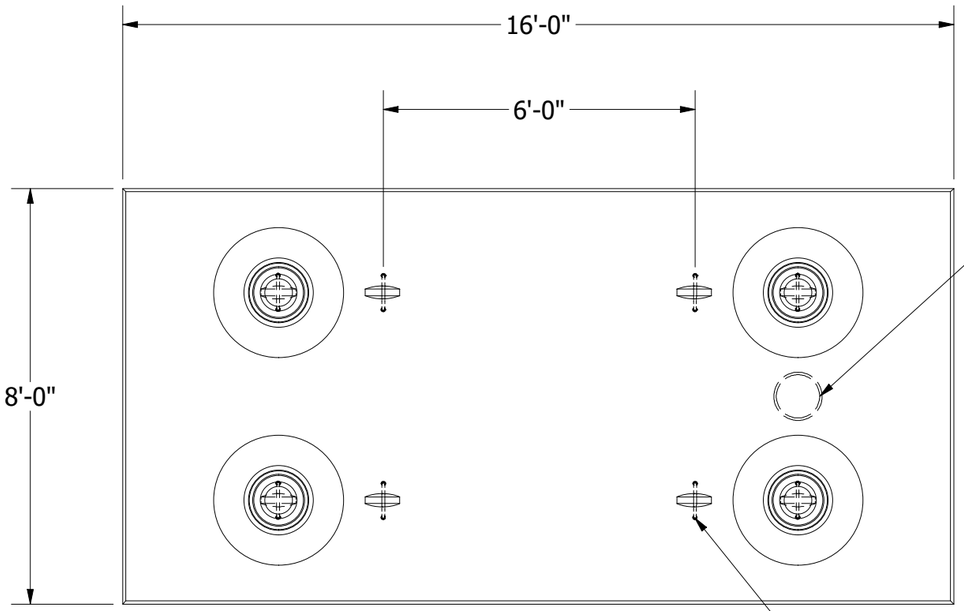

PLAN VIEW

Ø10" INFILTRATION HOLE AS REQUIRED TO MEET INFILTRATION RATE

(8) EMBEDDED LIFTER (TYP.) A-ANCHORS 6CA18 CONAC

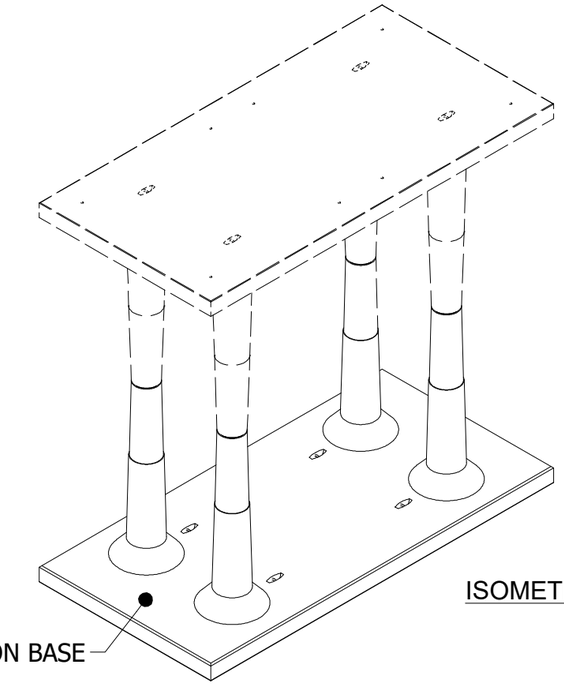

ISOMETRIC VIEW

STANDARD 14'-0" INFILTRATION BASE

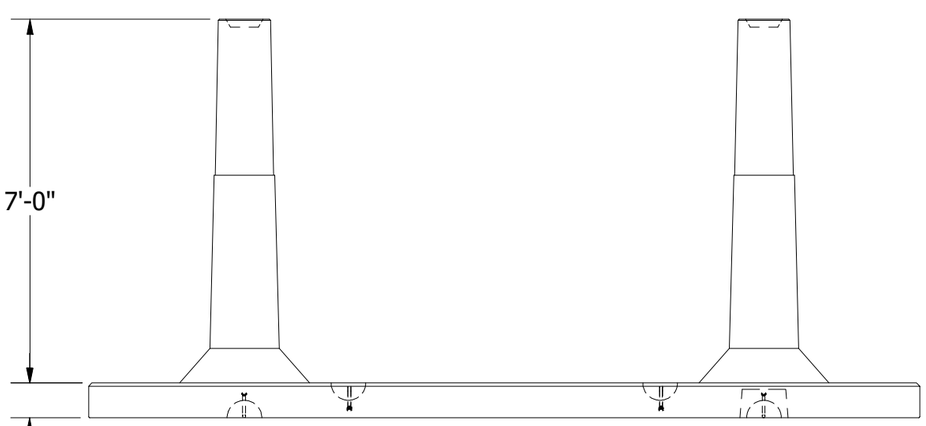

PROFILE VIEW

PART INFORMATION	
DESCRIPTION	APPROX. WEIGHT IN LBS
EQ 14'-0" BASE	17,900 LBS

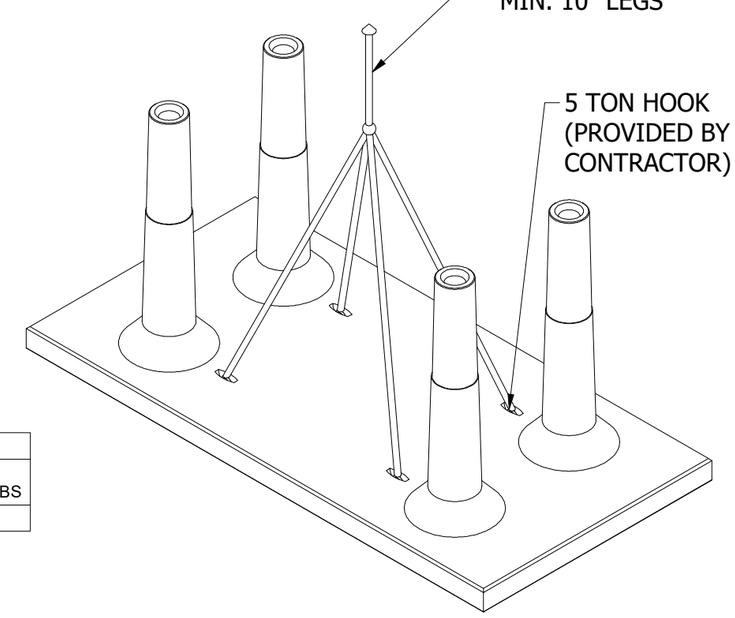

4-WAY SLING WITH MIN. 10" LEGS

5 TON HOOK (PROVIDED BY CONTRACTOR)

LIFTING DETAIL

REVISIONS:

No.	DATE	DESCRIPTION

THE CONTENTS OF THESE DRAWINGS ARE THE PROPERTY OF PRECON PRODUCTS AND ARE PROPRIETARY AND CONFIDENTIAL. THESE DOCUMENTS SHALL NOT BE DISSEMINATED FOR ANY OTHER USE, WITHOUT THE WRITTEN CONSENT OF PRECON PRODUCTS. IF YOU RECEIVE THESE DRAWINGS IN ERROR, RETURN TO SENDER WITHOUT READING, COPYING OR DISCLOSING THE CONTENTS.

DO NOT SCALE

240 W. LOS ANGELESE AVE.
SIMI VALLEY, CA 93065
P: (805) 527-0841 F: (805) 584-0769,
WWW.PRE-CONPRODUCTS.COM

TITLE: STORMPRISM 14'-0" INFILTRATION BASE SHADOWBOX STUDIOS

DRAWN BY: K.STRADER

DATE: 2/15/2022

SHEET: 7 OF 13

LOCATION:T:\Drawings\Vault\DESIGNS\Storm Prism\Customer\Blackhall Studios\14ft Infiltration System Blackhall Studios.dwg

STANDARD 14'-0" INFILTRATION TOP

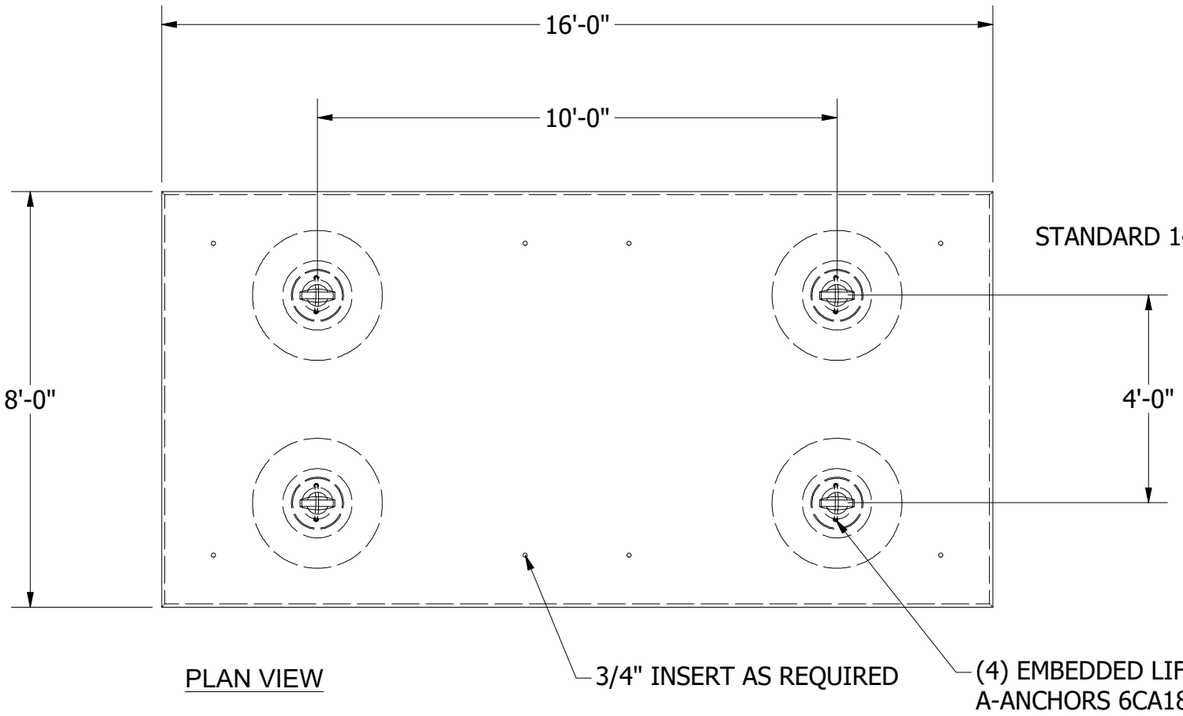

PLAN VIEW

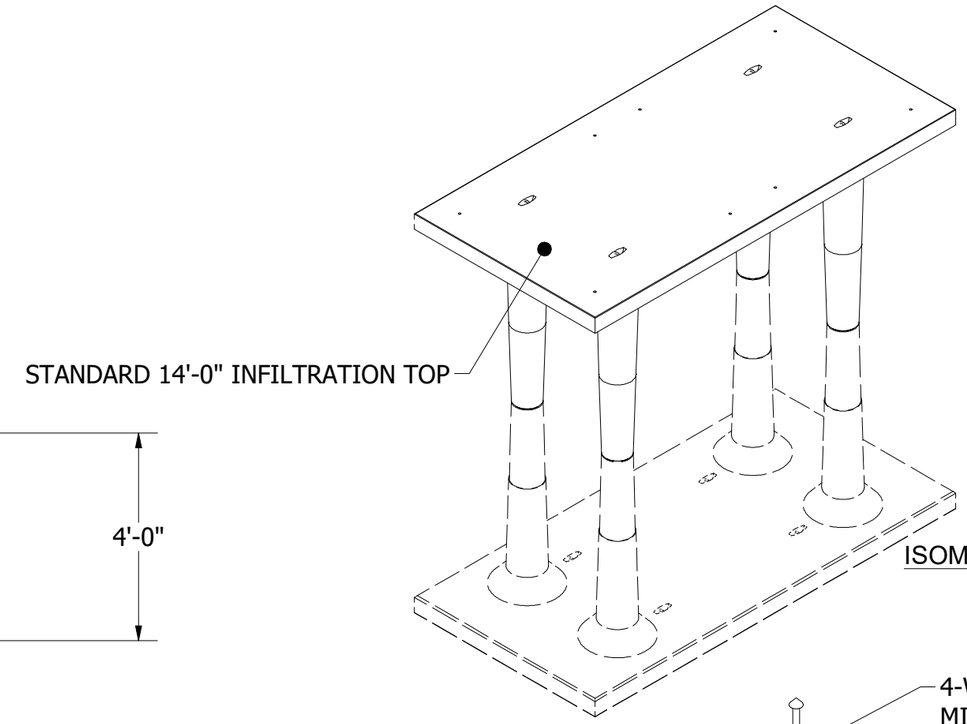

ISOMETRIC VIEW

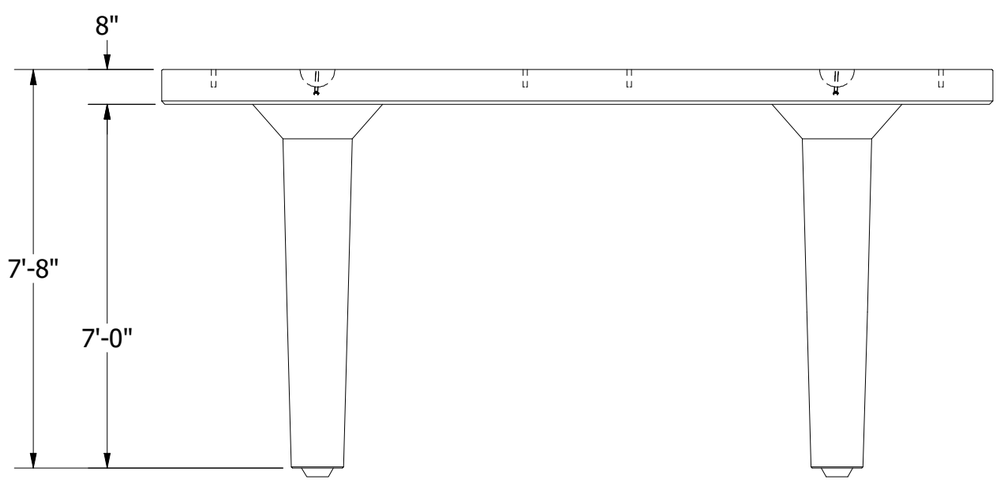

PROFILE VIEW

PART INFORMATION	
DESCRIPTION	APPROX. WEIGHT IN LBS
EQ 14'-0" TOP	18,100 LBS

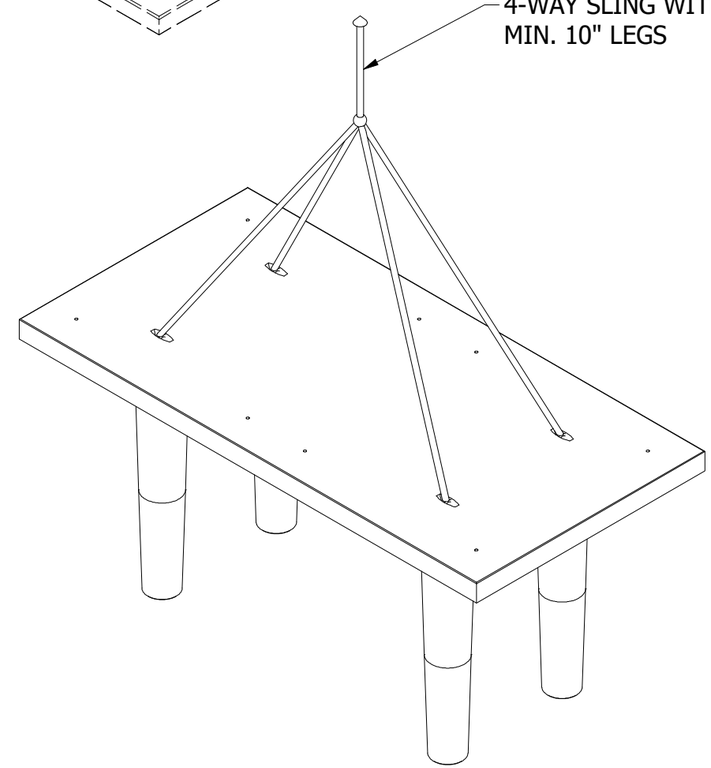

LIFTING DETAIL

REVISIONS:

No.	DATE	DESCRIPTION

THE CONTENTS OF THESE DRAWINGS ARE THE PROPERTY OF PRECON PRODUCTS AND ARE PRORIETARY AND CONFIDENTIAL. THESE DOCUMENTS SHALL NOT BE DISSEMINATED FOR ANY OTHER USE, WITHOUT THE WRITTEN CONSENT OF PRECON PRODUCTS. IF YOU RECEIVE THESE DRAWINGS IN ERROR, RETURN TO SENDER WITHOUT READING, COPYING OR DISCLOSING THE CONTENTS.

DO NOT SCALE

240 W. LOS ANGELESE AVE.
SIMI VALLEY, CA 93065
P: (805) 527-0841 F: (805) 584-0769,
WWW.PRE-CONPRODUCTS.COM

TITLE: STORMPRISM 14'-0" INFILTRATION TOP SHADOWBOX STUDIOS

DRAWN BY: K.STRADER

DATE: 2/15/2022

SHEET: 8 OF 13

LOCATION: T:\Drawings\Vault\DESIGNS\Storm Prism\Customer\Blackhall Studios\14ft Infiltration System Blackhall Studios.dwg

FILTER INFORMATION

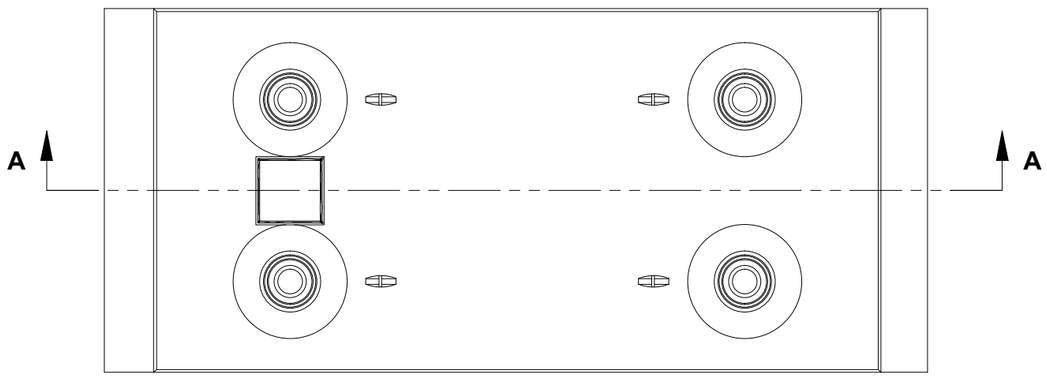

PLAN VIEW OF BASE ONLY

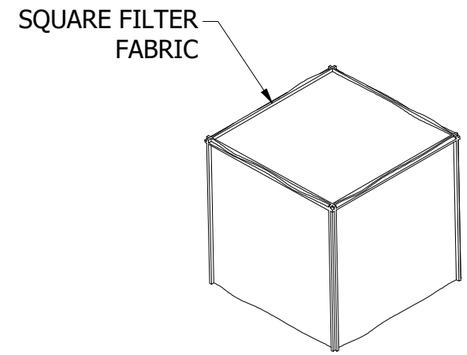

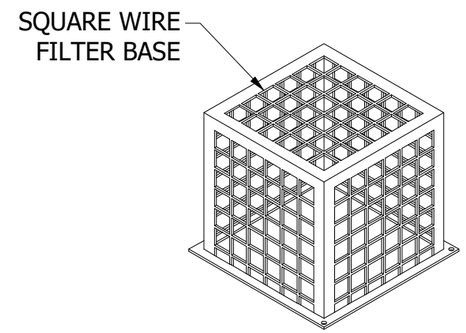

FILTER

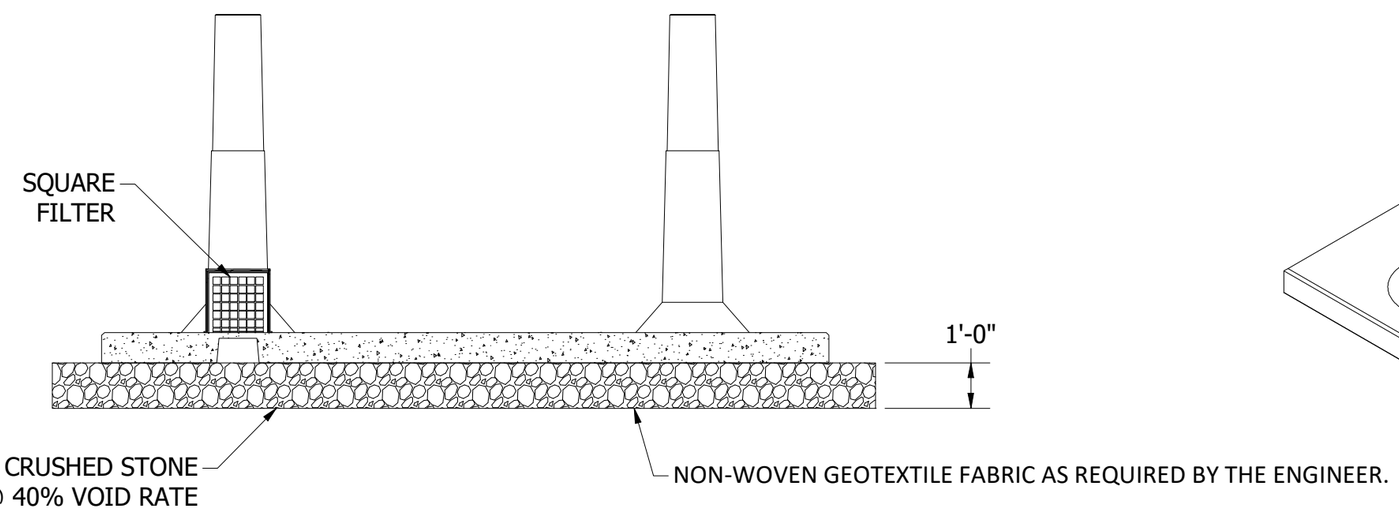

SECTION A-A

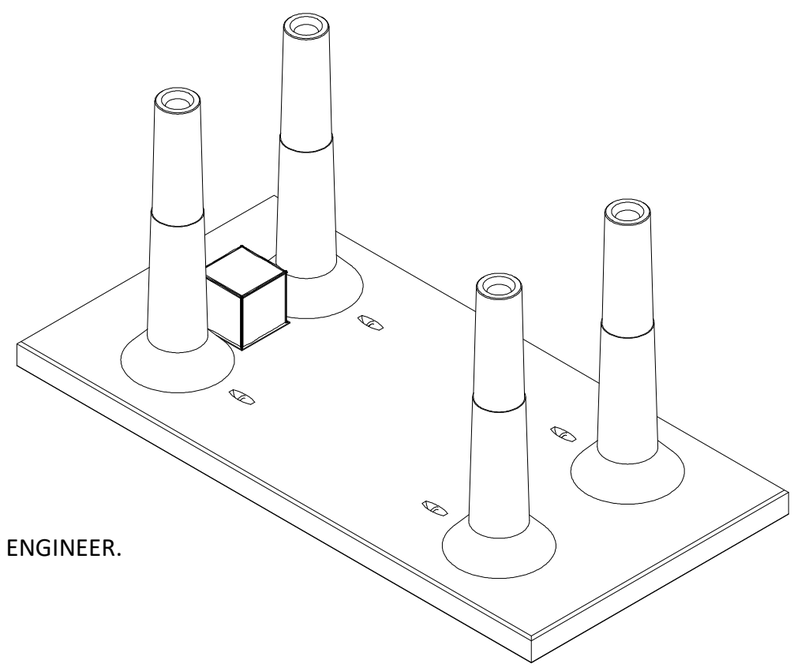

REVISIONS:

No.	DATE	DESCRIPTION

THE CONTENTS OF THESE DRAWINGS ARE THE PROPERTY OF PRECON PRODUCTS AND ARE PROPRIETARY AND CONFIDENTIAL. THESE DOCUMENTS SHALL NOT BE DISSEMINATED FOR ANY OTHER USE, WITHOUT THE WRITTEN CONSENT OF PRECON PRODUCTS. IF YOU RECEIVE THESE DRAWINGS IN ERROR, RETURN TO SENDER WITHOUT READING, COPYING OR DISCLOSING THE CONTENTS.

DO NOT SCALE

240 W. LOS ANGELESE AVE.
SIMI VALLEY, CA 93065
P: (805) 527-0841 F: (805) 584-0769,
WWW.PRE-CONPRODUCTS.COM

TITLE: STORMPRISM INFILTRATION FILTER INFORMATION

DRAWN BY: K.STRADER

DATE: 2/15/2022

SHEET: 9 OF 13

LOCATION:T:\Drawings\Vault\DESIGNS\Storm Prism\Customer\Blackhall Studios\14ft Infiltration System Blackhall Studios.dwg

STANDARD 15'-4" WALL

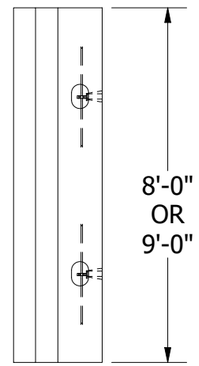

PART INFORMATION	
DESCRIPTION	APPROX. WEIGHT IN LBS
INTERNAL WALLS 8'Wx 15'-4" T	19,300 LBS
INTERNAL WALLS 9'Wx 15'-4" T	21,700 LBS

PLAN VIEW

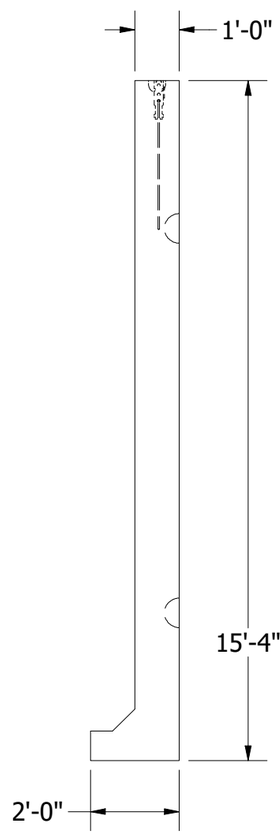

PROFILE VIEW

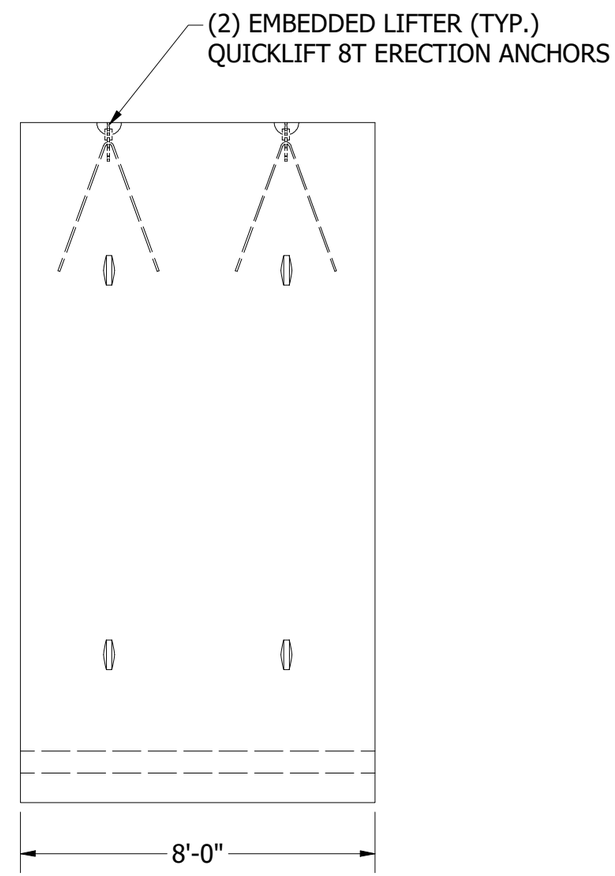

SIDE VIEW

REVISIONS:

No.	DATE	DESCRIPTION

THE CONTENTS OF THESE DRAWINGS ARE THE PROPERTY OF PRECON PRODUCTS AND ARE PROPRIETARY AND CONFIDENTIAL. THESE DOCUMENTS SHALL NOT BE DISSEMINATED FOR ANY OTHER USE, WITHOUT THE WRITTEN CONSENT OF PRECON PRODUCTS. IF YOU RECEIVE THESE DRAWINGS IN ERROR, RETURN TO SENDER WITHOUT READING, COPYING OR DISCLOSING THE CONTENTS.

DO NOT SCALE

240 W. LOS ANGELESE AVE.
SIMI VALLEY, CA 93065
P: (805) 527-0841 F: (805) 584-0769,
WWW.PRE-CONPRODUCTS.COM

TITLE:
STORMPRISM INFILTRATION SYSTEM
STANDARD 15'-4" WALL DETAIL

DRAWN BY: K.STRADER

DATE: 2/15/2022

SHEET: 10 OF 13

LOCATION:T:\Drawings\Vault\DESIGNS\Storm Prism\Customer\Blackhall Studios\14ft Infiltration System Blackhall Studios.dwg

OPTIONAL MANWAY ACCESS LOCATIONS

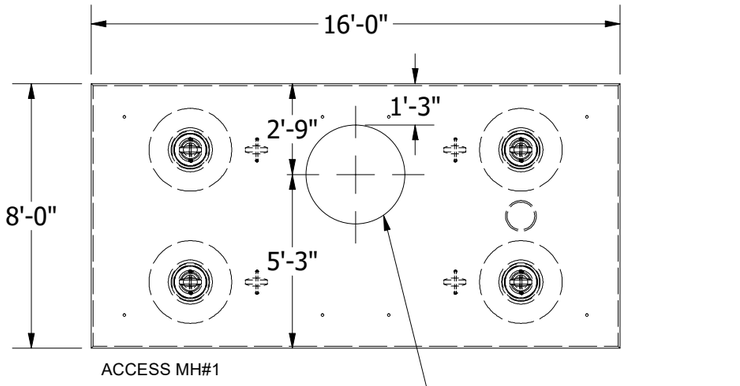

ACCESS MH#1

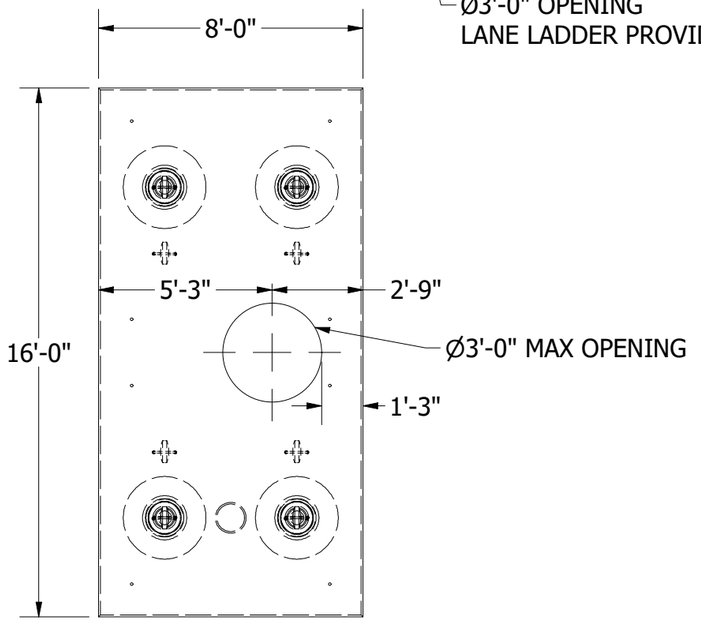

ACCESS MH#2

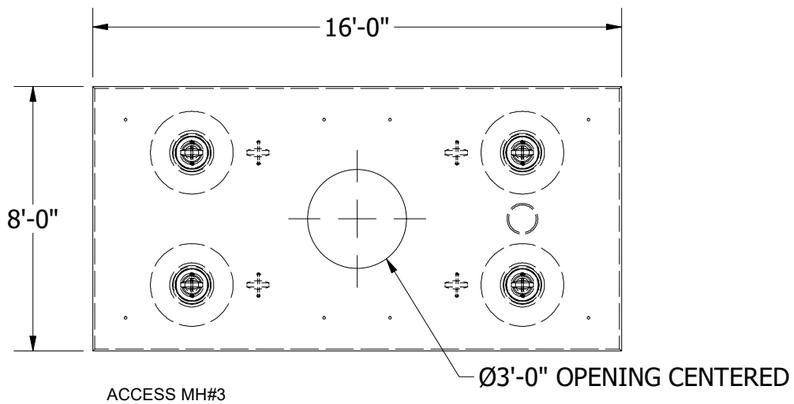

ACCESS MH#3

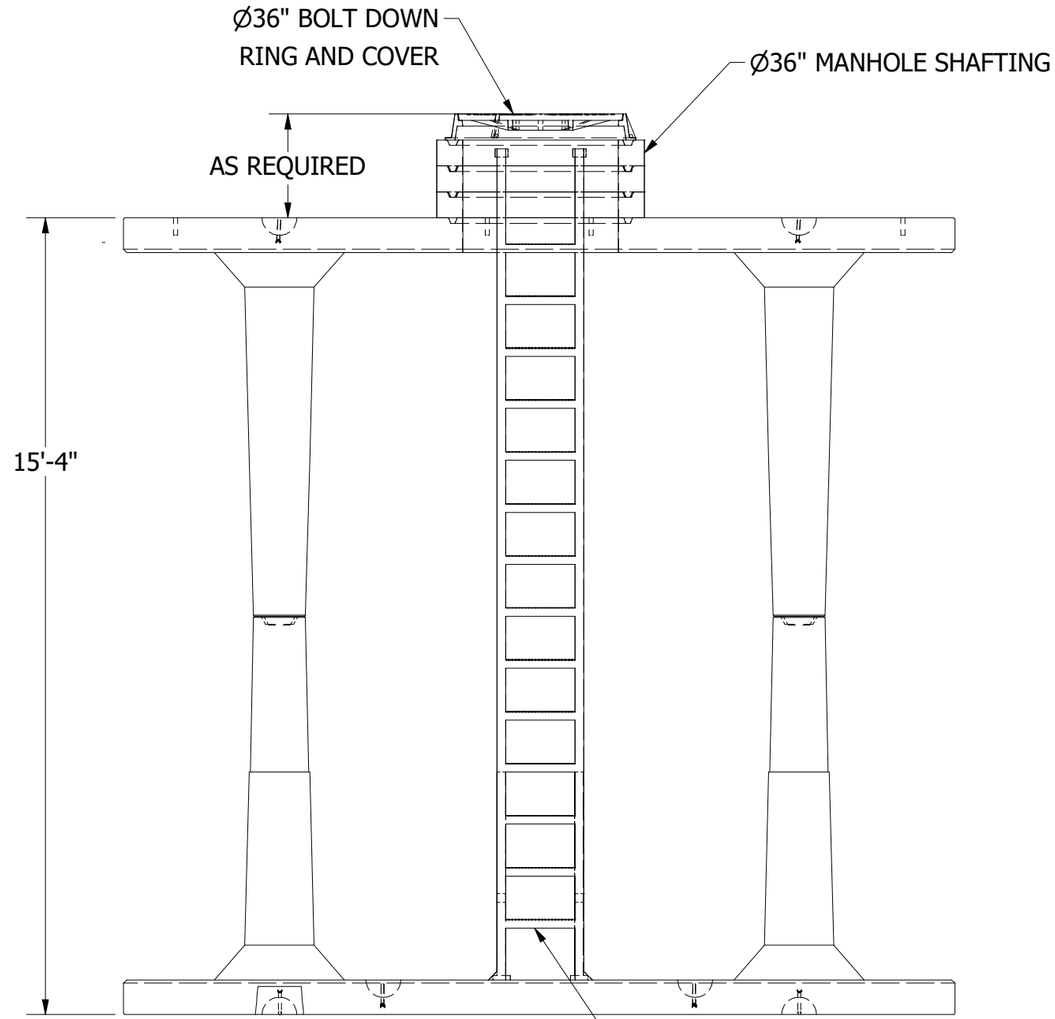

LADDER DETAIL

REVISIONS:

No.	DATE	DESCRIPTION

THE CONTENTS OF THESE DRAWINGS ARE THE PROPERTY OF PRECON PRODUCTS AND ARE PROPRIETARY AND CONFIDENTIAL. THESE DOCUMENTS SHALL NOT BE DISSEMINATED FOR ANY OTHER USE, WITHOUT THE WRITTEN CONSENT OF PRECON PRODUCTS. IF YOU RECEIVE THESE DRAWINGS IN ERROR, RETURN TO SENDER WITHOUT READING, COPYING OR DISCLOSING THE CONTENTS.

DO NOT SCALE

240 W. LOS ANGELESE AVE.
SIMI VALLEY, CA 93065
P: (805) 527-0841 F: (805) 584-0769,
WWW.PRE-CONPRODUCTS.COM

TITLE: STORMPRISM INFILTRATION SYSTEM MANWAY ACCESS LOCATIONS AND LADDER INFORMATION

DRAWN BY: K.STRADER

DATE: 2/15/2022

SHEET: 11 OF 13

LOCATION:T:\Drawings\Vault\DESIGNS\Storm Prism\Customer\Blackhall Studios\14ft Infiltration System Blackhall Studios.dwg

JOINT SEALANT DETAIL

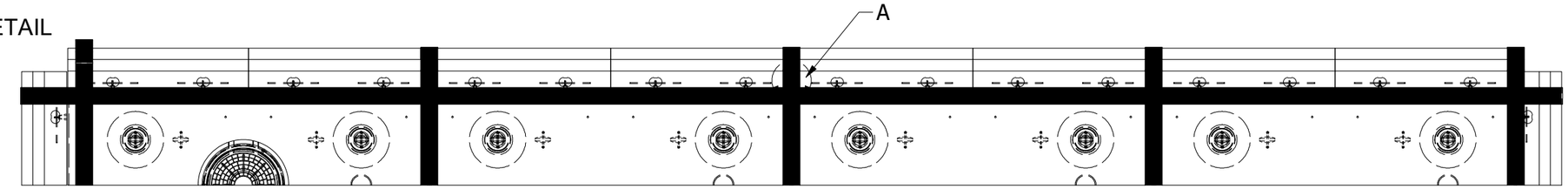

STORMPRISM SLICED PLAN VIEW TO SHOW WALL JOINT

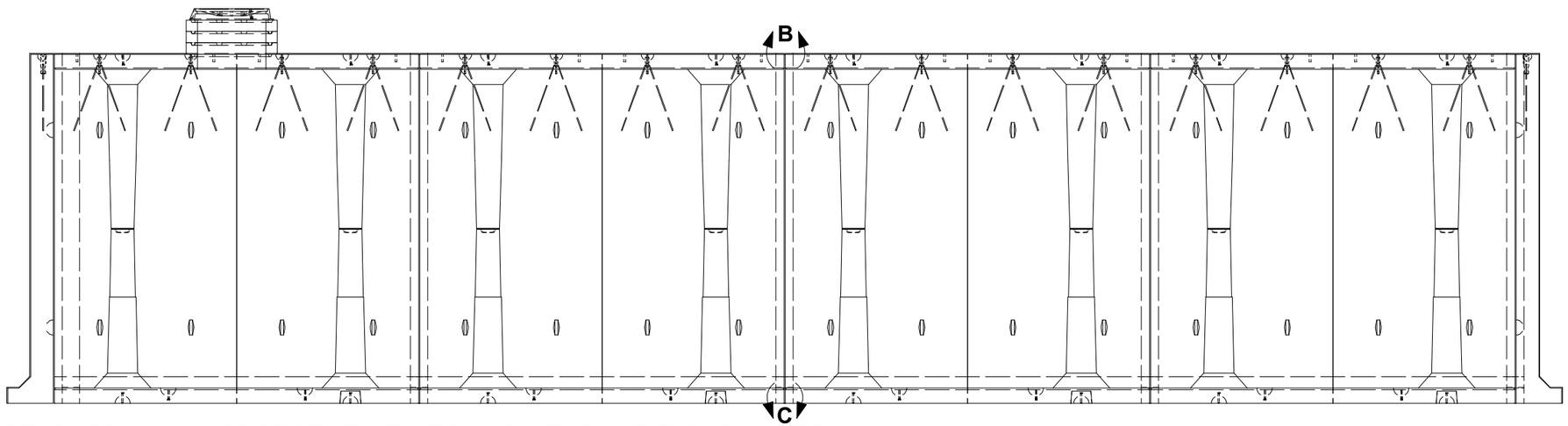

STORMPRISM SLICED PROFILE VIEW TO SHOW TOP AND FLOOR JOINTS

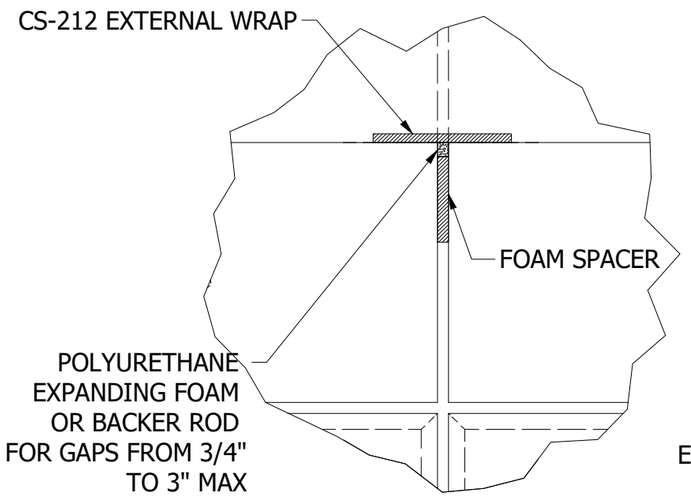

DETAIL A
WALL JOINT

ONLY VERTICAL PART OF WALL IS DETAILED FOR CLARITY

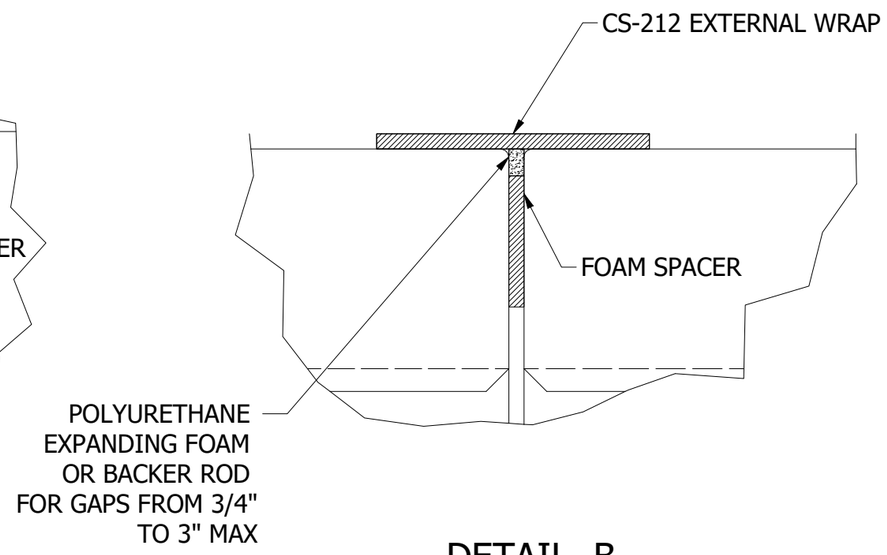

DETAIL B
TOP JOINT

WALL JOINT SEALANT NOT SHOWN FOR CLARITY

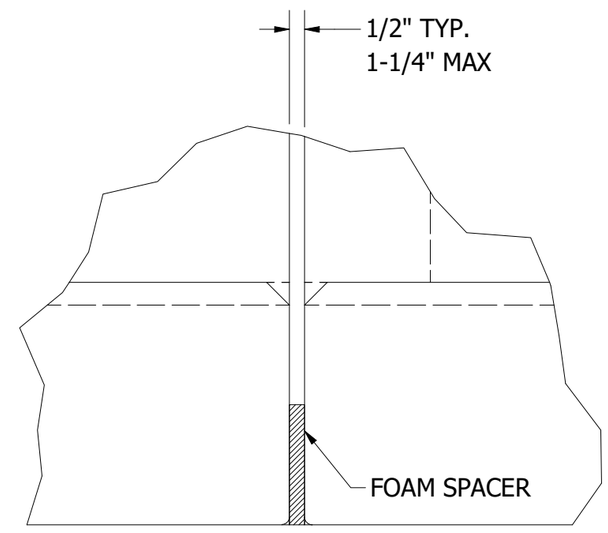

DETAIL C
BOTTOM JOINT

REVISIONS:

No.	DATE	DESCRIPTION

THE CONTENTS OF THESE DRAWINGS ARE THE PROPERTY OF PRECON PRODUCTS AND ARE PROPRIETARY AND CONFIDENTIAL. THESE DOCUMENTS SHALL NOT BE DISSEMINATED FOR ANY OTHER USE, WITHOUT THE WRITTEN CONSENT OF PRECON PRODUCTS. IF YOU RECEIVE THESE DRAWINGS IN ERROR, RETURN TO SENDER WITHOUT READING, COPYING OR DISCLOSING THE CONTENTS.

DO NOT SCALE

240 W. LOS ANGELESE AVE.
SIMI VALLEY, CA 93065
P: (805) 527-0841 F: (805) 584-0769,
WWW.PRE-CONPRODUCTS.COM

TITLE: STORMPRISM INFILTRATION SYSTEM JOINT DETAIL

DRAWN BY: K.STRADER

DATE: 2/15/2022

SHEET: 12 OF 13

LOCATION:T:\Drawings\Vault\DESIGNS\Storm Prism\Customer\Blackhall Studios\14ft Infiltration System Blackhall Studios.dwg

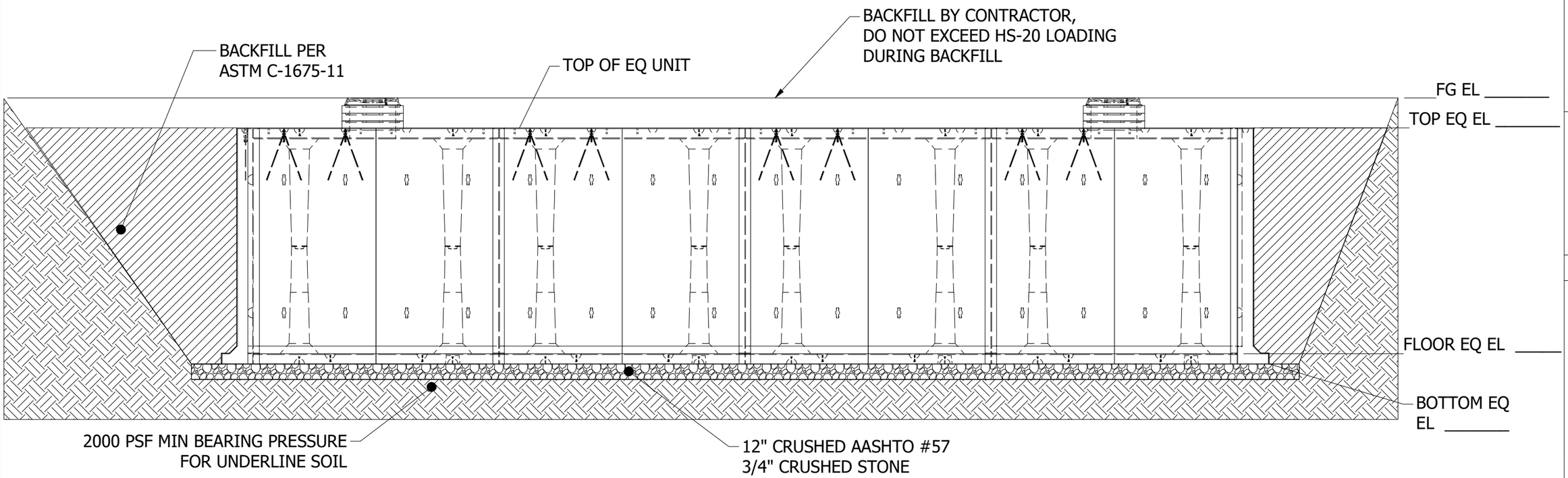

INSTALLATION SPECIFICATIONS

Storm Prism shall be installed in accordance with ASTM C-891-11 Standard Practice for Installation of Underground Precast Concrete Utility Structures.
The bearing pressure of the underlying soil must be verified by the geotechnical engineer prior to placing aggregate sub base.
The leveling bed material shall comply with APWA 216-2.4.
The leveling bed shall be graded to a tolerance of ¼" of the plan elevation.
The leveling bed shall extend beyond the Storm Prism perimeter by at least 24".
The Storm Prism modules shall be placed on line and grade per the site plans. Space between modules shall be 1/2" plus / minus 1/2"
Storm Prism modules are designed to be soil tight. All exterior joints between adjacent modules shall be sealed using a preformed, cold applied, self-adhering, polymer wrap conforming to: ASTM E-1745, C-877, C-990 Specifications, and AASHTO M198 Type B.
Wrap shall be applied per manufacture's recommendations.

BACKFILL

Fill placed around the Storm Prism Modules shall be placed evenly around the entire system in 8" lifts, per APWA 300-3.5.2.
Backfill shall be mechanically compacted (no jetting).
Special care should be taken when compacting adjacent to or near the tape seal not to disrupt the seal.
Fill placement over top of Storm Prism shall be done in accordance with ASTM C1675. Fill material not to exceed 120 PCF. At no time shall machinery or vehicles exceeding HS-20 travel over the Storm Prism.

REVISIONS:

No.	DATE	DESCRIPTION

THE CONTENTS OF THESE DRAWINGS ARE THE PROPERTY OF PRECON PRODUCTS AND ARE PRORIETARY AND CONFIDENTIAL. THESE DOCUMENTS SHALL NOT BE DISSEMINATED TO ANY OTHER USE, WITHOUT THE WRITTEN CONSENT OF PRECON PRODUCTS. IF YOU RECEIVE THESE DRAWINGS IN ERROR, RETURN TO SENDER WITHOUT READING, COPYING OR DISCLOSING THE CONTENTS.

DO NOT SCALE

240 W. LOS ANGELESE AVE.
SIMI VALLEY, CA 93065
P: (805) 527-0841 F: (805) 584-0769,
WWW.PRE-CONPRODUCTS.COM

TITLE: STORMPRISM INFILTRATION SYSTEM BACKFILL AND ELEVATION INFORMATION

DRAWN BY: K.STRADER

DATE: 2/15/2022

SHEET: 13 OF 13

LOCATION: T:\Drawings\Vault\DESIGNS\Storm Prism\Customer\Blackhall Studios\14ft Infiltration System Blackhall Studios.dwg

APPENDIX D

Soils Report

APPENDIX E

Operation & Maintenance Plan

StormPrism EQ Inspection Procedures and Form

Inspection and maintenance of the underground detention, retention, or infiltration system is vital for the performance and life cycle of the stormwater management system. Many agencies publish inspection and maintenance regulations for stormwater BMPs to ensure they operate as designed to protect downstream water bodies from pollution and hydromodification. Inspection and maintenance professionals should familiarize themselves with the applicable regulations and requirements before undertaking activities in the field. One important thing to consider is that most underground stormwater storage systems, including StormPrism EQ (SPEQ), are considered confined spaces and entering such spaces requires highly trained personnel and specialized equipment.

Pre-Con recommends that new systems be inspected after the first significant rainfall event and then multiple times during the first year to assess the site specific conditions. This is recommended because pollutant loading and characteristics can vary greatly from site to site. Once the performance of a given system is understood, inspections should continue at set intervals. For example, quarterly, semi annually, annually, at the beginning and/or end of an annual rainy season, etc. Without regular inspections, the need for maintenance can easily be overlooked, which can allow a system to become clogged or damaged and that will affect its performance and longevity.

Inspection Equipment

The following list of items are suggested for a successful inspection:

- Inspection Form
- Flashlight
- Camera
- Digital O_2 meter
- Communication device
- Manhole hook or appropriate tools to access hatches and covers
- Appropriate traffic control signage, cones, barricades, etc.
- Measuring pole and/or tape measure
- Protective clothing and eye protection

Note: Entering a confined space requires appropriate safety equipment and personnel certification. Though entry is generallynot required during a routine inspection, you should be prepared to enter by having the proper staff and equipment.

Inspection Steps

The key to any successful stormwater BMP maintenance program is routine inspections. The inspection steps required on the underground detention, retention, or infiltration system are quickand easy. During the first year, plan to inspect the system more frequently to gather data about the upstream watershed and how trash, debris, and sediment affects the system. This information, which may vary greatly between project sites, will be used to establish an appropriate inspection and maintenance program.

Oftentimes and especially during routine visits, the underground system can be inspected though visual observation without having to enter. In any case, all necessary pre-inspection steps must be completed prior to beginning the inspection, especially traffic control and other safety measures. Deploying these measures properly protects the inspector and nearby pedestrians from any dangers associated with open access hatches or manholes. Once the atmosphere inside the system has been tested and deemed safe, remove the access covers and begin the inspection process:

- Prepare the inspection form by completing the necessary information including project name, location, date & time, unit number, and other information (see inspection form).
- Observe the upstream drainage area. Identify and note such things as sources of pollution, sediment, trash, debris, staining, high water marks, inlet clogging, etc.
- Peer into each access opening to observe the inside of the system. Utilize a flashlight or other light source as needed to see inside the system.
- Note and photograph items such as:
  - Obstructions or clogging in the inflow and outflow pipes.
  - Accumulation of trash and debris.
  - Condition of modules – dirty, clean, staining, cracking, spalling, misalignment, etc.
- For detention and retention systems look for signs that stormwater is leaking from the system.
- For infiltration systems look for signs of clogging and/or heavy accumulation of sediment.
- Some other items to note on the form:
  - Estimated amount of floatable debris accumulated in the system.
  - Depth of accumulated sediment.
- Use inspection observations and measurements to determine if maintenance is required.

Maintenance Indicators

The following list of inspection observations may indicate the need for maintenance:

- Damaged inlet and outlet pipes.
- Obstructions in the system or its inlet or outlet.
- Excessive accumulation of floatables.
- Excessive accumulation of sediment of more than 6" in depth.
- Damaged joint sealant.

STORMPRISM INSPECTION FORM

Project Name _____

Project Address _____
Number and Street City Zip

Project Owner _____

Site Contact _____ ( ) – _____
Phone

Inspector Name _____ ( ) – _____
Phone

For Official Use Only

Reviewed By _____

Date _____

Time _____ am pm

Date _____

Inspection Type ☐ Routine ☐ Follow Up ☐ Complaint ☐ Post Storm

Storm Event in last 72 hours? ☐ Yes ☐ No

Weather Condition _____

Other Notes:

System Type ☐ Detention ☐ Retention ☐ Infiltration

Site Map I.D.	System GPS Coordinates	System Model Number	Inspection of Inlet/Outlet Pipes, Joints, Connection Between Modules	Trash/Sediment Accumulation	Structural Notes	Functioning Per Manufacturer's Specifications? (If not, explain)
	Latitude Longitude					
	Latitude Longitude					
	Latitude Longitude					
	Latitude Longitude					
	Latitude Longitude					
	Latitude Longitude					

Notes:

240 W Los Angeles Avenue, Simi Valley, CA 93065 (805) 527–0841 | Office info@pre-conproducts.com

Maintenance Equipment

While maintenance can be done fully by hand it is recommended that a vacuum truck be utilized to minimize time requirements required to maintain the StormPrism system:

- Environmental Maintenance Form
- Flashlight
- Manhole hook or appropriate tools to access hatches and covers
- Appropriate traffic control signage and procedures
- Measuring pole and/or tape measure
- Protective clothing and eye protection
- Vacuum truck
- Trash can
- Pressure washer
- Note: Entering a confined space requires appropriate safety and certification. It is generally not required for routine inspections of the system. Entry into the system will be required if maintenance is required.

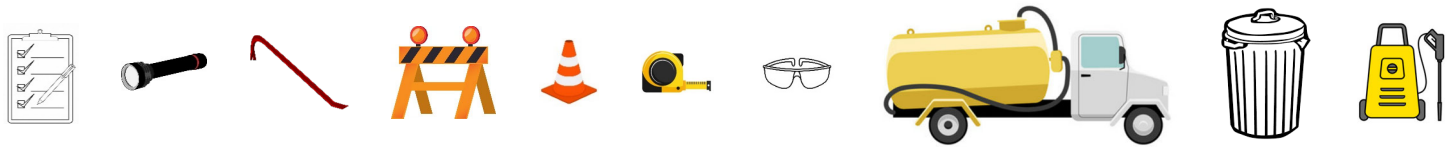

Maintenance Procedures

It is recommended that maintenance occurs at least three days after the most recent rain event to allow for drain down of the system and any upstream detention systems designed to drain down over an extended period of time. Maintaining the system while flows are still entering it will increase the time and complexity required for maintenance. Once all safety measures have been set up cleaning of the system can proceed as followed:

- Using an extension on a boom on the vacuum truck, position the hose over the opened man way and lower into the system. Remove all floating debris, standing water and sediment from the system. A power washer can be used as needed to loosen sediments that have become hardened and stuck to the walls and columns. Repeat the same procedure at each manway until the system has been fully maintained.

If maintenance requires entry into the vault:

- Following rules for confined space entry use a gas meter to detect the presence of any hazardous gases. If hazardous gases are present do not enter the vault. Follow appropriate confined space procedures, such as utilizing venting system, to address the hazard. Once it is determined to be safe, enter utilizing appropriate entry equipment such as a ladder and tripod with harness.

- The last step is to replace all manhole covers and remove all traffic control measures.
- All debris and pollutants removed from the system shall be disposed of following state and local requirements.

Infiltration Basin[1] Maintenance Plan for SHADOWBOX STUDIOS

8/9/22

Project Address and Cross Streets Railroad Avenue and 13th Street

Assessor's Parcel No or Tract Map No.: Tract Map #83513

Property Owner: Jeff Weber Phone No.: (949) 955-3555

Designated Contact: Jeff Weber Phone No.: (949) 955-3555

Mailing Address: 1415 Constitution Road SE, Atlanta, GA 30316

The property contains 1 bioretention area(s), located as described below and as shown in the attached site plan[2].

- **Infiltration Basin No. 1** is located at the north west corner to the property at Railroad Avenue and 13th Street.

I. Routine Maintenance Activities

The principal maintenance objective is to prevent sediment buildup and clogging, which reduces pollutant removal efficiency and may lead to infiltration basin failure. Routine maintenance activities, and the frequency at which they will be conducted, are shown in Table 1.

Table 1
Routine Maintenance Activities for Infiltration Area

No.	Maintenance Task	Frequency of Task
1	Remove obstructions, debris and trash from infiltration area and dispose of properly.	Monthly, or as needed after storm events
2	Inspect infiltration area to ensure that it drains between storms and within five days after rainfall.	Monthly, or as needed after storm events
3	Inspect inlets for channels, soil exposure or other evidence of erosion. Clear obstructions and remove sediment.	Monthly, or as needed after storm events
4	Remove and replace all dead and diseased vegetation.	Twice a year
5	Maintain vegetation and the irrigation system. Prune and weed to keep infiltration area neat and orderly in appearance.	Before wet season begins, or as needed
6	Check that mulch is at appropriate depth (3 inches per soil specifications) and replenish as necessary before wet season begins.	Monthly
7	Inspect infiltration area using the attached inspection checklist.	Monthly, or after large storm events, and after removal of accumulated debris or material

II. Prohibitions

The use of pesticides and quick release fertilizers shall be minimized, and the principles of integrated pest management (IPM) followed:

1. Employ non-chemical controls (biological, physical and cultural controls) before using chemicals to treat a pest problem.

[1] Infiltration areas include linear treatment measures designed for water to filter through native soils.
[2] Attached site plan must match the site plan exhibit to Maintenance Agreement.

2. Prune plants properly and at the appropriate time of year.
3. Provide adequate irrigation for landscape plants. Do not over water.
4. Limit fertilizer use unless soil testing indicates a deficiency. Slow-release or organic fertilizer is preferable. Check with municipality for specific requirements.
5. Pest control should avoid harming non-target organisms, or negatively affecting air and water quality and public health. Apply chemical controls only when monitoring indicates that preventative and non-chemical methods are not keeping pests below acceptable levels. When pesticides are required, apply the least toxic and the least persistent pesticide that will provide adequate pest control. Do not apply pesticides on a prescheduled basis.
6. Sweep up spilled fertilizer and pesticides. Do not wash away or bury such spills.
7. Do not over apply pesticide. Spray only where the infestation exists. Follow the manufacturer's instructions for mixing and applying materials.
8. Only licensed, trained pesticide applicators shall apply pesticides.
9. Apply pesticides at the appropriate time to maximize their effectiveness and minimize the likelihood of discharging pesticides into runoff. With the exception of pre-emergent pesticides, avoid application if rain is expected.
10. Unwanted/unused pesticides shall be disposed as hazardous waste.

Standing water shall not remain in the treatment measures for more than five days, to prevent mosquito generation. Should any mosquito issues arise, contact the Alameda County Mosquito Abatement District (ACMAD), as needed for assistance. In Albany, contact the Alameda County Vector Control Services District (ACVCSD). Mosquito larvicides shall be applied only when absolutely necessary, as indicated by the ACMAD or ACVCSD, and then only by a licensed professional or contractor. Contact information for ACMAD and ACVCSD is provided below.

III. Vector Control Contacts

IV. Inspections

The attached Infiltration Area Inspection and Maintenance Checklist shall be used to conduct inspections monthly (or as needed), identify needed maintenance, and record maintenance that is conducted.

Infiltration Basin

Inspection and Maintenance Checklist

Property Address: _____ Property Owner: Jeff Weber

Treatment Measure No.: _____ Date of Inspection: _____ Type of Inspection: ☐ Monthly ☐ Pre-Wet Season ☐ After heavy runoff ☐ End of Wet Season ☐ Other:_____

Inspector(s): _____

Defect	**Conditions When Maintenance Is Needed**	**Maintenance Needed? (Y/N)**	**Comments** (Describe maintenance completed and if needed maintenance was not conducted, note when it will be done)	**Results Expected When Maintenance Is Performed**
1. Standing Water	When water stands in the infiltration area between storms and does not drain within five days after rainfall.			There should be no areas of standing water once inflow has ceased. Any of the following may apply: sediment or trash blockages removed, improved grade from head to foot of infiltration area, or added underdrains.
2. Trash and Debris Accumulation	Trash and debris accumulated in the infiltration area.			Trash and debris removed from infiltration area and disposed of properly.
3. Sediment	Evidence of sedimentation in infiltration area.			Material removed so that there is no clogging or blockage. Material is disposed of properly.
4. Erosion	Channels have formed around inlets, there are areas of bare soil, and/or other evidence of erosion.			Obstructions and sediment removed so that water flows freely and disperses over a wide area. Obstructions and sediment are disposed of properly.
5. Vegetation	Vegetation is dead, diseased and/or overgrown.			Vegetation is healthy and attractive in appearance.
6. Mulch	Mulch is missing or patchy in appearance. Areas of bare earth are exposed, or mulch layer is less than 3 inches in depth.			All bare earth is covered, except mulch is kept 6 inches away from trunks of trees and shrubs. Mulch is even in appearance, at a depth of 3 inches.
7. Miscellaneous	Any condition not covered above that needs attention in order for the infiltration area to function as designed.			Meet the design specifications.

NDS Approved Template Revised 11/28/11

APPENDIX F

Developed Condition USMP/LID Exhibit

SHADOWBOX STUDIOS
LID/USMP EXHIBIT

9/15/22

VICINITY MAP
NOT TO SCALE

USMP NOTES

1. ALL STRUCTURAL BMP'S SHALL BE ACCESSIBLE FOR INSPECTION AND MAINTENANCE AND SHALL HAVE A MINIMUM DIAMETER OF 30 INCHES. SIGNS IN TRAFFIC RATED PART PER DETAIL HEREIN. STENCIL IS AVAILABLE AT ANY OF THE LOCAL HOME IMPROVEMENT STORES.

2. PRIOR TO COMMENCEMENT OF ANY WORK WITHIN THE ROAD RIGHT OF WAY AND/OR ADJACENT TO THE STATE HIGHWAY SYSTEM, STORMDRAIN, AN ENCROACHMENT PERMIT FROM CONSTRUCTION DIVISION IS REQUIRED. FOR MORE INFORMATION CALL (626) 458-3120

3. PRIOR TO COMMENCEMENT OF ANY WORK WITHIN WATERCOURSE OR ADJACENT TO WATERCOURSE, A PERMIT FROM BOTH THE CALIFORNIA DEPARTMENT OF FISH AND WILDLIFE AND THE ARMY CORPS OF ENGINEERS MAY BE REQUIRED.

CATCH BASIN STENCIL DETAIL

ALL CATCH BASIN AND INLETS THAT DISCHARGE INTO AN EXISTING OR PROPOSED STORM DRAIN MUST BE STENCILED WITH A MESSAGE TO PREVENT DUMPING OF POLLUTANTS. STENCIL SHALL HAVE A MINIMUM DIAMETER OF 30 INCHES. THIS SITE HAS APPROXIMATELY 48 CATCH BASINS/INLETS.

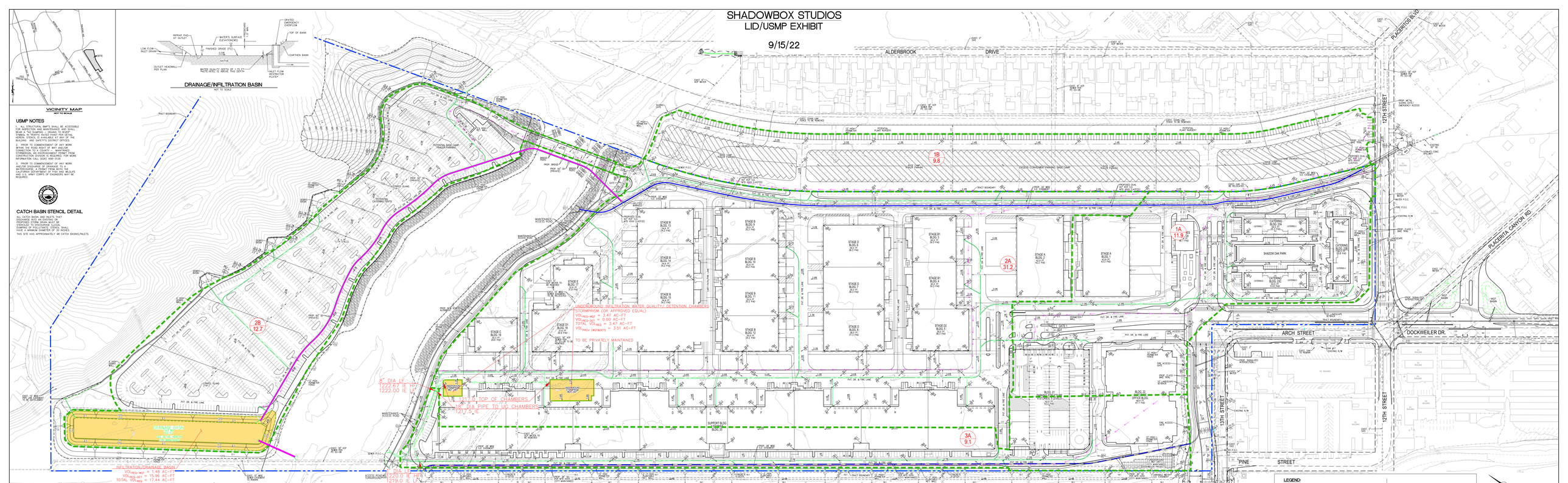

LID - DEVELOPED CONDITION HYDROLOGIC PARAMETERS

SUBAREA	AREA	OVERLAND FLOW LENGTH	OVERLAND FLOW SLOPE	IEUA % STORM	IMP	SOIL	DFA #	SWQDv	VOLUME PROVIDED	SWQDT	FUDWAWTS PROVIDED
	ac	ft	ft/ft	in	%		cf	ac-ft	cf	ac-ft	cfs
1A	11.9	1500	0.012	0.98	90	20	9	34427	-	-	1.95	-
1B	31.2	2900	0.006	0.98	90	20	9	90269	-	-	3.95	-
1A+1A	43.1								-	-	5.95	9.87
2A	9.1	2450	0.009	0.98	91	20	9	26565	-	-	1.16	2.79
TOTAL A	52.2				-	-	-	151293	3.47	152776	3.51	7.21	6.25
1B	9.8	2470	0.005	0.98	91	20	9	28629	-	-	1.31	1.96
2B	12.7	1880	0.010	0.98	87	20	9	35867	-	-	1.84	-
TOTAL B	22.5				-	-	-	64496	1.48	804822	17.56	3.20	N/A*

*SUBAREAS 1B AND 2B DO NOT HAVE A SPLITTER AS THEIR ENTIRE CORRESPONDING HYDROLOGY SUBAREAS BOTH FLOW TO THE DRAINAGE BASIN FOR TREATMENT/DETENTION

ALLIANCE
LAND PLANNING & ENGINEERING, INC.
CIVIL ENGINEERING • LAND PLANNING • RELATED SITEWORK & SURVEYING
2108 CENTURY AVE.
SANTA ANA, CA 92705
TEL (714) 545-9696
FAX (714) 545-9697
2743 SUMMIT DRIVE
SUITE 100
LONE TREE, CO 80124
TEL (303) 790-1700

C:\ALLIANCE\JOBS\SHADOWBOX\LID\LID_USMP\LID-USMP.DWG

APPENDIX I-4
HYDRAULIC AND SEDIMENT TRANSPORT ANALYSES

HYDRAULIC
AND
SEDIMENT TRANSPORT ANALYSES
FOR
BLACKHALL STUDIOS

January 19, 2022

Will sign and stamp upon approval

Wayne W. Chang, MS, PE 46548

ChangConsultants
Civil Engineering ◦ Hydrology ◦ Hydraulics ◦ Sedimentation

P.O. Box 9496
Rancho Santa Fe, CA 92067
(858) 692-0760

FOR REVIEW ONLY

TABLE OF CONTENTS

Introduction.....1
Hydraulic Analyses.....2
Sediment Transport Analyses.....4
Local Scour.....4
FLUVIAL-12 Model.....5
FLUVIAL-12 Input.....6
FLUVIAL-12 Results.....10
Conclusion.....11
FIRMette.....15

APPENDICES

A. HEC-RAS Analyses
B. FLUVIAL-12 Analyses

MAP POCKET

Tentative Map
HEC-RAS and FLUVIAL-12 Work Map

FOR REVIEW ONLY

INTRODUCTION

Blackhall Studios (Project) is a proposed full purpose film and television production studio that will be developed on a 93.5-acre site along the north and south sides of Placerita Creek east of Railroad Avenue in the City of Santa Clarita (see the Vicinity Map). Placerita Creek is a natural channel along the site. The tentative map (TM) has been prepared by Alliance Land Planning & Engineering, Inc. (Alliance), and is included in the map pocket. The TM proposes over 1.2 million square feet of sound stages, support services/buildings, office buildings, and associated amenities south of Placerita Creek. A portion of the Project parking will be located on the north side of Placerita Creek. A vehicular bridge will be constructed at the easterly side of the Project to provide access across Placerita Creek between the parking lot and production areas.

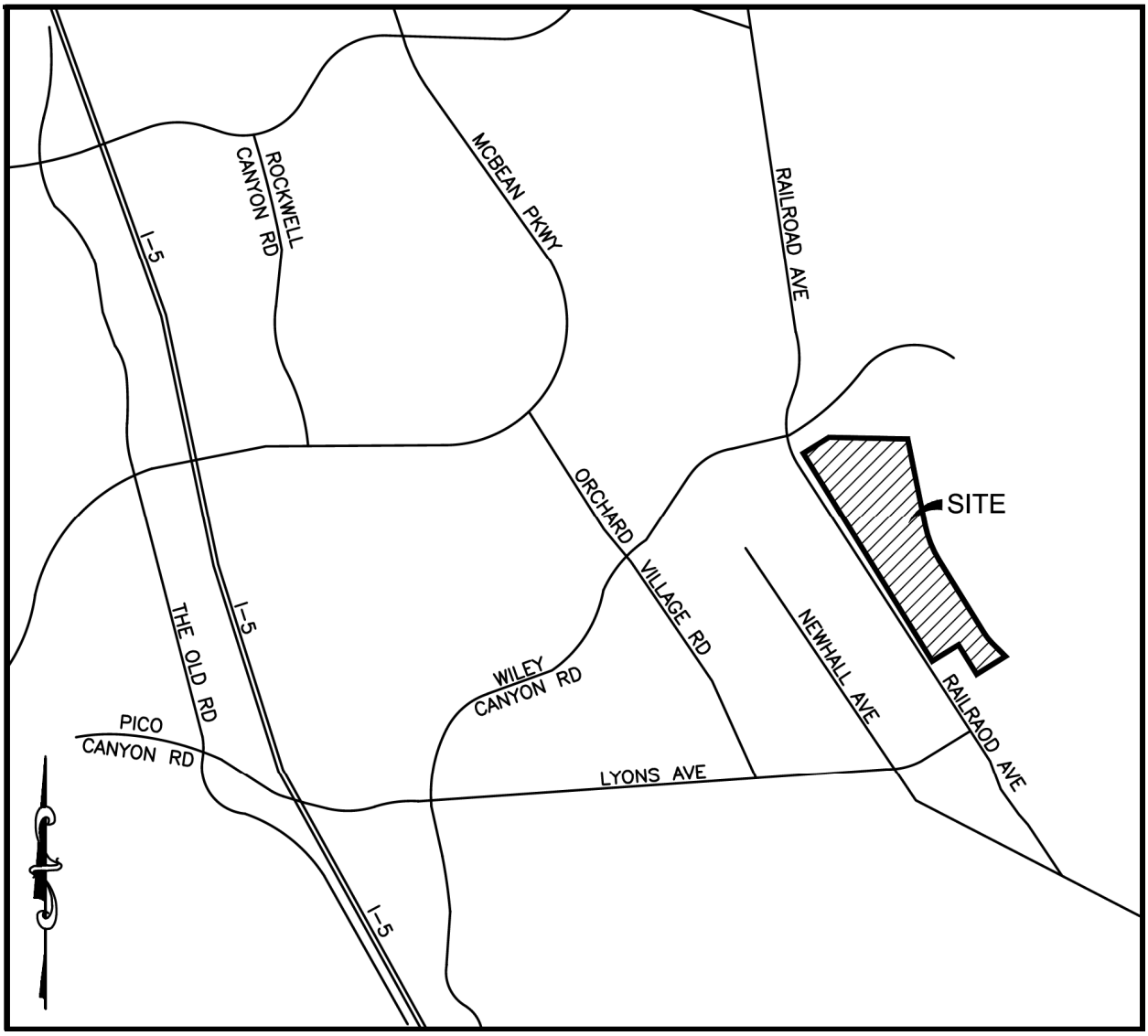

Figure 1. Vicinity Map

The Federal Emergency Management Agency (FEMA) recently remapped the Placerita Creek 100-year floodplain, 500-year floodplain, and regulatory floodway along the site. The remapping is based on detailed HEC-RAS hydraulic analyses. The Flood Insurance Rate Map (FIRM) numbers are 06037C0818G and 06037C0819G, dated June 2, 2021. A FIRMette is included after this report text delineating the floodplains and floodway. The FIRMette shows that the regulatory floodway generally covers the natural creek channel. The 100-year and 500-year floodplains extend beyond the natural channel in some areas and inundate portions of the site. The Project proposes grading to ensure that the insurable structures and bridge will have at least 1-foot of freeboard over the 100-year water surface elevations. The proposed grading will avoid encroaching into the floodway and the only permanent encroachment will be from the bridge piers. The Placerita Creek Overflow flows in a southeasterly to northwesterly direction through the site. Alliance will analyze and design drainage facilities to convey Placerita Creek Overflow, so this watercourse is not covered in this report.

This report contains hydraulic and sediment transport analyses of Placerita Creek for Alliance's grading plan. The analyses are used to establish the proposed condition 100-year water surface elevations and determine the potential for creek erosion along the site. Scour countermeasures are recommended, as needed. At the time of this report, detailed design of the bridge was not available, so the bridge has been modeled based on conceptual information.

HYDRAULIC ANALYSES

Hydraulic analyses of Placerita Creek at and near the site were performed for existing and proposed conditions. Although the FEMA study contains an existing condition HEC-RAS model, this was updated based on the Project's 1-foot contour interval topographic mapping (NAVD 88). The updated existing condition and proposed condition hydraulic analyses were used to determine and compare 100-year water surface elevations associated with the Project. The U.S. Army Corps of Engineer's HEC-RAS program was used for the hydraulic analyses. The following describes the HEC-RAS input data and results.

FEMA's HEC-RAS model was obtained and modified. The existing and proposed condition analyses prepared for this report extend from FEMA cross-section 137 (downstream limit) at the Placerita Creek confluence with Newhall Creek to cross-section 5474 approximately 3,500 feet upstream of the site (see the HEC-RAS and FLUVIAL-12 Work Map for the cross-sections near the site). The FEMA cross-sections (and bridges) were duplicated except from cross-sections 424 to 1680, which were updated based on the Project's topographic mapping. In addition, cross-sections 1760 and 1830 were added along the downstream and upstream edges of the proposed bridge. The proposed condition analysis is based on the existing condition analysis except that the appropriate cross-sections were modified to reflect the Project grading and bridge. The bridge is currently modeled with a 38-foot width, 4-foot thick deck, and two 4-foot diameter piers. The bridge will be designed to pass the 100-year flood with at least 1-foot of freeboard.

The additional HEC-RAS parameters are as follows. The FEMA roughness coefficients along the site are 0.040 in the main channel and primarily 0.050 in the overbank areas adjacent to the main channel. Some overbank areas were assigned a roughness of 0.13, but current conditions

reflect a value closer to 0.050. The existing condition model uses a roughness coefficient of 0.040 in the main channel and 0.050 in the overbanks. The proposed condition uses the same values, but 0.050 along the proposed grading to reflect landscaping. The FEMA 100-year flow rate of 4,106 cubic feet per second (cfs) was used. The FEMA model includes lateral structures to estimate flow over the left overbank. The lateral flows vary from 144 to 208 cfs along the Project. Since the lateral flow is relatively small compared to the 100-year flow rate along the Project, review of the FEMA cross-sections does not reveal lateral flow in many areas, and the proposed grading will prevent lateral flow beyond the left overbank, the analyses are based on 4,106 cfs. This will yield slightly conservative (higher) water surface elevations. Finally, the downstream boundary condition is based on normal depth with a longitudinal slope of 1.3 percent similar to the FEMA model.

The 100-year existing and proposed condition HEC-RAS results are included in Appendix A. Table 1 summarizes and compares the results along the Project. Cross-section 398 is just downstream of the west edge of the site and upstream of existing railroad tracks. Cross-section 1786.5 is along the proposed vehicular bridge. Cross-section 1813 is near the east edge of the site and cross-section 1941 is just upstream of the site. Table 1 shows that the proposed condition 100-year water surface elevations are similar to the existing condition water surface elevations downstream of the proposed bridge. The water surface elevation experiences an increase immediately upstream of the proposed bridge due to the piers, but the increase vanishes upstream at cross-section 1941.

Cross-section	100-Year Water Surface Elevations, feet (NGVD 88)		
	Existing Conditions	Proposed Conditions	Proposed – Existing Conditions
1,941	1233.36	1233.36	0.00
1,813	1229.29	1230.08	0.79
1,786.5		Prop. Bridge	
1,760	1228.84	1228.84	0.00
1,680	1227.69	1227.68	-0.01
1,413	1224.63	1224.66	0.03
1,165	1221.19	1221.17	-0.02
930	1219.57	1219.58	0.01
818	1219.46	1219.47	0.01
611	1219.44	1219.44	0.00
424	1219.35	1219.35	0.00
398	1219.17	1219.17	0.00

Table 1. Summary of HEC-RAS Results

The grading provides at least 1-foot of freeboard above the proposed condition 100-year water surface elevations in Table 1. The bridge also has over 1-foot of freeboard. Finally, the Project does not raise the water surface elevations in the off-site cross-sections.

The HEC-RAS results in Appendix A show that the 100-year flow velocities exceed 5 feet per second (fps) at cross-sections 1165 to 1813 along the upstream portion of the Project. Velocities in excess of 5 to 6 fps are generally considered to be erosive. A revetment will be constructed along the channel banks along these cross-sections to prevent scour. The revetment material will be decided further into the permitting process. The top of revetment shall be designed to be at least 1-feet above the proposed condition water surface elevations in Table 1. The toe of revetment shall extend below the predicted scour depth, which is analyzed in the next section.

SEDIMENT TRANSPORT ANALYSES

Natural stream areas can experience scour (channel bed lowering or widening) and deposition (channel bed fill). Stream bed scour consists of general scour and local scour. General scour is related to the sediment supplied into and transported out of a channel reach. Local scour is due to a local flow obstruction by a bridge pier/bent or abutment. The total scour is the general scour plus the local scour. The total scour must be considered in the design of the proposed bridge and toe-down for the buried revetment, and is analyzed in this section.

Local Scour

A local scour analysis was performed to determine the proposed bridge's pier scour, which is associated with accelerated flow and the resulting vortices leading to a removal of material near a bridge pier. Local scour can also consist of abutment scour. However, the proposed bridge does not contain abutments that encroach into the creek channel, so abutment scour is not analyzed. The Colorado State University (CSU) equation from the Hydraulic Engineering Circular No. 18 (HEC-18) is the standard pier scour formula and has the following form:

$$y_s/a = 2.0\ K_1\ K_2\ K_3\ (y_1/a)^{0.35}\ F_r^{0.43}$$

where,

y_s = scour depth, feet
y_1 = flow depth directly upstream of the pier, feet
a = pier width
K_1 = correction factor for pier nose shape
K_2 = correction factor for angle of attack of flow
K_3 = correction factor for bed condition
F_r = Froude Number directly upstream of pier

The CSU equation input values are based on: y_1 = flow depth from the HEC-RAS 100-year results at cross-section 1786.5 upstream of the bridge, a = proposed concrete pile diameter, K_1 = 1.0 for cylindrical/round nose piers, K_2 = 1.0 for no angle of attack, K_3 = 1.1 for a plane bed, and F_r = Froude number from the HEC-RAS. Table 2 summarizes the pier scour input and results for the proposed bridge.

Condition	y_1, ft	a, ft	F_r	y_S, ft
Proposed	8.9	4.0	1.01	4.03

Note: $K_1 = 1.0$, $K_2 = 1.0$, $K_3 = 1.1$

Table 2. Pier Scour Analysis

The total scour is the pier scour plus the general scour. HEC-RAS assumes that the channel boundary (bed and banks) is rigid, so will not change. HEC-RAS (including the sediment transport feature) does not have the capability to accurately model physical changes that can occur in a natural system such as this study reach of Placerita Creek. Consequently, the FLUVIAL-12 model was used to assess sediment transport and general scour, which is covered in the following subsections.

FLUVIAL-12 Model

Stream hydraulics, sediment transport, and channel changes may be studied through physical modeling, mathematical modeling, or both. Physical modeling has been relied upon traditionally for stream projects, but mathematical modeling has become popular as this capability expands rapidly. The FLUVIAL-12 program is a mathematical model that has been formulated and developed since 1972 for water and sediment routing in natural and improved streams. The combined effects of flow hydraulics, sediment transport, and stream channel changes are simulated for given flow events and periods.

The model simulates the inter-related changes in channel-bed profile and channel width based upon a streams tendency to seek uniformities in sediment discharge and power expenditure. At each time step, scour and fill in a channel bed are computed based on the spatial variation in sediment discharge along the channel. Channel-bed corrections for scour and fill will reduce the non-uniformity in sediment discharge. Width changes are also made at each time step, resulting in a movement toward uniformity in power expenditure along the channel. Because the energy gradient is a measure of the power expenditure, uniformity in power expenditure also means a uniform energy gradient or linear water surface profile. A creek channel may not have a uniform power expenditure or linear water-surface profile, but it is constantly adjusting itself toward that direction. The FLUVIAL-12 model was calibrated using twelve sets of field data. Such calibration studies are listed in the FLUVIAL-12 User's Manual. Most of the calibration studies were peer-reviewed.

FLUVIAL-12 is applicable to ephemeral streams (such as Placerita Creek), streams with minor base flow as well as streams with long-term, continuous flow. Because dynamic changes have transient behavior, ephemeral streams require more complicated model formulation techniques. Stream impacts simulated by the FLUVIAL-12 model include channel bed scour and fill (aggradation and degradation), width variation, and bed topography changes induced by channel curvature (i.e., bend scour associated with channel curvature). These inter-related changes are coupled at individual time steps over an entire flow event or series of flow events. While the model is applicable for erodible channels, physical constraints such as bank protection or armoring, grade-control structures, bedrock outcroppings, etc. may also be specified. Furthermore, the erodible material limits, bank erodibility, angle of repose, and channel roughness (e.g., channel bed and bank material, vegetation density, etc.) are included. Typical

model applications include evaluations of bridge scour, sand and gravel mining, channelization, sediment delivery, etc.

FLUVIAL-12 is an *erodible-boundary* model. An erodible-boundary model is different from an erodible-bed model such as HEC-6, HEC-6T, and the sediment transport module in HEC-RAS in some or all of following ways:

1. An erodible-bed model does not simulate channel width changes. Since channel-bed profile changes are closely related to width changes, these should not be separated.

2. An erodible-bed model assumes uniform channel bed profile changes in the erodible zone, i.e., all cross-section points adjust up and down by an equal amount during aggradation and degradation. Actual bed changes are not uniform and, therefore, may not be accurately simulated by an erodible-bed model.

3. An erodible-bed model does not consider channel curvature. In reality, bed topography is highly non-uniform in a curved channel, especially during high flow.

4. An erodible zone needs to be specified at cross-sections in an erodible-bed model. The model does not determine the extent of channel erosion. The user has to delineate the erodible portion of the channel bed. On the other hand, the erosion boundary is computed and provided by the FLUVIAL-12 model, and the boundary changes with discharge and time.

5. Sediment inflow into the channel reach needs to be specified for other models. This requires a sediment rating curve, which is typically not available for stream channels. In the FLUVIAL-12 model, the sediment inflow may be specified or it may be computed based on the upstream cross-section flow hydraulics.

6. FLUVIAL-12 has been tested and calibrated with field data from several streams in both semi-arid and humid regions. An erodible-bed model may not be calibrated with field data of natural streams.

For the reasons described above, the FLUVIAL-12 model is appropriate for sediment transport analysis of Placerita. The following section describes the current model input.

FLUVIAL-12 Input

The FLUVIAL-12 model is based on cross-sectional data similar to the HEC-RAS model. The FLUVIAL-12 cross-sections are based on the proposed condition HEC-RAS cross-sections discussed above. The FLUVIAL-12 cross-sections are truncated to exclude ineffective flow areas. In addition, FLUVIAL-12 requires a flow hydrograph, bed material gradations, an appropriate sediment transport formula, and sediment inflow. The following paragraphs discuss these input parameters.

The FLUVIAL-12 model includes flow hydrograph data. A flow hydrograph represents the relationship between flow rate (cubic feet per second) versus time (hours) for a given flood (e.g., the 100-year flood). Figure 2 contains the 100-year flow hydrograph, which was based on Jensen Design & Survey, Inc.'s approved *Hydrology Report, Placerita Canyon Watershed.* Jensen's hydrograph is near the downstream end of Placerita Creek. Their peak flow is slightly higher than the FEMA flow rate of 4,106 cfs. The 100-year hydrograph used in FLUVIAL-12 was based on Figure 2 adjusted to a peak flow rate of 4,106 cfs.

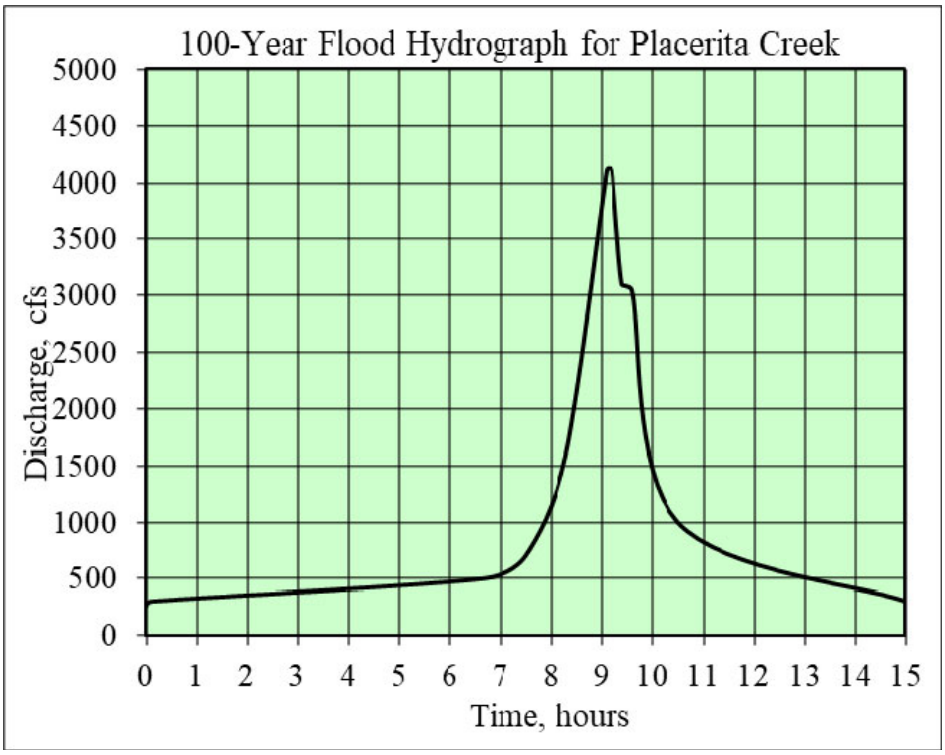

Figure 2. 100-Year Hydrograph

A FLUVIAL-12 analysis was also performed using a long-term flood series hydrograph. The definition of flood frequency indicates that over a 100-year period Placerita Creek should experience, statistically, one event that meets or exceeds the 100-year peak flow, two events that meet or exceed the 50-year peak flow, four events that meet or exceed the 25-year peak flow, 10 events that meet or exceed the 10-year peak flow, etc. Smaller events have limited discharge and hence transport capacity. Consequently, events smaller than the 10-year have been excluded. The sequence of flood events occurs randomly and cannot be predicted, but the order of events does not significantly affect the results pertaining to long-term sediment delivery. Figure 3 contains the flood series hydrograph used for the simulation. In the flood series, the overall flood duration is shortened by connecting the individual hydrographs back-to-back.

The channel bed material composition must be input since sediment transport is dependent on bed material. The channel bed material was assessed during a site visit. To consider time-dependent and non-equilibrium sediment transport, the bed material at each cross-section is

modeled in FLUVIAL-12 as five size fractions based on the grain-size distribution. Each size fraction is represented by its geometric mean.

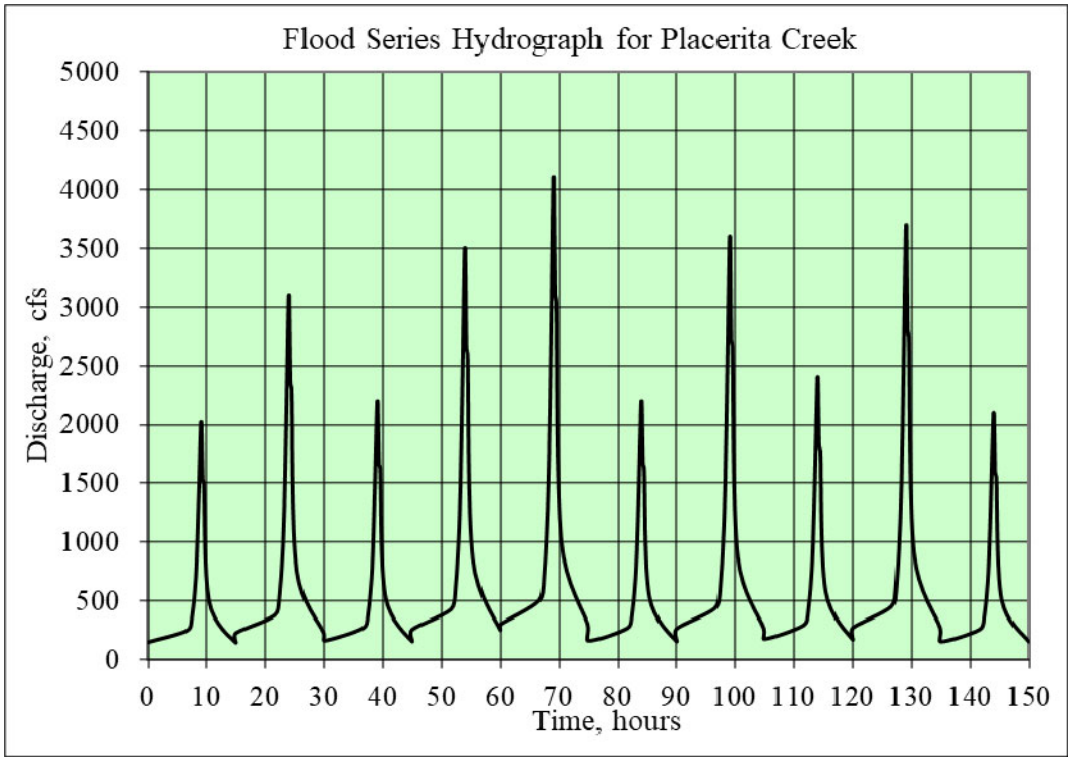

Figure 3. Flood Series Hydrograph

For each size fraction, sediment transport capacity is computed using a sediment-transport formula. The FLUVIAL-12 model allows selection of the following sediment formulas: (1) Engelund-Hansen formula, (2) Yang's unit stream power formula, (3) Graf's formula, (4) Ackers-White formula, (5) Parker, et al. formula for gravel, and (6) Meyer-Peter and Muller bed load formula. Extensive comparison of field measurement with the results using these formulas has been performed previously. Based on these comparisons, it has been determined the Engelund-Hansen formula gives the best correlation between model and actual results for ephemeral streams in semi-arid to arid regions. The Engelund-Hansen formula was selected for the study for the following reasons:

(1) The selection was based on the most extensive evaluation of formulas made by Brownlie (see Figure 4); the Engelund-Hansen formula has the best correlation with field data.

(2) The Engelund-Hansen formula was used in many studies in this region. The results of these studies were verified by field data.

(3) In a calibration study of the FLUVIAL-12 model, the results generated by the Engelund-Hansen formula can be correlated with the measured channel changes in the San Dieguito River during the 1993 flood.

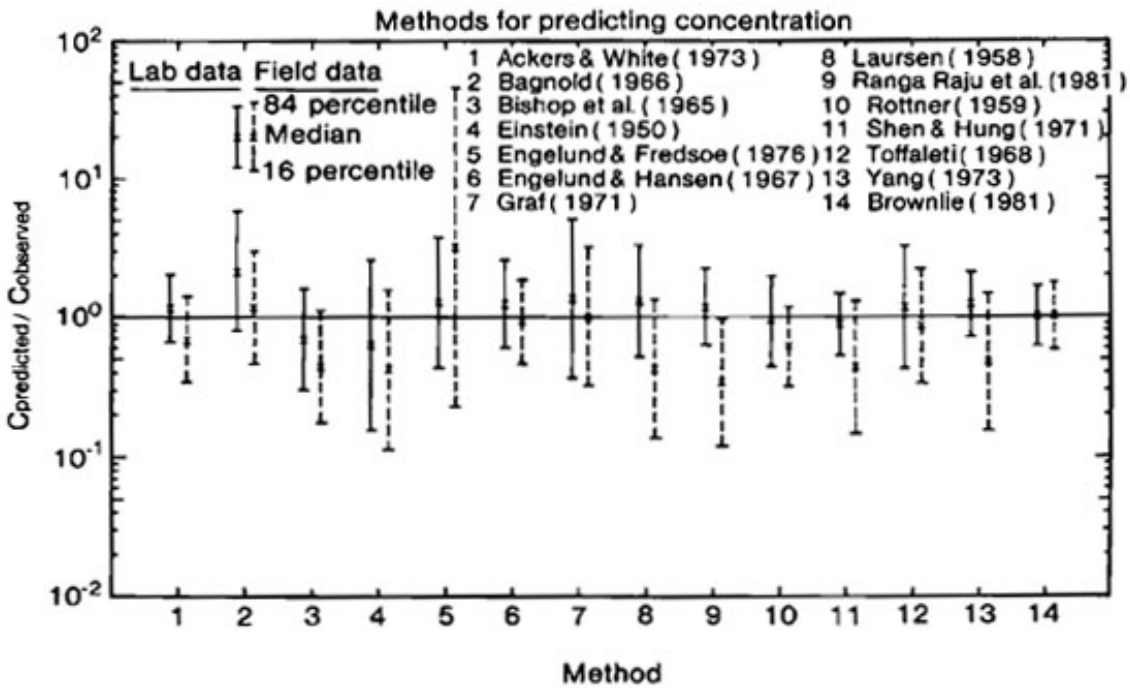

Figure 4. Evaluation of Sediment Transport Formulas by Brownlie

Engelund and Hansen (1967) applied Bagnold's stream power concept and the similarity principle to obtain their sediment transport equation:

$$f' \varphi = 0.1 (\tau_*)^{5/2} \tag{1}$$

$$\text{with } f' = \frac{2gRS}{U^2} \tag{2}$$

$$\varphi = \frac{q_s}{\gamma_s [(s - 1) g d^3]^{1/2}}, \quad \tau_* = \frac{\tau_o}{(\gamma_s - \gamma) d} \tag{3}$$

where f' is the friction factor, d is the median fall diameter of the bed material, φ is the dimensionless sediment discharge, s is the specific gravity of sediment, and τ_* is the dimensionless shear stress or the Shields stress. Substituting Equations. 2 and 3 into Equation 1 yields:

$$C_s = 0.05 \frac{s}{s - 1} \frac{US}{[(s - 1)gd]^{1/2}} \left[\frac{RS}{(s - 1)d}\right]^{1/2} \tag{4}$$

where C_s (= Q_s/Q) is the sediment concentration by weight. This equation relates sediment concentration to the *U-S* product (which is the rate of energy expenditure per unit weight of water) and the *R-S* product (which is the shear stress). Strictly speaking, the Engelund-Hansen formula should be applied to streams with a dune bed in accordance with the similarity principle.

However, it can be applied to upper flow regime with particle size greater than 0.15 mm without serious error. Therefore, the Engelund-Hansen formula was used for the analyses.

Sediment inflow to the upstream end of the study reach can be specified or computed based on the upstream cross-section flow hydraulics. In this case, the study reach was extended significantly upstream of the Project area (approximately 13,000 feet) to allow the program to compute the inflow.

FLUVIAL-12 Results

A proposed condition FLUVIAL-12 analysis was performed for a single 100-year event and the flood series. The results are included in Appendix B. Each output text file consists of several sections. The first section contains the input data (modeling parameters, hydrograph(s), size fractions, and cross-sections). This is followed by tabulation of the initial bed material composition at each cross-section. Next, summary output is provided for each cross-section at a variety of time periods in the hydrograph. The summary output lists the water surface elevation (W.S.ELEV.), flow width at the surface (WIDTH), flow depth (DEPTH), flow discharge (Q), mean flow velocity (V), energy gradient (SLOPE), median sediment load size (D50), ratio of bed material discharge to flow discharge (QS/Q), Froude number (FR), and sediment weight passing a cross-section since the beginning of the simulation (SED. YIELD). Within the summary output is detailed output for each cross-section at the peak and end of the flood hydrograph. The detailed output provides the vertical (Z) and horizontal (Y) coordinate of each cross-section point as well as the elevation change during the current time step (DZ) and the total accumulated elevation change since the beginning of the simulation (TDZ).

The flood series results are presented graphically for cross-sections 1165 to 1813 in Figures 5 through 9. Since the flood series represents several flow events over a long-term rather than a single 100-year event, the flood series will govern for assessing channel scour. Cross-sections 1165 to 1813 are cross-sections with flow velocities over 5 feet per second, so subject to changes during flow events. Each plot is looking in the downstream direction and contains the initial channel prior to the flood series event as well as the predicted cross-sectional changes at the peak and end of the flood series event. The maximum scour profile is also included, which reflects the maximum (i.e., lowest) scour elevation at each point in the cross-section during the entire flood series. The maximum scour for each point in a cross-section may occur at different times in the flood series. Therefore, the maximum scour represents a scour envelope rather than scour at a point in time.

Cross-section	Maximum Scour Elevation, feet	Recommended Toe-Down Elevation, feet[1]
1,165	1,215.5	1,210.5
1,413	1,219	1,214
1,680	1,222	1,217
1,760	1,223	1,218
1,813	1,224	1,219

[1]Based on 5-foot factor of safety

Table 2. Scour and Revetment Toe-Down Elevation

The revetment toe-down should extend below the channel bed to the maximum scour elevation in the figures plus a factor of safety. Table 2 summarizes the maximum scour elevation at cross-sections 1165 to 1813 as well as the recommended toe-down based on a 5-foot factor of safety. The revetment should continue downstream of cross-section 1165 until the velocity lowers to below 5 fps.

CONCLUSION

Hydraulic and scour analyses have been performed for Placerita Creek along the Blackhall Studios Project. The FEMA HEC-RAS analysis was used as the baseline model, but updated based on 1-foot contour interval topographic mapping performed for the Project. The results indicate that the grading and conceptual bridge design have adequate freeboard. The bridge shall be designed for local pier scour. A buried revetment will protect proposed channel bank areas that are subject to erosive 100-year flow velocities. The revetment will be covered with soil to support vegetation. The revetment shall extend above the 100-year water surface elevations with 1-foot of freeboard and below the flood series scour depths with a 5-foot factor of safety. The analyses in this report will be updated when the bridge design is available or based on other design refinements.

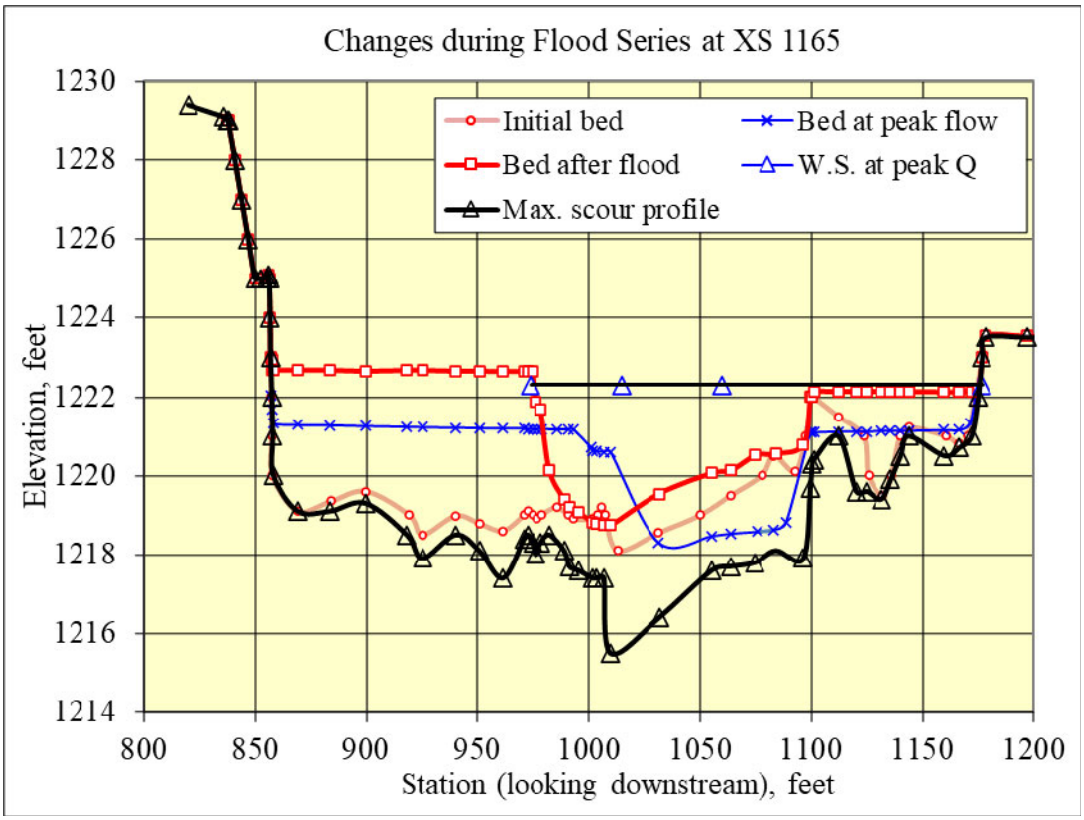

Figure 5. Channel Changes at Cross-section 1165

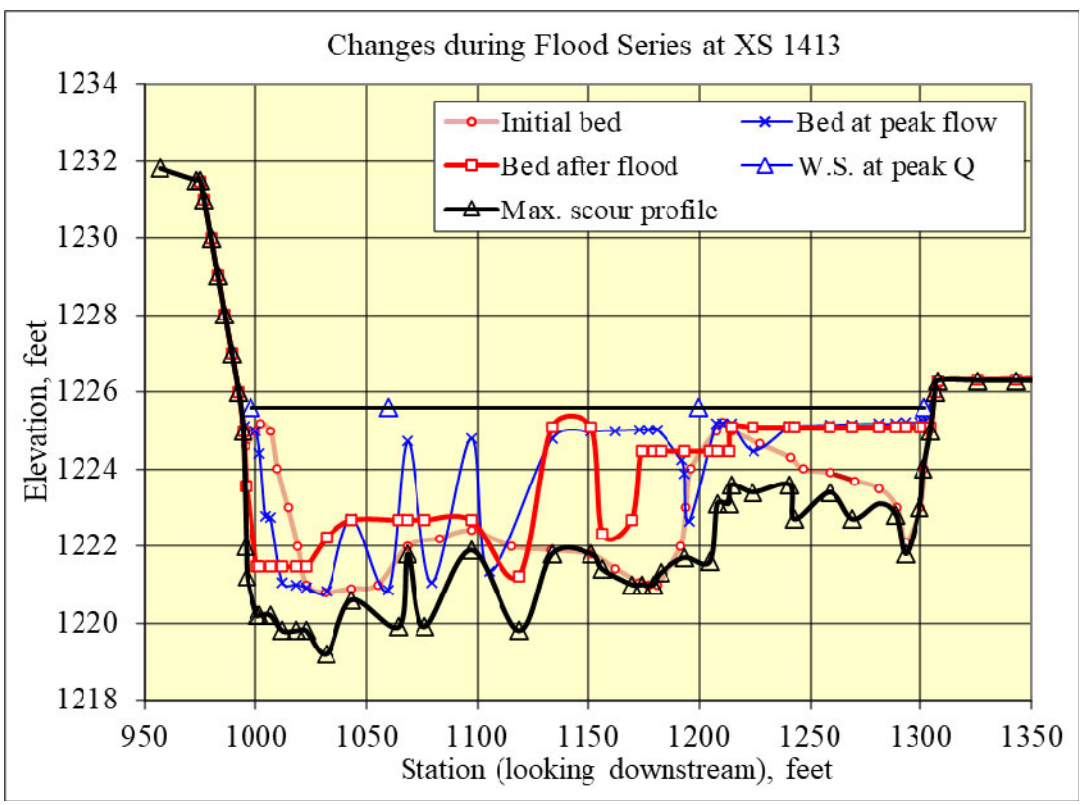

Figure 6. Channel Changes at Cross-section 1413

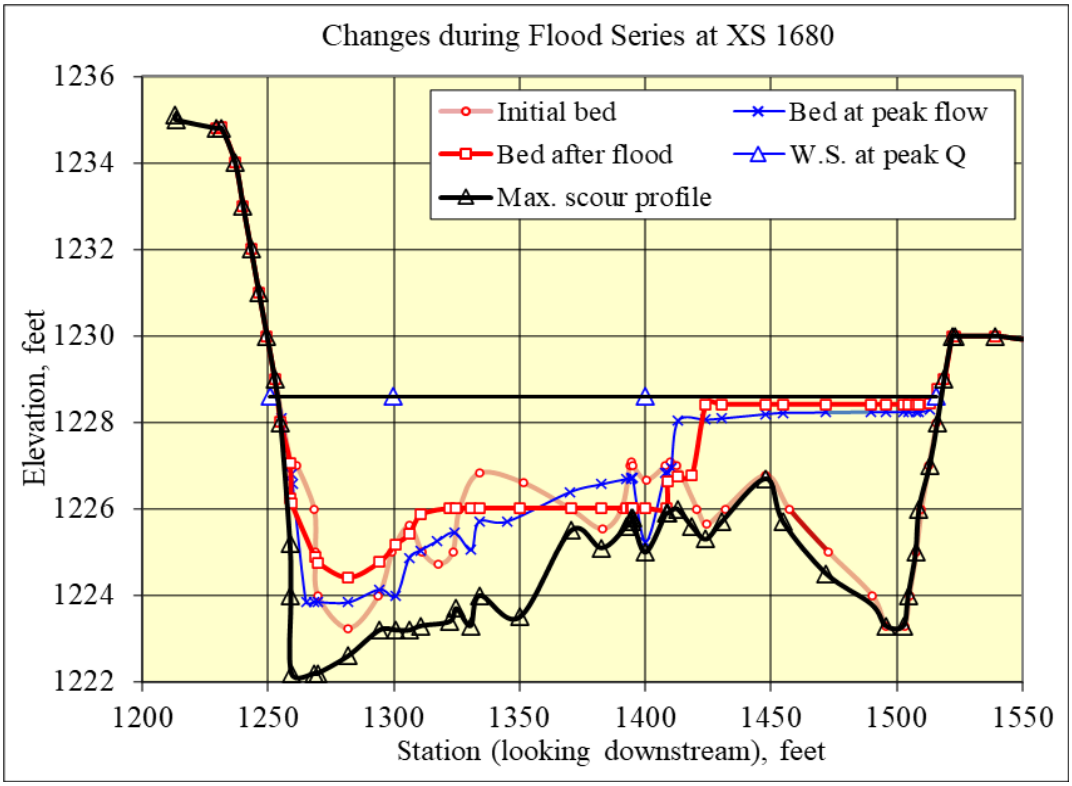

Figure 7. Channel Changes at Cross-section 1680

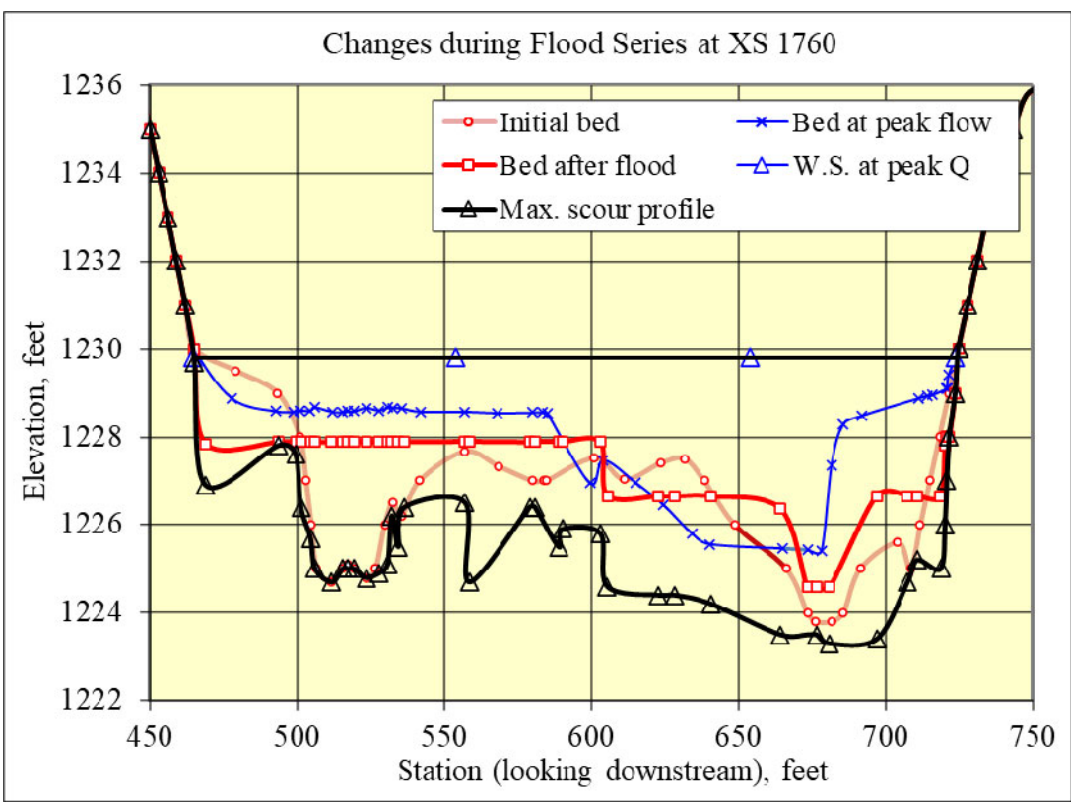

Figure 8. Channel Changes at Cross-section 1760

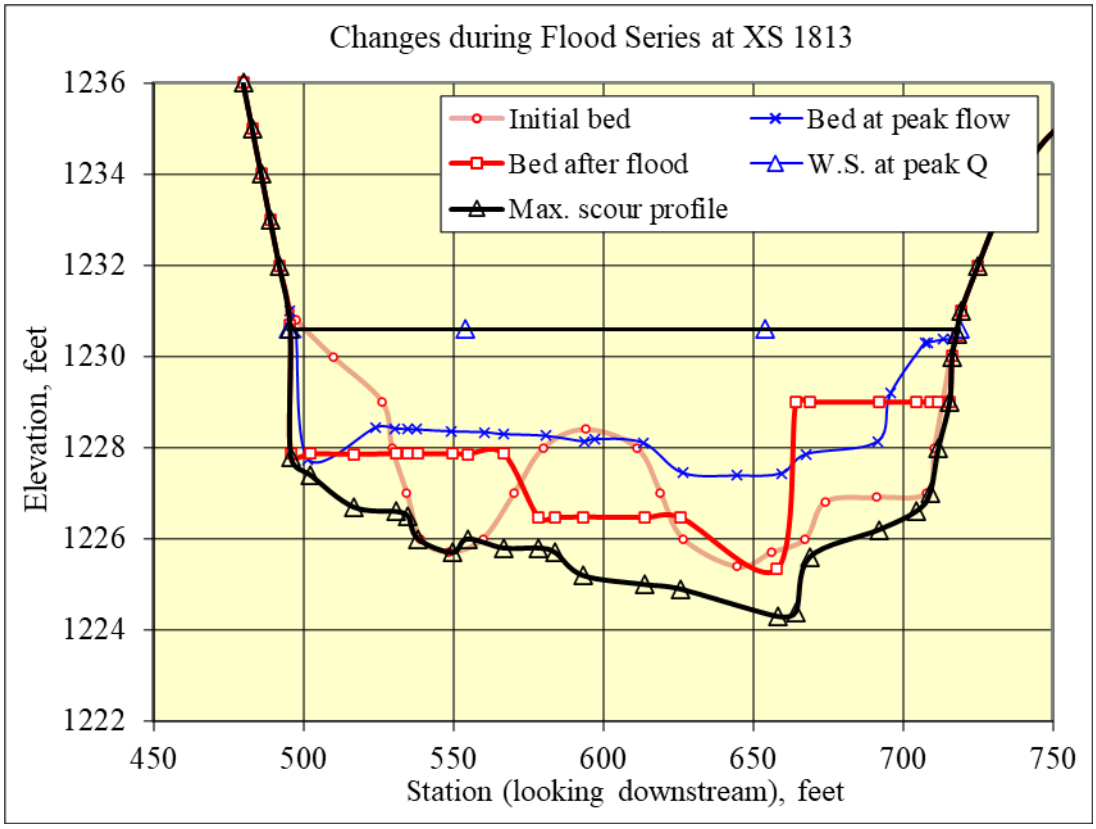

Figure 9. Channel Changes at Cross-section 1813

National Flood Hazard Layer FIRMette

FEMA

118°32'21"W 34°23'45"N

118°31'44"W 34°23'15"N

0 250 500 1,000 1,500 2,000 Feet

1:6,000

Basemap: USGS National Map: Orthoimagery: Data refreshed October, 2020

Legend

SEE FIS REPORT FOR DETAILED LEGEND AND INDEX MAP FOR FIRM PANEL LAYOUT

SPECIAL FLOOD HAZARD AREAS
- Without Base Flood Elevation (BFE) *Zone A, V, A99*
- With BFE or Depth *Zone AE, AO, AH, VE, AR*
- Regulatory Floodway

OTHER AREAS OF FLOOD HAZARD
- 0.2% Annual Chance Flood Hazard, Areas of 1% annual chance flood with average depth less than one foot or with drainage areas of less than one square mile *Zone X*
- Future Conditions 1% Annual Chance Flood Hazard *Zone X*
- Area with Reduced Flood Risk due to Levee. See Notes. *Zone X*
- Area with Flood Risk due to Levee *Zone D*

OTHER AREAS
- NO SCREEN Area of Minimal Flood Hazard *Zone X*
- Effective LOMRs
- Area of Undetermined Flood Hazard *Zone D*

GENERAL STRUCTURES
- Channel, Culvert, or Storm Sewer
- Levee, Dike, or Floodwall

OTHER FEATURES
- 20.2 / 17.5 Cross Sections with 1% Annual Chance Water Surface Elevation
- Coastal Transect
- Base Flood Elevation Line (BFE)
- Limit of Study
- Jurisdiction Boundary
- Coastal Transect Baseline
- Profile Baseline
- Hydrographic Feature

MAP PANELS
- Digital Data Available
- No Digital Data Available
- Unmapped

The pin displayed on the map is an approximate point selected by the user and does not represent an authoritative property location.

This map complies with FEMA's standards for the use of digital flood maps if it is not void as described below. The basemap shown complies with FEMA's basemap accuracy standards

The flood hazard information is derived directly from the authoritative NFHL web services provided by FEMA. This map was exported on 12/12/2021 at 11:00 PM and does not reflect changes or amendments subsequent to this date and time. The NFHL and effective information may change or become superseded by new data over time.

This map image is void if the one or more of the following map elements do not appear: basemap imagery, flood zone labels, legend, scale bar, map creation date, community identifiers, FIRM panel number, and FIRM effective date. Map images for unmapped and unmodernized areas cannot be used for regulatory purposes.

APPENDIX A

HEC-RAS ANALYSES

Existing Conditions

HEC-RAS Plan: Exist Cond River: Placerita Reach: Placerita Profile: 100-year

Reach	River Sta	Profile	Q Total	Min Ch El	W.S. Elev	Crit W.S.	E.G. Elev	E.G. Slope	Vel Chnl	Flow Area	Top Width	Froude # Chl
			(cfs)	(ft)	(ft)	(ft)	(ft)	(ft/ft)	(ft/s)	(sq ft)	(ft)	
Placerita	5474	100-year	4106.00	1270.08	1278.67	1278.67	1280.07	0.006994	10.36	878.96	421.54	0.72
Placerita	4974	100-year	4106.00	1263.95	1269.15	1269.15	1271.12	0.015101	11.26	369.20	150.96	0.99
Placerita	4579	100-year	4106.00	1259.74	1264.35	1264.07	1265.60	0.011459	8.97	491.74	213.42	0.86
Placerita	4334	100-year	4106.00	1257.11	1261.56	1261.39	1262.33	0.014303	7.07	598.98	312.99	0.88
Placerita	4158	100-year	4106.00	1255.04	1258.76	1258.67	1259.53	0.017740	7.06	589.83	344.89	0.95
Placerita	4001	100-year	4106.00	1253.36	1258.28	1256.62	1258.56	0.002448	4.30	959.39	272.79	0.40
Placerita	3922	100-year	4106.00	1252.49	1257.94	1256.09	1258.35	0.002681	5.23	913.74	227.86	0.43
Placerita	3845	100-year	4106.00	1251.50	1256.05	1256.05	1257.81	0.014841	10.69	404.41	127.36	0.99
Placerita	3814	100-year	4106.00	1245.47	1255.83	1251.59	1256.56	0.001913	6.86	615.52	73.48	0.40
Placerita	3800		Bridge									
Placerita	3785	100-year	4106.00	1244.54	1255.07	1251.58	1256.03	0.003059	7.87	530.60	68.12	0.47
Placerita	3706	100-year	4106.00	1243.67	1252.43	1251.99	1255.10	0.011276	13.11	315.66	51.75	0.90
Placerita	3361	100-year	4106.00	1240.32	1248.52	1248.23	1251.06	0.011908	12.83	333.05	66.36	0.91
Placerita	2960	100-year	4106.00	1237.01	1243.91	1243.91	1246.07	0.012448	11.89	361.68	90.96	0.94
Placerita	2634	100-year	4106.00	1233.07	1241.63	1240.37	1242.87	0.005826	9.10	480.10	96.72	0.65
Placerita	2243	100-year	4106.00	1230.84	1237.28	1237.28	1239.59	0.012047	12.41	353.70	82.52	0.93
Placerita	1941	100-year	4106.00	1227.80	1233.36	1233.36	1234.85	0.015058	9.90	431.21	148.79	0.97
Placerita	1813	100-year	4106.00	1225.39	1229.29	1229.29	1230.51	0.017073	8.86	464.16	208.58	0.99
Placerita	1760	100-year	4106.00	1223.80	1228.84	1228.32	1229.51	0.008955	6.55	627.06	260.51	0.72
Placerita	1680	100-year	4106.00	1223.24	1227.69	1227.56	1228.57	0.015180	7.55	546.60	287.71	0.91
Placerita	1413	100-year	4106.00	1220.80	1224.63	1224.25	1225.41	0.009332	7.23	612.75	301.94	0.75
Placerita	1165	100-year	4106.00	1218.10	1221.19	1221.19	1222.21	0.018627	8.16	518.00	296.12	1.00
Placerita	930	100-year	4106.00	1215.00	1219.57	1218.16	1219.91	0.003147	4.65	882.94	446.74	0.45
Placerita	818	100-year	4106.00	1213.49	1219.46	1217.07	1219.65	0.001262	3.59	1222.43	644.23	0.30
Placerita	611	100-year	4106.00	1210.81	1219.44	1215.05	1219.51	0.000291	2.05	2055.50	924.10	0.15
Placerita	424	100-year	4106.00	1208.80	1219.35	1213.02	1219.45	0.000273	2.65	1902.77	1197.33	0.16
Placerita	398	100-year	4106.00	1208.93	1219.17	1214.07	1219.40	0.000695	4.15	1418.61	1239.17	0.24
Placerita	377		Bridge									
Placerita	352	100-year	4106.00	1208.36	1214.52	1213.71	1215.91	0.008019	9.50	440.88	828.39	0.75
Placerita	339	100-year	4106.00	1208.38	1214.61	1213.27	1215.65	0.005517	8.19	507.58	896.17	0.63
Placerita	279		Bridge									
Placerita	218	100-year	4106.00	1207.01	1212.05	1211.93	1213.82	0.013055	10.68	389.36	686.19	0.94
Placerita	137	100-year	4106.00	1205.97	1211.08	1210.89	1212.68	0.013014	10.15	405.58	692.58	0.92

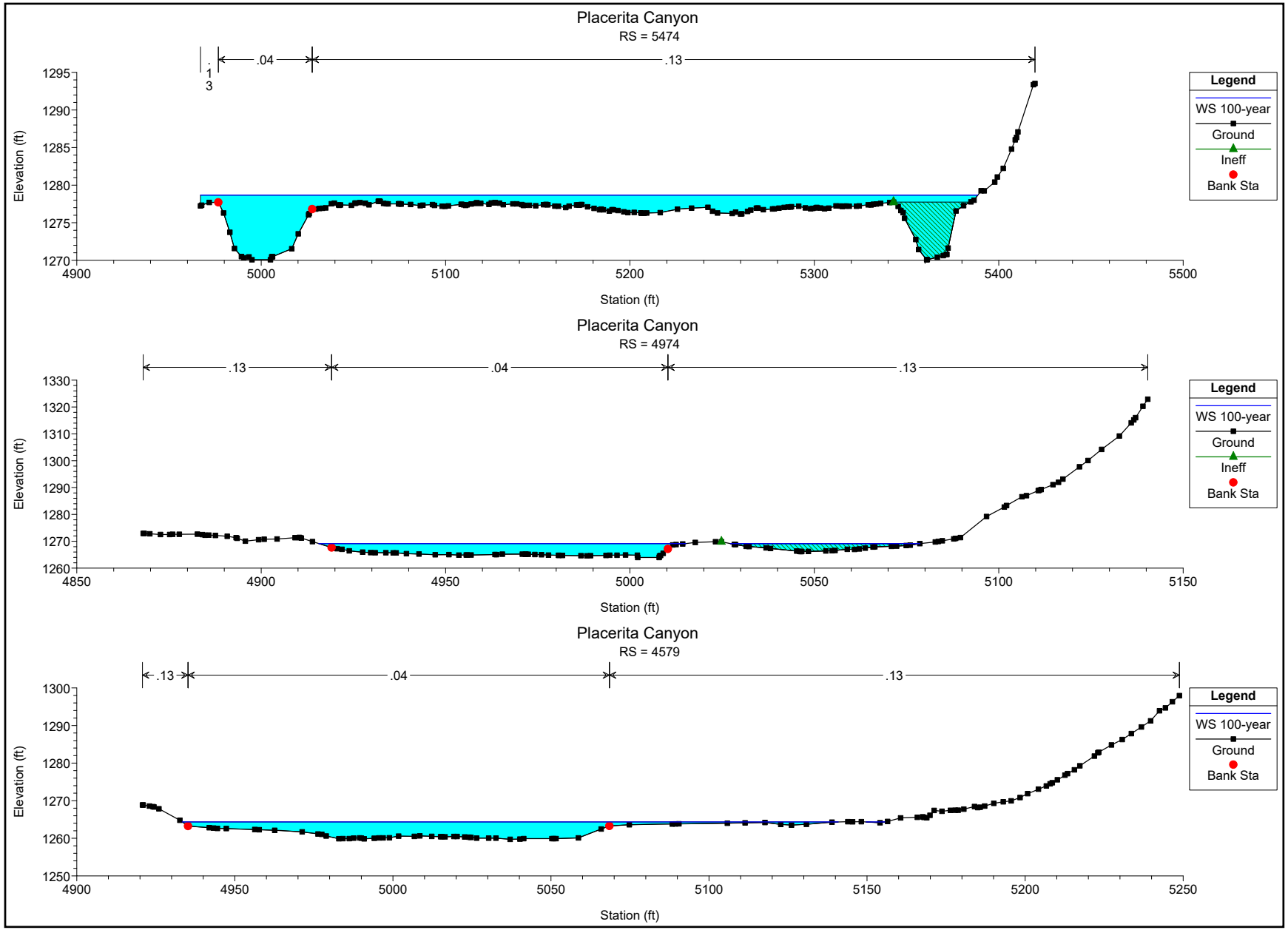
Placerita Canyon
RS = 5474
.04
.13
Elevation (ft)
Station (ft)
Legend
WS 100-year
Ground
Ineff
Bank Sta
Placerita Canyon
RS = 4974
.13
.04
.13
Elevation (ft)
Station (ft)
Legend
WS 100-year
Ground
Ineff
Bank Sta
Placerita Canyon
RS = 4579
.13
.04
.13
Elevation (ft)
Station (ft)
Legend
WS 100-year
Ground
Bank Sta

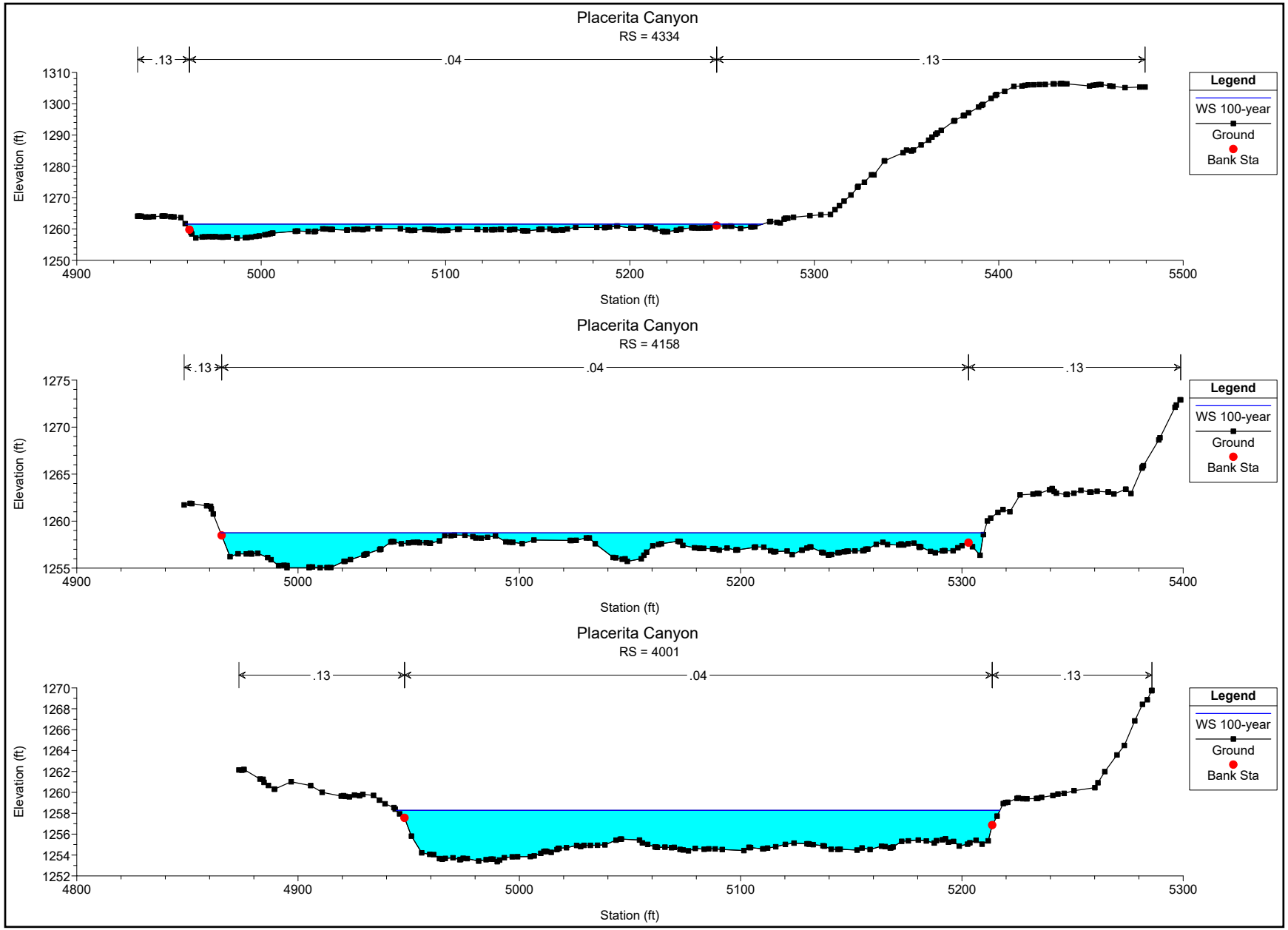
Placerita Canyon
RS = 4334
.13
.04
.13
Elevation (ft)
Station (ft)
Legend
WS 100-year
Ground
Bank Sta
Placerita Canyon
RS = 4158
.13
.04
.13
Elevation (ft)
Station (ft)
Legend
WS 100-year
Ground
Bank Sta
Placerita Canyon
RS = 4001
.13
.04
.13
Elevation (ft)
Station (ft)
Legend
WS 100-year
Ground
Bank Sta

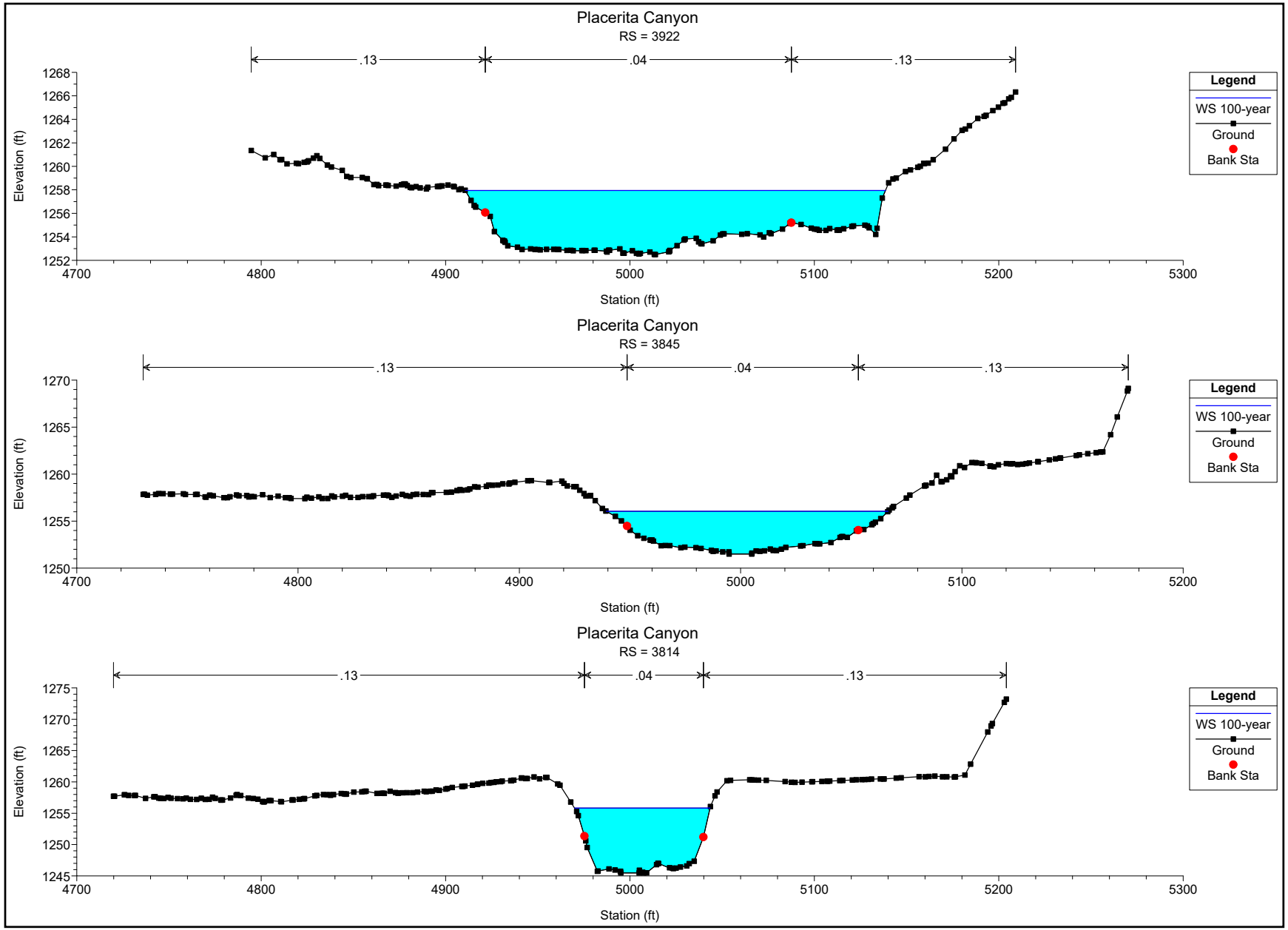
Placerita Canyon
RS = 3922
.13
.04
.13
Elevation (ft)
Station (ft)
Legend
WS 100-year
Ground
Bank Sta
Placerita Canyon
RS = 3845
.13
.04
.13
Elevation (ft)
Station (ft)
Legend
WS 100-year
Ground
Bank Sta
Placerita Canyon
RS = 3814
.13
.04
.13
Elevation (ft)
Station (ft)
Legend
WS 100-year
Ground
Bank Sta

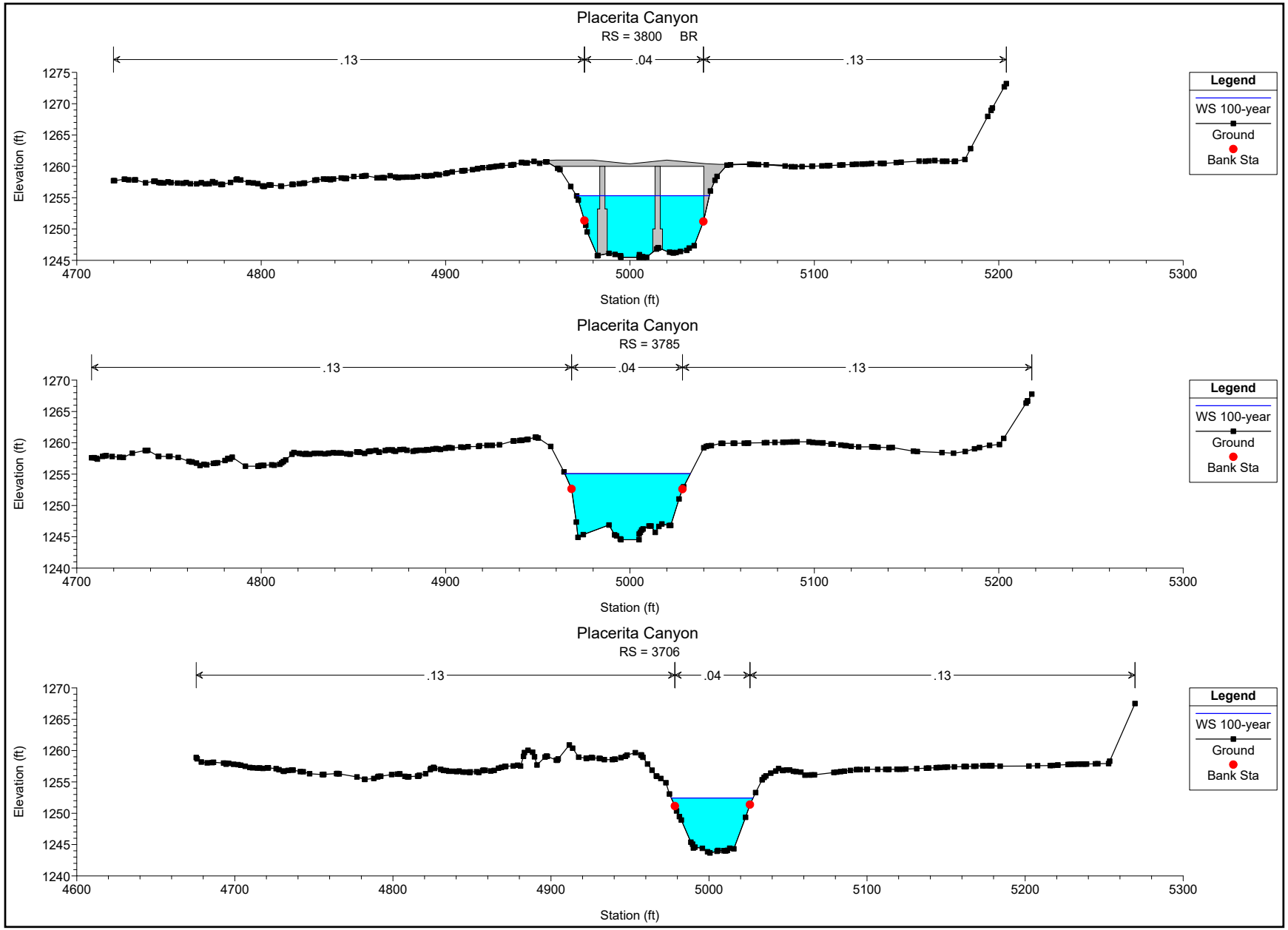
Placerita Canyon
RS = 3800 BR
.13
.04
.13
Elevation (ft)
Station (ft)
Legend
WS 100-year
Ground
Bank Sta
Placerita Canyon
RS = 3785
.13
.04
.13
Elevation (ft)
Station (ft)
Legend
WS 100-year
Ground
Bank Sta
Placerita Canyon
RS = 3706
.13
.04
.13
Elevation (ft)
Station (ft)
Legend
WS 100-year
Ground
Bank Sta

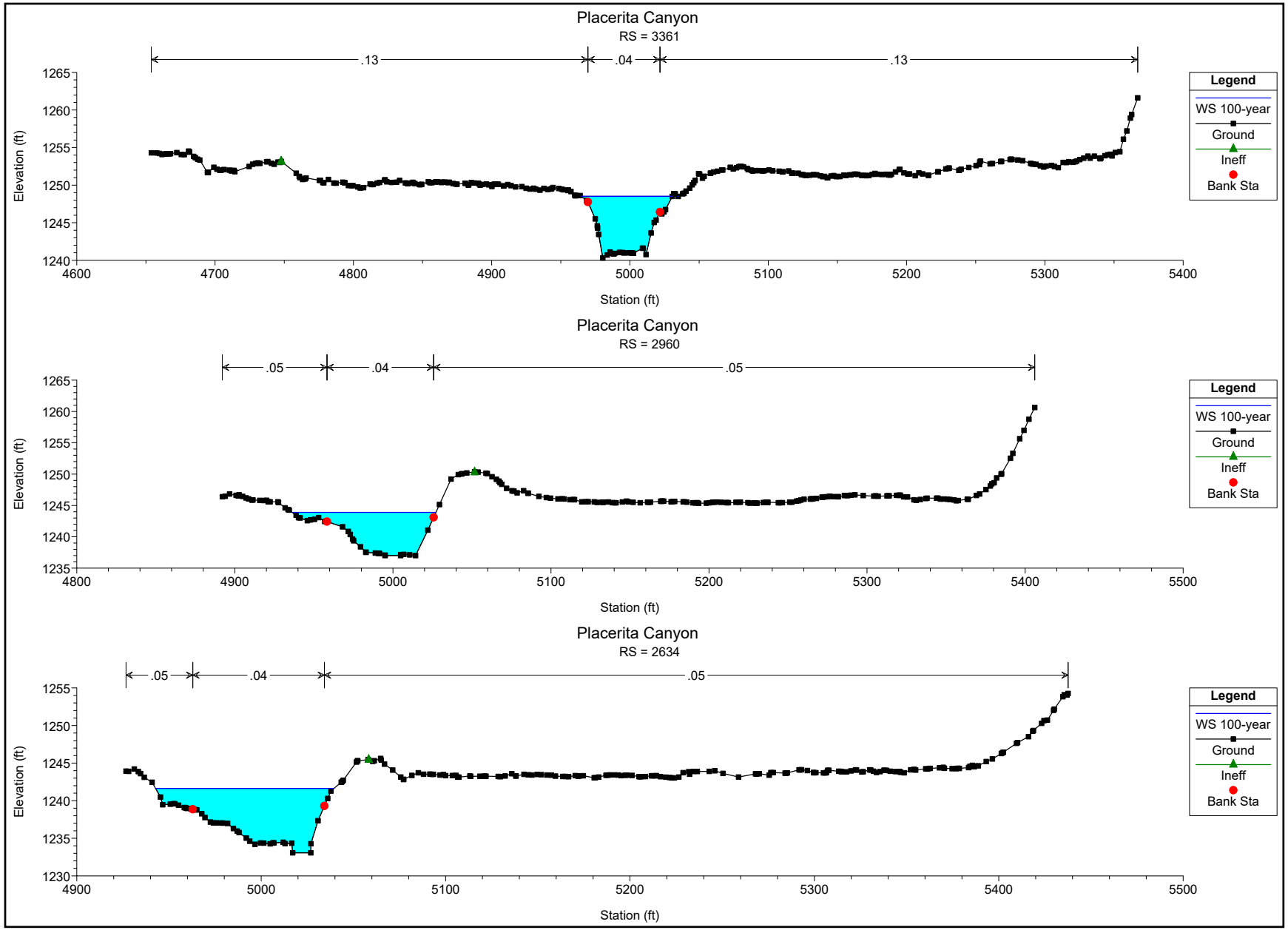
Placerita Canyon
RS = 3361
.13
.04
.13
Elevation (ft)
Station (ft)
Legend
WS 100-year
Ground
Ineff
Bank Sta
Placerita Canyon
RS = 2960
.05
.04
.05
Elevation (ft)
Station (ft)
Legend
WS 100-year
Ground
Ineff
Bank Sta
Placerita Canyon
RS = 2634
.05
.04
.05
Elevation (ft)
Station (ft)
Legend
WS 100-year
Ground
Ineff
Bank Sta

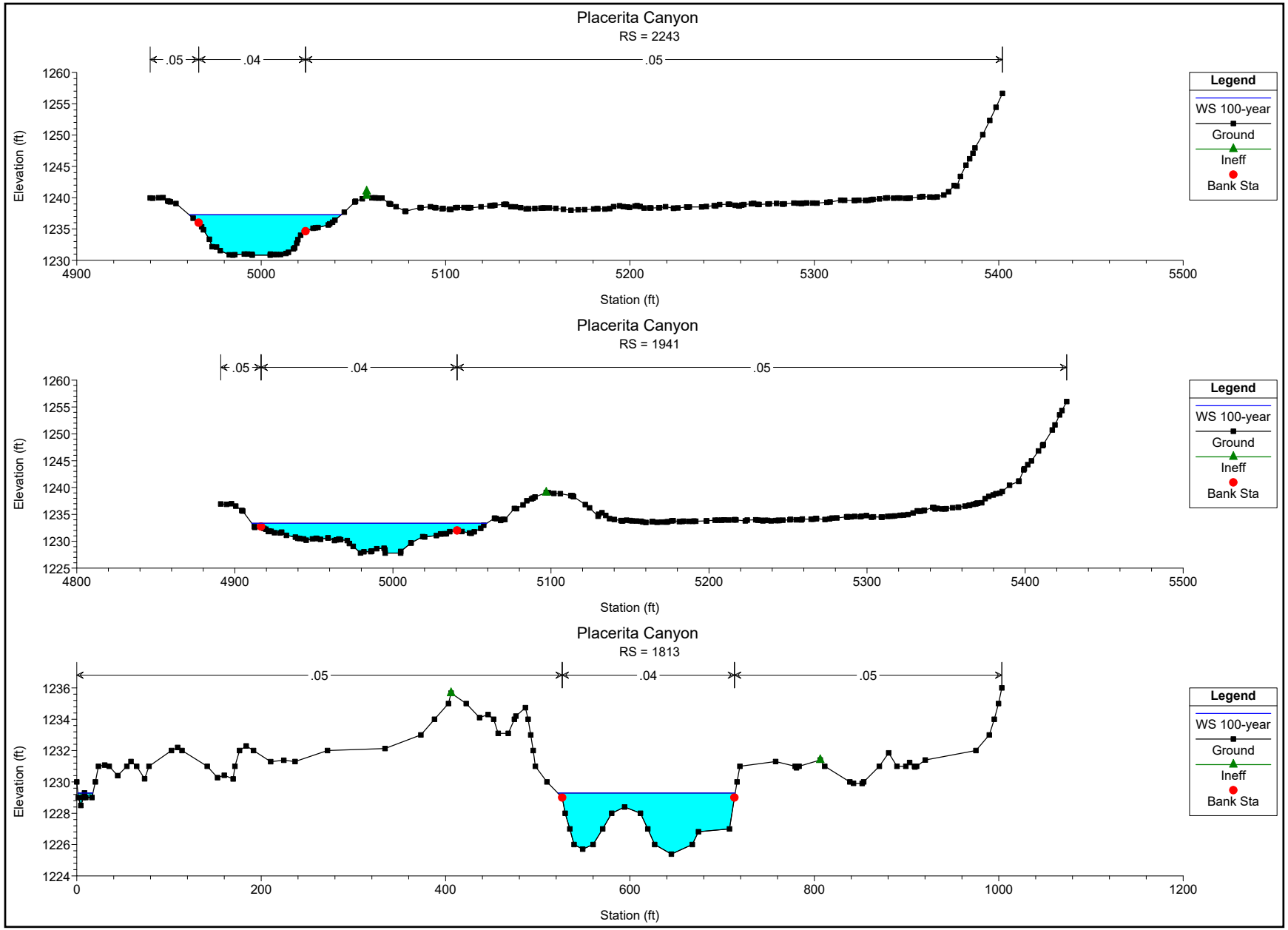
Placerita Canyon
RS = 2243
.05
.04
.05
Elevation (ft)
Station (ft)
Legend
WS 100-year
Ground
Ineff
Bank Sta
Placerita Canyon
RS = 1941
.05
.04
.05
Elevation (ft)
Station (ft)
Legend
WS 100-year
Ground
Ineff
Bank Sta
Placerita Canyon
RS = 1813
.05
.04
.05
Elevation (ft)
Station (ft)
Legend
WS 100-year
Ground
Ineff
Bank Sta

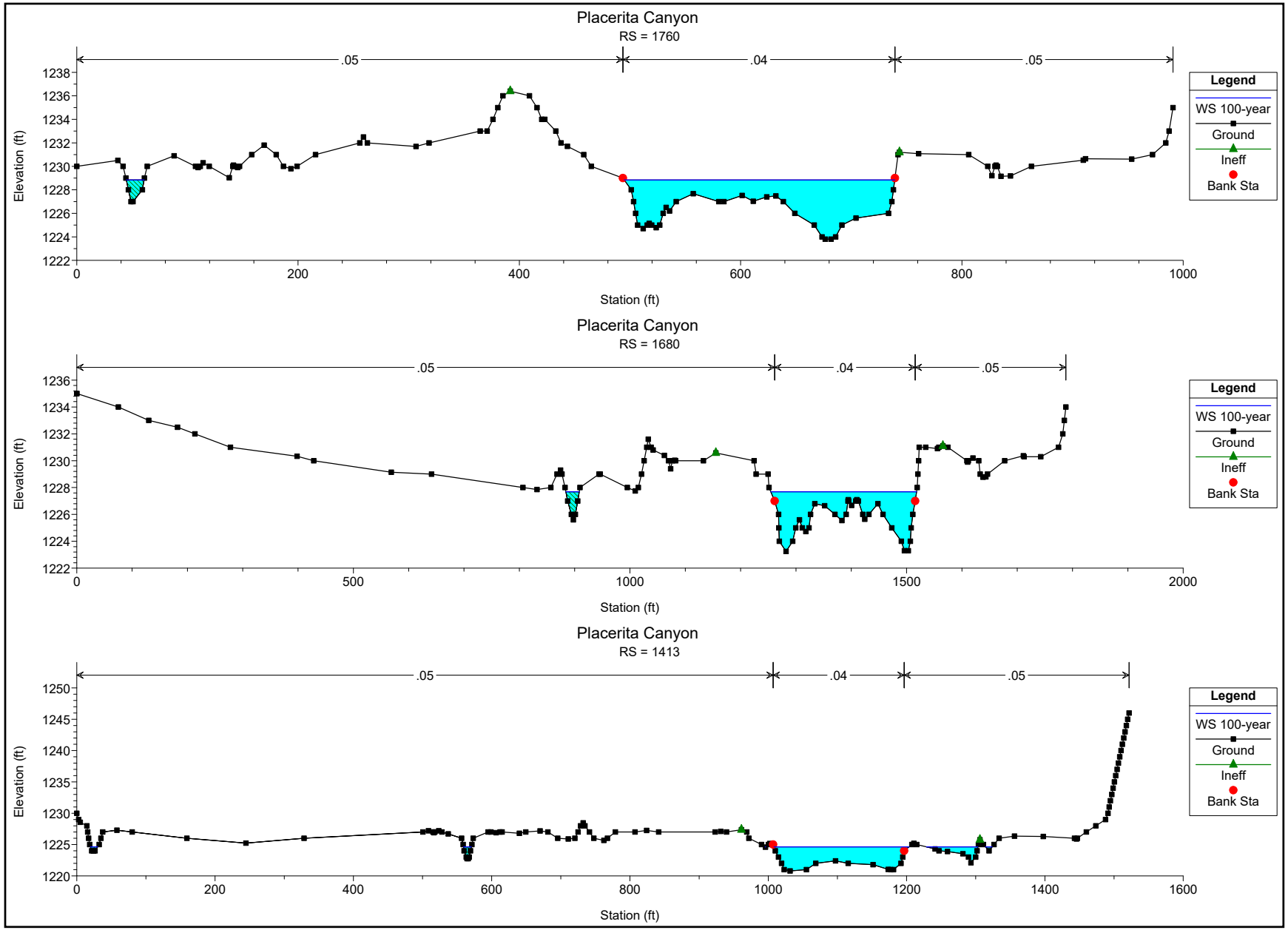
Placerita Canyon
RS = 1760
.05
.04
.05
Elevation (ft)
Station (ft)
Legend
WS 100-year
Ground
Ineff
Bank Sta
Placerita Canyon
RS = 1680
.05
.04
.05
Elevation (ft)
Station (ft)
Legend
WS 100-year
Ground
Ineff
Bank Sta
Placerita Canyon
RS = 1413
.05
.04
.05
Elevation (ft)
Station (ft)
Legend
WS 100-year
Ground
Ineff
Bank Sta

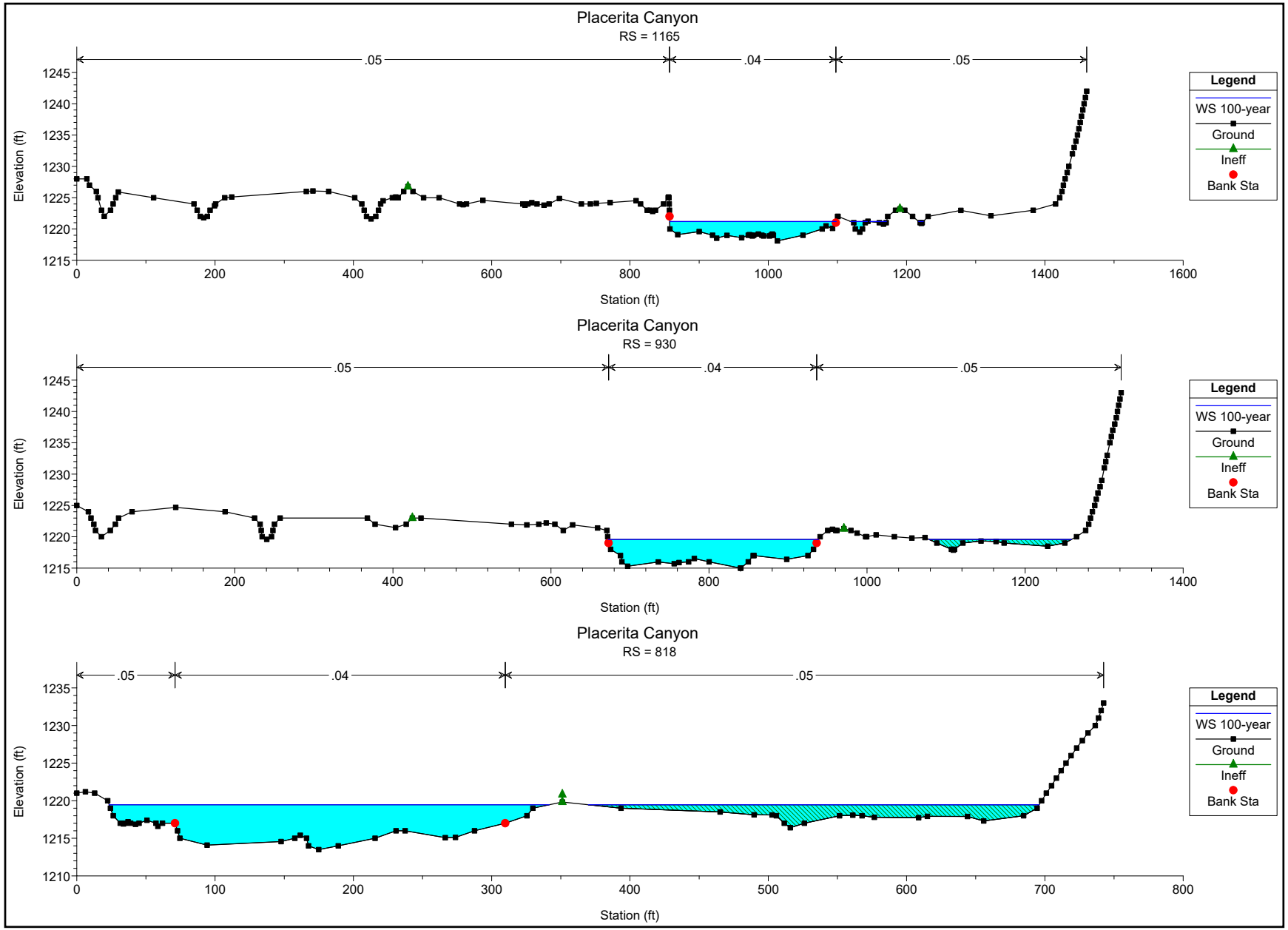
Placerita Canyon
RS = 1165
.05
.04
.05
Elevation (ft)
Station (ft)
Legend
WS 100-year
Ground
Ineff
Bank Sta
Placerita Canyon
RS = 930
.05
.04
.05
Elevation (ft)
Station (ft)
Legend
WS 100-year
Ground
Ineff
Bank Sta
Placerita Canyon
RS = 818
.05
.04
.05
Elevation (ft)
Station (ft)
Legend
WS 100-year
Ground
Ineff
Bank Sta

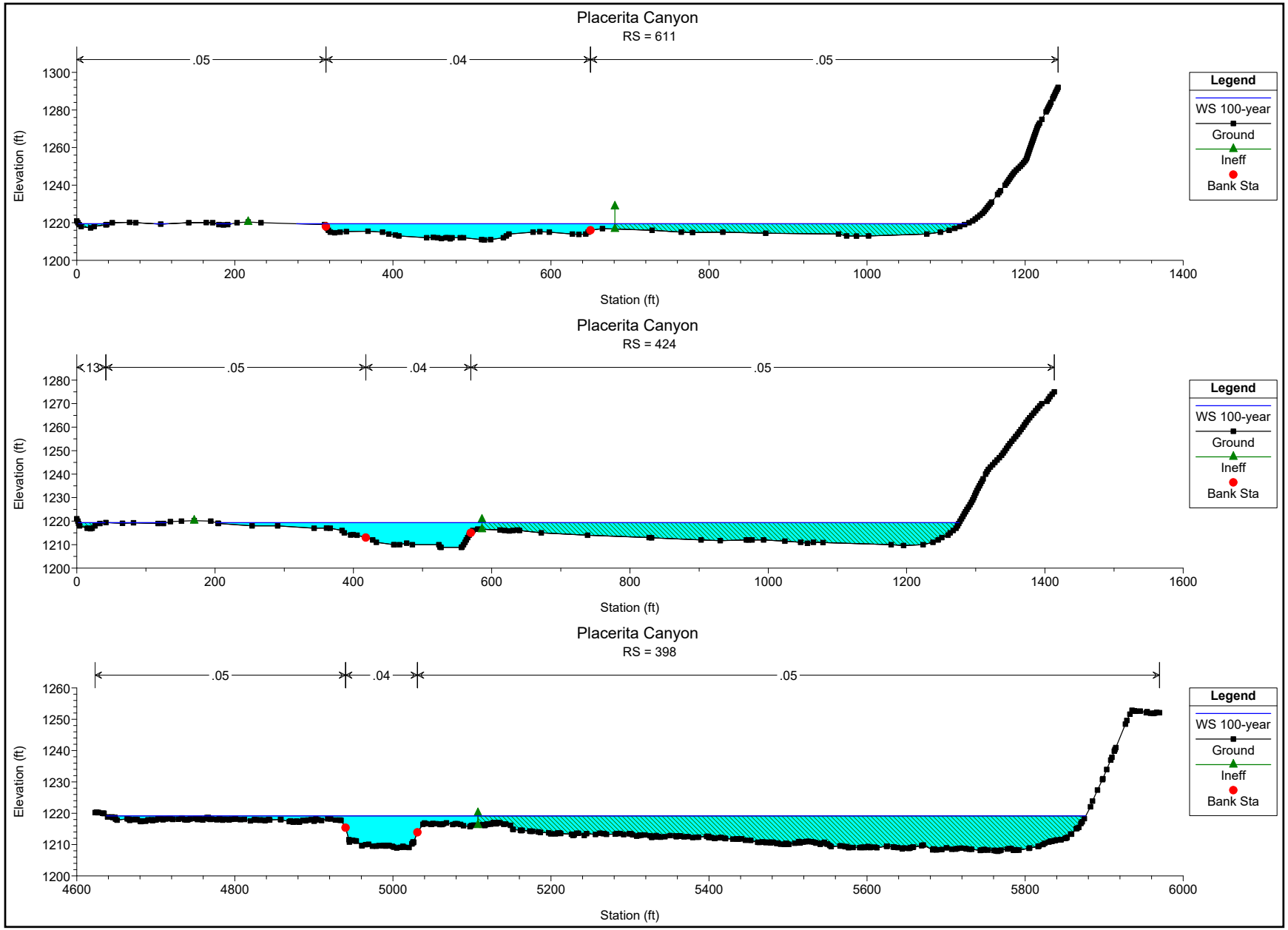
Placerita Canyon
RS = 611
.05
.04
.05
Elevation (ft)
Station (ft)
Legend
WS 100-year
Ground
Ineff
Bank Sta
Placerita Canyon
RS = 424
13
.05
.04
.05
Elevation (ft)
Station (ft)
Legend
WS 100-year
Ground
Ineff
Bank Sta
Placerita Canyon
RS = 398
.05
.04
.05
Elevation (ft)
Station (ft)
Legend
WS 100-year
Ground
Ineff
Bank Sta

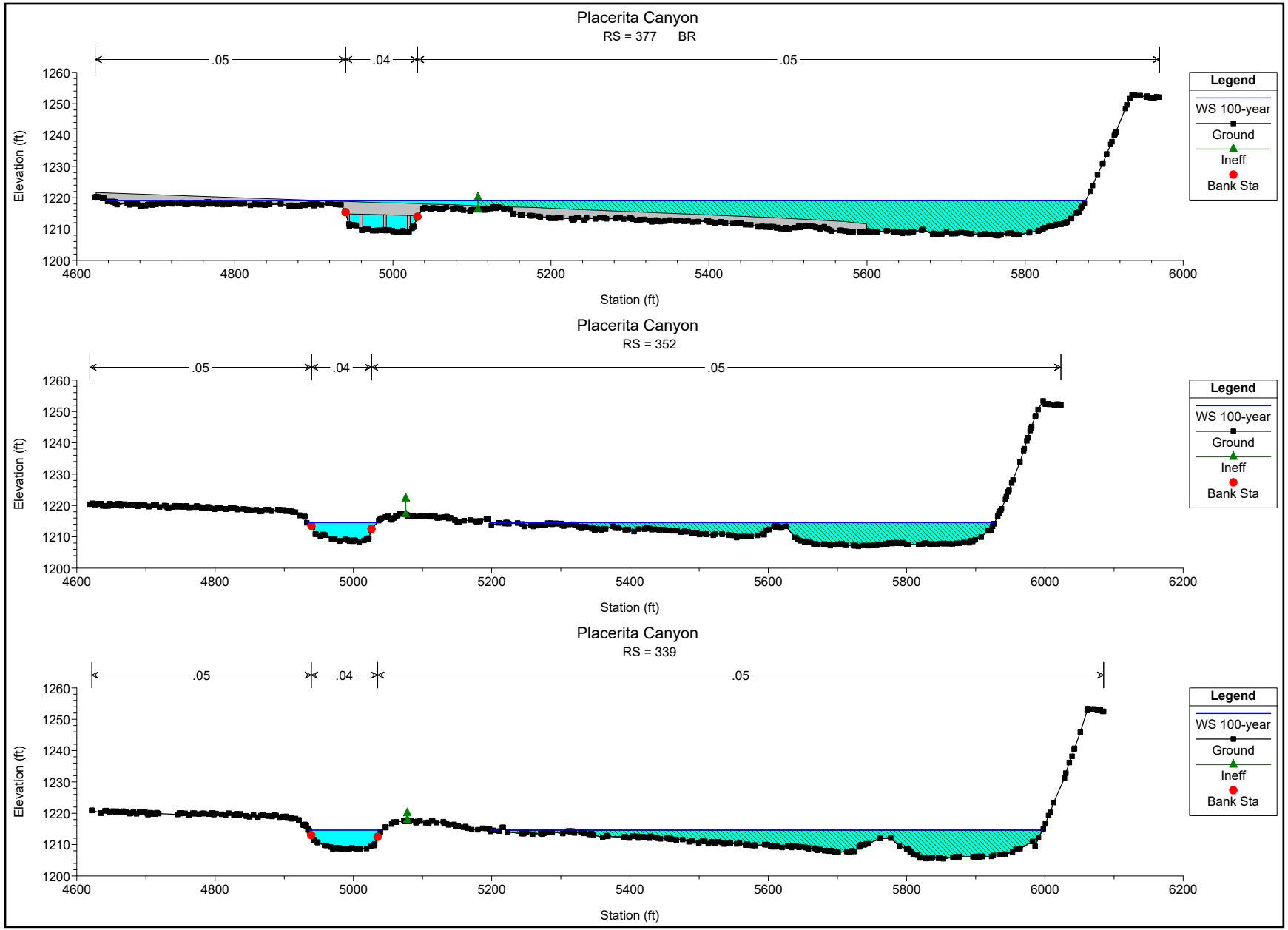
Placerita Canyon
RS = 377 BR
.05
.04
.05
Elevation (ft)
Station (ft)
Legend
WS 100-year
Ground
Ineff
Bank Sta
Placerita Canyon
RS = 352
.05
.04
.05
Elevation (ft)
Station (ft)
Legend
WS 100-year
Ground
Ineff
Bank Sta
Placerita Canyon
RS = 339
.05
.04
.05
Elevation (ft)
Station (ft)
Legend
WS 100-year
Ground
Ineff
Bank Sta

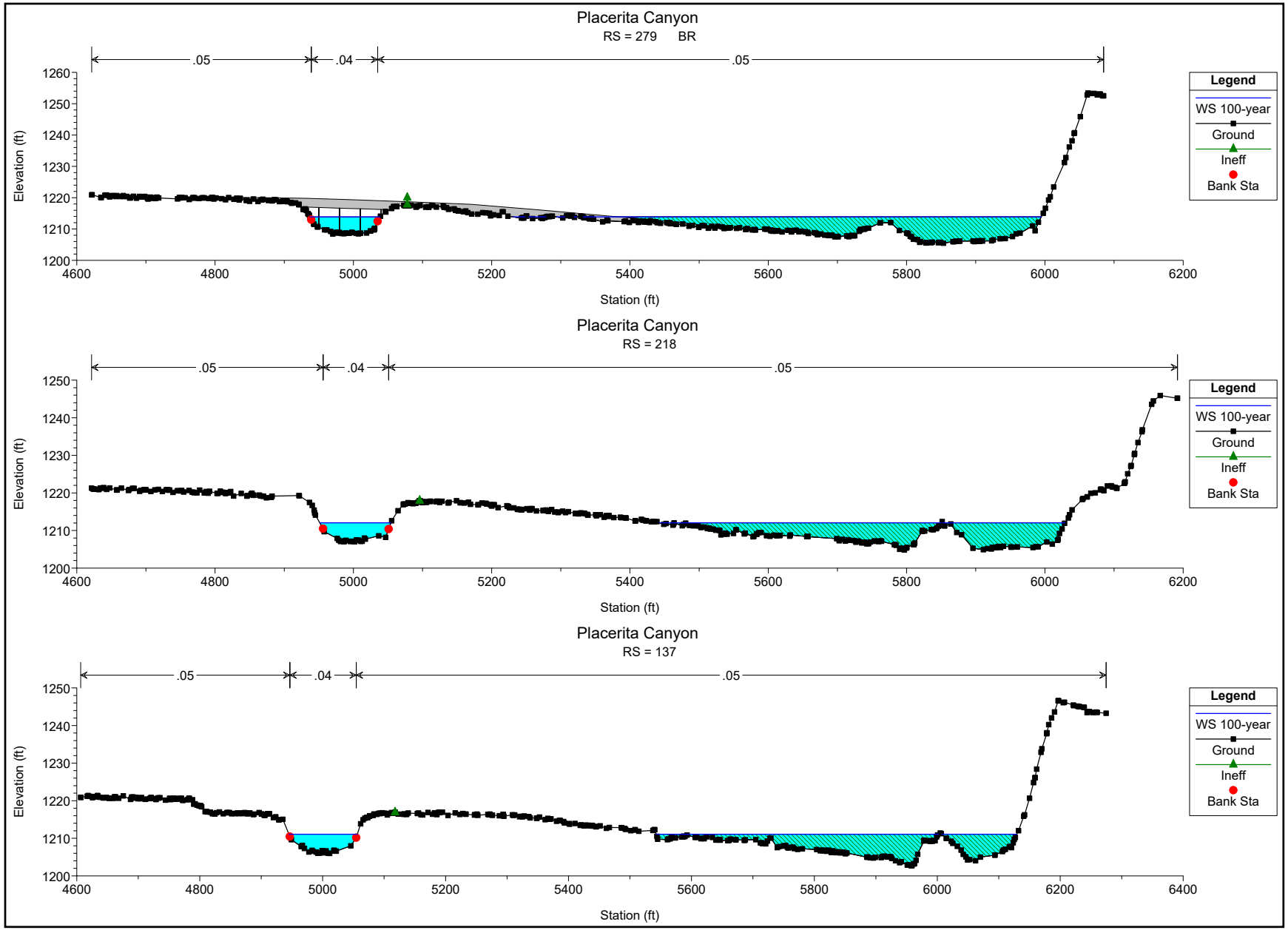
Placerita Canyon
RS = 279 BR
.05
.04
.05
Elevation (ft)
Station (ft)
Legend
WS 100-year
Ground
Ineff
Bank Sta
Placerita Canyon
RS = 218
.05
.04
.05
Elevation (ft)
Station (ft)
Legend
WS 100-year
Ground
Ineff
Bank Sta
Placerita Canyon
RS = 137
.05
.04
.05
Elevation (ft)
Station (ft)
Legend
WS 100-year
Ground
Ineff
Bank Sta

Proposed Conditions

HEC-RAS Plan: Prop Cond River: Placerita Reach: Placerita Profile: 100-year

Reach	River Sta	Profile	Q Total	Min Ch El	W.S. Elev	Crit W.S.	E.G. Elev	E.G. Slope	Vel Chnl	Flow Area	Top Width	Froude # Chl
			(cfs)	(ft)	(ft)	(ft)	(ft)	(ft/ft)	(ft/s)	(sq ft)	(ft)	
Placerita	5474	100-year	4106.00	1270.08	1278.67	1278.67	1280.07	0.006994	10.36	878.96	421.54	0.72
Placerita	4974	100-year	4106.00	1263.95	1269.15	1269.15	1271.12	0.015101	11.26	369.20	150.96	0.99
Placerita	4579	100-year	4106.00	1259.74	1264.35	1264.07	1265.60	0.011459	8.97	491.74	213.42	0.86
Placerita	4334	100-year	4106.00	1257.11	1261.56	1261.39	1262.33	0.014303	7.07	598.98	312.99	0.88
Placerita	4158	100-year	4106.00	1255.04	1258.76	1258.67	1259.53	0.017740	7.06	589.83	344.89	0.95
Placerita	4001	100-year	4106.00	1253.36	1258.28	1256.62	1258.56	0.002448	4.30	959.39	272.79	0.40
Placerita	3922	100-year	4106.00	1252.49	1257.94	1256.09	1258.35	0.002681	5.23	913.74	227.86	0.43
Placerita	3845	100-year	4106.00	1251.50	1256.05	1256.05	1257.81	0.014841	10.69	404.41	127.36	0.99
Placerita	3814	100-year	4106.00	1245.47	1255.83	1251.59	1256.56	0.001913	6.86	615.52	73.48	0.40
Placerita	3800		Bridge									
Placerita	3785	100-year	4106.00	1244.54	1255.07	1251.58	1256.03	0.003059	7.87	530.60	68.12	0.47
Placerita	3706	100-year	4106.00	1243.67	1252.43	1251.99	1255.10	0.011276	13.11	315.66	51.75	0.90
Placerita	3361	100-year	4106.00	1240.32	1248.52	1248.23	1251.06	0.011908	12.83	333.05	66.36	0.91
Placerita	2960	100-year	4106.00	1237.01	1243.91	1243.91	1246.07	0.012448	11.89	361.68	90.96	0.94
Placerita	2634	100-year	4106.00	1233.07	1241.63	1240.37	1242.87	0.005826	9.10	480.10	96.72	0.65
Placerita	2243	100-year	4106.00	1230.84	1237.28	1237.28	1239.59	0.012047	12.41	353.70	82.52	0.93
Placerita	1941	100-year	4106.00	1227.80	1233.36	1233.36	1234.85	0.015058	9.90	431.21	148.79	0.97
Placerita	1813	100-year	4106.00	1225.39	1230.08	1229.28	1230.77	0.006734	6.69	622.16	207.58	0.65
Placerita	1786.5		Bridge									
Placerita	1760	100-year	4106.00	1223.80	1228.84	1228.48	1229.66	0.011214	7.22	568.45	226.41	0.80
Placerita	1680	100-year	4106.00	1223.24	1227.68	1227.57	1228.59	0.015764	7.66	537.86	257.87	0.93
Placerita	1413	100-year	4106.00	1220.80	1224.66	1224.24	1225.42	0.009034	7.16	619.92	271.89	0.74
Placerita	1165	100-year	4106.00	1218.10	1221.17	1221.17	1222.22	0.019517	8.28	509.86	286.20	1.03
Placerita	930	100-year	4106.00	1215.00	1219.58	1218.16	1219.92	0.003120	4.64	885.25	266.54	0.45
Placerita	818	100-year	4106.00	1213.50	1219.47	1217.07	1219.66	0.001277	3.53	1220.10	308.33	0.30
Placerita	611	100-year	4106.00	1210.81	1219.44	1215.07	1219.51	0.000310	2.05	2004.19	360.64	0.15
Placerita	424	100-year	4106.00	1208.80	1219.35	1213.02	1219.45	0.000273	2.65	1869.05	623.30	0.15
Placerita	398	100-year	4106.00	1208.93	1219.17	1214.07	1219.40	0.000695	4.15	1418.61	1239.17	0.24
Placerita	377		Bridge									
Placerita	352	100-year	4106.00	1208.36	1214.52	1213.71	1215.91	0.008019	9.50	440.88	828.39	0.75
Placerita	339	100-year	4106.00	1208.38	1214.61	1213.27	1215.65	0.005517	8.19	507.58	896.17	0.63
Placerita	279		Bridge									
Placerita	218	100-year	4106.00	1207.01	1212.05	1211.93	1213.82	0.013055	10.68	389.36	686.19	0.94
Placerita	137	100-year	4106.00	1205.97	1211.08	1210.89	1212.68	0.013014	10.15	405.58	692.58	0.92

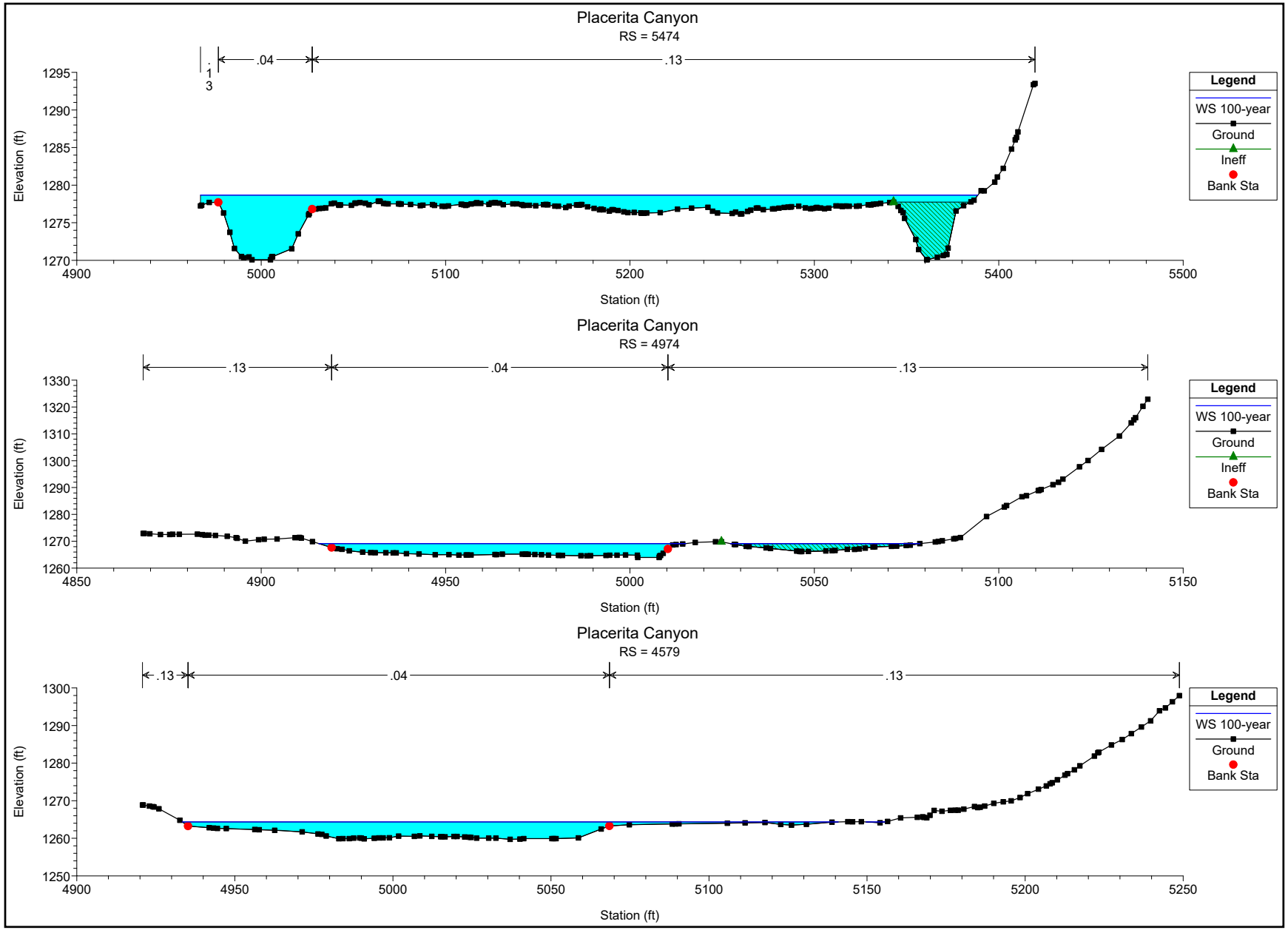
Placerita Canyon
RS = 5474
.04
.13
Elevation (ft)
Station (ft)
Legend
WS 100-year
Ground
Ineff
Bank Sta
Placerita Canyon
RS = 4974
.13
.04
.13
Elevation (ft)
Station (ft)
Legend
WS 100-year
Ground
Ineff
Bank Sta
Placerita Canyon
RS = 4579
.13
.04
.13
Elevation (ft)
Station (ft)
Legend
WS 100-year
Ground
Bank Sta

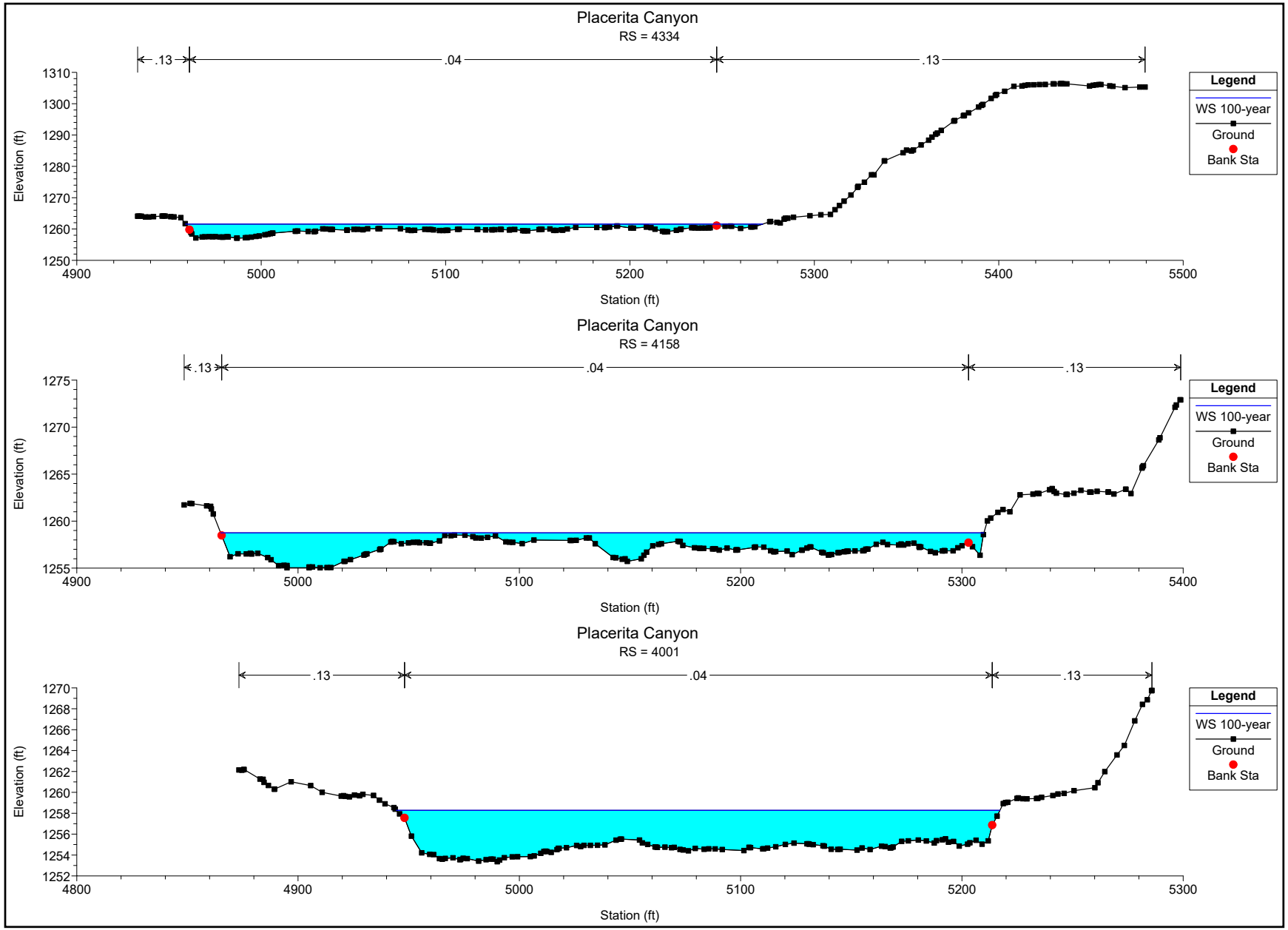
Placerita Canyon
RS = 4334
.13
.04
.13
Elevation (ft)
Station (ft)
Legend
WS 100-year
Ground
Bank Sta
Placerita Canyon
RS = 4158
.13
.04
.13
Elevation (ft)
Station (ft)
Legend
WS 100-year
Ground
Bank Sta
Placerita Canyon
RS = 4001
.13
.04
.13
Elevation (ft)
Station (ft)
Legend
WS 100-year
Ground
Bank Sta

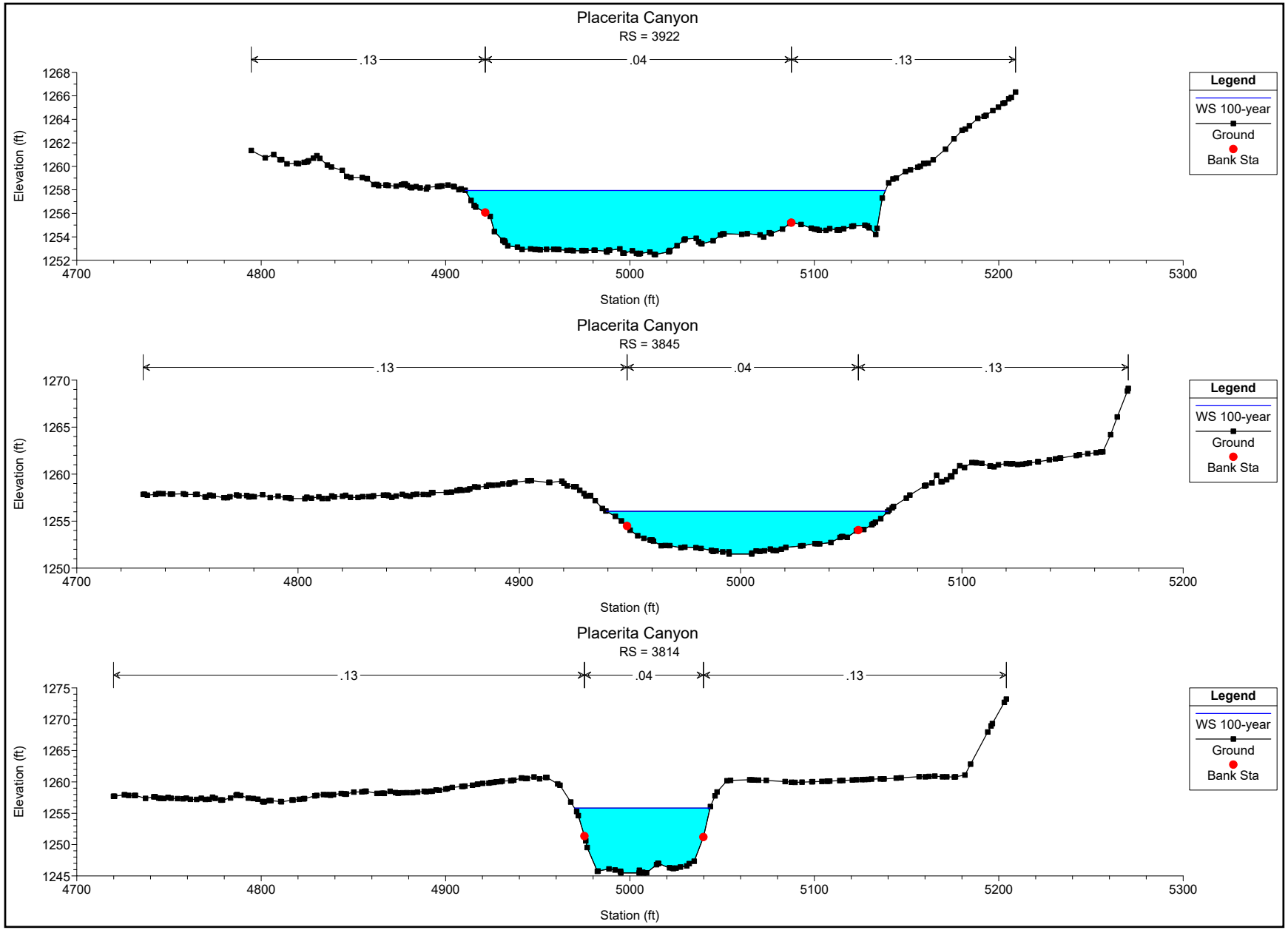
Placerita Canyon
RS = 3922
.13
.04
.13
Elevation (ft)
Station (ft)
Legend
WS 100-year
Ground
Bank Sta
Placerita Canyon
RS = 3845
.13
.04
.13
Elevation (ft)
Station (ft)
Legend
WS 100-year
Ground
Bank Sta
Placerita Canyon
RS = 3814
.13
.04
.13
Elevation (ft)
Station (ft)
Legend
WS 100-year
Ground
Bank Sta

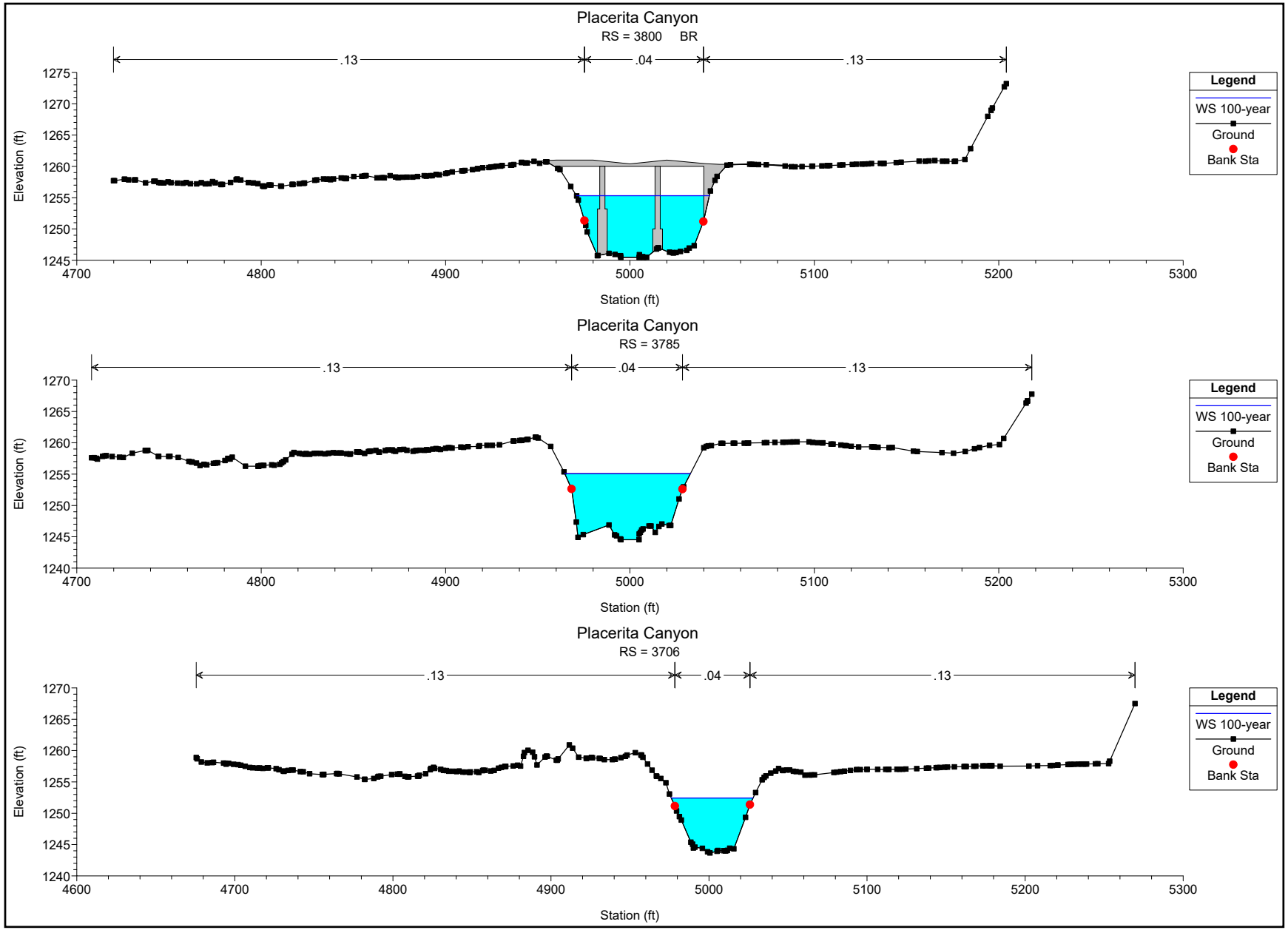
Placerita Canyon
RS = 3800 BR
.13
.04
.13
Elevation (ft)
Station (ft)
Legend
WS 100-year
Ground
Bank Sta
Placerita Canyon
RS = 3785
.13
.04
.13
Elevation (ft)
Station (ft)
Legend
WS 100-year
Ground
Bank Sta
Placerita Canyon
RS = 3706
.13
.04
.13
Elevation (ft)
Station (ft)
Legend
WS 100-year
Ground
Bank Sta

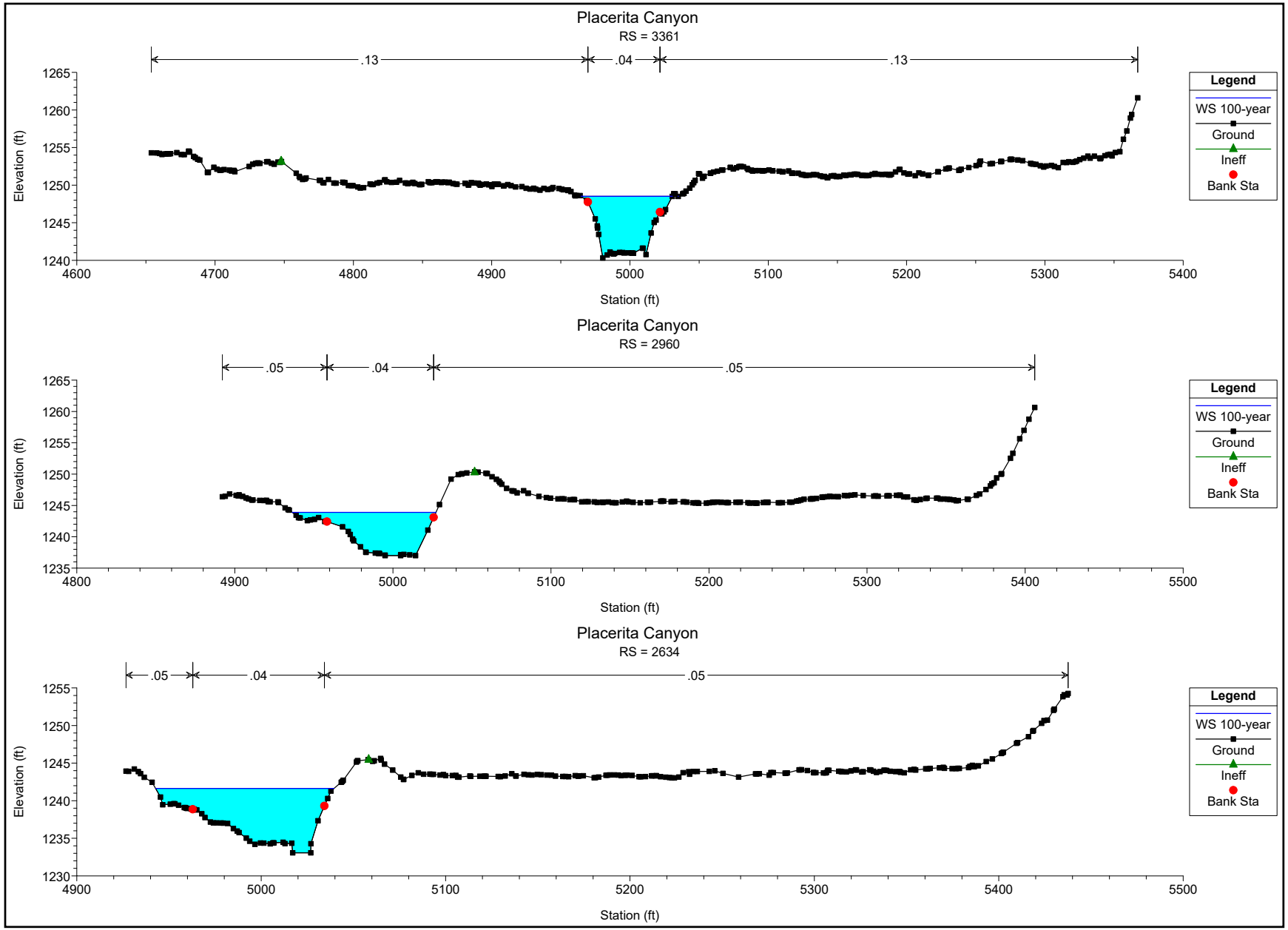
Placerita Canyon
RS = 3361
.13
.04
.13
Elevation (ft)
Station (ft)
Legend
WS 100-year
Ground
Ineff
Bank Sta
Placerita Canyon
RS = 2960
.05
.04
.05
Elevation (ft)
Station (ft)
Legend
WS 100-year
Ground
Ineff
Bank Sta
Placerita Canyon
RS = 2634
.05
.04
.05
Elevation (ft)
Station (ft)
Legend
WS 100-year
Ground
Ineff
Bank Sta

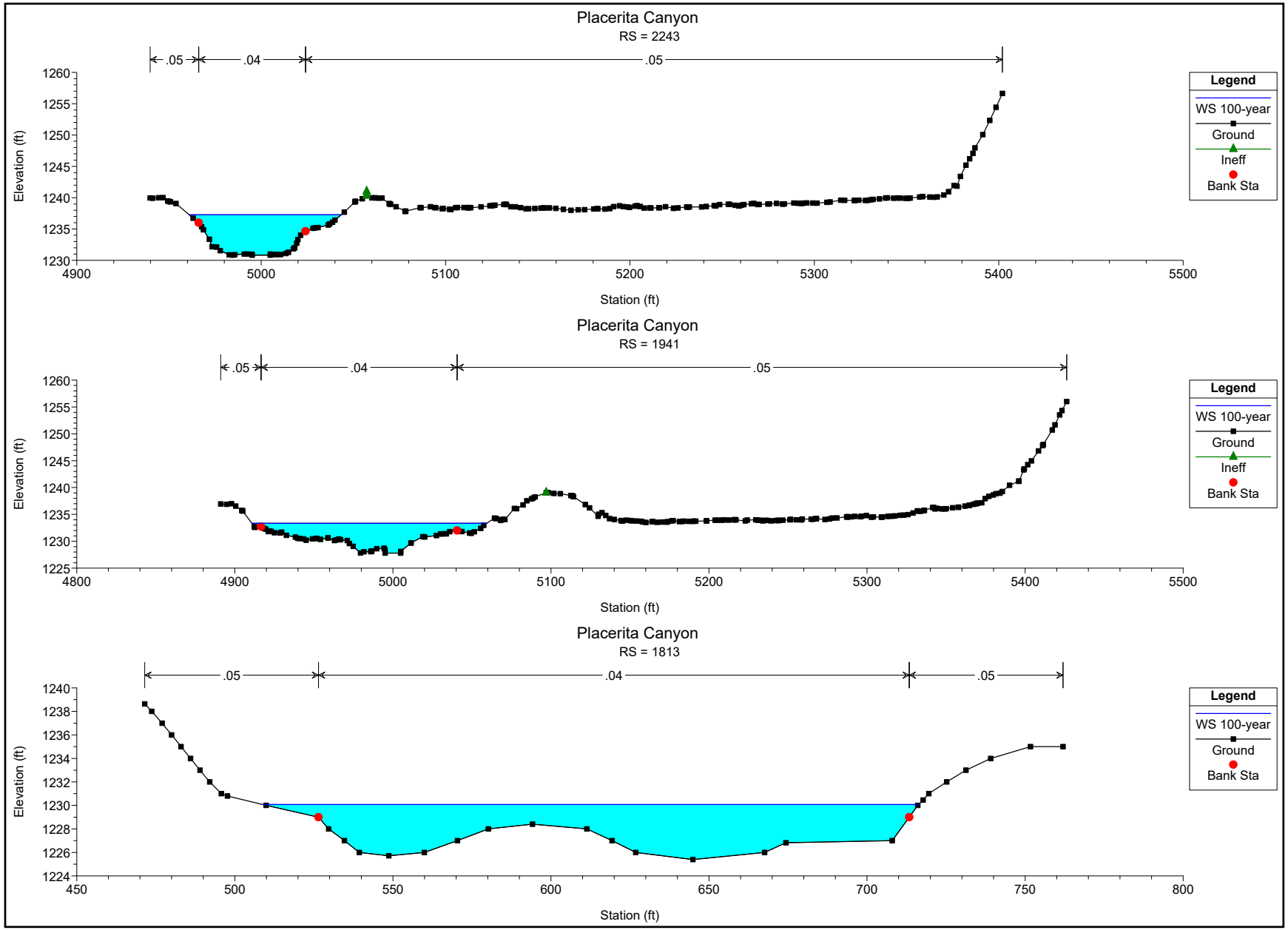
Placerita Canyon
RS = 2243
.05
.04
.05
Elevation (ft)
Station (ft)
Legend
WS 100-year
Ground
Ineff
Bank Sta
Placerita Canyon
RS = 1941
.05
.04
.05
Elevation (ft)
Station (ft)
Legend
WS 100-year
Ground
Ineff
Bank Sta
Placerita Canyon
RS = 1813
.05
.04
.05
Elevation (ft)
Station (ft)
Legend
WS 100-year
Ground
Bank Sta

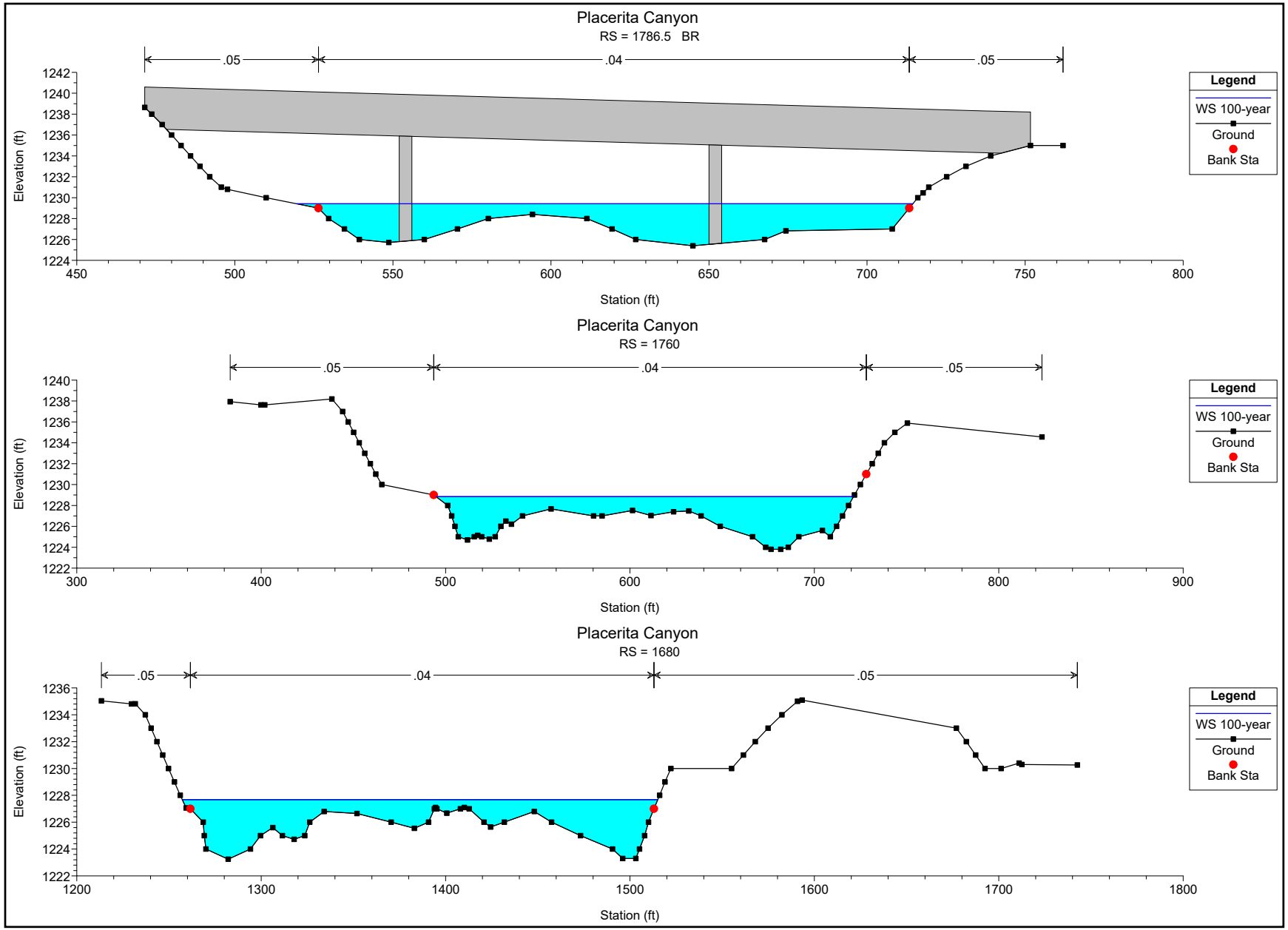
Placerita Canyon
RS = 1786.5 BR
.05
.04
.05
Elevation (ft)
Station (ft)
Legend
WS 100-year
Ground
Bank Sta
Placerita Canyon
RS = 1760
.05
.04
.05
Elevation (ft)
Station (ft)
Legend
WS 100-year
Ground
Bank Sta
Placerita Canyon
RS = 1680
.05
.04
.05
Elevation (ft)
Station (ft)
Legend
WS 100-year
Ground
Bank Sta

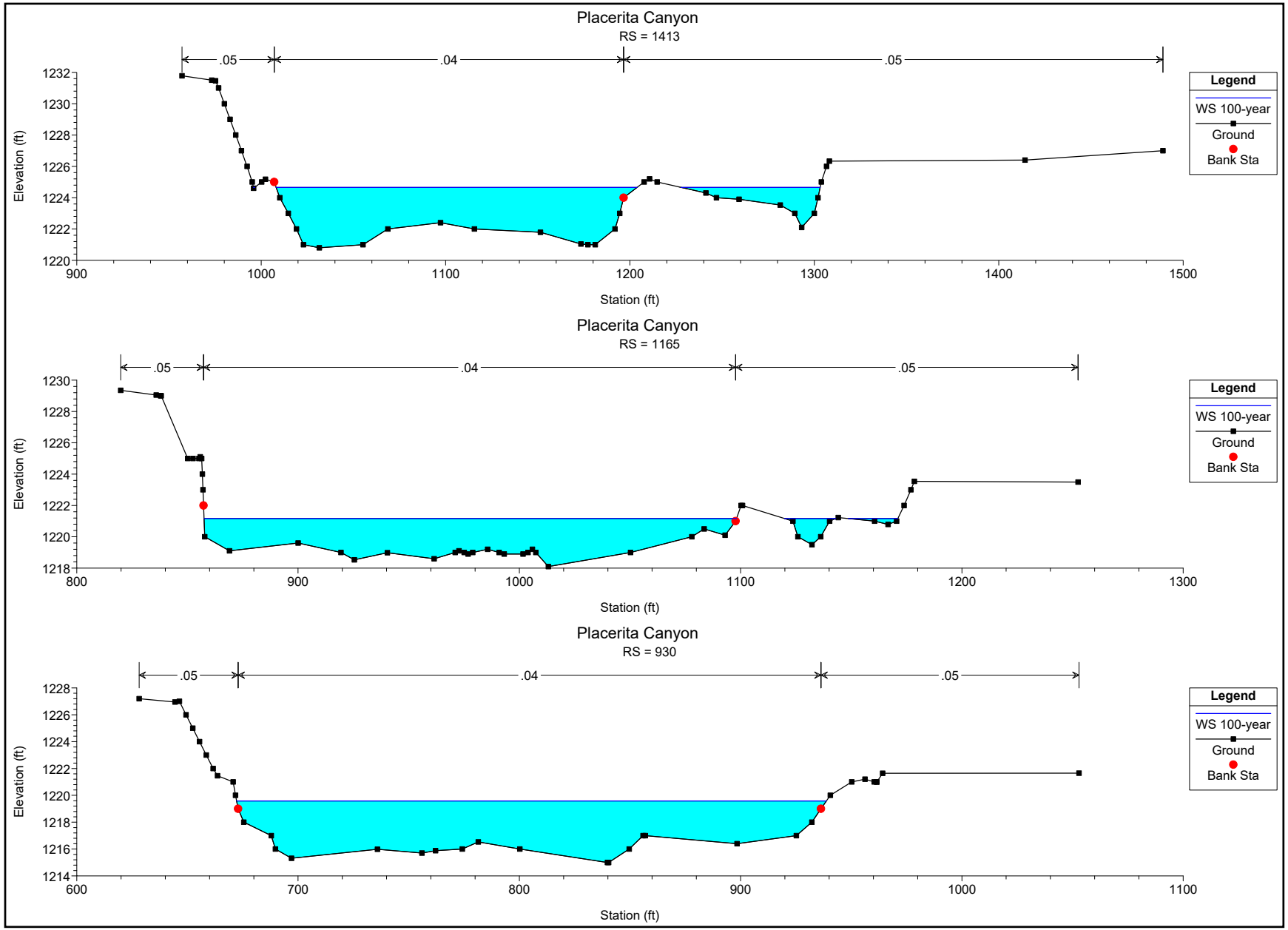
Placerita Canyon
RS = 1413
.05
.04
.05
Elevation (ft)
Station (ft)
Legend
WS 100-year
Ground
Bank Sta
Placerita Canyon
RS = 1165
.05
.04
.05
Elevation (ft)
Station (ft)
Legend
WS 100-year
Ground
Bank Sta
Placerita Canyon
RS = 930
.05
.04
.05
Elevation (ft)
Station (ft)
Legend
WS 100-year
Ground
Bank Sta

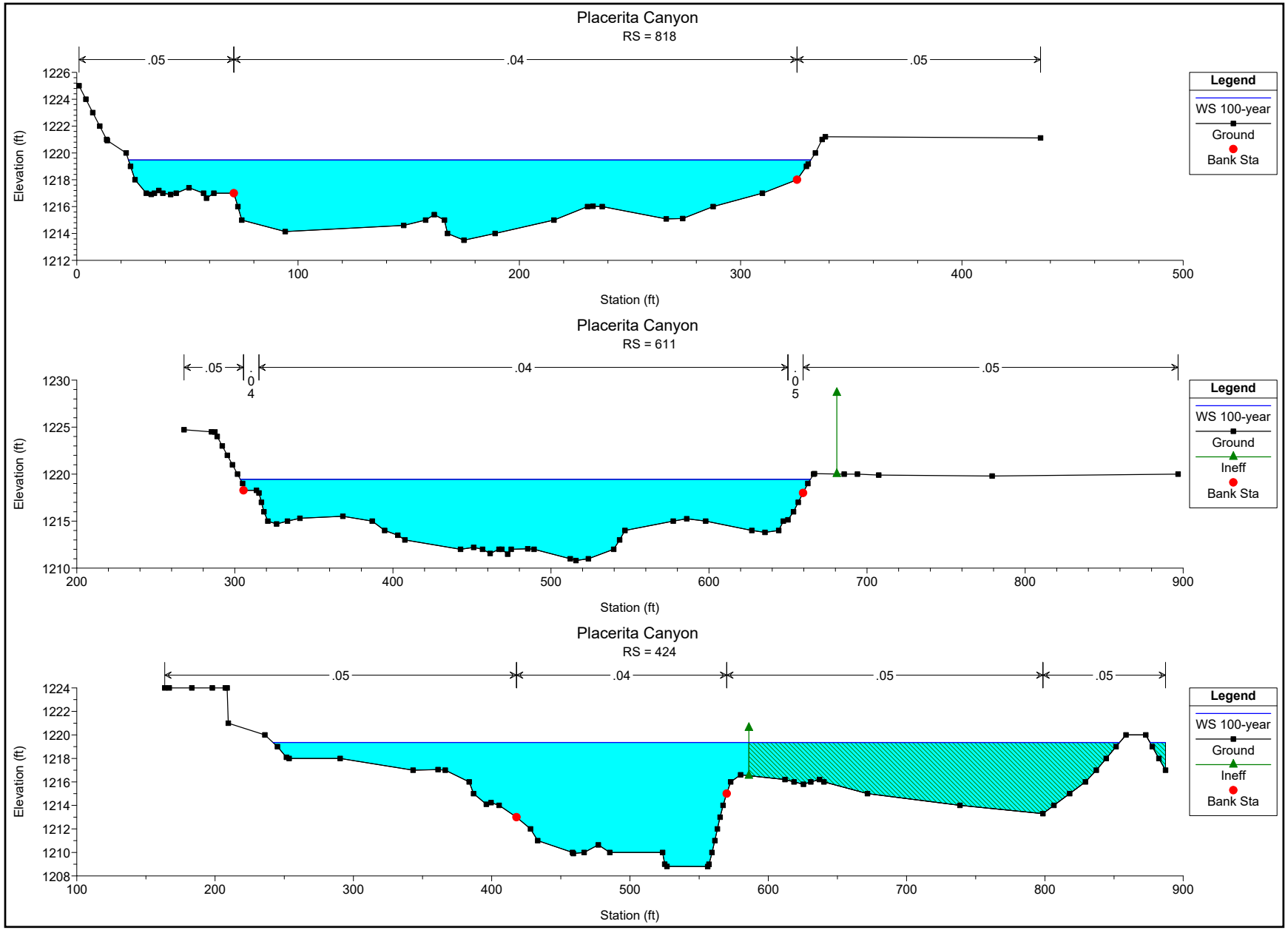
Placerita Canyon
RS = 818
.05
.04
.05
Elevation (ft)
Station (ft)
Legend
WS 100-year
Ground
Bank Sta
Placerita Canyon
RS = 611
.05
.04
.05
Elevation (ft)
Station (ft)
Legend
WS 100-year
Ground
Ineff
Bank Sta
Placerita Canyon
RS = 424
.05
.04
.05
.05
Elevation (ft)
Station (ft)
Legend
WS 100-year
Ground
Ineff
Bank Sta

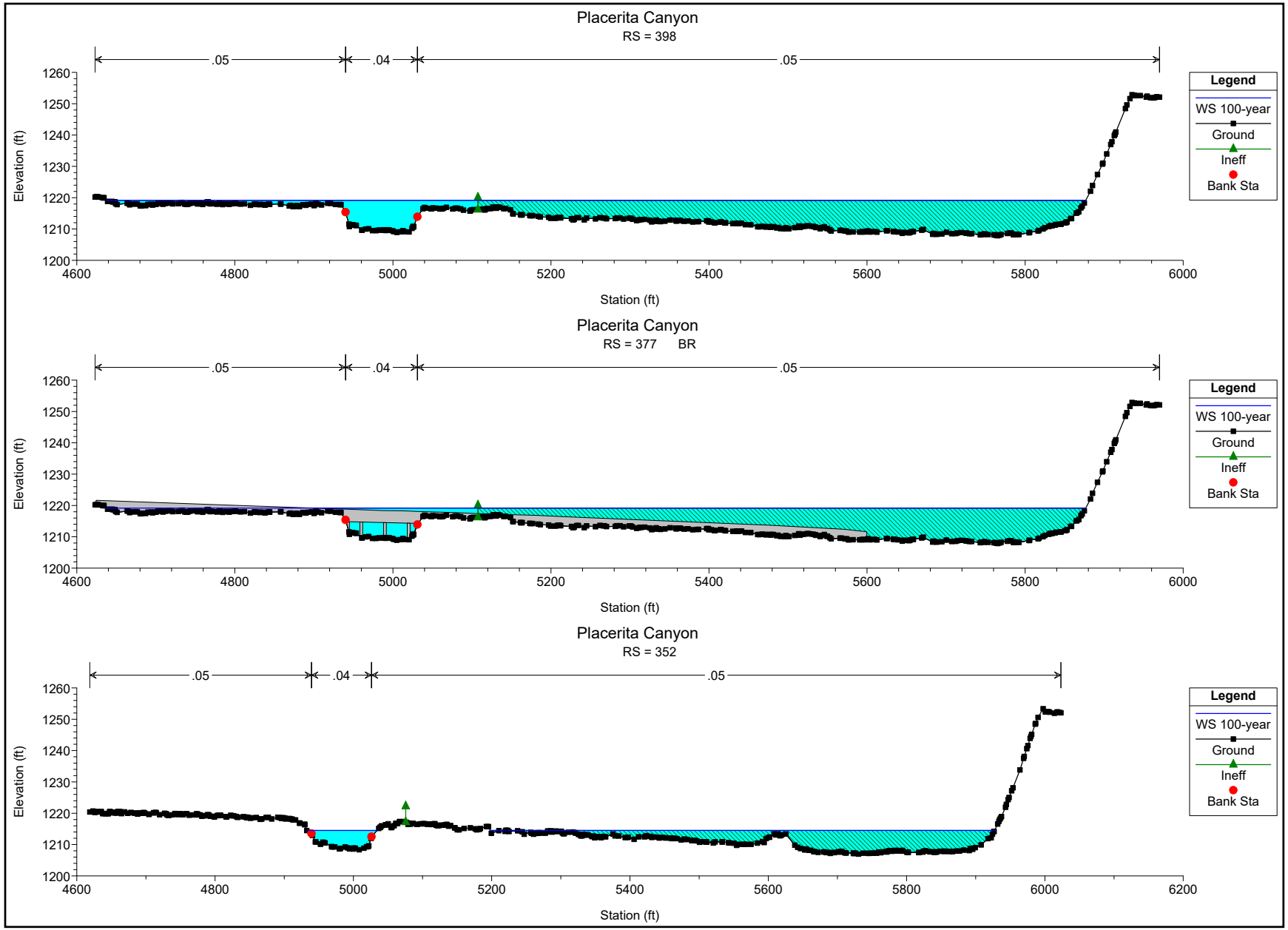
Placerita Canyon
RS = 398
.05
.04
.05
Elevation (ft)
Station (ft)
Legend
WS 100-year
Ground
Ineff
Bank Sta
Placerita Canyon
RS = 377 BR
.05
.04
.05
Elevation (ft)
Station (ft)
Legend
WS 100-year
Ground
Ineff
Bank Sta
Placerita Canyon
RS = 352
.05
.04
.05
Elevation (ft)
Station (ft)
Legend
WS 100-year
Ground
Ineff
Bank Sta

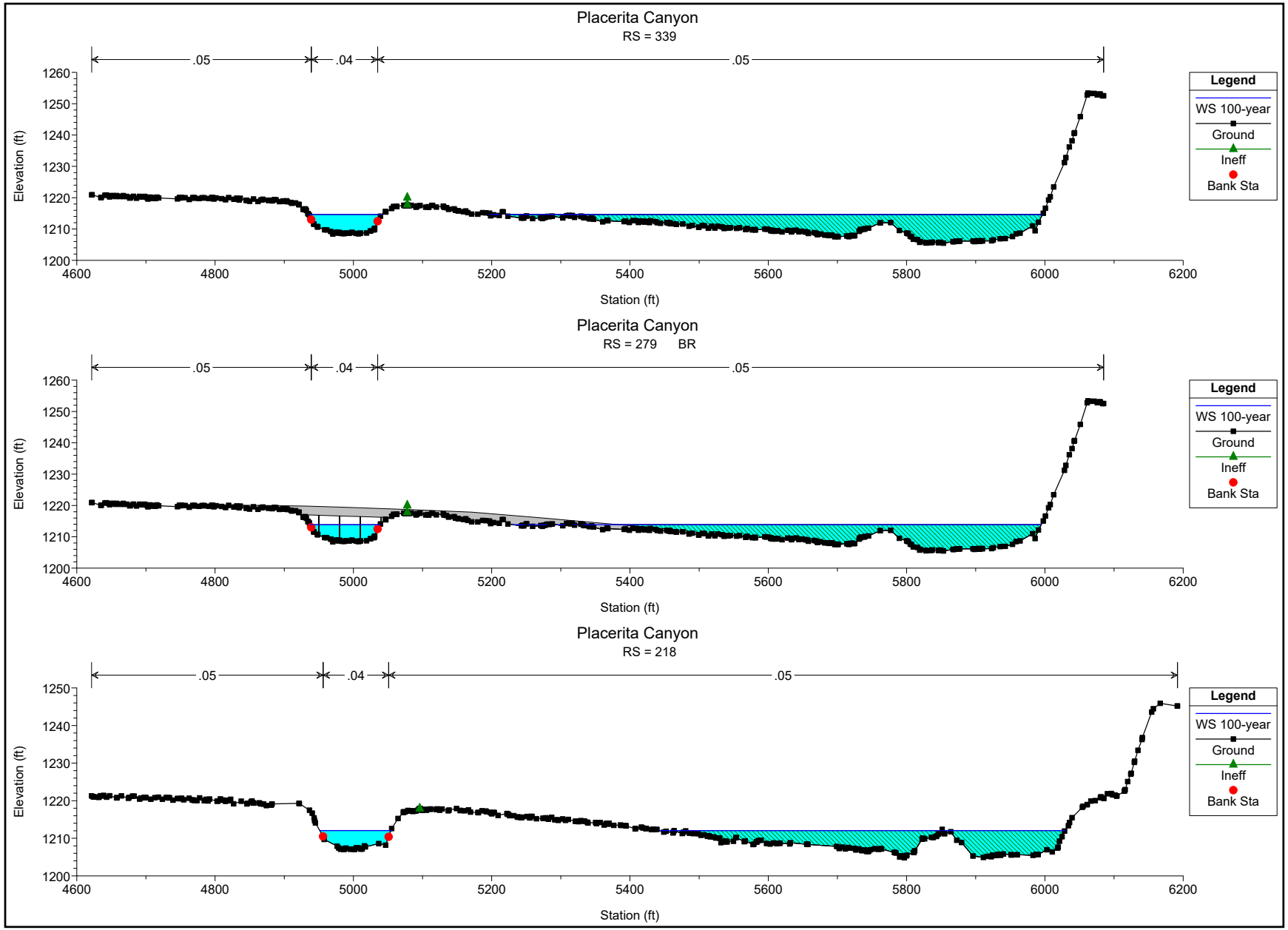
Placerita Canyon
RS = 339
.05
.04
.05
Elevation (ft)
Station (ft)
Legend
WS 100-year
Ground
Ineff
Bank Sta
Placerita Canyon
RS = 279 BR
.05
.04
.05
Elevation (ft)
Station (ft)
Legend
WS 100-year
Ground
Ineff
Bank Sta
Placerita Canyon
RS = 218
.05
.04
.05
Elevation (ft)
Station (ft)
Legend
WS 100-year
Ground
Ineff
Bank Sta

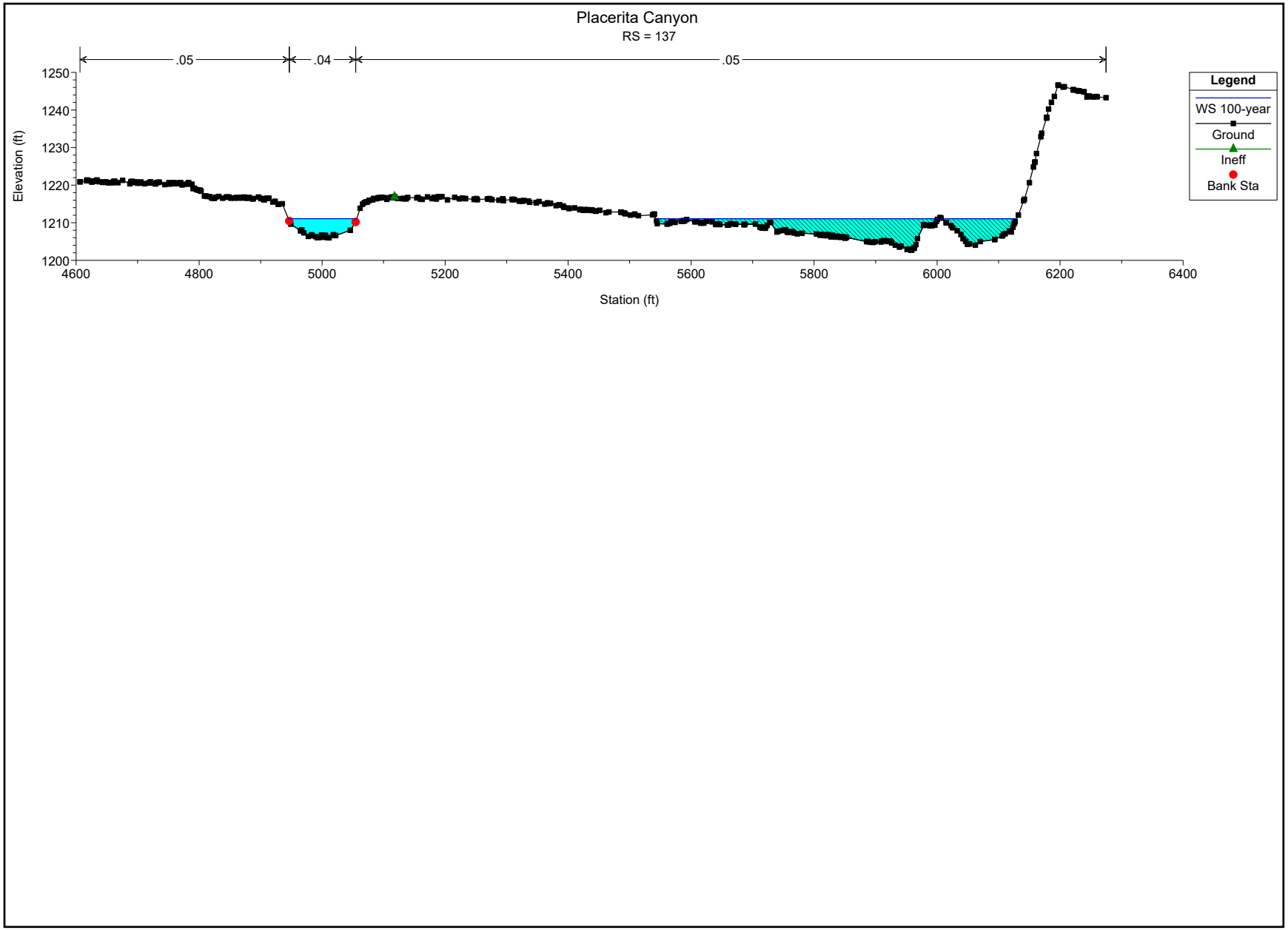
Placerita Canyon
RS = 137
.05
.04
.05
Elevation (ft)
1250
1240
1230
1220
1210
1200
4600
4800
5000
5200
5400
5600
5800
6000
6200
6400
Station (ft)
Legend
WS 100-year
Ground
Ineff
Bank Sta

APPENDIX B

FLUVIAL-12 ANALYSES

FLUVIAL-12 INPUT/OUTPUT DESCRIPTIONS

I. INPUT DESCRIPTION

The basic data requirements for a modeling study include (1) topographic maps of the river reach from the downstream end to the upstream end of study, (2) digitized data for cross sections in the HEC-2 format with cross-sectional locations shown on the accompanying topographic maps, (3) flow records or flood hydrographs and their variations along the study stream reach, it any, and (4) size distributions of sediment samples along the study reach. Additional data are required for special features of a study river reach.

The HEC-2 format for input data is used in all versions of the FLUVIAL model. Data records for HEC-2 pertaining to cross-sectional geometry (X1 and GER.), job title (T1, T2, and T3), and end of job (EJ), are used in the FLUVIAL model. If a HEC-2 data file is available, it is not necessary to delete the unused records except that the information they contain are not used in the computation. For the purpose of water- and sediment-routing, additional data pertaining to sediment characteristics, flood hydrograph, etc., are required and supplied by other data records. Sequential arrangement of data records are given in the following.

Records	**Description of Record Type**
T1,T2,T3	Title Records
G1	General Use Record
G2	General Use Records for Hydrographs
G3	General Use Record
G4	General Use Record for Selected Cross-Sectional Output
G5	General Use Record
G6	General Use Record for Selecting Times for Summary Output
G7	General Use Record for Specifying Erosion Resistant Bed Layer
GS	General Use Records for Initial Sediment Compositions
GB	General Use Records for Time Variation of Base-Level
GQ	General Use Records for Stage-Discharge Relation of Downstream Section
GI	General Use Records for Time Variation of Sediment Inflow
X1	Cross-Sectional Record
XF	Record for Specifying Special Features of a Cross Section
GR	Record for Ground Profile of a Cross Section
SB	Record for Special Bridge Routine
BT	Record for Bridge Deck Definition
EJ	End of Job Record

Variable locations for each input record are shown by the field number. Each record has an input format of (A2, F6.0, 9F8.0). Field 0 occupying columns 1 and 2 is reserved for the required record identification characters. Field 1 occupies columns 3 to 8; Fields 2 to 10 occupy 8 columns each. The data records are tabulated and described in the following.

T1, T2, T3 Records - These three records are title records that are required for each job.

Field	**Variable**	**Value**	**Description**

0	IA	T1	Record identification characters
1-10	None		Numbers and alphameric characters for title

G1 Record - This record is required for each job, used to enter the general parameters listed below. This record is placed right after the T1, T2, and T3 records.

Field	Variable	Value	Description
0	IA	G1	Record identification characters
1	TYME	+	Starting time of computation on the hydrograph, in hours
2	ETIME	+	Ending time of computation on the hydrograph, in hours
3	DTMAX	+	Maximum time increment Δt allowed, in seconds
4	ISED	1	Select Graf's sediment transport equation.
		2	Select Yang's unit stream power equation. The sediment size is between 0.063 and 10 mm.
		3	Select Engelund-Hansen sediment equation.
		4	Select Parker gravel equation.
		5	Select Ackers-White sediment equation.
		6	Select Meyer-Peter Muller equation for bed load.
5	BEF	+	Bank erodibility factor for the study reach. This value is used for each section unless otherwise specified in Field 9 of the XF value between 0 and 1 may be used.
6	IUC	0	English units are used in input and output.
		1	Metric units are used in input and output.
7	CNN	+	Manning's *n* value for the study reach. This value is used for a section unless otherwise specified in Field 4 of the XF record. If bed roughness is computed based upon alluvial bedforms as specified in Field 5 of the G3 record, only an approximate *n* value needs to be entered here.
8	PTM1	+	First time point in hours on the hydrograph at which summary output and complete cross-sectional output are requested. It is usually the peak time, but it may be left blank if no output is requested.
9	PTM2	+	Second time point on the hydrograph in hours at which summary usually the time just before the end of the simulation. This field may be left blank if no output is needed.
10	KPF	+	Frequency of printing summary output, in number of time steps.

G2 Records - These records are required for each job, used to define the flow hydrograph(s) in the channel reach. The first one (or two) G2 records are used to define the spatial variation in water discharge along the reach; the succeeding ones are employed to define the time variation(s) of the discharge. Up to 10 hydrographs, with a maximum of 120 points for each, are currently dimensioned. See section II for tributaries. These records are placed after the G1 record.

Field	Variable	Value	Description
First G2			
0	IA	G2	Record identification characters
1	IHP1	+	Number of last cross section using the first (downstream most) hydrograph. The number of section is counted from downstream to upstream with the downstream section number being one. See also section II.
2	NP1	+	Number of points connected by straight segments used to define
3	IHP2	+	Number of last section using the second hydrograph if any. Otherwise leave it blank.
4	NP2	+	Number of points used to define the second hydrograph if any. Otherwise leave it blank.
5	IHP3	+	Number of last section using the third hydrograph if any. Otherwise leave it blank.
6	NP3	+	Number of points used to define the third hydrograph if any. Otherwise leave it blank.
7	IHP4	+	Number of last section using the fourth hydrograph if any. Otherwise leave it blank.
8	NP4	+	Number of points used to define the fourth hydrograph if any. Otherwise leave it blank.
9	IHP5	+	Number of last section using the fifth hydrograph if any. Otherwise leave it blank.
10	NP5	+	Number of points used to define the fifth hydrograph if any. Otherwise leave it blank.

Second G2: Note that this record is used only if more than 5 hydrographs are used for the job. It is necessary to place a negative sign in front of NP5 located in the 10th field of the first G2 record as a means to specify that more than 5 hydrographs are used.

0	IA	G2	Record identification characters
1	IHP6	+	Number of last cross section using the sixth hydrograph if any. Otherwise leave it blank.
2	NP6	+	Number of points connected by straight segments used to define
3	IHP7	+	Number of last section using the seventh hydrograph if any. Otherwise leave it blank.
4	NP7	+	Number of points used to define the seventh hydrograph
5	IHP8	+	Number of last section using the eighth hydrograph if any. Otherwise leave it blank.
6	NP8	+	Number of points used to define the eighth hydrograph
7	IHP9	+	Number of last section using the ninth hydrograph if any. Otherwise leave it blank.
8	NP9	+	Number of points used to define the ninth hydrograph
9	IHP10	+	Number of last section using the tenth hydrograph if any. Otherwise leave it blank.
10	NP10	+	Number of points used to define the tenth hydrograph

Succeeding G2 Record(s)

1	Q11, Q21 Q31	+	Discharge coordinate of point 1 for each hydrograph, in ft^3/sec or m^3/sec
2	TM11,TM21 TM31	+	Time coordinate of point 1 for each hydrograph, in hours
3	Q12, Q22 Q32	+	Discharge coordinate of point 2 for each hydrograph, in cfs or cms
4	TM12,TM22 TM32	+	Time coordinate of point 2 for each hydrograph, in hours

Continue with additional discharge and time coordinates. Note that time coordinates must be in increasing order.

G3 Record - This record is used to define required and optional river channel features for a job as listed below. This record is placed after the G2 records.

Field	**Variable**	**Value**	**Description**

0	IA	G3	Record identification characters
1	S11	+	Slope of the downstream section, required for a job
2	BSP	0	One-on-one slope for rigid bank or bank protection
		+	Slope of bank protection in BSP horizontal units on 1 vertical unit. for all cross sections unless otherwise specified in Field 8 of the XF record for a section.
3	DSOP	0	Downstream slope is allowed to vary during simulation.
		1	Downstream slope is fixed at S11 given in Field 1.
4	TEMP	0	Water temperature is 15°C.
		+	Water temperature in degrees Celsius
5	ICNN	0	Manning's n defined in Field 7 of the G1 record or those in Field 4 of the XF records are used.
		1	Brownlie's formula for alluvial bed roughness is used to calculate Manning's n in the simulation.
6	TDZAMA	0	Thickness of erodible bed layer is 100 ft (30.5 m).
		+	Thickness of erodible bed layer in ft or m. This value is applied to
7	SPGV	0	Specific gravity of sediment is 2.65.
		+	Specific gravity of sediment
8	KGS	0	The number of size fractions for bed material is 5.
		+	The number of size fractions for bed material. It maximum value is 8.
9	PHI	0	The angle of repose for bed material is 36°.
		+	Angle of repose for bed material

G4 Record - This is an optional record used to select cross sections (up to 4) to be included at each summary output. Each cross section is identified by its number which is counted from the downstream section. This record also contains other options; it is placed after the G3 record.

Field	Variable	Value	Description
0	IA	G4	Record identification characters
1	IPLT1	+	Number of cross section
2	IPLT2	+	Number of cross section
3	IPLT3	+	Number of cross section

4	IPLT4	+	Number of cross section
5	IEXCAV	+	A positive integer indicates number of cross section where sand/gravel excavation occurs.
6	GIFAC	+	A non-zero constant is used to modify sediment inflow at the upstream section.
7	PZMIN	0 1	Minimum bed profile during simulation run is not requested. Output file entitled TZMIN for minimum bed profile is requested.
10	REXCAV	+	A non-zero value specifies rate of sand/gravel excavation at Section IEXCAV.

G5 Record - This is an optional record used to specify miscellaneous options, including unsteady-flow routing for the job based upon the dynamic wave, bend flow characteristics. If the unsteady flow option is not used, the water-surface profile for each time step is computed using the standard-step method. When the unsteady flow option is used, the downstream water-surface elevation must be specified using the GB records.

Field	Variable	Value	Description
0	IA	G5	Record identification characters
1	DT	0 +	The first time step is 100 seconds. Size of the first time step in seconds.
2	IROUT	0 1	Unsteady water routing is not used; water-surface profiles are computed using standard-step method. Unsteady water-routing based upon the dynamic wave is used to compute stages and water discharges at all cross sections for each
3	PQSS	0 3	No output of gradation of sediment load Gradation of sediment load is included in output in 1,000 ppm by weight.
5	TSED	0 +	Rate of tributary sediment inflow is 1 times the discharge ratio. Rate of tributary sediment inflow is TSED times the discharge ratio.
6	PTV	0 1	No output of transverse distribution of depth-averaged velocity Transverse distribution of depth-averaged velocity is printed. The velocity distribution is for bends with fully developed transverse flow.
10	DYMAX	0 +	No GR points are inserted for cross sections. Maximum value of spacing between adjacent points at a cross

G6 Record - This is an optional record used to select time points for summary output. Up to 30 time points may be specified. The printing frequency (KPF) in Field 10 of the G1 Record may be suppressed by using a large number such as 9999.

Field	Variable	Value	Description
First G6 Record			
0	IA	G6	Record identification characters
1	NKPS	+	Number of time points
Succeeding G6 Record(s)			
0	IA	G6	Record identification characters
1	SPTM(1)	+	First time point, in hours
2	SPTM(2)	+	Second time point, in hours

Continue with additional time points.

G7 Record - This is an optional record used to specify erosion resistant bed layer, such as a caliche layer, that has a lower rate of erosion.

Field	Variable	Value	Description
First G7 Record			
0	IA	G7	Record identification characters
1	KG7	+	Number of time points used to define the known erosion rate in relation to flow velocity
2	THICK	+	Thickness of erosion resistant layer, in feet
Succeeding G7 Record(s)			
0	IA	G7	Record identification characters
1	ERATE(1)	+	Erosion rate, in feet per hour
2	G7V(2)	+	Velocity, in feet per second

Continue with additional time points.

GS Record - At least two GS records are required for each job, used to specify initial bed-material compositions in the channel at the downstream and upstream cross sections. The first GS record is for the downstream section; it should be placed before the first X1 record and after

the G4 record, if any. The second GS record is for the upstream section; it should be placed after all cross-sectional data and just before the EJ record. Additional GS records may be inserted between two cross sections within the stream reach, with the total number of GS records not to exceed 15. Each GS record specifies the sediment composition at the cross section located before the record. From upstream to downstream, exponential decay in sediment size is assumed for the initial distribution. Sediment composition at each section is represented by five size fractions.

Field	Variable	Value	Description
0	IA	GS	Record identification characters
1	DFF	+	Geometric mean diameter of the smallest size fraction in mm
2	PC	+	Fraction of bed material in this size range

Continue with other DFF's and PC's.

GB Records - These optional records are used to define time variation of stage (water-surface elevation) at a cross section. The first set of GB records is placed before all cross section records (X1); it specifies the downstream stage. When the GB option is used, it supersedes other methods for determining the downstream stage. Other sets of GB records may be placed in other parts of the data set; each specifies the time variation of stage for the cross section immediately following the GB records.

Field	Variable	Value	Description
First GB Record			
0	IA	GB	Record identification characters
1	KBL	+	Number of points used to define base-level changes
Succeeding GB Record(s)			
0	IA	GB	Record identification characters
1	BSLL(1)	+	Base level of point 1, in ft or m
2	TMBL(1)	+	Time coordinate of point 1, in hours
3	BSLL(2)	+	Base level of point 2, in ft or m
4	TMBL(2)	+	Time coordinate of point 2, in hours

Continue with additional elevations and time coordinates, in the increasing order of time.

GQ Records - These optional records are used to define stage-discharge relation at the downstream section. The GQ input data may not used together with the GB records.

Field	Variable	Value	Description
First GQ Record			
0	IA	GQ	Record identification characters
1	KQL	+	Number of points used to define base-level changes
Succeeding GQ Record(s)			
0	IA	GQ	Record identification characters
1	BSLL(1)	+	Base level of point 1, in ft or m
2	TMQ(1)	+	Discharge of point 1, in cfs or cms
3	BSLL(2)	+	Base level of point 2, in ft or m
4	TMQ(2)	+	Discharge of point 2, in cfs or cms

Continue with additional elevations and discharges, in the increasing order of discharge.

GI Records - These optional records are used to define time variation of sediment discharge entering the study reach through the upstream cross section. The GI input data, if included, will supersede other methods for determining sediment inflow. The sediment inflow is classified into the two following cases: (1) specified inflow at the upstream section, such as by a rating curve; and (2) sediment feeding, such as from a dambreach or a sediment feeder. These two cases are distinguished by DXU in Field 2 of this record. For the first case, sediment discharge at the upstream section is computed using size fractions of bed-material at the section, but for the second case, the size fractions of feeding material need to be specified using the PCU values in this record. The upstream section does not change in geometry for the first case but it may undergo scour or fill for the second case.

Field	Variable	Value	Description
First GI Record			
0	IA	GI	Record identification characters
1	KGI	+	Number of points used to define time variation of sediment inflow.
2	DXU	+ or 0	Channel distance measured from the upstream section to the and KGI signify case 2, for which PCU values are required.
3-10	PCU	+	Size fractions of inflow material. The number of size fractions is given in Field 8 of the G3 record and the sizes for the fractions are given in the second GS record.
Succeeding GI Record(s)			
0	IA	GI	Record identification characters

1	QSU(1)	+	Sediment discharge of point 1, in cubic ft or m (net volume) per second
2	TMGI(1)	+	Time coordinate of point 1, in hours
3	QSO(2)	+	Sediment discharge of point 2
4	TMGI(2)	+	Time coordinate of point 2.

Continue with additional sediment discharges and time coordinates, in the increasing order of time coordinates.

X1 Record - This record is required for each cross section (175 cross sections can be used for the study reach); it is used to specify the cross-sectional geometry and program options applicable to that cross-section. Cross sections are arranged in sequential order starting from downstream.

Field	Variable	Value	Description
0	IA	X1	Record identification characters
1	SECNO	+	Original section number from the map
2	NP	+	Total number of stations or points on the next GR records for
7	DX	+	Length of reach between current cross section and the next down-stream section along the thalweg, in feet or meters
8	YFAC	0	Cross-section stations are not modified by the factor YFAC.
		+	Factor by which all cross-section stations are multiplied to increase or decrease area. It also multiplies YC1, YC2 and CPC in the XF record, and applies to the CI record.
9	PXSECE	0	Vertical or Z coordinate of GR points are not modified.
		±	Constant by which all cross-section elevations are raised or lowered
10	NODA	0	Cross section is subject to change.
		1	Cross section is not subject to change.

XF Record - This is an optional record used to specify special features of a cross section.

Field	Variable	Value	Description
0	IA	XF	Record identification characters
1	YC1	0	Regular erodible left bank

		+	Station of rigid left bank in ft or m, to the left of which channel dinates in GR records but not the first Y coordinate.
2	YC2	0	Regular erodible right bank
+			Station of rigid right bank, to the right of which channel is non-erodible.

Note: This station is located at toe of rigid bank; its value must be equal to one of the Y coordinates in GR records but not the last Y coordinate.

3	RAD	0	Straight channel with zero curvature
		+	Radius of curvature at channel centerline in ft or m. Center of radius is on same side of channel where the station (Y-coordinate) starts.
		-	Radius of curvature at channel centerline in ft or m. Center of radius is on opposite side of zero station. Note: RAD is used only if concave bank is rigid and so specified using the XF record. RAD produces a transverse bed scour due to curvature.
4	CN	0	Roughness of this section is the same as that given in Field 7 of the G1 record.
		+	Manning's *n* value for this section
5	CPC	0	Center of thalweg coincides with channel invert at this section.
		+	Station (Y-coordinate) of the thalweg in ft or m
6	IRC	0	Regular erodible cross section
		1	Rigid or nonerodible cross section such as drop structure or road crossing. There is no limit on the total number of such cross sections.
8	BSP	0	Slope of bank protection is the same as that given in Field 2 of the G3 record.
		+	Slope of bank protection at this section in BSP horizontal units
		5	Slope of rigid bank is defined by the GR coordinates.
9	BEFX	0	Bank erodibility factor is defined in Field 5 of the G1 record.
		+	A value between 0.1 and 1.0 for BEFX specifies the bank erodibility factor at this section.
	RWD	+	RWD is the width of bank protection of a small channel in the specified by a value greater than 1 (ft or m) in this field. When RWD is used, BEFX is not specified.
10	TDZAM	0	Erodible bed layer at this section is defined by TDZAMA in Field
		+	Thickness of erodible bed layer in ft or m. Only one decimal place is allowed for this number.
	ENEB	±	Elevation of non-erodible bed, used to define the crest elevation of a grade-control structure which may be above or below the existing

channel bed. In order to distinguish it from TDZAM, ENEB must have the value of 1 at the second decimal place. For example, the ENEB value of 365 should be inputted as 365.01 and the ENEB value of -5.2 should be inputted as -5.21. When ENEB is specified, it supersedes TDZAM and TDZAMA

CI Record - This is an optional record used to specify channel improvement options due to excavation or fill. The excavation option modifies the cross-sectional geometry by trapezoidal excavation. Those points lower than the excavation level are not filled. The fill option modifies the cross-sectional geometry by raising the bed elevations to a prescribed level. Those points higher than the fill level are not lowered. Excavation and fill can not be used at the same time. This record should be placed after the X1 and XF records but before the GR records. The variable ADDVOL in Field 10 of this record is used to keep track of the total volume of excavation or fill along a channel reach. ADDVOL specifies the initial volume of fill or excavation. A value greater or less than 0.1 needs to be entered in this field to keep track of the total volume of fill or excavation until another ADDVOL is defined.

Field	Variable	Value	Description
0	IA	G5	Record identification characters
1	CLSTA	+	Station of the centerline of the trapezoidal excavation, expressed according to the stations in the GR records, in feet or meter.
2	CELCH	+	Elevation of channel invert for trapezoidal channel, in feet or meters.
4	XLSS	+	Side slope of trapezoidal excavation, in XLSS horizontal units for 1 vertical unit.
5	ELFIL	+	Fill elevation on channel bed, in feet or meters.
6	BW	+	Bed width of trapezoidal channel, in feet or meters. This width is measured along the cross section line; therefore, a larger value should be used if a section is skewed.
10	ADDVOL	0	Volume of excavation or fill, if any, is added to the total volume already defined.
		+	Initial volume of fill on channel bed, in cubic feet or cubic meters.
		-	Initial volume of excavation from channel bed, in cubic feet or meters.

GR Record - This record specifies the elevation and station of each point for a digitized cross section; it is required for each X1 record.

Field	Variable	Value	Description
0	IA	GR	Record identification characters

1	Z1	"	Elevation of point 1, in ft or m. It may be positive or negative.
2	Y1	"	Station of point 1, in ft or m
3	Z2	"	Elevation of point 2, in ft or m
4	Y2	"	Station of point 2, in ft or m

Continue with additional GR records using up to 79 points to describe the cross section. Stations should be in increasing order.

SB Record - This special bridge record is used to specify data in the special bridge routine. This record is used together with the BT and GR records for bridge hydraulics. This record is placed between cross sections that are upstream and downstream of the bridge.

Field	Variable	Value	Description
0	IA	SB	Record identification characters
1	XK	+	Pier shape coefficient for pier loss
2	XKOR	+	Total loss coefficient for orifice flow through bridge opening
3	COFQ	+	Discharge coefficient for weir flow overtopping bridge roadway
4	IB	+	Bridge index, starting with 1 from downstream toward upstream
5	BWC	+	Bottom width of bridge opening including any obstruction
6	BWP	0	No obstruction (pier) in the bridge
		i	Total width of obstruction (piers)
7	BAREA	+	Net area of bridge opening below the low chord in square feet
9	ELLC	+	Elevation of horizontal low chord for the bridge
10	ELTRD	+	Elevation of horizontal top-of-roadway for the bridge

BT Record - This record is used to compute conveyance in the bridge section. The BT data defines the top-of -roadway and the low chord profiles of bridge. The program uses the BT, SB and GR data to distinguish and to compute low flow, orifice flow and weir flow.

Field	Variable	Value	Description
0	IA	BT	Record identification characters

1	NRD	+	Number of points defining the bridge roadway and bridge low chord to be read on the BT records
2	RDST(1)	+	Roadway station corresponding to RDEL(1) and XLCEL(1)
3	RDEL(1)	+	Top of roadway elevation at station RDST(1)
4	XLCEL(1)	+	Low chord elevation at station RDST(1)
5	RDST(2)	+	Roadway station corresponding to RDEL(2) and XLCEL(2)
6	RDEL(2)	+	Top of roadway elevation at station RDST(2)
7	XLCEL(2)	+	Low chord elevation at station RDST(2)

Continue with additional sets of RDST, RDEL, and XLCEL.

EJ Record - This record is required following the last cross section for each job. Each group of records beginning with the T1 record is considered as a job.

Field	Variable	Value	Description
0	IA	EJ	Record identification characters
1-10			Not used

II. OUTPUT DESCRIPTION

Output of the model include initial bed-material compositions, time and spatial variations of the water-surface profile, channel width, flow depth, water discharge, velocity, energy gradient, median sediment size, and bed-material discharge. In addition, cross-sectional profiles are printed at different time intervals.

Symbols used in the output are generally descriptive, some of them are defined below:

SECTION	Cross section
TIME	Time on the hydrograph
DT	Size of the time step or Δt in sec
W.S.ELEV	Water-surface elevation in ft or m
WIDTH	Surface width of channel flow in ft or m
DEPTH	Depth of flow measured from channel invert to water surface in ft or m
Q	Discharge of flow in cfs or cms
V	Mean velocity of a cross-section in fps or mps

SLOPE Energy gradient
D50 Median size or d_{50} of sediment load in mm
QS Bed-material discharge for all size fractions in cfs or cms
FR Froude number at a cross section
N Manning's roughness coefficient
SED.YIELD Bulk volume or weight of sediment having passed a cross section since beginning of simulation, in cubic yards or tons.
WSEL Water-surface elevation, in ft or m
Z Vertical coordinate (elevation) of a point on channel boundary at a cross-section, in ft or m
Y Horizontal coordinate (station) of a point on channel boundary at a cross-section, in ft or m
DZ Change in elevation during the current time step, in ft or m
TDZ Total or accumulated change in elevation, in ft or m

FLUVIAL-12 INPUT

```
*********************************************************
*     FLUVIAL-12   SIMULATION OF RIVER HYDRAULICS,      *
*     SEDIMENT TRANSPORT AND RIVER CHANNEL CHANGES      *
*             FOR USE BY HOWARD H. CHANG                *
*********************************************************

 THIS PROGRAM IS DEVELOPED AND FURNISHED BY HOWARD H. CHANG AND IS ACCEPTED AND USED BY THE RECIPIENT
 UPON THE EXPRESS UNDERSTANDING THAT THE DEVELOPER MAKES NO WARRANTIES, EXPRESS OR IMPLIED, CONCERNING
 THE ACCURACY, COMPLETENESS, RELIABILITY, USABILITY, OR SUITABILITY FOR ANY PARTICULAR PURPOSE OF THE
 INFORMATION AND DATA CONTAINED IN THIS PROGRAM OR FURNISHED IN CONNECTION THEREWITH, AND THE DEVELOPER
 SHALL BE UNDER NO LIABILITY WHATSOEVER TO ANY PERSON BY REASON OF ANY USE MADE THEREOF.

 T1      PLACERITA CREEK
 T2      BLACKHALL STUDIOS - PROPOSED CONDITIONS
 T3      FLOOD SERIES
 G1     3.00   150.50    30.00     3.00     0.50     0.00     0.04    69.20   150.00   150.00
 G2   199.00   100.00     0.00     0.00     0.00     0.00     0.00     0.00     0.00     0.00
 G2   147.00     0.10   246.00     6.70   344.00     7.50   787.00     8.30  2021.00     9.10
 G2  2021.00     9.20  1525.00     9.40  1496.00     9.60   492.00    10.50   147.00    15.00
 G2   226.00    15.10   377.00    21.70   528.00    22.50  1207.00    23.30  3100.00    24.10
 G2  3100.00    24.20  2340.00    24.40  2295.00    24.60   754.00    25.50   226.00    30.00
 G2   160.00    30.10   267.00    36.70   375.00    37.50   857.00    38.30  2200.00    39.10
 G2  2200.00    39.20  1660.00    39.40  1628.00    39.60   535.00    40.50   160.00    45.00
 G2   255.00    45.10   426.00    51.70   596.00    52.50  1363.00    53.30  3500.00    54.10
 G2  3500.00    54.20  2642.00    54.40  2591.00    54.60   852.00    55.50   255.00    60.00
 G2   300.00    60.10   500.00    66.70   700.00    67.50  1600.00    68.30  4106.00    69.10
 G2  4106.00    69.20  3100.00    69.40  3040.00    69.60  1000.00    70.50   300.00    75.00
 G2   160.00    75.10   267.00    81.70   375.00    82.50   857.00    83.30  2200.00    84.10
 G2  2200.00    84.20  1660.00    84.40  1628.00    84.60   535.00    85.50   160.00    90.00
 G2   263.00    90.10   438.00    96.70   613.00    97.50  1402.00    98.30  3600.00    99.10
 G2  3600.00    99.20  2717.00    99.40  2665.00    99.60   876.00   100.50   263.00   105.00
 G2   175.00   105.10   292.00   111.70   409.00   112.50   935.00   113.30  2400.00   114.10
 G2  2400.00   114.20  1811.00   114.40  1776.00   114.60   584.00   115.50   175.00   120.00
 G2   270.00   120.10   450.00   126.70   630.00   127.50  1441.00   128.30  3700.00   129.10
 G2  3700.00   129.20  2793.00   129.40  2739.00   129.60   901.00   130.50   270.00   135.00
 G2   153.00   135.10   255.00   141.70   358.00   142.50   818.00   143.30  2100.00   144.10
 G2  2100.00   144.20  1585.00   144.40  1554.00   144.60   511.00   145.50   153.00   150.90
 G3     0.00     0.00     0.00     0.00     0.00     0.00     0.00     0.00     0.00     0.00
 G4100000.00     0.00     0.00     0.00     0.00     0.00     1.00     0.00     0.00     0.00
 G5     0.00     0.00     0.00     0.00     0.00     0.00     0.00     0.00     0.00    20.00
 GS     0.15     0.11     0.40     0.20     0.66     0.15     1.27     0.30     4.45     0.20
 X1   137.00   165.00  4946.00  5054.00     0.00     0.00   137.00     0.00     0.00     0.00
 X3                                                                                      1.00
 GR  1220.90  4606.00  1221.20  4616.00  1221.40  4618.00  1221.20  4620.00  1221.10  4624.00
 GR  1220.80  4625.00  1221.10  4628.00  1221.00  4630.00  1221.40  4633.00  1220.90  4637.00
 GR  1220.80  4642.00  1220.70  4643.00  1220.90  4648.00  1220.70  4651.00  1220.60  4652.00
 GR  1220.60  4659.00  1221.00  4661.00  1221.00  4662.00  1220.60  4668.00  1221.30  4675.00
 GR  1220.30  4687.00  1221.00  4689.00  1221.00  4691.00  1220.80  4694.00  1220.90  4696.00
 GR  1220.50  4699.00  1220.50  4703.00  1220.60  4704.00  1220.80  4705.00  1220.40  4711.00
 GR  1220.60  4718.00  1220.70  4719.00  1220.90  4720.00  1220.60  4722.00  1220.40  4728.00
 GR  1220.30  4729.00  1220.70  4731.00  1220.70  4733.00  1220.80  4735.00  1220.10  4744.00
 GR  1220.70  4750.00  1220.30  4752.00  1220.40  4755.00  1220.70  4757.00  1220.40  4761.00
 GR  1220.60  4763.00  1220.60  4766.00  1220.60  4767.00  1220.60  4770.00  1220.10  4772.00
 GR  1220.20  4779.00  1220.40  4781.00  1220.70  4782.00  1220.50  4783.00  1220.20  4788.00
 GR  1219.10  4790.00  1219.20  4792.00  1218.80  4795.00  1218.70  4798.00  1218.80  4800.00
 GR  1218.70  4801.00  1218.50  4802.00  1218.40  4803.00  1217.10  4808.00  1217.10  4811.00
 GR  1217.00  4812.00  1216.90  4817.00  1216.50  4820.00  1216.50  4824.00  1216.80  4827.00
 GR  1217.00  4832.00  1216.50  4838.00  1216.80  4844.00  1216.80  4845.00  1216.90  4846.00
 GR  1216.80  4848.00  1216.50  4851.00  1216.60  4857.00  1216.70  4858.00  1216.60  4861.00
 GR  1216.70  4862.00  1216.60  4863.00  1216.70  4865.00  1216.80  4867.00  1216.60  4870.00
 GR  1216.90  4873.00  1216.50  4878.00  1216.70  4880.00  1216.70  4881.00  1216.30  4887.00
 GR  1216.40  4888.00  1216.80  4896.00  1216.50  4900.00  1216.40  4903.00  1216.20  4905.00
 GR  1216.10  4906.00  1216.50  4910.00  1216.50  4913.00  1215.50  4919.00  1215.70  4923.00
 GR  1214.90  4928.00  1214.90  4929.00  1215.10  4935.00  1210.40  4946.00  1209.60  4949.00
 GR  1207.80  4965.00  1208.10  4966.00  1207.30  4970.00  1206.40  4977.00  1206.80  4982.00
 GR  1206.60  4983.00  1206.30  4989.00  1206.00  4992.00  1206.10  4994.00  1206.70  4999.00
 GR  1206.60  5000.00  1206.40  5001.00  1206.10  5002.00  1206.60  5004.00  1206.60  5005.00
```

```
GR  1206.00  5008.00  1206.00  5011.00  1206.80  5018.00  1206.60  5019.00  1206.60  5022.00
GR  1207.30  5033.50  1208.00  5045.00  1210.20  5054.00  1213.90  5061.00  1214.90  5065.00
GR  1215.30  5068.00  1215.60  5071.00  1215.50  5073.00  1215.90  5076.00  1216.00  5076.00
GR  1216.10  5082.00  1216.50  5083.00  1216.40  5088.00  1216.60  5090.00  1216.60  5093.00
GR  1216.80  5096.00  1216.70  5100.00  1216.20  5105.00  1216.60  5107.00  1216.80  5112.00
GR  1216.70  5115.00  1217.00  5117.00  1216.40  5122.00  1216.40  5131.00  1216.50  5132.00
GR  1216.40  5136.00  1216.70  5139.00  1216.60  5154.00  1216.70  5156.00  1216.30  5160.00
GR  1216.20  5162.00  1216.90  5171.00  1216.40  5178.00  1216.80  5181.00  1216.30  5185.00
GR  1217.00  5189.00  1216.80  5190.00  1216.90  5194.00  1216.10  5203.00  1216.80  5215.00
GR  1216.30  5223.00
X1   218.00   140.00  4956.00  5051.00    79.00    83.00    81.00     0.00     0.00     0.00
XF  4957.00  5046.00     0.00     0.00     0.00     0.00     0.00     5.00     0.00     0.00
X3                                                                                        1.00
GR  1221.30  4621.00  1221.10  4623.00  1221.00  4624.00  1221.00  4625.00  1220.90  4631.00
GR  1221.00  4632.00  1221.30  4634.00  1221.20  4636.00  1221.40  4638.00  1220.90  4643.00
GR  1221.30  4647.00  1220.80  4657.00  1220.80  4658.00  1221.30  4664.00  1220.70  4674.00
GR  1220.90  4675.00  1221.20  4680.00  1221.20  4683.00  1220.40  4690.00  1220.70  4692.00
GR  1220.90  4697.00  1220.80  4699.00  1220.80  4700.00  1220.40  4707.00  1220.80  4712.00
GR  1220.90  4718.00  1220.40  4723.00  1220.80  4729.00  1220.90  4731.00  1220.70  4733.00
GR  1220.80  4734.00  1220.20  4739.00  1220.60  4745.00  1220.50  4750.00  1220.70  4751.00
GR  1220.20  4754.00  1220.60  4762.00  1220.20  4766.00  1220.20  4768.00  1220.10  4769.00
GR  1220.00  4773.00  1220.70  4777.00  1220.00  4784.00  1220.10  4786.00  1220.40  4787.00
GR  1219.90  4789.00  1220.40  4792.00  1219.90  4802.00  1219.90  4804.00  1220.50  4807.00
GR  1220.20  4810.00  1220.10  4812.00  1219.80  4815.00  1220.10  4818.00  1220.00  4819.00
GR  1220.20  4821.00  1220.40  4822.00  1219.20  4826.00  1219.90  4837.00  1219.20  4845.00
GR  1219.30  4846.00  1219.70  4852.00  1219.90  4853.00  1219.50  4854.00  1219.30  4855.00
GR  1219.40  4863.00  1219.20  4865.00  1219.10  4869.00  1219.10  4870.00  1218.70  4874.00
GR  1218.80  4881.00  1219.20  4882.00  1219.20  4901.50  1219.20  4921.00  1217.50  4936.00
GR  1216.70  4940.00  1215.40  4943.00  1214.70  4943.00  1214.10  4945.00  1210.50  4956.00
GR  1210.10  4957.00  1209.70  4957.00  1207.90  4976.00  1207.40  4978.00  1207.10  4981.00
GR  1207.10  4986.00  1207.30  4987.00  1207.40  4989.00  1207.10  4995.00  1207.10  4998.00
GR  1207.00  5001.00  1207.50  5004.00  1207.40  5007.00  1207.10  5010.00  1207.10  5012.00
GR  1208.00  5016.00  1207.70  5017.00  1208.60  5036.00  1208.20  5046.00  1210.40  5051.00
GR  1212.60  5055.00  1215.30  5064.00  1216.90  5072.00  1217.00  5072.00  1217.00  5074.00
GR  1217.40  5079.00  1217.20  5080.00  1217.30  5083.00  1217.10  5086.00  1217.30  5087.00
GR  1217.20  5090.00  1217.60  5093.00  1217.90  5095.00  1217.90  5096.00  1217.40  5099.00
GR  1217.70  5104.00  1217.50  5105.00  1217.80  5110.00  1217.80  5111.00  1217.70  5119.00
GR  1217.80  5121.00  1217.50  5124.00  1217.80  5128.00  1217.30  5137.00  1217.50  5138.00
GR  1217.90  5149.00  1217.40  5154.00  1217.30  5160.00  1217.50  5166.00  1217.00  5169.00
GR  1216.80  5180.00  1217.30  5185.00  1217.20  5191.00  1217.10  5192.00  1216.90  5197.00
GR  1216.60  5199.00  1216.50  5200.00  1216.90  5203.00  1216.10  5209.00  1216.60  5222.00
GR  1216.40  5223.00
X1   339.00   127.00  4939.00  5035.00   122.00   121.00   121.00     0.00     0.00     0.00
XF  4958.00  5029.00     0.00     0.00     0.00     0.00     0.00     5.00     0.00     0.00
X3                                                                                        1.00
GR  1220.90  4621.00  1220.90  4622.00  1220.10  4634.00  1220.10  4635.00  1220.80  4640.00
GR  1220.80  4643.00  1220.60  4646.00  1220.30  4647.00  1220.60  4649.00  1220.70  4652.00
GR  1220.30  4656.00  1220.70  4657.00  1220.40  4662.00  1220.70  4667.00  1220.30  4668.00
GR  1220.40  4672.00  1219.90  4676.00  1220.00  4677.00  1220.00  4677.00  1220.40  4681.00
GR  1219.80  4686.00  1220.40  4690.00  1220.20  4694.00  1220.30  4695.00  1220.40  4698.00
GR  1219.90  4702.00  1219.60  4703.00  1219.80  4704.00  1220.20  4706.00  1220.00  4707.00
GR  1220.00  4709.00  1219.80  4710.00  1219.70  4713.00  1220.20  4715.00  1219.90  4718.00
GR  1219.75  4731.50  1219.60  4745.00  1220.10  4748.00  1219.90  4749.00  1220.10  4751.00
GR  1220.00  4756.00  1219.40  4762.00  1220.00  4767.00  1219.80  4769.00  1220.00  4770.00
GR  1219.70  4776.00  1220.00  4781.00  1219.90  4782.00  1220.00  4784.00  1219.70  4790.00
GR  1220.10  4795.00  1220.00  4796.00  1219.60  4798.00  1219.90  4801.00  1219.70  4809.00
GR  1219.40  4815.00  1220.00  4819.00  1219.50  4827.00  1219.80  4831.00  1219.30  4834.00
GR  1219.80  4836.00  1219.10  4844.00  1219.20  4845.00  1218.90  4850.00  1219.60  4855.00
GR  1218.80  4862.00  1219.30  4866.00  1219.30  4867.00  1219.50  4869.00  1219.20  4877.00
GR  1219.00  4882.00  1219.40  4885.00  1219.30  4888.00  1218.80  4893.00  1219.00  4898.00
GR  1218.80  4899.00  1219.00  4903.00  1218.70  4904.00  1218.50  4909.00  1218.20  4911.00
GR  1218.30  4916.00  1217.80  4921.00  1216.30  4927.00  1216.20  4928.00  1216.30  4930.00
GR  1215.90  4931.00  1214.80  4934.00  1214.40  4936.00  1213.00  4939.00  1211.70  4942.00
GR  1211.50  4943.00  1210.70  4948.00  1209.70  4958.00  1209.70  4961.00  1209.20  4967.00
GR  1208.40  4970.00  1208.90  4975.00  1208.90  4976.00  1208.90  4978.00  1208.90  4980.00
GR  1208.60  4982.00  1208.50  4986.00  1208.70  4988.00  1208.70  4994.00  1208.90  4997.00
GR  1208.90  4998.00  1208.60  5003.00  1208.40  5007.00  1208.60  5009.00  1208.70  5010.00
GR  1208.70  5019.00  1209.40  5024.00  1209.70  5029.00  1209.90  5030.00  1210.00  5030.00
GR  1209.90  5030.00  1210.20  5030.00  1212.50  5035.00  1214.10  5039.00  1215.60  5046.00
GR  1215.40  5047.00  1216.60  5055.00  1217.20  5058.00  1217.20  5062.00  1217.60  5072.00
GR  1217.40  5074.00  1217.50  5076.00  1217.80  5078.00
```

X1	352.00	152.00	4939.00	5026.00	14.00	14.00	13.00	0.00	0.00	0.00
XF	4952.00	5022.00	0.00	0.00	0.00	0.00	0.00	5.00	0.00	0.00
GR	1220.40	4618.00	1220.70	4623.00	1220.30	4626.00	1220.40	4628.00	1220.40	4630.00
GR	1220.60	4631.00	1220.60	4635.00	1219.90	4637.00	1219.90	4638.00	1219.80	4641.00
GR	1219.90	4644.00	1219.80	4645.00	1219.90	4646.00	1220.50	4647.00	1220.40	4648.00
GR	1220.20	4652.00	1220.30	4653.00	1220.10	4654.00	1220.10	4658.00	1220.60	4659.00
GR	1220.40	4661.00	1220.50	4662.00	1219.90	4664.00	1220.40	4669.00	1220.00	4673.00
GR	1220.30	4678.00	1220.00	4683.00	1220.10	4684.00	1219.70	4688.00	1220.00	4690.00
GR	1220.10	4691.00	1220.00	4693.00	1220.00	4695.00	1220.20	4696.00	1220.20	4697.00
GR	1220.00	4698.00	1219.80	4704.00	1220.10	4711.00	1220.20	4713.00	1220.20	4714.00
GR	1219.60	4719.00	1220.00	4727.00	1219.90	4728.00	1219.60	4730.00	1219.40	4731.00
GR	1219.30	4733.00	1219.50	4738.00	1219.90	4741.00	1219.80	4744.00	1219.60	4746.00
GR	1219.80	4748.00	1219.80	4751.00	1219.70	4753.00	1219.90	4759.00	1219.40	4762.00
GR	1219.40	4763.00	1219.50	4770.00	1219.80	4773.00	1219.70	4774.00	1219.50	4776.00
GR	1219.50	4778.00	1219.00	4781.00	1219.20	4783.00	1219.20	4785.00	1219.50	4789.00
GR	1219.50	4790.00	1219.10	4793.00	1219.00	4797.00	1218.80	4799.00	1219.30	4803.00
GR	1219.20	4804.00	1219.40	4805.00	1219.40	4807.00	1219.30	4808.00	1218.80	4815.00
GR	1218.80	4816.00	1219.30	4822.00	1219.20	4824.00	1219.20	4826.00	1219.00	4830.00
GR	1218.70	4832.00	1218.70	4833.00	1218.90	4840.00	1218.80	4843.00	1218.60	4845.00
GR	1218.80	4847.00	1218.40	4851.00	1218.60	4853.00	1218.60	4859.00	1218.10	4865.00
GR	1218.20	4866.00	1218.20	4867.00	1218.70	4873.00	1218.70	4876.00	1218.20	4881.00
GR	1218.70	4890.00	1218.60	4893.00	1218.30	4896.00	1218.60	4898.00	1218.20	4901.00
GR	1218.30	4907.00	1218.10	4909.00	1218.10	4911.00	1217.90	4912.00	1217.90	4916.00
GR	1216.80	4922.00	1216.30	4929.00	1214.50	4932.00	1213.50	4939.00	1212.90	4940.00
GR	1210.80	4944.00	1210.80	4945.00	1210.20	4952.00	1210.80	4956.00	1210.50	4958.00
GR	1209.40	4968.00	1209.20	4969.00	1209.30	4973.00	1208.60	4979.00	1208.80	4981.00
GR	1209.20	4988.00	1208.90	4991.00	1208.60	4994.00	1208.70	4998.00	1208.60	4999.00
GR	1208.90	5000.00	1208.90	5002.00	1208.40	5008.00	1208.80	5015.00	1209.30	5019.00
GR	1209.30	5021.00	1209.60	5022.00	1211.90	5025.00	1212.50	5026.00	1215.10	5036.00
GR	1215.50	5038.00	1215.50	5039.00	1216.00	5040.00	1216.30	5046.00	1216.30	5047.00
GR	1216.30	5048.00	1216.60	5050.00	1215.40	5054.00	1215.50	5055.00	1215.70	5056.00
GR	1216.00	5058.00	1216.80	5061.00	1216.70	5064.00	1217.30	5066.00	1217.30	5067.00
GR	1217.30	5072.00	1217.10	5076.00						
X1	398.00	156.00	4940.00	5031.00	47.00	45.00	46.00	0.00	0.00	0.00
XF	4945.00	5020.00	0.00	0.00	0.00	0.00	0.00	5.00	0.00	0.00
GR	1220.20	4623.00	1220.40	4625.00	1220.20	4626.00	1220.30	4627.00	1220.00	4632.00
GR	1219.90	4634.00	1218.80	4638.00	1218.80	4644.00	1218.60	4645.00	1218.70	4648.00
GR	1218.10	4649.00	1217.80	4651.00	1218.20	4663.00	1218.10	4666.00	1217.70	4667.00
GR	1217.90	4669.00	1218.00	4674.00	1217.90	4676.00	1217.50	4680.00	1217.30	4681.00
GR	1217.50	4683.00	1217.50	4687.00	1217.80	4690.00	1217.90	4694.00	1217.70	4695.00
GR	1217.80	4697.00	1217.90	4700.00	1218.20	4702.00	1218.30	4703.00	1218.20	4705.00
GR	1217.90	4709.00	1218.20	4712.00	1218.20	4715.00	1218.40	4718.00	1218.00	4721.00
GR	1218.10	4728.00	1218.50	4732.00	1218.50	4733.00	1217.90	4736.00	1217.90	4738.00
GR	1217.80	4739.00	1218.00	4741.00	1218.20	4743.00	1218.30	4750.00	1218.00	4752.00
GR	1218.30	4755.00	1218.10	4758.00	1217.80	4759.00	1218.30	4763.00	1218.60	4764.00
GR	1218.70	4766.00	1218.20	4767.00	1218.00	4769.00	1218.10	4770.00	1218.00	4777.00
GR	1218.40	4780.00	1218.10	4781.00	1217.80	4784.00	1218.00	4786.00	1218.10	4788.00
GR	1217.90	4792.00	1218.10	4794.00	1218.10	4795.00	1218.20	4800.00	1217.90	4807.00
GR	1218.00	4812.00	1217.60	4819.00	1217.90	4824.00	1217.90	4825.00	1217.80	4827.00
GR	1217.80	4831.00	1217.90	4832.00	1217.80	4835.00	1217.60	4838.00	1218.00	4842.00
GR	1218.00	4843.00	1217.90	4844.00	1218.00	4857.00	1218.00	4858.00	1218.00	4858.00
GR	1217.40	4868.00	1217.60	4870.00	1217.20	4873.00	1217.20	4874.00	1217.50	4878.00
GR	1217.30	4879.00	1217.10	4881.00	1217.30	4882.00	1217.80	4886.00	1217.60	4889.00
GR	1217.80	4892.00	1217.90	4896.00	1217.50	4900.00	1218.20	4902.00	1217.90	4905.00
GR	1217.70	4909.00	1218.20	4917.00	1218.20	4921.00	1217.80	4927.00	1217.80	4932.00
GR	1217.80	4933.00	1217.80	4934.00	1215.40	4940.00	1211.60	4944.00	1210.80	4945.00
GR	1211.30	4948.00	1211.30	4949.00	1211.20	4952.00	1211.10	4953.00	1209.70	4960.00
GR	1210.00	4965.00	1210.10	4969.00	1209.50	4974.00	1209.50	4978.00	1209.50	4979.00
GR	1209.70	4982.00	1209.60	4986.00	1209.70	4988.00	1209.50	4990.00	1209.80	4993.00
GR	1209.70	4994.00	1209.70	4995.00	1209.50	4999.00	1209.20	5001.00	1208.90	5004.00
GR	1209.10	5009.00	1209.40	5012.00	1209.20	5014.00	1209.10	5020.00	1210.20	5024.00
GR	1210.80	5025.00	1210.80	5026.00	1214.00	5031.00	1216.50	5038.00	1216.90	5040.00
GR	1216.70	5042.00	1216.40	5048.00	1216.50	5049.00	1216.70	5050.00	1216.70	5054.00
GR	1216.40	5059.00	1216.60	5060.00	1216.40	5062.00	1216.60	5064.00	1216.90	5067.00
GR	1216.40	5075.00	1216.60	5078.00	1216.60	5079.00	1216.70	5081.00	1216.40	5085.00
GR	1216.00	5089.00	1215.80	5097.00	1216.10	5099.00	1216.20	5102.00	1216.20	5107.60
GR	1226.20	5127.60								
X1	424.00	51.00	0.00	0.00	0.00	0.00	26.00	0.00	0.00	0.00
XF	458.47	556.17	0.00	0.00	0.00	0.00	0.00	5.00	0.00	0.00
X3										7.00
GR	1224.00	163.57	1224.00	163.57	1224.00	166.82	1224.00	166.82	1224.00	183.15

GR	1224.00	183.15	1224.00	198.00	1224.00	198.00	1224.00	207.40	1224.00	207.40
GR	1224.00	208.71	1224.00	208.71	1221.00	209.56	1220.50	222.76	1220.00	235.96
GR	1219.00	245.09	1218.10	251.59	1218.00	253.54	1218.00	270.98	1218.00	288.43
GR	1218.00	290.47	1217.67	308.05	1217.33	325.62	1217.00	343.20	1217.00	361.24
GR	1217.00	366.45	1216.00	383.69	1215.00	386.91	1214.09	396.11	1214.20	399.60
GR	1214.00	405.42	1213.00	417.96	1212.00	428.03	1211.00	433.28	1210.50	445.88
GR	1210.00	458.47	1209.90	459.07	1210.00	466.80	1210.64	477.09	1210.00	485.37
GR	1210.00	500.69	1210.00	516.01	1210.00	523.58	1209.00	525.10	1208.81	526.72
GR	1208.81	541.44	1208.81	556.17	1209.00	557.16	1210.00	559.29	1211.00	561.40
GR	1212.00	563.21	1213.00	565.16	1214.00	567.30	1215.00	569.93	1216.00	572.83
GR	1216.60	580.01	1216.53	586.01	1224.00	600.95				
X1	611.00	58.00	0.00	0.00	0.00	0.00	187.00	0.00	0.00	0.00
X3										13.00
GR	1224.70	267.88	1224.49	285.23	1224.48	287.40	1224.00	288.79	1223.00	292.01
GR	1222.00	295.24	1221.00	298.46	1220.00	301.69	1219.00	304.91	1218.28	305.49
GR	1218.30	313.66	1218.00	315.29	1217.00	316.86	1216.00	318.41	1215.00	320.90
GR	1214.70	326.42	1215.00	333.30	1215.30	341.18	1215.41	354.79	1215.52	368.39
GR	1215.00	386.94	1214.00	394.78	1213.50	403.12	1213.00	407.59	1212.50	425.18
GR	1212.00	442.78	1212.21	451.11	1212.00	456.75	1211.56	461.49	1212.00	467.16
GR	1212.00	468.96	1211.49	472.60	1212.00	474.82	1212.05	485.34	1212.00	489.32
GR	1211.50	500.77	1211.00	512.23	1210.81	515.80	1211.00	523.65	1212.00	539.74
GR	1213.00	543.48	1214.00	546.78	1214.50	562.09	1215.00	577.40	1215.30	585.88
GR	1215.00	597.92	1214.50	612.49	1214.00	627.07	1213.80	635.38	1214.00	644.12
GR	1215.00	647.00	1215.14	649.94	1216.00	653.46	1217.00	656.48	1218.00	659.49
GR	1219.00	662.51	1220.00	666.18	1220.10	666.70	1220.00	685.49	1220.00	693.87
GR	1219.90	707.39	1219.88	725.32	1219.85	743.25	1219.82	761.18	1219.80	779.11
GR	1219.83	798.72	1219.87	818.33	1219.90	837.94	1219.93	857.55	1219.97	877.16
GR	1220.00	896.77								
X1	818.00	47.00	0.00	0.00	0.00	0.00	207.00	0.00	0.00	0.00
X3										9.00
GR	1225.10	0.00	1225.00	1.00	1224.00	4.13	1223.00	7.25	1222.00	10.37
GR	1221.00	13.50	1220.92	13.82	1220.00	22.32	1219.00	24.31	1218.00	26.30
GR	1217.00	31.39	1216.91	33.66	1217.00	35.08	1217.20	37.08	1217.00	38.91
GR	1216.90	42.42	1217.00	44.96	1217.40	50.73	1217.00	57.28	1216.63	58.63
GR	1217.00	61.95	1217.00	70.99	1216.00	72.83	1215.00	74.57	1214.14	94.21
GR	1214.29	112.05	1214.45	129.90	1214.60	147.74	1215.00	157.63	1215.40	161.54
GR	1215.00	166.15	1214.00	167.55	1213.50	174.96	1214.00	189.07	1214.50	202.36
GR	1215.00	215.64	1216.00	230.82	1216.03	233.30	1216.00	237.43	1215.54	251.91
GR	1215.09	266.40	1215.11	273.82	1216.00	287.57	1216.50	298.71	1217.00	309.84
GR	1218.00	325.49	1219.00	329.75	1219.18	330.53	1220.00	333.80	1221.00	336.82
GR	1221.20	338.27	1221.18	357.73	1221.17	377.18	1221.15	396.64	1221.14	416.09
GR	1221.12	435.55								
X1	930.00	40.00	0.00	0.00	0.00	0.00	112.00	0.00	0.00	0.00
X3										10.00
GR	1227.20	628.21	1226.95	644.38	1227.00	646.40	1226.00	649.37	1225.00	652.42
GR	1224.00	655.48	1223.00	658.53	1222.00	661.62	1221.46	663.58	1221.00	670.67
GR	1220.00	671.74	1219.00	672.91	1218.00	675.50	1217.00	687.90	1216.00	689.75
GR	1215.30	697.06	1215.64	716.46	1215.98	735.87	1215.84	745.93	1215.70	756.00
GR	1215.88	762.12	1216.00	774.21	1216.50	781.46	1216.00	800.20	1215.50	819.99
GR	1215.00	839.79	1215.00	840.33	1216.00	849.66	1217.00	855.89	1217.00	856.45
GR	1217.00	856.94	1216.80	870.75	1216.60	884.57	1216.40	898.38	1216.70	911.80
GR	1217.00	925.21	1218.00	932.21	1219.00	936.29	1220.00	940.56	1221.00	950.21
GR	1221.20	956.23	1221.00	960.36	1220.99	961.50	1221.00	961.55	1221.64	964.16
GR	1221.64	981.92	1221.64	999.67	1221.65	1017.43	1221.65	1035.18	1221.65	1052.94
X1	1165.00	56.00	0.00	0.00	0.00	0.00	235.00	0.00	0.00	0.00
XF	857.82	1170.48	0.00	0.00	0.00	0.00	0.00	5.00	0.00	0.00
X3										8.00
GR	1229.40	819.87	1229.05	835.88	1229.00	837.88	1229.00	838.14	1228.00	841.14
GR	1227.00	844.14	1226.00	847.14	1225.00	850.14	1225.00	852.52	1225.00	855.18
GR	1225.10	855.78	1225.00	856.41	1224.00	856.77	1223.00	857.03	1222.00	857.30
GR	1221.00	857.56	1220.00	857.82	1219.10	869.01	1219.35	884.52	1219.60	900.02
GR	1219.00	919.37	1218.50	925.45	1218.98	940.34	1218.79	950.92	1218.60	961.49
GR	1219.00	971.02	1219.10	972.75	1219.00	975.09	1218.90	976.84	1219.00	978.93
GR	1219.20	985.68	1219.00	990.85	1218.90	993.15	1218.90	1001.69	1219.00	1003.90
GR	1219.20	1005.90	1219.00	1007.46	1218.10	1013.13	1218.55	1031.69	1219.00	1050.24
GR	1219.50	1064.09	1220.00	1077.95	1220.50	1083.50	1220.10	1092.99	1221.00	1097.75
GR	1222.00	1100.19	1222.00	1100.82	1221.50	1112.21	1221.00	1123.61	1220.00	1125.87
GR	1219.50	1132.27	1220.00	1136.22	1221.00	1140.20	1221.23	1144.10	1221.00	1160.54
GR	1220.80	1166.62	1221.00	1170.48	1222.00	1173.86	1223.00	1176.94	1223.54	1178.51
GR	1223.53	1197.01	1223.52	1215.51	1223.51	1234.02	1223.50	1252.52		
X1	1413.00	46.00	0.00	0.00	0.00	0.00	248.00	0.00	0.00	0.00

XF	995.91	1299.98	0.00	0.00	0.00	0.00	0.00	5.00	0.00	0.00
X3										14.00
GR	1231.80	957.04	1231.50	973.21	1231.46	975.24	1231.00	976.93	1230.00	980.02
GR	1229.00	983.10	1228.00	986.19	1227.00	989.27	1226.00	992.34	1225.00	995.12
GR	1224.60	995.91	1225.00	1000.26	1225.18	1002.29	1225.00	1007.04	1224.00	1010.10
GR	1223.00	1014.71	1222.00	1019.12	1221.00	1022.90	1220.80	1031.53	1220.90	1043.38
GR	1221.00	1055.22	1222.00	1068.72	1222.20	1083.00	1222.40	1097.28	1222.00	1115.60
GR	1221.90	1133.53	1221.79	1151.46	1221.42	1162.44	1221.04	1173.42	1221.00	1177.19
GR	1221.00	1181.15	1222.00	1191.86	1223.00	1194.42	1224.00	1196.58	1225.00	1207.70
GR	1225.20	1210.61	1225.00	1214.70	1224.65	1227.93	1224.30	1241.15	1224.00	1246.91
GR	1223.90	1259.17	1223.70	1270.31	1223.50	1281.46	1223.00	1289.40	1222.10	1293.08
GR	1223.00	1299.98	1224.00	1301.95	1225.00	1303.74	1226.00	1306.62	1226.30	1308.16
GR	1226.32	1325.84	1226.33	1343.53	1226.35	1361.22	1226.37	1378.90	1226.38	1396.59
GR	1226.40	1414.27	1226.55	1432.96	1226.70	1451.65	1226.85	1470.34	1227.00	1489.03
X1	1680.00	68.00	0.00	0.00	0.00	0.00	267.00	0.00	0.00	0.00
XF	1259.30	1503.15	0.00	0.00	0.00	0.00	0.00	5.00	0.00	0.00
X3										6.00
GR	1235.10	1213.30	1235.04	1213.36	1234.81	1229.68	1234.82	1231.73	1234.00	1237.15
GR	1233.00	1240.31	1232.00	1243.46	1231.00	1246.62	1230.00	1249.78	1229.00	1252.93
GR	1228.00	1256.10	1227.06	1259.30	1227.00	1261.62	1226.00	1268.54	1225.00	1269.14
GR	1224.00	1270.01	1223.24	1282.07	1224.00	1294.15	1225.00	1299.60	1225.61	1306.29
GR	1225.00	1311.53	1224.72	1317.83	1225.00	1323.64	1226.00	1326.33	1226.83	1334.14
GR	1226.60	1351.94	1226.00	1370.50	1225.54	1383.06	1226.00	1390.78	1227.00	1393.95
GR	1227.10	1394.58	1227.00	1395.24	1226.67	1400.64	1227.00	1408.07	1227.10	1410.17
GR	1227.00	1412.81	1226.00	1420.80	1225.64	1424.42	1226.00	1431.88	1226.78	1448.09
GR	1226.00	1457.47	1225.00	1473.19	1224.00	1490.52	1223.30	1496.07	1223.30	1503.15
GR	1224.00	1505.17	1225.00	1507.93	1226.00	1510.03	1227.00	1512.97	1228.00	1516.08
GR	1229.00	1518.96	1230.00	1522.21	1230.00	1523.23	1230.00	1539.18	1230.00	1555.12
GR	1231.00	1561.54	1232.00	1567.96	1233.00	1574.85	1234.00	1582.39	1235.00	1590.86
GR	1235.09	1593.35	1234.67	1610.08	1234.25	1626.81	1233.84	1643.53	1233.42	1660.26
GR	1233.00	1676.99	1232.00	1682.43	1231.00	1687.49	1230.00	1692.55	1230.00	1701.27
GR	1230.40	1711.04	1230.30	1712.50	1230.28	1727.55	1230.26	1742.60		
X1	1760.00	58.00	0.00	0.00	0.00	0.00	80.00	0.00	0.00	0.00
XF	465.44	708.67	0.00	0.00	0.00	0.00	0.00	5.00	0.00	0.00
X3										6.00
GR	1238.00	383.00	1237.94	383.22	1237.63	399.86	1237.63	401.93	1237.92	420.14
GR	1238.20	438.36	1237.00	444.17	1236.00	447.17	1235.00	450.17	1234.00	453.17
GR	1233.00	456.17	1232.00	459.17	1231.00	462.17	1230.00	465.44	1229.50	479.53
GR	1229.00	493.62	1228.00	501.17	1227.00	503.28	1226.00	505.10	1225.00	506.91
GR	1224.70	511.92	1225.00	515.55	1225.10	517.41	1225.00	519.61	1224.78	523.68
GR	1225.00	526.89	1226.00	530.01	1226.50	532.71	1226.20	535.74	1227.00	541.74
GR	1227.67	557.23	1227.33	568.74	1227.00	580.25	1227.00	583.95	1227.00	584.86
GR	1227.52	601.36	1227.03	611.40	1227.40	623.64	1227.50	631.86	1227.00	638.57
GR	1226.00	648.93	1225.00	666.48	1224.00	673.62	1223.80	676.46	1223.80	681.74
GR	1224.00	685.88	1225.00	691.60	1225.60	704.34	1225.00	708.67	1226.00	712.05
GR	1227.00	715.28	1228.00	718.50	1229.00	721.71	1230.00	724.92	1231.00	728.14
GR	1232.00	731.37	1233.00	734.64	1234.00	737.97	1235.00	743.61	1235.89	750.46
GR	1235.56	768.71	1235.22	786.95	1234.89	805.20	1234.56	823.44		
X1	1813.00	38.00	0.00	0.00	0.00	0.00	53.00	0.00	0.00	0.00
XF	495.73	707.97	0.00	0.00	0.00	0.00	0.00	5.00	0.00	0.00
X3										2.00
GR	1239.00	471.00	1238.64	471.49	1238.00	473.71	1237.00	476.99	1236.00	479.99
GR	1235.00	482.99	1234.00	485.99	1233.00	488.99	1232.00	492.05	1231.00	495.73
GR	1230.80	497.68	1230.00	509.92	1229.00	526.47	1228.00	529.69	1227.00	534.68
GR	1226.00	539.39	1225.71	548.71	1226.00	559.95	1227.00	570.43	1228.00	580.21
GR	1228.40	594.15	1228.00	611.34	1227.00	619.31	1226.00	626.83	1225.39	644.89
GR	1225.70	656.24	1226.00	667.60	1226.82	674.32	1226.91	691.15	1227.00	707.97
GR	1228.00	710.66	1229.00	713.35	1230.00	716.06	1230.46	717.72	1231.00	719.52
GR	1232.00	725.19	1233.00	731.29	1234.00	739.10	1235.00	751.69	1235.00	762.00
X1	1941.00	199.00	4916.00	5040.00	258.00	265.00	128.00	0.00	0.00	0.00
GR	1236.90	4891.00	1236.90	4894.00	1237.00	4897.00	1236.60	4900.00	1235.70	4904.00
GR	1235.60	4905.00	1232.60	4912.00	1232.70	4916.00	1232.40	4918.00	1232.20	4919.00
GR	1231.90	4921.00	1231.80	4923.00	1231.60	4925.00	1231.50	4928.00	1231.70	4929.00
GR	1231.10	4932.00	1230.80	4938.00	1230.60	4939.00	1230.50	4941.00	1230.40	4943.00
GR	1230.20	4945.00	1230.40	4949.00	1230.50	4951.00	1230.40	4954.00	1230.60	4958.00
GR	1230.60	4959.00	1230.10	4963.00	1230.30	4964.00	1230.40	4965.00	1230.30	4966.00
GR	1230.10	4971.00	1229.60	4972.00	1229.10	4974.00	1227.80	4979.00	1228.00	4981.00
GR	1228.20	4986.00	1228.60	4989.00	1228.70	4994.00	1228.40	4995.00	1227.80	4995.00
GR	1227.80	5004.00	1228.10	5005.00	1229.70	5011.00	1230.90	5018.00	1230.80	5020.00
GR	1231.10	5027.00	1231.40	5030.00	1231.40	5032.00	1231.40	5033.00	1231.80	5036.00
GR	1232.00	5040.00	1232.00	5041.00	1231.80	5043.00	1231.50	5048.00	1231.50	5049.00

GR	1231.80	5051.00	1232.40	5055.00	1233.00	5057.00	1234.30	5064.00	1234.20	5065.00
GR	1233.90	5068.00	1234.00	5068.00	1234.10	5069.00	1234.10	5070.00	1236.10	5076.00
GR	1236.10	5078.00	1236.80	5082.00	1237.50	5084.00	1237.90	5087.00	1238.10	5088.00
GR	1238.20	5089.00	1239.10	5097.00	1239.00	5098.00	1238.90	5101.00	1238.90	5105.00
GR	1238.50	5112.00	1238.40	5113.00	1238.30	5114.00	1236.80	5121.00	1236.20	5124.00
GR	1234.70	5129.00	1235.00	5130.00	1235.30	5132.00	1234.80	5134.00	1234.20	5137.00
GR	1234.10	5140.00	1233.80	5144.00	1233.80	5145.00	1233.90	5147.00	1233.80	5150.00
GR	1233.80	5151.00	1233.80	5154.00	1233.70	5156.00	1233.60	5158.00	1233.50	5160.00
GR	1233.60	5164.00	1233.50	5167.00	1233.60	5170.00	1233.60	5172.00	1233.70	5173.00
GR	1233.80	5176.00	1233.80	5177.00	1233.70	5181.00	1233.80	5183.00	1233.70	5187.00
GR	1233.70	5189.00	1233.80	5190.00	1233.70	5191.00	1233.80	5198.00	1233.90	5203.00
GR	1233.90	5205.00	1233.90	5208.00	1234.00	5209.00	1233.90	5212.00	1234.00	5215.00
GR	1234.00	5216.00	1234.00	5217.00	1233.80	5223.00	1233.90	5224.00	1234.00	5229.00
GR	1233.90	5230.00	1233.90	5232.00	1233.80	5234.00	1233.90	5235.00	1233.90	5237.00
GR	1233.80	5239.00	1233.90	5242.00	1233.90	5243.00	1233.90	5244.00	1233.90	5246.00
GR	1234.10	5251.00	1234.00	5255.00	1234.00	5258.00	1234.10	5259.00	1234.10	5264.00
GR	1234.10	5265.00	1234.20	5267.00	1234.20	5268.00	1234.10	5273.00	1234.20	5276.00
GR	1234.30	5277.00	1234.30	5280.00	1234.60	5287.00	1234.50	5289.00	1234.60	5292.00
GR	1234.60	5295.00	1234.70	5296.00	1234.80	5299.00	1234.50	5302.00	1234.50	5304.00
GR	1234.50	5309.00	1234.60	5313.00	1234.70	5314.00	1234.70	5316.00	1234.70	5317.00
GR	1234.80	5320.00	1234.90	5323.00	1235.00	5325.00	1235.30	5329.00	1235.70	5331.00
GR	1235.60	5332.00	1235.60	5334.00	1235.70	5335.00	1235.80	5336.00	1236.30	5341.00
GR	1236.30	5342.00	1236.00	5343.00	1236.10	5344.00	1236.00	5347.00	1236.00	5349.00
GR	1236.10	5350.00	1236.20	5354.00	1236.30	5357.00	1236.60	5362.00	1236.70	5364.00
GR	1236.90	5367.00	1237.00	5368.00	1237.10	5369.00	1237.10	5370.00	1237.20	5372.00
GR	1237.90	5374.00	1238.30	5377.00	1238.60	5379.00	1238.90	5381.00	1239.00	5384.00
GR	1239.30	5385.00	1240.40	5390.00	1241.20	5396.00	1243.50	5399.00	1244.30	5401.00
GR	1245.00	5404.00	1246.80	5408.00	1247.90	5411.00	1248.00	5411.00	1250.70	5417.00
GR	1251.70	5418.00	1253.50	5421.00	1254.30	5423.00	1256.00	5426.00		
X1	2243.00	176.00	4966.00	5024.00	304.00	300.00	302.00	0.00	0.00	0.00
GR	1239.90	4939.00	1239.90	4941.00	1240.00	4944.00	1240.00	4946.00	1239.40	4949.00
GR	1239.30	4950.00	1239.10	4953.00	1236.70	4963.00	1236.00	4966.00	1235.30	4967.00
GR	1234.90	4968.00	1233.40	4971.00	1232.20	4973.00	1232.10	4975.00	1231.60	4977.00
GR	1230.90	4982.00	1230.80	4984.00	1230.90	4985.00	1231.00	4990.00	1231.00	4992.00
GR	1230.80	4995.00	1230.80	5004.00	1231.00	5005.00	1230.90	5007.00	1230.90	5008.00
GR	1230.90	5010.00	1231.10	5013.00	1231.30	5014.00	1231.80	5017.00	1232.00	5018.00
GR	1232.70	5019.00	1233.30	5019.00	1234.00	5021.00	1234.70	5024.00	1235.10	5028.00
GR	1235.20	5029.00	1235.20	5030.00	1235.60	5036.00	1235.80	5037.00	1236.10	5038.00
GR	1236.40	5040.00	1237.70	5045.00	1239.30	5050.00	1239.40	5051.00	1239.80	5054.00
GR	1240.30	5057.00	1240.00	5060.00	1240.00	5061.00	1239.90	5062.00	1239.90	5063.00
GR	1239.90	5065.00	1239.10	5069.00	1239.00	5069.00	1238.90	5070.00	1238.60	5073.00
GR	1237.80	5078.00	1238.40	5086.00	1238.60	5091.00	1238.40	5094.00	1238.30	5098.00
GR	1238.10	5102.00	1238.40	5105.00	1238.40	5106.00	1238.40	5110.00	1238.40	5112.00
GR	1238.40	5113.00	1238.50	5119.00	1238.70	5124.00	1238.80	5125.00	1238.80	5126.00
GR	1238.90	5131.00	1239.00	5132.00	1238.90	5133.00	1238.60	5135.00	1238.50	5137.00
GR	1238.40	5140.00	1238.20	5143.00	1238.20	5145.00	1238.30	5148.00	1238.30	5151.00
GR	1238.30	5152.00	1238.40	5153.00	1238.40	5156.00	1238.30	5159.00	1238.20	5163.00
GR	1238.00	5168.00	1238.10	5171.00	1238.10	5175.00	1238.20	5180.00	1238.20	5182.00
GR	1238.20	5186.00	1238.30	5189.00	1238.60	5191.00	1238.70	5194.00	1238.60	5196.00
GR	1238.50	5198.00	1238.40	5199.00	1238.70	5202.00	1238.70	5203.00	1238.60	5205.00
GR	1238.30	5207.00	1238.40	5210.00	1238.30	5211.00	1238.40	5215.00	1238.40	5216.00
GR	1238.60	5219.00	1238.30	5223.00	1238.40	5226.00	1238.50	5230.00	1238.50	5231.00
GR	1238.50	5232.00	1238.50	5238.00	1238.60	5241.00	1238.70	5245.00	1238.70	5246.00
GR	1238.90	5248.00	1239.00	5253.00	1238.90	5254.00	1238.80	5257.00	1238.70	5259.00
GR	1238.80	5260.00	1238.90	5261.00	1239.00	5265.00	1239.10	5267.00	1238.90	5269.00
GR	1238.90	5270.00	1239.00	5274.00	1239.00	5275.00	1239.10	5279.00	1239.00	5282.00
GR	1239.00	5283.00	1239.10	5288.00	1239.10	5291.00	1239.10	5293.00	1239.10	5294.00
GR	1239.20	5295.00	1239.20	5299.00	1239.10	5301.00	1239.20	5306.00	1239.30	5308.00
GR	1239.60	5314.00	1239.60	5316.00	1239.60	5321.00	1239.60	5322.00	1239.60	5324.00
GR	1239.60	5327.00	1239.60	5329.00	1239.70	5330.00	1239.70	5331.00	1239.80	5335.00
GR	1239.90	5338.00	1240.00	5339.00	1239.90	5343.00	1240.00	5345.00	1239.90	5346.00
GR	1239.90	5349.00	1239.90	5350.00	1239.90	5351.00	1240.10	5357.00	1240.20	5358.00
GR	1240.10	5362.00	1240.10	5364.00	1240.10	5366.00	1240.40	5370.00	1240.90	5372.00
GR	1241.90	5375.00	1241.80	5377.00	1243.40	5379.00	1245.20	5382.00	1246.20	5384.00
GR	1247.10	5386.00	1247.90	5387.00	1250.10	5391.00	1252.30	5395.00	1254.40	5398.00
GR	1256.60	5402.00								
X1	2634.00	196.00	4962.00	5034.00	391.00	391.00	391.00	0.00	0.00	0.00
GR	1243.90	4926.00	1243.90	4928.00	1244.20	4931.00	1243.90	4933.00	1243.60	4934.00
GR	1243.10	4936.00	1242.50	4940.00	1240.50	4945.00	1239.50	4946.00	1239.50	4950.00
GR	1239.60	4952.00	1239.60	4953.00	1239.40	4955.00	1239.10	4958.00	1239.00	4959.00
GR	1239.00	4959.00	1238.90	4962.00	1238.80	4963.00	1238.80	4965.00	1238.30	4967.00

GR	1237.80	4969.00	1237.20	4972.00	1237.10	4974.00	1237.10	4975.00	1237.00	4978.00
GR	1237.00	4979.00	1237.00	4981.00	1236.30	4984.00	1236.00	4987.00	1235.80	4988.00
GR	1235.00	4991.00	1234.60	4993.00	1234.20	4996.00	1234.40	4999.00	1234.40	5001.00
GR	1234.30	5004.00	1234.40	5006.00	1234.50	5011.00	1234.30	5012.00	1234.30	5016.00
GR	1233.10	5017.00	1233.10	5026.00	1234.30	5027.00	1237.30	5030.00	1239.30	5034.00
GR	1240.30	5036.00	1241.30	5037.00	1242.40	5043.00	1242.70	5044.00	1245.10	5051.00
GR	1245.30	5052.00	1245.50	5058.00	1245.20	5060.00	1245.30	5061.00	1245.60	5064.00
GR	1245.40	5065.00	1244.90	5066.00	1244.10	5071.00	1243.20	5075.00	1242.80	5077.00
GR	1243.40	5081.00	1243.70	5085.00	1243.50	5088.00	1243.50	5091.00	1243.50	5092.00
GR	1243.50	5093.00	1243.40	5097.00	1243.50	5098.00	1243.30	5100.00	1243.30	5103.00
GR	1243.40	5105.00	1243.20	5106.00	1243.10	5107.00	1243.20	5113.00	1243.30	5118.00
GR	1243.30	5121.00	1243.20	5128.00	1243.20	5129.00	1243.30	5132.00	1243.60	5135.00
GR	1243.30	5138.00	1243.50	5142.00	1243.40	5144.00	1243.40	5146.00	1243.50	5149.00
GR	1243.50	5151.00	1243.40	5155.00	1243.40	5157.00	1243.30	5159.00	1243.20	5163.00
GR	1243.20	5165.00	1243.20	5166.00	1243.30	5170.00	1243.20	5171.00	1243.30	5172.00
GR	1243.30	5174.00	1243.10	5180.00	1243.10	5181.00	1243.10	5183.00	1243.40	5187.00
GR	1243.40	5188.00	1243.40	5191.00	1243.40	5193.00	1243.30	5195.00	1243.40	5197.00
GR	1243.40	5198.00	1243.40	5201.00	1243.20	5204.00	1243.20	5205.00	1243.20	5208.00
GR	1243.30	5211.00	1243.30	5212.00	1243.30	5213.00	1243.30	5214.00	1243.20	5216.00
GR	1243.10	5219.00	1243.10	5221.00	1243.00	5222.00	1243.00	5224.00	1243.10	5226.00
GR	1243.70	5228.00	1243.90	5231.00	1243.50	5232.00	1243.90	5234.00	1243.90	5236.00
GR	1243.90	5243.00	1244.00	5246.00	1243.60	5250.00	1243.10	5258.00	1243.60	5268.00
GR	1243.60	5270.00	1243.40	5275.00	1243.70	5276.00	1243.80	5277.00	1243.70	5284.00
GR	1243.70	5285.00	1244.10	5291.00	1244.10	5292.00	1244.10	5293.00	1244.00	5296.00
GR	1243.70	5299.00	1243.70	5300.00	1243.70	5304.00	1243.80	5306.00	1244.00	5307.00
GR	1243.90	5313.00	1243.80	5314.00	1243.80	5317.00	1244.00	5319.00	1244.10	5322.00
GR	1243.80	5325.00	1243.90	5326.00	1244.10	5330.00	1243.90	5332.00	1243.80	5333.00
GR	1243.90	5335.00	1244.10	5337.00	1244.00	5338.00	1244.00	5339.00	1243.90	5341.00
GR	1243.90	5344.00	1243.80	5346.00	1243.70	5348.00	1244.10	5352.00	1244.10	5354.00
GR	1244.20	5360.00	1244.20	5361.00	1244.30	5362.00	1244.40	5367.00	1244.40	5369.00
GR	1244.30	5370.00	1244.30	5374.00	1244.30	5376.00	1244.30	5377.00	1244.30	5378.00
GR	1244.40	5383.00	1244.60	5384.00	1244.70	5385.00	1244.50	5386.00	1244.60	5388.00
GR	1245.20	5393.00	1245.60	5396.00	1246.30	5401.00	1246.40	5402.00	1247.60	5409.00
GR	1247.70	5410.00	1248.50	5416.00	1249.30	5418.00	1250.30	5423.00	1250.70	5424.00
GR	1250.70	5426.00	1252.00	5429.00	1252.20	5430.00	1253.80	5434.00	1254.10	5435.00
GR	1254.30	5437.00								
X1	2960.00	185.00	4958.00	5025.00	328.00	324.00	326.00	0.00	0.00	0.00
GR	1246.40	4892.00	1246.50	4893.00	1246.80	4896.00	1246.60	4900.00	1246.70	4902.00
GR	1246.40	4904.00	1246.20	4907.00	1246.10	4908.00	1245.90	4910.00	1245.90	4911.00
GR	1245.80	4915.00	1245.80	4918.00	1245.80	4920.00	1245.60	4921.00	1245.60	4922.00
GR	1245.50	4927.00	1244.60	4931.00	1244.30	4933.00	1244.30	4934.00	1243.40	4938.00
GR	1243.10	4940.00	1243.00	4941.00	1242.60	4945.00	1242.70	4947.00	1242.80	4950.00
GR	1243.10	4953.00	1242.40	4956.00	1242.50	4957.00	1242.40	4958.00	1241.60	4968.00
GR	1240.90	4971.00	1240.40	4973.00	1239.60	4974.00	1239.40	4975.00	1238.40	4979.00
GR	1237.60	4982.00	1237.50	4983.00	1237.40	4988.00	1237.30	4991.00	1237.00	4995.00
GR	1237.00	5004.00	1237.20	5005.00	1237.20	5006.00	1237.10	5010.00	1237.00	5014.00
GR	1241.10	5022.00	1243.10	5025.00	1245.10	5029.00	1249.20	5036.00	1249.90	5041.00
GR	1250.10	5043.00	1250.20	5046.00	1250.40	5051.00	1250.30	5053.00	1250.20	5058.00
GR	1250.10	5059.00	1249.60	5062.00	1249.20	5065.00	1248.60	5067.00	1248.40	5068.00
GR	1247.70	5071.00	1247.30	5075.00	1247.30	5076.00	1247.00	5078.00	1247.40	5082.00
GR	1246.90	5085.00	1246.40	5092.00	1246.20	5097.00	1246.20	5099.00	1246.10	5104.00
GR	1246.10	5107.00	1246.00	5108.00	1245.90	5112.00	1245.90	5114.00	1245.60	5119.00
GR	1245.60	5122.00	1245.60	5123.00	1245.60	5127.00	1245.50	5129.00	1245.50	5132.00
GR	1245.50	5133.00	1245.60	5136.00	1245.40	5138.00	1245.40	5140.00	1245.40	5141.00
GR	1245.60	5145.00	1245.70	5147.00	1245.60	5148.00	1245.50	5152.00	1245.40	5156.00
GR	1245.50	5161.00	1245.50	5162.00	1245.70	5169.00	1245.70	5170.00	1245.70	5171.00
GR	1245.60	5176.00	1245.60	5177.00	1245.60	5178.00	1245.60	5183.00	1245.60	5184.00
GR	1245.50	5185.00	1245.40	5189.00	1245.40	5191.00	1245.40	5192.00	1245.30	5193.00
GR	1245.40	5198.00	1245.40	5200.00	1245.50	5202.00	1245.50	5203.00	1245.50	5205.00
GR	1245.50	5207.00	1245.40	5211.00	1245.40	5212.00	1245.50	5217.00	1245.50	5219.00
GR	1245.40	5224.00	1245.40	5225.00	1245.40	5228.00	1245.40	5229.00	1245.40	5230.00
GR	1245.50	5234.00	1245.50	5236.00	1245.50	5237.00	1245.40	5243.00	1245.40	5244.00
GR	1245.40	5246.00	1245.50	5251.00	1245.50	5252.00	1245.70	5255.00	1245.80	5256.00
GR	1245.90	5258.00	1246.00	5260.00	1246.00	5264.00	1246.10	5265.00	1246.10	5268.00
GR	1246.30	5271.00	1246.40	5273.00	1246.40	5275.00	1246.40	5276.00	1246.40	5278.00
GR	1246.40	5281.00	1246.60	5285.00	1246.60	5287.00	1246.60	5289.00	1246.70	5292.00
GR	1246.60	5297.00	1246.50	5304.00	1246.50	5305.00	1246.50	5307.00	1246.50	5312.00
GR	1246.50	5313.00	1246.50	5314.00	1246.60	5318.00	1246.60	5320.00	1246.60	5321.00
GR	1246.40	5323.00	1246.30	5325.00	1245.90	5329.00	1245.80	5331.00	1246.00	5333.00
GR	1246.20	5337.00	1246.20	5344.00	1246.00	5346.00	1246.00	5348.00	1246.00	5350.00
GR	1246.00	5352.00	1245.90	5354.00	1245.70	5356.00	1245.80	5357.00	1246.00	5363.00

GR	1246.00	5364.00	1246.60	5369.00	1246.80	5371.00	1247.50	5375.00	1248.40	5378.00
GR	1248.60	5380.00	1249.40	5382.00	1250.00	5384.00	1250.10	5385.00	1252.50	5390.00
GR	1253.30	5392.00	1255.60	5396.00	1257.00	5399.00	1258.80	5402.00	1260.60	5406.00
X1	3361.00	299.00	4969.00	5021.00	402.00	399.00	401.00	0.00	0.00	0.00
GR	1254.30	4653.00	1254.30	4657.00	1254.20	4659.00	1254.10	4661.00	1254.10	4663.00
GR	1254.10	4664.00	1254.20	4665.00	1254.20	4666.00	1254.20	4667.00	1254.30	4672.00
GR	1254.10	4675.00	1254.10	4677.00	1254.50	4680.00	1254.40	4681.00	1253.80	4684.00
GR	1253.70	4685.00	1253.40	4687.00	1253.30	4688.00	1251.70	4694.00	1251.70	4695.00
GR	1252.40	4699.00	1252.10	4701.00	1252.00	4703.00	1252.00	4704.00	1252.10	4706.00
GR	1252.00	4710.00	1251.90	4711.00	1252.00	4713.00	1251.80	4714.00	1252.50	4724.00
GR	1252.80	4727.00	1252.90	4729.00	1253.00	4730.00	1252.90	4731.00	1252.90	4732.00
GR	1253.10	4737.00	1253.10	4738.00	1252.90	4740.00	1252.80	4742.00	1253.10	4745.00
GR	1253.00	4747.00	1253.20	4748.00	1251.60	4758.00	1251.20	4760.00	1251.00	4761.00
GR	1250.80	4763.00	1250.80	4764.00	1251.00	4765.00	1250.70	4775.00	1250.60	4776.00
GR	1250.30	4777.00	1250.30	4778.00	1250.80	4782.00	1250.30	4785.00	1250.30	4787.00
GR	1250.40	4792.00	1250.30	4793.00	1249.90	4796.00	1249.90	4798.00	1249.90	4799.00
GR	1249.80	4803.00	1249.60	4805.00	1249.70	4807.00	1250.20	4812.00	1250.10	4813.00
GR	1250.10	4814.00	1250.30	4817.00	1250.40	4818.00	1250.70	4822.00	1250.70	4823.00
GR	1250.40	4824.00	1250.40	4827.00	1250.40	4831.00	1250.60	4833.00	1250.30	4837.00
GR	1250.20	4839.00	1250.30	4842.00	1250.40	4843.00	1250.20	4844.00	1250.10	4847.00
GR	1250.10	4848.00	1250.10	4849.00	1250.50	4854.00	1250.30	4855.00	1250.30	4856.00
GR	1250.40	4859.00	1250.40	4860.00	1250.30	4863.00	1250.40	4864.00	1250.40	4866.00
GR	1250.30	4868.00	1250.40	4869.00	1250.20	4872.00	1250.20	4873.00	1250.10	4874.00
GR	1250.20	4880.00	1250.10	4883.00	1250.30	4885.00	1250.30	4887.00	1250.20	4890.00
GR	1250.00	4891.00	1250.10	4893.00	1250.20	4896.00	1250.10	4897.00	1250.10	4899.00
GR	1249.80	4900.00	1250.10	4901.00	1250.10	4902.00	1250.10	4904.00	1249.90	4908.00
GR	1250.10	4911.00	1249.90	4914.00	1249.80	4917.00	1249.80	4921.00	1249.60	4924.00
GR	1249.50	4927.00	1249.60	4930.00	1249.50	4931.00	1249.30	4934.00	1249.60	4937.00
GR	1249.40	4940.00	1249.50	4942.00	1249.50	4943.00	1249.70	4944.00	1249.60	4948.00
GR	1249.50	4950.00	1249.40	4951.00	1249.40	4955.00	1249.20	4957.00	1248.60	4960.00
GR	1248.60	4961.00	1248.60	4963.00	1248.00	4968.00	1247.80	4969.00	1245.50	4974.00
GR	1244.30	4976.00	1243.40	4977.00	1240.30	4980.00	1240.70	4983.00	1241.10	4985.00
GR	1240.90	4986.00	1240.90	4988.00	1241.10	4992.00	1241.00	4994.00	1241.00	4995.00
GR	1241.00	4999.00	1241.00	5001.00	1240.90	5002.00	1241.60	5009.00	1240.80	5011.00
GR	1243.60	5015.00	1245.00	5017.00	1245.30	5018.00	1246.40	5021.00	1246.20	5023.00
GR	1246.40	5024.00	1246.80	5025.00	1248.50	5030.00	1248.80	5031.00	1248.80	5032.00
GR	1248.50	5034.00	1248.90	5038.00	1248.90	5039.00	1249.20	5040.00	1249.60	5043.00
GR	1250.10	5045.00	1250.30	5046.00	1250.60	5047.00	1251.50	5049.00	1251.50	5050.00
GR	1250.90	5052.00	1251.20	5053.00	1251.60	5058.00	1251.80	5060.00	1251.80	5063.00
GR	1252.00	5066.00	1252.00	5067.00	1252.40	5072.00	1252.20	5074.00	1252.30	5077.00
GR	1252.40	5078.00	1252.50	5079.00	1252.50	5080.00	1252.40	5082.00	1252.20	5084.00
GR	1252.10	5085.00	1252.00	5087.00	1251.90	5088.00	1251.90	5090.00	1251.90	5093.00
GR	1251.90	5095.00	1251.90	5096.00	1251.90	5097.00	1252.00	5100.00	1251.90	5103.00
GR	1251.90	5107.00	1251.80	5110.00	1251.90	5114.00	1251.60	5117.00	1251.60	5121.00
GR	1251.40	5123.00	1251.40	5125.00	1251.30	5126.00	1251.30	5127.00	1251.30	5129.00
GR	1251.40	5132.00	1251.40	5133.00	1251.40	5135.00	1251.20	5137.00	1251.10	5139.00
GR	1251.20	5140.00	1251.00	5142.00	1251.00	5143.00	1251.20	5145.00	1251.30	5147.00
GR	1251.10	5149.00	1251.20	5151.00	1251.30	5154.00	1251.30	5156.00	1251.40	5158.00
GR	1251.40	5159.00	1251.50	5162.00	1251.50	5163.00	1251.40	5164.00	1251.30	5167.00
GR	1251.30	5168.00	1251.20	5170.00	1251.30	5172.00	1251.40	5175.00	1251.60	5177.00
GR	1251.40	5178.00	1251.40	5182.00	1251.40	5185.00	1251.40	5186.00	1251.30	5188.00
GR	1251.40	5189.00	1251.80	5192.00	1252.10	5194.00	1252.10	5195.00	1251.60	5198.00
GR	1251.50	5200.00	1251.50	5202.00	1251.20	5206.00	1251.60	5208.00	1251.50	5211.00
GR	1251.30	5215.00	1251.80	5222.00	1252.20	5228.00	1252.30	5230.00	1252.00	5237.00
GR	1252.00	5238.00	1252.10	5239.00	1252.30	5245.00	1252.60	5250.00	1252.70	5252.00
GR	1253.10	5252.00	1253.20	5253.00	1252.80	5260.00	1252.90	5262.00	1253.10	5268.00
GR	1253.40	5274.00	1253.50	5275.00	1253.40	5276.00	1253.30	5280.00	1253.20	5283.00
GR	1252.90	5289.00	1252.80	5290.00	1252.80	5291.00	1252.80	5293.00	1252.60	5296.00
GR	1252.40	5299.00	1252.50	5300.00	1252.60	5304.00	1252.50	5306.00	1252.30	5309.00
GR	1253.00	5313.00	1253.00	5315.00	1253.10	5317.00	1253.00	5320.00	1253.10	5321.00
GR	1253.20	5322.00	1253.40	5325.00	1253.60	5328.00	1253.80	5331.00	1253.60	5332.00
GR	1253.80	5335.00	1253.60	5339.00	1253.60	5340.00	1253.90	5343.00	1254.00	5345.00
GR	1254.10	5347.00	1253.90	5348.00	1254.30	5351.00	1254.40	5354.00	1256.10	5356.00
GR	1257.20	5359.00	1258.90	5361.00	1259.40	5362.00	1261.60	5367.00		
X1	3706.00	200.00	4978.00	5025.00	345.00	346.00	345.00	0.00	0.00	0.00
GR	1258.90	4675.00	1258.70	4676.00	1258.20	4678.00	1258.10	4682.00	1258.10	4685.00
GR	1258.10	4686.00	1258.00	4692.00	1257.80	4694.00	1258.00	4696.00	1257.80	4699.00
GR	1257.80	4702.00	1257.70	4703.00	1257.50	4706.00	1257.30	4709.00	1257.20	4711.00
GR	1257.20	4714.00	1257.20	4715.00	1257.20	4717.00	1257.20	4720.00	1257.20	4721.00
GR	1257.10	4726.00	1256.90	4727.00	1256.70	4730.00	1256.70	4731.00	1256.80	4733.00
GR	1256.90	4736.00	1256.70	4741.00	1256.60	4743.00	1256.30	4747.00	1256.20	4755.00

GR	1256.20	4756.00	1256.30	4764.00	1256.30	4766.00	1255.80	4777.00	1255.40	4782.00
GR	1255.50	4787.00	1255.90	4790.00	1255.90	4792.00	1256.20	4799.00	1256.20	4802.00
GR	1256.30	4804.00	1255.90	4807.00	1255.80	4809.00	1255.80	4810.00	1255.90	4815.00
GR	1255.90	4816.00	1256.10	4816.00	1256.30	4820.00	1257.00	4823.00	1257.20	4824.00
GR	1257.30	4825.00	1257.20	4826.00	1257.00	4830.00	1256.80	4832.00	1256.80	4833.00
GR	1256.70	4835.00	1256.70	4838.00	1256.60	4840.00	1256.70	4841.00	1256.60	4844.00
GR	1256.60	4845.00	1256.60	4848.00	1256.60	4853.00	1256.50	4854.00	1256.80	4856.00
GR	1256.90	4857.00	1256.80	4858.00	1256.70	4861.00	1256.80	4864.00	1257.20	4866.00
GR	1257.30	4868.00	1257.50	4870.00	1257.50	4871.00	1257.60	4876.00	1257.70	4878.00
GR	1257.50	4880.00	1259.10	4882.00	1259.70	4883.00	1260.10	4885.00	1259.80	4888.00
GR	1259.00	4889.00	1257.70	4891.00	1259.00	4896.00	1259.10	4897.00	1258.50	4903.00
GR	1258.70	4904.00	1260.90	4911.00	1260.40	4913.00	1258.90	4917.00	1258.80	4922.00
GR	1258.90	4925.00	1258.90	4926.00	1258.80	4930.00	1258.70	4931.00	1258.60	4933.00
GR	1258.60	4938.00	1258.60	4940.00	1258.90	4944.00	1259.10	4947.00	1259.30	4948.00
GR	1259.70	4953.00	1259.30	4956.00	1259.20	4957.00	1258.90	4958.00	1257.80	4961.00
GR	1256.90	4964.00	1255.90	4966.00	1255.90	4967.00	1255.60	4969.00	1254.90	4972.00
GR	1253.10	4975.00	1251.10	4978.00	1250.40	4979.00	1249.50	4981.00	1248.90	4982.00
GR	1245.40	4988.00	1245.10	4989.00	1244.50	4990.00	1244.60	4991.00	1244.40	4995.00
GR	1243.80	4999.00	1243.70	5000.00	1243.90	5005.00	1244.10	5005.00	1244.00	5009.00
GR	1244.00	5010.00	1244.10	5011.00	1244.40	5013.00	1244.30	5015.00	1249.30	5023.00
GR	1251.40	5025.00	1253.30	5029.00	1255.30	5033.00	1255.70	5034.00	1256.00	5036.00
GR	1256.40	5039.00	1256.70	5042.00	1257.10	5044.00	1256.80	5046.00	1256.90	5049.00
GR	1256.90	5051.00	1256.70	5053.00	1256.60	5055.00	1256.60	5058.00	1256.10	5060.00
GR	1256.10	5063.00	1256.10	5064.00	1256.10	5066.00	1256.50	5079.00	1256.60	5080.00
GR	1256.70	5083.00	1256.70	5085.00	1256.80	5089.00	1257.00	5093.00	1257.00	5095.00
GR	1257.00	5099.00	1257.00	5100.00	1257.00	5106.00	1257.00	5111.00	1257.00	5113.00
GR	1257.00	5118.00	1257.00	5120.00	1257.00	5122.00	1257.10	5124.00	1257.10	5131.00
GR	1257.20	5137.00	1257.20	5139.00	1257.30	5143.00	1257.30	5144.00	1257.30	5146.00
GR	1257.30	5149.00	1257.40	5150.00	1257.40	5155.00	1257.40	5161.00	1257.50	5162.00
GR	1257.50	5167.00	1257.50	5168.00	1257.60	5173.00	1257.60	5174.00	1257.60	5177.00
GR	1257.60	5178.00	1257.60	5179.00	1257.50	5184.00	1257.50	5202.00	1257.60	5207.00
GR	1257.60	5215.00	1257.60	5217.00	1257.70	5220.00	1257.80	5227.00	1257.80	5229.00
GR	1257.80	5230.00	1257.80	5233.00	1257.80	5235.00	1257.80	5236.00	1257.90	5238.00
GR	1257.90	5244.00	1257.90	5246.00	1257.90	5252.00	1258.30	5253.00	1267.50	5269.00
X1	3785.00	179.00	4968.00	5028.00	78.00	80.00	79.00	0.00	0.00	0.00
XF	4970.00	5021.00	0.00	0.00	0.00	0.00	0.00	5.00	0.00	0.00
GR	1257.60	4708.00	1257.60	4709.00	1257.50	4710.00	1257.40	4711.00	1257.80	4714.00
GR	1257.90	4715.00	1257.90	4716.00	1257.80	4719.00	1257.70	4723.00	1257.70	4725.00
GR	1258.30	4730.00	1258.80	4737.00	1258.80	4738.00	1257.80	4744.00	1257.80	4749.00
GR	1257.80	4750.00	1257.70	4755.00	1257.00	4760.00	1256.90	4762.00	1256.80	4764.00
GR	1256.40	4766.00	1256.60	4769.00	1256.50	4770.00	1256.70	4774.00	1256.80	4775.00
GR	1256.80	4776.00	1257.20	4780.00	1257.50	4781.00	1257.50	4782.00	1257.40	4783.00
GR	1257.70	4784.00	1256.30	4791.00	1256.30	4798.00	1256.40	4799.00	1256.40	4800.00
GR	1256.40	4801.00	1256.50	4805.00	1256.40	4807.00	1256.60	4810.00	1256.80	4811.00
GR	1257.00	4812.00	1257.30	4813.00	1258.20	4816.00	1258.40	4817.00	1258.30	4820.00
GR	1258.20	4822.00	1258.20	4823.00	1258.30	4824.00	1258.20	4826.00	1258.30	4828.00
GR	1258.30	4830.00	1258.30	4832.00	1258.20	4834.00	1258.30	4836.00	1258.40	4839.00
GR	1258.40	4840.00	1258.40	4842.00	1258.40	4843.00	1258.20	4846.00	1258.20	4848.00
GR	1258.50	4851.00	1258.60	4852.00	1258.50	4853.00	1258.30	4856.00	1258.70	4858.00
GR	1258.70	4859.00	1258.80	4862.00	1258.50	4863.00	1258.50	4864.00	1258.80	4867.00
GR	1258.90	4868.00	1258.70	4871.00	1258.60	4872.00	1258.90	4875.00	1258.90	4877.00
GR	1258.80	4879.00	1258.70	4882.00	1258.70	4883.00	1258.80	4884.00	1258.80	4886.00
GR	1258.80	4888.00	1258.90	4889.00	1258.80	4890.00	1259.00	4893.00	1259.10	4894.00
GR	1259.00	4896.00	1258.90	4897.00	1259.10	4900.00	1259.20	4901.00	1259.20	4902.00
GR	1259.20	4903.00	1259.30	4908.00	1259.30	4909.00	1259.40	4912.00	1259.40	4917.00
GR	1259.50	4918.00	1259.60	4922.00	1259.60	4925.00	1259.70	4929.00	1260.30	4936.00
GR	1260.30	4937.00	1260.40	4940.00	1260.40	4941.00	1260.60	4944.00	1260.90	4948.00
GR	1260.90	4949.00	1260.80	4950.00	1259.40	4957.00	1255.30	4964.00	1252.60	4968.00
GR	1247.30	4970.00	1244.90	4971.00	1245.30	4974.00	1246.90	4988.00	1245.30	4991.00
GR	1245.20	4992.00	1244.70	4994.00	1244.50	4995.00	1244.50	5004.00	1245.70	5005.00
GR	1246.10	5006.00	1246.20	5007.00	1246.70	5010.00	1246.70	5011.00	1245.70	5013.00
GR	1246.70	5015.00	1247.00	5017.00	1246.80	5021.00	1246.80	5022.00	1251.00	5026.00
GR	1252.80	5028.00	1253.00	5029.00	1259.20	5040.00	1259.40	5041.00	1259.50	5042.00
GR	1259.60	5044.00	1259.90	5049.00	1259.90	5050.00	1259.90	5056.00	1259.90	5062.00
GR	1260.00	5063.00	1260.00	5064.00	1260.00	5072.00	1260.00	5074.00	1260.10	5078.00
GR	1260.10	5082.00	1260.10	5084.00	1260.10	5087.00	1260.10	5088.00	1260.20	5090.00
GR	1260.20	5097.00	1260.10	5099.00	1260.00	5101.00	1260.00	5104.00	1259.80	5109.00
GR	1259.80	5110.00	1259.70	5114.00	1259.60	5116.00	1259.50	5117.00	1259.40	5120.00
GR	1259.30	5124.00	1259.40	5131.00	1259.30	5132.00	1259.30	5134.00	1259.20	5140.00
GR	1259.20	5142.00	1258.70	5153.00	1258.60	5155.00	1258.40	5169.00	1258.30	5175.00
GR	1258.60	5181.00	1259.00	5186.00	1259.30	5189.00	1259.60	5195.00	1259.70	5200.00

```
GR 1260.70 5202.00 1266.30 5214.00 1266.70 5215.00 1267.80 5217.00
X1 3814.00  171.00 4975.00 5039.00   28.00   28.00   29.00    0.00    0.00    0.00
XF 4975.00 5034.00    0.00    0.00    0.00    0.00    0.00    5.00    0.00    0.00
GR 1257.70 4719.00 1257.70 4720.00 1257.90 4725.00 1257.90 4726.00 1257.80 4728.00
GR 1257.80 4731.00 1257.40 4737.00 1257.60 4741.00 1257.60 4742.00 1257.40 4744.00
GR 1257.40 4745.00 1257.30 4747.00 1257.50 4749.00 1257.40 4751.00 1257.30 4754.00
GR 1257.30 4757.00 1257.40 4759.00 1257.20 4761.00 1257.20 4765.00 1257.40 4767.00
GR 1257.20 4769.00 1257.20 4771.00 1257.60 4773.00 1257.40 4775.00 1257.10 4778.00
GR 1257.10 4779.00 1257.40 4783.00 1258.00 4786.00 1257.80 4788.00 1257.40 4793.00
GR 1257.30 4795.00 1257.20 4798.00 1256.90 4800.00 1256.80 4801.00 1257.00 4804.00
GR 1257.00 4805.00 1256.90 4810.00 1256.80 4811.00 1257.10 4816.00 1257.10 4817.00
GR 1257.20 4820.00 1257.30 4822.00 1257.30 4823.00 1257.80 4829.00 1257.80 4830.00
GR 1258.00 4833.00 1257.90 4835.00 1258.00 4836.00 1257.90 4837.00 1258.00 4839.00
GR 1258.20 4843.00 1258.00 4845.00 1258.10 4846.00 1258.40 4850.00 1258.40 4854.00
GR 1258.50 4855.00 1258.50 4856.00 1258.20 4862.00 1258.20 4865.00 1258.20 4866.00
GR 1258.50 4869.00 1258.30 4872.00 1258.20 4874.00 1258.30 4876.00 1258.30 4879.00
GR 1258.30 4882.00 1258.40 4884.00 1258.50 4888.00 1258.40 4889.00 1258.50 4891.00
GR 1258.50 4892.00 1258.70 4894.00 1258.70 4896.00 1258.80 4900.00 1258.90 4901.00
GR 1259.10 4903.00 1259.30 4908.00 1259.30 4909.00 1259.30 4910.00 1259.50 4914.00
GR 1259.60 4917.00 1259.80 4920.00 1259.80 4923.00 1259.90 4924.00 1259.90 4926.00
GR 1260.00 4927.00 1260.00 4929.00 1260.10 4930.00 1260.20 4935.00 1260.30 4937.00
GR 1260.70 4941.00 1260.50 4943.00 1260.50 4944.00 1260.80 4948.00 1260.50 4951.00
GR 1260.70 4954.00 1259.70 4960.00 1259.50 4962.00 1256.80 4967.00 1255.30 4971.00
GR 1254.60 4972.00 1251.30 4975.00 1250.60 4976.00 1249.50 4976.00 1245.80 4982.00
GR 1246.10 4988.00 1245.90 4991.00 1245.70 4994.00 1245.50 4995.00 1245.90 5005.00
GR 1245.60 5006.00 1245.50 5007.00 1245.50 5009.00 1246.80 5014.00 1247.00 5015.00
GR 1247.00 5015.00 1246.30 5021.00 1246.20 5023.00 1246.20 5025.00 1246.40 5027.00
GR 1246.60 5030.00 1247.00 5032.00 1247.30 5034.00 1251.20 5039.00 1256.10 5043.00
GR 1257.80 5046.00 1258.40 5047.00 1260.20 5052.00 1260.20 5054.00 1260.30 5064.00
GR 1260.30 5066.00 1260.30 5067.00 1260.30 5069.00 1260.20 5073.00 1260.10 5084.00
GR 1259.90 5087.00 1259.90 5089.00 1260.00 5093.00 1260.00 5098.00 1260.00 5099.00
GR 1260.10 5104.00 1260.10 5106.00 1260.10 5107.00 1260.10 5108.00 1260.20 5113.00
GR 1260.20 5115.00 1260.30 5120.00 1260.30 5122.00 1260.30 5125.00 1260.40 5127.00
GR 1260.40 5129.00 1260.40 5131.00 1260.50 5135.00 1260.50 5137.00 1260.60 5144.00
GR 1260.70 5147.00 1260.80 5156.00 1260.80 5160.00 1260.90 5162.00 1260.90 5165.00
GR 1260.80 5169.00 1260.80 5171.00 1260.80 5175.00 1260.80 5176.00 1261.10 5181.00
GR 1262.80 5184.00 1268.00 5194.00 1268.90 5195.00 1269.30 5196.00 1272.70 5203.00
GR 1273.20 5204.00
X1 3845.00  178.00 4948.00 5053.00   33.00   31.00   31.00    0.00    0.00    0.00
GR 1257.90 4730.00 1257.80 4731.00 1257.80 4735.00 1257.90 4737.00 1257.90 4739.00
GR 1257.90 4742.00 1257.90 4743.00 1257.90 4748.00 1257.80 4749.00 1257.80 4753.00
GR 1257.80 4754.00 1257.50 4758.00 1257.80 4760.00 1257.70 4761.00 1257.50 4766.00
GR 1257.50 4768.00 1257.60 4769.00 1257.80 4772.00 1257.70 4773.00 1257.70 4776.00
GR 1257.60 4777.00 1257.60 4779.00 1257.60 4780.00 1257.80 4784.00 1257.50 4787.00
GR 1257.70 4791.00 1257.50 4794.00 1257.40 4796.00 1257.40 4803.00 1257.50 4804.00
GR 1257.40 4806.00 1257.60 4809.00 1257.40 4810.00 1257.40 4813.00 1257.70 4815.00
GR 1257.60 4816.00 1257.60 4820.00 1257.70 4821.00 1257.50 4823.00 1257.50 4827.00
GR 1257.60 4829.00 1257.60 4831.00 1257.60 4833.00 1257.70 4834.00 1257.80 4838.00
GR 1257.70 4840.00 1257.50 4842.00 1257.70 4844.00 1257.80 4847.00 1257.70 4848.00
GR 1257.70 4850.00 1257.80 4852.00 1257.90 4853.00 1257.80 4856.00 1257.80 4859.00
GR 1258.00 4860.00 1258.10 4867.00 1258.10 4869.00 1258.20 4871.00 1258.40 4873.00
GR 1258.30 4874.00 1258.30 4876.00 1258.40 4877.00 1258.70 4879.00 1258.60 4881.00
GR 1258.70 4885.00 1258.80 4886.00 1258.80 4887.00 1258.80 4890.00 1259.00 4892.00
GR 1259.00 4895.00 1259.10 4895.00 1259.10 4898.00 1259.30 4903.00 1259.30 4905.00
GR 1259.10 4913.00 1259.30 4919.00 1259.00 4920.00 1258.70 4921.00 1258.70 4924.00
GR 1258.70 4925.00 1258.30 4927.00 1257.90 4929.00 1257.70 4930.00 1257.70 4931.00
GR 1257.70 4932.00 1257.20 4934.00 1256.30 4937.00 1256.10 4939.00 1255.50 4943.00
GR 1255.00 4946.00 1254.50 4948.00 1254.00 4950.00 1253.40 4953.00 1253.20 4956.00
GR 1253.00 4959.00 1252.90 4960.00 1252.40 4964.00 1252.40 4965.00 1252.40 4968.00
GR 1252.20 4973.00 1252.20 4974.00 1252.20 4979.00 1252.10 4982.00 1251.90 4986.00
GR 1251.80 4987.00 1251.80 4988.00 1251.70 4991.00 1251.50 4994.00 1251.60 5005.00
GR 1251.80 5007.00 1251.80 5008.00 1251.80 5010.00 1252.00 5013.00 1251.90 5014.00
GR 1251.90 5016.00 1252.00 5018.00 1252.20 5020.00 1252.30 5027.00 1252.40 5028.00
GR 1252.60 5033.00 1252.60 5034.00 1252.60 5035.00 1252.70 5040.00 1253.30 5044.00
GR 1253.30 5045.00 1253.40 5046.00 1253.30 5048.00 1253.90 5052.00 1254.00 5052.00
GR 1254.00 5053.00 1254.10 5055.00 1254.80 5059.00 1254.90 5060.00 1255.30 5063.00
GR 1256.00 5066.00 1256.20 5067.00 1256.40 5068.00 1256.60 5069.00 1257.40 5074.00
GR 1257.80 5076.00 1258.80 5083.00 1259.10 5086.00 1259.90 5088.00 1259.20 5090.00
GR 1259.20 5091.00 1259.40 5093.00 1259.80 5094.00 1259.70 5095.00 1260.30 5096.00
GR 1260.90 5099.00 1260.70 5101.00 1261.20 5104.00 1261.20 5106.00 1261.10 5109.00
GR 1260.90 5112.00 1260.80 5114.00 1261.00 5116.00 1261.10 5120.00 1261.10 5122.00
```

GR	1261.00	5125.00	1261.10	5127.00	1261.10	5129.00	1261.20	5130.00	1261.30	5134.00
GR	1261.50	5139.00	1261.60	5142.00	1261.70	5144.00	1262.00	5151.00	1262.10	5153.00
GR	1262.20	5156.00	1262.30	5160.00	1262.30	5162.00	1262.40	5163.00	1264.20	5167.00
GR	1266.10	5170.00	1268.80	5174.00	1269.10	5175.00				
X1	3922.00	146.00	4921.00	5087.00	100.00	62.00	77.00	0.00	0.00	0.00
GR	1261.30	4794.00	1260.70	4802.00	1261.00	4806.00	1260.60	4810.00	1260.60	4811.00
GR	1260.20	4814.00	1260.30	4819.00	1260.20	4820.00	1260.30	4823.00	1260.40	4824.00
GR	1260.50	4825.00	1260.70	4828.00	1260.90	4830.00	1260.70	4831.00	1260.10	4835.00
GR	1259.90	4838.00	1259.70	4844.00	1259.10	4846.00	1259.10	4848.00	1259.10	4854.00
GR	1258.90	4857.00	1258.40	4861.00	1258.50	4862.00	1258.40	4863.00	1258.40	4867.00
GR	1258.40	4868.00	1258.30	4873.00	1258.40	4876.00	1258.50	4877.00	1258.50	4878.00
GR	1258.40	4879.00	1258.20	4880.00	1258.20	4881.00	1258.30	4884.00	1258.20	4886.00
GR	1258.10	4889.00	1258.20	4890.00	1258.30	4895.00	1258.30	4896.00	1258.30	4897.00
GR	1258.30	4898.00	1258.40	4901.00	1258.30	4904.00	1258.00	4907.00	1258.10	4908.00
GR	1258.00	4910.00	1257.10	4913.00	1256.70	4915.00	1256.50	4916.00	1256.10	4921.00
GR	1255.70	4924.00	1254.40	4926.00	1253.60	4931.00	1253.50	4932.00	1253.20	4933.00
GR	1253.10	4939.00	1252.90	4941.00	1253.00	4946.00	1252.90	4948.00	1252.90	4950.00
GR	1252.90	4951.00	1252.90	4954.00	1252.90	4958.00	1252.90	4960.00	1252.90	4961.00
GR	1252.80	4965.00	1252.90	4968.00	1252.80	4969.00	1252.80	4973.00	1252.80	4974.00
GR	1252.80	4976.00	1252.90	4980.00	1252.90	4981.00	1252.70	4987.00	1252.90	4988.00
GR	1253.00	4994.00	1252.60	4996.00	1252.80	5001.00	1252.60	5003.00	1252.50	5004.00
GR	1252.60	5005.00	1252.70	5010.00	1252.50	5013.00	1252.80	5021.00	1253.20	5025.00
GR	1253.80	5029.00	1253.90	5035.00	1253.60	5037.00	1253.40	5038.00	1253.40	5039.00
GR	1253.70	5045.00	1254.20	5049.00	1254.20	5050.00	1254.30	5051.00	1254.20	5060.00
GR	1254.30	5063.00	1254.20	5070.00	1254.00	5072.00	1254.30	5075.00	1254.30	5076.00
GR	1254.70	5082.00	1255.10	5086.00	1255.20	5087.00	1255.10	5092.00	1254.70	5098.00
GR	1254.70	5100.00	1254.60	5101.00	1254.60	5102.00	1254.60	5106.00	1254.70	5108.00
GR	1254.60	5112.00	1254.60	5113.00	1254.70	5115.00	1254.90	5120.00	1254.90	5121.00
GR	1255.00	5127.00	1254.90	5128.00	1254.80	5129.00	1254.20	5133.00	1254.70	5134.00
GR	1257.30	5136.00	1258.60	5140.00	1258.90	5142.00	1259.00	5144.00	1259.60	5149.00
GR	1259.70	5152.00	1259.90	5156.00	1260.00	5157.00	1260.20	5159.00	1260.30	5161.00
GR	1260.60	5164.00	1261.50	5171.00	1262.30	5175.00	1263.10	5180.00	1263.20	5181.00
GR	1263.50	5184.00	1264.10	5188.00	1264.20	5192.00	1264.30	5193.00	1264.80	5196.00
GR	1265.00	5199.00	1265.40	5202.00	1265.40	5203.00	1265.70	5205.00	1265.90	5206.00
GR	1266.30	5209.00								
X1	4001.00	141.00	4948.00	5213.00	62.00	78.00	79.00	0.00	0.00	0.00
GR	1262.20	4873.00	1262.10	4874.00	1262.20	4875.00	1261.30	4882.00	1261.20	4884.00
GR	1260.90	4884.00	1260.70	4886.00	1260.30	4889.00	1261.00	4896.00	1260.70	4905.00
GR	1260.00	4910.00	1259.60	4919.00	1259.70	4920.00	1259.60	4921.00	1259.60	4923.00
GR	1259.70	4925.00	1259.70	4927.00	1259.80	4929.00	1259.70	4934.00	1259.20	4936.00
GR	1258.90	4939.00	1258.40	4943.00	1257.90	4945.00	1257.60	4948.00	1255.80	4951.00
GR	1254.20	4955.00	1254.10	4959.00	1254.00	4961.00	1253.70	4963.00	1253.60	4965.00
GR	1253.70	4966.00	1253.70	4970.00	1253.60	4973.00	1253.70	4974.00	1253.70	4976.00
GR	1253.40	4981.00	1253.60	4985.00	1253.60	4987.00	1253.60	4988.00	1253.40	4990.00
GR	1253.50	4991.00	1253.80	4993.00	1253.80	4996.00	1253.80	4999.00	1253.80	5005.00
GR	1253.90	5006.00	1254.20	5009.00	1254.40	5011.00	1254.30	5012.00	1254.30	5014.00
GR	1254.60	5017.00	1254.60	5018.00	1254.70	5021.00	1254.90	5025.00	1254.80	5027.00
GR	1254.90	5029.00	1254.90	5032.00	1254.90	5035.00	1255.00	5038.00	1255.40	5043.00
GR	1255.50	5045.00	1255.50	5046.00	1255.40	5054.00	1255.20	5055.00	1255.00	5058.00
GR	1254.80	5061.00	1254.70	5062.00	1254.80	5065.00	1254.70	5068.00	1254.70	5070.00
GR	1254.50	5072.00	1254.50	5074.00	1254.40	5076.00	1254.60	5079.00	1254.60	5083.00
GR	1254.60	5085.00	1254.60	5088.00	1254.50	5091.00	1254.40	5101.00	1254.70	5103.00
GR	1254.70	5104.00	1254.60	5110.00	1254.70	5112.00	1254.80	5115.00	1255.00	5120.00
GR	1255.10	5124.00	1255.10	5130.00	1255.00	5131.00	1255.00	5132.00	1254.80	5137.00
GR	1254.60	5140.00	1254.50	5143.00	1254.60	5145.00	1254.50	5152.00	1254.70	5154.00
GR	1254.50	5158.00	1254.80	5163.00	1254.80	5165.00	1254.70	5167.00	1254.80	5168.00
GR	1255.30	5172.00	1255.40	5175.00	1255.40	5180.00	1255.30	5183.00	1255.20	5187.00
GR	1255.40	5188.00	1255.50	5191.00	1255.60	5192.00	1255.20	5193.00	1255.30	5196.00
GR	1254.90	5198.00	1255.00	5202.00	1255.20	5203.00	1255.40	5206.00	1255.00	5209.00
GR	1255.30	5211.00	1256.90	5213.00	1257.70	5215.00	1258.90	5218.00	1259.00	5219.00
GR	1259.10	5220.00	1259.40	5224.00	1259.50	5225.00	1259.40	5227.00	1259.40	5229.00
GR	1259.40	5233.00	1259.40	5234.00	1259.50	5236.00	1259.70	5241.00	1259.80	5243.00
GR	1259.90	5246.00	1260.20	5250.00	1260.40	5260.00	1260.90	5261.00	1262.00	5264.00
GR	1263.60	5270.00	1264.50	5273.00	1266.80	5278.00	1268.40	5281.00	1268.90	5283.00
GR	1269.80	5285.00								
X1	4158.00	153.00	4965.00	5303.00	147.00	175.00	157.00	0.00	0.00	0.00
GR	1261.70	4948.00	1261.90	4951.00	1261.90	4952.00	1261.60	4958.00	1261.30	4960.00
GR	1260.80	4961.00	1258.50	4965.00	1256.20	4969.00	1256.50	4972.00	1256.50	4976.00
GR	1256.60	4978.00	1256.50	4979.00	1256.60	4981.00	1256.10	4986.00	1255.90	4987.00
GR	1255.30	4991.00	1255.30	4993.00	1255.00	4995.00	1255.10	5005.00	1255.10	5006.00
GR	1255.00	5010.00	1255.10	5013.00	1255.10	5014.00	1255.70	5020.00	1255.70	5021.00

GR	1255.90	5023.00	1256.40	5029.00	1256.50	5030.00	1256.50	5031.00	1257.00	5036.00
GR	1257.00	5037.00	1257.80	5041.00	1257.80	5042.00	1257.80	5043.00	1257.60	5046.00
GR	1257.70	5049.00	1257.80	5052.00	1257.70	5054.00	1257.70	5057.00	1257.70	5059.00
GR	1257.90	5063.00	1258.50	5066.00	1258.40	5069.00	1258.50	5070.00	1258.50	5075.00
GR	1258.30	5079.00	1258.20	5080.00	1258.20	5082.00	1258.30	5085.00	1258.40	5089.00
GR	1257.80	5093.00	1257.80	5095.00	1257.70	5097.00	1257.60	5101.00	1258.00	5106.00
GR	1257.90	5123.00	1258.00	5125.00	1258.20	5130.00	1258.20	5131.00	1257.60	5134.00
GR	1256.10	5142.00	1256.10	5143.00	1255.90	5146.00	1256.00	5147.00	1255.70	5148.00
GR	1256.00	5155.00	1256.40	5156.00	1256.70	5157.00	1257.40	5160.00	1257.50	5162.00
GR	1257.60	5164.00	1257.90	5171.00	1257.80	5172.00	1257.40	5173.00	1257.20	5179.00
GR	1257.10	5181.00	1257.10	5183.00	1257.10	5187.00	1257.10	5188.00	1256.90	5190.00
GR	1257.10	5193.00	1256.90	5197.00	1256.90	5198.00	1257.30	5206.00	1257.20	5210.00
GR	1256.80	5213.00	1256.80	5215.00	1256.80	5221.00	1256.40	5223.00	1256.90	5227.00
GR	1257.10	5230.00	1257.20	5231.00	1256.70	5236.00	1256.60	5237.00	1256.40	5239.00
GR	1256.40	5240.00	1256.40	5241.00	1256.70	5244.00	1256.70	5246.00	1256.80	5247.00
GR	1256.80	5248.00	1256.80	5251.00	1256.90	5255.00	1257.00	5256.00	1257.00	5257.00
GR	1257.50	5261.00	1257.80	5264.00	1257.50	5266.00	1257.50	5271.00	1257.60	5272.00
GR	1257.40	5273.00	1257.60	5275.00	1257.70	5278.00	1257.20	5280.00	1257.20	5281.00
GR	1256.80	5285.00	1256.60	5288.00	1256.80	5291.00	1256.80	5292.00	1256.80	5296.00
GR	1257.20	5298.00	1257.40	5300.00	1257.70	5303.00	1257.30	5304.00	1256.40	5308.00
GR	1258.60	5309.00	1260.00	5311.00	1260.30	5313.00	1260.90	5316.00	1261.20	5318.00
GR	1261.00	5321.00	1262.80	5326.00	1262.90	5332.00	1262.90	5334.00	1263.30	5339.00
GR	1263.50	5340.00	1263.20	5341.00	1263.00	5342.00	1262.80	5347.00	1263.00	5350.00
GR	1263.30	5353.00	1263.10	5357.00	1263.10	5358.00	1263.20	5361.00	1263.10	5366.00
GR	1262.90	5368.00	1263.40	5374.00	1262.90	5376.00	1265.80	5381.00	1265.90	5382.00
GR	1268.90	5389.00	1272.30	5396.00	1272.90	5398.00				
X1	4334.00	186.00	4961.00	5247.00	179.00	175.00	176.00	0.00	0.00	0.00
GR	1264.10	4933.00	1264.10	4934.00	1264.10	4935.00	1263.80	4937.00	1263.80	4939.00
GR	1263.90	4941.00	1264.10	4946.00	1264.10	4947.00	1263.90	4951.00	1263.90	4952.00
GR	1263.60	4956.00	1261.70	4958.00	1259.80	4961.00	1258.90	4961.00	1258.40	4962.00
GR	1257.20	4964.00	1257.40	4968.00	1257.50	4969.00	1257.60	4971.00	1257.50	4973.00
GR	1257.60	4975.00	1257.40	4977.00	1257.40	4978.00	1257.40	4979.00	1257.50	4981.00
GR	1257.50	4982.00	1257.10	4986.00	1257.10	4987.00	1257.20	4991.00	1257.30	4992.00
GR	1257.40	4994.00	1257.60	4997.00	1257.80	4998.00	1258.20	5002.00	1258.30	5003.00
GR	1258.50	5005.00	1258.70	5006.00	1259.30	5018.00	1259.40	5019.00	1259.20	5025.00
GR	1259.10	5028.00	1259.30	5029.00	1260.10	5033.00	1260.00	5034.00	1259.90	5037.00
GR	1259.90	5038.00	1259.60	5046.00	1259.90	5050.00	1259.90	5052.00	1259.80	5055.00
GR	1260.10	5057.00	1260.10	5063.00	1260.10	5064.00	1260.10	5075.00	1259.70	5079.00
GR	1259.50	5081.00	1259.60	5083.00	1259.90	5088.00	1259.80	5091.00	1259.80	5092.00
GR	1259.70	5093.00	1259.50	5096.00	1259.50	5098.00	1259.60	5100.00	1259.60	5101.00
GR	1259.90	5106.00	1259.90	5107.00	1259.80	5117.00	1259.70	5121.00	1259.70	5125.00
GR	1259.80	5126.00	1259.90	5129.00	1259.90	5130.00	1259.70	5134.00	1259.80	5135.00
GR	1259.80	5137.00	1259.50	5141.00	1259.40	5142.00	1259.40	5144.00	1259.80	5150.00
GR	1259.90	5151.00	1259.90	5152.00	1260.00	5156.00	1259.60	5158.00	1259.60	5159.00
GR	1259.70	5162.00	1259.70	5163.00	1260.00	5166.00	1260.50	5170.00	1260.50	5182.00
GR	1260.50	5186.00	1260.60	5188.00	1260.90	5192.00	1260.90	5193.00	1260.30	5200.00
GR	1260.30	5201.00	1260.60	5208.00	1260.40	5211.00	1259.90	5213.00	1259.30	5217.00
GR	1259.10	5218.00	1259.10	5219.00	1259.10	5220.00	1259.60	5225.00	1260.00	5227.00
GR	1260.40	5233.00	1260.40	5234.00	1260.30	5235.00	1260.30	5237.00	1260.30	5239.00
GR	1260.30	5240.00	1260.40	5242.00	1260.40	5243.00	1261.00	5246.00	1261.10	5247.00
GR	1260.90	5251.00	1260.90	5254.00	1260.90	5255.00	1260.20	5260.00	1260.70	5265.00
GR	1260.70	5266.00	1260.70	5267.00	1262.30	5275.00	1262.40	5276.00	1262.10	5279.00
GR	1261.90	5281.00	1263.10	5283.00	1263.50	5284.00	1263.50	5285.00	1263.80	5288.00
GR	1264.30	5297.00	1264.60	5303.00	1264.70	5308.00	1266.20	5311.00	1267.50	5313.00
GR	1268.90	5316.00	1270.80	5319.00	1273.60	5323.00	1274.90	5327.00	1277.30	5331.00
GR	1277.30	5332.00	1281.70	5337.00	1281.80	5338.00	1284.30	5348.00	1285.20	5350.00
GR	1284.90	5352.00	1285.20	5353.00	1286.80	5357.00	1288.30	5362.00	1289.30	5363.00
GR	1290.20	5365.00	1290.60	5366.00	1291.50	5368.00	1294.40	5375.00	1294.60	5376.00
GR	1296.10	5380.00	1296.30	5381.00	1297.10	5383.00	1298.90	5389.00	1299.50	5390.00
GR	1299.80	5391.00	1301.70	5395.00	1302.90	5398.00	1304.00	5403.00	1305.60	5408.00
GR	1305.70	5412.00	1305.80	5414.00	1306.00	5416.00	1306.00	5418.00	1306.10	5422.00
GR	1306.10	5425.00	1306.30	5429.00	1306.30	5430.00	1306.40	5433.00	1306.30	5434.00
GR	1306.30	5436.00	1305.70	5449.00	1305.90	5451.00	1306.00	5452.00	1306.10	5454.00
GR	1306.10	5455.00	1305.70	5460.00	1305.60	5461.00	1305.10	5468.00	1305.30	5476.00
GR	1305.30	5479.00								
X1	4579.00	105.00	4935.00	5068.00	241.00	245.00	245.00	0.00	0.00	0.00
GR	1268.90	4920.00	1268.80	4921.00	1268.60	4923.00	1268.30	4924.00	1267.80	4926.00
GR	1264.80	4932.00	1263.30	4935.00	1262.80	4941.00	1262.70	4943.00	1262.60	4944.00
GR	1262.60	4947.00	1262.30	4956.00	1262.30	4957.00	1262.10	4962.00	1261.70	4971.00
GR	1261.20	4976.00	1261.00	4977.00	1260.60	4978.00	1259.90	4982.00	1259.90	4984.00
GR	1259.90	4986.00	1260.00	4987.00	1260.10	4989.00	1260.00	4990.00	1259.90	4990.00

GR	1260.00	4994.00	1260.10	4995.00	1260.10	4996.00	1260.20	4998.00	1260.60	5001.00
GR	1260.50	5006.00	1260.60	5008.00	1260.50	5012.00	1260.40	5015.00	1260.40	5016.00
GR	1260.50	5019.00	1260.50	5020.00	1260.40	5022.00	1260.20	5024.00	1260.00	5026.00
GR	1260.00	5030.00	1260.00	5032.00	1259.70	5037.00	1259.80	5040.00	1259.90	5041.00
GR	1259.90	5050.00	1259.90	5051.00	1260.10	5058.00	1262.50	5065.00	1263.30	5068.00
GR	1263.60	5074.00	1263.80	5088.00	1263.80	5089.00	1263.80	5090.00	1264.00	5105.00
GR	1264.10	5111.00	1264.20	5117.00	1263.70	5122.00	1263.50	5126.00	1263.70	5130.00
GR	1264.30	5138.00	1264.40	5143.00	1264.40	5145.00	1264.40	5148.00	1264.10	5154.00
GR	1264.50	5156.00	1265.40	5160.00	1265.60	5165.00	1265.70	5167.00	1265.40	5168.00
GR	1266.10	5169.00	1267.40	5171.00	1267.20	5173.00	1267.40	5176.00	1267.50	5177.00
GR	1267.50	5178.00	1267.80	5180.00	1268.50	5184.00	1268.30	5185.00	1268.60	5187.00
GR	1269.30	5190.00	1269.70	5193.00	1269.90	5195.00	1270.80	5198.00	1271.90	5200.00
GR	1273.10	5204.00	1273.90	5206.00	1274.50	5207.00	1274.80	5208.00	1275.60	5210.00
GR	1276.80	5212.00	1277.20	5213.00	1278.20	5215.00	1279.30	5217.00	1281.90	5221.00
GR	1282.90	5223.00	1284.80	5227.00	1286.30	5230.00	1287.80	5233.00	1289.60	5236.00
GR	1291.30	5239.00	1293.90	5242.00	1294.70	5244.00	1296.30	5246.00	1298.00	5248.00
X1	4974.00	112.00	4919.00	5010.00	394.00	396.00	395.00	0.00	0.00	0.00
GR	1272.90	4868.00	1272.80	4869.00	1272.50	4872.00	1272.50	4875.00	1272.60	4876.00
GR	1272.60	4877.00	1272.60	4882.00	1272.20	4884.00	1272.30	4885.00	1272.20	4887.00
GR	1271.80	4890.00	1271.10	4893.00	1270.10	4895.00	1270.60	4899.00	1270.70	4900.00
GR	1270.80	4904.00	1271.30	4909.00	1271.20	4910.00	1269.90	4913.00	1267.50	4919.00
GR	1267.20	4920.00	1267.00	4921.00	1266.40	4923.00	1265.90	4927.00	1265.80	4929.00
GR	1265.70	4930.00	1265.70	4933.00	1265.70	4935.00	1265.70	4936.00	1265.40	4939.00
GR	1265.20	4942.00	1265.00	4947.00	1265.00	4950.00	1264.80	4953.00	1264.90	4955.00
GR	1264.90	4956.00	1265.00	4963.00	1265.20	4965.00	1265.20	4970.00	1265.20	4971.00
GR	1265.20	4972.00	1265.10	4974.00	1265.00	4976.00	1264.90	4977.00	1264.80	4980.00
GR	1264.70	4981.00	1264.60	4986.00	1264.60	4988.00	1264.60	4989.00	1264.70	4993.00
GR	1264.80	4994.00	1264.80	4996.00	1264.90	4998.00	1264.80	5002.00	1263.90	5002.00
GR	1263.90	5007.00	1264.70	5008.00	1265.50	5009.00	1267.20	5010.00	1268.60	5011.00
GR	1268.80	5012.00	1269.00	5014.00	1269.60	5017.00	1269.80	5023.00	1269.80	5024.00
GR	1268.80	5028.00	1268.10	5031.00	1268.00	5032.00	1267.60	5036.00	1267.30	5038.00
GR	1266.30	5045.00	1266.20	5046.00	1266.20	5048.00	1266.40	5053.00	1266.50	5054.00
GR	1266.60	5055.00	1267.00	5058.00	1267.00	5060.00	1267.10	5062.00	1267.50	5063.00
GR	1267.90	5065.00	1267.90	5066.00	1268.10	5070.00	1268.20	5072.00	1268.40	5074.00
GR	1268.60	5076.00	1269.10	5078.00	1269.70	5082.00	1269.90	5083.00	1270.20	5084.00
GR	1270.90	5087.00	1271.10	5088.00	1271.40	5089.00	1279.20	5096.00	1282.70	5101.00
GR	1283.30	5102.00	1286.60	5106.00	1287.00	5107.00	1288.90	5110.00	1289.30	5111.00
GR	1291.10	5114.00	1291.90	5116.00	1293.20	5117.00	1297.70	5121.00	1300.10	5124.00
GR	1304.20	5127.00	1309.20	5132.00	1314.10	5135.00	1315.20	5136.00	1316.00	5137.00
GR	1320.20	5139.00	1322.90	5140.00						
X1	5474.00	162.00	4976.00	5027.00	487.00	512.00	500.00	0.00	0.00	0.00
GR	1277.30	4967.00	1277.70	4971.00	1277.70	4976.00	1276.30	4979.00	1273.70	4983.00
GR	1271.60	4985.00	1270.50	4989.00	1270.30	4990.00	1270.40	4993.00	1270.10	4995.00
GR	1270.50	5005.00	1270.50	5006.00	1271.60	5016.00	1273.50	5020.00	1276.10	5025.00
GR	1276.20	5026.00	1276.80	5027.00	1276.80	5029.00	1276.90	5031.00	1276.90	5033.00
GR	1277.00	5035.00	1277.50	5038.00	1277.60	5039.00	1277.30	5042.00	1277.40	5043.00
GR	1277.30	5048.00	1277.60	5050.00	1277.60	5051.00	1277.70	5053.00	1277.60	5056.00
GR	1277.40	5058.00	1277.90	5063.00	1277.80	5064.00	1277.60	5066.00	1277.50	5067.00
GR	1277.50	5068.00	1277.50	5074.00	1277.50	5075.00	1277.40	5081.00	1277.30	5086.00
GR	1277.30	5087.00	1277.40	5092.00	1277.30	5094.00	1277.20	5098.00	1277.20	5099.00
GR	1277.20	5101.00	1277.40	5108.00	1277.40	5109.00	1277.30	5110.00	1277.40	5111.00
GR	1277.50	5113.00	1277.60	5116.00	1277.70	5117.00	1277.60	5119.00	1277.40	5123.00
GR	1277.60	5124.00	1277.70	5126.00	1277.60	5129.00	1277.40	5131.00	1277.50	5136.00
GR	1277.50	5138.00	1277.40	5141.00	1277.30	5142.00	1277.30	5145.00	1277.20	5148.00
GR	1277.40	5153.00	1277.40	5154.00	1277.40	5155.00	1277.20	5159.00	1277.20	5161.00
GR	1277.00	5165.00	1277.20	5167.00	1277.40	5171.00	1277.30	5172.00	1277.40	5173.00
GR	1277.10	5177.00	1276.90	5180.00	1276.70	5183.00	1276.80	5184.00	1276.70	5185.00
GR	1276.60	5188.00	1276.70	5190.00	1276.70	5191.00	1276.60	5193.00	1276.40	5196.00
GR	1276.30	5198.00	1276.40	5202.00	1276.30	5205.00	1276.30	5206.00	1276.30	5207.00
GR	1276.30	5209.00	1276.30	5216.00	1276.80	5225.00	1276.90	5233.00	1277.10	5242.00
GR	1276.50	5244.00	1276.30	5247.00	1276.20	5255.00	1276.40	5257.00	1276.20	5260.00
GR	1276.50	5263.00	1276.70	5265.00	1276.90	5268.00	1276.90	5269.00	1276.70	5272.00
GR	1276.80	5277.00	1276.80	5278.00	1276.90	5280.00	1277.00	5283.00	1277.10	5285.00
GR	1277.10	5287.00	1277.20	5291.00	1277.00	5295.00	1276.90	5298.00	1276.90	5299.00
GR	1277.00	5300.00	1277.00	5301.00	1277.00	5303.00	1276.90	5305.00	1276.90	5307.00
GR	1277.20	5311.00	1277.20	5314.00	1277.20	5315.00	1277.20	5316.00	1277.20	5317.00
GR	1277.20	5318.00	1277.20	5322.00	1277.20	5324.00	1277.40	5329.00	1277.40	5330.00
GR	1277.50	5332.00	1277.50	5333.00	1277.60	5335.00	1277.70	5340.00	1277.80	5343.00
GR	1277.20	5345.00	1276.60	5346.00	1276.30	5348.00	1275.60	5348.00	1272.80	5355.00
GR	1271.40	5356.00	1270.10	5360.00	1270.10	5361.00	1270.40	5366.00	1270.60	5369.00
GR	1270.80	5371.00	1271.60	5372.00	1276.60	5376.00	1277.30	5380.00	1277.80	5384.00

```
GR  1278.00  5386.00  1279.20  5390.00  1279.20  5392.00  1280.40  5397.00  1281.10  5399.00
GR  1282.20  5402.00  1284.80  5406.00  1286.00  5408.00  1286.30  5409.00  1287.10  5410.00
GR  1293.40  5418.00  1293.50  5419.00
X1  5702.00   207.00  4984.00  5028.00   231.00   226.00   228.00     0.00     0.00     0.00
X3                                                                                       3.00
GR  1281.50  4966.00  1281.40  4967.00  1281.60  4969.00  1278.50  4984.00  1277.00  4985.00
GR  1275.50  4987.00  1273.50  4989.00  1273.00  4992.00  1272.70  4994.00  1271.30  4995.00
GR  1271.30  5004.00  1272.70  5007.00  1272.70  5008.00  1272.60  5009.00  1272.70  5013.00
GR  1272.80  5014.00  1273.20  5016.00  1273.80  5019.00  1275.40  5021.00  1277.00  5024.00
GR  1278.30  5026.00  1279.10  5028.00  1279.60  5033.00  1280.70  5036.00  1281.00  5040.00
GR  1281.10  5041.00  1281.10  5042.00  1281.10  5043.00  1281.00  5045.00  1280.70  5052.00
GR  1280.90  5054.00  1280.90  5055.00  1280.90  5056.00  1280.70  5060.00  1280.60  5061.00
GR  1280.50  5062.00  1280.60  5063.00  1280.90  5068.00  1280.80  5069.00  1280.80  5070.00
GR  1280.80  5071.00  1280.80  5072.00  1280.60  5075.00  1280.50  5079.00  1280.50  5080.00
GR  1280.70  5083.00  1280.50  5089.00  1280.50  5090.00  1280.70  5095.00  1280.40  5097.00
GR  1280.20  5099.00  1280.20  5102.00  1280.10  5108.00  1280.10  5109.00  1280.30  5114.00
GR  1280.20  5115.00  1280.10  5116.00  1280.10  5117.00  1279.80  5119.00  1279.80  5128.00
GR  1279.70  5135.00  1279.60  5139.00  1279.80  5145.00  1279.80  5150.00  1279.50  5169.75
GR  1279.20  5189.50  1278.90  5209.25  1278.60  5229.00  1278.60  5234.00  1278.60  5235.00
GR  1278.60  5236.00  1278.60  5239.00  1279.20  5248.00  1279.90  5250.00  1279.90  5251.00
GR  1279.20  5258.00  1279.30  5262.00  1279.30  5266.00  1278.90  5271.00  1278.80  5277.00
GR  1278.50  5280.00  1278.90  5286.00  1279.30  5288.00  1279.60  5296.00  1279.70  5300.00
GR  1279.80  5304.00  1279.90  5305.00  1280.00  5308.00  1280.00  5309.00  1280.00  5313.00
GR  1279.90  5316.00  1279.90  5317.00  1279.90  5320.00  1279.90  5322.00  1280.40  5325.00
GR  1280.00  5328.00  1279.90  5329.00  1279.80  5333.00  1280.40  5336.00  1280.10  5347.00
GR  1279.90  5354.00  1279.50  5362.00  1279.60  5364.00  1279.50  5369.00  1279.60  5370.00
GR  1279.70  5372.00  1279.80  5374.00  1279.80  5375.00  1278.60  5378.00  1278.80  5381.00
GR  1279.40  5385.00  1279.30  5389.00  1279.30  5390.00  1279.10  5394.00  1279.20  5397.00
GR  1279.00  5400.00  1279.00  5401.00  1279.10  5407.00  1279.10  5410.00  1279.10  5411.00
GR  1279.10  5413.00  1279.20  5417.00  1279.40  5420.00  1279.40  5421.00  1279.40  5424.00
GR  1279.50  5426.00  1279.70  5428.00  1279.70  5429.00  1279.20  5435.00  1279.30  5436.00
GR  1279.80  5443.00  1279.40  5447.00  1279.10  5453.00  1279.30  5461.00  1273.90  5466.00
GR  1272.10  5468.00  1272.00  5469.00  1271.70  5472.00  1271.30  5481.00  1272.40  5483.00
GR  1272.60  5484.00  1277.10  5493.00  1278.50  5497.00  1278.80  5498.00  1278.90  5499.00
GR  1278.90  5504.00  1278.90  5506.00  1278.80  5507.00  1279.00  5511.00  1279.00  5512.00
GR  1279.20  5514.00  1278.90  5516.00  1278.90  5519.00  1279.00  5520.00  1279.00  5522.00
GR  1278.90  5523.00  1278.90  5525.00  1278.80  5529.00  1278.90  5534.00  1278.90  5541.00
GR  1278.80  5545.00  1278.60  5547.00  1278.90  5549.00  1279.10  5551.00  1279.70  5554.00
GR  1279.90  5557.00  1280.00  5560.00  1286.10  5568.00  1288.50  5571.00  1291.00  5573.00
GR  1291.40  5574.00  1293.80  5579.00  1295.70  5581.00  1298.40  5586.00  1302.30  5591.00
GR  1303.80  5592.00  1304.50  5594.00  1305.30  5595.00  1308.40  5599.00  1308.50  5600.00
GR  1309.30  5601.00  1310.80  5603.00  1311.10  5603.00  1314.60  5610.00  1315.70  5612.00
GR  1316.40  5614.00  1316.90  5616.00  1317.30  5617.00  1318.30  5619.00  1324.20  5628.00
GR  1325.10  5629.00  1326.30  5632.00  1328.80  5637.00  1331.80  5644.00  1332.10  5645.00
GR  1332.90  5646.00  1335.10  5650.00  1336.30  5651.00  1336.50  5652.00  1338.90  5658.00
GR  1339.90  5660.00  1342.20  5665.00  1343.50  5668.00  1344.80  5671.00  1347.60  5676.00
GR  1348.30  5677.00  1349.00  5681.00  1349.50  5683.00  1350.10  5684.00  1351.40  5687.00
X1  5930.00   308.00  4981.00  5042.00   231.00   224.00   228.00     0.00     0.00     0.00
X3                                                                                       2.00
GR  1282.40  4938.00  1282.00  4950.50  1281.60  4963.00  1281.50  4971.00  1281.40  4981.00
GR  1279.80  4985.00  1278.40  4989.00  1276.00  4993.00  1275.80  5000.00  1275.10  5007.00
GR  1274.50  5010.00  1274.50  5019.00  1275.40  5021.00  1275.80  5022.00  1277.50  5026.00
GR  1279.40  5029.00  1279.80  5030.00  1280.60  5032.00  1282.00  5039.00  1282.20  5042.00
GR  1282.80  5055.00  1283.60  5059.00  1283.30  5068.00  1282.80  5075.00  1282.80  5078.00
GR  1282.80  5082.00  1282.90  5086.00  1283.10  5087.00  1283.30  5089.00  1283.40  5091.00
GR  1282.80  5096.00  1282.80  5102.00  1282.90  5109.00  1282.60  5110.00  1282.80  5111.00
GR  1282.20  5116.00  1282.40  5123.00  1281.50  5143.00  1281.30  5146.00  1281.90  5156.00
GR  1282.00  5157.00  1282.20  5159.00  1282.10  5163.00  1282.10  5165.00  1281.60  5170.00
GR  1282.10  5186.00  1282.00  5199.00  1282.80  5207.00  1282.80  5209.00  1282.80  5211.00
GR  1282.60  5216.00  1282.70  5218.00  1282.40  5219.00  1282.60  5221.00  1282.80  5223.00
GR  1282.70  5225.00  1282.60  5226.00  1281.80  5230.00  1281.70  5234.00  1281.50  5236.00
GR  1281.20  5238.00  1281.40  5239.00  1281.40  5240.00  1281.30  5244.00  1281.30  5247.00
GR  1281.50  5249.00  1281.50  5252.00  1281.30  5253.00  1281.20  5255.00  1281.20  5260.00
GR  1281.30  5262.00  1281.30  5263.00  1281.20  5264.00  1281.60  5270.00  1281.30  5272.00
GR  1281.40  5276.00  1281.50  5279.00  1281.50  5280.00  1281.90  5283.00  1281.90  5284.00
GR  1281.90  5285.00  1281.90  5287.00  1281.70  5292.00  1281.80  5294.00  1281.80  5295.00
GR  1282.00  5298.00  1282.10  5299.00  1282.20  5300.00  1281.80  5304.00  1281.90  5305.00
GR  1282.00  5308.00  1282.20  5309.00  1282.10  5311.00  1282.20  5313.00  1282.30  5316.00
GR  1282.30  5319.00  1282.20  5320.00  1282.20  5323.00  1282.20  5325.00  1282.40  5328.00
GR  1282.30  5329.00  1282.20  5330.00  1282.30  5331.00  1282.20  5332.00  1282.20  5335.00
GR  1282.30  5341.00  1282.40  5344.00  1282.30  5345.00  1282.20  5348.00  1282.30  5350.00
```

GR	1282.10	5355.00	1282.10	5356.00	1282.20	5359.00	1282.10	5360.00	1282.00	5361.00
GR	1282.40	5366.00	1282.30	5368.00	1282.50	5371.00	1282.50	5372.00	1282.30	5378.00
GR	1282.10	5381.00	1281.90	5382.00	1281.90	5384.00	1281.70	5391.00	1281.70	5392.00
GR	1281.70	5396.00	1281.60	5398.00	1281.60	5402.00	1280.80	5416.00	1280.90	5421.00
GR	1281.50	5424.00	1281.70	5428.00	1281.80	5429.00	1281.10	5432.00	1281.90	5433.00
GR	1282.50	5444.00	1282.70	5448.00	1282.70	5450.00	1282.90	5456.00	1282.80	5461.00
GR	1283.20	5472.00	1283.20	5475.00	1283.10	5486.00	1282.70	5505.00	1283.15	5523.50
GR	1283.60	5542.00	1283.60	5543.00	1283.00	5549.00	1282.80	5550.00	1282.80	5551.00
GR	1282.70	5556.00	1282.70	5557.00	1282.70	5558.00	1282.50	5560.00	1282.40	5562.00
GR	1282.30	5567.00	1282.30	5568.00	1282.40	5573.00	1282.20	5574.00	1282.20	5575.00
GR	1282.40	5579.00	1282.30	5582.00	1282.40	5585.00	1282.40	5586.00	1282.30	5588.00
GR	1282.20	5590.00	1281.80	5592.00	1281.80	5594.00	1281.60	5596.00	1281.50	5598.00
GR	1281.40	5599.00	1282.30	5601.00	1282.20	5607.00	1281.40	5616.00	1281.30	5621.00
GR	1281.30	5629.00	1281.40	5633.00	1281.80	5635.00	1281.50	5645.00	1281.50	5648.00
GR	1280.90	5657.00	1277.70	5664.00	1275.70	5666.00	1275.60	5667.00	1275.70	5668.00
GR	1275.60	5669.00	1275.50	5673.00	1278.40	5682.00	1282.20	5692.00	1282.40	5694.00
GR	1282.90	5701.00	1283.10	5703.00	1283.10	5705.00	1282.90	5711.00	1283.10	5718.00
GR	1283.90	5720.00	1283.30	5724.00	1283.20	5725.00	1283.00	5727.00	1283.30	5728.00
GR	1283.20	5732.00	1282.60	5745.00	1282.30	5759.00	1282.30	5760.00	1282.40	5761.00
GR	1283.30	5777.00	1283.10	5784.00	1283.00	5786.00	1283.20	5787.00	1283.20	5791.00
GR	1283.30	5795.00	1283.40	5798.00	1283.30	5802.00	1283.20	5805.00	1283.70	5807.00
GR	1284.10	5809.00	1283.90	5813.00	1283.80	5815.00	1283.80	5817.00	1283.70	5820.00
GR	1283.60	5823.00	1283.70	5827.00	1283.70	5830.00	1283.70	5832.00	1283.90	5836.00
GR	1283.90	5837.00	1283.80	5840.00	1283.80	5844.00	1283.70	5845.00	1283.80	5847.00
GR	1283.90	5852.00	1283.90	5853.00	1283.80	5855.00	1283.70	5857.00	1283.70	5858.00
GR	1283.70	5863.00	1283.70	5864.00	1283.60	5869.00	1283.60	5870.00	1283.90	5872.00
GR	1283.90	5876.00	1283.70	5882.00	1283.70	5883.00	1284.10	5886.00	1284.00	5889.00
GR	1284.00	5891.00	1284.00	5892.00	1284.00	5893.00	1284.20	5895.00	1284.20	5899.00
GR	1284.40	5903.00	1284.40	5904.00	1284.20	5908.00	1284.10	5912.00	1284.10	5915.00
GR	1284.20	5917.00	1284.20	5919.00	1284.30	5922.00	1283.90	5924.00	1283.80	5926.00
GR	1283.80	5927.00	1284.10	5931.00	1284.10	5934.00	1284.20	5935.00	1284.30	5938.00
GR	1284.40	5939.00	1284.70	5943.00	1284.70	5949.00	1284.70	5950.00	1284.80	5954.00
GR	1284.90	5957.00	1285.00	5958.00	1285.10	5959.00	1285.00	5962.00	1284.90	5964.00
GR	1284.80	5966.00	1285.10	5970.00	1285.00	5971.00	1285.00	5974.00	1285.00	5977.00
GR	1285.00	5977.00	1285.00	5978.00	1285.10	5984.00	1285.20	5988.00	1285.10	5990.00
GR	1285.10	5993.00	1285.20	5998.00	1285.10	5999.00	1285.10	6001.00	1285.20	6004.00
GR	1285.20	6005.00	1285.10	6009.00	1285.00	6010.00	1285.00	6014.00	1285.40	6019.00
GR	1285.60	6020.00	1286.50	6022.00	1286.70	6023.00	1286.80	6024.00	1287.60	6026.00
GR	1287.60	6028.00	1288.30	6032.00	1290.70	6038.00	1291.00	6039.00	1291.10	6039.00
GR	1291.80	6041.00	1292.80	6044.00	1296.70	6053.00	1297.90	6056.00	1300.40	6061.00
X1	6083.00	401.00	4982.00	5018.00	154.00	152.00	153.00	0.00	0.00	0.00
X3										3.00
GR	1284.00	4933.00	1283.90	4936.00	1284.00	4947.00	1284.10	4958.00	1284.20	4962.00
GR	1284.20	4965.00	1284.10	4969.00	1284.30	4971.00	1283.80	4977.00	1283.70	4982.00
GR	1282.40	4985.00	1281.80	4987.00	1276.70	4991.00	1276.10	4995.00	1276.10	5005.00
GR	1276.60	5007.00	1277.20	5013.00	1280.50	5015.00	1282.50	5016.00	1282.90	5018.00
GR	1283.10	5024.00	1285.30	5038.00	1285.30	5039.00	1284.50	5046.00	1284.80	5055.00
GR	1284.60	5062.00	1284.70	5064.00	1284.50	5068.00	1284.40	5071.00	1284.40	5072.00
GR	1284.50	5080.00	1284.60	5085.00	1284.60	5087.00	1284.80	5107.00	1284.70	5109.00
GR	1284.80	5111.00	1284.90	5114.00	1284.70	5123.00	1284.50	5125.00	1284.60	5128.00
GR	1284.70	5129.00	1284.70	5130.00	1284.50	5136.00	1284.40	5137.00	1284.30	5138.00
GR	1284.80	5143.00	1284.80	5144.00	1284.90	5145.00	1285.50	5157.00	1285.10	5160.00
GR	1284.30	5166.00	1284.20	5168.00	1284.20	5169.00	1284.10	5170.00	1284.10	5172.00
GR	1284.10	5173.00	1284.00	5174.00	1283.90	5176.00	1284.00	5178.00	1283.80	5179.00
GR	1283.90	5182.00	1283.80	5186.00	1284.00	5189.00	1283.30	5194.00	1283.60	5196.00
GR	1283.50	5198.00	1283.50	5201.00	1283.40	5205.00	1283.60	5206.00	1283.50	5207.00
GR	1283.60	5211.00	1283.50	5213.00	1283.40	5217.00	1283.40	5218.00	1283.40	5219.00
GR	1283.40	5221.00	1283.60	5228.00	1283.80	5231.00	1282.70	5234.00	1282.50	5235.00
GR	1283.10	5240.00	1283.20	5243.00	1283.30	5250.00	1283.80	5257.00	1284.10	5262.00
GR	1283.90	5271.00	1283.80	5272.00	1284.00	5279.00	1284.00	5283.00	1284.00	5286.00
GR	1284.00	5287.00	1284.30	5298.00	1284.80	5301.00	1284.90	5305.00	1285.00	5310.00
GR	1285.20	5312.00	1284.80	5314.00	1284.70	5316.00	1285.00	5317.00	1284.80	5320.00
GR	1284.10	5324.00	1283.90	5326.00	1283.90	5329.00	1283.80	5331.00	1283.10	5348.00
GR	1283.60	5350.00	1283.60	5351.00	1283.85	5362.00	1284.10	5373.00	1284.20	5374.00
GR	1285.00	5386.00	1284.90	5387.00	1284.60	5389.00	1283.60	5395.00	1283.70	5396.00
GR	1283.70	5397.00	1283.90	5398.00	1283.70	5401.00	1283.70	5403.00	1283.60	5407.00
GR	1283.80	5410.00	1284.10	5412.00	1284.20	5414.00	1284.10	5415.00	1284.10	5417.00
GR	1283.80	5421.00	1283.80	5422.00	1284.10	5426.00	1284.10	5427.00	1283.90	5427.00
GR	1283.90	5429.00	1284.00	5429.00	1284.00	5430.00	1284.10	5434.00	1283.80	5436.00
GR	1283.90	5439.00	1283.90	5443.00	1283.90	5444.00	1284.00	5445.00	1283.80	5448.00
GR	1283.80	5450.00	1284.00	5453.00	1284.10	5454.00	1283.90	5457.00	1284.20	5460.00

GR	1283.60	5465.00	1283.90	5469.00	1283.90	5470.00	1283.70	5472.00	1283.50	5476.00
GR	1283.40	5478.00	1283.30	5480.00	1283.30	5482.00	1284.10	5501.00	1284.10	5502.00
GR	1284.00	5505.00	1284.00	5507.00	1284.20	5513.00	1284.20	5515.00	1284.00	5516.00
GR	1284.20	5519.00	1283.90	5522.00	1284.10	5523.00	1283.80	5525.00	1283.50	5528.00
GR	1283.40	5529.00	1283.30	5542.00	1283.10	5545.00	1283.30	5552.00	1283.10	5554.00
GR	1282.90	5555.00	1283.10	5557.00	1282.60	5560.00	1283.00	5565.00	1283.80	5569.00
GR	1283.70	5570.00	1283.60	5571.00	1283.90	5578.00	1284.00	5581.00	1284.20	5585.00
GR	1284.50	5587.00	1284.60	5588.00	1284.30	5590.00	1284.70	5595.00	1284.80	5598.00
GR	1284.30	5599.00	1284.50	5601.00	1284.50	5602.00	1284.40	5605.00	1284.20	5606.00
GR	1284.20	5611.00	1284.30	5612.00	1284.30	5613.00	1284.30	5614.00	1284.40	5619.00
GR	1284.30	5623.00	1284.30	5624.00	1284.30	5626.00	1284.50	5631.00	1284.50	5634.00
GR	1284.50	5637.00	1284.50	5640.00	1284.20	5642.00	1284.30	5648.00	1284.30	5651.00
GR	1284.40	5653.00	1284.40	5654.00	1284.80	5661.00	1284.80	5663.00	1284.70	5666.00
GR	1284.70	5668.00	1284.50	5669.00	1284.40	5670.00	1284.40	5671.00	1284.20	5675.00
GR	1284.10	5678.00	1284.40	5684.00	1284.40	5687.00	1284.40	5689.00	1284.20	5693.00
GR	1284.10	5695.00	1284.10	5696.00	1284.40	5700.00	1284.40	5702.00	1284.50	5703.00
GR	1284.60	5706.00	1284.80	5708.00	1284.70	5710.00	1284.70	5712.00	1284.70	5713.00
GR	1284.30	5719.00	1284.30	5720.00	1284.20	5721.00	1284.00	5722.00	1283.90	5723.00
GR	1282.60	5733.00	1282.50	5736.00	1279.20	5739.00	1277.60	5740.00	1277.40	5744.00
GR	1277.30	5746.00	1277.30	5749.00	1277.20	5750.00	1277.80	5753.00	1278.40	5754.00
GR	1279.00	5758.00	1281.30	5761.00	1283.80	5766.00	1284.40	5771.00	1284.70	5772.00
GR	1284.70	5773.00	1284.80	5774.00	1284.80	5782.00	1284.70	5785.00	1284.50	5788.00
GR	1284.50	5789.00	1284.70	5793.00	1284.60	5797.00	1284.30	5798.00	1284.40	5806.00
GR	1284.50	5812.00	1284.40	5815.00	1284.70	5823.00	1284.60	5824.00	1284.90	5828.00
GR	1284.30	5830.00	1284.60	5842.00	1284.60	5843.00	1284.60	5844.00	1284.70	5845.00
GR	1285.00	5850.00	1284.80	5851.00	1285.00	5855.00	1285.00	5857.00	1284.90	5858.00
GR	1285.00	5859.00	1284.60	5861.00	1284.60	5862.00	1284.80	5863.00	1284.80	5869.00
GR	1284.80	5872.00	1284.70	5876.00	1284.70	5878.00	1284.60	5880.00	1284.60	5882.00
GR	1284.60	5884.00	1284.60	5886.00	1284.70	5888.00	1284.70	5893.00	1284.70	5894.00
GR	1284.80	5897.00	1285.00	5900.00	1284.90	5902.00	1284.80	5904.00	1284.80	5907.00
GR	1284.90	5909.00	1285.20	5910.00	1285.10	5915.00	1285.00	5916.00	1285.10	5921.00
GR	1285.10	5922.00	1285.20	5924.00	1285.00	5927.00	1285.20	5929.00	1285.30	5931.00
GR	1285.10	5933.00	1285.10	5937.00	1285.00	5939.00	1285.10	5944.00	1285.10	5947.00
GR	1285.00	5948.00	1285.00	5950.00	1284.80	5952.00	1284.90	5953.00	1285.70	5963.00
GR	1285.90	5973.00	1286.00	5975.00	1286.10	5978.00	1287.60	5982.00	1287.80	5984.00
GR	1287.20	6003.00	1287.90	6011.00	1287.00	6020.00	1287.00	6022.00	1286.80	6025.00
GR	1286.80	6026.00	1286.80	6027.00	1286.70	6029.00	1286.70	6030.00	1286.60	6032.00
GR	1286.40	6035.00	1286.50	6037.00	1286.30	6041.00	1286.30	6042.00	1286.30	6044.00
GR	1286.30	6053.00	1286.50	6058.00	1286.50	6061.00	1287.05	6075.00	1287.60	6089.00
GR	1287.60	6092.00	1286.70	6096.00	1286.60	6097.00	1291.00	6098.00	1291.00	6098.00
GR	1291.10	6098.00	1291.10	6100.00	1293.10	6103.00	1294.40	6105.00	1295.30	6107.00
GR	1297.20	6109.00	1300.40	6114.00	1302.70	6117.00	1305.90	6123.00	1306.90	6125.00
GR	1307.00	6125.00	1307.40	6126.00	1311.90	6133.00	1312.40	6134.00	1314.20	6137.00
GR	1314.20	6138.00	1316.50	6141.00	1317.70	6144.00	1317.80	6145.00	1318.10	6148.00
GR	1318.40	6151.00	1318.40	6152.00	1318.80	6153.00	1319.80	6158.00	1320.50	6159.00
GR	1321.60	6161.00	1324.90	6168.00	1325.60	6169.00	1326.80	6172.00	1327.50	6174.00
GR	1329.40	6180.00	1330.20	6182.00	1330.20	6183.00	1330.60	6189.00	1331.00	6191.00
GR	1331.30	6194.00	1331.80	6196.00	1331.60	6197.00	1331.90	6199.00	1332.00	6201.00
GR	1332.20	6204.00	1332.50	6207.00	1332.60	6208.00	1333.00	6211.00	1333.20	6214.00
GR	1333.20	6215.00	1333.40	6216.00	1333.90	6220.00	1334.40	6226.00	1334.50	6229.00
GR	1334.70	6232.00	1334.80	6234.00	1334.80	6239.00	1335.00	6241.00	1335.20	6244.00
GR	1334.60	6249.00	1334.40	6253.00	1333.90	6256.00	1334.30	6260.00		
X1	6350.00	385.00	4976.00	5039.00	273.00	261.00	267.00	0.00	0.00	0.00
X3										2.00
GR	1289.30	4887.00	1289.20	4890.00	1288.40	4895.00	1288.30	4904.00	1288.00	4914.00
GR	1288.10	4921.00	1287.90	4923.00	1287.10	4929.00	1286.80	4938.00	1286.60	4942.00
GR	1286.40	4947.00	1286.40	4948.00	1286.20	4952.00	1286.10	4965.00	1285.80	4976.00
GR	1282.60	4982.00	1281.60	4984.00	1279.50	4989.00	1279.40	4999.00	1279.00	5003.00
GR	1278.60	5005.00	1278.60	5014.00	1279.00	5017.00	1279.10	5019.00	1279.10	5022.00
GR	1280.80	5025.00	1281.90	5027.00	1283.10	5030.00	1286.30	5039.00	1287.10	5042.00
GR	1287.50	5045.00	1287.30	5049.00	1287.20	5059.00	1287.10	5063.00	1286.80	5082.00
GR	1287.00	5087.00	1287.20	5091.00	1287.00	5096.00	1287.00	5100.00	1287.00	5120.00
GR	1286.80	5127.00	1286.80	5130.00	1287.00	5134.00	1287.00	5146.00	1286.70	5147.00
GR	1286.40	5151.00	1286.70	5154.00	1286.60	5157.00	1286.70	5163.00	1286.10	5174.00
GR	1286.10	5175.00	1286.50	5179.00	1286.40	5180.00	1286.70	5182.00	1286.70	5184.00
GR	1286.80	5185.00	1286.80	5187.00	1286.90	5188.00	1287.00	5189.00	1286.40	5193.00
GR	1286.80	5203.00	1286.80	5204.00	1286.40	5205.00	1286.50	5207.00	1286.50	5210.00
GR	1286.70	5214.00	1286.80	5215.00	1286.70	5216.00	1286.80	5217.00	1286.80	5219.00
GR	1286.70	5220.00	1286.80	5224.00	1287.00	5226.00	1286.90	5227.00	1287.10	5229.00
GR	1287.00	5230.00	1286.90	5233.00	1287.00	5234.00	1287.10	5235.00	1287.20	5239.00
GR	1287.40	5241.00	1287.40	5243.00	1287.30	5247.00	1287.50	5251.00	1287.40	5252.00

GR	1287.30	5253.00	1287.10	5255.00	1287.20	5258.00	1287.10	5260.00	1287.20	5266.00
GR	1287.80	5270.00	1287.80	5271.00	1287.50	5275.00	1287.40	5277.00	1287.30	5280.00
GR	1287.00	5283.00	1287.30	5288.00	1287.40	5294.00	1287.40	5295.00	1288.00	5302.00
GR	1287.85	5316.50	1287.70	5331.00	1287.20	5335.00	1286.70	5342.00	1286.70	5346.00
GR	1286.70	5347.00	1286.60	5351.00	1286.90	5360.00	1286.90	5368.00	1287.10	5369.00
GR	1287.00	5371.00	1287.00	5372.00	1287.00	5373.00	1286.80	5377.00	1286.80	5387.00
GR	1286.80	5390.00	1286.75	5406.00	1286.70	5422.00	1286.80	5433.00	1286.70	5435.00
GR	1287.20	5441.00	1287.20	5443.00	1287.20	5446.00	1287.10	5453.00	1286.90	5458.00
GR	1287.00	5464.00	1286.90	5466.00	1286.80	5467.00	1286.80	5469.00	1286.50	5474.00
GR	1286.50	5477.00	1286.40	5481.00	1286.50	5482.00	1286.50	5484.00	1286.30	5487.00
GR	1286.40	5488.00	1286.40	5490.00	1286.20	5495.00	1285.90	5498.00	1285.80	5500.00
GR	1286.10	5503.00	1286.00	5506.00	1286.00	5507.00	1285.90	5509.00	1285.80	5511.00
GR	1285.80	5512.00	1285.40	5516.00	1285.40	5519.00	1285.60	5522.00	1285.50	5526.00
GR	1285.40	5527.00	1285.20	5529.00	1285.10	5530.00	1285.10	5532.00	1285.10	5536.00
GR	1285.00	5539.00	1285.10	5543.00	1285.20	5545.00	1285.40	5547.00	1285.30	5549.00
GR	1285.30	5551.00	1285.20	5553.00	1285.20	5554.00	1285.40	5558.00	1285.10	5561.00
GR	1285.10	5562.00	1285.20	5565.00	1285.20	5567.00	1285.30	5569.00	1285.20	5571.00
GR	1285.20	5574.00	1285.00	5578.00	1285.60	5584.00	1285.50	5586.00	1285.50	5587.00
GR	1285.70	5589.00	1285.90	5591.00	1286.00	5592.00	1285.90	5593.00	1285.50	5598.00
GR	1285.70	5599.00	1285.70	5601.00	1285.40	5605.00	1285.30	5607.00	1284.60	5614.00
GR	1284.60	5616.00	1284.80	5618.00	1285.30	5624.00	1285.20	5627.00	1285.20	5631.00
GR	1285.30	5632.00	1285.20	5636.00	1285.40	5638.00	1285.50	5639.00	1285.40	5641.00
GR	1285.50	5642.00	1285.50	5648.00	1285.60	5649.00	1285.50	5652.00	1285.80	5654.00
GR	1285.50	5656.00	1286.10	5661.00	1286.40	5663.00	1286.60	5664.00	1286.70	5665.00
GR	1287.20	5672.00	1287.20	5673.00	1287.20	5681.00	1287.80	5685.00	1287.50	5690.00
GR	1287.40	5691.00	1287.90	5697.00	1287.90	5698.00	1287.30	5701.00	1287.10	5704.00
GR	1287.90	5715.00	1287.80	5716.00	1287.00	5718.00	1287.10	5719.00	1286.90	5720.00
GR	1286.80	5724.00	1286.40	5727.00	1286.30	5729.00	1286.00	5732.00	1286.00	5733.00
GR	1285.70	5736.00	1285.40	5737.00	1284.70	5746.00	1283.30	5754.00	1283.20	5755.00
GR	1281.20	5757.00	1280.50	5759.00	1279.70	5762.00	1279.70	5763.00	1279.70	5765.00
GR	1279.10	5769.00	1279.30	5773.00	1282.50	5779.00	1283.80	5781.00	1285.10	5789.00
GR	1285.80	5794.00	1285.80	5797.00	1285.80	5799.00	1286.20	5804.00	1286.20	5805.00
GR	1286.30	5810.00	1286.40	5814.00	1286.40	5815.00	1286.20	5821.00	1286.20	5822.00
GR	1286.30	5825.00	1286.20	5830.00	1286.50	5832.00	1286.40	5838.00	1286.60	5842.00
GR	1286.60	5844.00	1286.50	5845.00	1286.60	5846.00	1287.00	5848.00	1286.60	5852.00
GR	1286.60	5853.00	1286.60	5854.00	1286.70	5857.00	1286.60	5861.00	1286.60	5864.00
GR	1286.50	5868.00	1286.60	5870.00	1286.60	5875.00	1286.60	5876.00	1286.60	5877.00
GR	1286.50	5881.00	1286.50	5883.00	1286.60	5885.00	1286.50	5887.00	1286.60	5888.00
GR	1286.30	5893.00	1286.40	5897.00	1286.70	5901.00	1286.50	5904.00	1286.50	5906.00
GR	1286.60	5911.00	1286.70	5913.00	1286.60	5920.00	1286.50	5924.00	1286.60	5925.00
GR	1286.60	5927.00	1286.60	5928.00	1286.60	5929.00	1286.70	5936.00	1286.70	5940.00
GR	1286.90	5948.00	1287.30	5955.00	1287.30	5956.00	1287.30	5957.00	1287.40	5959.00
GR	1287.40	5961.00	1287.20	5965.00	1287.10	5972.00	1287.10	5973.00	1287.50	5977.00
GR	1287.40	5980.00	1287.60	5982.00	1287.60	5984.00	1287.50	5989.00	1287.80	5995.00
GR	1287.60	5998.00	1287.60	6003.00	1287.60	6005.00	1287.70	6009.00	1287.70	6011.00
GR	1287.70	6012.00	1287.80	6015.00	1287.70	6022.00	1287.80	6025.00	1287.70	6027.00
GR	1287.70	6029.00	1287.60	6033.00	1287.80	6037.00	1287.80	6038.00	1287.90	6041.00
GR	1287.90	6043.00	1287.80	6044.00	1288.00	6050.00	1288.10	6053.00	1288.20	6054.00
GR	1288.20	6057.00	1288.30	6058.00	1288.20	6072.00	1288.30	6078.00	1288.20	6079.00
GR	1288.20	6085.00	1288.20	6092.00	1288.20	6099.00	1288.60	6105.00	1288.50	6107.00
GR	1288.60	6109.00	1288.60	6111.00	1288.60	6113.00	1288.40	6116.00	1288.40	6118.00
GR	1288.40	6120.00	1288.40	6126.00	1288.40	6127.00	1288.70	6131.00	1288.90	6136.00
GR	1288.80	6138.00	1288.80	6140.00	1289.00	6141.00	1288.90	6145.00	1289.00	6146.00
GR	1289.20	6148.00	1289.20	6149.00	1289.00	6157.00	1289.00	6158.00	1288.70	6162.00
GR	1289.20	6166.00	1289.10	6173.00	1289.90	6189.00	1290.40	6193.00	1290.80	6201.00
GR	1290.40	6202.00	1290.10	6206.00	1290.60	6211.00	1290.60	6213.00	1290.50	6216.00
GR	1290.50	6217.00	1290.70	6219.00	1291.30	6221.00	1291.20	6224.00	1291.40	6225.00
GR	1292.50	6245.00	1292.90	6248.00	1293.20	6253.00	1293.20	6255.00	1293.30	6260.00
GR	1293.90	6265.00	1293.90	6266.00	1293.80	6269.00	1293.90	6270.00	1294.20	6272.00
GR	1295.00	6278.00	1295.00	6283.00	1294.90	6285.00	1295.20	6289.00	1295.50	6292.00
GR	1296.20	6295.00	1296.30	6297.00						
X1	6406.00	396.00	4933.00	5072.00	59.00	55.00	56.00	0.00	0.00	0.00
X3										2.00
GR	1286.60	4922.00	1286.60	4925.00	1286.60	4929.00	1286.40	4933.00	1285.80	4940.00
GR	1284.90	4950.00	1284.90	4951.00	1284.00	4958.00	1283.30	4967.00	1282.90	4970.00
GR	1282.40	4975.00	1281.90	4979.00	1281.40	4983.00	1280.80	4989.00	1280.80	4991.00
GR	1280.40	4995.00	1280.40	5005.00	1280.60	5007.00	1280.60	5009.00	1280.70	5015.00
GR	1281.10	5018.00	1281.60	5023.00	1281.90	5025.00	1282.60	5029.00	1282.80	5032.00
GR	1283.50	5039.00	1283.50	5040.00	1283.70	5041.00	1284.40	5048.00	1285.30	5056.00
GR	1285.50	5059.00	1285.90	5064.00	1286.10	5068.00	1286.30	5072.00	1286.50	5078.00
GR	1286.50	5080.00	1286.60	5087.00	1286.70	5097.00	1286.80	5098.00	1287.10	5106.00

GR	1287.00	5111.00	1287.10	5115.00	1287.10	5118.00	1287.20	5125.00	1287.10	5127.00
GR	1287.10	5135.00	1287.00	5143.00	1287.30	5151.00	1287.60	5158.00	1286.80	5159.00
GR	1286.70	5160.00	1287.30	5166.00	1287.40	5169.00	1287.40	5170.00	1286.50	5174.00
GR	1286.50	5175.00	1287.30	5186.00	1287.70	5189.00	1287.60	5191.00	1287.70	5192.00
GR	1287.80	5193.00	1287.50	5194.00	1287.90	5202.00	1287.60	5207.00	1287.70	5213.00
GR	1287.30	5223.50	1286.90	5234.00	1286.70	5241.00	1286.60	5242.00	1286.50	5250.00
GR	1286.80	5255.00	1286.90	5261.00	1287.10	5267.00	1288.10	5272.00	1288.20	5273.00
GR	1288.20	5274.00	1287.00	5282.00	1287.40	5284.00	1288.00	5288.00	1288.70	5292.00
GR	1288.40	5299.00	1288.20	5309.00	1288.30	5310.00	1288.20	5311.00	1288.20	5312.00
GR	1288.20	5315.00	1288.20	5317.00	1287.70	5322.00	1287.70	5326.00	1287.60	5343.00
GR	1287.40	5350.00	1287.50	5351.00	1287.50	5352.00	1287.50	5353.00	1287.40	5354.00
GR	1287.50	5360.00	1287.40	5362.00	1287.40	5363.00	1287.20	5368.00	1287.20	5372.00
GR	1287.30	5373.00	1287.20	5374.00	1287.10	5376.00	1287.60	5382.00	1287.30	5386.00
GR	1287.30	5387.00	1287.70	5389.00	1287.50	5392.00	1287.60	5395.00	1287.30	5397.00
GR	1287.30	5398.00	1287.20	5400.00	1287.60	5401.00	1287.60	5405.00	1287.60	5406.00
GR	1287.50	5409.00	1287.50	5410.00	1287.50	5413.00	1287.50	5416.00	1287.50	5417.00
GR	1287.40	5418.00	1287.50	5421.00	1287.60	5423.00	1287.40	5425.00	1287.30	5426.00
GR	1287.30	5427.00	1287.30	5436.00	1287.40	5438.00	1287.50	5440.00	1287.60	5442.00
GR	1287.60	5443.00	1287.40	5445.00	1287.30	5447.00	1287.50	5450.00	1287.40	5453.00
GR	1287.80	5459.00	1287.70	5460.00	1287.10	5463.00	1287.10	5465.00	1287.00	5469.00
GR	1287.10	5470.00	1287.20	5476.00	1287.20	5477.00	1287.00	5478.00	1286.90	5479.00
GR	1287.00	5481.00	1286.80	5485.00	1286.80	5486.00	1286.30	5493.00	1285.90	5496.00
GR	1285.90	5497.00	1285.90	5498.00	1285.70	5500.00	1285.70	5502.00	1285.40	5507.00
GR	1285.40	5512.00	1285.40	5515.00	1285.40	5517.00	1284.80	5531.00	1284.80	5533.00
GR	1284.70	5534.00	1284.70	5535.00	1284.80	5536.00	1284.70	5550.00	1285.80	5554.00
GR	1286.10	5555.00	1286.10	5556.00	1286.20	5559.00	1286.00	5562.00	1286.20	5569.00
GR	1286.20	5572.00	1286.30	5575.00	1286.20	5582.00	1286.20	5583.00	1286.10	5584.00
GR	1286.10	5586.00	1285.80	5587.00	1286.10	5590.00	1286.00	5592.00	1285.90	5593.00
GR	1286.00	5596.00	1286.00	5603.00	1286.00	5604.00	1286.00	5604.00	1286.10	5606.00
GR	1286.20	5610.00	1286.00	5612.00	1285.80	5614.00	1285.80	5615.00	1285.80	5616.00
GR	1286.00	5620.00	1286.00	5622.00	1286.50	5626.00	1286.80	5628.00	1286.90	5629.00
GR	1287.20	5630.00	1287.50	5633.00	1287.60	5638.00	1287.70	5642.00	1287.70	5644.00
GR	1287.50	5647.00	1287.50	5648.00	1287.40	5650.00	1286.90	5661.00	1287.30	5662.00
GR	1287.80	5666.00	1287.60	5667.00	1287.70	5670.00	1287.70	5672.00	1287.70	5677.00
GR	1287.90	5686.00	1288.00	5691.00	1287.80	5705.00	1287.90	5720.00	1287.55	5732.00
GR	1287.20	5744.00	1287.60	5748.00	1287.30	5749.00	1287.20	5750.00	1287.20	5755.00
GR	1287.10	5760.00	1286.80	5764.00	1286.70	5766.00	1286.70	5771.00	1286.60	5772.00
GR	1286.50	5773.00	1286.30	5775.00	1286.00	5776.00	1284.40	5783.00	1284.20	5784.00
GR	1283.40	5785.00	1282.10	5787.00	1281.90	5787.00	1281.60	5805.00	1282.80	5808.00
GR	1283.10	5808.00	1283.30	5811.00	1283.50	5812.00	1283.50	5813.00	1284.30	5818.00
GR	1284.90	5821.00	1285.20	5822.00	1285.30	5824.00	1285.50	5827.00	1286.30	5835.00
GR	1286.90	5840.00	1286.80	5841.00	1286.80	5842.00	1286.60	5844.00	1287.00	5849.00
GR	1286.90	5851.00	1286.70	5857.00	1286.90	5860.00	1286.90	5861.00	1286.70	5865.00
GR	1286.70	5869.00	1286.70	5874.00	1287.10	5877.00	1287.00	5881.00	1287.10	5882.00
GR	1287.10	5884.00	1287.20	5887.00	1287.10	5890.00	1287.20	5892.00	1287.30	5894.00
GR	1287.30	5895.00	1287.00	5899.00	1287.10	5900.00	1287.10	5903.00	1287.00	5904.00
GR	1287.00	5906.00	1287.10	5910.00	1287.20	5913.00	1287.30	5915.00	1287.20	5920.00
GR	1287.00	5923.00	1287.20	5925.00	1287.40	5927.00	1287.40	5928.00	1287.60	5932.00
GR	1287.50	5934.00	1287.40	5935.00	1287.50	5937.00	1287.40	5939.00	1287.30	5940.00
GR	1287.20	5941.00	1287.10	5943.00	1287.30	5948.00	1287.30	5949.00	1287.60	5954.00
GR	1287.60	5955.00	1287.60	5957.00	1287.70	5958.00	1287.70	5959.00	1287.60	5964.00
GR	1287.60	5967.00	1287.80	5971.00	1287.90	5973.00	1287.80	5975.00	1288.00	5977.00
GR	1288.10	5980.00	1288.00	5983.00	1288.20	5987.00	1288.20	5990.00	1288.30	5991.00
GR	1288.60	5993.00	1288.60	5999.00	1288.60	6007.00	1288.60	6011.00	1288.40	6013.00
GR	1288.40	6014.00	1288.30	6018.00	1288.40	6022.00	1288.50	6031.00	1288.50	6032.00
GR	1288.50	6035.00	1288.50	6036.00	1288.30	6039.00	1288.30	6040.00	1288.60	6044.00
GR	1288.60	6045.00	1288.70	6047.00	1288.90	6051.00	1288.80	6052.00	1289.00	6055.00
GR	1288.90	6057.00	1288.70	6061.00	1288.70	6063.00	1288.80	6068.00	1289.10	6069.00
GR	1289.20	6071.00	1289.10	6076.00	1289.20	6078.00	1289.00	6080.00	1289.10	6083.00
GR	1288.90	6086.00	1289.00	6089.00	1289.10	6091.00	1289.10	6092.00	1289.10	6095.00
GR	1289.10	6097.00	1289.20	6101.00	1289.20	6103.00	1289.30	6106.00	1289.40	6107.00
GR	1289.30	6110.00	1289.30	6111.00	1289.20	6113.00	1289.30	6115.00	1289.30	6119.00
GR	1289.30	6121.00	1289.30	6123.00	1289.30	6124.00	1289.30	6126.00	1289.40	6130.00
GR	1289.20	6132.00	1289.20	6135.00	1289.20	6136.00	1289.30	6140.00	1289.30	6142.00
GR	1289.30	6146.00	1289.30	6148.00	1289.20	6151.00	1289.30	6153.00	1289.30	6157.00
GR	1289.30	6159.00	1289.40	6163.00	1289.70	6169.00	1289.70	6175.00	1289.90	6180.00
GR	1290.40	6182.00	1290.50	6183.00	1290.50	6184.00	1290.60	6186.00	1291.00	6189.00
GR	1291.10	6190.00	1291.10	6192.00	1291.70	6201.00	1291.90	6204.00	1292.00	6207.00
GR	1292.10	6210.00	1292.20	6211.00	1292.20	6212.00	1292.80	6217.00	1293.00	6219.00
GR	1293.00	6220.00	1292.60	6222.00	1292.60	6225.00	1293.50	6228.00	1293.70	6232.00
GR	1293.70	6236.00	1293.80	6237.00	1293.90	6239.00	1294.20	6244.00	1294.70	6249.00

GR	1295.00	6251.00	1295.40	6257.00	1295.60	6260.00				
X1	6463.00	295.00	4969.00	5028.00	54.00	60.00	57.00	0.00	0.00	0.00
GR	1288.60	4936.00	1288.70	4941.00	1288.70	4942.00	1288.80	4949.00	1288.80	4951.00
GR	1288.70	4952.00	1288.20	4960.00	1287.20	4968.00	1286.90	4969.00	1285.70	4975.00
GR	1281.70	4987.00	1281.50	4988.00	1280.70	4994.00	1280.80	5005.00	1280.70	5006.00
GR	1280.80	5009.00	1281.60	5016.00	1285.10	5024.00	1286.80	5028.00	1288.50	5032.00
GR	1288.60	5034.00	1288.80	5043.00	1288.80	5049.00	1288.80	5050.00	1289.10	5059.00
GR	1289.10	5060.00	1288.90	5067.00	1288.90	5069.00	1289.00	5072.00	1289.10	5074.00
GR	1289.20	5076.00	1289.10	5080.00	1289.10	5084.00	1289.20	5088.00	1289.10	5090.00
GR	1289.20	5097.00	1289.30	5113.00	1289.40	5121.00	1290.00	5137.00	1290.00	5137.00
GR	1289.90	5139.00	1289.90	5141.00	1289.80	5150.00	1289.70	5153.00	1289.50	5158.00
GR	1289.60	5161.00	1289.70	5169.00	1289.40	5172.00	1289.50	5177.00	1289.40	5191.00
GR	1289.90	5199.00	1289.70	5204.00	1289.70	5209.00	1290.10	5211.00	1290.00	5218.00
GR	1289.70	5225.00	1289.60	5230.00	1289.90	5241.00	1290.30	5249.00	1291.10	5257.00
GR	1291.20	5263.00	1291.10	5264.00	1291.00	5267.00	1291.00	5269.00	1290.30	5276.00
GR	1290.20	5280.00	1290.30	5291.00	1290.50	5293.00	1291.70	5311.00	1292.30	5316.00
GR	1291.90	5322.00	1291.90	5326.00	1291.80	5331.00	1291.90	5333.00	1291.80	5335.00
GR	1291.80	5338.00	1292.20	5343.00	1291.80	5349.00	1291.80	5352.00	1291.80	5353.00
GR	1291.10	5358.00	1290.80	5360.00	1291.20	5363.00	1291.30	5367.00	1291.10	5383.00
GR	1291.40	5386.00	1291.50	5388.00	1291.40	5391.00	1291.70	5397.00	1292.30	5400.00
GR	1292.20	5401.00	1292.40	5402.00	1292.00	5406.00	1291.80	5410.00	1291.70	5414.00
GR	1291.10	5418.00	1291.50	5426.00	1292.00	5432.00	1291.80	5433.00	1292.10	5440.00
GR	1292.40	5444.00	1292.70	5447.00	1292.90	5450.00	1292.60	5453.00	1292.70	5456.00
GR	1292.40	5462.00	1292.30	5464.00	1291.70	5471.00	1292.00	5474.00	1291.90	5475.00
GR	1291.80	5476.00	1291.30	5481.00	1290.70	5487.00	1290.80	5490.00	1290.60	5494.00
GR	1290.70	5496.00	1290.90	5498.00	1290.90	5499.00	1291.30	5504.00	1292.00	5506.00
GR	1293.20	5509.00	1293.20	5510.00	1293.40	5511.00	1293.60	5516.00	1293.90	5519.00
GR	1294.20	5520.00	1294.50	5522.00	1294.40	5524.00	1294.10	5527.00	1294.20	5528.00
GR	1294.10	5529.00	1293.40	5532.00	1293.20	5536.00	1293.10	5537.00	1293.20	5545.00
GR	1293.30	5546.00	1293.50	5550.00	1293.50	5552.00	1293.60	5556.00	1293.60	5557.00
GR	1293.50	5559.00	1293.40	5562.00	1293.50	5568.00	1293.70	5569.00	1293.50	5573.00
GR	1293.50	5574.00	1293.70	5578.00	1293.70	5580.00	1293.50	5582.00	1293.60	5584.00
GR	1293.70	5587.00	1293.80	5589.00	1293.90	5593.00	1293.90	5598.00	1294.20	5603.00
GR	1294.10	5606.00	1294.50	5616.00	1294.90	5636.00	1294.90	5638.00	1295.20	5639.00
GR	1295.10	5641.00	1295.10	5642.00	1295.10	5646.00	1295.20	5647.00	1295.60	5651.00
GR	1295.70	5652.00	1295.50	5658.00	1295.50	5659.00	1295.50	5660.00	1295.50	5664.00
GR	1295.20	5669.00	1295.10	5673.00	1295.30	5675.00	1295.60	5677.00	1295.60	5678.00
GR	1295.40	5684.00	1295.50	5685.00	1295.50	5686.00	1295.60	5688.00	1295.60	5689.00
GR	1295.70	5690.00	1295.80	5691.00	1295.80	5695.00	1295.70	5698.00	1295.80	5700.00
GR	1296.00	5703.00	1296.10	5704.00	1294.60	5711.00	1294.40	5713.00	1294.00	5716.00
GR	1294.00	5716.00	1294.10	5717.00	1293.90	5718.00	1294.00	5721.00	1293.90	5723.00
GR	1294.00	5725.00	1294.30	5727.00	1294.40	5729.00	1294.40	5730.00	1294.90	5738.00
GR	1295.60	5741.00	1295.80	5742.00	1296.10	5746.00	1296.30	5749.00	1296.60	5753.00
GR	1296.70	5754.00	1296.70	5755.00	1296.70	5756.00	1296.30	5759.00	1296.10	5760.00
GR	1296.10	5765.00	1296.10	5766.00	1296.40	5767.00	1296.70	5768.00	1296.30	5772.00
GR	1296.90	5777.00	1297.00	5779.00	1296.40	5782.00	1296.40	5783.00	1296.10	5785.00
GR	1296.20	5787.00	1296.60	5792.00	1296.60	5793.00	1297.10	5795.00	1296.90	5797.00
GR	1297.00	5801.00	1296.90	5806.00	1296.90	5807.00	1296.20	5811.00	1296.30	5814.00
GR	1296.20	5818.00	1296.40	5820.00	1296.70	5821.00	1296.10	5826.00	1296.10	5833.00
GR	1296.10	5836.00	1296.40	5845.00	1296.40	5846.00	1296.00	5852.00	1296.40	5856.00
GR	1296.40	5857.00	1296.40	5858.00	1296.30	5860.00	1296.30	5862.00	1296.60	5868.00
GR	1296.50	5873.00	1296.70	5880.00	1296.80	5883.00	1297.10	5891.00	1297.10	5895.00
GR	1297.10	5897.00	1297.00	5905.00	1297.00	5908.00	1297.20	5919.00	1297.30	5920.00
GR	1297.20	5921.00	1297.70	5933.00	1297.90	5942.00	1298.30	5944.00	1298.40	5946.00
GR	1298.40	5947.00	1297.60	5960.00	1297.20	5962.00	1298.40	5967.00	1298.90	5968.00
GR	1299.80	5969.00	1301.10	5971.00	1302.70	5973.00	1303.00	5977.00	1303.30	5983.00
GR	1303.60	5988.00	1303.70	5992.00	1304.00	6000.00	1303.80	6004.00	1303.80	6005.00
GR	1303.60	6010.00	1303.50	6018.00	1303.30	6020.00	1303.50	6022.00	1303.40	6031.00
GR	1303.70	6032.00	1304.00	6040.00	1304.70	6043.00	1305.10	6045.00	1306.10	6051.00
GR	1307.90	6054.00	1311.90	6061.00	1312.10	6062.00	1313.40	6066.00	1317.70	6079.00
GR	1320.50	6084.00	1321.30	6085.00	1322.30	6088.00	1326.70	6096.00	1327.70	6099.00
X1	6822.00	215.00	4976.00	5020.00	357.00	359.00	359.00	0.00	0.00	0.00
X3										3.00
GR	1294.20	4905.00	1294.20	4908.00	1294.20	4909.00	1294.00	4916.00	1294.10	4919.00
GR	1294.10	4925.00	1294.00	4932.00	1294.00	4934.00	1293.90	4939.00	1294.00	4943.00
GR	1293.80	4952.00	1293.60	4958.00	1293.80	4961.00	1293.30	4966.00	1293.10	4970.00
GR	1292.90	4971.00	1292.20	4974.00	1291.60	4976.00	1289.70	4980.00	1287.10	4983.00
GR	1284.10	4989.00	1284.10	4995.00	1284.10	5004.00	1284.90	5007.00	1285.50	5008.00
GR	1287.20	5012.00	1288.30	5014.00	1290.40	5019.00	1291.30	5020.00	1291.50	5025.00
GR	1292.00	5030.00	1292.30	5034.00	1292.70	5044.00	1293.00	5052.00	1293.00	5053.00
GR	1293.10	5055.00	1293.30	5065.00	1293.40	5071.00	1293.50	5073.00	1293.50	5074.00

GR	1294.00	5092.00	1294.30	5098.00	1294.90	5112.00	1295.10	5118.00	1294.50	5122.00
GR	1293.80	5132.00	1293.80	5139.00	1293.50	5145.00	1293.40	5150.00	1293.50	5151.00
GR	1293.50	5153.00	1293.70	5158.00	1293.40	5162.00	1293.30	5164.00	1293.20	5167.00
GR	1293.65	5177.50	1294.10	5188.00	1294.00	5196.00	1294.00	5208.00	1294.20	5215.00
GR	1294.10	5222.00	1294.20	5225.00	1294.20	5231.00	1294.10	5236.00	1294.10	5244.00
GR	1294.10	5245.00	1294.00	5254.00	1294.00	5256.00	1294.00	5262.00	1294.00	5266.00
GR	1293.80	5273.00	1293.60	5278.00	1293.40	5294.00	1293.90	5304.00	1294.50	5315.00
GR	1296.20	5321.00	1296.90	5324.00	1297.00	5328.00	1297.23	5347.00	1297.47	5366.00
GR	1297.70	5385.00	1297.70	5386.00	1297.70	5387.00	1297.70	5400.00	1297.70	5401.00
GR	1297.50	5407.00	1297.30	5415.00	1297.30	5421.00	1295.70	5425.00	1295.50	5426.00
GR	1295.30	5429.00	1295.50	5431.00	1295.20	5434.00	1294.70	5440.00	1294.90	5442.00
GR	1294.90	5444.00	1295.10	5445.00	1295.40	5454.00	1295.60	5459.00	1295.70	5462.00
GR	1295.60	5463.00	1295.50	5466.00	1295.60	5468.00	1295.80	5470.00	1295.70	5471.00
GR	1295.80	5476.00	1295.80	5477.00	1295.70	5479.00	1295.80	5483.00	1295.70	5485.00
GR	1295.00	5493.00	1294.80	5494.00	1294.80	5498.00	1294.80	5500.00	1294.80	5503.00
GR	1294.80	5507.00	1294.80	5508.00	1295.10	5513.00	1295.40	5515.00	1295.80	5517.00
GR	1296.20	5523.00	1296.20	5524.00	1296.90	5534.00	1296.90	5536.00	1297.10	5541.00
GR	1297.00	5545.00	1297.00	5547.00	1297.00	5550.00	1297.10	5553.00	1297.20	5554.00
GR	1297.30	5559.00	1297.30	5560.00	1297.30	5563.00	1297.40	5564.00	1297.60	5569.00
GR	1298.00	5570.00	1298.60	5573.00	1298.60	5576.00	1298.30	5579.00	1298.60	5580.00
GR	1298.70	5582.00	1298.60	5585.00	1298.50	5588.00	1298.50	5590.00	1298.60	5592.00
GR	1298.70	5597.00	1298.80	5599.00	1298.80	5603.00	1298.60	5606.00	1298.30	5609.00
GR	1298.30	5610.00	1298.20	5613.00	1298.10	5614.00	1297.80	5620.00	1297.70	5622.00
GR	1297.70	5624.00	1297.60	5629.00	1297.60	5630.00	1297.60	5631.00	1297.50	5637.00
GR	1297.40	5644.00	1297.40	5646.00	1297.60	5658.00	1297.90	5667.00	1298.30	5674.00
GR	1298.10	5681.00	1298.10	5682.00	1298.10	5683.00	1299.20	5702.00	1299.20	5703.00
GR	1298.50	5709.00	1298.80	5713.00	1298.80	5715.00	1298.70	5717.00	1298.80	5721.00
GR	1298.80	5726.00	1298.80	5727.00	1298.80	5728.00	1298.70	5743.00	1298.70	5744.00
GR	1298.70	5748.00	1298.80	5751.00	1299.60	5752.00	1302.70	5759.00	1303.20	5760.00
GR	1304.20	5766.00	1305.00	5774.00	1305.10	5776.00	1305.40	5781.00	1305.50	5784.00
GR	1305.50	5786.00	1305.90	5788.00	1305.30	5794.00	1305.50	5797.00	1305.60	5799.00
GR	1305.40	5801.00	1305.20	5804.00	1305.00	5808.00	1304.80	5814.00	1304.70	5815.00
GR	1304.80	5816.00	1305.30	5824.00	1305.60	5827.00	1307.20	5830.00	1308.30	5832.00
GR	1312.20	5837.00	1317.80	5848.00	1318.10	5848.00	1318.30	5849.00	1320.50	5853.00
GR	1321.40	5855.00	1321.50	5856.00	1321.60	5857.00	1322.10	5858.00	1323.40	5861.00
GR	1325.00	5865.00	1328.70	5874.00	1330.70	5877.00				
X1	7036.00	170.00	4976.00	5036.00	218.00	211.00	214.00	0.00	0.00	0.00
X3										2.00
GR	1297.80	4862.00	1297.80	4864.00	1297.70	4867.00	1297.65	4877.50	1297.60	4888.00
GR	1297.60	4890.00	1297.50	4893.00	1296.80	4901.00	1297.20	4911.00	1297.20	4913.00
GR	1297.10	4917.00	1297.10	4918.00	1296.90	4924.00	1296.60	4938.00	1296.60	4941.00
GR	1296.70	4952.00	1296.70	4957.00	1296.60	4958.00	1296.70	4960.00	1296.80	4971.00
GR	1296.60	4976.00	1295.80	4978.00	1294.10	4985.00	1292.30	4990.00	1289.60	4994.00
GR	1286.90	4996.00	1286.90	5012.00	1289.80	5014.00	1293.20	5019.00	1293.50	5024.00
GR	1294.30	5033.00	1294.70	5036.00	1294.70	5041.00	1294.50	5044.00	1294.50	5049.00
GR	1294.60	5050.00	1295.20	5056.00	1295.40	5067.00	1295.60	5072.00	1295.40	5078.00
GR	1295.55	5089.50	1295.70	5101.00	1295.80	5105.00	1295.80	5106.00	1295.80	5107.00
GR	1295.90	5110.00	1296.10	5115.00	1296.10	5117.00	1296.10	5120.00	1296.10	5124.00
GR	1296.00	5126.00	1296.10	5131.00	1296.10	5133.00	1296.10	5136.00	1296.10	5139.00
GR	1295.90	5142.00	1296.00	5145.00	1296.50	5147.00	1296.50	5148.00	1296.40	5156.00
GR	1296.30	5160.00	1296.40	5164.00	1296.40	5170.00	1296.40	5171.00	1296.40	5174.00
GR	1296.50	5180.00	1296.50	5183.00	1296.50	5190.00	1296.30	5197.00	1295.80	5211.00
GR	1295.90	5215.00	1295.80	5223.00	1295.70	5232.00	1295.70	5237.00	1295.70	5239.00
GR	1295.70	5240.00	1295.80	5242.00	1295.90	5248.00	1295.90	5251.00	1295.90	5252.00
GR	1296.20	5255.00	1296.20	5257.00	1296.30	5264.00	1296.40	5265.00	1296.60	5269.00
GR	1296.80	5274.00	1297.10	5280.00	1297.40	5284.00	1297.80	5289.00	1297.90	5290.00
GR	1297.90	5294.00	1297.90	5297.00	1297.90	5300.00	1296.70	5303.00	1296.40	5304.00
GR	1296.40	5305.00	1296.40	5310.00	1296.40	5313.00	1296.40	5315.00	1296.40	5319.00
GR	1296.40	5321.00	1296.70	5324.00	1297.20	5330.00	1297.20	5331.00	1297.40	5343.00
GR	1297.70	5352.00	1297.90	5354.00	1297.80	5359.00	1297.90	5363.00	1297.80	5364.00
GR	1297.70	5370.00	1298.40	5377.00	1298.50	5381.00	1298.60	5383.00	1298.60	5386.00
GR	1298.80	5391.00	1299.00	5393.00	1298.90	5405.00	1298.90	5409.00	1299.50	5421.00
GR	1299.50	5431.00	1299.40	5440.00	1299.40	5445.00	1299.20	5457.00	1299.20	5460.00
GR	1299.30	5462.00	1299.40	5467.00	1299.20	5472.00	1298.90	5488.00	1298.90	5491.00
GR	1299.40	5495.00	1299.60	5514.00	1299.60	5525.00	1299.80	5528.00	1299.90	5529.00
GR	1299.80	5530.00	1299.70	5534.00	1299.70	5538.00	1299.90	5544.00	1300.40	5547.00
GR	1300.60	5552.00	1300.20	5559.00	1300.50	5561.00	1300.70	5565.00	1299.90	5574.00
GR	1300.10	5574.00	1303.20	5583.00	1303.30	5584.00	1304.10	5590.00	1304.40	5593.00
GR	1304.50	5594.00	1304.50	5595.00	1304.70	5600.00	1305.20	5615.00	1305.50	5619.00
GR	1305.60	5620.00	1305.60	5625.00	1305.60	5626.00	1305.70	5632.00	1305.70	5636.00
GR	1305.70	5637.00	1305.50	5642.00	1305.60	5646.00	1305.60	5647.00	1305.40	5651.00

```
GR  1307.20  5653.00  1310.90  5657.00  1311.50  5658.00  1315.30  5662.00  1316.30  5664.00
GR  1320.50  5668.00  1328.40  5682.00
X1  7171.00   191.00  4963.00  5042.00   136.00   134.00   135.00     0.00     0.00     0.00
X3                                                                                        1.00
GR  1299.10  4780.00  1299.30  4782.00  1299.30  4789.00  1298.60  4795.00  1298.60  4796.00
GR  1299.30  4799.00  1299.20  4804.00  1299.20  4806.00  1299.20  4808.00  1299.20  4812.00
GR  1299.20  4814.00  1299.20  4816.00  1299.20  4818.00  1299.10  4821.00  1299.20  4827.00
GR  1299.20  4828.00  1299.10  4829.00  1299.00  4835.00  1298.90  4837.00  1298.80  4846.00
GR  1298.90  4847.00  1298.80  4855.00  1298.60  4861.00  1298.50  4866.00  1298.50  4868.00
GR  1298.40  4869.00  1298.40  4870.00  1298.30  4875.00  1298.00  4888.00  1297.90  4892.00
GR  1297.80  4897.00  1297.50  4905.00  1297.40  4907.00  1297.30  4912.00  1297.10  4916.00
GR  1297.10  4917.00  1296.60  4925.00  1296.40  4926.00  1296.30  4928.00  1296.10  4933.00
GR  1295.90  4936.00  1295.80  4939.00  1295.60  4941.00  1295.20  4945.00  1295.00  4952.00
GR  1294.90  4955.00  1294.50  4963.00  1294.20  4964.00  1293.60  4971.00  1293.20  4977.00
GR  1293.10  4979.00  1292.20  4982.00  1291.00  4986.00  1289.20  4991.00  1288.70  4992.00
GR  1288.70  5007.00  1289.10  5008.00  1291.70  5013.00  1292.00  5020.00  1292.10  5022.00
GR  1292.40  5028.00  1292.70  5030.00  1292.70  5031.00  1292.90  5039.00  1293.10  5042.00
GR  1293.40  5047.00  1293.60  5055.00  1293.70  5064.00  1293.90  5072.00  1294.00  5073.00
GR  1293.90  5079.00  1294.00  5083.00  1294.40  5087.00  1294.70  5093.00  1294.80  5095.00
GR  1295.20  5102.00  1295.20  5104.00  1295.30  5110.00  1295.40  5112.00  1295.60  5118.00
GR  1295.70  5122.00  1295.70  5125.00  1295.80  5132.00  1295.80  5133.00  1295.80  5134.00
GR  1295.70  5141.00  1295.70  5142.00  1295.80  5143.00  1295.90  5148.00  1296.10  5150.00
GR  1296.30  5152.00  1296.50  5155.00  1296.00  5159.00  1297.00  5163.00  1297.70  5167.00
GR  1297.70  5171.00  1297.80  5175.00  1298.60  5186.00  1298.60  5187.00  1298.50  5194.00
GR  1298.60  5198.00  1299.10  5215.00  1299.30  5222.00  1299.40  5223.00  1299.20  5225.00
GR  1298.60  5230.00  1298.40  5236.00  1298.40  5238.00  1298.40  5239.00  1298.80  5245.00
GR  1299.30  5251.00  1299.40  5252.00  1299.10  5257.00  1299.10  5260.00  1298.70  5265.00
GR  1298.60  5267.00  1298.50  5272.00  1298.40  5277.00  1298.50  5280.00  1298.40  5282.00
GR  1298.00  5289.00  1297.10  5295.00  1297.10  5297.00  1297.40  5300.00  1297.90  5305.00
GR  1298.00  5310.00  1298.30  5315.00  1298.50  5320.00  1298.70  5323.00  1298.80  5326.00
GR  1299.00  5328.00  1299.20  5332.00  1299.50  5336.00  1299.60  5338.00  1299.90  5342.00
GR  1300.00  5343.00  1300.50  5351.00  1300.60  5354.00  1300.50  5359.00  1300.50  5361.00
GR  1300.60  5362.00  1300.70  5366.00  1300.60  5368.00  1300.90  5373.00  1300.90  5374.00
GR  1301.00  5379.00  1300.90  5385.00  1300.90  5386.00  1301.00  5390.00  1300.90  5395.00
GR  1300.90  5398.00  1300.90  5401.00  1301.10  5403.00  1301.00  5407.00  1300.90  5410.00
GR  1301.10  5413.00  1301.30  5415.00  1301.40  5417.00  1301.60  5420.00  1302.40  5430.00
GR  1302.30  5438.00  1303.00  5442.00  1303.60  5444.00  1304.10  5449.00  1304.20  5451.00
GR  1304.30  5454.00  1305.60  5460.00  1305.80  5461.00  1305.60  5466.00  1306.10  5472.00
GR  1306.20  5473.00  1305.70  5478.00  1305.70  5479.00  1305.70  5480.00  1305.70  5481.00
GR  1305.40  5493.00  1305.10  5505.00  1305.00  5508.00  1305.10  5510.00  1305.20  5514.00
GR  1305.20  5515.00  1305.20  5516.00  1305.20  5519.00  1309.90  5523.00  1312.80  5526.00
GR  1314.10  5528.00  1317.60  5532.00  1319.90  5535.00  1320.50  5536.00  1321.10  5537.00
GR  1322.40  5540.00  1324.30  5543.00
X1  7182.00   175.00  4978.00  5015.00    10.00    10.00    11.00     0.00     0.00     0.00
X3                                                                                        3.00
GR  1299.10  4775.00  1299.10  4777.00  1299.00  4783.00  1299.50  4792.00  1299.50  4794.00
GR  1299.50  4801.00  1299.50  4804.00  1299.30  4810.00  1299.30  4812.00  1299.20  4819.00
GR  1299.10  4823.00  1299.10  4828.00  1299.00  4834.00  1299.00  4836.00  1298.90  4845.00
GR  1298.90  4846.00  1298.80  4854.00  1298.80  4855.00  1298.70  4856.00  1298.50  4863.00
GR  1298.60  4864.00  1298.50  4868.00  1298.40  4872.00  1298.50  4874.00  1298.30  4879.00
GR  1298.30  4880.00  1298.30  4884.00  1298.10  4889.00  1298.10  4890.00  1298.00  4893.00
GR  1298.00  4897.00  1298.00  4899.00  1297.90  4901.00  1297.80  4903.00  1297.80  4905.00
GR  1297.80  4908.00  1297.80  4911.00  1297.80  4912.00  1297.80  4914.00  1297.60  4917.00
GR  1297.40  4922.00  1297.40  4926.00  1297.00  4930.00  1296.90  4932.00  1296.70  4936.00
GR  1296.60  4939.00  1296.60  4945.00  1296.50  4948.00  1296.60  4949.00  1296.30  4960.00
GR  1295.40  4966.00  1295.60  4968.00  1295.60  4970.00  1295.20  4976.00  1295.30  4978.00
GR  1295.40  4979.00  1293.80  4982.00  1291.60  4987.00  1289.30  4991.00  1288.70  4992.00
GR  1288.70  5007.00  1289.80  5007.00  1293.00  5009.00  1294.80  5015.00  1294.80  5022.00
GR  1294.80  5027.00  1294.80  5034.00  1294.90  5037.00  1295.00  5042.00  1295.20  5044.00
GR  1295.20  5045.00  1295.40  5053.00  1295.70  5059.00  1295.70  5064.00  1295.30  5067.00
GR  1294.70  5070.00  1294.80  5072.00  1295.50  5079.00  1295.80  5082.00  1295.90  5090.00
GR  1295.90  5092.00  1296.20  5093.00  1296.20  5095.00  1296.90  5099.00  1297.40  5101.00
GR  1297.50  5103.00  1298.00  5107.00  1298.10  5109.00  1298.10  5110.00  1298.10  5111.00
GR  1297.60  5119.00  1297.60  5122.00  1297.60  5127.00  1297.60  5131.00  1297.70  5133.00
GR  1297.40  5139.00  1297.50  5140.00  1298.20  5144.00  1298.30  5146.00  1298.90  5157.00
GR  1299.10  5158.00  1299.00  5162.00  1298.85  5174.50  1298.70  5187.00  1298.80  5200.50
GR  1298.90  5214.00  1298.50  5219.00  1298.60  5222.00  1298.70  5223.00  1299.10  5228.00
GR  1299.20  5230.00  1299.20  5234.00  1299.20  5236.00  1299.30  5239.00  1299.30  5240.00
GR  1299.50  5246.00  1300.10  5252.00  1300.30  5257.00  1300.30  5260.00  1300.30  5261.00
GR  1300.30  5262.00  1300.40  5278.00  1300.40  5279.00  1300.20  5280.00  1299.40  5285.00
GR  1299.30  5286.00  1299.30  5290.00  1299.10  5292.00  1298.10  5297.00  1298.10  5299.00
```

```
GR  1298.20  5304.00  1298.40  5312.00  1298.70  5315.00  1298.90  5317.00  1299.10  5320.00
GR  1299.20  5325.00  1299.30  5326.00  1299.40  5330.00  1299.40  5332.00  1299.80  5337.00
GR  1299.90  5338.00  1299.90  5340.00  1299.90  5342.00  1299.90  5343.00  1300.90  5351.00
GR  1301.00  5353.00  1301.00  5354.00  1301.00  5360.00  1301.00  5362.00  1301.00  5365.00
GR  1301.00  5368.00  1301.00  5371.00  1301.20  5376.00  1301.20  5378.00  1301.20  5381.00
GR  1301.40  5385.00  1301.50  5387.00  1303.10  5403.00  1303.20  5405.00  1303.70  5410.00
GR  1303.50  5414.00  1304.90  5429.00  1305.20  5431.00  1305.30  5445.00  1305.15  5459.50
GR  1305.00  5474.00  1304.90  5480.00  1305.00  5483.00  1305.10  5485.00  1304.90  5489.00
GR  1304.90  5490.00  1306.10  5491.00  1311.50  5494.00  1313.10  5496.00  1315.10  5498.00
GR  1317.40  5501.00  1320.90  5507.00  1321.10  5507.00
X1  7220.00   156.00  4964.00  5017.00    37.00    40.00    38.00     0.00     0.00     0.00
X3                                                                                       2.00
GR  1299.80  4777.00  1299.60  4780.00  1299.30  4784.00  1299.30  4786.00  1299.40  4793.00
GR  1299.80  4804.00  1299.80  4814.00  1300.00  4817.00  1300.00  4818.00  1299.60  4825.00
GR  1299.60  4828.00  1299.60  4834.00  1299.50  4838.00  1299.40  4841.00  1299.60  4846.00
GR  1299.30  4851.00  1299.30  4859.00  1299.30  4864.00  1299.40  4872.00  1299.30  4877.00
GR  1299.10  4887.50  1298.90  4898.00  1298.90  4904.00  1299.40  4912.00  1299.20  4920.00
GR  1299.10  4932.00  1298.80  4938.00  1298.20  4945.00  1298.30  4946.00  1298.20  4949.00
GR  1298.50  4956.00  1298.80  4959.00  1298.00  4964.00  1296.40  4974.00  1295.20  4980.00
GR  1293.60  4984.00  1292.00  4986.00  1289.30  4987.00  1289.30  4999.00  1292.80  5002.00
GR  1294.30  5006.00  1295.70  5009.00  1295.60  5010.00  1296.40  5014.00  1297.40  5017.00
GR  1297.50  5018.00  1297.20  5027.00  1297.20  5028.00  1297.40  5036.00  1297.40  5038.00
GR  1297.10  5046.00  1297.10  5048.00  1297.10  5055.00  1297.20  5057.00  1297.60  5064.00
GR  1297.80  5067.00  1297.60  5073.00  1297.40  5077.00  1297.50  5078.00  1297.50  5081.00
GR  1297.60  5083.00  1297.60  5087.00  1297.60  5088.00  1297.70  5094.00  1297.80  5097.00
GR  1297.90  5106.00  1297.80  5108.00  1297.90  5111.00  1298.00  5114.00  1298.00  5115.00
GR  1297.70  5116.00  1297.10  5120.00  1297.60  5125.00  1298.40  5129.00  1298.50  5131.00
GR  1298.70  5136.00  1298.70  5137.00  1298.70  5140.00  1298.80  5141.00  1298.80  5142.00
GR  1298.90  5152.50  1299.00  5163.00  1299.10  5170.00  1299.10  5177.00  1299.50  5183.00
GR  1299.40  5186.00  1299.90  5191.00  1300.00  5192.00  1300.00  5194.00  1300.00  5196.00
GR  1300.10  5197.00  1300.20  5205.00  1300.10  5210.00  1300.20  5213.00  1299.90  5220.00
GR  1299.90  5222.00  1299.70  5224.00  1299.70  5232.00  1299.70  5233.00  1299.90  5237.00
GR  1300.00  5240.00  1300.00  5245.00  1299.90  5248.00  1299.90  5251.00  1300.10  5256.00
GR  1300.10  5258.00  1300.10  5260.00  1300.10  5267.00  1300.30  5271.00  1300.50  5273.00
GR  1300.70  5276.00  1300.70  5285.00  1300.70  5286.00  1300.90  5294.00  1301.00  5298.00
GR  1300.70  5307.00  1300.50  5310.00  1300.40  5312.00  1300.40  5315.00  1300.60  5323.00
GR  1300.00  5329.00  1299.90  5335.00  1299.60  5340.00  1299.80  5346.00  1299.80  5347.00
GR  1300.10  5352.00  1300.20  5354.00  1300.60  5357.00  1300.60  5359.00  1301.00  5364.00
GR  1301.20  5367.00  1301.30  5371.00  1301.40  5372.00  1301.80  5377.00  1301.90  5380.00
GR  1302.20  5382.00  1302.20  5384.00  1302.60  5388.00  1303.10  5391.00  1303.30  5394.00
GR  1303.50  5402.00  1304.10  5410.00  1304.20  5412.00  1304.30  5414.00  1303.50  5422.00
GR  1303.10  5425.00  1303.10  5426.00  1304.40  5434.00  1305.30  5440.00  1305.20  5441.00
GR  1304.20  5449.00  1304.20  5450.00  1304.70  5451.00  1308.10  5457.00  1310.20  5462.00
GR  1310.90  5465.00  1312.00  5468.00  1314.00  5472.00
X1  7462.00   195.00  4978.00  5024.00   235.00   277.00   242.00     0.00     0.00     0.00
X3                                                                                       2.00
GR  1302.60  4797.00  1302.70  4806.00  1302.70  4811.00  1302.60  4830.50  1302.50  4850.00
GR  1302.30  4853.00  1302.00  4857.00  1302.20  4859.00  1302.50  4860.00  1302.10  4863.00
GR  1302.00  4870.00  1301.50  4888.00  1301.20  4906.00  1300.70  4916.00  1300.70  4918.00
GR  1300.70  4922.00  1300.80  4927.00  1300.80  4930.00  1300.70  4935.00  1300.60  4937.00
GR  1300.70  4941.00  1300.60  4945.00  1300.40  4947.00  1300.50  4955.00  1300.60  4956.00
GR  1300.70  4957.00  1300.60  4959.00  1300.60  4964.00  1300.70  4971.00  1299.90  4974.00
GR  1300.10  4978.00  1296.40  4981.00  1295.20  4984.00  1295.00  4985.00  1294.50  4988.00
GR  1294.00  4990.00  1292.10  4995.00  1292.10  5004.00  1293.10  5005.00  1294.20  5010.00
GR  1294.70  5012.00  1299.10  5024.00  1299.80  5030.00  1300.20  5040.00  1300.10  5044.00
GR  1300.20  5047.00  1300.20  5050.00  1300.20  5053.00  1300.10  5056.00  1300.10  5061.00
GR  1300.10  5062.00  1300.10  5063.00  1299.80  5068.00  1299.60  5083.00  1300.30  5091.00
GR  1300.50  5101.00  1300.50  5107.00  1300.80  5114.00  1300.90  5117.00  1301.30  5126.00
GR  1301.30  5127.00  1301.80  5137.00  1301.80  5147.00  1301.80  5148.00  1301.90  5153.00
GR  1301.90  5154.00  1302.20  5158.00  1302.60  5163.00  1302.70  5164.00  1302.20  5166.00
GR  1301.90  5169.00  1302.00  5170.00  1301.75  5181.50  1301.50  5193.00  1301.50  5194.00
GR  1302.30  5199.00  1302.20  5204.00  1302.30  5209.00  1302.40  5211.00  1302.30  5215.00
GR  1302.10  5224.00  1301.40  5232.00  1301.70  5239.00  1302.30  5242.00  1302.00  5245.00
GR  1302.10  5261.00  1302.10  5262.00  1302.60  5267.00  1303.60  5273.00  1303.70  5275.00
GR  1303.40  5279.00  1303.20  5281.00  1303.20  5285.00  1303.20  5287.00  1303.80  5294.00
GR  1304.10  5297.00  1304.00  5302.00  1304.00  5303.00  1304.10  5309.00  1304.00  5312.00
GR  1303.80  5316.00  1303.70  5323.00  1303.70  5325.00  1303.70  5326.00  1303.70  5327.00
GR  1303.70  5328.00  1302.50  5332.00  1302.60  5339.00  1302.70  5344.00  1302.90  5348.00
GR  1303.00  5349.00  1303.30  5353.00  1303.50  5359.00  1303.50  5363.00  1303.50  5364.00
GR  1303.90  5371.00  1303.90  5373.00  1304.20  5377.00  1304.50  5379.00  1304.60  5382.00
GR  1305.30  5391.00  1305.40  5392.00  1305.40  5393.00  1304.90  5406.00  1305.00  5407.00
```

GR	1305.20	5409.00	1306.20	5426.00	1306.40	5431.00	1305.70	5443.00	1306.40	5449.00
GR	1306.50	5451.00	1305.90	5456.00	1305.80	5457.00	1305.80	5458.00	1305.80	5469.00
GR	1306.00	5474.00	1306.00	5478.00	1306.10	5479.00	1306.90	5494.00	1306.70	5497.00
GR	1306.50	5500.00	1306.60	5502.00	1307.60	5522.00	1307.60	5524.00	1307.60	5540.00
GR	1307.50	5546.00	1307.80	5548.00	1307.80	5551.00	1307.90	5558.00	1307.90	5560.00
GR	1308.10	5563.00	1309.10	5564.00	1310.60	5565.00	1311.60	5569.00	1314.60	5578.00
GR	1317.00	5584.00	1317.60	5588.00	1318.30	5592.00	1318.10	5596.00	1318.10	5598.00
GR	1318.90	5599.00	1319.80	5600.00	1321.50	5602.00	1321.60	5606.00	1321.60	5608.00
GR	1321.90	5610.00	1322.50	5612.00	1322.50	5613.00	1322.50	5614.00	1322.60	5615.00
GR	1322.60	5616.00	1322.60	5617.00	1322.60	5618.00	1322.50	5623.00	1322.00	5624.00
GR	1321.50	5625.00	1321.60	5626.00	1321.60	5629.00	1321.00	5632.00	1320.80	5633.00
GR	1320.80	5634.00	1320.40	5635.00	1320.80	5644.00	1320.80	5645.00	1320.80	5646.00
GR	1320.40	5648.00	1320.30	5650.00	1323.20	5654.00	1323.50	5655.00	1323.70	5656.00
GR	1323.80	5658.00	1324.60	5660.00	1326.50	5663.00	1327.00	5665.00	1329.80	5671.00
GR	1333.40	5676.00	1333.50	5677.00						
X1	7674.00	251.00	4983.00	5023.00	207.00	324.00	212.00	0.00	0.00	0.00
GR	1302.80	4821.00	1302.80	4822.00	1302.70	4824.00	1302.70	4829.00	1302.40	4840.00
GR	1302.50	4845.00	1302.40	4849.00	1302.40	4851.00	1302.50	4856.00	1302.40	4859.00
GR	1302.50	4862.00	1302.50	4867.00	1302.50	4868.00	1302.40	4869.00	1302.30	4872.00
GR	1302.30	4876.00	1302.40	4880.00	1302.40	4884.00	1302.50	4888.00	1302.50	4892.00
GR	1302.30	4897.00	1302.30	4900.00	1302.30	4905.00	1302.30	4908.00	1302.40	4916.00
GR	1302.40	4917.00	1302.20	4920.00	1302.10	4922.00	1302.10	4924.00	1302.20	4927.00
GR	1302.10	4929.00	1302.10	4933.00	1302.00	4937.00	1302.10	4938.00	1302.20	4945.00
GR	1302.20	4952.00	1302.20	4955.00	1302.10	4959.00	1302.00	4964.00	1302.00	4965.00
GR	1301.90	4968.00	1301.90	4971.00	1302.10	4977.00	1302.40	4983.00	1297.40	4990.00
GR	1296.30	4994.00	1294.70	4995.00	1294.70	5005.00	1296.10	5005.00	1296.70	5006.00
GR	1299.10	5010.00	1299.80	5011.00	1300.50	5016.00	1302.90	5023.00	1303.10	5024.00
GR	1302.80	5028.00	1301.70	5031.00	1301.90	5033.00	1303.50	5038.00	1303.40	5040.00
GR	1303.70	5045.00	1303.70	5046.00	1303.80	5052.00	1303.70	5055.00	1303.70	5060.00
GR	1303.80	5067.00	1303.60	5074.00	1303.70	5076.00	1303.80	5081.00	1303.90	5082.00
GR	1303.90	5084.00	1303.60	5088.00	1303.50	5089.00	1303.40	5094.00	1303.40	5097.00
GR	1303.10	5101.00	1303.60	5105.00	1303.80	5108.00	1304.20	5115.00	1304.30	5116.00
GR	1304.30	5121.00	1304.30	5123.00	1304.30	5128.00	1304.30	5131.00	1304.40	5136.00
GR	1304.20	5139.00	1304.20	5147.00	1304.40	5150.00	1304.50	5153.00	1304.90	5160.00
GR	1305.00	5161.00	1304.80	5167.00	1304.80	5168.00	1304.80	5169.00	1304.80	5174.00
GR	1304.90	5177.00	1304.90	5180.00	1305.10	5185.00	1305.10	5186.00	1305.20	5203.00
GR	1305.20	5212.00	1305.30	5213.00	1305.20	5220.00	1305.30	5222.00	1305.30	5231.00
GR	1305.00	5238.00	1305.10	5240.00	1305.10	5244.00	1305.30	5250.00	1305.20	5257.00
GR	1305.20	5258.00	1305.10	5264.00	1304.80	5269.00	1304.80	5272.00	1304.30	5278.00
GR	1304.30	5281.00	1305.00	5285.00	1305.30	5289.00	1305.70	5292.00	1305.80	5296.00
GR	1305.50	5300.00	1305.40	5301.00	1305.20	5307.00	1305.20	5310.00	1305.30	5320.00
GR	1305.30	5328.00	1305.20	5330.00	1305.20	5336.00	1305.20	5338.00	1305.40	5344.00
GR	1305.60	5351.00	1306.10	5356.00	1306.10	5359.00	1305.90	5362.00	1305.80	5364.00
GR	1305.80	5367.00	1305.10	5374.00	1305.50	5386.00	1306.00	5396.00	1306.00	5397.00
GR	1306.00	5398.00	1306.10	5398.00	1306.20	5405.00	1306.20	5408.00	1306.40	5411.00
GR	1306.30	5413.00	1306.70	5416.00	1306.90	5423.00	1307.30	5428.00	1307.40	5432.00
GR	1307.80	5439.00	1307.90	5441.00	1307.90	5443.00	1307.90	5449.00	1307.80	5451.00
GR	1307.60	5455.00	1307.40	5460.00	1307.40	5461.00	1307.40	5466.00	1307.30	5469.00
GR	1307.40	5472.00	1307.20	5478.00	1307.20	5479.00	1307.30	5484.00	1307.60	5489.00
GR	1307.30	5496.00	1307.20	5499.00	1307.20	5503.00	1307.10	5508.00	1307.20	5512.00
GR	1307.30	5517.00	1307.80	5524.00	1308.20	5532.00	1308.00	5535.00	1308.40	5545.00
GR	1308.40	5547.00	1308.20	5550.00	1308.10	5554.00	1307.90	5556.00	1308.10	5561.00
GR	1308.10	5563.00	1308.10	5564.00	1308.40	5568.00	1308.70	5572.00	1308.80	5573.00
GR	1309.50	5579.00	1310.20	5583.00	1310.40	5584.00	1311.00	5587.00	1311.50	5589.00
GR	1312.10	5592.00	1313.10	5596.00	1313.50	5597.00	1313.40	5604.00	1313.30	5606.00
GR	1313.30	5607.00	1313.50	5612.00	1313.20	5618.00	1313.20	5620.00	1313.40	5623.00
GR	1313.40	5625.00	1313.50	5630.00	1313.30	5637.00	1313.30	5638.00	1313.30	5641.00
GR	1313.20	5642.00	1313.20	5648.00	1313.20	5652.00	1313.40	5656.00	1313.40	5659.00
GR	1313.30	5664.00	1313.30	5669.00	1313.40	5673.00	1313.40	5675.00	1313.40	5679.00
GR	1313.20	5686.00	1313.00	5696.00	1313.20	5701.00	1313.30	5703.00	1313.30	5704.00
GR	1313.20	5711.00	1313.20	5712.00	1312.90	5722.00	1312.90	5729.00	1313.00	5735.00
GR	1312.80	5742.00	1314.10	5755.00	1313.60	5758.00	1313.70	5759.00	1313.70	5760.00
GR	1314.10	5762.00	1314.00	5763.00	1313.90	5764.00	1313.30	5768.00	1313.40	5771.00
GR	1313.40	5772.00	1313.50	5773.00	1313.50	5774.00	1313.50	5776.00	1313.50	5778.00
GR	1313.50	5780.00	1313.60	5782.00	1313.70	5784.00	1313.80	5786.00	1313.90	5787.00
GR	1314.70	5790.00	1315.50	5792.00	1316.80	5794.00	1318.90	5797.00	1320.90	5801.00
GR	1321.60	5803.00								
X1	7835.00	331.00	4980.00	5015.00	162.00	169.00	161.00	0.00	0.00	0.00
GR	1304.90	4836.00	1304.80	4841.00	1304.70	4845.00	1304.60	4850.00	1304.60	4854.00
GR	1304.60	4859.00	1304.60	4866.00	1304.60	4867.00	1305.00	4876.00	1305.00	4880.00
GR	1304.90	4885.00	1304.90	4886.00	1304.90	4893.00	1305.10	4898.00	1305.20	4901.00

GR	1305.00	4908.00	1305.00	4909.00	1305.00	4910.00	1305.00	4916.00	1304.80	4921.00
GR	1304.70	4924.00	1304.90	4930.00	1305.00	4931.00	1305.00	4932.00	1305.00	4939.00
GR	1304.90	4943.00	1304.90	4946.00	1304.70	4953.00	1304.60	4961.00	1304.60	4962.00
GR	1305.10	4969.00	1305.10	4970.00	1304.90	4971.00	1303.50	4980.00	1303.00	4983.00
GR	1300.60	4992.00	1298.50	4995.00	1297.20	4995.00	1297.30	5005.00	1298.70	5007.00
GR	1298.80	5009.00	1301.00	5012.00	1302.70	5015.00	1302.80	5016.00	1302.90	5019.00
GR	1303.20	5025.00	1303.20	5028.00	1303.40	5032.00	1303.30	5035.00	1303.70	5047.00
GR	1303.50	5055.00	1303.60	5057.00	1303.70	5059.00	1304.00	5061.00	1304.70	5067.00
GR	1304.60	5071.00	1304.70	5077.00	1304.60	5081.00	1305.10	5085.00	1305.30	5093.00
GR	1305.30	5096.00	1305.30	5099.00	1305.60	5101.00	1304.90	5104.00	1305.70	5108.00
GR	1305.80	5110.00	1305.40	5123.00	1305.50	5131.00	1305.90	5133.00	1306.70	5140.00
GR	1306.80	5142.00	1307.10	5145.00	1307.20	5150.00	1307.00	5155.00	1307.00	5157.00
GR	1307.00	5160.00	1306.90	5163.00	1306.90	5166.00	1306.90	5169.00	1306.90	5173.00
GR	1306.90	5175.00	1307.10	5181.00	1307.10	5186.00	1307.10	5188.00	1306.70	5191.00
GR	1306.50	5194.00	1306.40	5195.00	1306.30	5201.00	1306.30	5217.00	1306.30	5219.00
GR	1306.30	5226.00	1307.10	5233.00	1307.30	5235.00	1307.20	5236.00	1306.90	5241.00
GR	1307.20	5246.00	1307.30	5248.00	1307.40	5253.00	1307.30	5257.00	1307.30	5259.00
GR	1307.30	5261.00	1307.50	5265.00	1307.50	5268.00	1307.60	5273.00	1307.80	5279.00
GR	1308.00	5284.00	1308.30	5288.00	1308.30	5293.00	1308.20	5297.00	1308.20	5302.00
GR	1308.00	5307.00	1307.70	5311.00	1307.70	5315.00	1307.60	5320.00	1307.70	5321.00
GR	1307.70	5327.00	1307.50	5331.00	1307.50	5335.00	1307.50	5336.00	1307.50	5342.00
GR	1307.60	5351.00	1307.40	5354.00	1307.80	5357.00	1307.70	5358.00	1307.40	5365.00
GR	1307.40	5366.00	1307.40	5367.00	1307.70	5378.00	1307.80	5387.00	1307.80	5388.00
GR	1307.80	5389.00	1307.90	5394.00	1308.20	5398.00	1308.20	5399.00	1308.20	5400.00
GR	1308.20	5404.00	1308.20	5406.00	1307.80	5415.00	1308.00	5420.00	1308.10	5429.00
GR	1308.70	5437.00	1308.90	5442.00	1309.00	5444.00	1309.20	5463.00	1309.20	5468.00
GR	1309.20	5469.00	1309.00	5477.00	1309.20	5481.00	1309.20	5483.00	1309.30	5488.00
GR	1309.00	5493.00	1308.50	5496.00	1308.30	5500.00	1308.60	5506.00	1308.60	5507.00
GR	1308.60	5508.00	1308.70	5515.00	1308.70	5518.00	1308.70	5524.00	1308.80	5529.00
GR	1309.10	5535.00	1309.30	5541.00	1309.50	5545.00	1309.50	5549.00	1309.70	5557.00
GR	1309.70	5558.00	1309.70	5559.00	1309.40	5572.00	1309.70	5575.00	1309.60	5580.00
GR	1309.60	5581.00	1309.60	5582.00	1309.80	5588.00	1309.80	5592.00	1309.90	5595.00
GR	1309.90	5600.00	1310.00	5601.00	1310.30	5607.00	1310.60	5613.00	1310.90	5615.00
GR	1310.90	5616.00	1310.60	5628.00	1310.40	5632.00	1310.50	5635.00	1310.20	5640.00
GR	1310.30	5644.00	1310.40	5647.00	1310.90	5651.00	1311.00	5653.00	1311.20	5656.00
GR	1311.40	5665.00	1311.50	5666.00	1312.00	5673.00	1312.50	5678.00	1312.60	5679.00
GR	1312.70	5681.00	1313.00	5684.00	1313.30	5686.00	1314.00	5691.00	1314.80	5698.00
GR	1314.80	5699.00	1315.20	5708.00	1315.20	5709.00	1315.60	5716.00	1315.80	5721.00
GR	1315.80	5724.00	1316.10	5729.00	1316.20	5731.00	1316.70	5741.00	1316.80	5744.00
GR	1316.30	5750.00	1317.00	5760.00	1316.80	5764.00	1316.70	5770.00	1316.30	5778.00
GR	1316.20	5781.00	1316.20	5783.00	1316.40	5787.00	1316.60	5791.00	1316.60	5792.00
GR	1316.50	5794.00	1315.70	5814.00	1315.70	5816.00	1315.30	5826.00	1315.30	5832.00
GR	1316.00	5845.00	1316.30	5851.00	1316.30	5854.00	1317.90	5864.00	1318.40	5867.00
GR	1319.60	5873.00	1320.80	5880.00	1320.80	5887.00	1321.00	5889.00	1320.20	5893.00
GR	1319.00	5899.00	1318.80	5902.00	1318.00	5903.00	1318.30	5908.00	1318.60	5911.00
GR	1318.60	5912.00	1318.30	5914.00	1317.30	5918.00	1317.50	5919.00	1317.30	5923.00
GR	1317.30	5927.00	1317.40	5928.00	1317.50	5929.00	1317.50	5936.00	1317.50	5937.00
GR	1317.60	5938.00	1317.90	5942.00	1318.00	5945.00	1317.80	5948.00	1317.70	5949.00
GR	1317.70	5950.00	1317.60	5952.00	1317.60	5956.00	1317.80	5960.00	1317.60	5961.00
GR	1318.10	5964.00	1319.40	5966.00	1319.60	5971.00	1320.30	5974.00	1320.90	5976.00
GR	1321.80	5979.00	1322.00	5981.00	1322.10	5982.00	1322.30	5983.00	1322.60	5989.00
GR	1322.60	5990.00	1322.60	5997.00	1322.30	5998.00	1321.90	6000.00	1321.70	6002.00
GR	1321.20	6004.00	1320.60	6006.00	1321.10	6010.00	1321.20	6011.00	1319.70	6017.00
GR	1319.50	6021.00	1319.90	6026.00	1320.60	6030.00	1320.80	6032.00	1321.10	6034.00
GR	1320.30	6037.00	1320.00	6039.00	1319.80	6040.00	1320.30	6043.00	1322.20	6047.00
GR	1322.00	6053.00	1321.90	6054.00	1322.10	6056.00	1325.60	6066.00	1327.00	6070.00
GR	1329.10	6075.00	1330.20	6078.00	1330.60	6079.00	1333.70	6088.00	1338.20	6098.00
GR	1339.20	6100.00	1341.00	6104.00	1344.00	6111.00	1345.30	6115.00	1347.70	6120.00
GR	1347.80	6121.00	1348.70	6123.00	1349.90	6127.00	1349.80	6129.00	1350.80	6131.00
GR	1351.20	6132.00	1351.90	6134.00	1352.20	6134.00	1353.90	6138.00	1356.90	6144.00
GR	1357.90	6147.00	1358.30	6148.00	1358.50	6149.00	1359.70	6153.00	1359.80	6154.00
GR	1360.00	6155.00	1360.70	6156.00	1360.90	6157.00	1362.30	6160.00	1362.80	6161.00
GR	1362.80	6162.00	1363.40	6163.00	1365.60	6168.00	1366.30	6169.00	1367.10	6171.00
GR	1368.90	6176.00								
X1	7977.00	331.00	4975.00	5022.00	144.00	122.00	142.00	0.00	0.00	0.00
X3										2.00
GR	1307.00	4878.00	1307.10	4884.00	1307.40	4887.00	1307.00	4895.00	1306.90	4896.00
GR	1306.80	4897.00	1307.10	4905.00	1306.40	4912.00	1306.30	4913.00	1306.30	4914.00
GR	1306.10	4922.00	1306.00	4924.00	1305.80	4932.00	1305.80	4933.00	1306.90	4940.00
GR	1306.80	4946.00	1306.70	4948.00	1306.70	4949.00	1306.70	4950.00	1306.60	4954.00
GR	1306.60	4959.00	1306.60	4960.00	1305.70	4964.00	1306.30	4973.00	1306.40	4975.00

GR	1302.50	4984.00	1301.60	4986.00	1299.80	4993.00	1299.80	4994.00	1299.80	5005.00
GR	1300.30	5006.00	1301.40	5011.00	1301.60	5012.00	1302.00	5013.00	1306.90	5022.00
GR	1307.40	5030.00	1307.60	5031.00	1307.60	5033.00	1307.70	5037.00	1307.60	5040.00
GR	1307.60	5043.00	1307.90	5049.00	1307.90	5050.00	1308.20	5055.00	1308.30	5060.00
GR	1308.30	5061.00	1308.30	5063.00	1308.50	5067.00	1308.40	5070.00	1308.60	5074.00
GR	1308.60	5080.00	1308.60	5082.00	1308.30	5089.00	1308.20	5090.00	1308.30	5095.00
GR	1308.20	5098.00	1308.20	5101.00	1308.30	5107.00	1308.30	5109.00	1308.20	5117.00
GR	1308.20	5119.00	1308.30	5121.00	1308.70	5126.00	1308.80	5128.00	1309.00	5131.00
GR	1308.90	5135.00	1308.80	5138.00	1308.90	5140.00	1309.10	5144.00	1308.80	5164.00
GR	1308.80	5165.00	1308.90	5173.00	1308.50	5178.00	1308.40	5189.00	1308.20	5194.00
GR	1308.20	5200.00	1308.60	5204.00	1308.30	5211.00	1308.50	5214.00	1308.70	5218.00
GR	1308.70	5224.00	1308.30	5229.00	1308.30	5236.00	1308.40	5240.00	1308.90	5244.00
GR	1308.30	5249.00	1308.30	5250.00	1308.10	5257.00	1308.10	5261.00	1308.10	5263.00
GR	1308.10	5266.00	1308.10	5269.00	1308.10	5272.00	1308.20	5276.00	1308.20	5278.00
GR	1308.40	5284.00	1308.40	5291.00	1308.20	5295.00	1308.10	5298.00	1308.30	5301.00
GR	1308.40	5303.00	1308.70	5306.00	1308.80	5309.00	1308.70	5311.00	1308.70	5315.00
GR	1308.60	5316.00	1308.70	5322.00	1308.90	5324.00	1309.20	5329.00	1309.20	5332.00
GR	1308.70	5337.00	1308.50	5340.00	1308.50	5352.00	1308.50	5364.00	1308.50	5365.00
GR	1308.50	5366.00	1308.90	5375.00	1308.90	5378.00	1308.80	5384.00	1308.80	5390.00
GR	1308.80	5392.00	1308.70	5394.00	1308.50	5400.00	1308.50	5401.00	1308.60	5402.00
GR	1308.70	5404.00	1308.80	5408.00	1309.20	5415.00	1309.40	5422.00	1309.30	5427.00
GR	1309.20	5429.00	1309.30	5435.00	1309.40	5438.00	1309.40	5442.00	1309.40	5446.00
GR	1309.50	5449.00	1309.60	5458.00	1309.50	5464.00	1309.50	5467.00	1309.50	5471.00
GR	1309.60	5474.00	1309.70	5477.00	1309.80	5483.00	1309.80	5489.00	1309.80	5491.00
GR	1309.80	5492.00	1309.90	5497.00	1309.90	5503.00	1310.10	5510.00	1310.20	5516.00
GR	1310.20	5517.00	1310.20	5524.00	1310.30	5528.00	1310.30	5530.00	1310.40	5533.00
GR	1310.40	5536.00	1310.40	5539.00	1310.30	5543.00	1310.00	5549.00	1309.90	5551.00
GR	1310.10	5553.00	1310.50	5557.00	1310.80	5559.00	1310.70	5561.00	1310.40	5569.00
GR	1311.00	5576.00	1311.00	5578.00	1310.90	5583.00	1310.70	5591.00	1310.80	5596.00
GR	1310.80	5602.00	1310.70	5605.00	1310.70	5608.00	1310.80	5610.00	1310.70	5614.00
GR	1310.60	5618.00	1310.70	5622.00	1310.60	5624.00	1310.60	5627.00	1310.50	5630.00
GR	1310.60	5634.00	1310.60	5636.00	1310.60	5638.00	1310.60	5643.00	1310.60	5649.00
GR	1310.60	5650.00	1310.60	5652.00	1310.90	5656.00	1310.90	5660.00	1310.90	5661.00
GR	1310.90	5663.00	1310.90	5667.00	1311.00	5669.00	1311.20	5678.00	1311.10	5679.00
GR	1311.20	5680.00	1311.40	5697.00	1311.00	5704.00	1311.00	5706.00	1311.20	5709.00
GR	1311.60	5712.00	1311.80	5715.00	1312.30	5723.00	1312.20	5726.00	1311.80	5729.00
GR	1311.50	5732.00	1311.30	5735.00	1311.50	5741.00	1311.70	5744.00	1311.50	5748.00
GR	1311.50	5751.00	1312.30	5755.00	1312.60	5761.00	1312.60	5765.00	1312.95	5778.50
GR	1313.30	5792.00	1313.50	5796.00	1313.80	5800.00	1313.60	5803.00	1313.40	5805.00
GR	1313.40	5806.00	1313.20	5811.00	1313.20	5815.00	1313.30	5823.00	1313.30	5827.00
GR	1313.20	5834.00	1312.80	5843.00	1313.30	5844.00	1313.30	5846.00	1313.40	5852.00
GR	1313.50	5859.00	1313.60	5862.00	1313.60	5864.00	1312.90	5868.00	1312.50	5871.00
GR	1312.90	5874.00	1313.70	5878.00	1313.50	5883.00	1313.50	5886.00	1313.80	5893.00
GR	1313.80	5895.00	1314.00	5900.00	1313.90	5904.00	1313.90	5905.00	1313.40	5908.00
GR	1313.20	5912.00	1313.10	5914.00	1313.80	5917.00	1313.90	5918.00	1313.70	5921.00
GR	1313.60	5922.00	1313.50	5923.00	1314.10	5925.00	1313.50	5928.00	1313.30	5929.00
GR	1313.60	5931.00	1313.80	5933.00	1314.00	5935.00	1314.10	5937.00	1314.10	5938.00
GR	1314.10	5940.00	1314.10	5941.00	1314.10	5944.00	1314.20	5945.00	1314.20	5948.00
GR	1314.20	5950.00	1314.20	5954.00	1314.30	5955.00	1314.30	5956.00	1314.40	5958.00
GR	1314.40	5959.00	1314.30	5961.00	1314.10	5964.00	1314.20	5968.00	1314.20	5969.00
GR	1314.40	5972.00	1314.70	5976.00	1314.60	5977.00	1314.60	5980.00	1314.60	5984.00
GR	1315.00	5988.00	1314.50	5994.00	1314.30	6001.00	1314.70	6003.00	1314.30	6008.00
GR	1314.20	6009.00	1314.10	6024.00	1314.10	6025.00	1314.10	6026.00	1314.70	6029.00
GR	1314.30	6031.00	1314.10	6033.00	1314.90	6039.00	1314.40	6040.00	1314.10	6041.00
GR	1314.90	6048.00	1315.10	6055.00	1314.40	6062.00	1314.70	6064.00	1315.00	6065.00
GR	1314.70	6068.00	1314.60	6069.00	1314.40	6071.00	1314.40	6073.00	1314.40	6079.00
GR	1314.40	6080.00	1314.40	6081.00	1316.20	6090.00	1316.30	6091.00	1317.00	6093.00
GR	1317.50	6095.00	1317.80	6099.00	1317.90	6100.00	1320.10	6103.00	1320.50	6105.00
GR	1322.10	6108.00	1322.40	6109.00	1322.70	6114.00	1323.80	6120.00	1324.40	6124.00
GR	1324.80	6125.00	1325.60	6128.00	1327.00	6131.00	1327.70	6133.00	1328.10	6134.00
GR	1329.00	6136.00	1329.00	6139.00	1329.90	6143.00	1330.60	6145.00	1330.90	6146.00
GR	1331.20	6146.00	1334.20	6150.00	1334.70	6152.00				
X1	8156.00	326.00	4970.00	5023.00	190.00	132.00	179.00	0.00	0.00	0.00
X3										1.00
GR	1311.30	4864.00	1311.20	4867.00	1311.10	4872.00	1310.70	4880.00	1310.40	4882.00
GR	1310.50	4885.00	1310.60	4897.00	1310.90	4905.00	1311.00	4907.00	1310.90	4911.00
GR	1311.10	4914.00	1310.90	4919.00	1310.60	4925.00	1310.70	4929.00	1310.60	4932.00
GR	1310.10	4940.00	1310.00	4940.00	1309.70	4942.00	1308.60	4948.00	1308.40	4950.00
GR	1308.40	4956.00	1308.50	4959.00	1308.90	4964.00	1308.80	4968.00	1308.80	4969.00
GR	1308.60	4970.00	1307.50	4976.00	1306.90	4980.00	1306.40	4982.00	1305.80	4983.00
GR	1304.30	4988.00	1301.70	4994.00	1301.40	4995.00	1301.40	5005.00	1304.10	5005.00

GR	1304.50	5006.00	1305.20	5009.00	1306.80	5017.00	1307.10	5019.00	1308.40	5023.00
GR	1310.10	5028.00	1311.80	5032.00	1311.80	5034.00	1312.20	5038.00	1312.20	5047.00
GR	1311.10	5051.00	1310.30	5056.00	1310.20	5060.00	1309.60	5075.00	1309.50	5085.00
GR	1309.40	5088.00	1309.60	5092.00	1309.40	5096.00	1309.00	5102.00	1308.50	5114.00
GR	1308.40	5116.00	1308.90	5124.00	1309.40	5130.00	1309.30	5134.00	1309.50	5138.00
GR	1309.80	5142.00	1309.80	5144.00	1309.90	5161.00	1309.80	5170.00	1309.80	5175.00
GR	1309.70	5180.00	1309.70	5182.00	1309.70	5185.00	1309.80	5192.00	1309.80	5194.00
GR	1309.80	5195.00	1309.80	5202.00	1309.80	5208.00	1309.90	5211.00	1309.80	5215.00
GR	1309.80	5219.00	1309.80	5221.00	1309.80	5225.00	1309.80	5229.00	1309.70	5231.00
GR	1309.60	5238.00	1309.60	5245.00	1309.60	5248.00	1309.60	5252.00	1309.60	5257.00
GR	1309.60	5259.00	1309.60	5261.00	1309.50	5265.00	1309.50	5270.00	1309.50	5271.00
GR	1309.50	5272.00	1309.50	5279.00	1309.50	5286.00	1309.50	5287.00	1309.60	5297.00
GR	1309.60	5299.00	1309.60	5305.00	1309.70	5312.00	1309.80	5313.00	1309.80	5315.00
GR	1309.80	5321.00	1310.00	5325.00	1310.10	5328.00	1310.20	5332.00	1310.20	5335.00
GR	1310.20	5337.00	1310.20	5341.00	1310.30	5348.00	1310.30	5350.00	1310.40	5355.00
GR	1310.30	5360.00	1310.40	5362.00	1310.40	5363.00	1310.50	5367.00	1310.50	5371.00
GR	1310.50	5373.00	1310.50	5375.00	1310.50	5380.00	1310.00	5384.00	1309.50	5389.00
GR	1309.90	5393.00	1310.40	5397.00	1310.40	5401.00	1310.30	5406.00	1310.40	5408.00
GR	1310.30	5423.00	1310.20	5426.00	1310.10	5429.00	1310.60	5435.00	1310.90	5442.00
GR	1310.80	5444.00	1311.00	5447.00	1311.10	5451.00	1311.20	5454.00	1311.30	5458.00
GR	1311.40	5461.00	1311.40	5465.00	1311.40	5468.00	1311.40	5471.00	1311.50	5473.00
GR	1311.60	5477.00	1311.60	5481.00	1311.70	5483.00	1311.70	5485.00	1311.70	5490.00
GR	1311.80	5494.00	1311.90	5497.00	1311.80	5499.00	1311.80	5503.00	1311.30	5505.00
GR	1310.80	5510.00	1310.90	5511.00	1312.00	5520.00	1312.20	5526.00	1312.20	5528.00
GR	1312.10	5530.00	1310.70	5534.00	1310.70	5536.00	1311.00	5544.00	1310.70	5547.00
GR	1310.90	5552.00	1311.20	5558.00	1311.20	5559.00	1311.60	5566.00	1311.90	5573.00
GR	1311.80	5579.00	1311.90	5584.00	1311.90	5585.00	1312.00	5586.00	1311.90	5593.00
GR	1312.00	5601.00	1312.05	5615.00	1312.10	5629.00	1312.20	5632.00	1312.10	5635.00
GR	1312.20	5638.00	1312.30	5645.00	1312.10	5653.00	1312.10	5654.00	1312.10	5655.00
GR	1312.00	5659.00	1311.80	5661.00	1312.30	5674.00	1312.50	5675.00	1312.40	5685.00
GR	1312.50	5687.00	1312.40	5693.00	1312.30	5695.00	1312.20	5696.00	1311.80	5702.00
GR	1312.10	5707.00	1312.30	5709.00	1312.70	5718.00	1312.80	5719.00	1312.60	5729.00
GR	1312.90	5737.00	1313.30	5745.00	1313.70	5750.00	1313.10	5756.00	1313.20	5769.00
GR	1313.20	5770.00	1313.70	5775.00	1313.80	5780.00	1313.70	5781.00	1313.30	5787.00
GR	1313.10	5790.00	1312.70	5793.00	1312.70	5795.00	1313.20	5801.00	1313.30	5804.00
GR	1313.50	5808.00	1313.60	5809.00	1313.70	5816.00	1313.70	5818.00	1313.60	5821.00
GR	1313.40	5836.00	1313.30	5841.00	1313.40	5843.00	1314.60	5851.00	1314.70	5852.00
GR	1314.70	5853.00	1314.60	5855.00	1314.60	5860.00	1314.80	5866.00	1314.80	5867.00
GR	1314.80	5868.00	1314.90	5873.00	1314.80	5879.00	1314.80	5880.00	1314.80	5881.00
GR	1314.90	5886.00	1314.90	5892.00	1314.90	5893.00	1314.80	5900.00	1314.90	5907.00
GR	1314.90	5908.00	1315.00	5913.00	1314.50	5920.00	1314.40	5924.00	1314.40	5927.00
GR	1314.30	5934.00	1314.40	5942.00	1314.70	5948.00	1314.80	5950.00	1314.80	5951.00
GR	1314.90	5954.00	1315.00	5956.00	1314.90	5957.00	1314.80	5961.00	1314.90	5962.00
GR	1315.40	5963.00	1315.60	5965.00	1315.70	5967.00	1315.60	5968.00	1315.30	5973.00
GR	1315.40	5974.00	1315.40	5976.00	1315.40	5977.00	1314.80	5980.00	1314.80	5982.00
GR	1314.80	5984.00	1315.00	5986.00	1315.40	5988.00	1314.90	5990.00	1314.80	5994.00
GR	1314.80	5998.00	1315.00	6000.00	1314.90	6000.00	1314.80	6002.00	1315.00	6007.00
GR	1314.90	6010.00	1314.90	6013.00	1314.80	6014.00	1314.80	6016.00	1315.50	6019.00
GR	1315.10	6021.00	1315.10	6023.00	1315.70	6027.00	1315.70	6032.00	1315.60	6037.00
GR	1315.50	6039.00	1315.40	6041.00	1315.40	6042.00	1315.00	6045.00	1315.10	6053.00
GR	1315.20	6054.00	1315.60	6056.00	1315.80	6059.00	1315.50	6061.00	1315.80	6062.00
GR	1315.60	6065.00	1315.30	6068.00	1315.30	6069.00	1315.40	6072.00	1315.10	6075.00
GR	1315.10	6076.00	1315.20	6077.00	1315.20	6078.00	1315.10	6079.00	1315.20	6082.00
GR	1315.10	6088.00	1315.00	6089.00	1315.10	6091.00	1314.90	6093.00	1315.50	6105.00
GR	1315.40	6106.00	1315.40	6107.00	1315.30	6110.00	1315.30	6111.00	1315.20	6113.00
GR	1315.50	6114.00	1315.10	6115.00	1314.90	6127.00	1314.80	6129.00	1314.90	6130.00
GR	1315.70	6134.00	1316.10	6137.00	1316.30	6139.00	1316.50	6143.00	1316.80	6145.00
GR	1315.90	6145.00	1316.10	6146.00	1317.40	6148.00	1318.20	6151.00	1318.80	6153.00
GR	1319.70	6156.00	1320.10	6159.00						
X1	8333.00	351.00	4971.00	5014.00	175.00	122.00	177.00	0.00	0.00	0.00
GR	1312.90	4727.00	1313.00	4729.00	1313.30	4735.00	1313.10	4740.00	1313.00	4744.00
GR	1312.90	4747.00	1312.60	4754.00	1312.60	4756.00	1312.70	4762.00	1312.70	4766.00
GR	1312.70	4770.00	1312.70	4777.00	1312.70	4778.00	1312.10	4790.00	1311.90	4794.00
GR	1311.70	4803.00	1311.50	4813.00	1311.40	4817.00	1311.20	4823.00	1311.20	4825.00
GR	1311.00	4831.00	1311.00	4833.00	1310.80	4838.00	1310.80	4844.00	1310.80	4845.00
GR	1310.80	4849.00	1310.70	4853.00	1310.70	4855.00	1310.70	4860.00	1310.50	4866.00
GR	1310.50	4867.00	1310.50	4869.00	1310.60	4876.00	1310.60	4880.00	1310.50	4885.00
GR	1310.40	4894.00	1310.50	4902.00	1310.40	4907.00	1310.40	4910.00	1310.20	4916.00
GR	1310.00	4920.00	1310.10	4927.00	1309.90	4934.00	1309.90	4937.00	1310.10	4942.00
GR	1310.40	4945.00	1310.40	4947.00	1310.30	4953.00	1309.90	4960.00	1309.80	4962.00
GR	1309.20	4965.00	1308.40	4968.00	1308.40	4971.00	1305.90	4977.00	1305.40	4978.00

```
GR  1304.30  4984.00  1303.40  4985.00  1303.40  4995.00  1304.40  4995.00  1304.70  4999.00
GR  1304.90  5000.00  1305.80  5005.00  1306.10  5005.00  1309.30  5014.00  1310.20  5018.00
GR  1311.50  5023.00  1312.50  5026.00  1315.50  5033.00  1313.80  5036.00  1311.20  5040.00
GR  1310.30  5041.00  1311.00  5045.00  1311.60  5049.00  1312.00  5056.00  1312.00  5059.00
GR  1312.00  5065.00  1312.00  5067.00  1312.10  5073.00  1312.10  5076.00  1311.90  5084.00
GR  1311.80  5086.00  1311.80  5089.00  1311.80  5095.00  1311.90  5096.00  1311.90  5103.00
GR  1311.70  5109.00  1311.70  5111.00  1311.70  5112.00  1311.70  5117.00  1311.60  5120.00
GR  1311.70  5123.00  1311.70  5128.00  1311.70  5130.00  1311.70  5132.00  1311.70  5137.00
GR  1311.60  5142.00  1311.60  5144.00  1311.60  5146.00  1311.60  5152.00  1311.70  5158.00
GR  1311.70  5159.00  1311.90  5165.00  1311.70  5170.00  1311.60  5172.00  1311.70  5174.00
GR  1311.80  5179.00  1311.80  5184.00  1311.80  5187.00  1311.80  5190.00  1312.20  5196.00
GR  1312.40  5200.00  1311.80  5205.00  1311.70  5206.00  1311.70  5211.00  1311.60  5218.00
GR  1311.80  5227.00  1311.90  5231.00  1311.90  5234.00  1312.00  5241.00  1312.20  5250.00
GR  1312.30  5258.00  1312.30  5264.00  1312.30  5265.00  1312.30  5266.00  1312.50  5273.00
GR  1312.30  5277.00  1312.50  5287.00  1312.40  5289.00  1312.60  5291.00  1312.80  5299.00
GR  1312.80  5301.00  1312.50  5306.00  1312.10  5313.00  1312.00  5315.00  1312.00  5316.00
GR  1311.90  5330.00  1312.00  5332.00  1312.00  5335.00  1311.80  5344.00  1312.10  5355.00
GR  1312.60  5363.00  1312.90  5366.00  1313.40  5384.00  1314.70  5390.00  1315.00  5395.00
GR  1315.10  5397.00  1315.30  5399.00  1316.00  5405.00  1316.60  5407.00  1317.10  5409.00
GR  1317.20  5414.00  1317.40  5416.00  1317.50  5422.00  1317.50  5423.00  1317.50  5424.00
GR  1317.60  5426.00  1317.60  5433.00  1318.10  5440.00  1318.20  5441.00  1318.20  5442.00
GR  1317.60  5449.00  1317.60  5450.00  1317.10  5457.00  1317.10  5458.00  1316.30  5476.00
GR  1315.70  5486.00  1315.30  5491.00  1314.60  5510.00  1313.30  5521.00  1313.30  5522.00
GR  1313.50  5526.00  1313.50  5528.00  1313.50  5529.00  1313.30  5535.00  1313.30  5540.00
GR  1313.30  5543.00  1313.60  5546.00  1313.90  5549.00  1314.10  5552.00  1314.50  5556.00
GR  1315.30  5560.00  1315.60  5562.00  1315.80  5564.00  1315.80  5570.00  1315.50  5573.00
GR  1315.40  5575.00  1314.10  5593.00  1314.90  5605.00  1314.00  5620.00  1314.00  5621.00
GR  1314.00  5622.00  1314.10  5624.00  1314.00  5625.00  1314.20  5632.00  1314.10  5634.00
GR  1314.20  5638.00  1314.50  5641.00  1314.40  5643.00  1314.40  5646.00  1314.40  5648.00
GR  1314.50  5654.00  1314.30  5668.00  1314.80  5680.00  1314.80  5683.00  1314.80  5691.00
GR  1314.90  5699.00  1314.60  5703.00  1314.50  5707.00  1314.60  5715.00  1314.40  5721.00
GR  1314.40  5726.00  1314.40  5729.00  1313.60  5744.00  1313.30  5747.00  1312.70  5756.00
GR  1314.40  5760.00  1314.50  5761.00  1314.20  5767.00  1314.90  5772.00  1314.40  5777.00
GR  1314.80  5796.00  1314.90  5810.00  1315.20  5811.00  1315.50  5817.00  1315.70  5819.00
GR  1315.80  5826.00  1315.80  5828.00  1315.80  5830.00  1315.70  5836.00  1315.80  5843.00
GR  1315.90  5844.00  1316.80  5850.00  1316.60  5853.00  1316.00  5857.00  1315.10  5861.00
GR  1315.10  5863.00  1315.20  5865.00  1315.40  5872.00  1315.50  5873.00  1315.60  5879.00
GR  1316.00  5882.00  1315.70  5885.00  1316.30  5888.00  1316.30  5889.00  1316.30  5890.00
GR  1316.20  5891.00  1316.00  5894.00  1316.00  5895.00  1315.90  5898.00  1315.90  5899.00
GR  1315.80  5900.00  1316.20  5905.00  1316.10  5906.00  1316.30  5907.00  1316.20  5909.00
GR  1316.00  5911.00  1316.00  5912.00  1315.80  5916.00  1316.00  5920.00  1316.10  5922.00
GR  1316.20  5924.00  1316.10  5926.00  1315.80  5933.00  1315.80  5934.00  1315.90  5940.00
GR  1316.10  5942.00  1316.10  5943.00  1315.70  5944.00  1315.90  5946.00  1315.90  5948.00
GR  1315.80  5949.00  1315.50  5952.00  1315.50  5953.00  1315.80  5954.00  1315.90  5957.00
GR  1316.00  5957.00  1315.80  5960.00  1315.30  5964.00  1315.00  5966.00  1314.90  5968.00
GR  1314.90  5969.00  1314.90  5976.00  1314.90  5977.00  1315.20  5979.00  1315.20  5982.00
GR  1315.70  5987.00  1315.10  5991.00  1315.30  5992.00  1315.30  5994.00  1315.70  6000.00
GR  1315.80  6001.00  1315.50  6008.00  1315.70  6010.00  1315.40  6013.00  1315.30  6014.00
GR  1315.40  6016.00  1315.40  6018.00  1315.50  6019.00  1315.60  6020.00  1315.60  6021.00
GR  1315.70  6024.00  1315.60  6026.00  1315.80  6027.00  1315.80  6035.00  1315.60  6040.00
GR  1316.30  6047.00  1316.60  6050.00  1316.60  6051.00  1316.60  6052.00  1316.70  6054.00
GR  1317.00  6057.00  1317.10  6058.00  1317.30  6060.00  1317.40  6062.00  1317.70  6064.00
GR  1317.80  6066.00  1318.30  6073.00  1318.40  6074.00  1319.10  6077.00  1319.30  6078.00
GR  1319.60  6080.00  1319.70  6083.00  1319.50  6084.00  1319.50  6088.00  1319.90  6090.00
GR  1320.00  6091.00  1320.80  6094.00  1321.30  6097.00  1321.80  6099.00  1321.90  6101.00
GR  1323.40  6106.00  1323.70  6107.00  1324.20  6110.00  1324.30  6111.00  1324.30  6112.00
GR  1324.30  6114.00  1324.40  6115.00  1326.60  6121.00  1326.90  6123.00  1327.20  6124.00
GR  1329.90  6128.00  1330.00  6128.00  1331.10  6130.00  1333.80  6137.00  1334.70  6139.00
GR  1336.20  6143.00  1337.70  6145.00  1337.70  6146.00  1338.00  6149.00  1338.60  6151.00
GR  1338.70  6152.00
X1  8661.00   325.00  4963.00  5011.00   325.00   240.00   328.00     0.00     0.00     0.00
X3                                                                                      4.00
GR  1317.60  4644.00  1317.70  4647.00  1316.90  4650.00  1317.00  4655.00  1316.50  4661.00
GR  1316.30  4665.00  1316.30  4668.00  1316.30  4672.00  1315.30  4687.00  1315.80  4703.00
GR  1315.80  4704.00  1315.90  4710.00  1315.90  4712.00  1315.80  4720.00  1315.75  4733.00
GR  1315.70  4746.00  1315.70  4748.00  1315.70  4750.00  1315.70  4752.00  1315.30  4756.00
GR  1315.20  4757.00  1315.10  4761.00  1315.10  4765.00  1315.10  4767.00  1315.20  4769.00
GR  1315.20  4772.00  1315.20  4777.00  1315.20  4778.00  1315.20  4779.00  1315.20  4782.00
GR  1315.30  4785.00  1315.50  4788.00  1315.40  4795.00  1315.40  4796.00  1315.40  4799.00
GR  1315.30  4804.00  1315.30  4808.00  1315.40  4826.00  1315.30  4830.00  1315.40  4831.00
GR  1315.40  4833.00  1315.40  4834.00  1315.30  4836.00  1315.20  4845.00  1315.20  4850.00
```

GR	1315.10	4851.00	1315.10	4853.00	1315.10	4856.00	1315.10	4859.00	1315.10	4861.00
GR	1315.00	4865.00	1314.90	4866.00	1314.90	4867.00	1314.60	4871.00	1315.20	4875.00
GR	1315.30	4876.00	1315.30	4881.00	1315.20	4886.00	1315.20	4899.00	1315.40	4903.00
GR	1314.70	4908.00	1314.30	4927.00	1314.30	4928.00	1315.10	4945.00	1314.90	4949.00
GR	1314.90	4953.00	1314.90	4955.00	1314.70	4963.00	1314.30	4964.00	1311.00	4973.00
GR	1309.90	4977.00	1308.70	4981.00	1307.70	4984.00	1307.70	4985.00	1307.70	4994.00
GR	1308.50	4998.00	1309.00	5001.00	1309.20	5003.00	1312.80	5007.00	1315.70	5011.00
GR	1315.90	5012.00	1316.70	5015.00	1317.90	5020.00	1318.10	5020.00	1318.00	5022.00
GR	1317.40	5030.00	1317.40	5031.00	1317.40	5039.00	1317.40	5040.00	1317.80	5045.00
GR	1317.40	5048.00	1317.40	5049.00	1317.30	5054.00	1317.30	5069.00	1317.20	5071.00
GR	1317.10	5074.00	1316.90	5077.00	1316.60	5090.00	1316.60	5091.00	1316.60	5092.00
GR	1316.50	5095.00	1316.30	5100.00	1316.30	5104.00	1316.30	5108.00	1316.30	5109.00
GR	1316.30	5110.00	1316.30	5114.00	1316.40	5116.00	1316.50	5118.00	1316.50	5121.00
GR	1316.50	5123.00	1316.60	5124.00	1317.00	5129.00	1317.00	5131.00	1318.50	5131.00
GR	1323.20	5133.00	1323.10	5139.00	1323.10	5145.00	1322.50	5157.00	1322.50	5159.00
GR	1323.30	5161.00	1323.30	5164.00	1323.20	5166.00	1323.10	5169.00	1322.50	5173.00
GR	1322.05	5189.50	1321.60	5206.00	1321.40	5208.00	1321.40	5209.00	1320.90	5212.00
GR	1317.80	5231.00	1317.80	5232.00	1317.40	5235.00	1317.50	5236.00	1317.40	5237.00
GR	1317.20	5246.00	1317.20	5250.00	1317.30	5253.00	1317.70	5260.00	1317.75	5273.00
GR	1317.80	5286.00	1317.80	5290.00	1318.10	5295.00	1318.00	5298.00	1318.00	5301.00
GR	1317.80	5303.00	1318.00	5305.00	1318.00	5306.00	1318.40	5308.00	1318.80	5313.00
GR	1318.40	5319.00	1318.50	5321.00	1318.50	5325.00	1317.40	5335.00	1317.20	5337.00
GR	1317.10	5338.00	1317.10	5340.00	1317.40	5357.00	1316.80	5360.00	1316.60	5363.00
GR	1316.40	5369.00	1316.30	5370.00	1316.30	5374.00	1316.30	5378.00	1316.10	5379.00
GR	1316.40	5380.00	1317.10	5384.00	1317.30	5386.00	1317.70	5388.00	1317.90	5393.00
GR	1318.10	5397.00	1318.30	5401.00	1318.40	5403.00	1318.60	5406.00	1318.70	5414.00
GR	1318.70	5415.00	1318.70	5417.00	1319.10	5424.00	1319.10	5435.00	1319.40	5443.00
GR	1319.10	5445.00	1318.90	5447.00	1318.20	5452.00	1318.10	5453.00	1317.90	5454.00
GR	1317.30	5461.00	1317.20	5463.00	1317.10	5467.00	1317.00	5470.00	1317.00	5474.00
GR	1316.90	5479.00	1316.90	5481.00	1316.90	5485.00	1316.90	5487.00	1316.85	5499.00
GR	1316.80	5511.00	1317.80	5519.00	1317.80	5520.00	1317.80	5526.00	1317.40	5531.00
GR	1317.40	5532.00	1317.20	5536.00	1316.90	5540.00	1316.90	5546.00	1316.70	5557.00
GR	1316.60	5558.00	1316.60	5560.00	1316.70	5562.00	1316.50	5566.00	1316.50	5572.00
GR	1316.40	5574.00	1316.20	5578.00	1316.20	5585.00	1316.20	5587.00	1316.30	5589.00
GR	1316.20	5591.00	1316.30	5592.00	1316.60	5595.00	1316.80	5599.00	1316.80	5600.00
GR	1316.80	5604.00	1316.80	5607.00	1316.80	5608.00	1316.80	5611.00	1316.80	5613.00
GR	1316.80	5614.00	1316.90	5617.00	1316.80	5621.00	1316.90	5625.00	1317.50	5628.00
GR	1317.70	5630.00	1317.60	5632.00	1317.30	5636.00	1317.00	5644.00	1317.10	5648.00
GR	1317.20	5649.00	1316.90	5651.00	1316.00	5658.00	1315.40	5661.00	1315.80	5664.00
GR	1315.80	5665.00	1315.80	5672.00	1316.10	5674.00	1316.40	5678.00	1316.60	5681.00
GR	1316.60	5682.00	1316.80	5684.00	1317.00	5692.00	1316.90	5699.00	1317.00	5700.00
GR	1317.20	5705.00	1317.30	5707.00	1317.50	5709.00	1317.60	5711.00	1319.20	5725.00
GR	1319.30	5727.00	1319.40	5730.00	1319.40	5731.00	1319.40	5732.00	1319.50	5736.00
GR	1319.60	5740.00	1319.70	5742.00	1319.80	5745.00	1319.90	5748.00	1320.10	5753.00
GR	1320.10	5754.00	1320.20	5755.00	1320.20	5756.00	1320.40	5763.00	1320.30	5770.00
GR	1320.30	5773.00	1320.40	5777.00	1320.70	5782.00	1321.00	5789.00	1321.00	5791.00
GR	1321.10	5792.00	1321.00	5798.00	1320.90	5799.00	1321.00	5800.00	1321.10	5802.00
GR	1321.30	5803.00	1321.40	5804.00	1321.90	5806.00	1321.60	5808.00	1321.90	5810.00
GR	1322.00	5812.00	1322.00	5813.00	1321.70	5816.00	1321.90	5822.00	1322.00	5828.00
GR	1322.10	5832.00	1321.90	5834.00	1322.10	5839.00	1321.60	5841.00	1321.60	5843.00
GR	1321.70	5844.00	1321.70	5845.00	1321.80	5850.00	1321.90	5851.00	1321.70	5853.00
GR	1321.80	5854.00	1321.80	5856.00	1322.00	5858.00	1322.00	5859.00	1321.70	5862.00
GR	1321.80	5863.00	1321.40	5866.00	1321.40	5868.00	1321.30	5869.00	1321.30	5870.00
GR	1321.30	5872.00	1321.10	5875.00	1321.00	5876.00	1321.20	5877.00	1321.80	5880.00
GR	1321.90	5881.00	1321.90	5883.00	1321.80	5885.00	1321.70	5889.00	1323.40	5891.00
GR	1323.70	5892.00	1324.00	5893.00	1325.10	5896.00	1326.40	5898.00	1326.90	5900.00
GR	1327.40	5901.00	1329.50	5905.00	1330.30	5907.00	1331.00	5909.00		
X1	9076.00	377.00	4973.00	5015.00	420.00	362.00	415.00	0.00	0.00	0.00
X3										7.00
GR	1334.70	4181.00	1333.60	4183.00	1333.20	4184.00	1332.90	4184.00	1325.90	4193.00
GR	1326.50	4203.00	1326.70	4215.00	1326.80	4216.00	1326.70	4219.00	1326.80	4221.00
GR	1326.90	4222.00	1326.70	4225.00	1326.60	4226.00	1326.70	4228.00	1326.60	4229.00
GR	1326.40	4230.00	1326.30	4233.00	1325.90	4235.00	1325.90	4236.00	1325.50	4245.00
GR	1325.30	4249.00	1325.00	4251.00	1324.90	4253.00	1324.30	4258.00	1323.40	4266.00
GR	1323.40	4272.00	1323.50	4273.00	1322.30	4282.00	1322.30	4283.00	1322.20	4284.00
GR	1321.90	4293.00	1322.00	4294.00	1322.40	4296.00	1322.70	4298.00	1323.80	4303.00
GR	1322.40	4317.00	1322.40	4318.00	1322.50	4319.00	1322.90	4326.00	1323.00	4327.00
GR	1323.00	4328.00	1323.30	4333.00	1323.40	4335.00	1323.50	4336.00	1323.50	4340.00
GR	1323.60	4342.00	1323.60	4343.00	1323.60	4344.00	1324.10	4347.00	1323.60	4351.00
GR	1323.60	4352.00	1323.80	4356.00	1323.70	4359.00	1323.70	4362.00	1323.90	4372.00
GR	1323.80	4377.00	1323.70	4386.00	1323.70	4392.00	1323.40	4402.00	1323.40	4403.00

GR	1323.20	4411.00	1323.20	4412.00	1323.30	4418.00	1323.30	4426.00	1323.40	4431.00
GR	1323.60	4441.00	1323.70	4442.00	1323.70	4446.00	1323.70	4450.00	1323.70	4451.00
GR	1323.40	4468.50	1323.10	4486.00	1323.10	4491.00	1323.30	4494.00	1323.20	4495.00
GR	1323.20	4499.00	1323.20	4500.00	1323.00	4502.00	1322.70	4505.00	1322.10	4518.00
GR	1322.20	4522.00	1322.40	4530.00	1322.80	4538.00	1322.80	4539.00	1323.50	4546.00
GR	1323.50	4549.00	1323.10	4555.00	1323.00	4559.00	1323.20	4563.00	1323.20	4570.00
GR	1323.00	4572.00	1323.20	4580.00	1324.00	4590.00	1323.90	4591.00	1323.20	4599.00
GR	1322.80	4602.00	1322.10	4607.00	1322.10	4616.00	1322.20	4625.00	1321.90	4634.00
GR	1322.20	4646.00	1322.30	4651.00	1322.40	4652.00	1322.40	4659.00	1322.40	4661.00
GR	1322.70	4675.00	1322.60	4679.00	1322.90	4688.00	1322.90	4691.00	1323.00	4695.00
GR	1323.40	4705.00	1323.40	4706.00	1323.50	4715.00	1323.50	4725.00	1323.40	4732.00
GR	1323.70	4741.00	1323.50	4755.00	1323.50	4756.00	1323.00	4772.00	1322.50	4788.00
GR	1322.70	4806.00	1322.65	4823.00	1322.60	4840.00	1322.70	4842.00	1322.40	4850.00
GR	1322.00	4858.00	1321.50	4861.00	1321.60	4863.00	1322.30	4871.00	1322.50	4880.00
GR	1322.60	4886.00	1321.30	4892.00	1321.00	4894.00	1321.20	4896.00	1321.70	4898.00
GR	1321.70	4899.00	1321.60	4907.00	1321.60	4910.00	1321.70	4912.00	1321.70	4913.00
GR	1322.00	4921.00	1322.00	4927.00	1322.10	4930.00	1322.10	4935.00	1322.50	4940.00
GR	1322.20	4946.00	1322.10	4948.00	1322.10	4949.00	1321.60	4962.00	1320.10	4968.00
GR	1319.30	4973.00	1316.30	4979.00	1314.60	4981.00	1313.00	4982.00	1313.00	4993.00
GR	1315.70	5010.00	1315.90	5011.00	1318.40	5015.00	1318.30	5026.00	1318.50	5028.00
GR	1319.20	5034.00	1320.40	5042.00	1321.10	5046.00	1321.70	5051.00	1321.90	5062.00
GR	1321.80	5067.00	1321.70	5070.00	1321.90	5077.00	1321.90	5078.00	1321.80	5087.00
GR	1321.90	5105.00	1321.90	5107.00	1321.70	5109.00	1321.40	5116.00	1321.40	5119.00
GR	1322.05	5129.50	1322.70	5140.00	1323.20	5146.00	1323.20	5147.00	1323.10	5152.00
GR	1322.70	5161.00	1322.60	5164.00	1322.60	5167.00	1322.90	5172.00	1323.20	5175.00
GR	1322.60	5183.00	1322.80	5186.00	1323.60	5188.00	1323.80	5189.00	1323.80	5190.00
GR	1323.10	5204.00	1322.40	5218.00	1322.50	5221.00	1322.50	5224.00	1322.40	5226.00
GR	1322.40	5228.00	1322.20	5233.00	1322.20	5236.00	1321.90	5239.00	1321.60	5244.00
GR	1321.80	5254.00	1321.90	5259.00	1322.00	5263.00	1322.40	5268.00	1322.70	5271.00
GR	1322.70	5276.00	1323.10	5296.00	1323.90	5299.00	1323.90	5303.00	1323.50	5312.00
GR	1323.10	5319.00	1323.00	5328.00	1323.00	5337.00	1322.80	5354.00	1322.80	5356.00
GR	1323.60	5360.00	1323.60	5363.00	1322.30	5369.00	1322.10	5374.00	1321.60	5381.00
GR	1321.10	5389.00	1321.10	5393.00	1321.20	5397.00	1321.50	5401.00	1321.90	5402.00
GR	1322.10	5409.00	1322.40	5412.00	1322.20	5414.00	1322.20	5420.00	1322.20	5421.00
GR	1322.30	5423.00	1322.30	5440.00	1322.40	5448.00	1322.40	5450.00	1322.40	5453.00
GR	1322.00	5465.00	1321.60	5470.00	1321.60	5472.00	1321.50	5481.00	1321.30	5490.00
GR	1321.20	5494.00	1320.90	5499.00	1321.00	5500.00	1321.50	5507.00	1321.60	5509.00
GR	1321.50	5512.00	1322.20	5524.00	1321.80	5529.00	1321.00	5533.00	1321.00	5550.00
GR	1321.10	5558.00	1321.30	5566.00	1321.70	5575.00	1321.70	5577.00	1321.80	5578.00
GR	1321.80	5580.00	1322.20	5588.00	1322.30	5589.00	1322.00	5597.00	1322.30	5612.00
GR	1322.70	5617.00	1322.70	5622.00	1322.65	5633.00	1322.60	5644.00	1323.10	5656.00
GR	1322.80	5676.00	1322.20	5689.00	1322.20	5690.00	1322.10	5691.00	1321.90	5694.00
GR	1321.90	5695.00	1321.90	5696.00	1321.60	5703.00	1320.70	5720.00	1320.90	5725.00
GR	1321.40	5732.00	1321.50	5734.00	1321.40	5745.00	1321.70	5747.00	1321.70	5750.00
GR	1321.80	5752.00	1322.10	5755.00	1322.90	5764.00	1323.10	5765.00	1323.10	5766.00
GR	1323.80	5773.00	1323.90	5775.00	1324.80	5783.00	1325.40	5792.00	1325.50	5794.00
GR	1325.60	5805.00	1325.60	5810.00	1325.60	5816.00	1325.60	5819.00	1325.30	5827.00
GR	1325.30	5828.00	1325.40	5831.00	1325.30	5833.00	1325.20	5835.00	1325.10	5836.00
GR	1325.40	5838.00	1325.20	5841.00	1325.10	5842.00	1324.40	5846.00	1324.50	5848.00
GR	1324.20	5852.00	1323.80	5855.00	1323.90	5857.00	1323.90	5858.00	1323.60	5863.00
GR	1323.50	5864.00	1323.30	5866.00	1323.30	5868.00	1323.20	5870.00	1323.00	5873.00
GR	1322.90	5874.00	1322.70	5875.00	1322.80	5877.00	1322.40	5879.00	1322.40	5881.00
GR	1322.20	5882.00	1322.20	5883.00	1322.10	5886.00	1322.00	5887.00	1322.10	5890.00
GR	1321.50	5893.00	1321.40	5894.00	1320.80	5895.00	1323.10	5901.00	1323.50	5906.00
GR	1323.50	5907.00	1323.20	5911.00	1323.70	5912.00	1323.60	5914.00	1323.30	5916.00
GR	1323.40	5919.00	1323.40	5920.00	1323.90	5923.00	1323.90	5927.00	1324.00	5928.00
GR	1324.30	5930.00	1324.30	5931.00	1324.50	5933.00	1324.30	5936.00	1324.40	5937.00
GR	1324.30	5938.00	1324.00	5947.00	1323.80	5949.00	1323.70	5957.00	1323.60	5959.00
GR	1323.70	5960.00	1323.70	5967.00	1323.80	5968.00	1323.80	5969.00	1323.80	5973.00
GR	1323.80	5975.00	1323.80	5977.00	1323.80	5981.00	1323.80	5983.00	1323.90	5984.00
GR	1324.60	5990.00	1324.40	5992.00	1328.20	5994.00	1328.10	5995.00	1328.10	6004.00
GR	1328.40	6018.00	1328.70	6032.00	1328.80	6033.00	1328.60	6034.00	1328.70	6036.00
GR	1328.50	6038.00	1328.60	6039.00	1328.50	6040.00	1328.50	6042.00	1328.80	6047.00
GR	1329.40	6048.00	1330.30	6050.00	1331.20	6052.00	1331.80	6054.00	1332.50	6057.00
GR	1333.30	6061.00	1333.30	6062.00	1334.10	6065.00	1334.20	6070.00		
X1	9389.00	334.00	4975.00	5024.00	311.00	264.00	313.00	0.00	0.00	0.00
X3										4.00
GR	1397.40	4190.00	1397.20	4191.00	1397.10	4192.00	1396.80	4195.00	1393.90	4202.00
GR	1393.20	4204.00	1392.40	4207.00	1391.40	4211.00	1388.20	4218.00	1387.50	4220.00
GR	1386.50	4224.00	1385.70	4227.00	1384.70	4230.00	1384.30	4231.00	1384.00	4233.00
GR	1383.20	4235.00	1382.20	4238.00	1382.10	4239.00	1379.90	4246.00	1379.30	4247.00

GR	1377.30	4254.00	1376.90	4255.00	1375.90	4259.00	1374.90	4262.00	1374.70	4263.00
GR	1374.00	4264.00	1371.00	4272.00	1370.90	4273.00	1371.00	4273.00	1368.60	4280.00
GR	1367.60	4283.00	1366.40	4287.00	1366.00	4289.00	1363.70	4297.00	1363.30	4300.00
GR	1361.20	4308.00	1359.90	4311.00	1357.20	4318.00	1355.40	4322.00	1354.20	4325.00
GR	1352.80	4328.00	1348.00	4338.00	1347.40	4339.00	1346.80	4340.00	1343.80	4345.00
GR	1339.30	4353.00	1337.10	4356.00	1331.70	4368.00	1331.40	4369.00	1331.00	4370.00
GR	1327.90	4376.00	1327.50	4378.00	1327.20	4382.00	1326.50	4388.00	1326.00	4393.00
GR	1325.80	4395.00	1326.00	4400.00	1326.00	4401.00	1326.30	4409.00	1326.50	4411.00
GR	1326.80	4419.00	1326.90	4420.00	1327.00	4422.00	1327.00	4424.00	1326.80	4427.00
GR	1326.50	4437.00	1326.80	4445.00	1326.80	4446.00	1327.40	4454.00	1327.40	4458.00
GR	1327.30	4463.00	1327.40	4471.00	1327.40	4472.00	1327.40	4473.00	1328.20	4492.00
GR	1328.20	4500.00	1328.30	4502.00	1328.30	4509.00	1328.25	4523.50	1328.20	4538.00
GR	1327.50	4547.00	1327.30	4552.00	1327.20	4553.00	1327.30	4558.00	1327.40	4563.00
GR	1327.30	4572.00	1327.20	4574.00	1326.60	4577.00	1326.60	4583.00	1326.80	4593.00
GR	1326.60	4603.00	1326.50	4608.00	1326.20	4615.00	1326.20	4618.00	1326.70	4629.00
GR	1326.90	4631.00	1326.80	4640.00	1326.70	4641.00	1326.00	4648.00	1325.80	4651.00
GR	1325.70	4656.00	1325.90	4663.00	1326.00	4665.00	1325.90	4669.00	1325.90	4673.00
GR	1325.90	4674.00	1325.90	4682.00	1326.10	4684.00	1326.70	4693.00	1326.70	4699.00
GR	1326.70	4700.00	1327.20	4706.00	1327.30	4710.00	1327.80	4714.00	1327.50	4720.00
GR	1327.20	4733.67	1326.90	4747.33	1326.60	4761.00	1326.60	4765.00	1326.40	4767.00
GR	1326.40	4769.00	1326.30	4774.00	1326.30	4777.00	1326.30	4778.00	1326.50	4786.00
GR	1326.80	4791.00	1327.00	4796.00	1326.20	4804.00	1326.20	4805.00	1326.20	4808.00
GR	1326.20	4821.00	1326.40	4825.00	1326.40	4836.00	1326.40	4842.00	1326.80	4860.00
GR	1326.80	4868.00	1326.70	4872.00	1326.80	4878.00	1327.00	4883.00	1327.40	4892.00
GR	1327.20	4895.00	1327.10	4896.00	1327.10	4904.00	1327.10	4906.00	1327.20	4912.00
GR	1327.20	4915.00	1327.30	4916.00	1327.20	4923.00	1327.20	4927.00	1327.10	4932.00
GR	1327.10	4938.00	1327.20	4940.00	1327.20	4941.00	1327.10	4944.00	1327.20	4950.00
GR	1326.70	4957.00	1326.70	4958.00	1325.90	4966.00	1325.20	4969.00	1322.60	4975.00
GR	1319.90	4980.00	1318.90	4983.00	1317.80	4988.00	1316.50	4994.00	1316.50	4995.00
GR	1316.50	5005.00	1319.40	5019.00	1321.90	5022.00	1324.30	5024.00	1325.30	5029.00
GR	1326.30	5042.00	1326.30	5048.00	1326.30	5053.00	1326.30	5057.00	1326.20	5058.00
GR	1325.60	5060.00	1325.70	5072.00	1325.70	5076.00	1325.90	5077.00	1326.30	5082.00
GR	1326.40	5088.00	1326.30	5095.00	1326.10	5097.00	1326.10	5101.00	1325.90	5104.00
GR	1325.30	5121.00	1325.40	5124.00	1325.30	5126.00	1326.10	5133.00	1326.10	5136.00
GR	1326.20	5141.00	1326.20	5145.00	1326.20	5146.00	1326.30	5155.00	1326.40	5164.00
GR	1326.50	5173.00	1326.50	5174.00	1326.40	5182.00	1326.40	5184.00	1326.30	5191.00
GR	1326.20	5194.00	1326.10	5200.00	1326.00	5201.00	1326.00	5203.00	1326.10	5213.00
GR	1326.10	5217.00	1326.30	5220.00	1326.00	5222.00	1325.70	5229.00	1325.90	5232.00
GR	1325.90	5234.00	1325.10	5242.00	1325.30	5252.00	1325.20	5257.00	1325.40	5261.00
GR	1325.60	5266.00	1325.50	5269.00	1325.70	5275.00	1325.80	5283.00	1326.10	5284.00
GR	1326.10	5289.00	1326.10	5290.00	1326.10	5292.00	1326.40	5299.00	1326.10	5309.00
GR	1326.00	5316.00	1326.00	5326.00	1326.00	5328.00	1326.00	5329.00	1325.50	5337.00
GR	1325.50	5341.00	1325.10	5347.00	1324.80	5354.00	1324.80	5357.00	1324.90	5359.00
GR	1325.50	5365.00	1326.80	5385.00	1326.80	5386.00	1326.70	5396.00	1326.90	5412.00
GR	1326.80	5415.00	1326.90	5420.00	1326.90	5424.00	1326.80	5429.00	1326.80	5440.00
GR	1326.70	5443.00	1326.50	5446.00	1326.30	5453.00	1326.20	5455.00	1325.90	5462.00
GR	1325.90	5464.00	1325.40	5472.00	1325.40	5473.00	1325.00	5481.00	1324.60	5491.00
GR	1324.70	5492.00	1324.80	5500.00	1324.80	5501.00	1324.70	5506.00	1324.70	5511.00
GR	1324.80	5522.00	1324.80	5527.00	1324.50	5533.00	1324.50	5536.00	1324.50	5552.50
GR	1324.50	5569.00	1324.80	5581.00	1324.80	5585.00	1325.70	5597.00	1325.80	5600.00
GR	1325.80	5603.00	1325.80	5606.00	1325.80	5608.00	1325.80	5612.00	1326.00	5630.00
GR	1326.00	5635.00	1326.00	5636.00	1326.00	5638.00	1325.80	5642.00	1325.70	5649.00
GR	1325.40	5654.00	1324.90	5658.00	1325.50	5663.00	1325.50	5664.00	1325.90	5672.00
GR	1325.90	5673.00	1325.90	5677.00	1325.90	5682.00	1325.50	5692.00	1325.30	5699.00
GR	1325.30	5701.00	1325.80	5719.00	1325.00	5721.00	1325.20	5725.00	1326.10	5731.00
GR	1326.20	5738.00	1325.80	5741.00	1325.70	5743.00	1325.80	5750.00	1325.80	5752.00
GR	1326.40	5760.00	1326.40	5763.00	1326.30	5769.00	1326.30	5770.00	1326.00	5775.00
GR	1326.20	5778.00	1326.20	5779.00	1325.90	5787.00	1325.90	5788.00	1325.90	5789.00
GR	1326.10	5794.00	1325.90	5796.00	1326.00	5797.00	1326.10	5799.00	1326.30	5803.00
GR	1326.20	5804.00	1326.20	5805.00	1326.20	5809.00	1326.20	5815.00	1326.30	5817.00
GR	1326.00	5822.00	1325.80	5824.00	1325.80	5825.00	1325.40	5827.00	1325.20	5832.00
GR	1325.50	5837.00	1325.30	5839.00	1325.30	5842.00	1325.10	5854.00	1323.40	5869.00
GR	1328.70	5881.00	1328.60	5894.00	1328.90	5903.00	1328.90	5907.00	1332.20	5910.00
GR	1334.60	5914.00	1337.30	5918.00	1339.80	5923.00				
X1	9468.00	401.00	4954.00	5068.00	79.00	65.00	79.00	0.00	0.00	0.00
X3										1.00
GR	1336.30	4213.00	1336.30	4216.00	1336.30	4217.00	1336.90	4219.00	1336.90	4220.00
GR	1336.40	4225.00	1335.40	4236.00	1334.40	4252.00	1334.20	4253.00	1334.20	4255.00
GR	1334.40	4257.00	1334.50	4259.00	1334.70	4261.00	1334.00	4262.00	1332.50	4264.00
GR	1332.40	4267.00	1331.80	4271.00	1331.80	4273.00	1331.70	4274.00	1331.80	4277.00
GR	1331.80	4279.00	1332.00	4281.00	1331.90	4283.00	1331.90	4284.00	1331.80	4289.00

GR	1331.80	4290.00	1331.70	4292.00	1331.70	4293.00	1331.70	4295.00	1331.60	4301.00
GR	1331.60	4302.00	1331.40	4306.00	1331.20	4309.00	1331.20	4310.00	1331.20	4311.00
GR	1331.00	4314.00	1330.70	4320.00	1330.50	4322.00	1330.30	4329.00	1330.20	4330.00
GR	1329.70	4338.00	1329.40	4341.00	1329.10	4347.00	1328.90	4353.00	1328.70	4356.00
GR	1328.60	4358.00	1328.60	4364.00	1328.40	4369.00	1328.30	4374.00	1328.10	4376.00
GR	1327.90	4382.00	1328.10	4388.00	1328.10	4390.00	1328.30	4396.00	1328.30	4399.00
GR	1328.30	4400.00	1328.20	4407.00	1328.50	4410.00	1328.50	4416.00	1328.50	4421.00
GR	1328.60	4424.00	1328.60	4432.00	1328.60	4435.00	1328.50	4442.00	1328.30	4446.00
GR	1328.20	4451.00	1328.10	4459.00	1328.10	4460.00	1327.70	4467.00	1327.80	4469.00
GR	1328.20	4475.00	1328.30	4478.00	1328.30	4484.00	1328.30	4486.00	1328.30	4488.00
GR	1328.30	4489.00	1328.70	4498.00	1327.90	4506.00	1327.90	4508.00	1328.00	4512.00
GR	1327.30	4518.00	1327.50	4519.00	1327.70	4525.00	1327.70	4527.00	1328.00	4532.00
GR	1328.10	4534.00	1328.10	4535.00	1328.00	4542.00	1327.80	4547.00	1328.00	4553.00
GR	1327.70	4559.00	1327.60	4566.00	1327.40	4570.00	1327.60	4575.00	1327.60	4577.00
GR	1327.60	4586.00	1327.60	4590.00	1327.50	4596.00	1327.50	4598.00	1327.70	4603.00
GR	1327.90	4607.00	1328.20	4615.00	1328.20	4619.00	1328.00	4624.00	1327.80	4631.00
GR	1327.70	4633.00	1327.80	4634.00	1327.90	4639.00	1328.10	4645.00	1327.50	4656.00
GR	1326.80	4666.00	1326.60	4667.00	1326.90	4673.00	1327.20	4676.00	1327.20	4685.00
GR	1327.10	4688.00	1327.00	4693.00	1327.10	4698.00	1327.30	4702.00	1327.30	4709.00
GR	1327.30	4710.00	1327.40	4715.00	1327.50	4719.00	1327.60	4720.00	1327.60	4728.00
GR	1327.70	4733.00	1327.80	4737.00	1327.80	4745.00	1327.70	4746.00	1327.80	4749.00
GR	1327.90	4755.00	1327.90	4756.00	1327.80	4763.00	1327.80	4767.00	1327.70	4771.00
GR	1327.80	4777.00	1327.80	4780.00	1328.00	4788.00	1328.00	4789.00	1328.10	4796.00
GR	1328.10	4798.00	1328.00	4803.00	1328.10	4807.00	1328.30	4811.00	1328.10	4817.00
GR	1328.10	4819.00	1328.00	4827.00	1327.90	4835.00	1327.90	4841.00	1328.00	4847.00
GR	1327.90	4848.00	1327.90	4851.00	1328.20	4858.00	1328.20	4859.00	1328.00	4867.00
GR	1328.00	4868.00	1327.90	4876.00	1327.90	4877.00	1327.80	4885.00	1327.60	4889.00
GR	1327.50	4892.00	1327.50	4899.00	1327.50	4900.00	1327.30	4905.00	1327.20	4909.00
GR	1327.20	4910.00	1326.90	4917.00	1326.90	4921.00	1326.70	4926.00	1326.50	4933.00
GR	1326.50	4935.00	1326.30	4940.00	1326.20	4944.00	1326.20	4945.00	1325.90	4954.00
GR	1325.30	4956.00	1324.20	4960.00	1324.20	4961.00	1323.90	4963.00	1323.80	4971.00
GR	1323.90	4979.00	1323.80	4985.00	1323.50	4988.00	1323.40	4992.00	1323.30	4995.00
GR	1323.30	5004.00	1323.30	5005.00	1323.50	5011.00	1323.50	5013.00	1323.60	5014.00
GR	1323.80	5021.00	1323.90	5024.00	1324.10	5028.00	1324.30	5033.00	1324.50	5036.00
GR	1324.80	5043.00	1324.90	5045.00	1325.40	5052.00	1325.50	5054.00	1325.90	5060.00
GR	1326.10	5062.00	1326.30	5064.00	1326.80	5068.00	1326.80	5077.00	1326.70	5084.00
GR	1326.70	5090.00	1326.70	5096.00	1326.30	5104.00	1326.30	5105.00	1326.20	5106.00
GR	1326.50	5111.00	1326.50	5113.00	1326.50	5114.00	1326.80	5121.00	1327.00	5125.00
GR	1327.20	5129.00	1327.00	5136.00	1327.00	5137.00	1327.40	5141.00	1327.80	5145.00
GR	1327.80	5147.00	1327.00	5153.00	1326.90	5157.00	1326.80	5167.00	1326.80	5169.00
GR	1327.00	5176.00	1327.10	5177.00	1327.20	5186.00	1327.20	5187.00	1327.00	5195.00
GR	1327.10	5197.00	1327.10	5204.00	1327.10	5207.00	1327.10	5214.00	1327.00	5218.00
GR	1327.00	5223.00	1327.10	5228.00	1327.10	5232.00	1327.00	5241.00	1327.10	5248.00
GR	1327.10	5250.00	1327.10	5259.00	1327.10	5260.00	1327.00	5269.00	1327.10	5278.00
GR	1327.10	5279.00	1327.10	5287.00	1327.10	5289.00	1327.10	5296.00	1327.00	5299.00
GR	1327.00	5305.00	1327.00	5309.00	1327.00	5315.00	1327.10	5319.00	1327.00	5324.00
GR	1327.00	5329.00	1326.90	5333.00	1326.70	5340.00	1326.70	5342.00	1326.90	5350.00
GR	1327.00	5351.00	1326.80	5360.00	1326.70	5368.00	1326.60	5370.00	1326.60	5379.00
GR	1326.80	5388.00	1326.80	5390.00	1326.70	5397.00	1326.70	5400.00	1326.70	5406.00
GR	1326.50	5410.00	1326.70	5415.00	1326.70	5420.00	1326.50	5423.00	1326.40	5431.00
GR	1326.40	5432.00	1325.90	5441.00	1325.90	5442.00	1325.90	5451.00	1325.90	5452.00
GR	1325.90	5460.00	1325.90	5461.00	1325.80	5470.00	1325.80	5475.00	1325.90	5479.00
GR	1326.10	5485.00	1326.20	5488.00	1326.10	5489.00	1326.10	5490.00	1325.80	5504.00
GR	1325.70	5511.00	1325.40	5514.00	1325.60	5526.00	1326.00	5532.00	1326.10	5533.00
GR	1326.20	5534.00	1326.30	5536.00	1326.50	5543.00	1326.80	5552.00	1326.80	5553.00
GR	1327.30	5558.00	1327.50	5561.00	1327.50	5562.00	1327.60	5570.00	1327.60	5571.00
GR	1327.80	5579.00	1327.80	5581.00	1327.90	5587.00	1328.00	5590.00	1328.00	5596.00
GR	1328.10	5600.00	1328.20	5605.00	1328.20	5610.00	1328.20	5613.00	1328.20	5619.00
GR	1328.10	5622.00	1328.20	5629.00	1328.20	5631.00	1328.00	5638.00	1327.90	5639.00
GR	1327.10	5648.00	1326.80	5660.00	1326.70	5665.00	1326.60	5667.00	1326.50	5673.00
GR	1327.10	5684.00	1327.10	5685.00	1327.10	5686.00	1326.90	5692.00	1326.40	5703.00
GR	1326.60	5705.00	1326.60	5709.00	1326.40	5712.00	1326.60	5723.00	1326.80	5734.00
GR	1326.80	5738.00	1326.90	5739.00	1327.00	5747.00	1327.30	5753.00	1327.30	5756.00
GR	1327.80	5764.00	1327.80	5766.00	1327.80	5767.00	1328.10	5775.00	1328.10	5778.00
GR	1328.20	5780.00	1328.20	5781.00	1328.30	5786.00	1328.70	5788.00	1328.30	5793.00
GR	1328.30	5795.00	1328.70	5796.00	1329.40	5797.00	1329.50	5798.00	1329.40	5800.00
GR	1329.30	5803.00	1329.40	5808.00	1329.40	5811.00	1329.20	5814.00	1329.40	5815.00
GR	1329.30	5817.00	1329.30	5819.00	1329.20	5821.00	1329.10	5823.00	1328.80	5824.00
GR	1328.70	5826.00	1328.60	5827.00	1328.20	5831.00	1328.20	5832.00	1328.10	5840.00
GR	1327.60	5850.00	1327.70	5851.00	1327.70	5860.00	1328.40	5868.00	1328.40	5870.00
GR	1328.60	5873.00	1329.00	5878.00	1328.80	5879.00	1329.20	5882.00	1329.10	5884.00

GR	1329.20	5886.00	1329.20	5889.00	1329.20	5891.00	1329.30	5894.00	1329.30	5895.00
GR	1329.30	5896.00	1329.30	5897.00	1329.20	5899.00	1329.20	5900.00	1329.10	5901.00
GR	1328.90	5904.00	1328.70	5907.00	1328.90	5911.00	1329.10	5913.00	1329.30	5915.00
GR	1330.20	5916.00	1330.80	5917.00	1333.90	5922.00	1336.30	5924.00	1336.80	5925.00
GR	1338.90	5929.00	1339.40	5930.00						
X1	9503.00	382.00	4965.00	5029.00	35.00	44.00	35.00	0.00	0.00	0.00
X3										5.00
GR	1336.50	4211.00	1336.20	4213.00	1336.00	4214.00	1336.10	4215.00	1335.80	4218.00
GR	1335.40	4222.00	1335.30	4227.00	1335.20	4229.00	1335.10	4230.00	1334.80	4232.00
GR	1334.70	4233.00	1334.70	4236.00	1334.70	4238.00	1334.80	4239.00	1334.60	4240.00
GR	1334.60	4241.00	1334.40	4243.00	1334.70	4246.00	1334.10	4249.00	1334.10	4250.00
GR	1334.00	4254.00	1334.20	4255.00	1334.20	4259.00	1334.20	4262.00	1333.00	4263.00
GR	1332.30	4264.00	1332.20	4265.00	1332.10	4266.00	1332.00	4268.00	1332.20	4270.00
GR	1332.10	4272.00	1332.10	4275.00	1332.00	4277.00	1331.90	4278.00	1332.00	4279.00
GR	1332.10	4282.00	1332.00	4285.00	1331.90	4287.00	1331.90	4288.00	1331.80	4291.00
GR	1331.70	4293.00	1331.50	4295.00	1331.40	4297.00	1331.60	4301.00	1331.60	4303.00
GR	1331.50	4305.00	1331.40	4306.00	1331.30	4308.00	1330.90	4313.00	1330.80	4315.00
GR	1330.30	4318.00	1330.40	4319.00	1330.20	4322.00	1329.60	4327.00	1329.60	4329.00
GR	1329.60	4336.00	1329.70	4341.00	1329.80	4345.00	1329.90	4352.00	1329.90	4354.00
GR	1329.80	4362.00	1329.80	4363.00	1329.80	4364.00	1329.90	4371.00	1329.80	4375.00
GR	1329.80	4380.00	1329.30	4387.00	1329.20	4388.00	1329.20	4391.00	1329.10	4396.00
GR	1329.10	4397.00	1328.80	4404.00	1328.80	4407.00	1328.80	4412.00	1329.00	4417.00
GR	1328.90	4418.00	1328.70	4427.00	1328.80	4428.00	1328.90	4431.00	1329.30	4443.00
GR	1329.40	4447.00	1329.30	4453.00	1329.20	4455.00	1329.20	4456.00	1329.40	4469.00
GR	1329.10	4475.00	1329.20	4482.00	1328.90	4485.00	1328.60	4491.00	1328.80	4495.00
GR	1328.60	4499.00	1328.70	4503.00	1328.70	4504.00	1328.70	4505.00	1328.20	4513.00
GR	1328.50	4515.00	1328.80	4516.00	1327.70	4531.00	1327.80	4538.00	1328.40	4544.00
GR	1328.70	4552.00	1328.80	4554.00	1328.90	4563.00	1329.00	4573.00	1328.90	4577.00
GR	1328.80	4582.00	1328.70	4588.00	1328.80	4591.00	1328.80	4593.00	1328.80	4594.00
GR	1329.30	4600.00	1329.30	4603.00	1329.20	4611.00	1329.10	4614.00	1328.70	4618.00
GR	1328.30	4621.00	1328.40	4629.00	1328.40	4630.00	1328.70	4638.00	1328.60	4641.00
GR	1328.60	4644.00	1328.60	4646.00	1328.80	4654.00	1328.70	4655.00	1328.30	4660.00
GR	1327.90	4664.00	1327.70	4665.00	1327.20	4672.00	1327.20	4676.00	1327.40	4681.00
GR	1327.70	4688.00	1327.70	4690.00	1327.50	4699.00	1327.50	4700.00	1327.80	4708.00
GR	1329.10	4714.00	1329.80	4717.00	1329.80	4718.00	1329.10	4729.00	1329.60	4733.00
GR	1328.90	4741.00	1329.00	4742.00	1328.80	4744.00	1328.90	4748.00	1329.00	4753.00
GR	1329.20	4755.00	1329.10	4756.00	1329.50	4764.00	1329.50	4765.00	1329.40	4771.00
GR	1329.40	4774.00	1329.40	4779.00	1329.60	4784.00	1329.60	4786.00	1329.10	4793.00
GR	1329.10	4794.00	1329.10	4795.00	1329.20	4802.00	1329.10	4803.00	1329.20	4806.00
GR	1329.10	4814.00	1329.10	4816.00	1329.10	4820.00	1329.30	4825.00	1329.40	4833.00
GR	1329.40	4841.00	1329.70	4844.00	1329.80	4850.00	1329.30	4855.00	1329.20	4857.00
GR	1329.60	4866.00	1328.60	4872.00	1328.60	4874.00	1328.90	4879.00	1329.30	4887.00
GR	1329.70	4898.00	1330.10	4905.00	1329.70	4917.00	1329.60	4922.00	1329.40	4939.00
GR	1329.30	4955.00	1329.20	4956.00	1328.40	4965.00	1327.20	4969.00	1325.70	4974.00
GR	1325.00	4977.00	1323.70	4983.00	1323.80	4984.00	1323.60	4993.00	1323.60	4995.00
GR	1323.60	5004.00	1323.60	5005.00	1323.60	5007.00	1323.60	5008.00	1323.90	5013.00
GR	1324.10	5016.00	1324.30	5017.00	1325.20	5020.00	1325.80	5022.00	1327.30	5029.00
GR	1327.40	5032.00	1327.30	5038.00	1327.30	5040.00	1327.20	5048.00	1327.20	5049.00
GR	1327.30	5056.00	1327.30	5058.00	1327.50	5062.00	1327.40	5064.00	1327.50	5070.00
GR	1326.95	5088.50	1326.40	5107.00	1326.60	5112.00	1326.60	5113.00	1327.40	5120.00
GR	1327.30	5121.00	1327.60	5125.00	1327.80	5128.00	1328.10	5133.00	1327.90	5140.00
GR	1327.80	5145.00	1327.70	5150.00	1327.80	5153.00	1327.40	5161.00	1327.30	5162.00
GR	1327.20	5166.00	1327.20	5170.00	1327.40	5179.00	1327.40	5181.00	1327.50	5184.00
GR	1327.60	5188.00	1327.70	5189.00	1326.20	5197.00	1326.00	5199.00	1326.00	5203.00
GR	1326.40	5209.00	1326.50	5216.00	1326.60	5219.00	1325.60	5226.00	1325.50	5229.00
GR	1326.90	5235.00	1327.10	5244.00	1327.50	5251.00	1327.60	5255.00	1327.50	5260.00
GR	1327.50	5263.00	1327.60	5270.00	1327.50	5272.00	1327.60	5279.00	1327.80	5289.00
GR	1327.70	5291.00	1327.80	5298.00	1327.80	5301.00	1327.70	5308.00	1327.60	5310.00
GR	1327.60	5317.00	1327.60	5319.00	1326.90	5326.00	1326.20	5332.00	1325.90	5340.00
GR	1326.30	5349.00	1326.80	5359.00	1327.00	5360.00	1327.10	5365.00	1327.10	5366.00
GR	1327.10	5367.00	1327.20	5377.00	1327.00	5384.00	1327.00	5385.00	1327.00	5393.00
GR	1327.00	5394.00	1326.70	5403.00	1326.60	5412.00	1326.60	5413.00	1326.90	5422.00
GR	1326.70	5431.00	1326.80	5441.00	1326.80	5450.00	1327.00	5462.00	1326.70	5463.00
GR	1326.30	5468.00	1326.30	5469.00	1326.80	5478.00	1326.80	5487.00	1326.00	5496.00
GR	1326.00	5497.00	1326.40	5512.00	1326.80	5517.00	1327.20	5528.00	1327.40	5544.00
GR	1327.60	5560.00	1327.70	5563.00	1327.70	5564.00	1327.60	5576.00	1327.50	5588.00
GR	1327.80	5594.00	1327.40	5598.00	1327.50	5602.00	1327.60	5612.00	1327.80	5629.00
GR	1327.90	5635.00	1327.70	5637.00	1327.50	5643.00	1327.80	5650.00	1327.70	5652.00
GR	1327.40	5664.00	1327.10	5676.00	1327.60	5680.00	1328.00	5684.00	1327.90	5687.00
GR	1328.40	5701.00	1328.50	5704.00	1328.50	5705.00	1328.70	5707.00	1328.90	5714.00
GR	1328.80	5726.00	1329.00	5729.00	1329.30	5735.00	1329.30	5739.00	1329.30	5744.00

GR	1329.20	5748.00	1329.10	5753.00	1329.20	5757.00	1329.10	5766.00	1328.90	5771.00
GR	1328.60	5772.00	1328.20	5776.00	1328.90	5793.00	1329.45	5810.00	1330.00	5827.00
GR	1329.70	5830.00	1329.60	5832.00	1329.70	5834.00	1330.00	5835.00	1329.70	5838.00
GR	1329.50	5840.00	1329.60	5842.00	1329.40	5846.00	1329.30	5847.00	1329.30	5848.00
GR	1329.20	5850.00	1328.80	5852.00	1329.10	5854.00	1329.00	5855.00	1329.10	5857.00
GR	1329.00	5859.00	1329.00	5860.00	1329.10	5861.00	1329.10	5862.00	1329.10	5864.00
GR	1329.10	5865.00	1329.00	5866.00	1329.20	5868.00	1329.20	5870.00	1329.20	5872.00
GR	1329.20	5874.00	1329.20	5876.00	1329.40	5877.00	1329.80	5881.00	1330.10	5883.00
GR	1330.10	5887.00	1330.20	5890.00	1330.10	5892.00	1330.10	5895.00	1329.80	5896.00
GR	1330.10	5899.00	1330.00	5901.00	1330.10	5902.00	1330.10	5903.00	1330.10	5904.00
GR	1330.00	5905.00	1330.20	5907.00	1329.90	5911.00	1330.00	5912.00	1330.10	5914.00
GR	1330.00	5915.00	1330.00	5920.00	1330.10	5922.00	1330.10	5923.00	1330.30	5926.00
GR	1330.20	5928.00	1332.70	5930.00	1333.70	5931.00	1334.50	5933.00	1335.50	5934.00
GR	1336.80	5936.00	1337.20	5938.00						
X1	9595.00	403.00	4970.00	5028.00	87.00	133.00	92.00	0.00	0.00	0.00
X3										6.00
GR	1362.50	4151.00	1360.80	4154.00	1359.40	4157.00	1358.90	4158.00	1358.10	4160.00
GR	1356.90	4162.00	1356.30	4163.00	1353.30	4168.00	1351.70	4173.00	1351.00	4174.00
GR	1349.30	4179.00	1347.90	4183.00	1347.50	4184.00	1347.00	4185.00	1345.80	4188.00
GR	1345.10	4189.00	1344.00	4191.00	1339.80	4196.00	1338.20	4201.00	1335.10	4210.00
GR	1335.70	4219.00	1335.60	4220.00	1335.10	4223.00	1334.80	4229.00	1334.80	4230.00
GR	1334.50	4234.00	1334.50	4236.00	1334.20	4238.00	1334.20	4239.00	1334.00	4240.00
GR	1334.00	4244.00	1333.80	4246.00	1334.10	4248.00	1334.20	4249.00	1334.30	4251.00
GR	1334.40	4254.00	1334.60	4257.00	1334.60	4258.00	1334.30	4265.00	1334.30	4266.00
GR	1333.70	4268.00	1331.80	4275.00	1332.20	4277.00	1332.30	4280.00	1332.00	4282.00
GR	1332.20	4283.00	1331.80	4286.00	1331.50	4289.00	1331.70	4290.00	1331.60	4292.00
GR	1331.60	4293.00	1331.60	4296.00	1330.70	4300.00	1331.30	4302.00	1331.20	4303.00
GR	1331.40	4306.00	1331.20	4307.00	1331.00	4312.00	1330.70	4314.00	1330.60	4315.00
GR	1330.30	4318.00	1330.00	4321.00	1330.00	4322.00	1330.40	4324.00	1330.30	4325.00
GR	1330.40	4326.00	1330.50	4327.00	1330.70	4329.00	1330.40	4330.00	1329.20	4334.00
GR	1329.30	4335.00	1329.10	4345.00	1329.20	4348.00	1329.20	4349.00	1329.20	4350.00
GR	1329.90	4355.00	1330.30	4358.00	1330.20	4366.00	1330.10	4375.00	1330.00	4378.00
GR	1330.00	4380.00	1330.20	4385.00	1330.20	4388.00	1330.10	4395.00	1330.00	4398.00
GR	1329.80	4400.00	1329.20	4406.00	1329.10	4412.00	1329.40	4417.00	1329.50	4420.00
GR	1329.60	4425.00	1329.60	4426.00	1329.40	4434.00	1329.50	4436.00	1329.50	4438.00
GR	1329.40	4445.00	1329.80	4452.00	1329.90	4463.00	1329.80	4467.00	1329.60	4475.00
GR	1329.60	4482.00	1329.70	4484.00	1329.80	4490.00	1329.80	4493.00	1329.70	4499.00
GR	1329.80	4504.00	1329.80	4507.00	1329.50	4524.00	1329.50	4526.00	1329.50	4537.00
GR	1329.40	4541.00	1329.20	4545.00	1329.40	4547.00	1329.50	4562.50	1329.60	4578.00
GR	1329.70	4593.50	1329.80	4609.00	1329.80	4610.00	1329.80	4611.00	1329.70	4613.00
GR	1329.50	4615.00	1329.00	4624.00	1329.20	4634.00	1329.20	4636.00	1329.20	4646.00
GR	1329.20	4647.00	1329.20	4651.00	1329.20	4663.00	1329.20	4667.00	1329.30	4671.00
GR	1329.30	4673.00	1329.40	4676.00	1330.00	4683.00	1329.50	4688.00	1328.40	4695.00
GR	1328.10	4697.00	1328.30	4707.00	1328.40	4709.00	1328.50	4715.00	1328.60	4716.00
GR	1328.60	4717.00	1328.70	4724.00	1328.70	4727.00	1329.00	4730.00	1329.60	4733.00
GR	1330.10	4738.00	1330.10	4743.00	1330.60	4747.00	1330.50	4750.00	1330.10	4755.00
GR	1330.20	4763.00	1330.40	4768.00	1330.60	4771.00	1330.50	4778.00	1330.50	4779.00
GR	1330.30	4788.00	1330.40	4806.00	1330.90	4814.00	1331.00	4816.00	1331.40	4825.00
GR	1331.40	4826.00	1331.30	4833.00	1331.20	4838.00	1331.20	4840.00	1331.10	4844.00
GR	1331.10	4860.00	1331.10	4876.00	1331.10	4881.00	1331.20	4883.00	1331.80	4898.00
GR	1331.90	4902.00	1331.90	4903.00	1331.20	4908.00	1330.70	4911.00	1331.10	4919.00
GR	1330.90	4925.00	1330.80	4928.00	1331.00	4936.00	1331.00	4937.00	1330.80	4939.00
GR	1330.20	4951.00	1330.20	4957.00	1329.80	4965.00	1328.60	4970.00	1327.60	4974.00
GR	1325.40	4981.00	1324.50	4984.00	1324.10	4986.00	1323.20	4995.00	1323.20	5004.00
GR	1323.60	5005.00	1325.00	5012.00	1325.30	5013.00	1325.50	5015.00	1326.80	5021.00
GR	1327.60	5026.00	1328.00	5028.00	1328.20	5031.00	1328.10	5039.00	1328.50	5048.00
GR	1328.40	5051.00	1328.40	5057.00	1328.50	5059.00	1328.70	5066.00	1329.20	5073.00
GR	1329.30	5078.00	1329.00	5082.00	1328.90	5083.00	1328.60	5101.00	1328.80	5105.00
GR	1329.30	5107.00	1329.40	5109.00	1329.10	5117.00	1328.60	5121.00	1328.20	5124.00
GR	1328.60	5128.00	1328.10	5134.00	1327.70	5148.00	1327.20	5160.00	1327.30	5168.00
GR	1327.70	5176.00	1328.20	5181.00	1328.20	5183.00	1328.40	5187.00	1328.50	5196.00
GR	1328.50	5202.00	1328.70	5206.00	1328.80	5211.00	1328.90	5215.00	1328.60	5224.00
GR	1328.60	5230.00	1328.50	5234.00	1328.50	5243.00	1328.40	5249.00	1328.40	5253.00
GR	1328.50	5259.00	1328.60	5262.00	1328.40	5268.00	1328.40	5271.00	1328.50	5281.00
GR	1328.30	5290.00	1328.50	5296.00	1328.50	5299.00	1328.50	5306.00	1328.50	5309.00
GR	1328.60	5315.00	1328.60	5330.00	1328.60	5332.00	1328.60	5341.00	1328.60	5348.00
GR	1328.70	5350.00	1328.80	5353.00	1329.00	5362.00	1329.00	5365.00	1329.10	5372.00
GR	1329.20	5374.00	1329.00	5381.00	1328.90	5383.00	1329.00	5386.00	1328.90	5393.00
GR	1328.80	5395.00	1328.60	5397.00	1328.80	5400.00	1328.90	5407.00	1328.90	5410.00
GR	1328.80	5411.00	1328.60	5419.00	1329.00	5421.00	1330.10	5428.00	1330.00	5429.00
GR	1329.90	5432.00	1329.50	5439.00	1329.80	5447.00	1329.80	5449.00	1329.60	5453.00

GR	1329.80	5459.00	1329.20	5467.00	1328.80	5475.00	1328.70	5476.00	1327.90	5495.00
GR	1327.90	5503.00	1327.90	5505.00	1328.50	5517.50	1329.10	5530.00	1330.20	5545.00
GR	1329.50	5550.00	1329.50	5553.00	1329.80	5569.00	1329.80	5570.00	1328.80	5579.00
GR	1329.40	5587.00	1329.40	5588.00	1329.50	5590.00	1329.60	5592.00	1329.55	5603.50
GR	1329.50	5615.00	1329.50	5616.00	1329.50	5625.00	1329.40	5634.00	1329.80	5643.00
GR	1329.80	5662.00	1329.40	5671.00	1329.30	5689.00	1329.50	5698.00	1330.50	5707.00
GR	1330.70	5710.00	1330.70	5712.00	1330.60	5717.00	1330.80	5726.00	1330.60	5735.00
GR	1331.00	5744.00	1332.40	5753.00	1332.40	5754.00	1333.20	5762.00	1332.80	5770.00
GR	1332.90	5777.00	1332.80	5791.00	1333.10	5805.00	1333.10	5806.00	1332.80	5808.00
GR	1332.80	5817.00	1332.90	5825.00	1332.90	5826.00	1332.40	5835.00	1332.40	5837.00
GR	1332.40	5838.00	1331.90	5842.00	1331.80	5845.00	1332.00	5846.00	1331.90	5849.00
GR	1331.50	5853.00	1331.20	5854.00	1331.50	5855.00	1331.40	5857.00	1331.30	5859.00
GR	1331.10	5861.00	1331.00	5864.00	1331.00	5865.00	1330.90	5867.00	1330.70	5869.00
GR	1330.60	5872.00	1330.60	5873.00	1330.60	5877.00	1330.50	5879.00	1330.50	5880.00
GR	1330.40	5881.00	1330.40	5883.00	1330.60	5887.00	1330.30	5891.00	1330.50	5899.00
GR	1330.50	5900.00	1330.60	5908.00	1330.60	5909.00	1330.70	5912.00	1330.50	5914.00
GR	1330.60	5917.00	1330.30	5919.00	1329.90	5923.00	1330.70	5927.00	1330.70	5929.00
GR	1330.90	5930.00	1331.10	5931.00	1331.00	5934.00	1330.80	5936.00	1330.40	5938.00
GR	1330.60	5940.00	1331.20	5943.00	1331.40	5946.00	1331.60	5948.00	1331.50	5950.00
GR	1331.20	5951.00	1331.60	5952.00	1331.60	5956.00	1331.70	5960.00	1331.70	5961.00
GR	1331.80	5963.00	1331.60	5965.00	1331.70	5967.00	1331.70	5968.00	1331.90	5974.00
GR	1332.00	5975.00	1332.10	5978.00	1332.30	5981.00	1332.30	5983.00	1332.30	5985.00
GR	1332.50	5986.00	1332.70	5988.00	1332.90	5991.00	1333.10	5993.00	1333.60	5995.00
GR	1333.40	5996.00	1333.20	5999.00	1334.80	6002.00	1335.50	6004.00	1337.20	6007.00
GR	1338.80	6010.00	1340.80	6013.00	1342.30	6018.00	1342.70	6019.00	1343.30	6025.00
GR	1343.50	6027.00	1343.60	6028.00	1343.70	6030.00	1343.90	6033.00	1343.90	6035.00
GR	1344.30	6037.00	1344.70	6039.00	1345.40	6042.00	1347.10	6044.00		
X1	9885.00	367.00	4980.00	5033.00	290.00	309.00	290.00	0.00	0.00	0.00
X3										2.00
GR	1361.70	4410.00	1361.30	4411.00	1360.80	4412.00	1357.20	4422.00	1355.50	4427.00
GR	1353.60	4432.00	1352.70	4436.00	1352.30	4439.00	1349.70	4445.00	1349.10	4450.00
GR	1347.30	4456.00	1344.30	4463.00	1343.30	4468.00	1341.70	4473.00	1340.20	4477.00
GR	1339.20	4480.00	1336.60	4487.00	1335.70	4489.00	1334.60	4491.00	1333.90	4492.00
GR	1334.60	4496.00	1334.40	4498.00	1333.30	4505.00	1333.10	4511.00	1333.00	4514.00
GR	1332.90	4521.00	1332.90	4523.00	1332.90	4524.00	1333.10	4529.00	1333.20	4533.00
GR	1333.30	4535.00	1333.10	4539.00	1333.00	4543.00	1333.10	4546.00	1333.10	4552.00
GR	1333.10	4554.00	1333.30	4562.00	1333.20	4570.00	1333.30	4573.00	1333.40	4578.00
GR	1333.60	4583.00	1333.80	4586.00	1334.00	4594.00	1333.90	4597.00	1333.60	4602.00
GR	1333.70	4604.00	1333.80	4610.00	1333.70	4611.00	1333.70	4613.00	1334.50	4620.00
GR	1334.60	4623.00	1334.90	4628.00	1335.50	4633.00	1335.50	4634.00	1335.20	4636.00
GR	1334.40	4643.00	1334.30	4647.00	1333.70	4653.00	1333.70	4656.00	1333.90	4663.00
GR	1333.90	4664.00	1334.10	4672.00	1334.10	4674.00	1334.30	4681.00	1334.30	4686.00
GR	1334.40	4689.00	1333.90	4694.00	1333.90	4703.00	1333.70	4706.00	1333.60	4707.00
GR	1333.70	4708.00	1333.70	4710.00	1333.90	4717.00	1334.00	4718.00	1334.10	4721.00
GR	1334.20	4729.00	1334.20	4732.00	1334.10	4739.00	1334.10	4742.00	1334.00	4743.00
GR	1334.00	4744.00	1334.20	4746.00	1334.30	4751.00	1334.30	4757.00	1334.50	4760.00
GR	1334.40	4762.00	1334.50	4765.00	1334.30	4771.00	1333.90	4776.00	1333.40	4782.00
GR	1333.00	4797.00	1333.00	4798.00	1333.00	4799.00	1332.85	4812.50	1332.70	4826.00
GR	1333.70	4833.00	1333.70	4834.00	1333.70	4835.00	1333.70	4840.00	1333.80	4846.00
GR	1333.80	4848.00	1333.60	4856.00	1333.50	4860.00	1333.30	4866.00	1333.30	4874.00
GR	1333.20	4875.00	1333.10	4883.00	1333.10	4884.00	1332.90	4892.00	1332.80	4893.00
GR	1332.80	4894.00	1332.90	4904.00	1333.10	4906.00	1333.00	4910.00	1332.90	4919.00
GR	1333.10	4921.00	1333.20	4924.00	1333.00	4927.00	1332.40	4929.00	1332.20	4932.00
GR	1332.30	4938.00	1333.40	4948.00	1333.40	4949.00	1333.30	4950.00	1332.40	4957.00
GR	1332.80	4966.00	1332.80	4969.00	1331.80	4979.00	1331.70	4980.00	1327.80	4988.00
GR	1326.90	4990.00	1326.50	4993.00	1326.40	4994.00	1325.80	4995.00	1325.80	5005.00
GR	1326.30	5005.00	1326.50	5007.00	1326.50	5009.00	1328.60	5027.00	1328.70	5028.00
GR	1331.00	5033.00	1331.50	5039.00	1331.70	5043.00	1332.20	5049.00	1332.40	5050.00
GR	1332.60	5055.00	1332.10	5059.00	1331.80	5064.00	1331.40	5069.00	1331.60	5072.00
GR	1331.80	5076.00	1331.70	5084.00	1331.80	5093.00	1332.00	5098.00	1332.00	5102.00
GR	1332.00	5104.00	1331.80	5110.00	1331.80	5112.00	1331.80	5115.00	1332.00	5122.00
GR	1332.20	5128.00	1332.10	5133.00	1332.10	5137.00	1332.30	5144.00	1332.30	5145.00
GR	1332.30	5147.00	1332.20	5154.00	1332.20	5157.00	1332.30	5164.00	1332.00	5167.00
GR	1331.90	5169.00	1332.00	5180.00	1332.10	5182.00	1332.80	5191.00	1332.70	5196.00
GR	1332.60	5200.00	1332.50	5208.00	1332.50	5209.00	1332.70	5218.00	1332.90	5226.00
GR	1333.00	5234.00	1333.00	5235.00	1332.80	5243.00	1332.80	5244.00	1332.90	5252.00
GR	1332.90	5253.00	1332.90	5254.00	1332.80	5255.00	1332.60	5265.00	1333.60	5284.00
GR	1333.70	5285.00	1333.70	5286.00	1333.80	5288.00	1333.90	5298.00	1333.90	5299.00
GR	1333.80	5312.00	1333.80	5323.00	1333.80	5341.00	1333.90	5342.00	1333.70	5348.00
GR	1333.70	5360.00	1334.50	5370.00	1334.80	5379.00	1335.00	5396.50	1335.20	5414.00
GR	1335.50	5419.00	1334.90	5424.00	1334.70	5428.00	1334.90	5432.00	1334.90	5433.00

GR	1334.80	5438.00	1334.40	5441.00	1333.70	5448.00	1333.60	5450.00	1333.50	5451.00
GR	1333.40	5452.00	1333.30	5459.00	1333.20	5462.00	1333.30	5468.00	1333.30	5471.00
GR	1333.20	5476.00	1333.10	5481.00	1332.90	5485.00	1332.80	5490.00	1332.70	5494.00
GR	1332.60	5500.00	1332.40	5503.00	1332.30	5509.00	1332.40	5512.00	1332.40	5519.00
GR	1332.40	5521.00	1332.40	5528.00	1332.40	5530.00	1332.60	5538.00	1332.60	5539.00
GR	1332.60	5547.00	1332.60	5556.00	1332.60	5557.00	1332.70	5565.00	1332.70	5566.00
GR	1332.80	5574.00	1332.80	5575.00	1332.80	5576.00	1332.70	5583.00	1332.70	5584.00
GR	1332.70	5585.00	1332.80	5593.00	1332.70	5595.00	1332.30	5601.00	1332.20	5602.00
GR	1332.20	5605.00	1332.30	5610.00	1332.30	5611.00	1332.50	5614.00	1332.50	5619.00
GR	1332.40	5621.00	1332.00	5624.00	1331.70	5628.00	1331.80	5633.00	1331.60	5640.00
GR	1331.70	5643.00	1332.30	5648.00	1332.40	5652.00	1332.40	5654.00	1332.40	5657.00
GR	1332.40	5662.00	1332.30	5663.00	1332.20	5674.00	1332.20	5683.00	1332.20	5687.00
GR	1332.80	5692.00	1333.10	5711.00	1332.40	5725.00	1332.40	5726.00	1332.30	5728.00
GR	1332.20	5732.00	1332.20	5735.00	1332.30	5739.00	1332.20	5741.00	1332.10	5744.00
GR	1332.10	5747.00	1332.20	5748.00	1332.10	5750.00	1332.10	5753.00	1331.90	5756.00
GR	1331.90	5757.00	1331.80	5758.00	1331.80	5766.00	1331.80	5767.00	1331.60	5772.00
GR	1331.60	5775.00	1331.70	5781.00	1331.50	5784.00	1331.50	5785.00	1331.30	5790.00
GR	1331.20	5793.00	1331.20	5794.00	1331.20	5799.00	1331.40	5802.00	1331.40	5804.00
GR	1331.40	5808.00	1331.50	5811.00	1331.50	5813.00	1331.10	5817.00	1330.80	5819.00
GR	1330.70	5822.00	1331.40	5829.00	1331.40	5831.00	1331.50	5836.00	1331.40	5841.00
GR	1331.50	5843.00	1331.70	5860.00	1331.80	5862.00	1331.80	5863.00	1331.70	5871.00
GR	1331.70	5872.00	1331.90	5880.00	1332.00	5881.00	1331.90	5889.00	1331.90	5892.00
GR	1332.10	5911.00	1332.10	5914.00	1332.20	5916.00	1332.20	5918.00	1332.20	5919.00
GR	1332.30	5923.00	1332.40	5924.00	1332.40	5928.00	1332.90	5931.00	1332.90	5932.00
GR	1333.00	5933.00	1333.10	5934.00	1332.80	5937.00	1332.70	5939.00	1332.60	5941.00
GR	1333.10	5943.00	1333.10	5944.00	1333.00	5945.00	1332.40	5947.00	1332.30	5949.00
GR	1332.30	5951.00	1332.30	5952.00	1333.20	5952.00	1334.20	5954.00	1334.20	5958.00
GR	1334.70	5959.00	1336.20	5962.00	1336.40	5963.00	1336.80	5966.00	1337.10	5968.00
GR	1337.30	5969.00	1337.90	5970.00	1340.00	5974.00	1341.20	5976.00	1341.70	5978.00
GR	1343.70	5981.00	1344.80	5982.00	1345.80	5984.00	1347.10	5985.00	1348.90	5987.00
GR	1350.20	5988.00	1352.20	5991.00	1353.30	5993.00	1354.90	5995.00	1355.20	5995.00
GR	1359.10	6001.00	1359.80	6002.00	1360.20	6003.00	1361.40	6005.00		
X1	10056.00	356.00	4981.00	5052.00	173.00	146.00	171.00	0.00	0.00	0.00
X3										3.00
GR	1346.10	4443.00	1346.00	4443.00	1340.00	4450.00	1339.40	4451.00	1339.50	4452.00
GR	1340.90	4460.00	1340.40	4464.00	1340.10	4468.00	1340.20	4475.00	1340.20	4477.00
GR	1339.90	4485.00	1339.80	4486.00	1339.20	4494.00	1339.20	4497.00	1339.40	4503.00
GR	1339.40	4510.00	1339.40	4511.00	1339.20	4515.00	1339.10	4520.00	1339.10	4521.00
GR	1337.80	4529.00	1336.70	4536.00	1336.60	4540.00	1336.50	4542.00	1336.30	4545.00
GR	1336.00	4557.00	1336.00	4560.00	1336.30	4565.00	1335.40	4573.00	1335.00	4577.00
GR	1335.60	4582.00	1336.00	4583.00	1336.00	4585.00	1336.10	4600.00	1336.20	4607.00
GR	1336.20	4619.00	1335.10	4626.00	1335.00	4628.00	1335.10	4635.00	1335.20	4636.00
GR	1335.20	4637.00	1335.90	4652.00	1336.00	4654.00	1336.00	4655.00	1336.10	4658.00
GR	1336.30	4670.00	1336.50	4678.00	1336.50	4682.00	1336.70	4687.00	1336.60	4694.00
GR	1336.70	4696.00	1336.70	4704.00	1336.70	4705.00	1336.80	4713.00	1336.80	4717.00
GR	1336.70	4722.00	1336.40	4729.00	1336.40	4730.00	1335.80	4738.00	1335.80	4740.00
GR	1335.30	4747.00	1335.10	4751.00	1335.20	4755.00	1335.50	4761.00	1335.50	4764.00
GR	1335.50	4772.00	1335.20	4779.00	1335.20	4782.00	1335.10	4784.00	1335.10	4798.00
GR	1335.20	4800.00	1335.20	4801.00	1335.40	4805.00	1335.50	4809.00	1335.50	4810.00
GR	1335.80	4817.00	1335.70	4820.00	1335.50	4825.00	1335.50	4831.00	1335.40	4833.00
GR	1335.50	4841.00	1335.50	4842.00	1335.60	4848.00	1335.70	4850.00	1335.90	4862.00
GR	1335.90	4871.00	1336.20	4888.00	1336.00	4889.00	1335.60	4893.00	1335.60	4895.00
GR	1335.60	4899.00	1335.50	4902.00	1335.20	4908.00	1335.20	4917.00	1335.10	4922.00
GR	1334.90	4926.00	1334.80	4931.00	1334.60	4936.00	1334.70	4941.00	1334.90	4951.00
GR	1335.00	4954.00	1334.70	4961.00	1334.50	4964.00	1334.20	4970.00	1334.00	4973.00
GR	1333.50	4978.00	1333.20	4981.00	1331.50	4986.00	1329.50	4991.00	1328.20	4994.00
GR	1327.10	4995.00	1327.20	5005.00	1327.70	5009.00	1327.80	5010.00	1330.50	5019.00
GR	1330.80	5029.00	1330.90	5030.00	1331.70	5038.00	1332.30	5047.00	1332.60	5049.00
GR	1333.70	5052.00	1333.80	5053.00	1333.70	5054.00	1333.50	5056.00	1333.30	5057.00
GR	1333.40	5058.00	1333.50	5066.00	1333.50	5068.00	1333.50	5075.00	1333.50	5076.00
GR	1333.50	5087.00	1333.10	5101.00	1333.00	5103.00	1332.90	5104.00	1332.80	5113.00
GR	1332.70	5118.00	1332.90	5122.00	1333.30	5127.00	1333.40	5131.00	1333.60	5141.00
GR	1334.70	5147.00	1334.50	5153.00	1334.50	5159.00	1334.30	5163.00	1334.20	5166.00
GR	1334.20	5169.00	1334.30	5176.00	1334.20	5178.00	1334.30	5186.00	1334.30	5187.00
GR	1334.30	5196.00	1334.30	5197.00	1334.20	5205.00	1334.10	5206.00	1334.40	5212.00
GR	1334.60	5215.00	1334.60	5219.00	1334.40	5234.00	1334.20	5246.50	1334.00	5259.00
GR	1333.90	5264.00	1334.30	5274.00	1335.30	5279.00	1334.90	5283.00	1334.90	5289.00
GR	1335.40	5296.00	1335.60	5298.00	1335.50	5301.00	1335.20	5305.00	1335.00	5308.00
GR	1335.60	5323.00	1335.70	5324.00	1335.80	5326.00	1335.80	5327.00	1335.20	5335.00
GR	1335.30	5336.00	1335.40	5339.00	1335.40	5349.00	1335.50	5360.50	1335.60	5372.00
GR	1335.50	5377.00	1335.40	5381.00	1335.60	5386.00	1335.40	5396.00	1335.10	5401.00

GR	1335.30	5405.00	1335.30	5411.00	1335.20	5415.00	1335.10	5421.00	1334.80	5437.00
GR	1334.70	5441.00	1334.80	5446.00	1335.10	5458.50	1335.40	5471.00	1334.90	5482.00
GR	1334.80	5483.00	1334.80	5488.00	1334.80	5490.00	1334.80	5500.00	1334.80	5512.00
GR	1335.00	5526.00	1335.00	5528.00	1334.90	5531.00	1334.90	5535.00	1334.70	5553.00
GR	1334.70	5559.00	1334.70	5560.00	1334.70	5561.00	1334.80	5569.00	1334.70	5571.00
GR	1334.60	5574.00	1334.70	5577.00	1334.70	5580.00	1334.80	5586.00	1335.10	5590.00
GR	1335.00	5596.00	1335.10	5599.00	1335.10	5602.00	1335.00	5611.00	1335.00	5612.00
GR	1335.30	5620.00	1335.20	5621.00	1334.40	5632.00	1334.50	5647.00	1334.70	5653.00
GR	1334.20	5660.00	1334.80	5667.00	1334.90	5669.00	1334.80	5670.00	1334.60	5674.00
GR	1334.30	5686.00	1334.30	5687.00	1334.60	5695.00	1334.60	5696.00	1334.60	5701.00
GR	1334.50	5704.00	1334.40	5713.00	1334.40	5714.00	1334.40	5722.00	1334.40	5724.00
GR	1334.20	5731.00	1334.20	5734.00	1334.30	5739.00	1334.30	5744.00	1334.30	5748.00
GR	1334.20	5754.00	1334.10	5757.00	1334.00	5764.00	1334.00	5766.00	1334.00	5774.00
GR	1334.00	5775.00	1333.80	5782.00	1333.80	5784.00	1333.70	5793.00	1333.70	5795.00
GR	1333.10	5802.00	1332.90	5803.00	1332.80	5812.00	1332.80	5820.00	1333.60	5828.00
GR	1333.60	5829.00	1333.70	5838.00	1334.30	5846.00	1334.40	5847.00	1334.40	5855.00
GR	1334.40	5858.00	1334.40	5865.00	1334.50	5868.00	1334.40	5874.00	1334.50	5878.00
GR	1334.70	5883.00	1334.50	5888.00	1334.60	5892.00	1334.70	5898.00	1334.70	5900.00
GR	1335.10	5908.00	1335.20	5909.00	1335.30	5918.00	1335.30	5922.00	1335.40	5927.00
GR	1335.40	5928.00	1335.70	5930.00	1335.80	5933.00	1335.80	5934.00	1335.80	5935.00
GR	1335.50	5936.00	1335.50	5937.00	1336.00	5941.00	1335.80	5943.00	1335.80	5945.00
GR	1335.60	5947.00	1335.70	5949.00	1335.70	5950.00	1335.80	5952.00	1336.10	5953.00
GR	1336.20	5955.00	1336.00	5957.00	1336.10	5959.00	1336.10	5960.00	1336.20	5961.00
GR	1336.30	5963.00	1336.50	5965.00	1336.50	5967.00	1336.10	5968.00	1335.90	5969.00
GR	1336.00	5980.00	1336.10	5981.00	1336.20	5985.00	1336.20	5986.00	1336.20	5987.00
GR	1336.30	5993.00	1336.30	5994.00	1336.30	5995.00	1336.40	6005.00	1336.50	6006.00
GR	1336.50	6007.00	1338.10	6009.00	1337.90	6011.00	1338.60	6012.00	1338.90	6014.00
GR	1338.90	6015.00	1339.30	6018.00	1339.50	6020.00	1340.10	6023.00	1341.20	6029.00
GR	1341.50	6031.00	1340.90	6032.00	1340.60	6033.00	1341.60	6037.00	1346.80	6042.00
GR	1347.00	6043.00	1346.90	6046.00	1346.50	6048.00	1346.90	6049.00	1347.40	6052.00
GR	1347.70	6053.00	1347.80	6058.00	1347.90	6059.00	1347.80	6061.00	1348.20	6062.00
GR	1348.60	6065.00	1348.40	6069.00	1348.40	6070.00	1349.10	6074.00	1349.30	6078.00
GR	1349.60	6080.00	1350.10	6083.00	1350.10	6085.00	1350.20	6086.00	1349.10	6089.00
GR	1349.40	6090.00	1349.90	6091.00	1351.40	6096.00	1353.00	6100.00	1354.70	6104.00
GR	1355.10	6105.00	1356.20	6107.00	1358.00	6112.00	1358.60	6113.00		
X1	10178.00	329.00	4952.00	5034.00	126.00	118.00	122.00	0.00	0.00	0.00
X3										4.00
GR	1341.20	4549.00	1341.10	4556.00	1341.20	4557.00	1341.20	4561.00	1341.10	4564.00
GR	1341.30	4568.00	1341.40	4572.00	1341.40	4577.00	1341.30	4579.00	1341.20	4580.00
GR	1340.80	4588.00	1340.60	4594.00	1340.40	4596.00	1340.30	4601.00	1340.10	4604.00
GR	1340.10	4606.00	1339.70	4618.00	1339.90	4626.00	1339.90	4630.00	1339.40	4635.00
GR	1339.15	4645.50	1338.90	4656.00	1338.90	4657.00	1338.80	4658.00	1338.40	4665.00
GR	1338.30	4667.00	1338.30	4671.00	1338.30	4677.00	1338.30	4678.00	1338.20	4680.00
GR	1338.10	4684.00	1338.20	4687.00	1338.10	4691.00	1337.70	4697.00	1337.70	4703.00
GR	1337.80	4710.00	1337.70	4716.00	1337.60	4717.00	1337.60	4718.00	1337.40	4725.00
GR	1337.20	4729.00	1337.10	4733.00	1337.00	4738.00	1337.00	4741.00	1337.00	4743.00
GR	1336.70	4750.00	1336.50	4758.00	1336.50	4759.00	1336.50	4760.00	1336.40	4766.00
GR	1336.40	4768.00	1336.30	4772.00	1336.20	4774.00	1336.10	4778.00	1336.10	4782.00
GR	1336.00	4785.00	1335.80	4787.00	1335.80	4790.00	1335.60	4797.00	1335.60	4798.00
GR	1335.60	4799.00	1335.40	4804.00	1335.40	4807.00	1335.40	4811.00	1335.30	4818.00
GR	1335.30	4825.00	1335.20	4828.00	1335.10	4832.00	1335.10	4839.00	1334.90	4845.00
GR	1334.90	4850.00	1334.90	4852.00	1334.80	4855.00	1334.70	4859.00	1334.70	4861.00
GR	1334.60	4871.00	1334.60	4872.00	1334.70	4875.00	1334.70	4882.00	1334.70	4887.00
GR	1334.70	4894.00	1334.80	4895.00	1334.80	4903.00	1334.80	4909.00	1334.70	4912.00
GR	1334.70	4916.00	1334.50	4921.00	1334.10	4925.00	1333.70	4929.00	1333.40	4933.00
GR	1333.40	4938.00	1333.20	4939.00	1333.20	4945.00	1333.20	4952.00	1333.10	4953.00
GR	1332.70	4961.00	1332.20	4971.00	1331.10	4978.00	1330.60	4982.00	1330.40	4985.00
GR	1329.00	4992.00	1329.00	4993.00	1328.40	5000.00	1328.40	5005.00	1328.40	5006.00
GR	1329.00	5008.00	1330.80	5013.00	1331.50	5018.00	1331.90	5021.00	1332.40	5025.00
GR	1334.10	5034.00	1334.50	5041.00	1335.60	5048.00	1335.60	5056.00	1335.70	5065.00
GR	1336.00	5073.00	1336.50	5081.00	1336.50	5082.00	1336.60	5086.00	1336.70	5091.00
GR	1336.60	5099.00	1336.60	5101.00	1336.60	5107.00	1336.50	5110.00	1336.50	5115.00
GR	1336.50	5120.00	1336.50	5123.00	1336.50	5129.00	1336.40	5131.00	1336.40	5138.00
GR	1336.40	5139.00	1336.50	5146.00	1336.50	5148.00	1336.30	5156.00	1336.30	5158.00
GR	1336.20	5165.00	1336.20	5167.00	1336.20	5171.00	1336.10	5186.00	1336.10	5193.00
GR	1336.20	5200.00	1336.20	5201.00	1336.30	5205.00	1336.40	5210.00	1336.40	5211.00
GR	1336.40	5219.00	1336.50	5222.00	1336.70	5228.00	1336.70	5232.00	1336.60	5237.00
GR	1336.60	5243.00	1336.70	5247.00	1336.70	5254.00	1336.80	5256.00	1337.00	5265.00
GR	1337.00	5266.00	1337.20	5274.00	1337.10	5276.00	1336.70	5281.00	1336.70	5284.00
GR	1336.70	5289.00	1336.50	5293.00	1336.80	5299.00	1336.90	5302.00	1337.00	5310.00
GR	1337.00	5312.00	1336.50	5321.00	1336.75	5333.50	1337.00	5346.00	1336.80	5349.00

```
GR  1336.90  5351.00  1336.80  5358.00  1337.40  5363.00  1337.60  5364.00  1337.60  5371.00
GR  1337.60  5376.00  1337.50  5381.00  1337.40  5383.00  1337.10  5389.00  1337.10  5392.00
GR  1337.10  5398.00  1337.00  5402.00  1337.00  5412.00  1337.00  5414.00  1337.00  5422.00
GR  1337.00  5423.00  1337.20  5429.00  1337.30  5431.00  1337.90  5445.00  1338.10  5449.00
GR  1338.00  5451.00  1337.70  5456.00  1337.60  5460.00  1337.50  5464.00  1337.40  5470.00
GR  1337.30  5479.00  1337.30  5480.00  1337.40  5484.00  1337.70  5489.00  1337.80  5495.00
GR  1337.60  5503.00  1337.20  5507.00  1337.70  5515.00  1338.10  5532.00  1338.05  5544.50
GR  1338.00  5557.00  1338.20  5573.00  1338.20  5579.00  1337.80  5590.00  1337.60  5593.00
GR  1337.90  5596.00  1337.10  5601.00  1337.00  5603.00  1336.80  5606.00  1336.90  5607.00
GR  1336.90  5609.00  1336.80  5619.00  1336.40  5634.00  1335.90  5640.00  1335.80  5642.00
GR  1335.80  5651.00  1336.00  5653.00  1336.10  5656.00  1336.10  5658.00  1336.35  5676.50
GR  1336.60  5695.00  1336.40  5698.00  1336.30  5699.00  1336.40  5704.00  1335.80  5718.00
GR  1335.70  5722.00  1335.90  5726.00  1335.40  5730.00  1335.10  5744.00  1336.40  5762.00
GR  1336.50  5763.00  1336.40  5766.00  1335.80  5782.00  1335.60  5785.00  1335.50  5787.00
GR  1335.40  5792.00  1335.70  5800.00  1335.80  5801.00  1335.90  5804.00  1336.30  5810.00
GR  1336.10  5812.00  1336.00  5817.00  1336.20  5823.00  1335.90  5833.00  1335.20  5843.00
GR  1335.20  5847.00  1334.90  5852.00  1335.10  5857.00  1335.60  5860.00  1335.80  5866.00
GR  1335.90  5869.00  1336.00  5876.00  1336.00  5877.00  1336.80  5885.00  1337.10  5893.00
GR  1337.10  5895.00  1337.20  5901.00  1337.30  5905.00  1337.10  5909.00  1337.00  5912.00
GR  1336.70  5914.00  1336.20  5917.00  1336.30  5921.00  1337.80  5923.00  1341.30  5929.00
GR  1341.70  5930.00  1342.60  5931.00  1343.90  5934.00  1344.40  5935.00  1345.10  5937.00
GR  1346.20  5939.00  1346.70  5941.00  1347.20  5942.00  1348.60  5944.00  1349.30  5946.00
GR  1350.40  5949.00  1351.40  5951.00  1354.30  5957.00  1355.20  5959.00  1355.60  5960.00
GR  1358.00  5965.00  1358.70  5967.00  1358.90  5968.00  1360.80  5972.00  1362.00  5977.00
GR  1362.30  5980.00  1362.60  5982.00  1363.20  5988.00  1363.30  5990.00  1362.90  5997.00
GR  1362.90  5998.00  1363.70  6003.00  1363.80  6004.00  1363.90  6007.00  1364.00  6008.00
GR  1364.30  6011.00  1364.30  6013.00  1364.30  6014.00  1364.30  6016.00  1364.30  6017.00
GR  1364.30  6019.00  1364.60  6023.00  1364.60  6024.00  1364.70  6025.00  1364.70  6029.00
GR  1364.80  6033.00  1364.80  6035.00  1365.20  6041.00  1365.00  6042.00  1365.10  6044.00
GR  1364.90  6046.00  1364.70  6049.00  1364.70  6051.00  1364.80  6053.00  1365.10  6054.00
GR  1365.50  6056.00  1365.20  6058.00  1366.60  6058.00  1367.70  6058.00  1368.10  6061.00
GR  1368.30  6062.00  1368.70  6063.00  1368.50  6068.00  1368.80  6069.00  1370.40  6076.00
GR  1370.60  6077.00  1370.70  6078.00  1371.30  6083.00
X1 10196.00   320.00  4943.00  5042.00    18.00    17.00    18.00     0.00     0.00     0.00
X3                                                                                       3.00
GR  1342.00  4519.00  1342.00  4520.00  1341.90  4524.00  1340.90  4532.00  1340.80  4533.00
GR  1340.80  4534.00  1340.70  4541.00  1340.80  4548.00  1341.00  4558.00  1340.90  4561.00
GR  1340.80  4566.00  1341.00  4574.00  1340.90  4575.00  1340.70  4583.00  1340.40  4590.00
GR  1340.40  4592.00  1340.60  4598.00  1340.50  4603.00  1340.60  4605.00  1339.60  4610.00
GR  1339.40  4612.00  1339.20  4614.00  1338.90  4619.00  1339.20  4622.00  1338.70  4641.00
GR  1338.90  4643.00  1338.60  4656.00  1338.50  4665.00  1338.50  4669.00  1338.70  4677.00
GR  1338.40  4686.00  1338.00  4690.00  1337.70  4694.00  1337.90  4698.00  1338.30  4702.00
GR  1338.30  4706.00  1338.70  4716.00  1338.50  4719.00  1339.10  4728.00  1337.80  4736.00
GR  1337.80  4747.00  1337.60  4754.00  1337.50  4758.00  1337.20  4766.00  1337.10  4767.00
GR  1337.00  4768.00  1336.70  4773.00  1336.80  4778.00  1336.90  4782.00  1337.10  4786.00
GR  1337.10  4787.00  1337.10  4792.00  1337.00  4797.00  1337.00  4799.00  1337.00  4802.00
GR  1336.90  4806.00  1336.90  4809.00  1336.80  4814.00  1336.40  4822.00  1336.40  4823.00
GR  1336.40  4829.00  1336.60  4831.00  1336.20  4834.00  1335.80  4846.00  1335.70  4851.00
GR  1335.50  4862.00  1335.30  4869.00  1335.20  4872.00  1335.00  4881.00  1334.70  4889.00
GR  1334.70  4892.00  1334.40  4903.00  1334.00  4911.00  1333.90  4913.00  1333.70  4920.00
GR  1333.60  4922.00  1333.40  4930.00  1333.30  4933.00  1333.20  4934.00  1333.00  4940.00
GR  1332.80  4943.00  1332.20  4953.00  1331.80  4961.00  1331.30  4965.00  1331.00  4968.00
GR  1330.70  4972.00  1330.40  4976.00  1330.20  4979.00  1329.60  4986.00  1328.80  4990.00
GR  1329.00  4994.00  1328.80  4995.00  1328.80  5004.00  1329.00  5005.00  1329.20  5006.00
GR  1329.70  5009.00  1330.00  5011.00  1330.10  5012.00  1330.60  5018.00  1331.30  5025.00
GR  1331.30  5026.00  1331.40  5027.00  1332.30  5035.00  1332.70  5037.00  1333.90  5042.00
GR  1333.40  5044.00  1333.20  5045.00  1333.00  5053.00  1333.00  5054.00  1333.70  5059.00
GR  1335.60  5071.00  1335.80  5073.00  1336.00  5077.00  1336.40  5082.00  1336.50  5090.00
GR  1336.50  5092.00  1336.70  5098.00  1336.70  5101.00  1336.50  5109.00  1336.60  5110.00
GR  1336.60  5112.00  1336.60  5118.00  1336.50  5119.00  1336.60  5122.00  1336.60  5127.00
GR  1336.50  5129.00  1336.60  5132.00  1336.60  5136.00  1336.60  5138.00  1336.70  5143.00
GR  1336.70  5144.00  1336.70  5147.00  1336.70  5153.00  1336.70  5156.00  1336.60  5160.00
GR  1336.80  5163.00  1336.50  5171.00  1336.30  5179.00  1336.30  5181.00  1336.30  5184.00
GR  1336.30  5185.00  1337.00  5193.00  1337.10  5194.00  1336.60  5205.00  1336.50  5207.00
GR  1336.60  5210.00  1336.90  5226.00  1337.30  5230.00  1337.40  5231.00  1337.30  5236.00
GR  1337.30  5241.00  1337.40  5244.00  1337.50  5250.00  1337.50  5253.00  1337.70  5260.00
GR  1337.70  5261.00  1337.50  5267.00  1337.40  5269.00  1337.40  5270.00  1337.10  5278.00
GR  1337.10  5280.00  1336.60  5287.00  1336.70  5290.00  1337.30  5296.00  1337.50  5300.00
GR  1337.30  5305.00  1337.40  5311.00  1337.50  5313.00  1337.40  5321.00  1337.60  5322.00
GR  1337.40  5323.00  1337.20  5342.00  1337.35  5352.50  1337.50  5363.00  1336.80  5370.00
GR  1336.80  5372.00  1337.20  5382.00  1337.00  5386.00  1336.80  5389.00  1337.20  5397.00
```

```
GR  1337.30  5398.00  1337.30  5400.00  1337.30  5406.00  1337.40  5411.00  1337.50  5415.00
GR  1337.40  5421.00  1337.40  5424.00  1337.90  5432.00  1338.00  5433.00  1337.80  5440.00
GR  1337.70  5442.00  1337.70  5443.00  1337.40  5451.00  1337.60  5453.00  1337.90  5460.00
GR  1337.70  5464.00  1337.60  5468.00  1337.70  5474.00  1337.60  5477.00  1337.80  5485.00
GR  1337.90  5486.00  1337.40  5493.00  1337.20  5495.00  1338.40  5514.00  1338.70  5524.00
GR  1338.60  5538.00  1338.50  5552.00  1338.40  5566.00  1338.40  5568.00  1338.50  5569.00
GR  1338.40  5576.00  1338.50  5580.00  1338.90  5585.00  1338.20  5590.00  1337.50  5594.00
GR  1337.10  5601.00  1337.10  5603.00  1335.80  5611.00  1335.60  5612.00  1335.90  5620.00
GR  1335.70  5621.00  1335.70  5628.00  1336.00  5630.00  1336.10  5631.00  1336.50  5640.00
GR  1336.20  5646.00  1335.90  5650.00  1336.20  5661.00  1336.40  5669.00  1336.50  5676.00
GR  1336.20  5681.00  1335.60  5692.00  1335.90  5700.00  1335.80  5708.00  1335.80  5709.00
GR  1335.80  5710.00  1336.00  5713.00  1336.80  5721.00  1336.80  5724.00  1337.00  5728.00
GR  1336.90  5729.00  1336.80  5748.00  1336.90  5752.00  1336.70  5761.00  1336.10  5766.00
GR  1335.40  5778.00  1335.40  5780.00  1336.10  5787.00  1335.70  5797.00  1336.50  5806.00
GR  1336.60  5811.00  1336.70  5816.00  1336.40  5825.00  1335.60  5834.00  1335.00  5842.00
GR  1335.50  5845.00  1336.00  5851.00  1336.00  5852.00  1336.10  5860.00  1336.20  5862.00
GR  1336.50  5868.00  1336.70  5872.00  1337.00  5877.00  1336.80  5882.00  1336.70  5883.00
GR  1336.60  5885.00  1336.20  5889.00  1336.20  5892.00  1336.30  5900.00  1336.60  5902.00
GR  1336.90  5903.00  1336.60  5905.00  1336.30  5907.00  1339.40  5911.00  1339.70  5912.00
GR  1343.20  5919.00  1343.70  5920.00  1344.50  5921.00  1345.50  5923.00  1347.20  5926.00
GR  1348.80  5929.00  1351.70  5935.00  1353.20  5938.00  1355.40  5942.00  1357.60  5946.00
GR  1358.40  5948.00  1360.70  5953.00  1361.30  5955.00  1361.70  5957.00  1362.60  5961.00
GR  1363.50  5964.00  1363.90  5970.00  1363.60  5973.00  1363.60  5974.00  1363.60  5981.00
GR  1363.70  5982.00  1363.70  5983.00  1363.90  5989.00  1364.00  5990.00  1363.60  5991.00
GR  1363.60  5998.00  1364.80  6000.00  1364.90  6005.00  1364.80  6007.00  1364.90  6008.00
GR  1365.10  6015.00  1365.30  6016.00  1365.60  6024.00  1365.50  6025.00  1364.80  6031.00
GR  1365.10  6034.00  1365.10  6038.00  1364.10  6041.00  1364.20  6047.00  1365.40  6050.00
GR  1366.00  6053.00  1366.10  6056.00  1366.00  6058.00  1365.70  6059.00  1366.60  6060.00
GR  1369.60  6063.00  1371.40  6068.00  1372.20  6071.00
X1 10219.00   329.00  4947.00  5028.00    24.00    18.00    23.00     0.00     0.00     0.00
X3                                                                                      2.00
GR  1347.80  4499.00  1347.20  4500.00  1345.40  4504.00  1342.30  4510.00  1341.80  4511.00
GR  1341.70  4515.00  1341.80  4521.00  1340.70  4529.00  1340.60  4530.00  1340.20  4537.00
GR  1340.10  4540.00  1340.00  4544.00  1340.00  4550.00  1340.10  4551.00  1340.00  4553.00
GR  1340.20  4559.00  1340.10  4560.00  1340.00  4567.00  1340.20  4571.00  1340.20  4575.00
GR  1340.40  4577.00  1340.80  4583.00  1340.80  4590.00  1340.90  4592.00  1341.00  4594.00
GR  1341.00  4599.00  1341.00  4601.00  1340.20  4607.00  1340.10  4611.00  1340.00  4614.00
GR  1339.80  4616.00  1339.40  4622.00  1339.20  4629.00  1339.20  4631.00  1339.40  4633.00
GR  1339.80  4639.00  1339.40  4645.00  1339.00  4648.00  1338.80  4651.00  1338.50  4656.00
GR  1338.50  4659.00  1338.70  4665.00  1338.90  4672.00  1338.90  4673.00  1338.80  4675.00
GR  1338.60  4681.00  1338.80  4689.00  1338.80  4690.00  1339.50  4697.00  1339.30  4701.00
GR  1338.90  4704.00  1339.00  4711.00  1339.00  4712.00  1339.10  4718.00  1339.10  4723.00
GR  1339.10  4726.00  1339.40  4731.00  1339.50  4733.00  1339.50  4734.00  1339.50  4740.00
GR  1339.60  4744.00  1339.70  4745.00  1339.90  4751.00  1340.10  4757.00  1340.10  4761.00
GR  1339.40  4776.00  1339.20  4777.00  1339.30  4784.00  1339.10  4790.00  1339.20  4799.00
GR  1339.20  4801.00  1339.20  4810.00  1339.20  4811.00  1338.90  4823.00  1338.90  4827.00
GR  1338.90  4829.00  1338.80  4834.00  1338.70  4837.00  1338.40  4841.00  1338.20  4847.00
GR  1338.10  4848.00  1338.20  4849.00  1338.10  4853.00  1338.00  4856.00  1338.00  4865.00
GR  1337.80  4870.00  1337.60  4876.00  1336.80  4888.00  1336.60  4893.00  1336.30  4901.00
GR  1335.90  4905.00  1335.20  4915.00  1335.10  4916.00  1334.90  4918.00  1334.70  4926.00
GR  1334.60  4928.00  1334.20  4938.00  1334.10  4947.00  1333.80  4951.00  1333.50  4954.00
GR  1333.20  4956.00  1332.00  4963.00  1330.70  4973.00  1330.20  4977.00  1329.40  4985.00
GR  1329.10  4988.00  1328.90  4995.00  1328.90  5005.00  1329.00  5005.00  1329.70  5006.00
GR  1330.10  5009.00  1331.90  5015.00  1332.00  5017.00  1333.30  5025.00  1333.70  5028.00
GR  1333.70  5031.00  1333.60  5038.00  1333.90  5040.00  1334.10  5040.00  1334.10  5042.00
GR  1335.00  5047.00  1335.40  5053.00  1335.50  5058.00  1335.50  5062.00  1334.90  5073.00
GR  1334.90  5074.00  1336.00  5083.00  1336.00  5084.00  1336.00  5089.00  1335.80  5094.00
GR  1335.90  5098.00  1335.80  5103.00  1337.40  5113.00  1337.80  5117.00  1338.30  5120.00
GR  1338.30  5121.00  1338.30  5122.00  1337.20  5130.00  1337.50  5134.00  1337.40  5136.00
GR  1337.40  5139.00  1337.50  5142.00  1337.40  5144.00  1337.40  5150.00  1336.80  5166.00
GR  1336.80  5179.00  1336.80  5187.00  1336.80  5190.00  1336.90  5198.00  1336.50  5203.00
GR  1336.80  5213.00  1336.80  5215.00  1336.70  5220.00  1337.30  5225.00  1337.70  5230.00
GR  1337.90  5233.00  1338.00  5235.00  1338.10  5238.00  1338.10  5245.00  1338.00  5246.00
GR  1338.00  5247.00  1337.90  5256.00  1337.90  5258.00  1337.80  5264.00  1337.70  5266.00
GR  1337.40  5272.00  1337.30  5276.00  1337.10  5281.00  1337.00  5284.00  1337.10  5288.00
GR  1337.20  5293.00  1337.20  5294.00  1337.20  5295.00  1337.50  5306.00  1337.60  5323.00
GR  1337.40  5336.00  1337.55  5348.50  1337.70  5361.00  1337.70  5367.00  1337.50  5373.00
GR  1336.60  5382.00  1336.40  5387.00  1336.80  5390.00  1337.70  5393.00  1337.70  5401.00
GR  1337.70  5402.00  1337.70  5403.00  1337.50  5421.00  1337.00  5426.00  1338.30  5432.00
GR  1338.70  5439.00  1338.30  5449.00  1338.20  5450.00  1338.20  5452.00  1338.00  5460.00
GR  1338.00  5461.00  1337.90  5469.00  1338.00  5470.00  1338.20  5477.00  1338.30  5480.00
```

```
GR  1338.50  5486.00  1338.60  5490.00  1338.70  5491.00  1339.00  5499.00  1338.80  5501.00
GR  1338.80  5508.00  1339.20  5513.00  1339.20  5515.00  1339.20  5527.00  1339.05  5540.50
GR  1338.90  5554.00  1339.10  5557.00  1339.00  5561.00  1339.00  5564.00  1338.90  5569.00
GR  1338.80  5572.00  1338.60  5578.00  1338.50  5581.00  1337.70  5589.00  1337.10  5598.00
GR  1336.40  5607.00  1336.30  5608.00  1336.40  5613.00  1336.00  5622.00  1335.80  5625.00
GR  1336.30  5631.00  1336.70  5635.00  1336.40  5641.00  1336.20  5644.00  1336.40  5652.00
GR  1336.40  5653.00  1336.30  5665.00  1336.40  5671.00  1336.30  5675.00  1336.50  5680.00
GR  1336.60  5683.00  1336.50  5689.00  1336.70  5693.00  1336.80  5698.00  1336.80  5703.00
GR  1336.80  5707.00  1336.80  5709.00  1336.90  5712.00  1337.10  5721.00  1337.20  5723.00
GR  1337.30  5724.00  1336.40  5732.00  1336.30  5733.00  1337.00  5744.00  1336.40  5763.00
GR  1336.30  5769.00  1336.30  5771.00  1336.40  5773.00  1336.70  5780.00  1336.10  5788.00
GR  1336.00  5789.00  1336.10  5798.00  1336.20  5800.00  1336.50  5807.00  1336.60  5810.00
GR  1336.90  5816.00  1337.20  5820.00  1337.20  5822.00  1336.50  5828.00  1335.80  5834.00
GR  1336.00  5841.00  1336.20  5843.00  1336.40  5851.00  1336.40  5852.00  1336.20  5857.00
GR  1336.10  5861.00  1336.40  5870.00  1336.50  5878.00  1336.70  5881.00  1337.00  5882.00
GR  1336.70  5890.00  1336.70  5894.00  1336.50  5896.00  1336.50  5898.00  1336.40  5899.00
GR  1337.20  5899.00  1340.50  5905.00  1343.80  5909.00  1345.00  5911.00  1348.00  5915.00
GR  1348.30  5916.00  1349.40  5918.00  1349.60  5919.00  1350.90  5920.00  1353.90  5927.00
GR  1354.10  5927.00  1358.70  5935.00  1359.00  5935.00  1359.30  5936.00  1362.30  5945.00
GR  1362.70  5946.00  1363.10  5948.00  1363.40  5950.00  1363.80  5952.00  1363.90  5953.00
GR  1364.00  5955.00  1363.80  5957.00  1364.00  5958.00  1364.00  5959.00  1363.70  5962.00
GR  1363.70  5964.00  1363.60  5965.00  1363.70  5970.00  1363.70  5971.00  1363.70  5972.00
GR  1364.00  5976.00  1364.30  5979.00  1364.60  5981.00  1364.70  5982.00  1364.80  5984.00
GR  1364.80  5987.00  1364.80  5989.00  1365.10  5991.00  1366.00  5996.00  1365.90  6003.00
GR  1366.00  6010.00  1366.20  6012.00  1366.00  6019.00  1366.10  6021.00  1365.20  6028.00
GR  1365.60  6033.00  1367.10  6047.00  1366.70  6048.00  1365.70  6055.00  1369.20  6059.00
GR  1370.30  6060.00
X1 10593.00   305.00  4980.00  5016.00   369.00   387.00   374.00     0.00     0.00     0.00
X3                                                                                       2.00
GR  1345.10  4396.00  1344.20  4398.00  1344.20  4400.00  1344.30  4404.00  1344.30  4405.00
GR  1344.50  4409.00  1344.50  4410.00  1344.60  4411.00  1345.10  4413.00  1345.10  4414.00
GR  1345.00  4415.00  1343.50  4430.00  1343.40  4431.00  1342.60  4440.00  1342.60  4444.00
GR  1342.30  4450.00  1342.50  4452.00  1342.50  4453.00  1342.60  4457.00  1342.50  4459.00
GR  1342.20  4474.00  1342.60  4485.00  1342.90  4488.00  1342.60  4492.00  1342.80  4497.00
GR  1342.80  4498.00  1342.20  4506.00  1342.10  4507.00  1342.10  4508.00  1343.20  4527.50
GR  1344.30  4547.00  1344.30  4549.00  1344.30  4551.00  1344.00  4558.00  1343.30  4568.00
GR  1343.30  4574.00  1343.40  4580.00  1343.40  4581.00  1342.70  4587.00  1342.30  4591.00
GR  1342.00  4597.00  1341.90  4600.00  1341.80  4601.00  1342.60  4608.00  1342.70  4609.00
GR  1342.60  4611.00  1342.70  4619.00  1342.60  4623.00  1342.40  4624.00  1342.10  4629.00
GR  1341.90  4632.00  1341.40  4639.00  1341.60  4643.00  1341.90  4647.00  1341.90  4648.00
GR  1341.90  4654.00  1341.90  4658.00  1342.10  4661.00  1342.90  4667.00  1342.90  4668.00
GR  1343.30  4675.00  1343.30  4677.00  1343.10  4681.00  1343.60  4696.00  1343.60  4697.00
GR  1343.50  4713.00  1343.50  4721.00  1343.70  4730.00  1343.70  4739.00  1343.70  4756.00
GR  1343.60  4757.00  1343.60  4758.00  1343.50  4767.00  1343.60  4768.00  1343.60  4780.00
GR  1343.70  4789.00  1343.40  4808.00  1343.10  4812.00  1343.00  4813.00  1343.00  4814.00
GR  1342.90  4820.00  1342.90  4822.00  1342.80  4823.00  1342.90  4829.00  1342.80  4832.00
GR  1342.80  4836.00  1342.70  4842.00  1342.70  4843.00  1342.70  4847.00  1342.80  4850.00
GR  1342.80  4851.00  1342.80  4858.00  1342.80  4862.00  1342.80  4866.00  1342.80  4872.00
GR  1342.80  4874.00  1342.70  4880.00  1342.70  4881.00  1342.70  4882.00  1342.70  4892.00
GR  1342.70  4896.00  1342.70  4903.00  1342.80  4906.00  1342.80  4911.00  1342.80  4912.00
GR  1342.80  4918.00  1342.90  4922.00  1342.80  4925.00  1342.80  4932.00  1342.80  4933.00
GR  1342.60  4935.00  1342.30  4940.00  1342.20  4942.00  1342.20  4947.00  1342.30  4950.00
GR  1342.30  4952.00  1342.20  4956.00  1341.70  4961.00  1339.10  4967.00  1338.10  4971.00
GR  1337.20  4974.00  1336.30  4980.00  1335.90  4982.00  1335.00  4984.00  1332.60  4989.00
GR  1332.30  4992.00  1332.00  4995.00  1331.70  4995.00  1331.70  5004.00  1331.90  5005.00
GR  1331.90  5007.00  1332.80  5008.00  1333.50  5009.00  1338.90  5016.00  1339.30  5018.00
GR  1340.40  5020.00  1343.60  5027.00  1343.90  5028.00  1344.30  5031.00  1344.50  5033.00
GR  1345.00  5035.00  1343.10  5046.00  1342.60  5051.00  1342.30  5053.00  1342.00  5056.00
GR  1342.00  5058.00  1341.60  5065.00  1340.90  5067.00  1340.80  5070.00  1340.70  5074.00
GR  1340.70  5075.00  1340.70  5087.00  1340.80  5092.00  1340.70  5098.00  1340.70  5101.00
GR  1340.80  5106.00  1340.80  5111.00  1341.30  5118.00  1341.20  5119.00  1341.20  5121.00
GR  1340.70  5126.00  1340.80  5129.00  1341.70  5136.00  1341.60  5138.00  1339.70  5147.00
GR  1339.70  5148.00  1340.10  5152.00  1341.20  5164.00  1341.30  5165.00  1341.20  5167.00
GR  1341.40  5174.00  1340.80  5180.00  1341.10  5186.00  1341.50  5192.00  1341.30  5196.00
GR  1341.20  5200.00  1341.30  5202.00  1341.80  5206.00  1341.80  5210.00  1341.90  5213.00
GR  1341.95  5224.00  1342.00  5235.00  1342.10  5236.00  1343.20  5245.00  1343.30  5246.00
GR  1343.30  5247.00  1343.30  5248.00  1343.30  5252.00  1343.10  5254.00  1343.40  5261.00
GR  1343.50  5263.00  1343.80  5270.00  1343.80  5274.00  1344.20  5283.00  1344.20  5287.00
GR  1344.20  5292.00  1344.20  5293.00  1344.80  5302.00  1344.80  5304.00  1344.70  5309.00
GR  1344.90  5311.00  1345.00  5315.00  1345.10  5318.00  1344.90  5320.00  1345.00  5324.00
GR  1345.50  5329.00  1344.90  5335.00  1344.80  5336.00  1344.60  5339.00  1344.70  5343.00
```

```
GR  1344.80  5346.00  1344.90  5351.00  1344.90  5353.00  1344.90  5359.00  1344.90  5364.00
GR  1344.80  5368.00  1344.80  5371.00  1344.60  5376.00  1344.60  5384.00  1344.60  5386.00
GR  1344.70  5392.00  1344.70  5395.00  1344.40  5399.00  1344.20  5403.00  1342.90  5416.00
GR  1342.70  5425.00  1342.90  5432.00  1343.10  5434.00  1343.60  5440.00  1342.70  5445.00
GR  1342.30  5447.00  1341.40  5455.00  1341.90  5459.00  1341.20  5466.00  1341.10  5468.00
GR  1341.30  5480.00  1342.00  5499.00  1342.10  5502.00  1342.00  5503.00  1341.90  5504.00
GR  1342.50  5512.00  1343.30  5520.00  1343.30  5522.00  1343.30  5525.00  1343.00  5530.00
GR  1343.40  5535.00  1343.40  5540.00  1342.60  5547.00  1342.30  5549.00  1342.30  5558.00
GR  1342.30  5559.00  1342.30  5567.00  1342.30  5576.00  1342.40  5579.00  1342.40  5584.00
GR  1342.50  5585.00  1342.90  5592.00  1343.00  5593.00  1343.00  5600.00  1343.00  5601.00
GR  1343.00  5604.00  1343.00  5609.00  1343.00  5610.00  1343.10  5617.00  1343.10  5620.00
GR  1342.90  5625.00  1342.90  5629.00  1342.90  5633.00  1342.90  5638.00  1343.40  5648.00
GR  1343.50  5649.00  1343.80  5657.00  1344.20  5661.00  1343.90  5666.00  1343.80  5667.00
GR  1343.60  5671.00  1343.20  5673.00  1342.20  5679.00  1343.30  5681.00  1343.90  5687.00
GR  1343.80  5691.00  1344.10  5698.00  1344.10  5700.00  1343.90  5705.00  1343.90  5707.00
GR  1343.80  5711.00  1343.80  5716.00  1343.80  5717.00  1343.60  5724.00  1343.60  5728.00
GR  1343.70  5735.00  1343.30  5741.00  1343.10  5747.00  1342.80  5752.00  1342.80  5757.00
GR  1342.90  5762.00  1343.20  5766.00  1343.80  5774.00  1343.90  5776.00  1343.70  5782.00
GR  1341.70  5787.00  1341.40  5788.00  1347.20  5796.00  1347.50  5797.00  1347.40  5798.00
GR  1348.80  5806.00  1349.40  5807.00
X1 10871.00   327.00  4969.00  5014.00   287.00   243.00   278.00     0.00     0.00     0.00
X3                                                                                      2.00
GR  1348.10  4442.00  1348.00  4446.00  1348.00  4447.00  1348.00  4448.00  1347.90  4455.00
GR  1347.90  4456.00  1348.10  4461.00  1348.10  4462.00  1348.00  4464.00  1348.10  4465.00
GR  1348.00  4466.00  1348.20  4469.00  1347.60  4472.00  1347.60  4476.00  1347.90  4480.00
GR  1347.20  4486.00  1346.80  4488.00  1347.00  4497.00  1347.20  4511.00  1347.30  4514.00
GR  1347.50  4519.00  1347.50  4524.00  1346.90  4528.00  1346.90  4532.00  1347.00  4536.00
GR  1347.60  4540.00  1347.70  4546.00  1347.60  4549.00  1347.30  4556.00  1347.30  4558.00
GR  1347.10  4566.00  1347.10  4568.00  1347.10  4574.00  1347.10  4576.00  1347.10  4577.00
GR  1346.90  4584.00  1346.90  4587.00  1347.00  4593.00  1347.10  4598.00  1346.90  4602.00
GR  1346.90  4611.00  1346.70  4619.00  1346.60  4621.00  1346.10  4628.00  1346.00  4629.00
GR  1346.20  4636.00  1345.60  4643.00  1345.50  4646.00  1345.20  4649.00  1345.20  4654.00
GR  1345.50  4663.00  1345.60  4669.00  1345.50  4672.00  1345.20  4679.00  1345.20  4680.00
GR  1346.20  4686.00  1346.70  4689.00  1346.90  4697.00  1346.80  4699.00  1346.40  4704.00
GR  1346.50  4708.00  1346.50  4712.00  1346.60  4717.00  1346.40  4722.00  1346.10  4735.00
GR  1346.00  4736.00  1346.10  4745.00  1346.00  4754.00  1346.00  4758.00  1346.10  4764.00
GR  1346.00  4768.00  1346.10  4773.00  1346.00  4779.00  1346.00  4782.00  1346.20  4790.00
GR  1346.20  4791.00  1346.20  4800.00  1346.20  4811.50  1346.20  4823.00  1346.20  4829.00
GR  1346.10  4830.00  1346.20  4831.00  1346.10  4837.00  1346.00  4850.00  1346.00  4851.00
GR  1346.00  4852.00  1346.20  4863.00  1345.90  4868.00  1345.90  4870.00  1345.90  4874.00
GR  1345.90  4880.00  1345.90  4885.00  1346.00  4889.00  1346.00  4896.00  1346.00  4898.00
GR  1345.90  4907.00  1345.90  4911.00  1346.00  4916.00  1346.00  4917.00  1346.20  4925.00
GR  1346.30  4928.00  1346.20  4934.00  1346.20  4939.00  1346.20  4943.00  1346.10  4947.00
GR  1344.40  4965.00  1343.10  4969.00  1341.50  4972.00  1337.50  4984.00  1336.70  4986.00
GR  1336.40  4987.00  1336.00  4989.00  1335.30  4995.00  1335.30  5004.00  1335.50  5005.00
GR  1335.80  5007.00  1335.90  5008.00  1338.30  5012.00  1339.30  5014.00  1339.50  5015.00
GR  1340.20  5023.00  1344.70  5030.00  1346.20  5032.00  1346.40  5035.00  1346.90  5041.00
GR  1347.00  5049.00  1347.00  5050.00  1346.90  5054.00  1346.80  5058.00  1346.70  5059.00
GR  1346.20  5067.00  1345.70  5070.00  1345.40  5072.00  1345.10  5075.00  1344.80  5080.00
GR  1345.00  5084.00  1344.20  5090.00  1344.30  5093.00  1345.10  5098.00  1345.10  5101.00
GR  1345.30  5107.00  1345.40  5110.00  1345.50  5111.00  1345.30  5119.00  1345.20  5128.00
GR  1345.20  5129.00  1344.90  5136.00  1344.90  5139.00  1344.90  5145.00  1344.90  5149.00
GR  1345.10  5153.00  1345.40  5158.00  1345.40  5160.00  1345.40  5161.00  1345.55  5174.00
GR  1345.70  5187.00  1345.60  5188.00  1344.40  5195.00  1344.30  5197.00  1344.50  5204.00
GR  1344.30  5206.00  1345.10  5209.00  1346.10  5215.00  1346.20  5218.00  1345.00  5225.00
GR  1345.00  5227.00  1345.50  5234.00  1345.50  5235.00  1345.80  5246.00  1345.80  5249.00
GR  1345.60  5254.00  1344.70  5260.00  1344.60  5262.00  1344.60  5264.00  1345.20  5270.00
GR  1345.40  5274.00  1345.30  5279.00  1345.60  5293.00  1346.10  5297.00  1345.40  5302.00
GR  1345.00  5306.00  1345.00  5312.00  1345.50  5321.00  1345.70  5322.00  1346.20  5329.00
GR  1346.80  5340.00  1347.20  5341.00  1347.00  5345.00  1347.10  5349.00  1346.80  5353.00
GR  1346.80  5358.00  1346.80  5362.00  1346.90  5367.00  1346.00  5372.00  1345.70  5378.00
GR  1345.70  5379.00  1345.60  5385.00  1346.00  5399.00  1346.10  5401.00  1346.00  5404.00
GR  1345.90  5407.00  1346.80  5414.00  1346.80  5416.00  1346.80  5418.00  1346.20  5423.00
GR  1346.00  5426.00  1345.00  5432.00  1345.20  5435.00  1344.60  5440.00  1345.50  5446.00
GR  1344.40  5458.00  1344.70  5465.00  1344.80  5472.00  1345.10  5486.00  1345.10  5496.00
GR  1345.10  5497.00  1345.10  5504.00  1345.20  5507.00  1345.30  5512.00  1346.20  5519.00
GR  1346.20  5521.00  1346.20  5524.00  1345.70  5530.00  1345.70  5534.00  1345.50  5539.00
GR  1345.50  5544.00  1345.50  5547.00  1345.40  5552.00  1345.70  5560.00  1345.70  5563.00
GR  1345.70  5565.00  1345.60  5571.00  1345.60  5574.00  1345.60  5578.00  1345.60  5586.00
GR  1346.40  5591.00  1346.30  5595.00  1345.90  5600.00  1345.90  5604.00  1346.00  5609.00
GR  1345.90  5613.00  1345.90  5617.00  1345.90  5619.00  1346.00  5625.00  1346.00  5628.00
```

GR	1346.10	5631.00	1346.10	5635.00	1346.10	5637.00	1346.10	5640.00	1347.20	5655.00
GR	1347.20	5656.00	1346.10	5669.00	1346.10	5676.00	1346.10	5681.00	1346.20	5690.00
GR	1346.20	5695.00	1346.10	5697.00	1346.00	5701.00	1346.00	5703.00	1346.00	5705.00
GR	1346.30	5705.00	1346.90	5712.00	1346.90	5714.00	1347.60	5720.00	1347.70	5723.00
GR	1347.10	5729.00	1346.10	5732.00	1346.50	5737.00	1345.40	5745.00	1345.30	5746.00
GR	1345.40	5747.00	1345.70	5755.00	1345.70	5756.00	1345.90	5760.00	1346.00	5763.00
GR	1346.10	5767.00	1346.20	5769.00	1346.10	5771.00	1346.20	5778.00	1346.30	5779.00
GR	1346.30	5780.00	1346.20	5787.00	1346.20	5788.00	1345.70	5797.00	1345.60	5799.00
GR	1345.80	5803.00	1345.10	5807.00	1345.40	5808.00	1346.00	5810.00	1348.20	5815.00
GR	1349.80	5820.00	1350.50	5823.00	1353.50	5831.00	1354.00	5832.00	1356.90	5838.00
GR	1357.90	5840.00	1358.20	5841.00	1362.20	5849.00	1363.30	5851.00	1366.90	5861.00
GR	1370.10	5866.00	1371.70	5869.00	1374.20	5872.00	1381.30	5880.00	1382.20	5882.00
GR	1384.20	5888.00	1384.60	5889.00	1385.30	5890.00	1386.90	5892.00	1390.50	5898.00
GR	1391.80	5902.00	1392.50	5903.00	1392.90	5904.00	1396.70	5913.00	1398.50	5918.00
GR	1397.20	5924.00	1397.80	5931.00	1397.90	5933.00	1398.90	5940.00	1399.20	5943.00
GR	1399.90	5948.00	1400.50	5952.00	1401.10	5955.00	1401.60	5962.00	1401.60	5963.00
GR	1402.00	5966.00	1402.80	5970.00	1403.00	5971.00	1403.50	5974.00		
X1	10947.00	349.00	4968.00	5025.00	81.00	115.00	76.00	0.00	0.00	0.00
X3										3.00
GR	1350.10	4309.00	1350.10	4310.00	1350.30	4313.00	1350.20	4314.00	1350.20	4318.00
GR	1350.20	4319.00	1350.20	4321.00	1350.10	4323.00	1350.10	4324.00	1350.10	4326.00
GR	1350.10	4331.00	1350.20	4332.00	1350.10	4334.00	1350.10	4335.00	1349.90	4337.00
GR	1349.80	4338.00	1349.80	4341.00	1349.90	4343.00	1349.80	4345.00	1349.70	4347.00
GR	1349.70	4352.00	1349.70	4353.00	1349.80	4355.00	1349.80	4356.00	1349.80	4358.00
GR	1349.70	4361.00	1349.80	4363.00	1349.80	4366.00	1350.00	4367.00	1350.00	4368.00
GR	1349.80	4371.00	1349.90	4373.00	1349.60	4376.00	1349.60	4377.00	1349.50	4383.00
GR	1349.50	4384.00	1348.30	4392.00	1348.40	4400.00	1348.30	4402.00	1349.60	4412.00
GR	1349.40	4417.00	1349.20	4420.00	1349.20	4421.00	1349.20	4423.00	1349.20	4425.00
GR	1349.60	4430.00	1349.50	4432.00	1348.90	4439.00	1349.10	4443.00	1349.10	4446.00
GR	1349.20	4447.00	1349.00	4450.00	1349.00	4452.00	1349.00	4453.00	1348.90	4457.00
GR	1348.80	4459.00	1348.70	4462.00	1348.30	4466.00	1348.30	4469.00	1348.30	4474.00
GR	1348.20	4480.00	1347.80	4490.00	1347.90	4492.00	1347.90	4500.00	1347.80	4501.00
GR	1347.80	4510.00	1347.80	4519.00	1347.80	4520.00	1347.70	4527.00	1347.80	4530.00
GR	1347.70	4535.00	1347.70	4540.00	1347.60	4544.00	1347.50	4550.00	1347.50	4552.00
GR	1347.40	4560.00	1347.40	4561.00	1347.40	4569.00	1347.20	4578.00	1347.20	4581.00
GR	1347.20	4587.00	1347.20	4591.00	1347.20	4596.00	1347.30	4601.00	1347.30	4605.00
GR	1347.20	4614.00	1347.30	4621.00	1347.40	4623.00	1346.30	4631.00	1346.40	4634.00
GR	1346.50	4640.00	1346.60	4642.00	1346.70	4649.00	1346.60	4652.00	1346.50	4659.00
GR	1346.80	4663.00	1347.40	4668.00	1348.10	4674.00	1348.30	4677.00	1348.50	4685.00
GR	1348.50	4686.00	1348.30	4692.00	1348.20	4695.00	1347.70	4704.00	1347.80	4705.00
GR	1347.70	4712.00	1347.60	4715.00	1347.70	4721.00	1347.40	4725.00	1347.20	4730.00
GR	1347.60	4735.00	1347.40	4739.00	1347.10	4745.00	1347.20	4747.00	1347.30	4749.00
GR	1347.50	4755.00	1347.80	4765.00	1348.80	4774.00	1348.80	4776.00	1348.80	4778.00
GR	1348.30	4796.00	1348.40	4801.00	1348.00	4808.00	1348.00	4811.00	1348.50	4819.00
GR	1348.50	4820.00	1348.50	4822.00	1348.40	4829.00	1348.40	4837.00	1348.40	4839.00
GR	1348.30	4841.00	1348.10	4850.00	1347.80	4854.00	1347.50	4858.00	1347.50	4863.00
GR	1347.60	4868.00	1347.60	4872.00	1347.60	4875.00	1347.70	4879.00	1347.80	4886.00
GR	1347.80	4887.00	1347.80	4889.00	1347.80	4897.00	1347.80	4900.00	1347.70	4906.00
GR	1347.50	4915.00	1347.50	4917.00	1347.30	4921.00	1347.10	4928.00	1347.00	4931.00
GR	1347.00	4936.00	1346.90	4941.00	1347.20	4948.00	1347.30	4950.00	1347.40	4958.00
GR	1347.40	4959.00	1347.10	4968.00	1347.00	4968.00	1346.20	4977.00	1345.70	4980.00
GR	1344.50	4984.00	1342.80	4987.00	1341.10	4988.00	1340.90	4991.00	1340.90	4994.00
GR	1340.90	4995.00	1340.90	5005.00	1341.00	5005.00	1341.10	5009.00	1341.20	5015.00
GR	1344.00	5017.00	1345.80	5018.00	1346.00	5021.00	1346.00	5023.00	1346.30	5025.00
GR	1346.55	5036.50	1346.80	5048.00	1346.50	5052.00	1346.70	5058.00	1346.70	5065.00
GR	1346.60	5075.00	1346.40	5080.00	1346.50	5083.00	1346.80	5089.00	1346.70	5097.00
GR	1346.70	5099.00	1346.60	5104.00	1346.50	5109.00	1346.50	5112.00	1346.60	5118.00
GR	1346.60	5119.00	1346.40	5131.00	1346.30	5135.00	1346.50	5142.00	1346.60	5143.00
GR	1346.60	5147.00	1346.70	5152.00	1346.80	5158.00	1347.00	5167.00	1347.00	5170.00
GR	1347.00	5172.00	1346.90	5178.00	1347.00	5180.00	1347.30	5186.00	1347.80	5191.00
GR	1347.80	5192.00	1348.05	5205.00	1348.30	5218.00	1347.70	5223.00	1348.00	5227.00
GR	1347.70	5240.00	1347.40	5253.00	1347.30	5256.00	1347.10	5263.00	1347.20	5264.00
GR	1347.70	5279.00	1347.30	5284.00	1347.20	5290.00	1347.20	5300.00	1347.60	5306.00
GR	1348.10	5310.00	1348.00	5316.00	1348.00	5317.00	1348.10	5320.00	1348.10	5325.00
GR	1348.10	5328.00	1348.00	5333.00	1348.20	5340.00	1348.20	5341.00	1348.20	5344.00
GR	1348.20	5349.00	1348.10	5351.00	1348.40	5357.00	1348.40	5362.00	1348.30	5365.00
GR	1348.30	5372.00	1348.30	5373.00	1348.60	5380.00	1348.50	5383.00	1348.50	5387.00
GR	1348.70	5392.00	1348.70	5394.00	1348.70	5398.00	1348.70	5402.00	1349.00	5417.00
GR	1349.00	5419.00	1349.10	5425.00	1349.30	5436.00	1349.30	5441.00	1349.20	5444.00
GR	1349.50	5451.00	1349.60	5453.00	1349.80	5460.00	1349.90	5463.00	1349.80	5467.00
GR	1349.60	5473.00	1349.60	5475.00	1350.10	5481.00	1350.20	5482.00	1350.20	5483.00

```
GR  1350.60  5490.00  1350.70  5494.00  1350.80  5498.00  1351.00  5505.00  1351.40  5508.00
GR  1349.30  5512.00  1348.00  5515.00  1347.60  5517.00  1347.20  5519.00  1347.00  5520.00
GR  1347.20  5522.00  1347.20  5524.00  1347.30  5542.00  1347.50  5550.00  1347.70  5556.00
GR  1347.70  5558.00  1347.70  5562.00  1347.70  5566.00  1347.80  5567.00  1348.00  5575.00
GR  1347.90  5581.00  1347.90  5584.00  1348.10  5592.00  1348.20  5593.00  1348.20  5594.00
GR  1348.70  5602.00  1348.90  5607.00  1349.00  5610.00  1349.70  5615.00  1350.10  5619.00
GR  1350.00  5621.00  1348.90  5628.00  1349.10  5632.00  1349.30  5636.00  1349.40  5641.00
GR  1349.40  5646.00  1349.40  5661.00  1349.40  5662.00  1349.40  5663.00  1349.40  5666.00
GR  1349.60  5672.00  1349.40  5678.00  1349.10  5681.00  1349.40  5692.00  1348.90  5709.00
GR  1349.20  5712.00  1348.70  5725.00  1349.10  5728.00  1349.90  5734.00  1349.90  5745.00
GR  1349.80  5748.00  1349.80  5749.00  1350.00  5754.00  1350.20  5758.00  1350.30  5760.00
GR  1350.50  5766.00  1350.50  5767.00  1350.50  5774.00  1350.30  5784.00  1350.40  5793.00
GR  1350.30  5797.00  1350.20  5800.00  1350.10  5805.00  1350.20  5811.00  1350.20  5812.00
GR  1350.10  5821.00  1350.00  5825.00  1350.00  5830.00  1349.80  5839.00  1349.80  5840.00
GR  1349.60  5847.00  1349.70  5854.00  1349.80  5859.00  1349.90  5862.00  1349.80  5863.00
GR  1349.90  5870.00  1349.70  5877.00  1349.50  5880.00  1349.50  5881.00  1349.50  5882.00
GR  1349.50  5886.00  1350.40  5891.00  1350.90  5895.00  1351.10  5897.00  1352.40  5905.00
GR  1353.50  5911.00  1353.60  5913.00  1353.60  5919.00  1354.10  5925.00  1355.00  5932.00
GR  1355.40  5934.00  1355.30  5935.00
X1 11004.00   283.00  4979.00  5019.00    49.00    53.00    57.00     0.00     0.00     0.00
X3                                                                                       2.00
GR  1350.50  4459.00  1350.60  4462.00  1350.50  4464.00  1350.10  4466.00  1348.90  4472.00
GR  1348.70  4473.00  1348.30  4482.00  1348.30  4483.00  1348.40  4491.00  1348.40  4495.00
GR  1348.40  4500.00  1348.30  4507.00  1348.30  4509.00  1348.50  4517.00  1348.50  4518.00
GR  1348.60  4525.00  1348.60  4528.00  1348.40  4535.00  1348.20  4543.00  1348.20  4548.00
GR  1348.00  4557.00  1348.10  4558.00  1347.60  4566.00  1347.80  4572.00  1347.80  4575.00
GR  1347.80  4584.00  1347.70  4585.00  1347.80  4587.00  1347.70  4593.00  1347.70  4596.00
GR  1348.00  4602.00  1347.60  4607.00  1347.20  4611.00  1347.60  4619.00  1347.70  4628.00
GR  1347.60  4630.00  1347.30  4637.00  1347.40  4641.00  1347.50  4646.00  1348.20  4653.00
GR  1348.50  4654.00  1348.50  4657.00  1348.60  4664.00  1348.60  4665.00  1348.60  4673.00
GR  1348.70  4677.00  1348.80  4683.00  1348.90  4690.00  1348.90  4692.00  1348.80  4699.00
GR  1348.80  4704.00  1348.60  4707.00  1348.80  4724.00  1349.00  4741.00  1349.00  4745.00
GR  1348.20  4748.00  1348.90  4753.00  1348.90  4759.00  1348.70  4768.00  1348.50  4784.00
GR  1348.50  4788.00  1348.50  4792.00  1348.30  4796.00  1348.00  4805.00  1348.10  4811.00
GR  1347.50  4820.00  1347.40  4822.00  1347.40  4827.00  1347.40  4833.00  1347.50  4835.00
GR  1347.10  4843.00  1347.10  4844.00  1348.10  4853.00  1348.10  4856.00  1348.20  4862.00
GR  1348.10  4867.00  1348.10  4871.00  1348.20  4879.00  1348.20  4881.00  1348.30  4888.00
GR  1348.30  4891.00  1348.30  4896.00  1348.20  4897.00  1348.20  4902.00  1348.50  4906.00
GR  1348.30  4908.00  1348.40  4910.00  1348.50  4916.00  1348.50  4921.00  1348.30  4926.00
GR  1348.40  4927.00  1348.20  4932.00  1348.00  4943.00  1347.90  4947.00  1347.90  4953.00
GR  1347.90  4956.00  1347.90  4962.00  1347.80  4966.00  1347.30  4971.00  1347.30  4973.00
GR  1347.00  4976.00  1346.40  4979.00  1346.00  4981.00  1342.90  4985.00  1341.60  4986.00
GR  1341.60  4987.00  1341.60  4990.00  1341.50  4993.00  1341.50  4999.00  1341.50  5002.00
GR  1340.80  5002.00  1340.80  5011.00  1341.30  5012.00  1343.00  5013.00  1347.00  5018.00
GR  1347.70  5019.00  1347.10  5031.00  1347.10  5040.00  1346.70  5053.00  1346.60  5061.00
GR  1346.80  5066.00  1346.70  5071.00  1346.50  5081.00  1346.70  5084.00  1346.90  5088.00
GR  1346.90  5090.00  1347.00  5093.00  1347.00  5094.00  1347.00  5095.00  1346.10  5108.00
GR  1346.50  5116.00  1346.50  5119.00  1346.60  5123.00  1346.80  5135.00  1346.60  5139.00
GR  1346.40  5142.00  1346.50  5148.00  1346.50  5149.00  1346.50  5150.00  1347.60  5166.00
GR  1347.60  5168.00  1347.80  5171.00  1347.70  5176.00  1347.70  5179.00  1347.80  5187.00
GR  1347.90  5193.00  1347.80  5196.00  1347.90  5201.00  1348.00  5204.00  1348.00  5205.00
GR  1348.00  5206.00  1348.30  5218.00  1348.60  5230.00  1346.80  5237.00  1346.90  5240.00
GR  1347.60  5244.00  1347.80  5247.00  1348.30  5258.00  1348.30  5259.00  1348.30  5260.00
GR  1348.40  5267.00  1348.40  5271.00  1348.30  5274.00  1348.50  5282.00  1348.50  5283.00
GR  1348.60  5292.00  1348.70  5297.00  1348.80  5302.00  1348.80  5305.00  1348.40  5312.00
GR  1348.60  5319.00  1348.60  5322.00  1348.80  5327.00  1349.00  5333.00  1349.00  5334.00
GR  1349.00  5337.00  1349.00  5343.00  1349.00  5345.00  1349.00  5352.00  1349.10  5359.00
GR  1349.10  5361.00  1348.90  5366.00  1348.90  5378.00  1349.60  5388.00  1349.50  5389.00
GR  1349.20  5395.00  1349.20  5397.00  1349.10  5399.00  1349.00  5401.00  1349.00  5404.00
GR  1349.20  5408.00  1349.60  5415.00  1350.30  5424.00  1350.40  5428.00  1350.50  5432.00
GR  1350.50  5439.00  1350.50  5441.00  1350.50  5447.00  1350.70  5451.00  1351.00  5454.00
GR  1351.40  5461.00  1351.20  5463.00  1350.90  5469.00  1350.70  5473.00  1350.50  5479.00
GR  1350.60  5481.00  1350.70  5487.00  1351.10  5500.00  1350.90  5502.00  1351.20  5503.00
GR  1350.20  5507.00  1348.90  5510.00  1347.70  5513.00  1347.40  5514.00  1347.50  5515.00
GR  1347.20  5523.00  1348.00  5539.00  1348.30  5545.00  1348.30  5549.00  1348.60  5555.00
GR  1348.50  5562.00  1348.30  5571.00  1348.90  5581.00  1349.20  5591.00  1349.30  5595.00
GR  1349.40  5601.00  1350.20  5607.00  1350.50  5609.00  1350.40  5611.00  1349.70  5617.00
GR  1349.60  5623.00  1349.60  5624.00  1349.60  5627.00  1349.60  5633.00  1350.10  5637.00
GR  1350.60  5642.00  1350.80  5650.00  1350.90  5651.00  1350.60  5659.00  1350.30  5670.00
GR  1350.40  5672.00  1350.40  5676.00  1350.50  5678.00  1350.60  5682.00  1351.00  5688.00
GR  1351.00  5690.00  1350.90  5698.00  1351.00  5700.00  1351.10  5703.00  1351.20  5707.00
```

GR	1351.10	5718.00	1351.20	5729.00	1351.10	5732.00	1351.70	5741.00	1351.30	5751.00
GR	1351.30	5753.00	1351.40	5757.00	1351.50	5762.00	1351.50	5768.00	1351.60	5771.00
GR	1353.10	5778.00	1353.40	5779.00	1353.40	5780.00	1360.40	5798.00	1362.50	5804.00
GR	1363.20	5810.00	1363.50	5812.00	1362.70	5818.00	1362.30	5821.00	1366.80	5826.00
GR	1369.00	5829.00	1369.40	5831.00	1370.80	5837.00	1372.70	5844.00	1372.90	5845.00
GR	1374.60	5853.00	1375.80	5859.00	1377.10	5866.00	1377.80	5870.00	1378.10	5876.00
GR	1378.20	5881.00	1378.50	5887.00	1378.90	5889.00	1379.10	5891.00	1378.50	5895.00
X1	11267.00	364.00	4972.00	5026.00	241.00	288.00	263.00	0.00	0.00	0.00
X3										5.00
GR	1356.20	4239.00	1356.40	4240.00	1356.40	4241.00	1356.00	4252.00	1356.00	4255.00
GR	1355.90	4256.00	1355.80	4258.00	1355.70	4261.00	1355.80	4263.00	1355.70	4264.00
GR	1355.50	4265.00	1355.70	4267.00	1355.70	4270.00	1355.80	4272.00	1355.50	4274.00
GR	1355.40	4275.00	1355.40	4276.00	1355.40	4279.00	1355.30	4280.00	1355.20	4282.00
GR	1355.10	4284.00	1355.00	4285.00	1355.00	4287.00	1354.90	4289.00	1354.90	4291.00
GR	1354.80	4294.00	1354.60	4296.00	1354.60	4297.00	1354.60	4300.00	1354.50	4302.00
GR	1354.40	4304.00	1354.30	4306.00	1354.20	4307.00	1354.20	4308.00	1354.20	4309.00
GR	1354.10	4312.00	1353.90	4313.00	1353.90	4316.00	1353.80	4318.00	1353.80	4320.00
GR	1353.70	4321.00	1353.70	4322.00	1353.70	4324.00	1353.80	4325.00	1353.80	4327.00
GR	1353.70	4328.00	1353.70	4330.00	1353.60	4332.00	1353.50	4334.00	1353.60	4335.00
GR	1353.60	4337.00	1353.40	4339.00	1353.20	4341.00	1353.20	4342.00	1353.20	4343.00
GR	1353.40	4346.00	1353.30	4347.00	1353.10	4349.00	1353.40	4351.00	1353.30	4352.00
GR	1353.60	4354.00	1353.60	4355.00	1353.70	4357.00	1353.60	4359.00	1353.10	4363.00
GR	1353.00	4365.00	1352.90	4366.00	1353.00	4369.00	1353.00	4370.00	1353.00	4373.00
GR	1352.90	4375.00	1353.10	4377.00	1353.20	4380.00	1353.00	4383.00	1352.80	4385.00
GR	1352.80	4386.00	1353.20	4389.00	1353.30	4391.00	1353.40	4392.00	1353.50	4403.00
GR	1353.40	4404.00	1353.40	4407.00	1353.50	4409.00	1353.50	4424.00	1353.50	4431.00
GR	1353.30	4440.00	1352.70	4450.00	1352.80	4453.00	1352.80	4454.00	1353.10	4473.00
GR	1353.10	4474.00	1353.10	4486.00	1352.90	4491.00	1353.00	4499.00	1353.00	4500.00
GR	1353.40	4506.00	1353.10	4512.00	1353.20	4513.00	1353.10	4514.00	1353.20	4522.00
GR	1353.10	4525.00	1352.50	4533.00	1352.40	4537.00	1353.00	4544.00	1353.00	4547.00
GR	1351.20	4555.00	1351.10	4557.00	1351.10	4563.00	1351.40	4570.00	1351.40	4571.00
GR	1351.40	4573.00	1351.40	4580.00	1351.60	4589.00	1351.60	4590.00	1351.60	4597.00
GR	1351.50	4598.00	1351.50	4601.00	1351.20	4607.00	1351.20	4611.00	1351.30	4615.00
GR	1351.40	4623.00	1351.10	4631.00	1351.10	4632.00	1351.10	4634.00	1351.00	4638.00
GR	1350.50	4643.00	1350.40	4653.50	1350.30	4664.00	1350.30	4665.00	1350.40	4666.00
GR	1350.40	4667.00	1350.40	4672.00	1350.70	4681.00	1350.60	4682.00	1350.70	4685.00
GR	1350.70	4689.00	1350.80	4708.00	1350.90	4712.00	1350.90	4714.00	1351.20	4721.00
GR	1351.30	4722.00	1351.30	4724.00	1351.40	4730.00	1351.70	4736.00	1351.80	4738.00
GR	1351.80	4740.00	1351.00	4750.00	1350.70	4752.00	1350.80	4754.00	1350.90	4760.00
GR	1351.10	4762.00	1351.10	4763.00	1351.30	4774.00	1351.70	4783.00	1351.60	4784.00
GR	1351.30	4791.00	1351.20	4793.00	1351.20	4794.00	1351.20	4795.00	1351.30	4801.00
GR	1351.20	4806.00	1351.20	4808.00	1351.10	4811.00	1350.90	4816.00	1350.70	4820.00
GR	1350.60	4825.00	1349.50	4833.00	1349.40	4834.00	1349.50	4835.00	1349.30	4850.00
GR	1349.20	4851.00	1349.20	4859.00	1348.90	4861.00	1348.80	4869.00	1349.10	4872.00
GR	1349.40	4875.00	1349.00	4892.00	1349.00	4894.00	1349.00	4894.00	1350.10	4901.00
GR	1350.40	4905.00	1350.20	4908.00	1350.10	4912.00	1350.00	4915.00	1350.00	4923.00
GR	1350.00	4924.00	1350.00	4924.00	1349.80	4933.00	1349.80	4935.00	1349.70	4941.00
GR	1349.90	4948.00	1349.80	4949.00	1349.60	4955.00	1349.80	4960.00	1349.80	4961.00
GR	1349.80	4962.00	1349.70	4965.00	1349.40	4969.00	1349.50	4970.00	1349.20	4972.00
GR	1348.40	4975.00	1346.80	4980.00	1346.40	4982.00	1346.20	4986.00	1345.50	4989.00
GR	1344.00	4993.00	1343.70	4994.00	1342.70	4994.00	1342.70	5005.00	1343.30	5005.00
GR	1343.30	5006.00	1343.80	5009.00	1344.20	5013.00	1344.10	5015.00	1346.30	5021.00
GR	1347.00	5022.00	1348.20	5024.00	1349.70	5026.00	1349.80	5029.00	1349.80	5032.00
GR	1349.80	5033.00	1349.80	5039.00	1349.80	5040.00	1349.80	5042.00	1349.80	5046.00
GR	1349.80	5050.00	1349.80	5052.00	1349.80	5053.00	1349.80	5055.00	1349.80	5059.00
GR	1349.70	5063.00	1349.60	5066.00	1349.50	5071.00	1349.50	5072.00	1349.50	5073.00
GR	1349.60	5078.00	1349.60	5083.00	1349.60	5084.00	1349.40	5091.00	1349.40	5096.00
GR	1349.40	5098.00	1349.40	5099.00	1349.50	5102.00	1349.50	5108.00	1349.70	5115.00
GR	1349.70	5116.00	1349.70	5118.00	1349.80	5123.00	1349.80	5126.00	1349.70	5130.00
GR	1349.90	5135.00	1350.90	5143.00	1351.20	5145.00	1350.60	5152.00	1350.70	5157.00
GR	1351.00	5162.00	1351.30	5168.00	1351.30	5175.00	1351.30	5177.00	1351.50	5179.00
GR	1351.80	5185.00	1351.80	5189.00	1352.10	5196.00	1352.30	5200.00	1353.20	5204.00
GR	1353.20	5211.00	1353.20	5214.00	1353.40	5227.00	1353.60	5232.00	1353.40	5238.00
GR	1352.90	5241.00	1352.90	5244.00	1352.90	5249.00	1353.10	5255.00	1353.10	5256.00
GR	1352.90	5262.00	1352.90	5264.00	1353.20	5274.00	1352.90	5277.00	1352.70	5288.00
GR	1352.50	5295.00	1352.80	5299.00	1352.70	5305.00	1353.10	5312.00	1353.10	5314.00
GR	1353.10	5316.00	1352.80	5321.00	1352.50	5333.00	1352.20	5345.00	1352.20	5348.00
GR	1353.40	5353.00	1353.90	5359.00	1353.90	5362.00	1354.20	5367.00	1354.20	5370.00
GR	1354.30	5371.00	1354.30	5372.00	1354.30	5373.00	1354.20	5377.00	1354.15	5390.00
GR	1354.10	5403.00	1353.95	5419.00	1353.80	5435.00	1353.70	5437.00	1353.60	5441.00
GR	1353.80	5450.00	1353.60	5455.00	1353.10	5467.00	1352.60	5479.00	1352.60	5480.00

```
GR  1352.60  5482.00  1352.80  5489.00  1352.60  5496.00  1352.50  5498.00  1352.50  5501.00
GR  1352.40  5507.00  1352.20  5509.00  1351.90  5516.00  1351.20  5523.00  1351.00  5525.00
GR  1351.60  5529.00  1352.00  5533.00  1352.10  5534.00  1352.20  5535.00  1352.40  5542.00
GR  1352.80  5545.00  1353.20  5551.00  1354.20  5555.00  1354.40  5560.00  1354.20  5565.00
GR  1356.80  5569.00  1357.50  5570.00  1360.80  5577.00  1360.90  5578.00  1361.20  5578.00
GR  1364.70  5585.00  1366.80  5588.00  1369.20  5591.00  1374.00  5598.00  1378.90  5606.00
GR  1380.50  5609.00  1383.20  5614.00  1387.30  5620.00  1388.10  5621.00  1389.70  5624.00
GR  1392.80  5629.00  1393.10  5630.00  1394.30  5632.00  1399.00  5641.00  1402.80  5647.00
GR  1403.90  5649.00  1404.30  5649.00  1409.00  5655.00  1409.50  5658.00  1412.70  5663.00
GR  1416.20  5671.00  1417.40  5673.00  1418.60  5677.00  1420.50  5681.00  1421.60  5686.00
GR  1422.70  5690.00  1423.00  5691.00  1423.80  5693.00  1426.20  5699.00  1428.00  5706.00
GR  1428.70  5708.00  1429.90  5712.00  1431.20  5716.00  1433.50  5724.00
X1 11543.00   320.00  4977.00  5033.00   264.00   220.00   276.00     0.00     0.00     0.00
X3                                                                                       3.00
GR  1358.50  4311.00  1358.30  4313.00  1357.70  4317.00  1357.50  4319.00  1357.40  4321.00
GR  1357.30  4323.00  1357.20  4325.00  1357.20  4326.00  1357.20  4329.00  1357.20  4330.00
GR  1357.20  4333.00  1356.90  4336.00  1356.80  4337.00  1356.80  4340.00  1356.80  4341.00
GR  1356.80  4345.00  1356.60  4348.00  1356.60  4351.00  1356.70  4353.00  1356.40  4354.00
GR  1356.30  4356.00  1356.40  4358.00  1356.50  4360.00  1356.40  4362.00  1356.20  4364.00
GR  1356.10  4366.00  1356.00  4368.00  1355.90  4372.00  1356.00  4374.00  1356.00  4376.00
GR  1356.10  4379.00  1356.00  4382.00  1355.80  4385.00  1355.80  4386.00  1355.80  4387.00
GR  1355.60  4392.00  1355.50  4394.00  1355.50  4395.00  1355.80  4401.00  1355.80  4403.00
GR  1356.10  4405.00  1356.30  4407.00  1356.40  4408.00  1356.70  4412.00  1356.30  4413.00
GR  1356.10  4414.00  1356.10  4421.00  1355.30  4437.00  1355.40  4440.00  1355.40  4441.00
GR  1355.70  4454.00  1355.80  4457.00  1356.10  4461.00  1355.70  4464.00  1355.70  4467.00
GR  1355.50  4471.00  1355.40  4474.00  1355.40  4475.00  1355.40  4476.00  1355.40  4477.00
GR  1355.30  4484.00  1355.50  4489.00  1355.50  4490.00  1355.60  4491.00  1355.60  4494.00
GR  1355.70  4496.00  1355.90  4498.00  1356.30  4501.00  1356.20  4503.00  1356.20  4506.00
GR  1356.40  4510.00  1356.40  4513.00  1356.60  4514.00  1355.90  4527.00  1355.90  4530.00
GR  1355.80  4532.00  1355.80  4533.00  1355.70  4536.00  1355.70  4538.00  1355.30  4542.00
GR  1355.20  4550.00  1354.90  4554.00  1354.80  4559.00  1354.90  4564.00  1354.90  4567.00
GR  1355.00  4571.00  1355.00  4573.00  1355.00  4581.00  1355.00  4582.00  1355.00  4584.00
GR  1354.90  4586.00  1355.00  4592.00  1354.90  4593.00  1354.50  4600.00  1354.40  4602.00
GR  1354.70  4607.00  1355.00  4612.00  1355.10  4615.00  1355.20  4621.00  1355.20  4622.00
GR  1355.10  4630.00  1355.00  4632.00  1355.30  4637.00  1355.50  4641.00  1355.40  4647.00
GR  1355.30  4652.00  1355.20  4660.00  1355.20  4661.00  1355.10  4667.00  1355.10  4670.00
GR  1354.90  4675.00  1354.80  4680.00  1354.70  4682.00  1354.70  4688.00  1354.60  4690.00
GR  1354.70  4697.00  1354.70  4699.00  1354.60  4704.00  1354.60  4709.00  1354.50  4712.00
GR  1354.40  4718.00  1354.40  4719.00  1354.40  4722.00  1354.30  4727.00  1354.30  4729.00
GR  1354.30  4736.00  1354.20  4741.00  1354.20  4745.00  1354.40  4753.00  1354.90  4761.00
GR  1355.10  4766.00  1354.50  4770.00  1354.30  4775.00  1354.30  4778.00  1354.50  4785.00
GR  1354.30  4792.00  1354.20  4798.00  1353.10  4812.00  1353.10  4814.00  1353.80  4824.00
GR  1354.20  4829.00  1354.10  4832.00  1354.20  4837.00  1354.40  4843.00  1354.50  4845.00
GR  1354.30  4853.00  1354.30  4854.00  1354.40  4856.00  1354.70  4862.00  1354.70  4863.00
GR  1355.00  4871.00  1355.00  4881.00  1355.00  4882.00  1355.00  4883.00  1355.30  4892.00
GR  1354.60  4905.50  1353.90  4919.00  1354.20  4934.00  1354.20  4936.00  1353.10  4949.00
GR  1353.00  4951.00  1352.90  4953.00  1352.30  4959.00  1351.10  4966.00  1351.00  4967.00
GR  1351.80  4971.00  1352.20  4972.00  1352.80  4975.00  1352.60  4977.00  1350.60  4981.00
GR  1348.60  4984.00  1348.20  4986.00  1347.40  4990.00  1347.20  4991.00  1346.80  4994.00
GR  1346.80  4995.00  1346.90  5005.00  1347.00  5009.00  1347.40  5016.00  1348.30  5019.00
GR  1348.60  5021.00  1349.70  5026.00  1351.30  5031.00  1352.40  5033.00  1352.50  5034.00
GR  1352.50  5045.00  1352.60  5046.00  1353.40  5052.00  1353.50  5055.00  1353.60  5057.00
GR  1353.80  5068.00  1353.90  5074.00  1353.90  5081.00  1354.10  5085.00  1354.10  5087.00
GR  1353.90  5089.00  1353.20  5095.00  1353.10  5098.00  1353.30  5105.00  1353.40  5107.00
GR  1353.30  5114.00  1353.40  5116.00  1353.50  5124.00  1353.50  5126.00  1353.70  5133.00
GR  1353.70  5135.00  1353.70  5143.00  1353.70  5144.00  1353.90  5153.00  1353.80  5161.00
GR  1353.80  5162.00  1353.90  5171.00  1353.90  5172.00  1353.90  5180.00  1353.90  5181.00
GR  1353.90  5190.00  1354.10  5199.00  1354.10  5209.00  1354.00  5218.00  1354.20  5227.00
GR  1354.20  5228.00  1354.30  5236.00  1354.40  5237.00  1355.20  5243.00  1355.20  5247.00
GR  1354.20  5254.00  1353.90  5255.00  1353.90  5256.00  1353.80  5264.00  1353.80  5266.00
GR  1354.00  5274.00  1353.90  5277.00  1354.00  5294.00  1354.10  5311.00  1354.10  5326.00
GR  1354.10  5329.00  1354.20  5333.00  1354.40  5342.00  1354.50  5348.00  1354.50  5352.00
GR  1354.50  5357.00  1354.40  5361.00  1354.50  5367.00  1354.40  5371.00  1354.50  5376.00
GR  1354.20  5380.00  1354.30  5385.00  1354.30  5391.00  1354.50  5394.00  1354.20  5400.00
GR  1354.00  5403.00  1353.70  5405.00  1354.00  5408.00  1354.20  5413.00  1354.20  5419.00
GR  1354.20  5423.00  1354.20  5428.00  1354.40  5431.00  1354.40  5433.00  1354.40  5440.00
GR  1354.30  5442.00  1354.10  5444.00  1353.90  5452.00  1353.90  5454.00  1354.10  5457.00
GR  1354.10  5470.00  1354.20  5483.50  1354.30  5497.00  1354.30  5499.00  1354.00  5507.00
GR  1354.00  5508.00  1353.90  5516.00  1353.80  5524.00  1353.70  5525.00  1353.60  5534.00
GR  1353.60  5535.00  1354.10  5544.00  1353.60  5554.00  1353.40  5562.00  1353.50  5563.00
GR  1355.10  5571.00  1354.70  5572.00  1352.10  5579.00  1352.30  5580.00  1352.50  5581.00
```

GR	1353.40	5584.00	1355.30	5590.00	1356.00	5599.00	1356.00	5600.00	1356.80	5608.00
GR	1356.90	5609.00	1357.40	5612.00	1357.60	5614.00	1359.10	5618.00	1360.40	5626.00
GR	1360.80	5628.00	1362.60	5635.00	1363.10	5637.00	1363.70	5639.00	1367.40	5650.00
GR	1368.10	5653.00	1368.90	5655.00	1371.90	5662.00	1373.10	5664.00	1376.10	5671.00
GR	1377.70	5673.00	1380.10	5677.00	1383.60	5683.00	1392.20	5697.00	1393.20	5698.00
GR	1394.80	5700.00	1398.00	5705.00	1400.70	5709.00	1402.80	5712.00	1407.90	5719.00
GR	1411.20	5722.00	1416.00	5727.00	1420.70	5731.00	1425.90	5736.00	1428.60	5739.00
GR	1430.60	5742.00	1433.60	5747.00	1435.00	5749.00				
X1	11783.00	369.00	4982.00	5027.00	280.00	183.00	240.00	0.00	0.00	0.00
X3										1.00
GR	1362.40	4322.00	1362.80	4324.00	1362.90	4325.00	1362.90	4327.00	1362.90	4329.00
GR	1362.80	4330.00	1363.00	4332.00	1363.10	4333.00	1363.10	4335.00	1363.10	4337.00
GR	1363.00	4339.00	1362.30	4342.00	1362.20	4345.00	1362.10	4346.00	1362.30	4349.00
GR	1362.30	4350.00	1362.40	4353.00	1362.30	4354.00	1362.00	4356.00	1361.70	4358.00
GR	1361.50	4361.00	1361.10	4362.00	1360.80	4364.00	1360.60	4366.00	1360.40	4368.00
GR	1360.10	4370.00	1360.00	4371.00	1359.70	4374.00	1359.60	4376.00	1359.50	4378.00
GR	1359.30	4380.00	1359.20	4381.00	1359.10	4383.00	1359.10	4384.00	1359.00	4386.00
GR	1359.10	4387.00	1359.10	4388.00	1359.10	4390.00	1359.10	4392.00	1358.80	4394.00
GR	1358.80	4395.00	1358.70	4396.00	1358.60	4398.00	1358.70	4400.00	1358.80	4401.00
GR	1358.80	4403.00	1358.90	4404.00	1358.80	4405.00	1358.70	4406.00	1358.70	4407.00
GR	1358.70	4409.00	1358.50	4411.00	1358.60	4412.00	1358.70	4413.00	1358.60	4415.00
GR	1358.70	4417.00	1358.40	4419.00	1358.30	4420.00	1358.30	4421.00	1358.40	4422.00
GR	1358.50	4425.00	1358.60	4426.00	1358.60	4427.00	1358.50	4429.00	1358.30	4431.00
GR	1358.20	4432.00	1358.40	4433.00	1358.30	4434.00	1358.30	4435.00	1358.20	4437.00
GR	1358.20	4439.00	1358.10	4440.00	1358.10	4441.00	1358.20	4444.00	1358.10	4445.00
GR	1358.10	4448.00	1358.10	4449.00	1358.00	4450.00	1358.10	4453.00	1358.00	4455.00
GR	1358.10	4456.00	1357.90	4457.00	1357.90	4458.00	1357.90	4460.00	1357.90	4461.00
GR	1357.80	4462.00	1357.90	4464.00	1357.80	4465.00	1358.00	4466.00	1358.10	4467.00
GR	1358.20	4468.00	1358.20	4470.00	1358.30	4471.00	1358.50	4472.00	1359.20	4476.00
GR	1359.40	4477.00	1359.40	4478.00	1359.40	4485.00	1359.40	4486.00	1358.70	4499.50
GR	1358.00	4513.00	1357.90	4515.00	1358.70	4518.00	1358.50	4519.00	1358.50	4521.00
GR	1358.30	4526.00	1357.90	4534.00	1357.80	4535.00	1357.80	4536.00	1357.50	4544.00
GR	1357.50	4545.00	1357.70	4549.00	1358.00	4554.00	1358.20	4561.00	1358.20	4562.00
GR	1358.20	4566.00	1358.30	4579.00	1358.40	4580.00	1358.30	4589.00	1358.90	4602.00
GR	1358.70	4608.00	1358.60	4613.00	1358.60	4622.00	1358.20	4626.00	1358.20	4636.00
GR	1358.50	4641.00	1359.00	4649.00	1359.10	4656.00	1359.40	4664.00	1359.10	4669.00
GR	1359.00	4678.00	1358.90	4683.00	1359.70	4688.00	1359.70	4692.00	1359.40	4699.00
GR	1359.30	4705.00	1359.20	4713.00	1359.10	4717.00	1359.10	4721.00	1358.90	4727.00
GR	1358.90	4728.00	1359.00	4734.00	1359.00	4738.00	1358.50	4746.00	1358.50	4751.00
GR	1358.10	4764.00	1358.30	4769.00	1358.90	4776.00	1358.90	4778.00	1358.80	4785.00
GR	1358.80	4787.00	1358.70	4795.00	1358.70	4796.00	1358.60	4804.00	1358.60	4805.00
GR	1358.70	4812.00	1358.80	4815.00	1358.80	4820.00	1358.70	4824.00	1358.60	4828.00
GR	1358.60	4834.00	1358.70	4836.00	1358.60	4844.00	1358.60	4846.00	1358.50	4853.00
GR	1358.50	4854.00	1358.50	4862.00	1358.50	4865.00	1358.60	4871.00	1358.60	4880.00
GR	1358.60	4881.00	1358.50	4889.00	1358.50	4890.00	1358.50	4891.00	1358.60	4898.00
GR	1358.60	4901.00	1358.70	4905.00	1358.90	4913.00	1358.90	4914.00	1358.90	4922.00
GR	1358.80	4928.00	1358.70	4931.00	1358.80	4937.00	1358.80	4940.00	1358.80	4942.00
GR	1359.10	4949.00	1359.20	4958.00	1359.10	4966.00	1358.60	4969.00	1357.50	4975.00
GR	1356.10	4982.00	1356.00	4983.00	1355.40	4984.00	1350.80	4989.00	1348.90	4991.00
GR	1348.80	4994.00	1348.80	4995.00	1348.80	5005.00	1349.20	5005.00	1349.20	5006.00
GR	1349.70	5007.00	1350.40	5009.00	1351.30	5010.00	1354.40	5017.00	1355.30	5020.00
GR	1357.20	5027.00	1357.90	5032.00	1357.90	5038.00	1357.90	5040.00	1358.00	5040.00
GR	1358.80	5048.00	1358.60	5051.00	1358.80	5055.00	1358.80	5061.00	1358.70	5063.00
GR	1358.70	5070.00	1358.70	5071.00	1358.30	5079.00	1358.10	5081.00	1357.90	5086.00
GR	1357.80	5091.00	1357.70	5094.00	1357.70	5100.00	1357.70	5101.00	1357.70	5103.00
GR	1357.60	5109.00	1357.60	5112.00	1357.50	5118.00	1357.40	5123.00	1357.40	5126.00
GR	1357.50	5133.00	1357.60	5134.00	1357.60	5135.00	1357.70	5143.00	1357.70	5147.00
GR	1357.70	5152.00	1357.40	5159.00	1357.30	5161.00	1357.30	5166.00	1357.30	5170.00
GR	1357.30	5171.00	1357.40	5178.00	1357.30	5183.00	1357.30	5187.00	1357.60	5195.00
GR	1357.70	5196.00	1357.90	5204.00	1358.30	5207.00	1358.10	5213.00	1357.60	5219.00
GR	1357.60	5222.00	1358.20	5229.00	1358.30	5230.00	1358.30	5231.00	1357.20	5239.00
GR	1357.20	5240.00	1357.30	5244.00	1357.40	5249.00	1357.20	5257.00	1357.20	5258.00
GR	1357.20	5260.00	1357.20	5266.00	1357.40	5268.00	1357.70	5274.00	1357.30	5278.00
GR	1357.00	5281.00	1356.80	5289.00	1356.90	5297.00	1356.90	5299.00	1356.80	5304.00
GR	1356.80	5309.00	1356.80	5312.00	1356.90	5319.00	1356.90	5320.00	1356.80	5322.00
GR	1356.70	5328.00	1356.70	5330.00	1356.80	5335.00	1356.80	5340.00	1356.70	5343.00
GR	1356.60	5350.00	1356.70	5351.00	1358.60	5359.00	1358.70	5361.00	1358.10	5367.00
GR	1357.40	5370.00	1357.30	5376.00	1357.20	5379.00	1358.80	5384.00	1358.50	5392.00
GR	1358.60	5396.00	1358.10	5401.00	1358.10	5407.00	1358.00	5409.00	1357.70	5414.00
GR	1357.40	5417.00	1357.30	5419.00	1356.30	5426.00	1356.30	5430.00	1356.20	5434.00
GR	1356.70	5442.00	1356.70	5444.00	1356.50	5451.00	1356.60	5454.00	1356.70	5460.00

GR	1356.60	5463.00	1356.20	5477.00	1356.20	5478.00	1355.90	5487.00	1356.20	5492.00
GR	1356.10	5497.00	1355.90	5499.00	1356.50	5506.00	1356.50	5507.00	1356.50	5512.00
GR	1357.70	5514.00	1358.30	5517.00	1360.00	5528.00	1360.30	5530.00	1360.30	5536.00
GR	1360.30	5538.00	1360.40	5539.00	1360.50	5546.00	1359.70	5548.00	1357.90	5553.00
GR	1355.90	5555.00	1353.60	5559.00	1354.30	5559.00	1356.90	5567.00	1357.20	5568.00
GR	1357.40	5569.00	1358.70	5573.00	1359.60	5575.00	1360.40	5577.00	1361.70	5580.00
GR	1364.20	5584.00	1365.20	5586.00	1367.40	5590.00	1368.50	5592.00	1371.10	5596.00
GR	1372.90	5598.00	1378.90	5604.00	1379.60	5608.00	1381.70	5611.00	1386.60	5619.00
GR	1387.80	5620.00	1393.60	5628.00	1394.60	5631.00	1396.90	5638.00	1398.50	5644.00
GR	1399.00	5646.00	1400.90	5652.00	1400.60	5656.00	1400.80	5662.00	1401.20	5666.00
GR	1401.70	5670.00	1401.10	5672.00	1397.20	5687.00	1397.40	5688.00	1398.00	5689.00
GR	1398.30	5691.00	1399.80	5698.00	1397.40	5701.00	1399.10	5703.00	1404.50	5710.00
GR	1407.60	5717.00	1407.60	5721.00	1407.30	5722.00	1409.90	5731.00	1413.70	5740.00
X1	12094.00	387.00	4970.00	5028.00	301.00	304.00	311.00	0.00	0.00	0.00
GR	1364.70	4245.00	1364.80	4249.00	1364.80	4251.00	1364.90	4253.00	1364.80	4255.00
GR	1364.80	4257.00	1364.80	4258.00	1364.70	4260.00	1364.70	4261.00	1364.50	4263.00
GR	1364.40	4264.00	1364.20	4266.00	1363.90	4268.00	1363.80	4273.00	1363.50	4275.00
GR	1363.40	4276.00	1363.40	4278.00	1363.30	4280.00	1363.20	4281.00	1362.80	4284.00
GR	1362.90	4287.00	1362.20	4293.00	1362.20	4299.00	1362.20	4300.00	1362.20	4302.00
GR	1362.10	4303.00	1362.30	4307.00	1362.30	4310.00	1362.40	4311.00	1362.40	4313.00
GR	1362.20	4316.00	1362.20	4318.00	1362.30	4319.00	1362.00	4324.00	1362.00	4325.00
GR	1361.80	4328.00	1361.80	4332.00	1361.70	4333.00	1361.80	4334.00	1361.60	4337.00
GR	1361.70	4341.00	1361.70	4342.00	1361.80	4343.00	1362.30	4349.00	1362.30	4350.00
GR	1362.10	4352.00	1362.10	4353.00	1362.00	4355.00	1362.00	4357.00	1362.20	4358.00
GR	1362.00	4360.00	1362.00	4362.00	1362.10	4364.00	1361.80	4369.00	1361.70	4370.00
GR	1361.60	4371.00	1361.60	4372.00	1361.80	4374.00	1361.70	4376.00	1361.60	4380.00
GR	1362.20	4383.00	1362.30	4385.00	1362.40	4387.00	1362.00	4388.00	1362.10	4389.00
GR	1361.60	4393.00	1361.60	4395.00	1361.60	4396.00	1361.50	4398.00	1361.50	4401.00
GR	1361.50	4403.00	1361.50	4405.00	1361.50	4406.00	1361.60	4407.00	1361.80	4409.00
GR	1361.70	4410.00	1361.90	4412.00	1361.90	4414.00	1361.90	4415.00	1361.80	4417.00
GR	1361.90	4419.00	1361.70	4421.00	1361.90	4422.00	1362.00	4423.00	1362.60	4427.00
GR	1362.60	4428.00	1362.80	4429.00	1362.90	4432.00	1362.70	4438.00	1362.30	4440.00
GR	1361.90	4445.00	1361.90	4446.00	1361.80	4453.00	1361.80	4454.00	1361.70	4455.00
GR	1362.30	4457.00	1362.50	4458.00	1362.40	4462.00	1361.80	4467.00	1361.10	4483.00
GR	1361.00	4484.00	1361.00	4490.00	1361.00	4493.00	1360.80	4501.00	1360.80	4503.00
GR	1360.90	4510.00	1361.00	4511.00	1361.30	4517.00	1361.70	4529.00	1361.40	4536.00
GR	1361.30	4539.00	1361.30	4544.00	1361.30	4550.00	1361.50	4553.00	1361.40	4560.00
GR	1361.40	4561.00	1361.40	4563.00	1361.60	4569.00	1361.60	4571.00	1361.50	4576.00
GR	1361.90	4580.00	1362.00	4583.00	1361.40	4589.00	1361.50	4597.00	1361.60	4599.00
GR	1361.60	4602.00	1361.80	4608.00	1362.10	4614.00	1362.10	4617.00	1361.70	4623.00
GR	1361.60	4625.00	1361.60	4626.00	1361.90	4633.00	1361.90	4636.00	1362.20	4641.00
GR	1362.50	4647.00	1362.40	4648.00	1362.40	4652.00	1362.50	4657.00	1362.40	4666.00
GR	1362.30	4671.00	1362.10	4675.00	1362.30	4684.00	1362.30	4688.00	1362.20	4692.00
GR	1362.20	4695.00	1362.20	4701.00	1362.00	4706.00	1361.90	4709.00	1361.70	4715.00
GR	1361.70	4717.00	1361.70	4718.00	1361.90	4725.00	1362.00	4728.00	1361.70	4733.00
GR	1361.60	4739.00	1361.70	4742.00	1361.50	4750.00	1361.60	4758.00	1361.60	4763.00
GR	1361.70	4767.00	1361.60	4776.00	1361.50	4785.00	1361.40	4788.00	1361.20	4793.00
GR	1361.40	4799.00	1361.50	4802.00	1361.70	4810.00	1361.80	4811.00	1362.30	4820.00
GR	1361.70	4825.00	1361.20	4829.00	1361.30	4837.00	1361.30	4838.00	1361.30	4846.00
GR	1361.30	4849.00	1361.10	4854.00	1361.10	4859.00	1361.10	4861.00	1361.00	4869.00
GR	1360.90	4876.00	1360.90	4880.00	1361.00	4884.00	1361.10	4890.00	1361.10	4891.00
GR	1361.20	4896.00	1361.20	4900.00	1361.20	4901.00	1360.80	4909.00	1360.90	4914.00
GR	1360.90	4918.00	1361.40	4927.00	1361.40	4928.00	1361.50	4936.00	1361.60	4940.00
GR	1361.60	4942.00	1361.70	4945.00	1361.60	4954.00	1361.60	4955.00	1361.70	4964.00
GR	1361.60	4968.00	1361.60	4970.00	1354.70	4980.00	1352.10	4986.00	1351.90	4986.00
GR	1351.90	4995.00	1352.20	4997.00	1352.90	5000.00	1353.80	5005.00	1354.00	5006.00
GR	1354.30	5012.00	1354.70	5014.00	1355.40	5017.00	1356.10	5020.00	1358.90	5027.00
GR	1359.00	5028.00	1362.00	5035.00	1362.30	5036.00	1362.60	5039.00	1362.60	5041.00
GR	1362.20	5048.00	1362.10	5050.00	1362.00	5056.00	1361.90	5058.00	1361.70	5063.00
GR	1362.00	5068.00	1362.00	5070.00	1361.60	5075.00	1361.60	5076.00	1361.60	5077.00
GR	1361.60	5078.00	1361.60	5084.00	1361.60	5089.00	1361.60	5091.00	1361.60	5095.00
GR	1361.60	5099.00	1361.50	5103.00	1361.30	5108.00	1361.10	5114.00	1361.00	5116.00
GR	1360.90	5118.00	1360.80	5125.00	1360.80	5134.00	1361.10	5144.00	1361.10	5146.00
GR	1361.90	5148.00	1362.30	5151.00	1362.10	5152.00	1361.10	5157.00	1361.20	5159.00
GR	1361.10	5167.00	1361.00	5169.00	1361.10	5172.00	1361.10	5176.00	1361.20	5179.00
GR	1361.20	5184.00	1360.80	5191.00	1360.30	5198.00	1360.20	5202.00	1360.20	5205.00
GR	1360.30	5208.00	1360.40	5211.00	1360.40	5213.00	1360.40	5218.00	1360.40	5223.00
GR	1360.40	5225.00	1360.30	5228.00	1360.20	5232.00	1360.20	5234.00	1360.30	5239.00
GR	1360.30	5246.00	1360.40	5247.00	1360.40	5248.00	1360.40	5256.00	1360.30	5265.00
GR	1360.20	5272.00	1360.20	5278.00	1360.20	5280.00	1360.20	5283.00	1360.00	5288.00
GR	1359.90	5294.00	1359.90	5297.00	1359.90	5299.00	1359.90	5306.00	1359.80	5311.00

GR	1359.80	5315.00	1359.80	5319.00	1359.80	5322.00	1359.80	5325.00	1359.80	5329.00
GR	1359.90	5335.00	1359.90	5336.00	1359.90	5342.00	1359.80	5346.00	1359.80	5349.00
GR	1360.60	5355.00	1360.60	5356.00	1360.20	5363.00	1360.30	5367.00	1360.30	5370.00
GR	1360.30	5374.00	1360.30	5377.00	1360.30	5379.00	1360.20	5385.00	1360.20	5392.00
GR	1360.20	5393.00	1360.30	5401.00	1360.30	5410.00	1360.30	5418.00	1360.40	5420.00
GR	1360.30	5426.00	1360.40	5430.00	1360.40	5433.00	1360.50	5440.00	1360.50	5441.00
GR	1360.50	5443.00	1360.50	5449.00	1360.50	5455.00	1360.50	5458.00	1360.20	5466.00
GR	1360.30	5469.00	1360.60	5473.00	1360.40	5478.00	1360.40	5480.00	1360.50	5482.00
GR	1360.20	5493.00	1360.20	5495.00	1360.30	5497.00	1360.50	5501.00	1360.60	5504.00
GR	1360.80	5508.00	1361.00	5513.00	1361.00	5514.00	1361.00	5515.00	1361.10	5521.00
GR	1361.50	5527.00	1361.50	5529.00	1361.90	5531.00	1362.20	5535.00	1362.30	5537.00
GR	1362.20	5538.00	1361.20	5545.00	1360.80	5549.00	1360.90	5556.00	1360.90	5559.00
GR	1361.00	5563.00	1361.10	5569.00	1361.10	5570.00	1361.10	5571.00	1361.30	5577.00
GR	1361.20	5584.00	1361.20	5585.00	1361.20	5586.00	1361.40	5594.00	1361.30	5601.00
GR	1361.30	5603.00	1361.40	5606.00	1361.40	5611.00	1361.20	5617.00	1361.00	5618.00
GR	1361.00	5619.00	1361.10	5622.00	1361.20	5627.00	1361.30	5629.00	1361.40	5634.00
GR	1361.60	5639.00	1361.70	5640.00	1361.60	5643.00	1361.60	5649.00	1362.20	5657.00
GR	1362.40	5658.00	1362.40	5659.00	1362.10	5665.00	1362.30	5668.00	1362.40	5672.00
GR	1362.80	5678.00	1362.80	5679.00	1362.60	5685.00	1362.70	5687.00	1362.90	5693.00
GR	1362.60	5696.00	1362.60	5701.00	1362.70	5706.00	1362.70	5715.00	1363.00	5719.00
GR	1363.90	5723.00	1364.40	5728.00						
X1	12370.00	343.00	4977.00	5026.00	307.00	267.00	276.00	0.00	0.00	0.00
GR	1367.90	4179.00	1368.00	4181.00	1367.90	4182.00	1367.90	4183.00	1367.40	4189.00
GR	1367.30	4190.00	1367.30	4191.00	1367.60	4194.00	1367.70	4195.00	1367.90	4197.00
GR	1367.30	4201.00	1366.90	4202.00	1367.20	4205.00	1366.60	4212.00	1366.40	4213.00
GR	1366.60	4214.00	1366.60	4217.00	1367.10	4225.00	1366.80	4228.00	1366.70	4230.00
GR	1366.40	4235.00	1366.70	4241.00	1366.40	4242.00	1366.40	4244.00	1366.20	4249.00
GR	1366.30	4253.00	1366.00	4258.00	1366.20	4260.00	1366.30	4261.00	1366.40	4262.00
GR	1366.40	4268.00	1366.50	4270.00	1366.40	4274.00	1366.20	4281.00	1366.60	4288.00
GR	1366.80	4290.00	1366.90	4296.00	1366.80	4302.00	1366.80	4303.00	1367.00	4307.00
GR	1367.00	4309.00	1366.80	4310.00	1366.70	4312.00	1366.90	4314.00	1366.80	4315.00
GR	1367.10	4318.00	1366.70	4321.00	1366.70	4322.00	1366.70	4325.00	1366.70	4326.00
GR	1366.70	4327.00	1366.70	4330.00	1366.70	4331.00	1366.80	4332.00	1366.80	4333.00
GR	1366.80	4334.00	1366.60	4337.00	1366.60	4338.00	1366.50	4339.00	1366.40	4340.00
GR	1365.90	4346.00	1365.80	4348.00	1365.80	4350.00	1365.40	4356.00	1365.40	4357.00
GR	1365.30	4358.00	1365.40	4362.00	1365.60	4366.00	1365.50	4367.00	1365.60	4368.00
GR	1365.60	4371.00	1365.60	4374.00	1365.60	4375.00	1365.60	4376.00	1365.60	4378.00
GR	1365.60	4379.00	1365.40	4382.00	1365.00	4384.00	1365.10	4385.00	1365.20	4387.00
GR	1365.20	4388.00	1365.50	4400.00	1365.10	4405.00	1365.40	4410.00	1365.30	4411.00
GR	1365.30	4412.00	1364.30	4420.00	1364.20	4428.00	1364.20	4429.00	1364.20	4436.00
GR	1364.00	4443.00	1364.10	4452.00	1364.40	4459.00	1364.40	4461.00	1364.50	4463.00
GR	1364.70	4469.00	1364.80	4476.00	1364.90	4477.00	1365.50	4490.00	1365.20	4492.00
GR	1365.10	4497.00	1365.10	4499.00	1365.00	4500.00	1365.20	4504.00	1365.50	4507.00
GR	1365.50	4510.00	1365.40	4513.00	1365.50	4517.00	1365.60	4521.00	1365.50	4527.00
GR	1365.40	4532.00	1365.60	4537.00	1365.70	4538.00	1365.60	4542.00	1365.50	4543.00
GR	1365.50	4544.00	1365.40	4554.00	1365.30	4557.00	1366.70	4562.00	1366.70	4565.00
GR	1366.10	4571.00	1365.80	4573.00	1365.00	4579.00	1365.30	4583.00	1365.40	4585.00
GR	1365.50	4592.00	1365.60	4594.00	1365.50	4597.00	1365.70	4603.00	1365.70	4605.00
GR	1365.50	4612.00	1365.10	4623.00	1364.70	4632.00	1364.50	4649.00	1364.70	4652.00
GR	1365.00	4655.00	1365.00	4669.00	1364.40	4673.00	1364.40	4677.00	1364.40	4678.00
GR	1365.30	4684.00	1365.10	4688.00	1365.40	4693.00	1364.40	4704.00	1364.50	4706.00
GR	1364.60	4707.00	1364.30	4712.00	1364.20	4729.00	1365.60	4737.00	1364.80	4744.00
GR	1364.80	4745.00	1364.60	4763.00	1365.30	4768.00	1365.50	4770.00	1365.40	4773.00
GR	1365.40	4781.00	1365.30	4782.00	1364.90	4786.00	1365.20	4789.00	1365.00	4794.00
GR	1364.80	4805.00	1364.90	4814.00	1364.90	4815.00	1364.90	4819.00	1364.90	4823.00
GR	1364.70	4831.00	1364.60	4833.00	1364.70	4839.00	1364.70	4846.00	1364.70	4855.00
GR	1364.70	4863.00	1364.70	4864.00	1365.00	4872.00	1364.80	4880.00	1364.80	4881.00
GR	1364.60	4887.00	1364.70	4890.00	1364.70	4893.00	1364.70	4899.00	1364.80	4908.00
GR	1364.80	4914.00	1364.80	4916.00	1364.80	4918.00	1364.90	4923.00	1365.00	4926.00
GR	1365.20	4930.00	1365.80	4936.00	1365.70	4937.00	1365.70	4938.00	1365.80	4939.00
GR	1365.50	4944.00	1365.30	4948.00	1365.30	4950.00	1365.30	4952.00	1365.30	4956.00
GR	1365.40	4958.00	1365.70	4962.00	1365.20	4968.00	1364.00	4973.00	1362.70	4975.00
GR	1362.40	4977.00	1360.00	4983.00	1358.20	4986.00	1357.90	4987.00	1356.00	4989.00
GR	1355.70	4993.00	1355.60	4994.00	1355.50	4995.00	1355.50	5005.00	1355.60	5006.00
GR	1357.80	5010.00	1358.00	5011.00	1359.10	5015.00	1360.80	5019.00	1362.40	5024.00
GR	1362.90	5026.00	1362.90	5027.00	1362.50	5033.00	1362.20	5037.00	1362.40	5039.00
GR	1363.00	5042.00	1363.50	5045.00	1363.80	5047.00	1364.70	5051.00	1365.90	5057.00
GR	1365.90	5059.00	1365.80	5062.00	1365.70	5072.00	1365.70	5081.00	1365.60	5089.00
GR	1365.50	5090.00	1365.50	5091.00	1365.50	5094.00	1365.40	5098.00	1365.50	5100.00
GR	1365.50	5103.00	1365.60	5105.00	1365.50	5113.00	1365.40	5114.00	1365.60	5123.00
GR	1365.80	5126.00	1365.80	5133.00	1365.00	5136.00	1365.40	5137.00	1366.80	5140.00

```
GR  1367.60  5142.00  1368.30  5149.00  1368.50  5151.00  1368.50  5153.00  1368.40  5158.00
GR  1368.40  5165.00  1368.40  5166.00  1368.30  5168.00  1368.20  5175.00  1368.20  5178.00
GR  1368.10  5183.00  1368.10  5191.00  1368.10  5192.00  1368.00  5198.00  1368.10  5200.00
GR  1368.10  5202.00  1368.10  5206.00  1368.10  5217.00  1368.10  5219.00  1368.10  5220.00
GR  1368.30  5227.00  1368.30  5232.00  1368.30  5234.00  1368.50  5239.00  1368.60  5242.00
GR  1368.70  5243.00  1369.10  5249.00  1368.80  5253.00  1368.80  5257.00  1368.60  5264.00
GR  1368.60  5266.00  1368.50  5273.00  1368.70  5278.00  1368.90  5282.00  1368.60  5291.00
GR  1368.60  5292.00  1369.00  5298.00  1368.60  5305.00  1368.60  5307.00  1369.00  5312.00
GR  1369.20  5315.00  1369.10  5317.00  1368.80  5322.00  1368.80  5324.00  1368.80  5332.00
GR  1368.80  5341.00  1368.80  5347.00  1368.90  5351.00  1368.90  5352.00  1368.80  5356.00
GR  1368.70  5359.00  1368.60  5361.00  1368.40  5367.00  1367.20  5373.00  1366.70  5375.00
GR  1367.20  5376.00  1368.80  5379.00  1371.40  5383.00  1374.80  5388.00  1377.70  5392.00
GR  1381.90  5399.00  1385.00  5404.00  1387.20  5407.00  1391.20  5412.00  1392.10  5413.00
GR  1393.50  5415.00  1397.00  5420.00  1398.30  5423.00  1401.50  5428.00  1405.60  5434.00
GR  1406.60  5435.00  1409.00  5439.00  1411.40  5442.00  1412.60  5444.00  1416.00  5448.00
GR  1419.80  5454.00  1420.40  5455.00  1422.00  5457.00  1424.90  5462.00  1426.90  5465.00
GR  1430.50  5470.00  1436.00  5477.00  1436.30  5478.00  1436.80  5479.00  1442.80  5485.00
GR  1442.70  5486.00  1444.40  5489.00  1445.20  5491.00  1445.50  5493.00  1445.10  5498.00
GR  1444.70  5501.00  1444.40  5503.00  1443.60  5507.00  1443.40  5509.00  1443.60  5510.00
GR  1445.00  5514.00  1446.60  5518.00  1447.30  5520.00
X1 12657.00   314.00  4958.00  5016.00   308.00   297.00   287.00     0.00     0.00     0.00
X3                                                                                      4.00
GR  1376.90  4094.00  1376.80  4096.00  1376.50  4097.00  1376.60  4101.00  1376.30  4103.00
GR  1374.90  4109.00  1374.70  4110.00  1373.90  4113.00  1373.00  4116.00  1372.30  4128.00
GR  1372.20  4131.00  1372.20  4132.00  1371.80  4138.00  1371.70  4140.00  1371.60  4141.00
GR  1372.10  4142.00  1372.00  4144.00  1371.80  4146.00  1371.70  4147.00  1371.30  4151.00
GR  1371.10  4153.00  1371.20  4156.00  1371.40  4160.00  1371.50  4163.00  1371.50  4166.00
GR  1371.30  4168.00  1371.20  4171.00  1371.00  4173.00  1370.80  4176.00  1370.70  4177.00
GR  1370.50  4180.00  1370.40  4181.00  1370.40  4184.00  1370.40  4185.00  1370.20  4186.00
GR  1369.90  4187.00  1369.80  4188.00  1369.80  4189.00  1369.90  4192.00  1369.90  4195.00
GR  1370.10  4196.00  1370.10  4198.00  1370.20  4199.00  1369.80  4205.00  1369.70  4207.00
GR  1369.70  4208.00  1369.70  4211.00  1369.60  4212.00  1369.80  4214.00  1369.90  4216.00
GR  1369.90  4217.00  1369.80  4220.00  1369.80  4221.00  1369.80  4223.00  1369.90  4225.00
GR  1369.90  4226.00  1369.90  4228.00  1369.80  4229.00  1369.80  4230.00  1370.10  4236.00
GR  1370.00  4237.00  1370.00  4238.00  1370.00  4243.00  1369.80  4245.00  1369.90  4246.00
GR  1369.90  4247.00  1369.90  4250.00  1370.00  4252.00  1369.90  4253.00  1369.90  4256.00
GR  1370.00  4258.00  1370.10  4259.00  1369.90  4261.00  1370.10  4264.00  1370.00  4266.00
GR  1369.90  4268.00  1370.00  4269.00  1370.00  4270.00  1369.90  4274.00  1369.90  4275.00
GR  1369.90  4277.00  1369.80  4278.00  1369.80  4280.00  1369.60  4281.00  1369.60  4282.00
GR  1369.60  4283.00  1369.80  4285.00  1369.70  4286.00  1369.70  4287.00  1369.80  4289.00
GR  1369.80  4291.00  1369.80  4293.00  1369.80  4294.00  1369.60  4298.00  1369.50  4299.00
GR  1369.70  4303.00  1369.60  4305.00  1369.60  4307.00  1369.60  4308.00  1369.50  4309.00
GR  1369.60  4312.00  1369.70  4313.00  1369.50  4315.00  1369.50  4316.00  1369.50  4318.00
GR  1369.40  4320.00  1369.30  4321.00  1369.30  4322.00  1369.30  4325.00  1369.30  4328.00
GR  1369.30  4329.00  1369.40  4330.00  1369.40  4336.00  1369.50  4343.00  1369.40  4345.00
GR  1369.60  4346.00  1369.40  4352.00  1369.20  4354.00  1369.10  4360.00  1369.10  4361.00
GR  1369.10  4362.00  1369.20  4367.00  1369.00  4374.00  1368.80  4380.00  1368.90  4383.00
GR  1368.90  4385.00  1369.00  4387.00  1369.10  4392.00  1369.10  4398.00  1368.80  4408.00
GR  1368.80  4413.00  1368.80  4418.00  1368.90  4428.00  1368.90  4432.00  1368.90  4436.00
GR  1368.90  4440.00  1368.80  4443.00  1368.80  4446.00  1368.60  4449.00  1368.70  4452.00
GR  1368.70  4455.00  1368.70  4461.00  1368.70  4464.00  1368.60  4467.00  1368.40  4472.00
GR  1368.30  4474.00  1368.30  4477.00  1368.50  4479.00  1368.70  4480.00  1369.40  4485.00
GR  1369.90  4488.00  1369.60  4491.00  1369.40  4497.00  1369.50  4507.00  1369.10  4514.00
GR  1368.80  4518.00  1369.20  4525.00  1369.40  4526.00  1369.80  4531.00  1369.60  4533.00
GR  1369.60  4538.00  1369.60  4540.00  1369.60  4543.00  1369.60  4546.00  1369.60  4549.00
GR  1369.70  4552.00  1369.80  4556.00  1369.80  4559.00  1369.70  4561.00  1369.60  4564.00
GR  1369.40  4569.00  1369.70  4578.00  1369.70  4582.00  1369.60  4585.00  1369.70  4588.00
GR  1369.70  4593.00  1369.80  4600.00  1369.80  4601.00  1369.80  4602.00  1369.20  4614.00
GR  1369.20  4617.00  1369.20  4622.00  1369.20  4625.00  1369.10  4633.00  1369.10  4634.00
GR  1368.90  4637.00  1368.90  4645.00  1368.90  4646.00  1368.90  4647.00  1369.00  4657.00
GR  1369.00  4660.00  1368.60  4675.00  1368.60  4676.00  1369.20  4683.00  1369.60  4689.00
GR  1369.60  4695.00  1369.20  4705.00  1369.50  4713.00  1369.60  4716.00  1369.60  4720.00
GR  1369.80  4732.00  1370.20  4748.00  1370.10  4752.00  1369.70  4765.00  1369.70  4766.00
GR  1369.90  4780.00  1369.90  4785.00  1369.90  4799.00  1370.35  4812.00  1370.80  4825.00
GR  1370.80  4827.00  1370.30  4832.00  1369.80  4840.00  1369.20  4849.00  1369.20  4850.00
GR  1369.00  4854.00  1369.40  4868.00  1369.50  4874.00  1369.30  4877.00  1369.10  4883.00
GR  1369.40  4890.00  1369.40  4892.00  1369.30  4896.00  1369.20  4899.00  1369.20  4901.00
GR  1369.00  4906.00  1368.90  4912.00  1368.80  4914.00  1368.70  4921.00  1368.70  4923.00
GR  1368.80  4928.00  1368.60  4934.00  1368.70  4936.00  1368.20  4940.00  1368.30  4942.00
GR  1368.00  4944.00  1368.00  4946.00  1368.00  4952.00  1368.00  4956.00  1368.00  4958.00
GR  1367.60  4959.00  1367.20  4960.00  1364.30  4968.00  1364.40  4974.00  1364.40  4976.00
```

GR	1364.00	4979.00	1363.40	4984.00	1361.10	4988.00	1359.10	4993.00	1358.90	4995.00
GR	1358.90	5004.00	1359.00	5005.00	1359.70	5006.00	1361.10	5008.00	1364.10	5012.00
GR	1366.70	5016.00	1367.10	5022.00	1367.30	5024.00	1367.30	5026.00	1367.50	5032.00
GR	1367.60	5034.00	1367.60	5035.00	1366.70	5046.00	1366.40	5051.00	1366.40	5059.00
GR	1366.80	5071.00	1366.70	5081.00	1366.60	5083.00	1366.80	5086.00	1367.50	5088.00
GR	1367.60	5089.00	1367.80	5095.00	1368.30	5102.00	1368.50	5103.00	1370.30	5112.00
GR	1369.80	5120.00	1369.80	5121.00	1369.80	5122.00	1370.00	5129.00	1370.00	5132.00
GR	1370.00	5134.00	1369.95	5151.00	1369.90	5168.00	1369.95	5180.50	1370.00	5193.00
GR	1369.90	5195.00	1370.30	5200.00	1370.70	5202.00	1370.80	5203.00	1370.70	5211.00
GR	1370.15	5222.50	1369.60	5234.00	1369.60	5236.00	1369.80	5240.00	1370.10	5244.00
GR	1369.50	5254.00	1369.30	5255.00	1369.30	5259.00	1369.70	5272.00	1370.30	5291.00
GR	1370.30	5294.00	1369.50	5307.00	1369.40	5308.00	1369.20	5318.00	1369.20	5319.00
GR	1369.20	5320.00	1369.10	5325.00	1369.10	5329.00	1368.90	5332.00	1368.10	5339.00
GR	1368.10	5341.00	1369.70	5344.00	1372.80	5351.00	1373.20	5351.00	1374.60	5354.00
GR	1377.10	5359.00	1379.20	5362.00	1384.70	5371.00				
X1	12784.00	70.00	4961.00	5024.00	132.00	124.00	127.00	0.00	0.00	0.00
XF	4849.00	5130.00	0.00	0.00	0.00	0.00	0.00	5.00	0.00	0.00
GR	1390.90	4840.00	1390.90	4849.00	1370.90	4853.00	1370.90	4856.00	1370.80	4858.00
GR	1370.80	4860.00	1370.60	4866.00	1370.60	4868.00	1370.30	4874.00	1370.30	4875.00
GR	1370.30	4877.00	1370.20	4880.00	1370.10	4881.00	1370.00	4886.00	1370.10	4889.00
GR	1370.40	4897.00	1370.40	4898.00	1370.30	4906.00	1370.30	4910.00	1370.30	4914.00
GR	1370.40	4919.00	1370.40	4922.00	1369.70	4930.00	1369.50	4938.00	1369.20	4946.00
GR	1369.20	4948.00	1368.80	4953.00	1368.30	4961.00	1367.70	4962.00	1365.60	4973.00
GR	1365.70	4975.00	1365.50	4976.00	1365.30	4979.00	1365.40	4982.00	1362.90	4988.00
GR	1360.20	4992.00	1359.80	4993.00	1358.90	4994.00	1358.90	5000.00	1360.10	5000.00
GR	1362.50	5007.00	1365.10	5013.00	1366.10	5015.00	1366.30	5016.00	1368.60	5024.00
GR	1368.50	5028.00	1368.70	5032.00	1368.60	5036.00	1368.70	5040.00	1369.20	5045.00
GR	1369.40	5049.00	1369.40	5054.00	1369.40	5057.00	1369.70	5060.00	1369.80	5064.00
GR	1370.10	5069.00	1370.30	5071.00	1370.70	5079.00	1370.80	5080.00	1371.70	5088.00
GR	1371.90	5089.00	1371.60	5096.00	1371.50	5099.00	1371.80	5104.00	1371.90	5109.00
GR	1372.10	5110.00	1372.60	5118.00	1372.70	5129.00	1383.30	5130.00	1383.80	5139.00
X1	12997.00	341.00	4967.00	5026.00	214.00	213.00	213.00	0.00	0.00	0.00
GR	1385.90	4077.00	1385.90	4078.00	1385.60	4081.00	1384.80	4086.00	1384.50	4089.00
GR	1383.80	4095.00	1383.40	4097.00	1383.30	4099.00	1382.90	4101.00	1382.70	4102.00
GR	1382.50	4105.00	1381.80	4109.00	1381.30	4112.00	1380.50	4114.00	1379.80	4116.00
GR	1379.40	4119.00	1379.40	4120.00	1379.20	4123.00	1379.20	4124.00	1379.10	4126.00
GR	1379.00	4128.00	1379.00	4130.00	1378.90	4132.00	1378.80	4133.00	1378.90	4135.00
GR	1378.90	4136.00	1378.90	4138.00	1378.80	4140.00	1378.60	4141.00	1378.50	4142.00
GR	1378.60	4143.00	1378.70	4144.00	1378.60	4146.00	1378.40	4148.00	1378.50	4149.00
GR	1378.40	4151.00	1378.40	4152.00	1378.50	4153.00	1378.40	4157.00	1378.60	4159.00
GR	1378.80	4161.00	1378.90	4163.00	1378.90	4165.00	1378.70	4167.00	1378.40	4170.00
GR	1378.40	4171.00	1378.40	4172.00	1378.30	4173.00	1378.30	4174.00	1378.40	4176.00
GR	1378.20	4178.00	1378.20	4179.00	1378.20	4180.00	1378.30	4182.00	1378.40	4184.00
GR	1378.40	4187.00	1378.30	4188.00	1378.10	4191.00	1378.30	4194.00	1378.30	4195.00
GR	1378.30	4197.00	1378.30	4199.00	1378.30	4200.00	1378.30	4201.00	1378.20	4202.00
GR	1378.10	4204.00	1378.00	4206.00	1377.80	4208.00	1377.80	4209.00	1377.70	4211.00
GR	1377.70	4213.00	1377.70	4214.00	1377.50	4217.00	1377.40	4220.00	1377.40	4221.00
GR	1377.30	4222.00	1377.30	4223.00	1377.20	4224.00	1376.90	4227.00	1376.80	4230.00
GR	1376.80	4231.00	1376.60	4233.00	1376.70	4234.00	1376.70	4235.00	1376.60	4237.00
GR	1376.60	4239.00	1376.60	4240.00	1376.50	4243.00	1376.50	4244.00	1376.50	4245.00
GR	1376.50	4248.00	1376.50	4250.00	1376.50	4251.00	1376.50	4253.00	1376.60	4254.00
GR	1376.50	4255.00	1376.50	4256.00	1376.50	4257.00	1376.50	4258.00	1376.40	4259.00
GR	1376.30	4260.00	1376.20	4262.00	1376.20	4263.00	1376.20	4264.00	1375.90	4268.00
GR	1376.00	4270.00	1375.80	4271.00	1375.80	4273.00	1375.50	4277.00	1375.50	4281.00
GR	1375.30	4284.00	1375.10	4290.00	1375.10	4291.00	1375.00	4293.00	1374.80	4298.00
GR	1374.50	4302.00	1374.40	4304.00	1374.20	4307.00	1374.10	4310.00	1373.90	4312.00
GR	1373.70	4317.00	1373.50	4321.00	1373.50	4325.00	1373.40	4329.00	1373.40	4332.00
GR	1373.40	4335.00	1373.40	4338.00	1373.30	4343.00	1373.20	4347.00	1373.10	4352.00
GR	1372.90	4357.00	1372.80	4360.00	1372.80	4365.00	1372.80	4367.00	1372.80	4369.00
GR	1373.00	4375.00	1373.20	4381.00	1373.20	4384.00	1373.20	4388.00	1373.10	4392.00
GR	1372.90	4399.00	1372.80	4401.00	1372.80	4402.00	1372.60	4409.00	1372.70	4415.00
GR	1372.70	4417.00	1372.80	4420.00	1372.70	4425.00	1372.70	4433.00	1372.70	4434.00
GR	1372.70	4440.00	1372.60	4445.00	1372.60	4447.00	1372.80	4451.00	1373.10	4454.00
GR	1373.10	4457.00	1373.00	4461.00	1372.70	4466.00	1372.50	4469.00	1372.50	4472.00
GR	1372.70	4479.00	1372.70	4486.00	1372.80	4488.00	1372.60	4492.00	1372.50	4496.00
GR	1372.60	4499.00	1373.00	4504.00	1373.10	4507.00	1373.20	4511.00	1373.30	4519.00
GR	1373.30	4528.00	1373.20	4534.00	1373.20	4537.00	1373.20	4538.00	1373.20	4545.00
GR	1373.30	4551.00	1373.30	4552.00	1373.30	4555.00	1372.30	4566.00	1372.00	4570.00
GR	1372.00	4571.00	1372.00	4572.00	1373.00	4584.00	1372.90	4588.00	1372.90	4595.00
GR	1372.70	4599.00	1373.10	4603.00	1373.40	4608.00	1373.10	4612.00	1373.10	4615.00
GR	1373.60	4624.00	1373.60	4632.00	1373.60	4639.00	1373.50	4648.00	1373.40	4655.00

GR	1373.40	4656.00	1373.40	4657.00	1373.40	4674.00	1373.40	4676.00	1373.50	4682.00
GR	1373.40	4689.00	1373.40	4690.00	1373.40	4696.00	1373.40	4700.00	1373.30	4702.00
GR	1373.50	4706.00	1373.60	4709.00	1373.60	4711.00	1373.50	4716.00	1374.10	4723.00
GR	1374.00	4724.00	1373.00	4734.00	1373.10	4736.00	1373.10	4739.00	1373.00	4744.00
GR	1373.10	4748.00	1373.20	4752.00	1373.20	4757.00	1373.30	4761.00	1373.20	4770.00
GR	1373.00	4779.00	1372.90	4782.00	1372.80	4787.00	1372.80	4794.00	1372.70	4795.00
GR	1372.70	4798.00	1372.40	4804.00	1372.50	4809.00	1372.70	4813.00	1372.80	4816.00
GR	1373.00	4821.00	1373.20	4828.00	1373.20	4829.00	1372.70	4835.00	1372.60	4839.00
GR	1372.70	4841.00	1373.50	4845.00	1373.80	4847.00	1373.70	4849.00	1372.90	4854.00
GR	1372.80	4860.00	1372.80	4861.00	1372.80	4863.00	1372.70	4868.00	1373.00	4871.00
GR	1373.70	4874.00	1373.70	4879.00	1373.80	4882.00	1373.40	4887.00	1373.00	4892.00
GR	1373.00	4895.00	1373.30	4900.00	1373.20	4905.00	1373.20	4909.00	1373.00	4913.00
GR	1372.80	4917.00	1372.70	4920.00	1372.30	4925.00	1372.30	4931.00	1372.30	4933.00
GR	1372.60	4934.00	1373.20	4939.00	1372.70	4944.00	1372.70	4945.00	1372.70	4947.00
GR	1372.80	4952.00	1373.20	4955.00	1373.00	4959.00	1372.50	4962.00	1372.30	4965.00
GR	1371.70	4967.00	1369.10	4972.00	1367.80	4976.00	1364.10	4984.00	1363.10	4985.00
GR	1362.10	4985.00	1362.10	4994.00	1363.30	4996.00	1363.40	4998.00	1364.40	5003.00
GR	1366.40	5009.00	1367.10	5011.00	1367.60	5014.00	1367.70	5015.00	1369.30	5020.00
GR	1372.70	5026.00	1373.60	5029.00	1374.40	5032.00	1375.20	5039.00	1376.00	5046.00
GR	1376.20	5048.00	1376.10	5049.00	1376.30	5056.00	1376.70	5059.00	1376.70	5069.00
GR	1376.00	5073.00	1376.20	5079.00	1376.20	5081.00	1376.20	5090.00	1376.10	5091.00
GR	1376.00	5099.00	1376.10	5108.00	1376.10	5113.00	1376.20	5118.00	1376.50	5124.00
GR	1376.70	5127.00	1376.00	5136.00	1376.40	5145.00	1376.50	5146.00	1376.90	5147.00
GR	1377.80	5149.00	1381.00	5154.00	1383.00	5161.00	1383.90	5163.00	1384.00	5164.00
GR	1384.10	5168.00	1384.10	5173.00	1383.90	5180.00	1383.90	5182.00	1384.10	5189.00
GR	1384.10	5191.00	1384.00	5199.00	1383.90	5207.00	1383.90	5211.00	1384.00	5215.00
GR	1384.00	5221.00	1384.00	5223.00	1384.10	5231.00	1384.10	5232.00	1384.40	5234.00
GR	1384.20	5240.00	1384.20	5246.00	1384.20	5249.00	1384.30	5250.00	1384.40	5255.00
GR	1384.50	5259.00	1384.40	5266.00	1384.40	5268.00	1384.40	5277.00	1384.40	5278.00
GR	1384.80	5282.00								
X1	13357.00	285.00	4933.00	5036.00	299.00	365.00	360.00	0.00	0.00	0.00
GR	1399.80	4080.00	1399.30	4081.00	1396.70	4086.00	1392.60	4094.00	1392.20	4095.00
GR	1392.10	4096.00	1391.40	4098.00	1391.30	4099.00	1391.00	4100.00	1389.50	4108.00
GR	1389.20	4111.00	1388.30	4112.00	1387.20	4117.00	1387.00	4118.00	1386.80	4119.00
GR	1385.40	4125.00	1385.30	4128.00	1385.20	4130.00	1385.30	4132.00	1385.50	4134.00
GR	1385.60	4135.00	1385.40	4136.00	1385.20	4140.00	1384.80	4143.00	1384.90	4144.00
GR	1384.80	4146.00	1384.40	4147.00	1384.30	4149.00	1384.10	4151.00	1384.00	4152.00
GR	1383.90	4153.00	1383.80	4155.00	1383.70	4156.00	1383.70	4157.00	1383.60	4159.00
GR	1383.50	4160.00	1383.60	4161.00	1383.60	4162.00	1383.40	4164.00	1383.30	4167.00
GR	1383.20	4168.00	1383.50	4169.00	1383.60	4170.00	1383.80	4172.00	1383.50	4175.00
GR	1383.40	4176.00	1383.40	4178.00	1383.60	4182.00	1383.60	4183.00	1383.30	4186.00
GR	1383.70	4189.00	1383.80	4190.00	1383.80	4194.00	1383.90	4195.00	1383.90	4197.00
GR	1383.80	4200.00	1384.00	4204.00	1384.00	4204.00	1384.10	4206.00	1384.20	4207.00
GR	1384.40	4211.00	1384.20	4214.00	1384.20	4215.00	1384.30	4216.00	1384.10	4218.00
GR	1384.10	4222.00	1383.90	4225.00	1383.90	4226.00	1383.90	4227.00	1383.80	4228.00
GR	1383.90	4230.00	1383.80	4233.00	1383.60	4235.00	1383.70	4236.00	1383.70	4237.00
GR	1383.30	4243.00	1383.30	4245.00	1383.30	4246.00	1382.90	4251.00	1382.80	4253.00
GR	1382.90	4259.00	1382.80	4261.00	1382.40	4267.00	1382.30	4270.00	1382.60	4273.00
GR	1382.50	4278.00	1382.10	4282.00	1382.10	4283.00	1381.90	4286.00	1381.70	4290.00
GR	1381.60	4292.00	1381.40	4298.00	1381.30	4302.00	1381.20	4306.00	1381.00	4313.00
GR	1380.90	4315.00	1380.70	4322.00	1380.70	4324.00	1380.60	4331.00	1380.40	4336.00
GR	1380.30	4340.00	1379.90	4347.00	1379.90	4349.00	1379.70	4354.00	1379.70	4357.00
GR	1379.60	4359.00	1379.50	4365.00	1379.30	4369.00	1379.20	4372.00	1379.00	4380.00
GR	1378.90	4389.00	1378.80	4391.00	1378.60	4397.00	1378.40	4403.00	1378.30	4406.00
GR	1378.10	4415.00	1378.00	4416.00	1377.80	4424.00	1377.80	4427.00	1377.80	4432.00
GR	1377.80	4438.00	1377.80	4441.00	1377.70	4448.00	1377.60	4449.00	1377.60	4450.00
GR	1377.40	4458.00	1377.30	4461.00	1377.10	4466.00	1377.10	4471.00	1377.10	4475.00
GR	1376.80	4482.00	1376.80	4483.00	1377.20	4488.00	1377.40	4492.00	1377.40	4494.00
GR	1377.10	4501.00	1376.60	4508.00	1376.40	4510.00	1376.90	4519.00	1376.90	4520.00
GR	1376.90	4527.00	1376.70	4536.00	1376.40	4542.00	1376.30	4544.00	1376.90	4552.00
GR	1376.90	4553.00	1376.90	4562.00	1377.00	4566.00	1377.20	4571.00	1377.30	4580.00
GR	1377.30	4582.00	1377.30	4587.00	1377.30	4589.00	1377.40	4595.00	1377.40	4598.00
GR	1377.30	4602.00	1377.40	4608.00	1377.50	4610.00	1377.40	4617.00	1377.40	4618.00
GR	1377.30	4619.00	1377.30	4625.00	1377.30	4627.00	1377.40	4633.00	1377.60	4638.00
GR	1377.60	4641.00	1377.90	4649.00	1377.80	4651.00	1377.40	4658.00	1377.40	4660.00
GR	1377.60	4665.00	1377.40	4673.00	1377.40	4675.00	1377.40	4677.00	1377.40	4684.00
GR	1377.40	4685.00	1377.40	4692.00	1377.40	4694.00	1377.50	4699.00	1377.50	4703.00
GR	1377.50	4706.00	1377.50	4712.00	1377.50	4713.00	1377.60	4717.00	1377.70	4721.00
GR	1377.60	4722.00	1377.70	4729.00	1377.80	4732.00	1377.90	4737.00	1377.90	4743.00
GR	1377.90	4745.00	1377.90	4753.00	1378.00	4760.00	1378.00	4762.00	1378.20	4767.00
GR	1378.30	4772.00	1378.40	4775.00	1378.50	4781.00	1378.50	4782.00	1378.50	4791.00

GR	1378.10	4795.00	1378.40	4797.00	1378.40	4801.00	1378.30	4805.00	1378.60	4810.00
GR	1378.50	4812.00	1378.00	4816.00	1377.80	4820.00	1378.70	4829.00	1378.80	4831.00
GR	1378.60	4835.00	1378.50	4841.00	1378.50	4843.00	1378.40	4849.00	1378.40	4851.00
GR	1377.80	4858.00	1377.90	4861.00	1378.50	4866.00	1378.40	4870.00	1378.50	4873.00
GR	1379.00	4879.00	1378.90	4881.00	1378.10	4887.00	1377.90	4889.00	1377.90	4897.00
GR	1377.90	4900.00	1377.70	4901.00	1376.00	4921.00	1376.00	4921.00	1375.90	4923.00
GR	1375.30	4930.00	1375.10	4933.00	1374.40	4940.00	1373.90	4946.00	1373.80	4949.00
GR	1373.40	4957.00	1373.30	4958.00	1373.10	4966.00	1373.30	4968.00	1371.90	4973.00
GR	1371.80	4976.00	1372.20	4978.00	1371.80	4982.00	1371.70	4984.00	1372.10	4988.00
GR	1372.40	4992.00	1372.40	4994.00	1371.50	4994.00	1371.50	5005.00	1371.50	5006.00
GR	1371.90	5009.00	1372.60	5017.00	1372.60	5018.00	1373.10	5025.00	1373.10	5027.00
GR	1372.70	5029.00	1373.80	5030.00	1375.50	5034.00	1376.20	5036.00	1378.40	5040.00
GR	1380.30	5046.00	1381.50	5054.00	1381.60	5055.00	1382.10	5062.00	1382.20	5065.00
GR	1382.40	5070.00	1382.20	5075.00	1382.10	5078.00	1382.80	5085.00	1382.90	5086.00
GR	1383.00	5088.00	1383.40	5093.00	1383.40	5095.00	1383.50	5099.00	1383.80	5100.00
GR	1385.10	5102.00	1385.80	5105.00	1387.20	5109.00	1391.30	5115.00	1392.00	5116.00
GR	1395.00	5120.00	1398.40	5124.00	1399.80	5125.00	1405.00	5131.00	1406.30	5133.00
X1	13392.00	264.00	4935.00	5033.00	27.00	35.00	35.00	0.00	0.00	0.00
X3										1.00
GR	1396.80	4046.00	1396.00	4048.00	1393.80	4053.00	1393.20	4054.00	1392.40	4056.00
GR	1392.80	4057.00	1392.20	4061.00	1391.10	4065.00	1391.20	4067.00	1391.00	4071.00
GR	1390.60	4074.00	1390.30	4078.00	1389.70	4081.00	1389.40	4082.00	1388.70	4085.00
GR	1388.70	4088.00	1388.20	4093.00	1388.10	4094.00	1388.00	4095.00	1387.60	4098.00
GR	1387.40	4102.00	1387.40	4104.00	1386.80	4111.00	1386.70	4112.00	1386.50	4114.00
GR	1386.60	4119.00	1386.60	4120.00	1386.60	4121.00	1386.10	4127.00	1386.10	4128.00
GR	1385.80	4130.00	1385.80	4131.00	1385.70	4132.00	1385.70	4135.00	1385.30	4139.00
GR	1385.00	4147.00	1384.80	4148.00	1384.70	4151.00	1384.60	4153.00	1384.70	4154.00
GR	1384.70	4156.00	1384.70	4157.00	1384.80	4159.00	1384.70	4160.00	1384.70	4163.00
GR	1384.80	4164.00	1384.60	4167.00	1384.60	4168.00	1384.60	4170.00	1384.70	4172.00
GR	1384.80	4173.00	1384.80	4175.00	1384.70	4177.00	1384.70	4178.00	1384.70	4180.00
GR	1384.80	4182.00	1385.00	4185.00	1385.00	4186.00	1385.10	4188.00	1385.00	4189.00
GR	1385.00	4191.00	1384.90	4192.00	1384.80	4194.00	1384.90	4196.00	1384.90	4198.00
GR	1384.90	4199.00	1384.80	4200.00	1384.90	4201.00	1384.80	4203.00	1384.50	4208.00
GR	1384.50	4209.00	1384.30	4210.00	1384.30	4212.00	1384.40	4215.00	1384.40	4217.00
GR	1384.00	4219.00	1384.00	4221.00	1384.10	4223.00	1384.00	4224.00	1384.10	4226.00
GR	1383.80	4229.00	1383.40	4233.00	1383.30	4235.00	1382.70	4243.00	1382.60	4244.00
GR	1382.20	4250.00	1382.10	4253.00	1381.90	4258.00	1381.90	4264.00	1381.90	4266.00
GR	1381.70	4271.00	1381.60	4274.00	1381.60	4282.00	1381.60	4285.00	1381.30	4290.00
GR	1381.20	4296.00	1381.10	4299.00	1381.10	4307.00	1381.00	4310.00	1380.80	4316.00
GR	1380.70	4319.00	1380.50	4325.00	1380.40	4331.00	1380.40	4334.00	1380.10	4340.00
GR	1380.00	4342.00	1380.00	4343.00	1379.80	4351.00	1379.70	4354.00	1379.60	4359.00
GR	1379.10	4364.00	1378.80	4367.00	1378.40	4378.00	1378.50	4382.00	1378.40	4384.00
GR	1378.50	4387.00	1378.60	4393.00	1378.20	4401.00	1378.20	4402.00	1378.10	4410.00
GR	1378.10	4411.00	1377.90	4418.00	1377.80	4421.00	1377.80	4426.00	1377.80	4431.00
GR	1377.80	4434.00	1377.70	4441.00	1377.70	4442.00	1377.70	4443.00	1377.70	4451.00
GR	1377.80	4457.00	1377.80	4462.00	1377.80	4465.00	1377.60	4472.00	1377.60	4473.00
GR	1377.70	4475.00	1377.80	4481.00	1377.90	4483.00	1377.70	4491.00	1377.30	4496.00
GR	1377.00	4500.00	1377.40	4508.00	1377.40	4509.00	1377.40	4513.00	1377.40	4517.00
GR	1377.30	4519.00	1377.00	4525.00	1377.00	4529.00	1377.10	4533.00	1377.80	4540.00
GR	1377.80	4542.00	1378.00	4549.00	1378.00	4552.00	1377.90	4558.00	1378.10	4564.00
GR	1378.20	4567.00	1378.10	4575.00	1378.10	4576.00	1378.10	4577.00	1378.10	4585.00
GR	1378.00	4587.00	1377.80	4593.00	1377.80	4602.00	1377.80	4611.00	1377.80	4612.00
GR	1377.70	4620.00	1377.70	4622.00	1377.80	4628.00	1377.70	4632.00	1377.60	4636.00
GR	1377.80	4643.00	1377.90	4645.00	1377.90	4651.00	1377.90	4653.00	1377.90	4660.00
GR	1378.00	4663.00	1378.00	4663.00	1378.30	4669.00	1378.60	4672.00	1378.50	4674.00
GR	1378.20	4681.00	1378.20	4682.00	1378.40	4690.00	1378.40	4693.00	1378.10	4698.00
GR	1378.20	4704.00	1378.20	4707.00	1378.20	4715.00	1378.20	4718.00	1378.10	4724.00
GR	1378.10	4727.00	1378.00	4733.00	1378.00	4740.00	1378.00	4742.00	1378.00	4750.00
GR	1378.00	4751.00	1378.00	4752.00	1378.10	4759.00	1378.10	4761.00	1378.10	4767.00
GR	1378.00	4771.00	1377.80	4774.00	1378.20	4780.00	1378.20	4782.00	1377.40	4787.00
GR	1377.20	4789.00	1377.20	4790.00	1377.60	4805.00	1377.50	4810.00	1377.40	4817.00
GR	1377.30	4831.00	1377.20	4832.00	1376.70	4834.00	1376.20	4840.00	1376.50	4846.00
GR	1376.60	4848.00	1376.80	4855.00	1376.90	4857.00	1377.00	4858.00	1377.30	4867.00
GR	1377.00	4871.00	1376.80	4876.00	1376.80	4879.00	1376.90	4883.00	1377.20	4890.00
GR	1377.10	4896.00	1376.80	4903.00	1376.60	4905.00	1376.60	4910.00	1376.60	4916.00
GR	1376.50	4918.00	1376.10	4935.00	1375.30	4941.00	1374.80	4947.00	1372.50	4959.00
GR	1372.10	4962.00	1371.80	4965.00	1372.20	4971.00	1372.10	4974.00	1372.00	4979.00
GR	1372.20	4984.00	1372.20	4986.00	1372.30	4993.00	1371.80	4993.00	1371.80	5006.00
GR	1372.20	5006.00	1372.10	5009.00	1372.20	5014.00	1372.70	5020.00	1375.60	5025.00
GR	1378.80	5033.00	1379.50	5040.00	1380.00	5044.00	1379.90	5050.00	1379.80	5053.00
GR	1381.00	5062.00	1383.70	5071.00	1384.30	5073.00	1384.90	5074.00	1386.10	5081.00

GR	1387.30	5085.00	1389.60	5089.00	1397.45	5099.50	1405.30	5110.00	1407.10	5112.00
X1	13427.00	274.00	4987.00	5025.00	54.00	27.00	35.00	0.00	0.00	0.00
GR	1401.70	4003.00	1401.30	4005.00	1400.60	4006.00	1400.60	4007.00	1399.40	4010.00
GR	1398.80	4012.00	1398.30	4013.00	1398.00	4015.00	1397.80	4016.00	1396.90	4019.00
GR	1396.60	4020.00	1396.00	4022.00	1395.30	4024.00	1394.70	4027.00	1392.20	4034.00
GR	1392.10	4036.00	1392.40	4038.00	1392.00	4044.00	1391.90	4047.00	1391.90	4048.00
GR	1391.60	4049.00	1391.50	4050.00	1390.50	4057.00	1390.40	4060.00	1389.80	4062.00
GR	1389.30	4064.00	1389.60	4066.00	1390.10	4070.00	1389.90	4073.00	1389.10	4078.00
GR	1388.70	4080.00	1388.60	4082.00	1388.00	4084.00	1387.50	4087.00	1387.80	4088.00
GR	1387.60	4092.00	1387.50	4094.00	1387.50	4095.00	1387.40	4098.00	1387.20	4100.00
GR	1387.10	4101.00	1386.80	4102.00	1386.60	4104.00	1386.60	4107.00	1386.30	4109.00
GR	1386.20	4110.00	1386.10	4112.00	1386.00	4114.00	1385.80	4116.00	1385.80	4117.00
GR	1385.60	4121.00	1385.40	4124.00	1385.40	4125.00	1385.10	4130.00	1385.30	4134.00
GR	1385.40	4135.00	1385.20	4136.00	1385.20	4137.00	1385.20	4138.00	1385.20	4139.00
GR	1385.00	4140.00	1385.10	4141.00	1385.10	4144.00	1385.10	4145.00	1385.00	4147.00
GR	1385.10	4148.00	1385.10	4149.00	1385.10	4151.00	1385.60	4154.00	1385.20	4159.00
GR	1384.60	4165.00	1384.60	4166.00	1384.40	4173.00	1384.20	4180.00	1383.40	4188.00
GR	1383.40	4189.00	1383.30	4190.00	1383.30	4191.00	1383.10	4194.00	1383.20	4198.00
GR	1383.50	4207.00	1383.60	4210.00	1383.50	4214.00	1383.60	4223.00	1382.90	4228.00
GR	1382.70	4231.00	1382.30	4237.00	1382.10	4239.00	1382.10	4247.00	1382.10	4248.00
GR	1382.10	4255.00	1382.10	4256.00	1382.00	4263.00	1382.00	4265.00	1381.60	4271.00
GR	1381.50	4274.00	1381.30	4279.00	1381.10	4283.00	1381.00	4287.00	1380.90	4292.00
GR	1380.90	4294.00	1380.80	4301.00	1380.70	4302.00	1380.60	4306.00	1380.50	4310.00
GR	1380.50	4311.00	1380.20	4319.00	1380.10	4320.00	1379.70	4327.00	1379.60	4329.00
GR	1379.40	4335.00	1379.30	4339.00	1379.10	4348.00	1378.90	4352.00	1378.90	4358.00
GR	1379.00	4361.00	1379.00	4367.00	1379.00	4369.00	1378.80	4377.00	1378.80	4378.00
GR	1378.80	4382.00	1378.80	4386.00	1378.80	4394.00	1378.80	4396.00	1378.70	4402.00
GR	1378.60	4406.00	1378.50	4411.00	1378.30	4415.00	1378.30	4419.00	1378.60	4425.00
GR	1378.60	4427.00	1378.60	4434.00	1378.60	4435.00	1378.70	4444.00	1378.80	4452.00
GR	1378.90	4453.00	1378.60	4460.00	1378.50	4462.00	1378.10	4468.00	1377.90	4471.00
GR	1377.80	4476.00	1378.00	4481.00	1378.10	4484.00	1378.20	4490.00	1378.20	4492.00
GR	1378.00	4499.00	1377.80	4508.00	1377.80	4509.00	1378.00	4512.00	1378.40	4517.00
GR	1378.40	4518.00	1378.50	4525.00	1378.50	4528.00	1378.50	4534.00	1378.60	4538.00
GR	1378.60	4542.00	1378.60	4547.00	1378.80	4551.00	1379.80	4557.00	1379.70	4559.00
GR	1378.80	4564.00	1378.40	4572.00	1378.50	4576.00	1378.50	4578.00	1378.40	4583.00
GR	1378.50	4586.00	1377.60	4593.00	1377.50	4595.00	1378.00	4600.00	1378.40	4604.00
GR	1378.20	4606.00	1378.00	4622.00	1378.40	4625.00	1378.40	4629.00	1378.40	4631.00
GR	1378.40	4639.00	1378.30	4640.00	1378.20	4644.00	1378.10	4649.00	1378.00	4658.00
GR	1377.90	4660.00	1377.90	4667.00	1377.90	4670.00	1377.80	4676.00	1377.90	4681.00
GR	1378.10	4685.00	1378.10	4702.00	1378.10	4703.00	1377.90	4711.00	1377.90	4712.00
GR	1377.70	4721.00	1377.70	4722.00	1377.90	4730.00	1377.90	4733.00	1377.70	4738.00
GR	1377.70	4742.00	1377.80	4747.00	1377.80	4751.00	1377.80	4760.00	1377.80	4762.00
GR	1377.80	4764.00	1377.80	4765.00	1378.20	4772.00	1378.20	4773.00	1377.90	4782.00
GR	1377.90	4783.00	1377.90	4792.00	1377.90	4801.00	1377.90	4805.00	1377.80	4810.00
GR	1377.90	4816.00	1377.90	4819.00	1377.60	4827.00	1377.60	4829.00	1377.40	4838.00
GR	1377.40	4847.00	1377.40	4848.00	1377.60	4855.00	1377.60	4857.00	1377.60	4864.00
GR	1377.50	4867.00	1377.40	4872.00	1377.50	4877.00	1377.60	4881.00	1377.80	4886.00
GR	1377.80	4889.00	1377.80	4896.00	1377.80	4898.00	1377.90	4900.00	1378.00	4901.00
GR	1377.90	4904.00	1377.80	4911.00	1378.00	4916.00	1378.30	4919.00	1378.40	4923.00
GR	1378.80	4925.00	1378.80	4927.00	1377.10	4931.00	1376.60	4936.00	1375.20	4949.00
GR	1374.80	4950.00	1374.30	4951.00	1373.80	4957.00	1373.60	4961.00	1373.60	4963.00
GR	1373.90	4964.00	1374.20	4969.00	1374.60	4972.00	1375.20	4978.00	1375.20	4981.00
GR	1375.00	4985.00	1375.00	4987.00	1374.10	4993.00	1373.20	4997.00	1371.40	5000.00
GR	1371.40	5009.00	1371.50	5010.00	1373.00	5013.00	1372.90	5014.00	1373.10	5015.00
GR	1374.60	5017.00	1379.10	5025.00	1379.40	5027.00	1380.10	5031.00	1379.90	5035.00
GR	1380.40	5040.00	1381.70	5045.00	1381.80	5054.00	1384.90	5059.00	1386.00	5066.00
GR	1386.80	5069.00	1387.30	5071.00	1389.10	5074.00	1397.20	5086.00		
X1	13781.00	296.00	4994.00	5010.00	214.00	367.00	354.00	0.00	0.00	0.00
GR	1401.20	3906.00	1400.90	3908.00	1399.40	3911.00	1399.00	3919.00	1398.80	3920.00
GR	1398.60	3921.00	1397.90	3924.00	1397.90	3926.00	1396.80	3935.00	1396.20	3938.00
GR	1395.20	3942.00	1395.20	3943.00	1394.90	3944.00	1393.70	3956.00	1393.60	3957.00
GR	1393.50	3958.00	1392.60	3962.00	1391.00	3969.00	1390.00	3977.00	1390.90	3981.00
GR	1391.30	3984.00	1390.00	3990.00	1390.40	3993.00	1390.60	3995.00	1390.60	3998.00
GR	1390.70	4000.00	1390.70	4001.00	1390.90	4002.00	1391.20	4005.00	1391.10	4006.00
GR	1390.90	4008.00	1390.80	4009.00	1390.70	4010.00	1390.80	4013.00	1390.80	4015.00
GR	1390.80	4016.00	1390.80	4017.00	1390.80	4019.00	1390.80	4021.00	1390.90	4024.00
GR	1390.90	4025.00	1390.90	4027.00	1390.80	4028.00	1390.70	4033.00	1390.50	4034.00
GR	1390.40	4036.00	1390.40	4038.00	1390.20	4040.00	1390.20	4042.00	1390.20	4043.00
GR	1390.10	4044.00	1390.00	4045.00	1390.10	4047.00	1390.00	4047.00	1389.90	4050.00
GR	1389.90	4051.00	1389.80	4053.00	1389.70	4054.00	1389.80	4056.00	1389.80	4057.00
GR	1389.90	4058.00	1389.70	4061.00	1389.60	4063.00	1389.40	4068.00	1389.40	4070.00

GR	1389.30	4071.00	1389.20	4072.00	1389.30	4073.00	1389.20	4078.00	1389.20	4079.00
GR	1389.20	4080.00	1389.20	4082.00	1389.10	4084.00	1389.00	4087.00	1389.10	4088.00
GR	1388.90	4089.00	1388.80	4091.00	1388.80	4093.00	1388.80	4095.00	1388.80	4097.00
GR	1388.70	4100.00	1388.60	4101.00	1388.50	4102.00	1388.20	4106.00	1388.10	4107.00
GR	1387.70	4114.00	1387.70	4117.00	1387.70	4123.00	1387.70	4126.00	1387.80	4131.00
GR	1388.00	4136.00	1388.10	4140.00	1388.00	4145.00	1387.90	4148.00	1387.40	4155.00
GR	1387.30	4157.00	1386.80	4164.00	1386.80	4165.00	1386.90	4173.00	1386.90	4174.00
GR	1386.80	4181.00	1386.70	4183.00	1386.40	4189.00	1386.20	4192.00	1386.10	4196.00
GR	1386.20	4201.00	1386.20	4204.00	1385.90	4210.00	1385.90	4212.00	1385.80	4219.00
GR	1385.80	4221.00	1385.50	4228.00	1385.30	4236.00	1385.30	4238.00	1385.10	4245.00
GR	1385.00	4248.00	1384.70	4254.00	1384.50	4258.00	1384.40	4263.00	1384.10	4271.00
GR	1383.70	4278.00	1383.60	4280.00	1383.20	4288.00	1383.00	4289.00	1382.80	4298.00
GR	1382.60	4306.00	1382.60	4307.00	1382.60	4314.00	1382.50	4316.00	1382.30	4322.00
GR	1382.20	4325.00	1382.30	4330.00	1382.40	4334.00	1382.50	4338.00	1382.40	4344.00
GR	1382.30	4346.00	1382.40	4353.00	1382.40	4354.00	1382.40	4360.00	1382.40	4362.00
GR	1382.20	4370.00	1382.20	4372.00	1381.90	4379.00	1381.80	4381.00	1381.60	4387.00
GR	1381.60	4390.00	1381.40	4396.00	1381.40	4399.00	1381.40	4404.00	1381.30	4409.00
GR	1381.30	4412.00	1381.40	4418.00	1381.10	4421.00	1380.40	4427.00	1380.40	4429.00
GR	1380.30	4437.00	1380.40	4442.00	1380.50	4446.00	1380.70	4454.00	1380.60	4456.00
GR	1380.60	4463.00	1380.70	4466.00	1380.60	4471.00	1380.20	4476.00	1380.20	4479.00
GR	1380.60	4485.00	1380.80	4488.00	1381.10	4495.00	1381.10	4496.00	1381.20	4499.00
GR	1380.80	4511.00	1380.80	4515.00	1380.80	4517.00	1380.00	4528.00	1380.00	4530.00
GR	1380.00	4533.00	1380.60	4539.00	1380.60	4543.00	1380.70	4547.00	1380.60	4553.00
GR	1380.70	4556.00	1380.70	4562.00	1380.70	4564.00	1380.70	4572.00	1380.70	4573.00
GR	1380.90	4582.00	1380.90	4590.00	1380.90	4592.00	1380.90	4599.00	1380.90	4601.00
GR	1381.20	4608.00	1381.20	4610.00	1381.50	4618.00	1381.50	4619.00	1381.00	4628.00
GR	1380.80	4632.00	1380.80	4633.00	1381.00	4634.00	1381.50	4638.00	1379.90	4645.00
GR	1379.90	4647.00	1380.50	4652.00	1381.50	4657.00	1381.30	4661.00	1381.30	4662.00
GR	1380.90	4670.00	1380.80	4672.00	1380.70	4679.00	1380.80	4681.00	1381.10	4688.00
GR	1381.40	4692.00	1381.60	4697.00	1381.10	4703.00	1381.10	4706.00	1381.20	4713.00
GR	1381.20	4715.00	1380.80	4723.00	1380.80	4724.00	1380.40	4733.00	1380.30	4748.00
GR	1380.30	4753.00	1380.40	4758.00	1380.40	4768.00	1380.50	4770.00	1380.40	4774.00
GR	1380.40	4780.00	1380.40	4784.00	1380.30	4791.00	1380.30	4797.00	1380.20	4801.00
GR	1380.30	4807.00	1380.10	4816.00	1380.10	4817.00	1380.00	4825.00	1380.00	4827.00
GR	1380.10	4834.00	1380.20	4838.00	1379.90	4843.00	1380.00	4848.00	1380.10	4851.00
GR	1380.00	4858.00	1380.00	4860.00	1380.10	4868.00	1380.10	4869.00	1380.20	4878.00
GR	1380.00	4886.00	1380.00	4888.00	1380.10	4894.00	1380.10	4897.00	1380.10	4901.00
GR	1380.50	4907.00	1380.50	4908.00	1380.40	4910.00	1380.40	4915.00	1380.10	4919.00
GR	1380.20	4923.00	1380.30	4930.00	1380.30	4931.00	1380.40	4938.00	1380.50	4945.00
GR	1380.70	4951.00	1380.70	4953.00	1381.40	4959.00	1382.40	4964.00	1383.30	4971.00
GR	1383.00	4972.00	1381.10	4979.00	1379.90	4982.00	1379.30	4987.00	1377.90	4994.00
GR	1375.20	4998.00	1375.20	5005.00	1377.70	5009.00	1377.90	5010.00	1378.50	5016.00
GR	1379.70	5024.00	1379.70	5025.00	1379.00	5027.00	1379.50	5031.00	1381.10	5042.00
GR	1381.20	5043.00	1382.20	5049.00	1382.70	5056.00	1382.90	5062.00	1382.90	5064.00
GR	1382.70	5070.00	1382.70	5072.00	1382.90	5079.00	1382.90	5080.00	1383.00	5081.00
GR	1384.30	5089.00	1385.20	5090.00	1384.80	5098.00	1387.80	5100.00	1396.40	5103.00
GR	1401.40	5107.00								
X1	14059.00	164.00	4993.00	5021.00	274.00	279.00	278.00	0.00	0.00	0.00
GR	1387.80	4522.00	1387.80	4523.00	1387.90	4525.00	1387.90	4529.00	1387.90	4530.00
GR	1387.80	4538.00	1387.80	4540.00	1387.60	4544.00	1387.00	4552.00	1387.00	4553.00
GR	1386.80	4554.00	1386.00	4557.00	1385.00	4562.00	1384.60	4564.00	1383.10	4571.00
GR	1382.60	4578.00	1382.40	4580.00	1382.30	4586.00	1382.30	4589.00	1382.30	4591.00
GR	1382.40	4597.00	1382.20	4602.00	1382.30	4605.00	1383.40	4611.00	1383.70	4613.00
GR	1383.80	4614.00	1383.70	4619.00	1383.00	4624.00	1383.60	4630.00	1383.70	4631.00
GR	1383.70	4640.00	1383.70	4641.00	1383.20	4649.00	1383.30	4655.00	1383.40	4659.00
GR	1383.30	4663.00	1383.30	4667.00	1383.30	4669.00	1383.50	4676.00	1383.60	4681.00
GR	1383.60	4684.00	1383.60	4690.00	1383.50	4692.00	1383.50	4699.00	1383.60	4702.00
GR	1383.60	4706.00	1383.60	4712.00	1383.60	4713.00	1383.70	4716.00	1383.80	4721.00
GR	1383.80	4723.00	1383.70	4729.00	1383.80	4734.00	1383.80	4737.00	1383.90	4744.00
GR	1384.00	4752.00	1384.10	4755.00	1384.10	4760.00	1384.00	4766.00	1384.00	4767.00
GR	1384.00	4775.00	1383.90	4782.00	1384.20	4786.00	1384.40	4789.00	1384.20	4794.00
GR	1384.30	4800.00	1384.60	4804.00	1384.30	4809.00	1384.30	4814.00	1384.00	4821.00
GR	1384.00	4823.00	1384.00	4824.00	1384.20	4831.00	1384.30	4836.00	1384.40	4840.00
GR	1384.30	4848.00	1384.10	4855.00	1384.00	4858.00	1384.50	4862.00	1385.40	4866.00
GR	1384.90	4870.00	1385.60	4877.00	1385.60	4878.00	1384.10	4887.00	1384.60	4894.00
GR	1384.60	4896.00	1384.60	4901.00	1384.10	4906.00	1384.20	4910.00	1384.20	4912.00
GR	1384.20	4915.00	1384.10	4920.00	1384.10	4921.00	1384.30	4927.00	1384.30	4931.00
GR	1384.30	4935.00	1385.70	4939.00	1385.60	4940.00	1384.80	4946.00	1385.10	4947.00
GR	1385.80	4949.00	1386.40	4954.00	1387.00	4957.00	1387.00	4958.00	1387.30	4966.00
GR	1386.60	4969.00	1386.50	4970.00	1386.50	4971.00	1386.10	4976.00	1383.20	4983.00
GR	1382.90	4984.00	1382.90	4985.00	1382.90	4993.00	1381.40	4996.00	1379.80	4998.00

GR	1378.10	5000.00	1378.10	5007.00	1378.30	5008.00	1379.80	5011.00	1380.70	5013.00
GR	1382.70	5021.00	1382.20	5025.00	1383.50	5030.00	1384.00	5035.00	1384.20	5039.00
GR	1384.30	5047.00	1384.40	5048.00	1384.50	5049.00	1385.70	5055.00	1385.70	5060.00
GR	1385.40	5062.00	1385.40	5066.00	1385.50	5069.00	1385.50	5072.00	1385.60	5077.00
GR	1385.80	5083.00	1385.80	5084.00	1385.80	5085.00	1385.70	5091.00	1385.80	5097.00
GR	1385.90	5104.00	1385.90	5112.00	1386.00	5116.00	1386.10	5119.00	1386.10	5128.00
GR	1386.10	5130.00	1386.10	5136.00	1385.90	5142.00	1385.90	5145.00	1386.20	5154.00
GR	1386.30	5163.00	1387.20	5173.00	1387.50	5175.00	1387.50	5178.00	1387.60	5182.00
GR	1390.10	5186.00	1391.00	5187.00	1393.40	5193.00	1395.90	5198.00	1396.80	5200.00
GR	1399.40	5205.00	1400.60	5207.00	1401.50	5208.00	1402.70	5210.00		
X1	14339.00	191.00	4980.00	5046.00	276.00	284.00	280.00	0.00	0.00	0.00
X3										3.00
GR	1402.40	4635.00	1402.90	4640.00	1403.00	4642.00	1403.10	4645.00	1402.60	4648.00
GR	1401.40	4654.00	1400.80	4655.00	1399.80	4656.00	1395.50	4662.00	1392.60	4666.00
GR	1391.40	4667.00	1390.80	4669.00	1387.80	4671.00	1386.10	4672.00	1386.40	4673.00
GR	1386.40	4679.00	1386.10	4680.00	1386.20	4682.00	1386.20	4685.00	1386.10	4686.00
GR	1386.10	4691.00	1386.10	4694.00	1386.10	4700.00	1386.00	4702.00	1386.10	4704.00
GR	1386.40	4711.00	1386.40	4713.00	1386.40	4720.00	1386.50	4721.00	1386.50	4725.00
GR	1386.50	4727.00	1386.50	4729.00	1386.70	4733.00	1386.70	4735.00	1386.70	4736.00
GR	1386.60	4737.00	1386.70	4739.00	1386.80	4743.00	1386.80	4745.00	1386.80	4746.00
GR	1386.80	4748.00	1386.70	4751.00	1386.70	4752.00	1386.40	4755.00	1386.00	4759.00
GR	1386.00	4760.00	1385.80	4764.00	1385.70	4766.00	1385.70	4771.00	1385.60	4772.00
GR	1385.60	4773.00	1385.90	4779.00	1386.00	4782.00	1386.10	4784.00	1386.20	4785.00
GR	1386.50	4791.00	1386.50	4792.00	1386.60	4799.00	1386.90	4806.00	1386.90	4810.00
GR	1387.00	4816.00	1387.10	4819.00	1387.60	4826.00	1387.40	4830.00	1387.20	4834.00
GR	1387.30	4840.00	1387.50	4843.00	1387.50	4845.00	1387.50	4850.00	1387.50	4854.00
GR	1387.50	4856.00	1387.60	4870.00	1387.60	4885.00	1387.60	4900.00	1387.60	4902.00
GR	1387.60	4906.00	1387.60	4908.00	1387.60	4911.00	1387.60	4915.00	1387.60	4916.00
GR	1387.60	4918.00	1387.50	4925.00	1387.50	4926.00	1387.60	4935.00	1388.00	4954.00
GR	1388.00	4955.00	1388.00	4957.00	1388.00	4959.00	1388.00	4963.00	1388.20	4965.00
GR	1388.90	4969.00	1389.10	4971.00	1389.30	4976.00	1389.30	4979.00	1389.20	4980.00
GR	1385.00	4988.00	1384.20	4989.00	1383.30	4989.00	1383.30	4995.00	1385.10	4995.00
GR	1385.60	5000.00	1385.40	5001.00	1384.80	5008.00	1384.40	5010.00	1384.10	5017.00
GR	1384.20	5019.00	1383.30	5024.00	1383.60	5028.00	1383.60	5033.00	1383.70	5034.00
GR	1383.70	5036.00	1384.30	5037.00	1385.30	5040.00	1386.90	5042.00	1388.80	5046.00
GR	1388.40	5058.00	1388.40	5059.00	1388.00	5063.00	1388.10	5064.00	1388.10	5065.00
GR	1388.10	5071.00	1388.10	5075.00	1388.10	5077.00	1388.10	5081.00	1388.00	5084.00
GR	1388.00	5090.00	1388.00	5092.00	1388.10	5093.00	1388.20	5101.00	1388.20	5108.00
GR	1388.20	5110.00	1388.10	5114.00	1388.10	5119.00	1388.20	5123.00	1388.40	5127.00
GR	1388.40	5131.00	1388.50	5134.00	1388.30	5138.00	1388.30	5141.00	1388.30	5145.00
GR	1388.30	5149.00	1388.30	5153.00	1388.40	5158.00	1388.30	5166.00	1388.30	5167.00
GR	1388.30	5168.00	1388.80	5174.00	1388.70	5180.00	1388.70	5182.00	1388.90	5183.00
GR	1389.30	5190.00	1389.30	5208.00	1389.30	5209.00	1389.40	5222.33	1389.50	5235.67
GR	1389.60	5249.00	1389.50	5253.00	1389.60	5254.00	1389.40	5261.00	1389.60	5262.00
GR	1389.80	5274.00	1389.70	5275.00	1390.50	5280.00	1391.10	5295.00	1390.70	5301.00
GR	1390.10	5313.00	1390.50	5315.00	1390.50	5317.00	1390.50	5324.00	1390.70	5331.00
GR	1390.80	5333.00	1390.70	5337.00	1390.70	5342.00	1391.00	5349.00	1391.10	5357.00
GR	1391.40	5363.00	1392.00	5368.00	1392.20	5370.00	1392.60	5372.00	1393.10	5376.00
GR	1393.60	5378.00	1394.00	5382.00	1395.00	5388.00	1395.10	5389.00	1395.70	5397.00
GR	1395.80	5399.00	1396.20	5403.00	1396.70	5407.00	1395.80	5411.00	1396.70	5412.00
GR	1399.80	5418.00	1402.30	5422.00	1402.80	5423.00	1404.60	5430.00		
X1	14524.00	217.00	4985.00	5049.00	217.00	183.00	185.00	0.00	0.00	0.00
GR	1414.20	4640.00	1414.30	4642.00	1414.30	4643.00	1414.40	4645.00	1414.70	4650.00
GR	1414.90	4654.00	1414.90	4656.00	1415.10	4659.00	1415.30	4663.00	1415.20	4669.00
GR	1415.20	4671.00	1415.20	4674.00	1415.30	4680.00	1415.30	4683.00	1415.30	4689.00
GR	1415.30	4690.00	1414.80	4700.00	1414.50	4705.00	1413.80	4706.00	1406.40	4719.00
GR	1405.10	4721.00	1401.10	4728.00	1398.90	4734.00	1397.90	4736.00	1397.10	4737.00
GR	1391.40	4745.00	1391.10	4749.00	1391.00	4750.00	1390.90	4757.00	1390.90	4759.00
GR	1390.90	4760.00	1391.00	4767.00	1390.90	4776.00	1390.80	4783.00	1390.80	4785.00
GR	1390.90	4786.00	1390.90	4790.00	1390.90	4793.00	1390.90	4796.00	1390.90	4798.00
GR	1391.00	4803.00	1390.80	4807.00	1390.70	4809.00	1390.70	4811.00	1390.80	4815.00
GR	1390.70	4819.00	1390.70	4821.00	1390.70	4823.00	1390.60	4831.00	1390.60	4834.00
GR	1390.40	4841.00	1390.40	4842.00	1390.20	4850.00	1390.10	4855.00	1390.00	4859.00
GR	1390.00	4866.00	1389.70	4875.00	1389.60	4880.00	1389.50	4884.00	1389.60	4890.00
GR	1389.60	4892.00	1389.50	4896.00	1389.40	4900.00	1389.40	4902.00	1389.40	4906.00
GR	1389.30	4910.00	1389.30	4912.00	1389.40	4914.00	1389.40	4917.00	1389.50	4918.00
GR	1389.50	4923.00	1389.40	4924.00	1389.40	4926.00	1389.40	4932.00	1389.30	4936.00
GR	1389.20	4940.00	1389.30	4942.00	1389.10	4950.00	1389.50	4952.00	1391.80	4959.00
GR	1391.90	4961.00	1392.10	4964.00	1392.40	4967.00	1392.40	4968.00	1392.40	4969.00
GR	1390.50	4974.00	1389.70	4976.00	1388.80	4980.00	1389.30	4983.00	1389.60	4985.00
GR	1388.10	4991.00	1387.80	4992.00	1388.10	5000.00	1388.40	5005.00	1388.30	5007.00

```
GR  1388.10  5012.00  1387.30  5018.00  1387.00  5020.00  1386.40  5022.00  1386.40  5031.00
GR  1387.70  5036.00  1388.50  5039.00  1389.20  5045.00  1389.60  5049.00  1389.70  5050.00
GR  1389.60  5055.00  1389.30  5059.00  1389.40  5060.00  1390.10  5061.00  1391.30  5070.00
GR  1389.40  5081.00  1389.30  5088.00  1389.40  5091.00  1389.60  5095.00  1390.00  5101.00
GR  1390.00  5101.00  1390.00  5102.00  1390.50  5109.00  1390.70  5112.00  1390.80  5116.00
GR  1390.70  5122.00  1390.70  5124.00  1390.80  5127.00  1390.80  5131.00  1390.90  5133.00
GR  1390.90  5139.00  1390.90  5144.00  1390.80  5147.00  1390.90  5153.00  1390.90  5154.00
GR  1390.90  5155.00  1390.90  5161.00  1391.00  5165.00  1391.00  5168.00  1391.20  5174.00
GR  1391.20  5175.00  1391.30  5183.00  1391.30  5186.00  1391.40  5192.00  1391.40  5199.00
GR  1391.40  5200.00  1391.40  5203.00  1391.40  5209.00  1391.50  5213.00  1391.60  5218.00
GR  1391.60  5227.00  1391.60  5228.00  1391.40  5237.00  1391.40  5240.00  1391.30  5245.00
GR  1391.30  5252.00  1391.30  5254.00  1391.30  5259.00  1391.30  5263.00  1391.10  5267.00
GR  1390.90  5277.00  1391.20  5288.00  1391.50  5295.00  1391.60  5296.00  1391.70  5299.00
GR  1392.20  5317.00  1392.00  5320.00  1392.70  5325.00  1392.80  5327.00  1393.10  5329.00
GR  1393.90  5336.00  1394.00  5340.00  1394.30  5348.00  1394.30  5350.00  1394.30  5355.00
GR  1394.30  5361.00  1394.40  5363.00  1394.30  5371.00  1394.30  5372.00  1394.20  5378.00
GR  1394.30  5382.00  1394.40  5386.00  1394.60  5393.00  1394.60  5394.00  1394.60  5395.00
GR  1394.70  5401.00  1394.70  5404.00  1394.80  5409.00  1394.90  5415.00  1395.20  5425.00
GR  1395.20  5426.00  1396.30  5434.00  1396.10  5441.00  1396.20  5444.00  1396.30  5446.00
GR  1397.10  5452.00  1396.70  5456.00  1396.70  5462.00  1398.00  5470.00  1398.00  5470.00
GR  1398.60  5474.00  1399.50  5479.00  1400.00  5481.00  1401.10  5487.00  1401.70  5493.00
GR  1402.00  5495.00  1401.90  5496.00  1401.80  5500.00  1401.70  5501.00  1401.70  5505.00
GR  1402.70  5508.00  1405.80  5512.00  1407.00  5514.00  1408.40  5518.00  1412.00  5524.00
GR  1412.30  5524.00  1413.50  5527.00  1416.50  5534.00  1419.60  5540.00  1419.80  5541.00
GR  1420.30  5544.00  1420.20  5546.00
X1 14687.00   184.00  4988.00  5051.00   165.00   162.00   163.00     0.00     0.00     0.00
X3                                                                                      3.00
GR  1414.50  4756.00  1414.20  4757.00  1410.50  4762.00  1406.30  4769.00  1405.90  4770.00
GR  1403.00  4775.00  1401.00  4779.00  1400.40  4785.00  1400.20  4787.00  1400.00  4792.00
GR  1400.00  4793.00  1399.70  4799.00  1399.70  4802.00  1399.60  4805.00  1399.60  4808.00
GR  1399.50  4811.00  1399.40  4814.00  1399.40  4817.00  1399.30  4822.00  1399.30  4823.00
GR  1399.20  4824.00  1398.90  4830.00  1398.80  4836.00  1398.70  4837.00  1398.70  4838.00
GR  1398.70  4843.00  1398.60  4846.00  1398.50  4850.00  1398.30  4857.00  1398.20  4859.00
GR  1398.20  4866.00  1398.10  4868.00  1398.10  4872.00  1397.90  4876.00  1397.90  4878.00
GR  1397.90  4882.00  1398.00  4888.00  1397.80  4895.00  1397.90  4901.00  1397.80  4902.00
GR  1397.40  4907.00  1396.10  4910.00  1395.20  4913.00  1394.10  4915.00  1393.00  4922.00
GR  1392.80  4925.00  1392.50  4927.00  1391.20  4933.00  1390.20  4939.00  1390.20  4941.00
GR  1390.90  4951.00  1391.10  4953.00  1391.30  4954.00  1392.10  4959.00  1392.10  4961.00
GR  1392.30  4966.00  1392.40  4967.00  1392.70  4968.00  1394.80  4973.00  1395.80  4977.00
GR  1395.60  4980.00  1395.30  4985.00  1394.30  4988.00  1392.90  4993.00  1389.90  4999.00
GR  1387.50  5003.00  1387.50  5012.00  1387.70  5013.00  1389.40  5019.00  1389.50  5024.00
GR  1389.70  5026.00  1390.40  5033.00  1391.00  5039.00  1391.30  5041.00  1391.20  5042.00
GR  1391.10  5044.00  1392.60  5047.00  1394.40  5050.00  1394.70  5051.00  1395.60  5055.00
GR  1394.00  5059.00  1393.60  5060.00  1391.50  5064.00  1391.00  5065.00  1391.20  5066.00
GR  1391.70  5068.00  1392.00  5077.00  1392.30  5085.00  1392.30  5086.00  1392.60  5095.00
GR  1392.70  5097.00  1392.90  5103.00  1392.80  5108.00  1392.80  5112.00  1392.70  5119.00
GR  1392.70  5120.00  1392.90  5127.00  1393.50  5131.00  1393.50  5136.00  1393.60  5139.00
GR  1393.60  5144.00  1393.60  5149.00  1393.80  5152.00  1394.20  5158.00  1394.20  5159.00
GR  1394.00  5164.00  1393.90  5167.00  1393.80  5168.00  1394.00  5175.00  1394.00  5178.00
GR  1393.90  5183.00  1394.00  5188.00  1394.10  5192.00  1393.90  5198.00  1393.90  5200.00
GR  1393.80  5207.00  1393.80  5208.00  1393.80  5216.00  1393.90  5219.00  1393.90  5221.00
GR  1393.90  5224.00  1393.90  5225.00  1393.80  5229.00  1393.80  5233.00  1393.60  5239.00
GR  1393.60  5241.00  1393.40  5249.00  1393.40  5250.00  1393.40  5257.00  1393.50  5260.00
GR  1393.50  5265.00  1393.50  5270.00  1393.50  5273.00  1393.70  5280.00  1393.80  5281.00
GR  1393.80  5285.00  1393.90  5290.00  1393.90  5291.00  1393.90  5298.00  1394.00  5302.00
GR  1394.20  5306.00  1394.30  5312.00  1394.40  5315.00  1394.40  5323.00  1394.70  5336.50
GR  1395.00  5350.00  1395.00  5356.00  1395.35  5367.50  1395.70  5379.00  1395.80  5381.00
GR  1395.90  5382.00  1396.00  5385.00  1396.20  5390.00  1396.40  5394.00  1396.60  5401.00
GR  1396.60  5402.00  1396.80  5406.00  1396.90  5410.00  1397.00  5412.00  1397.00  5421.00
GR  1397.00  5422.00  1397.20  5430.00  1397.20  5431.00  1397.40  5439.00  1397.40  5440.00
GR  1397.70  5448.00  1397.70  5449.00  1397.90  5458.00  1398.50  5477.00  1399.20  5484.00
GR  1399.10  5486.00  1399.30  5490.00  1399.10  5493.00  1399.20  5498.00  1399.10  5504.00
GR  1399.30  5507.00  1400.00  5513.00  1400.20  5522.00  1401.00  5536.00  1401.80  5550.00
GR  1405.00  5559.00  1405.20  5559.00  1405.20  5560.00  1405.30  5572.00  1405.10  5577.00
GR  1406.20  5580.00  1411.00  5589.00
GS     0.15     0.11     0.40     0.20     0.66     0.15     1.27     0.30     4.45     0.20
EJ     0.00     0.00     0.00     0.00     0.00     0.00     0.00     0.00     0.00     0.00
```

TI INITIAL BED MATERIAL COMPOSITION

SECTION	SIZE MM	FRACTION	SIZE MM	FRACTION	SIZE MM	FRACTION	SIZE MM	FRACTION	SIZE MM	FRACTION
137.00	0.15	0.115	0.40	0.208	0.66	0.156	1.27	0.313	4.45	0.208
218.00	0.15	0.115	0.40	0.208	0.66	0.156	1.27	0.312	4.45	0.208
339.00	0.15	0.115	0.40	0.208	0.66	0.156	1.27	0.313	4.45	0.208
352.00	0.15	0.115	0.40	0.208	0.66	0.156	1.27	0.313	4.45	0.208
398.00	0.15	0.115	0.40	0.208	0.66	0.156	1.27	0.312	4.45	0.208
424.00	0.15	0.115	0.40	0.208	0.66	0.156	1.27	0.312	4.45	0.208
611.00	0.15	0.115	0.40	0.208	0.66	0.156	1.27	0.312	4.45	0.208
818.00	0.15	0.115	0.40	0.208	0.66	0.156	1.27	0.312	4.45	0.208
930.00	0.15	0.115	0.40	0.208	0.66	0.156	1.27	0.313	4.45	0.208
1165.00	0.15	0.115	0.40	0.208	0.66	0.156	1.27	0.312	4.45	0.208
1413.00	0.15	0.115	0.40	0.208	0.66	0.156	1.27	0.313	4.45	0.208
1680.00	0.15	0.115	0.40	0.208	0.66	0.156	1.27	0.312	4.45	0.208
1760.00	0.15	0.115	0.40	0.208	0.66	0.156	1.27	0.313	4.45	0.208
1813.00	0.15	0.115	0.40	0.208	0.66	0.156	1.27	0.312	4.45	0.208
1941.00	0.15	0.115	0.40	0.208	0.66	0.156	1.27	0.312	4.45	0.208
2243.00	0.15	0.115	0.40	0.208	0.66	0.156	1.27	0.312	4.45	0.208
2634.00	0.15	0.115	0.40	0.208	0.66	0.156	1.27	0.312	4.45	0.208
2960.00	0.15	0.115	0.40	0.208	0.66	0.156	1.27	0.312	4.45	0.208
3361.00	0.15	0.115	0.40	0.208	0.66	0.156	1.27	0.313	4.45	0.208
3706.00	0.15	0.115	0.40	0.208	0.66	0.156	1.27	0.313	4.45	0.208
3785.00	0.15	0.115	0.40	0.208	0.66	0.156	1.27	0.312	4.45	0.208
3814.00	0.15	0.115	0.40	0.208	0.66	0.156	1.27	0.312	4.45	0.208
3845.00	0.15	0.115	0.40	0.208	0.66	0.156	1.27	0.313	4.45	0.208
3922.00	0.15	0.115	0.40	0.208	0.66	0.156	1.27	0.313	4.45	0.208
4001.00	0.15	0.115	0.40	0.208	0.66	0.156	1.27	0.313	4.45	0.208
4158.00	0.15	0.115	0.40	0.208	0.66	0.156	1.27	0.312	4.45	0.208
4334.00	0.15	0.115	0.40	0.208	0.66	0.156	1.27	0.312	4.45	0.208
4579.00	0.15	0.115	0.40	0.208	0.66	0.156	1.27	0.312	4.45	0.208
4974.00	0.15	0.115	0.40	0.208	0.66	0.156	1.27	0.312	4.45	0.208
5474.00	0.15	0.115	0.40	0.208	0.66	0.156	1.27	0.312	4.45	0.208
5702.00	0.15	0.115	0.40	0.208	0.66	0.156	1.27	0.312	4.45	0.208
5930.00	0.15	0.115	0.40	0.208	0.66	0.156	1.27	0.312	4.45	0.208
6083.00	0.15	0.115	0.40	0.208	0.66	0.156	1.27	0.312	4.45	0.208

6350.00	0.15	0.115	0.40	0.208	0.66	0.156	1.27	0.312	4.45	0.208
6406.00	0.15	0.115	0.40	0.208	0.66	0.156	1.27	0.312	4.45	0.208
6463.00	0.15	0.115	0.40	0.208	0.66	0.156	1.27	0.312	4.45	0.208
6822.00	0.15	0.115	0.40	0.208	0.66	0.156	1.27	0.313	4.45	0.208
7036.00	0.15	0.115	0.40	0.208	0.66	0.156	1.27	0.312	4.45	0.208
7171.00	0.15	0.115	0.40	0.208	0.66	0.156	1.27	0.313	4.45	0.208
7182.00	0.15	0.115	0.40	0.208	0.66	0.156	1.27	0.312	4.45	0.208
7220.00	0.15	0.115	0.40	0.208	0.66	0.156	1.27	0.312	4.45	0.208
7462.00	0.15	0.115	0.40	0.208	0.66	0.156	1.27	0.312	4.45	0.208
7674.00	0.15	0.115	0.40	0.208	0.66	0.156	1.27	0.313	4.45	0.208
7835.00	0.15	0.115	0.40	0.208	0.66	0.156	1.27	0.312	4.45	0.208
7977.00	0.15	0.115	0.40	0.208	0.66	0.156	1.27	0.313	4.45	0.208
8156.00	0.15	0.115	0.40	0.208	0.66	0.156	1.27	0.313	4.45	0.208
8333.00	0.15	0.115	0.40	0.208	0.66	0.156	1.27	0.312	4.45	0.208
8661.00	0.15	0.115	0.40	0.208	0.66	0.156	1.27	0.312	4.45	0.208
9076.00	0.15	0.115	0.40	0.208	0.66	0.156	1.27	0.312	4.45	0.208
9389.00	0.15	0.115	0.40	0.208	0.66	0.156	1.27	0.312	4.45	0.208
9468.00	0.15	0.115	0.40	0.208	0.66	0.156	1.27	0.312	4.45	0.208
9503.00	0.15	0.115	0.40	0.208	0.66	0.156	1.27	0.312	4.45	0.208
9595.00	0.15	0.115	0.40	0.208	0.66	0.156	1.27	0.313	4.45	0.208
9885.00	0.15	0.115	0.40	0.208	0.66	0.156	1.27	0.312	4.45	0.208
10056.00	0.15	0.115	0.40	0.208	0.66	0.156	1.27	0.312	4.45	0.208
10178.00	0.15	0.115	0.40	0.208	0.66	0.156	1.27	0.312	4.45	0.208
10196.00	0.15	0.115	0.40	0.208	0.66	0.156	1.27	0.312	4.45	0.208
10219.00	0.15	0.115	0.40	0.208	0.66	0.156	1.27	0.312	4.45	0.208
10593.00	0.15	0.115	0.40	0.208	0.66	0.156	1.27	0.312	4.45	0.208
10871.00	0.15	0.115	0.40	0.208	0.66	0.156	1.27	0.313	4.45	0.208
10947.00	0.15	0.115	0.40	0.208	0.66	0.156	1.27	0.312	4.45	0.208
11004.00	0.15	0.115	0.40	0.208	0.66	0.156	1.27	0.312	4.45	0.208
11267.00	0.15	0.115	0.40	0.208	0.66	0.156	1.27	0.312	4.45	0.208
11543.00	0.15	0.115	0.40	0.208	0.66	0.156	1.27	0.312	4.45	0.208
11783.00	0.15	0.115	0.40	0.208	0.66	0.156	1.27	0.313	4.45	0.208
12094.00	0.15	0.115	0.40	0.208	0.66	0.156	1.27	0.313	4.45	0.208
12370.00	0.15	0.115	0.40	0.208	0.66	0.156	1.27	0.312	4.45	0.208
12657.00	0.15	0.115	0.40	0.208	0.66	0.156	1.27	0.312	4.45	0.208

12784.00	0.15	0.115	0.40	0.208	0.66	0.156	1.27	0.312	4.45	0.208
12997.00	0.15	0.115	0.40	0.208	0.66	0.156	1.27	0.313	4.45	0.208
13357.00	0.15	0.115	0.40	0.208	0.66	0.156	1.27	0.312	4.45	0.208
13392.00	0.15	0.115	0.40	0.208	0.66	0.156	1.27	0.312	4.45	0.208
13427.00	0.15	0.115	0.40	0.208	0.66	0.156	1.27	0.312	4.45	0.208
13781.00	0.15	0.115	0.40	0.208	0.66	0.156	1.27	0.312	4.45	0.208
14059.00	0.15	0.115	0.40	0.208	0.66	0.156	1.27	0.313	4.45	0.208
14339.00	0.15	0.115	0.40	0.208	0.66	0.156	1.27	0.312	4.45	0.208
14524.00	0.15	0.115	0.40	0.208	0.66	0.156	1.27	0.312	4.45	0.208
14687.00	0.15	0.115	0.40	0.208	0.66	0.156	1.27	0.313	4.45	0.208

THE ENGELUND-HANSEN SEDIMENT FORMULA IS USED

FLUVIAL-12 100-YEAR RESULTS

TIME = 19.10 HRS DT = 16 SECS TIME STEP = 1105

SECTION	W.S.ELEV. FT	WIDTH FT	DEPTH FT	Q CFS	V FPS	SLOPE	D50 MM	QS/Q 1000 PPM	FR	SED. YIELD TONS
137.000	1211.72	114.0	5.72	4106	8.62	0.008141	0.79	28.85	0.74	0.984E+04
218.000	1212.32	103.1	5.67	4106	8.82	0.007734	0.90	16.78	0.73	0.104E+05
339.000	1213.20	98.2	5.28	4106	9.36	0.008946	0.94	33.35	0.78	0.102E+05
352.000	1213.54	91.1	6.28	4106	8.66	0.006441	0.85	11.62	0.67	0.999E+04
398.000	1213.70	88.3	5.54	4106	9.28	0.007690	0.85	29.12	0.73	0.102E+05
424.000	1214.40	171.9	5.37	4106	7.77	0.009944	0.71	18.05	0.78	0.100E+05
611.000	1215.80	336.1	5.20	4106	7.08	0.017638	0.78	51.92	0.95	0.107E+05
818.000	1217.60	294.5	4.68	4106	7.29	0.016306	0.91	24.38	0.93	0.123E+05
930.000	1218.70	262.4	4.77	4106	7.80	0.017488	0.87	49.76	0.97	0.131E+05
1165.000	1220.60	252.8	4.98	4106	7.75	0.016384	0.93	41.23	0.94	0.142E+05
1413.000	1225.37	309.5	2.67	4106	7.31	0.017549	0.87	41.37	0.96	0.121E+05
1680.000	1227.77	257.2	4.71	4106	7.87	0.017753	0.89	44.40	0.97	0.157E+05
1760.000	1229.37	219.5	4.44	4106	8.42	0.017863	0.92	52.42	1.00	0.160E+05
1813.000	1230.77	220.9	4.20	4106	8.35	0.017396	0.93	50.66	0.99	0.167E+05
1941.000	1232.59	149.6	3.95	4106	9.19	0.014417	0.92	46.95	0.94	0.180E+05
2243.000	1236.22	91.4	4.80	4106	10.50	0.011996	0.96	48.80	0.90	0.169E+05
2634.000	1241.03	101.9	5.10	4106	9.97	0.011498	0.91	43.85	0.87	0.145E+05
2960.000	1244.79	101.0	5.51	4106	9.99	0.011471	0.91	41.74	0.87	0.148E+05
3361.000	1249.04	82.6	6.59	4106	10.44	0.010380	0.95	45.87	0.84	0.161E+05
3706.000	1252.18	63.2	7.07	4106	10.88	0.008657	0.90	25.74	0.78	0.162E+05
3785.000	1252.87	59.1	6.60	4106	10.98	0.009191	0.84	55.02	0.77	0.155E+05
3814.000	1253.67	67.7	6.92	4106	9.54	0.006354	0.99	15.70	0.67	0.155E+05
3845.000	1254.48	118.9	6.40	4106	7.75	0.006124	0.94	0.23	0.65	0.156E+05
3922.000	1255.23	214.3	4.60	4106	8.08	0.015200	0.83	33.84	0.93	0.148E+05
4001.000	1256.65	266.7	5.38	4106	6.65	0.010653	0.93	51.34	0.77	0.140E+05
4158.000	1258.79	348.1	5.69	4106	7.10	0.018999	0.90	59.08	0.97	0.135E+05
4334.000	1261.60	313.7	5.54	4106	6.35	0.011289	1.00	5.57	0.78	0.136E+05
4579.000	1264.40	226.1	4.22	4106	8.10	0.016317	1.19	34.60	0.95	0.133E+05
4974.000	1270.11	176.8	3.80	4106	8.29	0.012834	0.97	34.05	0.87	0.132E+05
5474.000	1275.62	96.4	5.48	4106	9.82	0.010737	1.30	34.63	0.83	0.159E+05
5702.000	1279.48	373.3	6.78	4106	6.10	0.012540	1.00	20.82	0.80	0.129E+05
5930.000	1282.41	548.7	6.47	4106	5.19	0.012120	0.94	15.26	0.76	0.119E+05
6083.000	1284.38	645.1	6.16	4106	5.00	0.013328	0.85	12.35	0.78	0.111E+05
6350.000	1287.08	923.4	5.20	4106	4.93	0.020276	0.89	25.00	0.91	0.100E+05
6406.000	1288.73	1126.9	2.97	4106	4.63	0.021427	0.81	19.20	0.92	0.127E+05
6463.000	1289.06	136.0	3.92	4106	8.99	0.011845	1.01	35.39	0.86	0.174E+05
6822.000	1292.94	106.1	4.71	4106	9.62	0.010735	1.09	32.64	0.85	0.173E+05
7036.000	1296.04	215.2	5.26	4106	7.54	0.012183	1.02	32.38	0.84	0.157E+05
7171.000	1297.92	313.2	5.52	4106	6.25	0.010661	0.91	8.27	0.76	0.141E+05
7182.000	1297.92	248.6	3.69	4106	7.28	0.012973	0.97	32.99	0.85	0.154E+05
7220.000	1298.31	190.3	3.83	4106	7.44	0.009844	0.96	12.43	0.77	0.154E+05
7462.000	1301.10	226.2	4.98	4106	7.68	0.013726	1.04	34.96	0.88	0.140E+05
7674.000	1304.18	293.7	5.92	4106	6.63	0.011937	1.05	17.10	0.80	0.129E+05
7835.000	1306.25	292.1	6.01	4106	6.93	0.013711	1.20	24.83	0.86	0.130E+05
7977.000	1307.77	169.1	5.54	4106	7.73	0.009768	1.27	17.99	0.77	0.135E+05
8156.000	1310.29	430.7	6.42	4106	5.82	0.012914	1.18	17.45	0.80	0.124E+05
8333.000	1312.64	573.5	5.59	4106	5.03	0.011490	0.97	10.96	0.74	0.109E+05
8661.000	1316.73	503.4	6.49	4106	5.50	0.013102	1.21	14.41	0.80	0.125E+05
9076.000	1322.29	679.3	6.92	4106	4.91	0.013368	1.14	13.62	0.78	0.137E+05
9389.000	1326.39	943.9	4.57	4106	4.26	0.012816	0.86	9.95	0.74	0.123E+05
9468.000	1327.47	843.5	4.57	4106	4.56	0.013872	0.84	14.12	0.78	0.132E+05
9503.000	1327.94	775.2	4.80	4106	4.72	0.013958	0.83	15.04	0.79	0.132E+05
9595.000	1329.17	600.3	5.22	4106	5.10	0.012867	0.92	16.76	0.78	0.128E+05
9885.000	1332.96	860.3	5.85	4106	4.37	0.012353	0.78	11.81	0.74	0.105E+05
10056.000	1335.15	896.2	4.25	4106	4.37	0.013076	0.75	13.61	0.75	0.972E+04
10178.000	1336.75	819.6	3.78	4106	4.42	0.012051	0.65	13.28	0.73	0.104E+05
10196.000	1337.00	802.3	4.22	4106	4.07	0.008959	0.97	15.95	0.64	0.112E+05
10219.000	1337.11	622.8	4.05	4106	5.21	0.014406	0.85	19.01	0.82	0.115E+05
10593.000	1342.18	377.4	5.68	4106	6.08	0.012555	1.02	20.07	0.80	0.135E+05
10871.000	1346.39	1023.4	5.84	4106	4.35	0.015384	0.64	17.32	0.80	0.130E+05
10947.000	1347.29	457.7	5.58	4106	5.67	0.012826	0.94	21.06	0.79	0.154E+05
11004.000	1348.28	568.6	6.09	4106	4.96	0.010944	0.73	13.77	0.73	0.142E+05

11267.000	1351.18	507.3	6.02	4106	5.23	0.011125	0.81	16.86	0.74	0.128E+05
11543.000	1354.76	858.2	5.86	4106	4.41	0.012735	0.62	10.56	0.75	0.130E+05
11783.000	1357.83	479.8	6.03	4106	5.72	0.014116	0.74	27.05	0.82	0.141E+05
12094.000	1361.87	1112.4	5.61	4106	3.75	0.010484	0.82	20.21	0.67	0.125E+05
12370.000	1365.47	690.9	7.01	4106	5.33	0.017871	0.95	30.16	0.89	0.155E+05
12657.000	1369.75	796.2	6.59	4106	4.42	0.011549	0.82	5.24	0.72	0.148E+05
12784.000	1370.77	220.4	5.40	4106	7.13	0.010344	1.01	23.71	0.78	0.158E+05
12997.000	1373.69	698.7	7.87	4106	4.64	0.011463	0.72	9.96	0.73	0.158E+05
13357.000	1377.63	402.1	5.89	4106	5.69	0.010852	0.72	22.27	0.75	0.158E+05
13392.000	1378.21	639.2	5.06	4106	4.73	0.010829	0.61	12.12	0.71	0.153E+05
13427.000	1378.54	548.2	6.19	4106	5.15	0.011781	0.49	22.85	0.75	0.151E+05
13781.000	1382.18	664.9	5.07	4106	4.18	0.007551	0.59	23.11	0.61	0.136E+05
14059.000	1385.50	469.3	4.45	4106	6.25	0.018270	0.56	58.29	0.93	0.163E+05
14339.000	1389.09	512.6	6.11	4106	4.51	0.006919	0.50	27.62	0.60	0.193E+05
14524.000	1391.81	544.8	7.14	4106	6.10	0.020446	0.57	50.02	0.97	0.204E+05
14687.000	1394.49	390.3	6.99	4106	5.93	0.012083	0.87	49.46	0.79	0.221E+05

ID
17 SECTION 2634.00 TIME = 19.10 HRS WS =1241.03 WIDTH = 101.9

Z	DZ	TDZ	Y	Z	DZ	TDZ	Y	Z	DZ	TDZ	Y
1243.90	0.00	0.00	4926.0	1243.90	0.00	0.00	4928.0	1244.20	0.00	0.00	4931.0
1243.90	0.00	0.00	4933.0	1243.60	0.00	0.00	4934.0	1243.10	0.00	0.00	4936.0
1242.15	0.00	-0.35	4940.0	1239.18	0.00	-1.32	4944.1	1238.99	0.00	-0.51	4945.7
1239.03	0.00	-0.47	4949.9	1238.99	0.00	-0.61	4952.0	1238.99	0.00	-0.61	4953.0
1239.02	0.00	-0.38	4954.9	1238.73	0.00	-0.37	4957.7	1238.71	0.00	-0.29	4958.9
1238.70	0.00	-0.30	4959.2	1238.68	0.00	-0.22	4961.9	1238.55	0.00	-0.25	4962.8
1238.31	0.00	-0.49	4964.8	1237.49	0.00	-0.81	4966.5	1237.07	0.00	-0.73	4968.5
1236.64	0.00	-0.56	4971.7	1236.51	0.00	-0.59	4973.9	1236.47	0.00	-0.63	4975.0
1236.38	0.00	-0.62	4978.0	1236.35	0.00	-0.65	4979.0	1235.94	0.00	-1.06	4980.5
1235.94	0.00	-0.36	4983.2	1235.94	0.00	-0.06	4986.7	1235.94	0.00	0.14	4988.0
1235.94	0.00	0.94	4991.1	1235.94	0.00	1.34	4993.0	1235.94	0.00	1.74	4996.0
1235.93	0.00	1.54	4999.0	1235.93	0.00	1.53	5001.0	1235.93	0.00	1.64	5004.0
1235.93	0.00	1.54	5006.0	1235.93	0.00	1.43	5011.0	1235.93	0.00	1.63	5012.0
1235.93	0.00	1.63	5016.0	1235.93	0.00	2.83	5017.0	1235.93	0.00	2.83	5026.0
1235.93	0.00	1.63	5027.1	1235.93	0.00	-1.37	5031.9	1236.77	0.00	-2.53	5034.9
1237.22	0.00	-3.08	5036.6	1237.78	0.00	-3.52	5038.9	1240.86	0.00	-1.54	5043.2
1241.46	0.00	-1.24	5044.0	1245.10	0.00	0.00	5051.0	1245.30	0.00	0.00	5052.0
1245.50	0.00	0.00	5058.0	1245.20	0.00	0.00	5060.0	1245.30	0.00	0.00	5061.0
1245.60	0.00	0.00	5064.0	1245.40	0.00	0.00	5065.0	1244.90	0.00	0.00	5066.0
1244.10	0.00	0.00	5071.0	1243.20	0.00	0.00	5075.0	1242.80	0.00	0.00	5077.0
1243.40	0.00	0.00	5081.0	1243.70	0.00	0.00	5085.0	1243.50	0.00	0.00	5088.0
1243.50	0.00	0.00	5091.0	1243.50	0.00	0.00	5092.0	1243.50	0.00	0.00	5093.0
1243.40	0.00	0.00	5097.0	1243.50	0.00	0.00	5098.0	1243.30	0.00	0.00	5100.0
1243.30	0.00	0.00	5103.0	1243.40	0.00	0.00	5105.0	1243.20	0.00	0.00	5106.0
1243.10	0.00	0.00	5107.0	1243.20	0.00	0.00	5113.0	1243.30	0.00	0.00	5118.0
1243.30	0.00	0.00	5121.0	1243.20	0.00	0.00	5128.0	1243.20	0.00	0.00	5129.0
1243.30	0.00	0.00	5132.0	1243.60	0.00	0.00	5135.0	1243.30	0.00	0.00	5138.0
1243.50	0.00	0.00	5142.0	1243.40	0.00	0.00	5144.0	1243.40	0.00	0.00	5146.0
1243.50	0.00	0.00	5149.0	1243.50	0.00	0.00	5151.0	1243.40	0.00	0.00	5155.0
1243.40	0.00	0.00	5157.0	1243.30	0.00	0.00	5159.0	1243.20	0.00	0.00	5163.0
1243.20	0.00	0.00	5165.0	1243.20	0.00	0.00	5166.0	1243.30	0.00	0.00	5170.0
1243.20	0.00	0.00	5171.0	1243.30	0.00	0.00	5172.0	1243.30	0.00	0.00	5174.0
1243.10	0.00	0.00	5180.0	1243.10	0.00	0.00	5181.0	1243.10	0.00	0.00	5183.0
1243.40	0.00	0.00	5187.0	1243.40	0.00	0.00	5188.0	1243.40	0.00	0.00	5191.0
1243.40	0.00	0.00	5193.0	1243.30	0.00	0.00	5195.0	1243.40	0.00	0.00	5197.0
1243.40	0.00	0.00	5198.0	1243.40	0.00	0.00	5201.0	1243.20	0.00	0.00	5204.0
1243.20	0.00	0.00	5205.0	1243.20	0.00	0.00	5208.0	1243.30	0.00	0.00	5211.0
1243.30	0.00	0.00	5212.0	1243.30	0.00	0.00	5213.0	1243.30	0.00	0.00	5214.0
1243.20	0.00	0.00	5216.0	1243.10	0.00	0.00	5219.0	1243.10	0.00	0.00	5221.0
1243.00	0.00	0.00	5222.0	1243.00	0.00	0.00	5224.0	1243.10	0.00	0.00	5226.0
1243.70	0.00	0.00	5228.0	1243.90	0.00	0.00	5231.0	1243.50	0.00	0.00	5232.0
1243.90	0.00	0.00	5234.0	1243.90	0.00	0.00	5236.0	1243.90	0.00	0.00	5243.0
1244.00	0.00	0.00	5246.0	1243.60	0.00	0.00	5250.0	1243.10	0.00	0.00	5258.0
1243.60	0.00	0.00	5268.0	1243.60	0.00	0.00	5270.0	1243.40	0.00	0.00	5275.0
1243.70	0.00	0.00	5276.0	1243.80	0.00	0.00	5277.0	1243.70	0.00	0.00	5284.0
1243.70	0.00	0.00	5285.0	1244.10	0.00	0.00	5291.0	1244.10	0.00	0.00	5292.0
1244.10	0.00	0.00	5293.0	1244.00	0.00	0.00	5296.0	1243.70	0.00	0.00	5299.0
1243.70	0.00	0.00	5300.0	1243.70	0.00	0.00	5304.0	1243.80	0.00	0.00	5306.0
1244.00	0.00	0.00	5307.0	1243.90	0.00	0.00	5313.0	1243.80	0.00	0.00	5314.0
1243.80	0.00	0.00	5317.0	1244.00	0.00	0.00	5319.0	1244.10	0.00	0.00	5322.0
1243.80	0.00	0.00	5325.0	1243.90	0.00	0.00	5326.0	1244.10	0.00	0.00	5330.0
1243.90	0.00	0.00	5332.0	1243.80	0.00	0.00	5333.0	1243.90	0.00	0.00	5335.0
1244.10	0.00	0.00	5337.0	1244.00	0.00	0.00	5338.0	1244.00	0.00	0.00	5339.0
1243.90	0.00	0.00	5341.0	1243.90	0.00	0.00	5344.0	1243.80	0.00	0.00	5346.0
1243.70	0.00	0.00	5348.0	1244.10	0.00	0.00	5352.0	1244.10	0.00	0.00	5354.0
1244.20	0.00	0.00	5360.0	1244.20	0.00	0.00	5361.0	1244.30	0.00	0.00	5362.0
1244.40	0.00	0.00	5367.0	1244.40	0.00	0.00	5369.0	1244.30	0.00	0.00	5370.0
1244.30	0.00	0.00	5374.0	1244.30	0.00	0.00	5376.0	1244.30	0.00	0.00	5377.0
1244.30	0.00	0.00	5378.0	1244.40	0.00	0.00	5383.0	1244.60	0.00	0.00	5384.0
1244.70	0.00	0.00	5385.0	1244.50	0.00	0.00	5386.0	1244.60	0.00	0.00	5388.0
1245.20	0.00	0.00	5393.0	1245.60	0.00	0.00	5396.0	1246.30	0.00	0.00	5401.0
1246.40	0.00	0.00	5402.0	1247.60	0.00	0.00	5409.0	1247.70	0.00	0.00	5410.0
1248.50	0.00	0.00	5416.0	1249.30	0.00	0.00	5418.0	1250.30	0.00	0.00	5423.0
1250.70	0.00	0.00	5424.0	1250.70	0.00	0.00	5426.0	1252.00	0.00	0.00	5429.0
1252.20	0.00	0.00	5430.0	1253.80	0.00	0.00	5434.0	1254.10	0.00	0.00	5435.0

1254.30	0.00	0.00	5437.0

ID
16 SECTION 2243.00 TIME = 19.10 HRS WS =1236.22 WIDTH = 91.4

Z	DZ	TDZ	Y	Z	DZ	TDZ	Y	Z	DZ	TDZ	Y
1239.90	0.00	0.00	4939.0	1239.90	0.00	0.00	4941.0	1240.00	0.00	0.00	4944.0
1240.00	0.00	0.00	4946.0	1238.97	-0.06	-0.43	4949.0	1238.14	-0.04	-1.16	4950.0
1236.09	-0.02	-3.01	4952.8	1231.49	0.00	-5.21	4959.4	1231.42	0.00	-4.58	4963.6
1231.42	0.00	-3.88	4966.2	1231.42	0.00	-3.48	4967.1	1231.42	0.00	-1.98	4969.4
1231.42	0.00	-0.78	4972.9	1231.42	0.00	-0.68	4975.0	1231.42	0.00	-0.18	4977.0
1231.42	0.00	0.52	4982.0	1231.42	0.00	0.62	4984.0	1231.42	0.00	0.52	4985.0
1231.42	0.00	0.42	4990.0	1231.42	0.00	0.42	4992.0	1231.42	0.00	0.62	4995.0
1231.42	0.00	0.62	5004.0	1231.42	0.00	0.42	5005.0	1231.42	0.00	0.52	5007.0
1231.42	0.00	0.52	5008.0	1231.42	0.00	0.52	5010.0	1231.42	0.00	0.32	5013.0
1231.42	0.00	0.12	5014.0	1231.42	0.00	-0.38	5017.0	1231.42	0.00	-0.58	5017.8
1231.42	0.00	-1.28	5019.0	1231.42	0.00	-1.88	5020.5	1231.42	0.00	-2.58	5022.1
1231.42	0.00	-3.28	5025.2	1231.42	0.00	-3.68	5028.4	1231.42	0.00	-3.78	5029.8
1231.42	0.00	-3.78	5031.6	1234.23	0.00	-1.37	5036.3	1234.23	0.00	-1.57	5037.5
1234.28	0.00	-1.82	5038.8	1234.37	-0.01	-2.03	5041.6	1236.82	-0.03	-0.88	5045.0
1239.30	0.00	0.00	5050.0	1239.40	0.00	0.00	5051.0	1239.80	0.00	0.00	5054.0
1240.30	0.00	0.00	5057.0	1240.00	0.00	0.00	5060.0	1240.00	0.00	0.00	5061.0
1239.90	0.00	0.00	5062.0	1239.90	0.00	0.00	5063.0	1239.90	0.00	0.00	5065.0
1239.10	0.00	0.00	5069.0	1239.00	0.00	0.00	5069.2	1238.90	0.00	0.00	5070.0
1238.60	0.00	0.00	5073.0	1237.80	0.00	0.00	5078.0	1238.40	0.00	0.00	5086.0
1238.60	0.00	0.00	5091.0	1238.40	0.00	0.00	5094.0	1238.30	0.00	0.00	5098.0
1238.10	0.00	0.00	5102.0	1238.40	0.00	0.00	5105.0	1238.40	0.00	0.00	5106.0
1238.40	0.00	0.00	5110.0	1238.40	0.00	0.00	5112.0	1238.40	0.00	0.00	5113.0
1238.50	0.00	0.00	5119.0	1238.70	0.00	0.00	5124.0	1238.80	0.00	0.00	5125.0
1238.80	0.00	0.00	5126.0	1238.90	0.00	0.00	5131.0	1239.00	0.00	0.00	5132.0
1238.90	0.00	0.00	5133.0	1238.60	0.00	0.00	5135.0	1238.50	0.00	0.00	5137.0
1238.40	0.00	0.00	5140.0	1238.20	0.00	0.00	5143.0	1238.20	0.00	0.00	5145.0
1238.30	0.00	0.00	5148.0	1238.30	0.00	0.00	5151.0	1238.30	0.00	0.00	5152.0
1238.40	0.00	0.00	5153.0	1238.40	0.00	0.00	5156.0	1238.30	0.00	0.00	5159.0
1238.20	0.00	0.00	5163.0	1238.00	0.00	0.00	5168.0	1238.10	0.00	0.00	5171.0
1238.10	0.00	0.00	5175.0	1238.20	0.00	0.00	5180.0	1238.20	0.00	0.00	5182.0
1238.20	0.00	0.00	5186.0	1238.30	0.00	0.00	5189.0	1238.60	0.00	0.00	5191.0
1238.70	0.00	0.00	5194.0	1238.60	0.00	0.00	5196.0	1238.50	0.00	0.00	5198.0
1238.40	0.00	0.00	5199.0	1238.70	0.00	0.00	5202.0	1238.70	0.00	0.00	5203.0
1238.60	0.00	0.00	5205.0	1238.30	0.00	0.00	5207.0	1238.40	0.00	0.00	5210.0
1238.30	0.00	0.00	5211.0	1238.40	0.00	0.00	5215.0	1238.40	0.00	0.00	5216.0
1238.60	0.00	0.00	5219.0	1238.30	0.00	0.00	5223.0	1238.40	0.00	0.00	5226.0
1238.50	0.00	0.00	5230.0	1238.50	0.00	0.00	5231.0	1238.50	0.00	0.00	5232.0
1238.50	0.00	0.00	5238.0	1238.60	0.00	0.00	5241.0	1238.70	0.00	0.00	5245.0
1238.70	0.00	0.00	5246.0	1238.90	0.00	0.00	5248.0	1239.00	0.00	0.00	5253.0
1238.90	0.00	0.00	5254.0	1238.80	0.00	0.00	5257.0	1238.70	0.00	0.00	5259.0
1238.80	0.00	0.00	5260.0	1238.90	0.00	0.00	5261.0	1239.00	0.00	0.00	5265.0
1239.10	0.00	0.00	5267.0	1238.90	0.00	0.00	5269.0	1238.90	0.00	0.00	5270.0
1239.00	0.00	0.00	5274.0	1239.00	0.00	0.00	5275.0	1239.10	0.00	0.00	5279.0
1239.00	0.00	0.00	5282.0	1239.00	0.00	0.00	5283.0	1239.10	0.00	0.00	5288.0
1239.10	0.00	0.00	5291.0	1239.10	0.00	0.00	5293.0	1239.10	0.00	0.00	5294.0
1239.20	0.00	0.00	5295.0	1239.20	0.00	0.00	5299.0	1239.10	0.00	0.00	5301.0
1239.20	0.00	0.00	5306.0	1239.30	0.00	0.00	5308.0	1239.60	0.00	0.00	5314.0
1239.60	0.00	0.00	5316.0	1239.60	0.00	0.00	5321.0	1239.60	0.00	0.00	5322.0
1239.60	0.00	0.00	5324.0	1239.60	0.00	0.00	5327.0	1239.60	0.00	0.00	5329.0
1239.70	0.00	0.00	5330.0	1239.70	0.00	0.00	5331.0	1239.80	0.00	0.00	5335.0
1239.90	0.00	0.00	5338.0	1240.00	0.00	0.00	5339.0	1239.90	0.00	0.00	5343.0
1240.00	0.00	0.00	5345.0	1239.90	0.00	0.00	5346.0	1239.90	0.00	0.00	5349.0
1239.90	0.00	0.00	5350.0	1239.90	0.00	0.00	5351.0	1240.10	0.00	0.00	5357.0
1240.20	0.00	0.00	5358.0	1240.10	0.00	0.00	5362.0	1240.10	0.00	0.00	5364.0
1240.10	0.00	0.00	5366.0	1240.40	0.00	0.00	5370.0	1240.90	0.00	0.00	5372.0
1241.90	0.00	0.00	5375.0	1241.88	0.00	0.08	5377.0	1243.33	0.00	-0.07	5379.0
1245.20	0.00	0.00	5382.0	1246.20	0.00	0.00	5384.0	1247.15	0.00	0.05	5386.0
1247.87	0.00	-0.03	5387.0	1250.10	0.00	0.00	5391.0	1252.30	0.00	0.00	5395.0
1254.40	0.00	0.00	5398.0	1256.60	0.00	0.00	5402.0				

ID
15 SECTION 1941.00 TIME = 19.10 HRS WS =1232.59 WIDTH = 149.6

Z	DZ	TDZ	Y	Z	DZ	TDZ	Y	Z	DZ	TDZ	Y

1236.90	0.00	0.00	4891.0	1236.90	0.00	0.00	4894.0	1237.00	0.00	0.00	4897.0
1236.60	0.00	0.00	4900.0	1235.70	0.00	0.00	4904.0	1235.60	0.00	0.00	4905.0
1232.60	0.00	0.00	4912.0	1230.69	-0.05	-2.01	4914.9	1230.65	-0.05	-1.75	4917.2
1230.68	-0.05	-1.52	4918.7	1230.68	-0.05	-1.22	4920.3	1230.69	-0.05	-1.11	4922.6
1230.68	-0.05	-0.93	4924.4	1230.65	-0.05	-0.85	4927.3	1230.63	-0.05	-1.07	4928.7
1230.66	-0.05	-0.44	4931.0	1229.62	0.03	-1.18	4936.4	1229.59	0.03	-1.01	4938.6
1229.58	0.03	-0.92	4940.3	1229.56	0.03	-0.84	4942.4	1229.53	0.03	-0.67	4944.5
1229.49	0.03	-0.91	4949.5	1229.47	0.03	-1.03	4951.0	1229.45	0.03	-0.95	4953.5
1229.40	0.03	-1.20	4958.0	1229.40	0.03	-1.20	4958.7	1229.37	0.03	-0.73	4961.9
1229.35	0.03	-0.95	4963.7	1229.35	0.03	-1.05	4964.6	1229.34	0.03	-0.96	4965.7
1229.05	0.03	-1.05	4969.5	1229.02	0.03	-0.57	4971.2	1229.00	0.03	-0.10	4973.5
1228.93	0.03	1.13	4979.0	1228.90	0.03	0.90	4981.0	1228.84	0.03	0.64	4986.0
1228.81	0.03	0.21	4989.0	1228.75	0.03	0.04	4994.0	1228.73	0.03	0.33	4995.0
1228.73	0.03	0.93	4995.2	1228.68	0.03	0.88	5004.0	1228.69	0.03	0.59	5005.0
1228.80	0.03	-0.90	5014.5	1228.85	0.03	-2.05	5019.0	1228.89	0.03	-1.91	5022.6
1230.14	-0.05	-0.96	5027.9	1230.13	-0.05	-1.27	5030.8	1230.13	-0.05	-1.27	5032.4
1230.16	0.03	-1.24	5034.1	1230.15	0.03	-1.65	5037.2	1230.11	-0.05	-1.89	5040.2
1230.15	-0.05	-1.85	5041.0	1230.15	-0.05	-1.65	5043.0	1230.15	-0.05	-1.35	5046.9
1230.14	-0.05	-1.36	5049.6	1230.15	-0.05	-1.65	5052.3	1230.13	-0.05	-2.27	5056.1
1230.19	-0.03	-2.81	5058.4	1234.27	-0.03	-0.03	5064.0	1234.20	0.00	0.00	5065.0
1233.90	0.00	0.00	5068.0	1234.00	0.00	0.00	5068.2	1234.10	0.00	0.00	5069.0
1234.10	0.00	0.00	5070.0	1236.10	0.00	0.00	5076.0	1236.10	0.00	0.00	5078.0
1236.80	0.00	0.00	5082.0	1237.50	0.00	0.00	5084.0	1237.90	0.00	0.00	5087.0
1238.10	0.00	0.00	5088.0	1238.20	0.00	0.00	5089.0	1239.10	0.00	0.00	5097.0
1239.00	0.00	0.00	5098.0	1238.90	0.00	0.00	5101.0	1238.90	0.00	0.00	5105.0
1238.50	0.00	0.00	5112.0	1238.40	0.00	0.00	5113.0	1238.30	0.00	0.00	5114.0
1236.80	0.00	0.00	5121.0	1236.20	0.00	0.00	5124.0	1234.70	0.00	0.00	5129.0
1235.00	0.00	0.00	5130.0	1235.30	0.00	0.00	5132.0	1234.80	0.00	0.00	5134.0
1234.20	0.00	0.00	5137.0	1234.10	0.00	0.00	5140.0	1233.80	0.00	0.00	5144.0
1233.80	0.00	0.00	5145.0	1233.90	0.00	0.00	5147.0	1233.80	0.00	0.00	5150.0
1233.80	0.00	0.00	5151.0	1233.80	0.00	0.00	5154.0	1233.70	0.00	0.00	5156.0
1233.60	0.00	0.00	5158.0	1233.50	0.00	0.00	5160.0	1233.60	0.00	0.00	5164.0
1233.50	0.00	0.00	5167.0	1233.60	0.00	0.00	5170.0	1233.60	0.00	0.00	5172.0
1233.70	0.00	0.00	5173.0	1233.80	0.00	0.00	5176.0	1233.80	0.00	0.00	5177.0
1233.70	0.00	0.00	5181.0	1233.80	0.00	0.00	5183.0	1233.70	0.00	0.00	5187.0
1233.70	0.00	0.00	5189.0	1233.80	0.00	0.00	5190.0	1233.70	0.00	0.00	5191.0
1233.80	0.00	0.00	5198.0	1233.90	0.00	0.00	5203.0	1233.90	0.00	0.00	5205.0
1233.90	0.00	0.00	5208.0	1234.00	0.00	0.00	5209.0	1233.90	0.00	0.00	5212.0
1234.00	0.00	0.00	5215.0	1234.00	0.00	0.00	5216.0	1234.00	0.00	0.00	5217.0
1233.80	0.00	0.00	5223.0	1233.90	0.00	0.00	5224.0	1234.00	0.00	0.00	5229.0
1233.90	0.00	0.00	5230.0	1233.90	0.00	0.00	5232.0	1233.80	0.00	0.00	5234.0
1233.90	0.00	0.00	5235.0	1233.90	0.00	0.00	5237.0	1233.80	0.00	0.00	5239.0
1233.90	0.00	0.00	5242.0	1233.90	0.00	0.00	5243.0	1233.90	0.00	0.00	5244.0
1233.90	0.00	0.00	5246.0	1234.10	0.00	0.00	5251.0	1234.00	0.00	0.00	5255.0
1234.00	0.00	0.00	5258.0	1234.10	0.00	0.00	5259.0	1234.10	0.00	0.00	5264.0
1234.10	0.00	0.00	5265.0	1234.20	0.00	0.00	5267.0	1234.20	0.00	0.00	5268.0
1234.10	0.00	0.00	5273.0	1234.20	0.00	0.00	5276.0	1234.30	0.00	0.00	5277.0
1234.30	0.00	0.00	5280.0	1234.60	0.00	0.00	5287.0	1234.50	0.00	0.00	5289.0
1234.60	0.00	0.00	5292.0	1234.60	0.00	0.00	5295.0	1234.70	0.00	0.00	5296.0
1234.80	0.00	0.00	5299.0	1234.50	0.00	0.00	5302.0	1234.50	0.00	0.00	5304.0
1234.50	0.00	0.00	5309.0	1234.60	0.00	0.00	5313.0	1234.70	0.00	0.00	5314.0
1234.70	0.00	0.00	5316.0	1234.70	0.00	0.00	5317.0	1234.80	0.00	0.00	5320.0
1234.90	0.00	0.00	5323.0	1235.00	0.00	0.00	5325.0	1235.30	0.00	0.00	5329.0
1235.70	0.00	0.00	5331.0	1235.60	0.00	0.00	5332.0	1235.60	0.00	0.00	5334.0
1235.70	0.00	0.00	5335.0	1235.80	0.00	0.00	5336.0	1236.30	0.00	0.00	5341.0
1236.30	0.00	0.00	5342.0	1236.00	0.00	0.00	5343.0	1236.10	0.00	0.00	5344.0
1236.00	0.00	0.00	5347.0	1236.00	0.00	0.00	5349.0	1236.10	0.00	0.00	5350.0
1236.20	0.00	0.00	5354.0	1236.30	0.00	0.00	5357.0	1236.60	0.00	0.00	5362.0
1236.70	0.00	0.00	5364.0	1236.90	0.00	0.00	5367.0	1237.00	0.00	0.00	5368.0
1237.10	0.00	0.00	5369.0	1237.10	0.00	0.00	5370.0	1237.20	0.00	0.00	5372.0
1237.90	0.00	0.00	5374.0	1238.30	0.00	0.00	5377.0	1238.60	0.00	0.00	5379.0
1238.90	0.00	0.00	5381.0	1239.00	0.00	0.00	5384.0	1239.30	0.00	0.00	5385.0
1240.40	0.00	0.00	5390.0	1241.24	0.00	0.04	5396.0	1243.42	0.00	-0.08	5399.0
1244.30	0.00	0.00	5401.0	1245.00	0.00	0.00	5404.0	1246.80	0.00	0.00	5408.0
1247.90	0.00	0.00	5411.0	1248.00	0.00	0.00	5411.2	1250.80	0.00	0.10	5417.0
1251.53	0.00	-0.17	5418.0	1253.50	0.00	0.00	5421.0	1254.30	0.00	0.00	5423.0
1256.00	0.00	0.00	5426.0								

ID
14 SECTION 1813.00 TIME = 19.10 HRS WS =1230.77 WIDTH = 220.9

Z	DZ	TDZ	Y	Z	DZ	TDZ	Y	Z	DZ	TDZ	Y
1239.00	0.00	0.00	471.0	1238.64	0.00	0.00	471.5	1238.00	0.00	0.00	473.7
1237.00	0.00	0.00	477.0	1236.00	0.00	0.00	480.0	1235.00	0.00	0.00	483.0
1234.00	0.00	0.00	486.0	1233.00	0.00	0.00	489.0	1232.00	0.00	0.00	492.0
1231.00	0.00	0.00	495.7	1230.77	0.00	-0.03	497.7	1229.74	0.00	-0.26	509.4
1229.74	0.00	0.74	526.4	1229.67	0.00	1.67	529.2	1229.25	0.00	2.25	534.6
1229.19	0.00	3.19	539.8	1229.08	0.00	3.37	549.2	1228.94	0.00	2.94	560.1
1228.70	0.00	1.70	571.3	1228.65	0.00	0.65	580.9	1228.94	0.00	0.55	594.2
1228.14	0.00	0.14	610.7	1226.93	-0.01	-0.07	618.5	1226.64	-0.01	0.64	626.8
1226.56	-0.01	1.17	644.9	1226.57	-0.01	0.87	656.2	1227.52	-0.01	1.52	667.4
1228.52	0.00	1.70	674.2	1228.82	0.00	1.91	691.0	1229.41	0.00	2.41	708.1
1229.84	0.00	1.84	710.6	1230.24	0.00	1.24	712.9	1230.48	0.00	0.48	715.8
1230.55	0.00	0.09	717.7	1231.00	0.00	0.00	719.5	1232.00	0.00	0.00	725.2
1233.00	0.00	0.00	731.3	1234.00	0.00	0.00	739.1	1235.00	0.00	0.00	751.7
1235.00	0.00	0.00	762.0								

ID
13 SECTION 1760.00 TIME = 19.10 HRS WS =1229.37 WIDTH = 219.5

Z	DZ	TDZ	Y	Z	DZ	TDZ	Y	Z	DZ	TDZ	Y
1238.00	0.00	0.00	383.0	1237.94	0.00	0.00	383.2	1237.63	0.00	0.00	399.9
1237.63	0.00	0.00	401.9	1237.92	0.00	0.00	420.1	1238.20	0.00	0.00	438.4
1237.00	0.00	0.00	444.2	1236.00	0.00	0.00	447.2	1235.00	0.00	0.00	450.2
1234.00	0.00	0.00	453.2	1233.00	0.00	0.00	456.2	1232.00	0.00	0.00	459.2
1231.00	0.00	0.00	462.2	1230.00	0.00	0.00	465.4	1229.50	0.00	0.00	479.5
1229.42	0.00	0.42	493.8	1229.40	0.00	1.40	501.6	1229.05	0.00	2.05	503.3
1228.68	0.00	2.68	505.0	1228.61	0.00	3.61	507.4	1228.57	0.00	3.87	511.9
1228.57	0.00	3.57	515.5	1228.56	0.00	3.46	517.4	1228.55	0.00	3.55	519.6
1228.51	0.00	3.72	523.7	1228.51	0.00	3.51	526.9	1228.48	0.00	2.48	530.5
1228.47	0.00	1.97	532.7	1228.17	0.00	1.97	535.8	1228.19	0.00	1.19	542.3
1228.35	0.00	0.68	557.2	1228.24	0.00	0.91	568.6	1227.91	0.00	0.91	579.8
1228.11	0.00	1.11	584.0	1227.78	0.00	0.78	585.2	1227.97	0.00	0.45	601.4
1227.57	0.00	0.54	611.0	1227.73	0.00	0.33	623.6	1227.63	0.00	0.13	631.9
1226.75	0.00	-0.25	638.1	1224.92	-0.01	-1.08	647.8	1224.92	-0.01	-0.08	666.5
1224.92	-0.01	0.92	673.6	1224.92	-0.01	1.12	676.5	1224.92	-0.01	1.12	681.7
1224.92	-0.01	0.92	685.9	1224.92	-0.01	-0.08	691.6	1226.44	0.00	0.84	704.3
1226.09	0.00	1.09	708.6	1226.59	0.00	0.59	712.6	1227.00	0.00	0.00	715.7
1228.84	0.00	0.84	718.3	1229.42	0.00	0.42	721.5	1230.00	0.00	0.00	724.9
1231.00	0.00	0.00	728.1	1232.00	0.00	0.00	731.4	1233.00	0.00	0.00	734.6
1234.00	0.00	0.00	738.0	1235.00	0.00	0.00	743.6	1235.89	0.00	0.00	750.5
1235.56	0.00	0.00	768.7	1235.22	0.00	0.00	787.0	1234.89	0.00	0.00	805.2
1234.56	0.00	0.00	823.4								

ID
12 SECTION 1680.00 TIME = 19.10 HRS WS =1227.77 WIDTH = 257.2

Z	DZ	TDZ	Y	Z	DZ	TDZ	Y	Z	DZ	TDZ	Y
1235.10	0.00	0.00	1213.3	1235.04	0.00	0.00	1213.5	1234.81	0.00	0.00	1229.7
1234.82	0.00	0.00	1231.7	1234.00	0.00	0.00	1237.2	1233.00	0.00	0.00	1240.3
1232.00	0.00	0.00	1243.5	1231.00	0.00	0.00	1246.6	1230.00	0.00	0.00	1249.8
1229.00	0.00	0.00	1252.9	1228.00	0.00	0.00	1256.1	1227.08	0.00	0.02	1259.2
1226.97	0.00	-0.03	1261.6	1223.06	0.01	-2.94	1267.2	1223.72	0.01	-1.29	1269.1
1223.55	0.01	-0.45	1270.0	1223.77	0.01	0.53	1282.1	1224.68	0.00	0.68	1294.2
1224.80	0.00	-0.20	1300.0	1225.13	0.00	-0.48	1306.3	1224.92	0.00	-0.08	1311.1
1224.99	0.00	0.27	1317.8	1224.42	0.01	-0.58	1324.5	1224.75	0.00	-1.25	1327.0
1226.93	0.00	0.10	1334.1	1226.55	0.00	-0.05	1351.9	1225.28	0.00	-0.72	1369.9
1225.32	0.00	-0.22	1382.4	1225.35	0.00	-0.65	1391.4	1227.11	0.00	0.11	1393.9
1227.13	0.00	0.03	1394.6	1227.11	0.00	0.11	1395.2	1226.78	0.00	0.11	1400.6
1227.12	0.00	0.12	1408.1	1227.13	0.00	0.04	1410.2	1227.12	0.00	0.12	1412.8
1225.56	0.00	-0.44	1420.2	1225.77	0.00	0.13	1424.0	1225.64	0.00	-0.36	1432.5
1226.95	0.00	0.17	1448.1	1225.79	0.00	-0.21	1456.9	1225.81	0.00	0.81	1472.3
1226.13	0.00	2.13	1490.5	1226.03	0.00	2.73	1496.1	1226.04	0.00	2.74	1503.2
1226.16	0.00	2.16	1505.2	1226.58	0.00	1.58	1508.1	1227.18	0.00	1.18	1509.6
1227.60	0.00	0.60	1512.7	1228.00	0.00	0.00	1516.1	1229.00	0.00	0.00	1519.0
1230.00	0.00	0.00	1522.2	1230.00	0.00	0.00	1523.2	1230.00	0.00	0.00	1539.2
1230.00	0.00	0.00	1555.1	1231.00	0.00	0.00	1561.5	1232.00	0.00	0.00	1568.0
1233.00	0.00	0.00	1574.8	1234.00	0.00	0.00	1582.4	1235.00	0.00	0.00	1590.9

1235.09	0.00	0.00	1593.3	1234.67	0.00	0.00	1610.1	1234.25	0.00	0.00	1626.8
1233.84	0.00	0.00	1643.5	1233.42	0.00	0.00	1660.3	1233.00	0.00	0.00	1677.0
1232.00	0.00	0.00	1682.4	1231.00	0.00	0.00	1687.5	1230.00	0.00	0.00	1692.6
1230.00	0.00	0.00	1701.3	1230.40	0.00	0.00	1711.0	1230.30	0.00	0.00	1712.5
1230.28	0.00	0.00	1727.6	1230.26	0.00	0.00	1742.6				

ID
11 SECTION 1413.00 TIME = 19.10 HRS WS =1225.37 WIDTH = 309.5

Z	DZ	TDZ	Y	Z	DZ	TDZ	Y	Z	DZ	TDZ	Y
1231.80	0.00	0.00	957.0	1231.50	0.00	0.00	973.2	1231.46	0.00	0.00	975.2
1231.00	0.00	0.00	976.9	1230.00	0.00	0.00	980.0	1229.00	0.00	0.00	983.1
1228.00	0.00	0.00	986.2	1227.00	0.00	0.00	989.3	1226.00	0.00	0.00	992.3
1225.15	0.00	0.15	995.2	1224.72	0.00	0.12	995.8	1225.00	0.00	0.00	1000.3
1225.21	0.00	0.03	1002.3	1225.00	0.00	0.00	1007.0	1223.46	0.00	-0.54	1009.5
1222.76	0.00	-0.24	1013.9	1222.80	0.00	0.79	1018.6	1222.79	0.00	1.79	1022.9
1222.70	0.00	1.90	1031.5	1222.81	0.00	1.91	1043.4	1222.92	0.00	1.92	1055.2
1223.10	0.00	1.10	1068.7	1223.12	0.00	0.92	1083.0	1223.20	0.00	0.80	1097.3
1223.16	0.00	1.16	1115.6	1223.19	0.00	1.29	1133.5	1223.21	0.00	1.42	1151.5
1223.23	0.00	1.81	1162.4	1223.18	0.00	2.13	1173.4	1223.15	0.00	2.15	1177.2
1223.16	0.00	2.16	1181.2	1223.09	0.00	1.09	1192.4	1223.52	0.00	0.52	1195.0
1223.12	0.00	-0.88	1197.4	1225.01	0.00	0.00	1207.7	1225.22	0.00	0.02	1210.6
1225.01	0.00	0.00	1214.7	1224.52	0.00	-0.13	1227.8	1224.17	0.00	-0.13	1240.8
1224.17	0.00	0.17	1246.7	1224.17	0.00	0.27	1259.0	1223.95	0.00	0.25	1270.1
1223.90	0.00	0.40	1281.3	1223.74	0.00	0.74	1289.1	1223.41	0.00	1.31	1292.4
1223.78	0.00	0.78	1300.2	1224.37	0.00	0.37	1302.1	1225.29	0.00	0.29	1303.6
1226.00	0.00	0.00	1306.6	1226.30	0.00	0.00	1308.2	1226.32	0.00	0.00	1325.8
1226.33	0.00	0.00	1343.5	1226.35	0.00	0.00	1361.2	1226.37	0.00	0.00	1378.9
1226.38	0.00	0.00	1396.6	1226.40	0.00	0.00	1414.3	1226.55	0.00	0.00	1433.0
1226.70	0.00	0.00	1451.6	1226.85	0.00	0.00	1470.3	1227.00	0.00	0.00	1489.0

ID
10 SECTION 1165.00 TIME = 19.10 HRS WS =1220.60 WIDTH = 252.8

Z	DZ	TDZ	Y	Z	DZ	TDZ	Y	Z	DZ	TDZ	Y
1229.40	0.00	0.00	819.9	1229.05	0.00	0.00	835.9	1229.00	0.00	0.00	837.9
1229.00	0.00	0.00	838.1	1228.00	0.00	0.00	841.1	1227.00	0.00	0.00	844.1
1226.00	0.00	0.00	847.1	1225.00	0.00	0.00	850.1	1225.00	0.00	0.00	852.5
1225.00	0.00	0.00	855.2	1225.10	0.00	0.00	855.8	1225.00	0.00	0.00	856.4
1224.00	0.00	0.00	856.8	1223.00	0.00	0.00	857.0	1222.00	0.00	0.00	857.3
1221.00	0.00	0.00	857.6	1220.35	-0.02	0.35	858.0	1219.34	0.00	0.24	869.0
1218.97	0.00	-0.38	884.5	1219.20	0.00	-0.41	900.0	1218.60	0.00	-0.40	919.4
1218.08	0.00	-0.42	925.5	1218.45	0.00	-0.53	940.3	1218.33	0.00	-0.46	950.9
1217.82	0.00	-0.78	961.5	1218.20	0.00	-0.80	971.0	1218.19	0.00	-0.91	972.8
1218.17	0.00	-0.83	975.1	1218.15	0.00	-0.75	976.8	1218.13	0.00	-0.86	978.9
1218.08	0.00	-1.12	985.7	1218.03	0.00	-0.97	990.8	1218.01	0.00	-0.89	993.2
1217.92	0.00	-0.98	1001.7	1217.90	0.00	-1.10	1003.9	1217.89	0.00	-1.32	1005.9
1217.87	0.00	-1.13	1007.5	1215.63	0.00	-2.47	1013.1	1217.21	0.00	-1.34	1031.7
1218.52	0.00	-0.48	1050.2	1218.75	0.00	-0.75	1064.4	1219.18	0.00	-0.82	1078.4
1220.30	0.00	-0.20	1083.5	1219.00	-0.02	-1.10	1092.8	1221.00	0.00	0.00	1097.8
1222.00	0.00	0.00	1100.2	1222.00	0.00	0.00	1100.8	1221.50	0.00	0.00	1112.2
1220.66	-0.01	-0.34	1123.6	1219.50	0.00	-0.50	1125.2	1219.96	0.00	0.46	1131.6
1220.35	-0.02	0.35	1136.1	1221.00	0.00	0.00	1140.2	1221.23	0.00	0.00	1144.1
1221.00	0.00	0.00	1160.5	1220.80	0.00	0.00	1166.6	1221.00	0.00	0.00	1170.5
1222.00	0.00	0.00	1173.9	1223.00	0.00	0.00	1176.9	1223.54	0.00	0.00	1178.5
1223.53	0.00	0.00	1197.0	1223.52	0.00	0.00	1215.5	1223.51	0.00	0.00	1234.0
1223.50	0.00	0.00	1252.5								

ID
9 SECTION 930.00 TIME = 19.10 HRS WS =1218.70 WIDTH = 262.4

Z	DZ	TDZ	Y	Z	DZ	TDZ	Y	Z	DZ	TDZ	Y
1227.20	0.00	0.00	628.2	1226.95	0.00	0.00	644.4	1227.00	0.00	0.00	646.4
1226.00	0.00	0.00	649.4	1225.00	0.00	0.00	652.4	1224.00	0.00	0.00	655.5
1223.00	0.00	0.00	658.5	1222.00	0.00	0.00	661.6	1221.46	0.00	0.00	663.6
1220.62	0.00	-0.38	670.7	1219.84	0.00	-0.16	671.7	1218.99	0.00	-0.01	672.9
1217.62	0.00	-0.38	674.9	1217.47	0.00	0.47	688.2	1217.46	0.00	1.46	689.8
1216.78	0.00	1.48	697.1	1216.94	0.00	1.30	716.5	1216.97	0.00	0.99	735.9

1216.93	0.00	1.09	745.9	1216.70	0.00	1.00	756.0	1216.86	0.00	0.98	762.1
1216.80	0.00	0.80	774.2	1217.05	0.00	0.55	781.5	1216.66	0.00	0.66	800.2
1215.33	-0.01	-0.17	820.0	1213.92	-0.01	-1.08	839.8	1213.92	-0.01	-1.08	840.3
1215.49	-0.01	-0.51	850.0	1217.18	0.00	0.18	855.9	1217.18	0.00	0.18	856.5
1217.18	0.00	0.18	856.9	1217.19	0.00	0.39	870.7	1217.02	0.00	0.42	884.4
1217.17	0.00	0.77	898.5	1217.20	0.00	0.50	911.9	1217.20	0.00	0.20	925.2
1217.28	0.00	-0.72	932.9	1219.00	0.00	0.00	936.3	1220.00	0.00	0.00	940.6
1221.00	0.00	0.00	950.2	1221.20	0.00	0.00	956.2	1221.00	0.00	0.00	960.4
1220.99	0.00	0.00	961.5	1221.00	0.00	0.00	961.7	1221.64	0.00	0.00	964.2
1221.64	0.00	0.00	981.9	1221.64	0.00	0.00	999.7	1221.65	0.00	0.00	1017.4
1221.65	0.00	0.00	1035.2	1221.65	0.00	0.00	1052.9				

ID
8 SECTION 818.00 TIME = 19.10 HRS WS =1217.60 WIDTH = 294.5

Z	DZ	TDZ	Y	Z	DZ	TDZ	Y	Z	DZ	TDZ	Y
1225.10	0.00	0.00	0.0	1225.00	0.00	0.00	1.0	1224.00	0.00	0.00	4.1
1223.00	0.00	0.00	7.2	1222.00	0.00	0.00	10.4	1221.00	0.00	0.00	13.5
1220.92	0.00	0.00	13.8	1220.00	0.00	0.00	22.3	1219.00	0.00	0.00	24.3
1218.00	0.00	0.00	26.3	1216.65	0.01	-0.35	30.9	1216.53	0.01	-0.38	33.6
1216.53	0.01	-0.47	35.3	1216.53	0.01	-0.67	37.1	1216.53	0.01	-0.47	38.7
1216.53	0.01	-0.37	42.4	1216.53	0.01	-0.47	45.2	1216.60	0.01	-0.80	50.7
1216.53	0.01	-0.47	57.0	1216.53	0.01	-0.11	58.5	1216.52	0.01	-0.48	62.0
1216.52	0.01	-0.48	71.0	1216.52	0.01	0.52	72.7	1216.52	0.01	1.52	74.7
1215.59	0.01	1.45	94.4	1215.29	0.01	1.00	112.1	1215.32	0.01	0.88	129.9
1215.41	0.01	0.81	147.7	1215.69	0.01	0.69	157.7	1215.67	0.01	0.27	161.5
1215.06	0.01	0.06	166.1	1214.03	0.02	0.03	167.6	1212.94	0.02	-0.56	175.0
1213.63	0.02	-0.37	189.1	1215.24	0.01	0.74	202.3	1215.16	0.01	0.16	216.1
1216.20	0.01	0.20	230.8	1216.20	0.01	0.17	233.3	1216.20	0.01	0.20	237.4
1215.98	0.01	0.44	251.7	1215.94	0.01	0.85	266.0	1216.21	0.01	1.09	273.7
1216.21	0.01	0.21	287.7	1216.21	0.01	-0.29	298.9	1216.23	0.01	-0.76	310.6
1218.00	0.00	0.00	325.5	1219.00	0.00	0.00	329.8	1219.18	0.00	0.00	330.5
1220.00	0.00	0.00	333.8	1221.00	0.00	0.00	336.8	1221.20	0.00	0.00	338.3
1221.18	0.00	0.00	357.7	1221.17	0.00	0.00	377.2	1221.15	0.00	0.00	396.6
1221.14	0.00	0.00	416.1	1221.12	0.00	0.00	435.5				

ID
7 SECTION 611.00 TIME = 19.10 HRS WS =1215.80 WIDTH = 336.1

Z	DZ	TDZ	Y	Z	DZ	TDZ	Y	Z	DZ	TDZ	Y
1224.70	0.00	0.00	267.9	1224.49	0.00	0.00	285.2	1224.48	0.00	0.00	287.4
1224.00	0.00	0.00	288.8	1223.00	0.00	0.00	292.0	1222.00	0.00	0.00	295.2
1221.00	0.00	0.00	298.5	1220.00	0.00	0.00	301.7	1218.79	0.00	-0.21	304.9
1218.37	0.00	0.09	305.5	1218.30	0.00	0.00	313.7	1217.69	-0.01	-0.31	315.3
1216.55	0.02	-0.45	316.9	1215.79	0.01	-0.21	317.9	1215.49	0.00	0.49	320.8
1214.83	0.00	0.13	326.2	1214.83	0.00	-0.17	333.5	1214.96	0.00	-0.35	341.3
1215.02	0.00	-0.39	354.9	1215.43	0.00	-0.09	368.4	1214.82	0.00	-0.18	386.5
1214.26	-0.01	0.26	394.2	1214.52	0.00	1.02	403.2	1214.51	-0.01	1.51	407.7
1214.15	-0.01	1.65	425.2	1213.86	-0.01	1.86	442.8	1213.93	-0.01	1.72	451.1
1213.70	-0.01	1.71	456.8	1213.20	-0.01	1.64	461.5	1213.62	-0.01	1.62	467.2
1213.60	-0.01	1.60	469.0	1212.96	-0.02	1.48	472.6	1213.55	-0.01	1.55	474.8
1213.51	-0.01	1.46	485.3	1213.41	-0.01	1.41	489.3	1212.46	-0.02	0.96	500.8
1210.63	-0.03	-0.37	512.2	1210.57	-0.03	-0.24	515.8	1210.72	-0.03	-0.27	523.7
1213.28	-0.01	1.28	539.8	1214.12	-0.01	1.12	543.4	1214.13	-0.01	0.12	547.1
1214.39	-0.01	-0.11	562.4	1214.95	0.00	-0.05	577.6	1214.95	0.00	-0.35	585.9
1214.96	0.00	-0.04	597.7	1214.45	-0.01	-0.05	612.2	1214.25	-0.01	0.25	626.7
1214.27	-0.01	0.47	635.3	1214.31	-0.01	0.31	644.7	1214.96	0.00	-0.04	647.1
1215.17	0.00	0.03	650.2	1215.66	0.00	-0.34	653.7	1217.00	0.00	0.00	656.5
1218.00	0.00	0.00	659.5	1219.00	0.00	0.00	662.5	1220.00	0.00	0.00	666.2
1220.10	0.00	0.00	666.7	1220.00	0.00	0.00	685.5	1220.00	0.00	0.00	693.9
1219.90	0.00	0.00	707.4	1219.88	0.00	0.00	725.3	1219.85	0.00	0.00	743.2
1219.82	0.00	0.00	761.2	1219.80	0.00	0.00	779.1	1219.83	0.00	0.00	798.7
1219.87	0.00	0.00	818.3	1219.90	0.00	0.00	837.9	1219.93	0.00	0.00	857.5
1219.97	0.00	0.00	877.2	1220.00	0.00	0.00	896.8				

ID
6 SECTION 424.00 TIME = 19.10 HRS WS =1214.40 WIDTH = 171.9

Z	DZ	TDZ	Y	Z	DZ	TDZ	Y	Z	DZ	TDZ	Y

1224.00	0.00	0.00	163.6	1224.00	0.00	0.00	163.8	1224.00	0.00	0.00	166.8
1224.00	0.00	0.00	167.0	1224.00	0.00	0.00	183.1	1224.00	0.00	0.00	183.3
1224.00	0.00	0.00	198.0	1224.00	0.00	0.00	198.2	1224.00	0.00	0.00	207.4
1224.00	0.00	0.00	207.6	1224.00	0.00	0.00	208.7	1224.00	0.00	0.00	208.9
1221.00	0.00	0.00	209.6	1220.50	0.00	0.00	222.8	1220.00	0.00	0.00	236.0
1219.00	0.00	0.00	245.1	1218.10	0.00	0.00	251.6	1218.00	0.00	0.00	253.5
1218.00	0.00	0.00	271.0	1218.00	0.00	0.00	288.4	1218.00	0.00	0.00	290.5
1217.67	0.00	0.00	308.0	1217.33	0.00	0.00	325.6	1217.00	0.00	0.00	343.2
1217.00	0.00	0.00	361.2	1217.00	0.00	0.00	366.5	1216.00	0.00	0.00	383.7
1215.00	0.00	0.00	386.9	1214.40	0.03	0.31	396.3	1214.26	0.01	0.06	399.6
1214.23	0.01	0.23	405.5	1214.17	0.01	1.17	418.4	1214.11	0.01	2.11	428.8
1213.89	0.02	2.89	434.2	1212.52	0.03	2.02	446.2	1211.82	0.04	1.82	458.8
1211.65	0.04	1.75	459.1	1211.07	0.04	1.07	466.8	1211.50	0.04	0.86	477.1
1210.34	0.05	0.34	485.4	1209.55	0.05	-0.45	500.7	1209.10	0.05	-0.90	516.0
1209.10	0.05	-0.90	523.6	1209.10	0.05	0.10	525.1	1209.09	0.05	0.29	526.7
1209.09	0.05	0.28	541.4	1209.09	0.05	0.28	556.2	1209.09	0.05	0.09	557.2
1210.28	0.05	0.28	559.0	1211.99	0.04	0.99	561.3	1212.58	0.03	0.58	562.2
1214.16	0.01	1.16	564.7	1214.29	0.03	0.29	567.1	1215.00	0.00	0.00	569.9
1216.00	0.00	0.00	572.8	1216.60	0.00	0.00	580.0	1216.53	0.00	0.00	586.0
1224.00	0.00	0.00	601.0								

ID
5 SECTION 398.00 TIME = 19.10 HRS WS =1213.70 WIDTH = 88.3

Z	DZ	TDZ	Y	Z	DZ	TDZ	Y	Z	DZ	TDZ	Y
1220.20	0.00	0.00	4623.0	1220.40	0.00	0.00	4625.0	1220.20	0.00	0.00	4626.0
1220.30	0.00	0.00	4627.0	1220.00	0.00	0.00	4632.0	1219.90	0.00	0.00	4634.0
1218.80	0.00	0.00	4638.0	1218.80	0.00	0.00	4644.0	1218.60	0.00	0.00	4645.0
1218.70	0.00	0.00	4648.0	1218.10	0.00	0.00	4649.0	1217.80	0.00	0.00	4651.0
1218.20	0.00	0.00	4663.0	1218.10	0.00	0.00	4666.0	1217.70	0.00	0.00	4667.0
1217.90	0.00	0.00	4669.0	1218.00	0.00	0.00	4674.0	1217.90	0.00	0.00	4676.0
1217.50	0.00	0.00	4680.0	1217.30	0.00	0.00	4681.0	1217.50	0.00	0.00	4683.0
1217.50	0.00	0.00	4687.0	1217.80	0.00	0.00	4690.0	1217.90	0.00	0.00	4694.0
1217.70	0.00	0.00	4695.0	1217.80	0.00	0.00	4697.0	1217.90	0.00	0.00	4700.0
1218.20	0.00	0.00	4702.0	1218.30	0.00	0.00	4703.0	1218.20	0.00	0.00	4705.0
1217.90	0.00	0.00	4709.0	1218.20	0.00	0.00	4712.0	1218.20	0.00	0.00	4715.0
1218.40	0.00	0.00	4718.0	1218.00	0.00	0.00	4721.0	1218.10	0.00	0.00	4728.0
1218.50	0.00	0.00	4732.0	1218.50	0.00	0.00	4733.0	1217.90	0.00	0.00	4736.0
1217.90	0.00	0.00	4738.0	1217.80	0.00	0.00	4739.0	1218.00	0.00	0.00	4741.0
1218.20	0.00	0.00	4743.0	1218.30	0.00	0.00	4750.0	1218.00	0.00	0.00	4752.0
1218.30	0.00	0.00	4755.0	1218.10	0.00	0.00	4758.0	1217.80	0.00	0.00	4759.0
1218.30	0.00	0.00	4763.0	1218.60	0.00	0.00	4764.0	1218.70	0.00	0.00	4766.0
1218.20	0.00	0.00	4767.0	1218.00	0.00	0.00	4769.0	1218.10	0.00	0.00	4770.0
1218.00	0.00	0.00	4777.0	1218.40	0.00	0.00	4780.0	1218.10	0.00	0.00	4781.0
1217.80	0.00	0.00	4784.0	1218.00	0.00	0.00	4786.0	1218.10	0.00	0.00	4788.0
1217.90	0.00	0.00	4792.0	1218.10	0.00	0.00	4794.0	1218.10	0.00	0.00	4795.0
1218.20	0.00	0.00	4800.0	1217.90	0.00	0.00	4807.0	1218.00	0.00	0.00	4812.0
1217.60	0.00	0.00	4819.0	1217.90	0.00	0.00	4824.0	1217.90	0.00	0.00	4825.0
1217.80	0.00	0.00	4827.0	1217.80	0.00	0.00	4831.0	1217.90	0.00	0.00	4832.0
1217.80	0.00	0.00	4835.0	1217.60	0.00	0.00	4838.0	1218.00	0.00	0.00	4842.0
1218.00	0.00	0.00	4843.0	1217.90	0.00	0.00	4844.0	1218.00	0.00	0.00	4857.0
1218.00	0.00	0.00	4858.0	1218.00	0.00	0.00	4858.2	1217.40	0.00	0.00	4868.0
1217.60	0.00	0.00	4870.0	1217.20	0.00	0.00	4873.0	1217.20	0.00	0.00	4874.0
1217.50	0.00	0.00	4878.0	1217.30	0.00	0.00	4879.0	1217.10	0.00	0.00	4881.0
1217.30	0.00	0.00	4882.0	1217.80	0.00	0.00	4886.0	1217.60	0.00	0.00	4889.0
1217.80	0.00	0.00	4892.0	1217.90	0.00	0.00	4896.0	1217.50	0.00	0.00	4900.0
1218.20	0.00	0.00	4902.0	1217.90	0.00	0.00	4905.0	1217.70	0.00	0.00	4909.0
1218.20	0.00	0.00	4917.0	1218.20	0.00	0.00	4921.0	1217.80	0.00	0.00	4927.0
1217.80	0.00	0.00	4932.0	1217.80	0.00	0.00	4933.0	1217.80	0.00	0.00	4934.0
1215.40	0.00	0.00	4940.0	1211.60	0.00	0.00	4944.7	1210.80	0.00	0.00	4944.9
1208.28	-0.05	-3.02	4948.0	1208.27	-0.05	-3.03	4949.0	1208.25	-0.06	-2.95	4951.8
1208.25	-0.06	-2.85	4952.8	1208.22	-0.06	-1.48	4956.2	1208.16	-0.07	-1.84	4965.0
1208.13	-0.07	-1.97	4969.0	1208.09	-0.08	-1.41	4974.0	1208.08	-0.08	-1.42	4978.0
1208.08	-0.08	-1.42	4979.0	1208.08	-0.09	-1.62	4982.0	1208.07	-0.09	-1.53	4986.0
1208.07	-0.09	-1.63	4988.0	1208.07	-0.09	-1.43	4990.0	1208.06	-0.10	-1.74	4993.0
1208.06	-0.10	-1.64	4994.0	1208.06	-0.10	-1.64	4995.0	1208.06	-0.10	-1.44	4999.0
1208.06	-0.10	-1.14	5001.0	1208.05	-0.11	-0.85	5004.0	1208.06	-0.10	-1.04	5009.0
1208.06	-0.10	-1.34	5012.0	1208.06	-0.10	-1.14	5014.0	1208.07	-0.09	-1.03	5020.0
1210.19	0.00	-0.01	5024.5	1210.78	0.00	-0.02	5025.0	1210.80	0.00	0.00	5025.2

1214.00	0.00	0.00	5031.0	1216.50	0.00	0.00	5038.0	1216.90	0.00	0.00	5040.0
1216.70	0.00	0.00	5042.0	1216.40	0.00	0.00	5048.0	1216.50	0.00	0.00	5049.0
1216.70	0.00	0.00	5050.0	1216.70	0.00	0.00	5054.0	1216.40	0.00	0.00	5059.0
1216.60	0.00	0.00	5060.0	1216.40	0.00	0.00	5062.0	1216.60	0.00	0.00	5064.0
1216.90	0.00	0.00	5067.0	1216.40	0.00	0.00	5075.0	1216.60	0.00	0.00	5078.0
1216.60	0.00	0.00	5079.0	1216.70	0.00	0.00	5081.0	1216.40	0.00	0.00	5085.0
1216.00	0.00	0.00	5089.0	1215.80	0.00	0.00	5097.0	1216.10	0.00	0.00	5099.0
1216.20	0.00	0.00	5102.0	1216.20	0.00	0.00	5107.6	1226.20	0.00	0.00	5127.6

ID
4 SECTION 352.00 TIME = 19.10 HRS WS =1213.54 WIDTH = 91.1

Z	DZ	TDZ	Y	Z	DZ	TDZ	Y	Z	DZ	TDZ	Y
1220.40	0.00	0.00	4618.0	1220.70	0.00	0.00	4623.0	1220.30	0.00	0.00	4626.0
1220.40	0.00	0.00	4628.0	1220.40	0.00	0.00	4630.0	1220.60	0.00	0.00	4631.0
1220.60	0.00	0.00	4635.0	1219.90	0.00	0.00	4637.0	1219.90	0.00	0.00	4638.0
1219.80	0.00	0.00	4641.0	1219.90	0.00	0.00	4644.0	1219.80	0.00	0.00	4645.0
1219.90	0.00	0.00	4646.0	1220.50	0.00	0.00	4647.0	1220.40	0.00	0.00	4648.0
1220.20	0.00	0.00	4652.0	1220.30	0.00	0.00	4653.0	1220.10	0.00	0.00	4654.0
1220.10	0.00	0.00	4658.0	1220.60	0.00	0.00	4659.0	1220.40	0.00	0.00	4661.0
1220.50	0.00	0.00	4662.0	1219.90	0.00	0.00	4664.0	1220.40	0.00	0.00	4669.0
1220.00	0.00	0.00	4673.0	1220.30	0.00	0.00	4678.0	1220.00	0.00	0.00	4683.0
1220.10	0.00	0.00	4684.0	1219.70	0.00	0.00	4688.0	1220.00	0.00	0.00	4690.0
1220.10	0.00	0.00	4691.0	1220.00	0.00	0.00	4693.0	1220.00	0.00	0.00	4695.0
1220.20	0.00	0.00	4696.0	1220.20	0.00	0.00	4697.0	1220.00	0.00	0.00	4698.0
1219.80	0.00	0.00	4704.0	1220.10	0.00	0.00	4711.0	1220.20	0.00	0.00	4713.0
1220.20	0.00	0.00	4714.0	1219.60	0.00	0.00	4719.0	1220.00	0.00	0.00	4727.0
1219.90	0.00	0.00	4728.0	1219.60	0.00	0.00	4730.0	1219.40	0.00	0.00	4731.0
1219.30	0.00	0.00	4733.0	1219.50	0.00	0.00	4738.0	1219.90	0.00	0.00	4741.0
1219.80	0.00	0.00	4744.0	1219.60	0.00	0.00	4746.0	1219.80	0.00	0.00	4748.0
1219.80	0.00	0.00	4751.0	1219.70	0.00	0.00	4753.0	1219.90	0.00	0.00	4759.0
1219.40	0.00	0.00	4762.0	1219.40	0.00	0.00	4763.0	1219.50	0.00	0.00	4770.0
1219.80	0.00	0.00	4773.0	1219.70	0.00	0.00	4774.0	1219.50	0.00	0.00	4776.0
1219.50	0.00	0.00	4778.0	1219.00	0.00	0.00	4781.0	1219.20	0.00	0.00	4783.0
1219.20	0.00	0.00	4785.0	1219.50	0.00	0.00	4789.0	1219.50	0.00	0.00	4790.0
1219.10	0.00	0.00	4793.0	1219.00	0.00	0.00	4797.0	1218.80	0.00	0.00	4799.0
1219.30	0.00	0.00	4803.0	1219.20	0.00	0.00	4804.0	1219.40	0.00	0.00	4805.0
1219.40	0.00	0.00	4807.0	1219.30	0.00	0.00	4808.0	1218.80	0.00	0.00	4815.0
1218.80	0.00	0.00	4816.0	1219.30	0.00	0.00	4822.0	1219.20	0.00	0.00	4824.0
1219.20	0.00	0.00	4826.0	1219.00	0.00	0.00	4830.0	1218.70	0.00	0.00	4832.0
1218.70	0.00	0.00	4833.0	1218.90	0.00	0.00	4840.0	1218.80	0.00	0.00	4843.0
1218.60	0.00	0.00	4845.0	1218.80	0.00	0.00	4847.0	1218.40	0.00	0.00	4851.0
1218.60	0.00	0.00	4853.0	1218.60	0.00	0.00	4859.0	1218.10	0.00	0.00	4865.0
1218.20	0.00	0.00	4866.0	1218.20	0.00	0.00	4867.0	1218.70	0.00	0.00	4873.0
1218.70	0.00	0.00	4876.0	1218.20	0.00	0.00	4881.0	1218.70	0.00	0.00	4890.0
1218.60	0.00	0.00	4893.0	1218.30	0.00	0.00	4896.0	1218.60	0.00	0.00	4898.0
1218.20	0.00	0.00	4901.0	1218.30	0.00	0.00	4907.0	1218.10	0.00	0.00	4909.0
1218.10	0.00	0.00	4911.0	1217.90	0.00	0.00	4912.0	1217.90	0.00	0.00	4916.0
1216.80	0.00	0.00	4922.0	1216.30	0.00	0.00	4929.0	1214.50	0.00	0.00	4932.0
1213.50	0.00	0.00	4939.0	1213.42	0.00	0.52	4940.3	1210.98	-0.09	0.18	4944.8
1210.84	0.06	0.04	4945.0	1210.16	0.00	-0.04	4951.9	1207.44	0.18	-3.36	4956.0
1207.44	0.18	-3.06	4957.0	1207.44	0.18	-1.96	4964.2	1207.44	0.18	-1.76	4969.0
1207.44	0.18	-1.86	4973.0	1207.44	0.18	-1.16	4979.0	1207.44	0.18	-1.36	4981.0
1207.44	0.18	-1.76	4988.0	1207.44	0.18	-1.46	4991.0	1207.44	0.18	-1.16	4994.0
1207.44	0.18	-1.26	4998.0	1207.44	0.18	-1.16	4999.0	1207.44	0.18	-1.46	5000.0
1207.44	0.18	-1.46	5002.0	1207.44	0.18	-0.96	5008.0	1207.44	0.18	-1.36	5015.0
1207.44	0.18	-1.86	5019.0	1207.44	0.18	-1.86	5021.0	1207.44	0.18	-2.16	5021.9
1211.88	0.00	-0.02	5024.2	1212.50	-0.02	0.00	5025.8	1215.10	0.00	0.00	5036.0
1215.50	0.00	0.00	5038.0	1215.50	0.00	0.00	5039.0	1216.00	0.00	0.00	5040.0
1216.30	0.00	0.00	5046.0	1216.30	0.00	0.00	5047.0	1216.30	0.00	0.00	5048.0
1216.60	0.00	0.00	5050.0	1215.40	0.00	0.00	5054.0	1215.50	0.00	0.00	5055.0
1215.70	0.00	0.00	5056.0	1216.00	0.00	0.00	5058.0	1216.80	0.00	0.00	5061.0
1216.70	0.00	0.00	5064.0	1217.30	0.00	0.00	5066.0	1217.30	0.00	0.00	5067.0
1217.30	0.00	0.00	5072.0	1217.10	0.00	0.00	5076.0				

ID
3 SECTION 339.00 TIME = 19.10 HRS WS =1213.20 WIDTH = 98.2

Z	DZ	TDZ	Y	Z	DZ	TDZ	Y	Z	DZ	TDZ	Y

1220.90	0.00	0.00	4621.0	1220.90	0.00	0.00	4622.0	1220.10	0.00	0.00	4634.0
1220.10	0.00	0.00	4635.0	1220.80	0.00	0.00	4640.0	1220.80	0.00	0.00	4643.0
1220.60	0.00	0.00	4646.0	1220.30	0.00	0.00	4647.0	1220.60	0.00	0.00	4649.0
1220.70	0.00	0.00	4652.0	1220.30	0.00	0.00	4656.0	1220.70	0.00	0.00	4657.0
1220.40	0.00	0.00	4662.0	1220.70	0.00	0.00	4667.0	1220.30	0.00	0.00	4668.0
1220.40	0.00	0.00	4672.0	1219.90	0.00	0.00	4676.0	1220.00	0.00	0.00	4677.0
1220.00	0.00	0.00	4677.2	1220.40	0.00	0.00	4681.0	1219.80	0.00	0.00	4686.0
1220.40	0.00	0.00	4690.0	1220.20	0.00	0.00	4694.0	1220.30	0.00	0.00	4695.0
1220.40	0.00	0.00	4698.0	1219.90	0.00	0.00	4702.0	1219.60	0.00	0.00	4703.0
1219.80	0.00	0.00	4704.0	1220.20	0.00	0.00	4706.0	1220.00	0.00	0.00	4707.0
1220.00	0.00	0.00	4709.0	1219.80	0.00	0.00	4710.0	1219.70	0.00	0.00	4713.0
1220.20	0.00	0.00	4715.0	1219.90	0.00	0.00	4718.0	1219.75	0.00	0.00	4731.5
1219.60	0.00	0.00	4745.0	1220.10	0.00	0.00	4748.0	1219.90	0.00	0.00	4749.0
1220.10	0.00	0.00	4751.0	1220.00	0.00	0.00	4756.0	1219.40	0.00	0.00	4762.0
1220.00	0.00	0.00	4767.0	1219.80	0.00	0.00	4769.0	1220.00	0.00	0.00	4770.0
1219.70	0.00	0.00	4776.0	1220.00	0.00	0.00	4781.0	1219.90	0.00	0.00	4782.0
1220.00	0.00	0.00	4784.0	1219.70	0.00	0.00	4790.0	1220.10	0.00	0.00	4795.0
1220.00	0.00	0.00	4796.0	1219.60	0.00	0.00	4798.0	1219.90	0.00	0.00	4801.0
1219.70	0.00	0.00	4809.0	1219.40	0.00	0.00	4815.0	1220.00	0.00	0.00	4819.0
1219.50	0.00	0.00	4827.0	1219.80	0.00	0.00	4831.0	1219.30	0.00	0.00	4834.0
1219.80	0.00	0.00	4836.0	1219.10	0.00	0.00	4844.0	1219.20	0.00	0.00	4845.0
1218.90	0.00	0.00	4850.0	1219.60	0.00	0.00	4855.0	1218.80	0.00	0.00	4862.0
1219.30	0.00	0.00	4866.0	1219.30	0.00	0.00	4867.0	1219.50	0.00	0.00	4869.0
1219.20	0.00	0.00	4877.0	1219.00	0.00	0.00	4882.0	1219.40	0.00	0.00	4885.0
1219.30	0.00	0.00	4888.0	1218.80	0.00	0.00	4893.0	1219.00	0.00	0.00	4898.0
1218.80	0.00	0.00	4899.0	1219.00	0.00	0.00	4903.0	1218.70	0.00	0.00	4904.0
1218.50	0.00	0.00	4909.0	1218.20	0.00	0.00	4911.0	1218.30	0.00	0.00	4916.0
1217.80	0.00	0.00	4921.0	1216.30	0.00	0.00	4927.0	1216.20	0.00	0.00	4928.0
1216.30	0.00	0.00	4930.0	1215.90	0.00	0.00	4931.0	1214.80	0.00	0.00	4934.0
1214.40	0.00	0.00	4936.0	1213.04	0.04	0.04	4939.0	1212.18	-0.01	0.48	4942.5
1212.10	-0.01	0.60	4943.1	1210.70	-0.02	0.00	4948.1	1207.86	-0.06	-1.84	4958.2
1207.86	-0.06	-1.84	4961.2	1207.85	-0.07	-1.35	4967.0	1207.85	-0.07	-0.55	4970.0
1207.84	-0.08	-1.06	4975.0	1207.84	-0.08	-1.06	4976.0	1207.84	-0.08	-1.06	4978.0
1207.84	-0.08	-1.06	4980.0	1207.83	-0.09	-0.77	4982.0	1207.83	-0.09	-0.67	4986.0
1207.83	-0.09	-0.87	4988.0	1207.82	-0.10	-0.88	4994.0	1207.82	-0.10	-1.08	4997.0
1207.82	-0.10	-1.08	4998.0	1207.81	-0.11	-0.79	5003.0	1207.81	-0.11	-0.59	5007.0
1207.81	-0.11	-0.79	5009.0	1207.82	-0.10	-0.88	5010.0	1207.82	-0.10	-0.88	5019.0
1207.83	-0.09	-1.57	5023.8	1207.84	-0.08	-1.86	5028.7	1209.90	-0.02	0.00	5029.8
1210.00	-0.02	0.00	5030.2	1209.90	-0.02	0.00	5030.4	1210.20	-0.02	0.00	5030.6
1212.52	0.02	0.02	5035.0	1214.10	0.00	0.00	5039.0	1215.60	0.00	0.00	5046.0
1215.40	0.00	0.00	5047.0	1216.60	0.00	0.00	5055.0	1217.20	0.00	0.00	5058.0
1217.20	0.00	0.00	5062.0	1217.60	0.00	0.00	5072.0	1217.40	0.00	0.00	5074.0
1217.50	0.00	0.00	5076.0	1217.80	0.00	0.00	5078.0				

ID
2 SECTION 218.00 TIME = 19.10 HRS WS =1212.32 WIDTH = 103.1

Z	DZ	TDZ	Y	Z	DZ	TDZ	Y	Z	DZ	TDZ	Y
1221.30	0.00	0.00	4621.0	1221.10	0.00	0.00	4623.0	1221.00	0.00	0.00	4624.0
1221.00	0.00	0.00	4625.0	1220.90	0.00	0.00	4631.0	1221.00	0.00	0.00	4632.0
1221.30	0.00	0.00	4634.0	1221.20	0.00	0.00	4636.0	1221.40	0.00	0.00	4638.0
1220.90	0.00	0.00	4643.0	1221.30	0.00	0.00	4647.0	1220.80	0.00	0.00	4657.0
1220.80	0.00	0.00	4658.0	1221.30	0.00	0.00	4664.0	1220.70	0.00	0.00	4674.0
1220.90	0.00	0.00	4675.0	1221.20	0.00	0.00	4680.0	1221.20	0.00	0.00	4683.0
1220.40	0.00	0.00	4690.0	1220.70	0.00	0.00	4692.0	1220.90	0.00	0.00	4697.0
1220.80	0.00	0.00	4699.0	1220.80	0.00	0.00	4700.0	1220.40	0.00	0.00	4707.0
1220.80	0.00	0.00	4712.0	1220.90	0.00	0.00	4718.0	1220.40	0.00	0.00	4723.0
1220.80	0.00	0.00	4729.0	1220.90	0.00	0.00	4731.0	1220.70	0.00	0.00	4733.0
1220.80	0.00	0.00	4734.0	1220.20	0.00	0.00	4739.0	1220.60	0.00	0.00	4745.0
1220.50	0.00	0.00	4750.0	1220.70	0.00	0.00	4751.0	1220.20	0.00	0.00	4754.0
1220.60	0.00	0.00	4762.0	1220.20	0.00	0.00	4766.0	1220.20	0.00	0.00	4768.0
1220.10	0.00	0.00	4769.0	1220.00	0.00	0.00	4773.0	1220.70	0.00	0.00	4777.0
1220.00	0.00	0.00	4784.0	1220.10	0.00	0.00	4786.0	1220.40	0.00	0.00	4787.0
1219.90	0.00	0.00	4789.0	1220.40	0.00	0.00	4792.0	1219.90	0.00	0.00	4802.0
1219.90	0.00	0.00	4804.0	1220.50	0.00	0.00	4807.0	1220.20	0.00	0.00	4810.0
1220.10	0.00	0.00	4812.0	1219.80	0.00	0.00	4815.0	1220.10	0.00	0.00	4818.0
1220.00	0.00	0.00	4819.0	1220.20	0.00	0.00	4821.0	1220.40	0.00	0.00	4822.0
1219.20	0.00	0.00	4826.0	1219.90	0.00	0.00	4837.0	1219.20	0.00	0.00	4845.0
1219.30	0.00	0.00	4846.0	1219.70	0.00	0.00	4852.0	1219.90	0.00	0.00	4853.0
1219.50	0.00	0.00	4854.0	1219.30	0.00	0.00	4855.0	1219.40	0.00	0.00	4863.0

1219.20	0.00	0.00	4865.0	1219.10	0.00	0.00	4869.0	1219.10	0.00	0.00	4870.0
1218.70	0.00	0.00	4874.0	1218.80	0.00	0.00	4881.0	1219.20	0.00	0.00	4882.0
1219.20	0.00	0.00	4901.5	1219.20	0.00	0.00	4921.0	1217.50	0.00	0.00	4936.0
1216.70	0.00	0.00	4940.0	1215.40	0.00	0.00	4943.0	1214.70	0.00	0.00	4943.2
1214.10	0.00	0.00	4945.0	1210.74	-0.10	0.25	4956.0	1210.26	0.00	0.16	4957.0
1210.11	0.00	0.41	4957.2	1206.84	0.00	-1.06	4974.4	1206.83	0.01	-0.57	4978.0
1206.83	0.03	-0.27	4981.0	1206.83	0.07	-0.27	4986.0	1206.83	0.08	-0.47	4987.0
1206.83	0.09	-0.57	4989.0	1206.83	0.13	-0.27	4995.0	1206.83	0.15	-0.27	4998.0
1206.83	0.17	-0.17	5001.0	1206.83	0.15	-0.67	5004.0	1206.83	0.13	-0.57	5007.0
1206.83	0.11	-0.28	5010.0	1206.83	0.10	-0.27	5012.0	1206.83	0.07	-1.17	5016.0
1206.83	0.06	-0.87	5017.0	1207.68	0.00	-0.92	5036.0	1208.24	0.00	0.04	5046.5
1211.13	-0.10	0.73	5050.8	1212.60	0.00	0.00	5055.0	1215.30	0.00	0.00	5064.0
1216.90	0.00	0.00	5072.0	1217.00	0.00	0.00	5072.2	1217.00	0.00	0.00	5074.0
1217.40	0.00	0.00	5079.0	1217.20	0.00	0.00	5080.0	1217.30	0.00	0.00	5083.0
1217.10	0.00	0.00	5086.0	1217.30	0.00	0.00	5087.0	1217.20	0.00	0.00	5090.0
1217.60	0.00	0.00	5093.0	1217.90	0.00	0.00	5095.0	1217.90	0.00	0.00	5096.0
1217.40	0.00	0.00	5099.0	1217.70	0.00	0.00	5104.0	1217.50	0.00	0.00	5105.0
1217.80	0.00	0.00	5110.0	1217.80	0.00	0.00	5111.0	1217.70	0.00	0.00	5119.0
1217.80	0.00	0.00	5121.0	1217.50	0.00	0.00	5124.0	1217.80	0.00	0.00	5128.0
1217.30	0.00	0.00	5137.0	1217.50	0.00	0.00	5138.0	1217.90	0.00	0.00	5149.0
1217.40	0.00	0.00	5154.0	1217.30	0.00	0.00	5160.0	1217.50	0.00	0.00	5166.0
1217.00	0.00	0.00	5169.0	1216.80	0.00	0.00	5180.0	1217.30	0.00	0.00	5185.0
1217.20	0.00	0.00	5191.0	1217.10	0.00	0.00	5192.0	1216.90	0.00	0.00	5197.0
1216.60	0.00	0.00	5199.0	1216.50	0.00	0.00	5200.0	1216.90	0.00	0.00	5203.0
1216.10	0.00	0.00	5209.0	1216.60	0.00	0.00	5222.0	1216.40	0.00	0.00	5223.0

TIME = 25.43 HRS DT = 30 SECS TIME STEP = 2550

SECTION	W.S.ELEV. FT	WIDTH FT	DEPTH FT	Q CFS	V FPS	SLOPE	D50 MM	QS/Q 1000 PPM	FR	SED. YIELD TONS
137.000	1207.81	74.5	1.81	348	4.21	0.011234	0.83	10.32	0.70	0.257E+05
218.000	1208.79	89.0	1.51	348	3.93	0.011358	0.78	9.31	0.69	0.275E+05
339.000	1210.11	77.5	1.36	348	4.12	0.011000	0.75	10.00	0.69	0.276E+05
352.000	1210.21	70.6	1.32	348	4.30	0.011282	0.70	10.98	0.71	0.277E+05
398.000	1210.31	76.3	1.15	348	4.38	0.013183	0.78	14.90	0.76	0.287E+05
424.000	1210.70	85.4	1.33	348	4.10	0.012294	0.93	11.50	0.72	0.287E+05
611.000	1212.87	92.0	1.39	348	3.97	0.012195	0.76	6.05	0.72	0.298E+05
818.000	1215.81	179.5	2.24	348	3.25	0.015285	1.02	19.67	0.74	0.317E+05
930.000	1216.91	98.1	2.83	348	4.68	0.023055	1.10	31.08	0.95	0.329E+05
1165.000	1220.05	243.6	2.04	348	2.16	0.005822	0.73	4.03	0.47	0.343E+05
1413.000	1222.32	65.2	1.61	348	5.13	0.018160	0.84	31.69	0.89	0.349E+05
1680.000	1226.49	94.2	2.00	348	3.93	0.012294	0.87	8.94	0.71	0.371E+05
1760.000	1227.33	135.0	2.51	348	3.05	0.008423	0.99	9.53	0.58	0.392E+05
1813.000	1227.79	71.9	1.23	348	4.81	0.016606	0.89	22.06	0.84	0.401E+05
1941.000	1229.68	123.9	1.80	348	3.20	0.008822	0.94	11.33	0.60	0.412E+05
2243.000	1233.09	91.4	1.02	348	4.26	0.015281	0.87	12.97	0.79	0.385E+05
2634.000	1237.61	86.3	1.34	348	3.62	0.008263	0.84	14.34	0.60	0.353E+05
2960.000	1240.98	77.5	1.30	348	4.52	0.014985	0.80	14.68	0.80	0.356E+05
3361.000	1245.74	71.4	1.29	348	4.00	0.009043	0.89	17.52	0.64	0.367E+05
3706.000	1249.81	64.2	1.14	348	5.01	0.016455	0.86	23.63	0.85	0.377E+05
3785.000	1251.00	56.5	1.30	348	4.77	0.012319	0.84	12.89	0.74	0.382E+05
3814.000	1251.41	60.7	1.88	348	3.83	0.006318	0.83	12.51	0.55	0.387E+05
3845.000	1251.70	129.4	2.10	348	3.45	0.012109	1.04	16.49	0.69	0.392E+05
3922.000	1252.20	109.3	1.80	348	4.34	0.021522	0.87	21.50	0.89	0.384E+05
4001.000	1253.44	91.3	1.61	348	3.82	0.010642	0.99	18.04	0.67	0.370E+05
4158.000	1255.47	71.7	1.70	348	4.97	0.018970	0.95	23.90	0.89	0.359E+05
4334.000	1258.14	93.9	1.46	348	3.60	0.009073	0.97	13.59	0.62	0.350E+05
4579.000	1261.33	119.4	1.70	348	4.14	0.019892	0.92	18.47	0.87	0.351E+05
4974.000	1266.97	118.6	1.69	348	3.34	0.009684	1.01	12.28	0.63	0.334E+05
5474.000	1273.29	95.4	1.40	348	4.29	0.016998	0.88	15.50	0.82	0.336E+05
5702.000	1276.34	87.9	1.57	348	3.70	0.009359	0.91	15.87	0.63	0.314E+05
5930.000	1279.54	162.5	2.22	348	3.71	0.021107	1.05	18.15	0.86	0.289E+05
6083.000	1281.88	143.4	2.22	348	3.30	0.012130	0.79	3.52	0.68	0.278E+05
6350.000	1285.38	113.9	1.62	348	3.74	0.013349	0.87	13.33	0.73	0.276E+05
6406.000	1286.15	120.3	2.07	348	2.98	0.006719	0.88	1.07	0.53	0.311E+05
6463.000	1286.25	120.1	1.81	348	3.48	0.011283	0.81	5.88	0.67	0.363E+05
6822.000	1290.60	118.8	0.85	348	3.67	0.013229	0.87	11.11	0.72	0.345E+05
7036.000	1293.43	151.4	1.91	348	3.28	0.012772	0.80	3.73	0.69	0.334E+05
7171.000	1295.43	169.3	1.82	348	3.51	0.018456	0.77	14.64	0.81	0.308E+05
7182.000	1295.65	231.4	2.30	348	2.68	0.011246	0.95	10.44	0.63	0.320E+05
7220.000	1295.75	100.2	1.40	348	4.22	0.016779	0.81	18.08	0.82	0.317E+05
7462.000	1299.25	220.1	1.86	348	2.72	0.010980	0.94	10.81	0.63	0.299E+05
7674.000	1302.15	193.6	0.76	348	3.31	0.017912	0.91	11.93	0.79	0.287E+05
7835.000	1304.30	124.9	1.03	348	3.32	0.010089	0.94	5.20	0.64	0.288E+05
7977.000	1305.84	138.2	1.65	348	3.19	0.010112	0.80	6.01	0.63	0.299E+05
8156.000	1307.97	127.0	1.91	348	3.46	0.012036	0.79	4.55	0.69	0.297E+05
8333.000	1310.27	103.6	1.64	348	4.14	0.017097	0.89	14.88	0.81	0.279E+05
8661.000	1314.33	95.5	1.92	348	3.48	0.008430	0.99	11.93	0.60	0.284E+05
9076.000	1319.51	97.0	1.68	348	4.48	0.019643	0.92	20.57	0.88	0.308E+05
9389.000	1323.71	93.5	2.31	348	3.53	0.008580	0.86	13.88	0.61	0.311E+05
9468.000	1324.81	213.2	3.23	348	3.22	0.018769	0.89	27.87	0.80	0.320E+05
9503.000	1325.11	86.4	2.28	348	5.02	0.024891	0.87	40.80	0.99	0.312E+05
9595.000	1325.41	109.1	1.57	348	4.23	0.019128	0.94	20.17	0.86	0.304E+05
9885.000	1330.29	133.3	1.62	348	3.52	0.013483	0.97	9.64	0.72	0.264E+05
10056.000	1332.95	92.5	1.86	348	4.32	0.016801	0.98	2.65	0.82	0.255E+05
10178.000	1334.45	177.8	2.92	348	3.85	0.027068	0.83	31.59	0.95	0.262E+05
10196.000	1334.89	231.9	3.78	348	2.21	0.006236	0.85	4.73	0.47	0.268E+05
10219.000	1334.99	179.2	2.01	348	2.60	0.007369	0.90	6.61	0.53	0.270E+05
10593.000	1340.20	111.0	1.75	348	4.56	0.025435	1.03	29.44	0.97	0.288E+05
10871.000	1344.49	147.7	1.93	348	2.90	0.008323	0.79	9.82	0.57	0.291E+05
10947.000	1345.24	188.1	2.31	348	2.96	0.011930	0.85	15.62	0.66	0.319E+05
11004.000	1345.44	115.7	2.34	348	4.12	0.019292	0.92	17.62	0.85	0.303E+05
11267.000	1348.52	73.8	1.49	348	3.67	0.007050	0.91	11.09	0.57	0.276E+05
11543.000	1351.32	77.6	1.33	348	4.56	0.015517	1.01	15.13	0.81	0.290E+05
11783.000	1354.48	78.6	1.34	348	4.16	0.011848	0.79	10.00	0.71	0.314E+05
12094.000	1358.35	70.3	1.18	348	4.52	0.013206	0.85	13.79	0.76	0.291E+05

12370.000	1362.05	87.5	1.00	348	4.14	0.013170	0.79	11.65	0.74	0.339E+05
12657.000	1366.22	107.4	1.58	348	4.03	0.016136	0.79	14.51	0.79	0.351E+05
12784.000	1368.23	122.0	1.88	348	3.81	0.015585	0.75	15.06	0.78	0.354E+05
12997.000	1371.49	140.3	1.81	348	3.54	0.014773	0.75	10.45	0.74	0.353E+05
13357.000	1374.99	149.4	2.72	348	3.61	0.017169	0.71	13.21	0.79	0.377E+05
13392.000	1375.89	162.9	1.91	348	3.73	0.021410	0.73	18.09	0.87	0.379E+05
13427.000	1376.09	116.2	1.69	348	4.28	0.021405	0.78	22.57	0.90	0.378E+05
13781.000	1379.79	55.7	1.79	348	5.61	0.019779	1.50	27.66	0.94	0.382E+05
14059.000	1383.81	91.9	1.67	348	3.56	0.008765	0.74	16.07	0.61	0.441E+05
14339.000	1386.76	59.0	1.54	348	4.81	0.013054	0.59	18.34	0.76	0.469E+05
14524.000	1389.05	50.5	2.17	348	5.09	0.012691	0.58	23.37	0.77	0.511E+05
14687.000	1390.90	57.2	3.40	348	4.29	0.008604	0.87	19.13	0.63	0.553E+05

ID
17 SECTION 2634.00 TIME = 25.43 HRS WS =1237.61 WIDTH = 86.3

Z	DZ	TDZ	Y	Z	DZ	TDZ	Y	Z	DZ	TDZ	Y
1243.90	0.00	0.00	4926.0	1243.90	0.00	0.00	4928.0	1244.20	0.00	0.00	4931.0
1243.90	0.00	0.00	4933.0	1243.60	0.00	0.00	4934.0	1243.10	0.00	0.00	4936.0
1240.35	0.00	-2.15	4940.0	1238.63	0.00	-1.87	4942.4	1238.61	0.00	-0.89	4945.7
1238.62	0.00	-0.88	4949.9	1238.62	0.00	-0.98	4952.0	1238.61	0.00	-0.99	4953.0
1238.62	0.00	-0.78	4954.9	1237.39	-0.01	-1.71	4957.3	1237.39	-0.01	-1.61	4957.9
1237.39	-0.01	-1.61	4959.1	1237.39	-0.01	-1.52	4961.2	1237.16	0.00	-1.64	4962.9
1237.11	0.00	-1.69	4964.8	1236.77	0.00	-1.53	4966.5	1236.58	0.00	-1.22	4968.5
1236.56	0.00	-0.64	4971.7	1236.54	0.00	-0.56	4973.9	1236.53	0.00	-0.57	4975.0
1236.51	0.00	-0.49	4978.0	1236.50	0.00	-0.50	4979.0	1236.49	0.00	-0.51	4980.5
1236.47	0.00	0.17	4983.2	1236.45	0.00	0.45	4986.7	1236.44	0.00	0.64	4988.0
1236.42	0.00	1.42	4991.1	1236.40	0.00	1.80	4993.0	1236.39	0.00	2.19	4996.0
1236.38	0.00	1.98	4999.0	1236.37	0.00	1.97	5001.0	1236.35	0.00	2.06	5004.0
1236.34	0.00	1.95	5006.0	1236.32	0.00	1.82	5011.0	1236.32	0.00	2.02	5012.0
1236.30	0.00	2.00	5016.0	1236.29	0.00	3.19	5017.0	1236.28	0.00	3.18	5026.0
1236.28	0.00	1.98	5027.1	1236.31	0.00	-0.98	5031.9	1236.33	0.00	-2.97	5034.9
1236.34	0.00	-3.96	5036.6	1236.45	0.00	-4.84	5041.6	1238.22	0.00	-4.18	5044.0
1239.50	0.00	-3.20	5045.8	1243.26	0.00	-1.84	5051.0	1243.99	0.00	-1.31	5052.0
1245.50	0.00	0.00	5058.0	1245.20	0.00	0.00	5060.0	1245.30	0.00	0.00	5061.0
1245.60	0.00	0.00	5064.0	1245.40	0.00	0.00	5065.0	1244.90	0.00	0.00	5066.0
1244.10	0.00	0.00	5071.0	1243.20	0.00	0.00	5075.0	1242.80	0.00	0.00	5077.0
1243.40	0.00	0.00	5081.0	1243.70	0.00	0.00	5085.0	1243.50	0.00	0.00	5088.0
1243.50	0.00	0.00	5091.0	1243.50	0.00	0.00	5092.0	1243.50	0.00	0.00	5093.0
1243.40	0.00	0.00	5097.0	1243.50	0.00	0.00	5098.0	1243.30	0.00	0.00	5100.0
1243.30	0.00	0.00	5103.0	1243.40	0.00	0.00	5105.0	1243.20	0.00	0.00	5106.0
1243.10	0.00	0.00	5107.0	1243.20	0.00	0.00	5113.0	1243.30	0.00	0.00	5118.0
1243.30	0.00	0.00	5121.0	1243.20	0.00	0.00	5128.0	1243.20	0.00	0.00	5129.0
1243.30	0.00	0.00	5132.0	1243.60	0.00	0.00	5135.0	1243.30	0.00	0.00	5138.0
1243.50	0.00	0.00	5142.0	1243.40	0.00	0.00	5144.0	1243.40	0.00	0.00	5146.0
1243.50	0.00	0.00	5149.0	1243.50	0.00	0.00	5151.0	1243.40	0.00	0.00	5155.0
1243.40	0.00	0.00	5157.0	1243.30	0.00	0.00	5159.0	1243.20	0.00	0.00	5163.0
1243.20	0.00	0.00	5165.0	1243.20	0.00	0.00	5166.0	1243.30	0.00	0.00	5170.0
1243.20	0.00	0.00	5171.0	1243.30	0.00	0.00	5172.0	1243.30	0.00	0.00	5174.0
1243.10	0.00	0.00	5180.0	1243.10	0.00	0.00	5181.0	1243.10	0.00	0.00	5183.0
1243.40	0.00	0.00	5187.0	1243.40	0.00	0.00	5188.0	1243.40	0.00	0.00	5191.0
1243.40	0.00	0.00	5193.0	1243.30	0.00	0.00	5195.0	1243.40	0.00	0.00	5197.0
1243.40	0.00	0.00	5198.0	1243.40	0.00	0.00	5201.0	1243.20	0.00	0.00	5204.0
1243.20	0.00	0.00	5205.0	1243.20	0.00	0.00	5208.0	1243.30	0.00	0.00	5211.0
1243.30	0.00	0.00	5212.0	1243.30	0.00	0.00	5213.0	1243.30	0.00	0.00	5214.0
1243.20	0.00	0.00	5216.0	1243.10	0.00	0.00	5219.0	1243.10	0.00	0.00	5221.0
1243.00	0.00	0.00	5222.0	1243.00	0.00	0.00	5224.0	1243.10	0.00	0.00	5226.0
1243.70	0.00	0.00	5228.0	1243.90	0.00	0.00	5231.0	1243.50	0.00	0.00	5232.0
1243.90	0.00	0.00	5234.0	1243.90	0.00	0.00	5236.0	1243.90	0.00	0.00	5243.0
1244.00	0.00	0.00	5246.0	1243.60	0.00	0.00	5250.0	1243.10	0.00	0.00	5258.0
1243.60	0.00	0.00	5268.0	1243.60	0.00	0.00	5270.0	1243.40	0.00	0.00	5275.0
1243.70	0.00	0.00	5276.0	1243.80	0.00	0.00	5277.0	1243.70	0.00	0.00	5284.0
1243.70	0.00	0.00	5285.0	1244.10	0.00	0.00	5291.0	1244.10	0.00	0.00	5292.0
1244.10	0.00	0.00	5293.0	1244.00	0.00	0.00	5296.0	1243.70	0.00	0.00	5299.0
1243.70	0.00	0.00	5300.0	1243.70	0.00	0.00	5304.0	1243.80	0.00	0.00	5306.0
1244.00	0.00	0.00	5307.0	1243.90	0.00	0.00	5313.0	1243.80	0.00	0.00	5314.0
1243.80	0.00	0.00	5317.0	1244.00	0.00	0.00	5319.0	1244.10	0.00	0.00	5322.0
1243.80	0.00	0.00	5325.0	1243.90	0.00	0.00	5326.0	1244.10	0.00	0.00	5330.0
1243.90	0.00	0.00	5332.0	1243.80	0.00	0.00	5333.0	1243.90	0.00	0.00	5335.0
1244.10	0.00	0.00	5337.0	1244.00	0.00	0.00	5338.0	1244.00	0.00	0.00	5339.0
1243.90	0.00	0.00	5341.0	1243.90	0.00	0.00	5344.0	1243.80	0.00	0.00	5346.0
1243.70	0.00	0.00	5348.0	1244.10	0.00	0.00	5352.0	1244.10	0.00	0.00	5354.0
1244.20	0.00	0.00	5360.0	1244.20	0.00	0.00	5361.0	1244.30	0.00	0.00	5362.0
1244.40	0.00	0.00	5367.0	1244.40	0.00	0.00	5369.0	1244.30	0.00	0.00	5370.0
1244.30	0.00	0.00	5374.0	1244.30	0.00	0.00	5376.0	1244.30	0.00	0.00	5377.0
1244.30	0.00	0.00	5378.0	1244.40	0.00	0.00	5383.0	1244.60	0.00	0.00	5384.0
1244.70	0.00	0.00	5385.0	1244.50	0.00	0.00	5386.0	1244.60	0.00	0.00	5388.0
1245.20	0.00	0.00	5393.0	1245.60	0.00	0.00	5396.0	1246.30	0.00	0.00	5401.0
1246.40	0.00	0.00	5402.0	1247.60	0.00	0.00	5409.0	1247.70	0.00	0.00	5410.0
1248.50	0.00	0.00	5416.0	1249.30	0.00	0.00	5418.0	1250.30	0.00	0.00	5423.0
1250.70	0.00	0.00	5424.0	1250.70	0.00	0.00	5426.0	1252.00	0.00	0.00	5429.0
1252.20	0.00	0.00	5430.0	1253.80	0.00	0.00	5434.0	1254.10	0.00	0.00	5435.0

1254.30	0.00	0.00	5437.0

ID
16 SECTION 2243.00 TIME = 25.43 HRS WS =1233.09 WIDTH = 91.4

Z	DZ	TDZ	Y	Z	DZ	TDZ	Y	Z	DZ	TDZ	Y
1239.90	0.00	0.00	4939.0	1239.90	0.00	0.00	4941.0	1238.45	0.00	-1.55	4944.0
1236.99	0.00	-3.00	4946.0	1234.81	0.00	-4.59	4949.0	1234.66	0.00	-4.64	4949.2
1234.19	0.00	-4.91	4949.8	1232.08	0.00	-4.62	4958.6	1232.07	0.00	-3.93	4963.6
1232.07	0.00	-3.23	4966.2	1232.07	0.00	-2.83	4967.1	1232.07	0.00	-1.33	4969.4
1232.07	0.00	-0.13	4972.9	1232.07	0.00	-0.03	4975.0	1232.07	0.00	0.47	4977.0
1232.07	0.00	1.17	4982.0	1232.07	0.00	1.27	4984.0	1232.07	0.00	1.17	4985.0
1232.07	0.00	1.07	4990.0	1232.07	0.00	1.07	4992.0	1232.07	0.00	1.27	4995.0
1232.23	0.00	1.43	5004.0	1232.23	0.00	1.23	5005.0	1232.23	0.00	1.33	5007.0
1232.23	0.00	1.34	5008.0	1232.23	0.00	1.33	5010.0	1232.23	0.00	1.13	5013.0
1232.23	0.00	0.93	5014.0	1232.23	0.00	0.44	5017.0	1232.23	0.00	0.23	5017.8
1232.23	0.00	-0.46	5019.0	1232.23	0.00	-1.06	5020.5	1232.23	0.00	-1.76	5022.1
1232.23	0.00	-2.46	5025.2	1232.24	0.00	-2.86	5028.4	1232.23	0.00	-2.96	5029.8
1232.23	0.00	-2.96	5031.6	1232.23	0.00	-3.37	5036.3	1232.23	0.00	-3.57	5037.5
1232.24	0.00	-3.86	5038.8	1232.24	0.00	-4.15	5042.9	1234.17	0.00	-3.53	5049.6
1234.71	0.00	-4.59	5050.3	1235.22	0.00	-4.18	5051.0	1237.40	0.00	-2.40	5054.0
1239.58	0.00	-0.72	5057.0	1240.00	0.00	0.00	5060.0	1240.00	0.00	0.00	5061.0
1239.90	0.00	0.00	5062.0	1239.90	0.00	0.00	5063.0	1239.90	0.00	0.00	5065.0
1239.10	0.00	0.00	5069.0	1239.00	0.00	0.00	5069.2	1238.90	0.00	0.00	5070.0
1238.60	0.00	0.00	5073.0	1237.80	0.00	0.00	5078.0	1238.40	0.00	0.00	5086.0
1238.60	0.00	0.00	5091.0	1238.40	0.00	0.00	5094.0	1238.30	0.00	0.00	5098.0
1238.10	0.00	0.00	5102.0	1238.40	0.00	0.00	5105.0	1238.40	0.00	0.00	5106.0
1238.40	0.00	0.00	5110.0	1238.40	0.00	0.00	5112.0	1238.40	0.00	0.00	5113.0
1238.50	0.00	0.00	5119.0	1238.70	0.00	0.00	5124.0	1238.80	0.00	0.00	5125.0
1238.80	0.00	0.00	5126.0	1238.90	0.00	0.00	5131.0	1239.00	0.00	0.00	5132.0
1238.90	0.00	0.00	5133.0	1238.60	0.00	0.00	5135.0	1238.50	0.00	0.00	5137.0
1238.40	0.00	0.00	5140.0	1238.20	0.00	0.00	5143.0	1238.20	0.00	0.00	5145.0
1238.30	0.00	0.00	5148.0	1238.30	0.00	0.00	5151.0	1238.30	0.00	0.00	5152.0
1238.40	0.00	0.00	5153.0	1238.40	0.00	0.00	5156.0	1238.30	0.00	0.00	5159.0
1238.20	0.00	0.00	5163.0	1238.00	0.00	0.00	5168.0	1238.10	0.00	0.00	5171.0
1238.10	0.00	0.00	5175.0	1238.20	0.00	0.00	5180.0	1238.20	0.00	0.00	5182.0
1238.20	0.00	0.00	5186.0	1238.30	0.00	0.00	5189.0	1238.60	0.00	0.00	5191.0
1238.70	0.00	0.00	5194.0	1238.60	0.00	0.00	5196.0	1238.50	0.00	0.00	5198.0
1238.40	0.00	0.00	5199.0	1238.70	0.00	0.00	5202.0	1238.70	0.00	0.00	5203.0
1238.60	0.00	0.00	5205.0	1238.30	0.00	0.00	5207.0	1238.40	0.00	0.00	5210.0
1238.30	0.00	0.00	5211.0	1238.40	0.00	0.00	5215.0	1238.40	0.00	0.00	5216.0
1238.60	0.00	0.00	5219.0	1238.30	0.00	0.00	5223.0	1238.40	0.00	0.00	5226.0
1238.50	0.00	0.00	5230.0	1238.50	0.00	0.00	5231.0	1238.50	0.00	0.00	5232.0
1238.50	0.00	0.00	5238.0	1238.60	0.00	0.00	5241.0	1238.70	0.00	0.00	5245.0
1238.70	0.00	0.00	5246.0	1238.90	0.00	0.00	5248.0	1239.00	0.00	0.00	5253.0
1238.90	0.00	0.00	5254.0	1238.80	0.00	0.00	5257.0	1238.70	0.00	0.00	5259.0
1238.80	0.00	0.00	5260.0	1238.90	0.00	0.00	5261.0	1239.00	0.00	0.00	5265.0
1239.10	0.00	0.00	5267.0	1238.90	0.00	0.00	5269.0	1238.90	0.00	0.00	5270.0
1239.00	0.00	0.00	5274.0	1239.00	0.00	0.00	5275.0	1239.10	0.00	0.00	5279.0
1239.00	0.00	0.00	5282.0	1239.00	0.00	0.00	5283.0	1239.10	0.00	0.00	5288.0
1239.10	0.00	0.00	5291.0	1239.10	0.00	0.00	5293.0	1239.10	0.00	0.00	5294.0
1239.20	0.00	0.00	5295.0	1239.20	0.00	0.00	5299.0	1239.10	0.00	0.00	5301.0
1239.20	0.00	0.00	5306.0	1239.30	0.00	0.00	5308.0	1239.60	0.00	0.00	5314.0
1239.60	0.00	0.00	5316.0	1239.60	0.00	0.00	5321.0	1239.60	0.00	0.00	5322.0
1239.60	0.00	0.00	5324.0	1239.60	0.00	0.00	5327.0	1239.60	0.00	0.00	5329.0
1239.70	0.00	0.00	5330.0	1239.70	0.00	0.00	5331.0	1239.80	0.00	0.00	5335.0
1239.90	0.00	0.00	5338.0	1240.00	0.00	0.00	5339.0	1239.90	0.00	0.00	5343.0
1240.00	0.00	0.00	5345.0	1239.90	0.00	0.00	5346.0	1239.90	0.00	0.00	5349.0
1239.90	0.00	0.00	5350.0	1239.90	0.00	0.00	5351.0	1240.10	0.00	0.00	5357.0
1240.20	0.00	0.00	5358.0	1240.10	0.00	0.00	5362.0	1240.10	0.00	0.00	5364.0
1240.10	0.00	0.00	5366.0	1240.40	0.00	0.00	5370.0	1240.90	0.00	0.00	5372.0
1241.90	0.00	0.00	5375.0	1241.88	0.00	0.08	5377.0	1243.33	0.00	-0.07	5379.0
1245.20	0.00	0.00	5382.0	1246.20	0.00	0.00	5384.0	1247.15	0.00	0.05	5386.0
1247.87	0.00	-0.03	5387.0	1250.10	0.00	0.00	5391.0	1252.30	0.00	0.00	5395.0
1254.40	0.00	0.00	5398.0	1256.60	0.00	0.00	5402.0				

ID
15 SECTION 1941.00 TIME = 25.43 HRS WS =1229.68 WIDTH = 123.9

Z	DZ	TDZ	Y	Z	DZ	TDZ	Y	Z	DZ	TDZ	Y

1236.90	0.00	0.00	4891.0	1236.90	0.00	0.00	4894.0	1237.00	0.00	0.00	4897.0
1235.55	0.00	-1.05	4900.0	1232.65	0.00	-3.05	4904.0	1231.92	0.00	-3.68	4905.0
1230.22	0.00	-2.38	4907.3	1230.19	0.00	-2.51	4914.9	1230.19	0.00	-2.21	4917.2
1230.20	0.00	-2.00	4918.7	1230.18	0.00	-1.71	4920.3	1230.19	0.00	-1.61	4922.6
1230.19	0.00	-1.41	4924.4	1230.19	0.00	-1.31	4927.3	1230.18	0.00	-1.52	4928.7
1230.19	0.00	-0.92	4931.0	1230.19	0.00	-0.61	4936.4	1229.39	-0.01	-1.21	4937.9
1229.19	0.00	-1.31	4941.2	1230.05	-0.01	-0.35	4942.4	1229.19	0.00	-1.01	4943.6
1229.39	-0.01	-1.01	4949.6	1229.39	-0.01	-1.11	4951.0	1229.39	-0.01	-1.01	4953.6
1229.39	-0.01	-1.21	4958.1	1229.39	-0.01	-1.21	4958.8	1229.39	-0.01	-0.71	4962.0
1229.39	-0.01	-0.91	4963.7	1229.39	-0.01	-1.01	4964.6	1229.39	-0.01	-0.91	4965.7
1228.77	0.00	-1.33	4969.5	1228.72	0.00	-0.88	4971.2	1228.65	0.00	-0.45	4973.5
1228.48	0.00	0.68	4979.0	1228.42	0.00	0.42	4981.0	1228.25	0.01	0.05	4986.0
1228.13	0.01	-0.47	4989.0	1227.93	0.01	-0.77	4994.0	1227.90	0.01	-0.50	4995.0
1227.89	0.01	0.09	4995.2	1227.89	0.01	0.09	5004.0	1227.92	0.01	-0.18	5005.0
1228.30	0.01	-1.40	5014.5	1228.45	0.00	-2.45	5019.0	1228.55	0.00	-2.25	5022.6
1228.83	0.00	-2.27	5027.9	1229.10	0.00	-2.30	5030.8	1229.18	0.00	-2.22	5032.4
1229.14	0.00	-2.26	5034.1	1229.25	0.00	-2.56	5037.2	1229.25	0.00	-2.75	5040.2
1229.25	0.00	-2.75	5041.0	1229.25	0.00	-2.56	5043.0	1229.25	0.00	-2.25	5046.9
1229.25	0.00	-2.25	5049.6	1229.25	0.00	-2.56	5052.2	1229.25	0.00	-3.15	5055.8
1229.25	0.00	-3.75	5060.6	1230.44	0.00	-3.86	5065.3	1231.52	0.00	-2.68	5066.8
1232.38	0.00	-1.52	5068.0	1232.53	0.00	-1.47	5068.2	1233.12	0.00	-0.98	5069.0
1233.84	0.00	-0.26	5070.0	1236.10	0.00	0.00	5076.0	1236.10	0.00	0.00	5078.0
1236.80	0.00	0.00	5082.0	1237.50	0.00	0.00	5084.0	1237.90	0.00	0.00	5087.0
1238.10	0.00	0.00	5088.0	1238.20	0.00	0.00	5089.0	1239.10	0.00	0.00	5097.0
1239.00	0.00	0.00	5098.0	1238.90	0.00	0.00	5101.0	1238.90	0.00	0.00	5105.0
1238.50	0.00	0.00	5112.0	1238.40	0.00	0.00	5113.0	1238.30	0.00	0.00	5114.0
1236.80	0.00	0.00	5121.0	1236.20	0.00	0.00	5124.0	1234.70	0.00	0.00	5129.0
1235.00	0.00	0.00	5130.0	1235.30	0.00	0.00	5132.0	1234.80	0.00	0.00	5134.0
1234.20	0.00	0.00	5137.0	1234.10	0.00	0.00	5140.0	1233.80	0.00	0.00	5144.0
1233.80	0.00	0.00	5145.0	1233.90	0.00	0.00	5147.0	1233.80	0.00	0.00	5150.0
1233.80	0.00	0.00	5151.0	1233.80	0.00	0.00	5154.0	1233.70	0.00	0.00	5156.0
1233.60	0.00	0.00	5158.0	1233.50	0.00	0.00	5160.0	1233.60	0.00	0.00	5164.0
1233.50	0.00	0.00	5167.0	1233.60	0.00	0.00	5170.0	1233.60	0.00	0.00	5172.0
1233.70	0.00	0.00	5173.0	1233.80	0.00	0.00	5176.0	1233.80	0.00	0.00	5177.0
1233.70	0.00	0.00	5181.0	1233.80	0.00	0.00	5183.0	1233.70	0.00	0.00	5187.0
1233.70	0.00	0.00	5189.0	1233.80	0.00	0.00	5190.0	1233.70	0.00	0.00	5191.0
1233.80	0.00	0.00	5198.0	1233.90	0.00	0.00	5203.0	1233.90	0.00	0.00	5205.0
1233.90	0.00	0.00	5208.0	1234.00	0.00	0.00	5209.0	1233.90	0.00	0.00	5212.0
1234.00	0.00	0.00	5215.0	1234.00	0.00	0.00	5216.0	1234.00	0.00	0.00	5217.0
1233.80	0.00	0.00	5223.0	1233.90	0.00	0.00	5224.0	1234.00	0.00	0.00	5229.0
1233.90	0.00	0.00	5230.0	1233.90	0.00	0.00	5232.0	1233.80	0.00	0.00	5234.0
1233.90	0.00	0.00	5235.0	1233.90	0.00	0.00	5237.0	1233.80	0.00	0.00	5239.0
1233.90	0.00	0.00	5242.0	1233.90	0.00	0.00	5243.0	1233.90	0.00	0.00	5244.0
1233.90	0.00	0.00	5246.0	1234.10	0.00	0.00	5251.0	1234.00	0.00	0.00	5255.0
1234.00	0.00	0.00	5258.0	1234.10	0.00	0.00	5259.0	1234.10	0.00	0.00	5264.0
1234.10	0.00	0.00	5265.0	1234.20	0.00	0.00	5267.0	1234.20	0.00	0.00	5268.0
1234.10	0.00	0.00	5273.0	1234.20	0.00	0.00	5276.0	1234.30	0.00	0.00	5277.0
1234.30	0.00	0.00	5280.0	1234.60	0.00	0.00	5287.0	1234.50	0.00	0.00	5289.0
1234.60	0.00	0.00	5292.0	1234.60	0.00	0.00	5295.0	1234.70	0.00	0.00	5296.0
1234.80	0.00	0.00	5299.0	1234.50	0.00	0.00	5302.0	1234.50	0.00	0.00	5304.0
1234.50	0.00	0.00	5309.0	1234.60	0.00	0.00	5313.0	1234.70	0.00	0.00	5314.0
1234.70	0.00	0.00	5316.0	1234.70	0.00	0.00	5317.0	1234.80	0.00	0.00	5320.0
1234.90	0.00	0.00	5323.0	1235.00	0.00	0.00	5325.0	1235.30	0.00	0.00	5329.0
1235.70	0.00	0.00	5331.0	1235.60	0.00	0.00	5332.0	1235.60	0.00	0.00	5334.0
1235.70	0.00	0.00	5335.0	1235.80	0.00	0.00	5336.0	1236.30	0.00	0.00	5341.0
1236.30	0.00	0.00	5342.0	1236.00	0.00	0.00	5343.0	1236.10	0.00	0.00	5344.0
1236.00	0.00	0.00	5347.0	1236.00	0.00	0.00	5349.0	1236.10	0.00	0.00	5350.0
1236.20	0.00	0.00	5354.0	1236.30	0.00	0.00	5357.0	1236.60	0.00	0.00	5362.0
1236.70	0.00	0.00	5364.0	1236.90	0.00	0.00	5367.0	1237.00	0.00	0.00	5368.0
1237.10	0.00	0.00	5369.0	1237.10	0.00	0.00	5370.0	1237.20	0.00	0.00	5372.0
1237.90	0.00	0.00	5374.0	1238.30	0.00	0.00	5377.0	1238.60	0.00	0.00	5379.0
1238.90	0.00	0.00	5381.0	1239.00	0.00	0.00	5384.0	1239.30	0.00	0.00	5385.0
1240.40	0.00	0.00	5390.0	1241.24	0.00	0.04	5396.0	1243.42	0.00	-0.08	5399.0
1244.30	0.00	0.00	5401.0	1245.00	0.00	0.00	5404.0	1246.80	0.00	0.00	5408.0
1247.90	0.00	0.00	5411.0	1248.00	0.00	0.00	5411.2	1250.80	0.00	0.10	5417.0
1251.53	0.00	-0.17	5418.0	1253.50	0.00	0.00	5421.0	1254.30	0.00	0.00	5423.0
1256.00	0.00	0.00	5426.0								

ID
14 SECTION 1813.00 TIME = 25.43 HRS WS =1227.79 WIDTH = 71.9

Z	DZ	TDZ	Y	Z	DZ	TDZ	Y	Z	DZ	TDZ	Y
1239.00	0.00	0.00	471.0	1238.64	0.00	0.00	471.5	1238.00	0.00	0.00	473.7
1237.00	0.00	0.00	477.0	1236.00	0.00	0.00	480.0	1235.00	0.00	0.00	483.0
1234.00	0.00	0.00	486.0	1233.00	0.00	0.00	489.0	1232.00	0.00	0.00	492.0
1231.00	0.00	0.00	495.7	1230.85	0.00	0.05	497.7	1230.48	0.00	0.48	509.6
1230.40	0.00	1.40	526.6	1230.38	0.00	2.38	529.3	1229.46	0.00	2.46	534.1
1229.17	0.00	3.17	539.9	1229.14	0.00	3.43	549.2	1229.09	0.00	3.08	560.2
1229.08	0.00	2.08	571.3	1229.04	0.00	1.04	580.9	1227.87	0.00	-0.54	590.8
1227.86	0.00	-0.14	610.9	1227.86	0.00	0.86	618.5	1227.86	0.00	1.86	626.8
1226.55	-0.02	1.16	644.9	1226.57	-0.02	0.87	656.2	1226.60	-0.01	0.59	667.4
1226.63	-0.01	-0.20	674.2	1226.67	0.00	-0.25	695.7	1230.17	0.00	3.17	707.8
1230.50	0.00	2.50	710.4	1230.63	0.00	1.63	712.8	1230.78	0.00	0.78	715.8
1230.86	0.00	0.40	717.6	1231.00	0.00	0.00	719.5	1232.00	0.00	0.00	725.2
1233.00	0.00	0.00	731.3	1234.00	0.00	0.00	739.1	1235.00	0.00	0.00	751.7
1235.00	0.00	0.00	762.0								

ID
13 SECTION 1760.00 TIME = 25.43 HRS WS =1227.33 WIDTH = 135.0

Z	DZ	TDZ	Y	Z	DZ	TDZ	Y	Z	DZ	TDZ	Y
1238.00	0.00	0.00	383.0	1237.94	0.00	0.00	383.2	1237.63	0.00	0.00	399.9
1237.63	0.00	0.00	401.9	1237.92	0.00	0.00	420.1	1238.20	0.00	0.00	438.4
1237.00	0.00	0.00	444.2	1236.00	0.00	0.00	447.2	1235.00	0.00	0.00	450.2
1234.00	0.00	0.00	453.2	1233.00	0.00	0.00	456.2	1232.00	0.00	0.00	459.2
1231.00	0.00	0.00	462.2	1230.00	0.00	0.00	465.4	1229.50	0.00	0.00	479.5
1229.42	0.00	0.42	493.8	1229.24	0.00	1.24	501.6	1229.18	0.00	2.18	502.8
1229.10	0.00	3.10	505.2	1229.07	0.00	4.07	507.6	1229.05	0.00	4.34	512.1
1229.01	0.00	4.00	515.7	1228.93	0.00	3.83	517.5	1228.87	0.00	3.87	519.6
1228.83	0.00	4.04	523.7	1228.82	0.00	3.82	526.9	1228.83	0.00	2.83	530.5
1228.83	0.00	2.33	532.7	1228.79	0.00	2.59	535.8	1228.79	0.00	1.78	542.3
1228.78	0.00	1.11	557.2	1228.78	0.00	1.44	568.6	1226.98	-0.01	-0.02	576.8
1226.97	-0.01	-0.03	584.1	1226.97	-0.01	-0.03	585.3	1226.98	-0.01	-0.54	601.6
1226.98	-0.01	-0.05	611.1	1226.98	-0.01	-0.42	623.7	1226.98	-0.01	-0.52	631.9
1226.98	-0.01	-0.02	638.1	1226.97	-0.01	0.97	648.0	1225.68	0.05	0.68	666.5
1225.12	0.07	1.12	673.6	1224.90	0.07	1.09	676.5	1224.90	0.07	1.09	681.7
1225.21	0.07	1.22	685.9	1225.75	0.05	0.75	691.6	1226.85	-0.01	1.25	704.1
1226.87	-0.01	1.87	709.0	1227.97	0.00	1.97	712.0	1227.97	0.00	0.98	715.5
1228.00	0.00	0.00	719.5	1229.42	0.00	0.42	721.5	1230.00	0.00	0.00	724.9
1231.00	0.00	0.00	728.1	1232.00	0.00	0.00	731.4	1233.00	0.00	0.00	734.6
1234.00	0.00	0.00	738.0	1235.00	0.00	0.00	743.6	1235.89	0.00	0.00	750.5
1235.56	0.00	0.00	768.7	1235.22	0.00	0.00	787.0	1234.89	0.00	0.00	805.2
1234.56	0.00	0.00	823.4								

ID
12 SECTION 1680.00 TIME = 25.43 HRS WS =1226.49 WIDTH = 94.2

Z	DZ	TDZ	Y	Z	DZ	TDZ	Y	Z	DZ	TDZ	Y
1235.10	0.00	0.00	1213.3	1235.04	0.00	0.00	1213.5	1234.81	0.00	0.00	1229.7
1234.82	0.00	0.00	1231.7	1234.00	0.00	0.00	1237.2	1233.00	0.00	0.00	1240.3
1232.00	0.00	0.00	1243.5	1231.00	0.00	0.00	1246.6	1230.00	0.00	0.00	1249.8
1229.00	0.00	0.00	1252.9	1228.00	0.00	0.00	1256.1	1227.06	0.00	0.00	1258.9
1227.06	0.00	0.06	1261.7	1224.50	0.00	-1.50	1267.0	1224.49	0.00	-0.51	1269.1
1224.49	0.00	0.49	1270.0	1224.53	0.00	1.29	1282.1	1225.10	0.00	1.10	1294.2
1225.53	0.00	0.53	1300.0	1226.02	0.00	0.42	1306.3	1225.97	0.00	0.96	1311.1
1226.14	0.00	1.42	1317.8	1225.72	0.00	0.71	1324.5	1224.53	0.00	-1.47	1327.8
1227.20	0.00	0.37	1334.1	1227.11	0.00	0.51	1351.9	1226.01	0.00	0.01	1369.0
1226.61	0.00	1.07	1382.4	1226.30	0.00	0.30	1391.9	1227.20	0.00	0.20	1394.0
1227.20	0.00	0.10	1394.6	1227.20	0.00	0.20	1395.2	1227.17	0.00	0.50	1400.6
1227.20	0.00	0.20	1408.1	1227.20	0.00	0.10	1410.2	1227.20	0.00	0.20	1412.8
1226.49	0.00	0.49	1419.1	1226.61	0.00	0.97	1424.0	1226.61	0.00	0.61	1433.0
1227.20	0.00	0.42	1448.1	1226.74	0.00	0.75	1455.8	1227.09	0.00	2.08	1472.2
1227.14	0.00	3.13	1490.5	1227.17	0.00	3.87	1495.9	1227.20	0.00	3.90	1502.9
1227.20	0.00	3.20	1504.9	1227.20	0.00	2.20	1507.9	1227.20	0.00	1.20	1509.7
1227.82	0.00	0.82	1512.6	1228.00	0.00	0.00	1516.1	1229.00	0.00	0.00	1519.0
1230.00	0.00	0.00	1522.2	1230.00	0.00	0.00	1523.2	1230.00	0.00	0.00	1539.2
1230.00	0.00	0.00	1555.1	1231.00	0.00	0.00	1561.5	1232.00	0.00	0.00	1568.0
1233.00	0.00	0.00	1574.8	1234.00	0.00	0.00	1582.4	1235.00	0.00	0.00	1590.9

1235.09	0.00	0.00	1593.3	1234.67	0.00	0.00	1610.1	1234.25	0.00	0.00	1626.8
1233.84	0.00	0.00	1643.5	1233.42	0.00	0.00	1660.3	1233.00	0.00	0.00	1677.0
1232.00	0.00	0.00	1682.4	1231.00	0.00	0.00	1687.5	1230.00	0.00	0.00	1692.6
1230.00	0.00	0.00	1701.3	1230.40	0.00	0.00	1711.0	1230.30	0.00	0.00	1712.5
1230.28	0.00	0.00	1727.6	1230.26	0.00	0.00	1742.6				

ID
11 SECTION 1413.00 TIME = 25.43 HRS WS =1222.32 WIDTH = 65.2

Z	DZ	TDZ	Y	Z	DZ	TDZ	Y	Z	DZ	TDZ	Y
1231.80	0.00	0.00	957.0	1231.50	0.00	0.00	973.2	1231.46	0.00	0.00	975.2
1231.00	0.00	0.00	976.9	1230.00	0.00	0.00	980.0	1229.00	0.00	0.00	983.1
1228.00	0.00	0.00	986.2	1227.00	0.00	0.00	989.3	1226.00	0.00	0.00	992.3
1225.14	0.00	0.14	995.1	1225.03	0.00	0.43	995.9	1225.11	0.00	0.11	1000.3
1225.13	0.00	-0.05	1002.3	1224.10	0.00	-0.90	1007.0	1222.95	0.00	-1.05	1008.6
1221.03	-0.01	-1.97	1014.0	1220.90	-0.01	-1.10	1018.6	1220.77	-0.01	-0.23	1022.9
1220.70	-0.01	-0.10	1031.5	1220.92	-0.01	0.02	1043.4	1221.47	-0.01	0.47	1055.2
1222.07	0.00	0.07	1068.9	1222.60	0.00	0.40	1082.9	1222.60	0.00	0.19	1097.3
1222.60	0.00	0.60	1115.6	1222.60	0.00	0.70	1134.1	1223.43	0.00	1.64	1151.5
1223.44	0.00	2.03	1162.4	1223.44	0.00	2.40	1173.4	1223.44	0.00	2.45	1177.2
1223.44	0.00	2.45	1181.2	1223.44	0.00	1.44	1192.4	1223.51	0.00	0.51	1195.0
1223.45	0.00	-0.55	1197.5	1225.00	0.00	0.00	1207.8	1225.26	0.00	0.06	1210.6
1225.01	0.00	0.00	1214.6	1224.54	0.00	-0.11	1227.7	1224.53	0.00	0.23	1240.8
1224.53	0.00	0.53	1246.7	1224.54	0.00	0.64	1259.0	1224.36	0.00	0.66	1270.1
1224.33	0.00	0.83	1281.3	1224.25	0.00	1.25	1289.1	1224.32	0.00	2.22	1292.2
1224.78	0.00	1.78	1299.9	1225.13	0.00	1.13	1301.7	1225.26	0.00	0.26	1303.6
1226.00	0.00	0.00	1306.6	1226.30	0.00	0.00	1308.2	1226.32	0.00	0.00	1325.8
1226.33	0.00	0.00	1343.5	1226.35	0.00	0.00	1361.2	1226.37	0.00	0.00	1378.9
1226.38	0.00	0.00	1396.6	1226.40	0.00	0.00	1414.3	1226.55	0.00	0.00	1433.0
1226.70	0.00	0.00	1451.6	1226.85	0.00	0.00	1470.3	1227.00	0.00	0.00	1489.0

ID
10 SECTION 1165.00 TIME = 25.43 HRS WS =1220.05 WIDTH = 243.6

Z	DZ	TDZ	Y	Z	DZ	TDZ	Y	Z	DZ	TDZ	Y
1229.40	0.00	0.00	819.9	1229.05	0.00	0.00	835.9	1229.00	0.00	0.00	837.9
1229.00	0.00	0.00	838.1	1228.00	0.00	0.00	841.1	1227.00	0.00	0.00	844.1
1226.00	0.00	0.00	847.1	1225.00	0.00	0.00	850.1	1225.00	0.00	0.00	852.5
1225.00	0.00	0.00	855.2	1225.10	0.00	0.00	855.8	1225.00	0.00	0.00	856.4
1224.00	0.00	0.00	856.8	1223.00	0.00	0.00	857.0	1222.00	0.00	0.00	857.3
1221.00	0.00	0.00	857.5	1220.00	0.00	0.00	857.7	1220.00	0.00	0.90	869.2
1220.00	0.00	0.65	884.6	1220.00	0.00	0.40	900.0	1219.52	0.00	0.52	918.9
1219.52	0.00	1.02	925.6	1219.52	0.00	0.54	940.3	1219.52	0.00	0.73	950.9
1219.52	0.00	0.92	961.6	1219.52	0.00	0.52	971.0	1219.52	0.00	0.42	972.8
1219.52	0.00	0.52	975.1	1219.52	0.00	0.62	976.9	1219.52	0.00	0.52	978.9
1219.44	0.00	0.25	985.7	1219.30	0.00	0.30	990.8	1219.24	0.00	0.34	993.2
1218.97	0.00	0.07	1001.7	1218.90	0.00	-0.10	1003.9	1218.84	0.01	-0.36	1005.9
1218.78	0.01	-0.22	1007.5	1218.07	0.01	-0.03	1013.1	1218.02	0.01	-0.53	1031.7
1219.46	0.00	0.46	1050.3	1219.48	0.00	-0.02	1064.4	1219.39	0.00	-0.61	1079.1
1220.08	0.00	-0.42	1083.5	1219.08	0.00	-1.02	1092.1	1220.65	0.00	-0.35	1097.9
1222.00	0.00	0.00	1100.2	1222.00	0.00	0.00	1100.8	1221.50	0.00	0.00	1112.2
1219.46	0.00	-1.54	1121.8	1220.08	0.00	0.08	1125.1	1220.08	0.00	0.57	1131.6
1220.08	0.00	0.08	1136.5	1220.66	0.00	-0.34	1140.3	1221.19	0.00	-0.04	1144.1
1220.66	0.00	-0.34	1160.4	1220.66	0.00	-0.14	1166.7	1221.00	0.00	0.00	1170.5
1222.00	0.00	0.00	1173.9	1223.00	0.00	0.00	1176.9	1223.54	0.00	0.00	1178.5
1223.53	0.00	0.00	1197.0	1223.52	0.00	0.00	1215.5	1223.51	0.00	0.00	1234.0
1223.50	0.00	0.00	1252.5								

ID
9 SECTION 930.00 TIME = 25.43 HRS WS =1216.91 WIDTH = 98.1

Z	DZ	TDZ	Y	Z	DZ	TDZ	Y	Z	DZ	TDZ	Y
1227.20	0.00	0.00	628.2	1226.95	0.00	0.00	644.4	1227.00	0.00	0.00	646.4
1226.00	0.00	0.00	649.4	1225.00	0.00	0.00	652.4	1224.00	0.00	0.00	655.5
1223.00	0.00	0.00	658.5	1222.00	0.00	0.00	661.6	1221.46	0.00	0.00	663.6
1219.06	0.00	-1.94	670.7	1218.27	0.00	-1.73	671.7	1217.63	0.00	-1.37	672.6
1217.39	0.00	-0.61	672.9	1217.39	0.00	0.39	688.2	1217.39	0.00	1.39	689.8
1217.39	0.00	2.09	697.1	1217.39	0.00	1.75	716.5	1217.38	0.00	1.40	735.9

1217.39	0.00	1.55	745.9	1217.39	0.00	1.68	756.0	1217.39	0.00	1.51	762.1
1217.39	0.00	1.39	774.2	1217.39	0.00	0.89	781.5	1217.39	0.00	1.39	800.1
1216.27	-0.01	0.77	820.1	1214.06	-0.03	-0.95	839.8	1214.06	-0.03	-0.95	840.3
1216.10	-0.01	0.10	850.0	1216.41	-0.01	-0.59	855.9	1216.42	-0.01	-0.58	856.5
1216.42	-0.01	-0.58	856.9	1216.55	-0.01	-0.25	870.7	1216.66	-0.01	0.05	884.4
1216.78	0.00	0.38	898.5	1216.99	0.00	0.29	911.8	1216.99	0.00	-0.01	924.8
1216.99	0.00	-1.01	934.4	1218.33	0.00	-0.67	936.8	1220.00	0.00	0.00	940.6
1221.00	0.00	0.00	950.2	1221.20	0.00	0.00	956.2	1221.00	0.00	0.00	960.4
1220.99	0.00	0.00	961.5	1221.00	0.00	0.00	961.7	1221.64	0.00	0.00	964.2
1221.64	0.00	0.00	981.9	1221.64	0.00	0.00	999.7	1221.65	0.00	0.00	1017.4
1221.65	0.00	0.00	1035.2	1221.65	0.00	0.00	1052.9				

ID
8 SECTION 818.00 TIME = 25.43 HRS WS =1215.81 WIDTH = 179.5

Z	DZ	TDZ	Y	Z	DZ	TDZ	Y	Z	DZ	TDZ	Y
1225.10	0.00	0.00	0.0	1225.00	0.00	0.00	1.0	1224.00	0.00	0.00	4.1
1223.00	0.00	0.00	7.2	1222.00	0.00	0.00	10.4	1221.00	0.00	0.00	13.5
1220.92	0.00	0.00	13.8	1219.90	0.00	-0.10	22.3	1218.45	0.00	-0.55	24.3
1217.47	0.00	-0.53	25.7	1217.43	0.00	0.43	31.2	1217.43	0.00	0.52	34.0
1217.43	0.00	0.43	35.6	1217.42	0.00	0.22	37.3	1217.17	0.00	0.17	38.7
1217.16	0.00	0.26	42.4	1217.15	0.00	0.16	45.2	1217.17	0.00	-0.23	50.7
1217.11	0.00	0.11	57.0	1217.10	0.00	0.47	58.5	1217.10	0.00	0.10	62.0
1217.10	0.00	0.11	71.0	1217.10	0.00	1.10	72.7	1217.09	0.00	2.09	74.7
1215.45	-0.01	1.31	92.7	1215.45	-0.01	1.15	112.1	1215.44	-0.01	0.99	129.9
1215.45	0.01	0.85	147.7	1215.44	0.01	0.44	157.7	1215.43	0.01	0.03	161.5
1213.84	0.01	-1.16	166.4	1213.70	0.02	-0.30	167.6	1213.59	0.02	0.09	175.0
1213.79	0.01	-0.21	189.1	1215.62	0.01	1.12	202.0	1215.62	0.01	0.62	216.2
1215.62	0.01	-0.38	231.0	1215.62	0.01	-0.40	233.3	1215.63	0.01	-0.37	237.3
1215.63	0.01	0.09	251.6	1215.67	-0.01	0.58	267.5	1216.72	0.00	1.60	273.7
1216.73	0.00	0.72	287.7	1216.81	0.00	0.31	298.9	1216.95	0.00	-0.05	310.5
1216.95	0.00	-1.05	326.2	1219.00	0.00	0.00	329.8	1219.18	0.00	0.00	330.5
1220.00	0.00	0.00	333.8	1221.00	0.00	0.00	336.8	1221.20	0.00	0.00	338.3
1221.18	0.00	0.00	357.7	1221.17	0.00	0.00	377.2	1221.15	0.00	0.00	396.6
1221.14	0.00	0.00	416.1	1221.12	0.00	0.00	435.5				

ID
7 SECTION 611.00 TIME = 25.43 HRS WS =1212.87 WIDTH = 92.0

Z	DZ	TDZ	Y	Z	DZ	TDZ	Y	Z	DZ	TDZ	Y
1224.70	0.00	0.00	267.9	1224.49	0.00	0.00	285.2	1224.48	0.00	0.00	287.4
1224.00	0.00	0.00	288.8	1223.00	0.00	0.00	292.0	1222.00	0.00	0.00	295.2
1221.00	0.00	0.00	298.5	1220.00	0.00	0.00	301.7	1218.79	0.00	-0.21	304.9
1218.37	0.00	0.09	305.5	1218.22	0.00	-0.08	313.7	1217.03	0.00	-0.97	315.3
1215.94	0.00	-1.06	316.8	1215.67	0.00	-0.33	317.2	1215.61	0.00	0.61	321.0
1215.60	0.00	0.90	326.6	1215.59	0.00	0.59	333.8	1215.49	0.00	0.19	341.3
1215.45	0.00	0.04	354.9	1215.60	0.00	0.08	368.4	1215.31	0.00	0.31	386.6
1214.86	0.00	0.86	394.3	1214.98	0.00	1.48	403.2	1214.97	0.00	1.97	407.7
1214.68	0.00	2.17	425.2	1214.35	0.00	2.35	442.9	1214.23	0.00	2.02	451.1
1211.98	0.00	-0.02	454.9	1211.97	0.01	0.41	461.5	1211.94	0.01	-0.06	467.2
1211.91	0.01	-0.09	469.0	1211.88	0.01	0.39	472.6	1211.83	0.01	-0.17	474.8
1211.72	0.01	-0.32	485.3	1211.67	0.01	-0.33	489.3	1211.57	0.01	0.07	500.8
1211.49	0.01	0.49	512.2	1211.90	0.01	1.09	515.8	1212.11	0.01	1.11	523.7
1212.47	0.00	0.47	540.3	1212.75	0.00	-0.25	545.3	1214.06	0.00	0.06	547.1
1214.74	0.00	0.24	562.4	1215.17	0.00	0.17	577.6	1215.16	0.00	-0.14	585.9
1215.17	0.00	0.17	597.7	1214.89	0.00	0.39	612.2	1214.77	0.00	0.77	626.7
1214.85	0.00	1.05	635.3	1215.13	0.00	1.13	644.5	1215.19	0.00	0.19	646.8
1215.23	0.00	0.09	649.9	1215.36	0.00	-0.64	654.2	1216.79	0.00	-0.21	656.5
1218.00	0.00	0.00	659.5	1219.00	0.00	0.00	662.5	1220.00	0.00	0.00	666.2
1220.10	0.00	0.00	666.7	1220.00	0.00	0.00	685.5	1220.00	0.00	0.00	693.9
1219.90	0.00	0.00	707.4	1219.88	0.00	0.00	725.3	1219.85	0.00	0.00	743.2
1219.82	0.00	0.00	761.2	1219.80	0.00	0.00	779.1	1219.83	0.00	0.00	798.7
1219.87	0.00	0.00	818.3	1219.90	0.00	0.00	837.9	1219.93	0.00	0.00	857.5
1219.97	0.00	0.00	877.2	1220.00	0.00	0.00	896.8				

ID
6 SECTION 424.00 TIME = 25.43 HRS WS =1210.70 WIDTH = 85.4

Z	DZ	TDZ	Y	Z	DZ	TDZ	Y	Z	DZ	TDZ	Y

1224.00	0.00	0.00	163.6	1224.00	0.00	0.00	163.8	1224.00	0.00	0.00	166.8
1224.00	0.00	0.00	167.0	1224.00	0.00	0.00	183.1	1224.00	0.00	0.00	183.3
1224.00	0.00	0.00	198.0	1224.00	0.00	0.00	198.2	1224.00	0.00	0.00	207.4
1224.00	0.00	0.00	207.6	1224.00	0.00	0.00	208.7	1224.00	0.00	0.00	208.9
1221.00	0.00	0.00	209.6	1220.50	0.00	0.00	222.8	1220.00	0.00	0.00	236.0
1219.00	0.00	0.00	245.1	1218.10	0.00	0.00	251.6	1218.00	0.00	0.00	253.5
1218.00	0.00	0.00	271.0	1218.00	0.00	0.00	288.4	1218.00	0.00	0.00	290.5
1217.67	0.00	0.00	308.0	1217.33	0.00	0.00	325.6	1217.00	0.00	0.00	343.2
1217.00	0.00	0.00	361.2	1217.00	0.00	0.00	366.5	1216.00	0.00	0.00	383.7
1215.00	0.00	0.00	386.9	1214.31	0.00	0.22	396.2	1214.30	0.00	0.10	399.7
1214.15	0.00	0.15	405.5	1214.15	0.00	1.15	418.4	1214.08	0.00	2.08	428.7
1214.08	0.00	3.08	434.3	1213.42	0.00	2.92	446.6	1213.39	0.00	3.39	459.0
1213.37	0.00	3.47	459.2	1212.61	0.00	2.61	467.6	1210.21	0.00	-0.43	472.0
1209.85	0.00	-0.15	485.8	1209.61	0.00	-0.39	500.7	1209.49	-0.01	-0.51	516.0
1209.45	-0.01	-0.55	523.6	1209.44	-0.01	0.44	525.1	1209.43	-0.01	0.62	526.7
1209.36	-0.01	0.55	541.4	1210.47	0.00	1.67	556.2	1211.00	0.00	2.00	557.0
1211.00	0.00	1.00	558.8	1211.00	0.00	0.00	561.8	1212.00	0.00	0.00	562.0
1213.91	0.00	0.91	564.6	1214.00	0.00	0.00	567.3	1215.00	0.00	0.00	569.9
1216.00	0.00	0.00	572.8	1216.60	0.00	0.00	580.0	1216.53	0.00	0.00	586.0
1224.00	0.00	0.00	601.0								

ID
5 SECTION 398.00 TIME = 25.43 HRS WS =1210.31 WIDTH = 76.3

Z	DZ	TDZ	Y	Z	DZ	TDZ	Y	Z	DZ	TDZ	Y
1220.20	0.00	0.00	4623.0	1220.40	0.00	0.00	4625.0	1220.20	0.00	0.00	4626.0
1220.30	0.00	0.00	4627.0	1220.00	0.00	0.00	4632.0	1219.90	0.00	0.00	4634.0
1218.80	0.00	0.00	4638.0	1218.80	0.00	0.00	4644.0	1218.60	0.00	0.00	4645.0
1218.70	0.00	0.00	4648.0	1218.10	0.00	0.00	4649.0	1217.80	0.00	0.00	4651.0
1218.20	0.00	0.00	4663.0	1218.10	0.00	0.00	4666.0	1217.70	0.00	0.00	4667.0
1217.90	0.00	0.00	4669.0	1218.00	0.00	0.00	4674.0	1217.90	0.00	0.00	4676.0
1217.50	0.00	0.00	4680.0	1217.30	0.00	0.00	4681.0	1217.50	0.00	0.00	4683.0
1217.50	0.00	0.00	4687.0	1217.80	0.00	0.00	4690.0	1217.90	0.00	0.00	4694.0
1217.70	0.00	0.00	4695.0	1217.80	0.00	0.00	4697.0	1217.90	0.00	0.00	4700.0
1218.20	0.00	0.00	4702.0	1218.30	0.00	0.00	4703.0	1218.20	0.00	0.00	4705.0
1217.90	0.00	0.00	4709.0	1218.20	0.00	0.00	4712.0	1218.20	0.00	0.00	4715.0
1218.40	0.00	0.00	4718.0	1218.00	0.00	0.00	4721.0	1218.10	0.00	0.00	4728.0
1218.50	0.00	0.00	4732.0	1218.50	0.00	0.00	4733.0	1217.90	0.00	0.00	4736.0
1217.90	0.00	0.00	4738.0	1217.80	0.00	0.00	4739.0	1218.00	0.00	0.00	4741.0
1218.20	0.00	0.00	4743.0	1218.30	0.00	0.00	4750.0	1218.00	0.00	0.00	4752.0
1218.30	0.00	0.00	4755.0	1218.10	0.00	0.00	4758.0	1217.80	0.00	0.00	4759.0
1218.30	0.00	0.00	4763.0	1218.60	0.00	0.00	4764.0	1218.70	0.00	0.00	4766.0
1218.20	0.00	0.00	4767.0	1218.00	0.00	0.00	4769.0	1218.10	0.00	0.00	4770.0
1218.00	0.00	0.00	4777.0	1218.40	0.00	0.00	4780.0	1218.10	0.00	0.00	4781.0
1217.80	0.00	0.00	4784.0	1218.00	0.00	0.00	4786.0	1218.10	0.00	0.00	4788.0
1217.90	0.00	0.00	4792.0	1218.10	0.00	0.00	4794.0	1218.10	0.00	0.00	4795.0
1218.20	0.00	0.00	4800.0	1217.90	0.00	0.00	4807.0	1218.00	0.00	0.00	4812.0
1217.60	0.00	0.00	4819.0	1217.90	0.00	0.00	4824.0	1217.90	0.00	0.00	4825.0
1217.80	0.00	0.00	4827.0	1217.80	0.00	0.00	4831.0	1217.90	0.00	0.00	4832.0
1217.80	0.00	0.00	4835.0	1217.60	0.00	0.00	4838.0	1218.00	0.00	0.00	4842.0
1218.00	0.00	0.00	4843.0	1217.90	0.00	0.00	4844.0	1218.00	0.00	0.00	4857.0
1218.00	0.00	0.00	4858.0	1218.00	0.00	0.00	4858.2	1217.40	0.00	0.00	4868.0
1217.60	0.00	0.00	4870.0	1217.20	0.00	0.00	4873.0	1217.20	0.00	0.00	4874.0
1217.50	0.00	0.00	4878.0	1217.30	0.00	0.00	4879.0	1217.10	0.00	0.00	4881.0
1217.30	0.00	0.00	4882.0	1217.80	0.00	0.00	4886.0	1217.60	0.00	0.00	4889.0
1217.80	0.00	0.00	4892.0	1217.90	0.00	0.00	4896.0	1217.50	0.00	0.00	4900.0
1218.20	0.00	0.00	4902.0	1217.90	0.00	0.00	4905.0	1217.70	0.00	0.00	4909.0
1218.20	0.00	0.00	4917.0	1218.20	0.00	0.00	4921.0	1217.80	0.00	0.00	4927.0
1217.80	0.00	0.00	4932.0	1217.80	0.00	0.00	4933.0	1217.80	0.00	0.00	4934.0
1215.40	0.00	0.00	4940.0	1211.60	0.00	0.00	4944.2	1210.80	0.00	0.00	4944.4
1210.29	0.03	-1.01	4948.6	1209.89	0.00	-1.41	4949.2	1209.70	0.00	-1.51	4952.6
1209.69	0.00	-1.41	4952.8	1209.23	-0.01	-0.47	4956.4	1209.18	-0.01	-0.82	4965.0
1209.17	-0.01	-0.93	4969.0	1209.15	-0.01	-0.35	4974.0	1209.15	-0.01	-0.34	4978.0
1209.15	-0.01	-0.35	4979.0	1209.15	-0.01	-0.55	4982.0	1209.15	-0.01	-0.45	4986.0
1209.15	-0.01	-0.55	4988.0	1209.15	-0.01	-0.35	4990.0	1209.15	-0.01	-0.65	4993.0
1209.15	-0.01	-0.55	4994.0	1209.15	-0.01	-0.55	4995.0	1209.15	-0.01	-0.35	4999.0
1209.15	-0.01	-0.05	5001.0	1209.15	-0.01	0.25	5004.0	1209.15	-0.01	0.05	5009.0
1209.15	-0.01	-0.25	5012.0	1209.15	-0.01	-0.05	5014.0	1209.22	-0.01	0.12	5019.6
1210.29	0.01	0.08	5024.5	1210.80	0.00	0.00	5024.8	1210.80	0.00	0.00	5025.3

1214.00	0.00	0.00	5031.0	1216.50	0.00	0.00	5038.0	1216.90	0.00	0.00	5040.0
1216.70	0.00	0.00	5042.0	1216.40	0.00	0.00	5048.0	1216.50	0.00	0.00	5049.0
1216.70	0.00	0.00	5050.0	1216.70	0.00	0.00	5054.0	1216.40	0.00	0.00	5059.0
1216.60	0.00	0.00	5060.0	1216.40	0.00	0.00	5062.0	1216.60	0.00	0.00	5064.0
1216.90	0.00	0.00	5067.0	1216.40	0.00	0.00	5075.0	1216.60	0.00	0.00	5078.0
1216.60	0.00	0.00	5079.0	1216.70	0.00	0.00	5081.0	1216.40	0.00	0.00	5085.0
1216.00	0.00	0.00	5089.0	1215.80	0.00	0.00	5097.0	1216.10	0.00	0.00	5099.0
1216.20	0.00	0.00	5102.0	1216.20	0.00	0.00	5107.6	1226.20	0.00	0.00	5127.6

ID
4 SECTION 352.00 TIME = 25.43 HRS WS =1210.21 WIDTH = 70.6

Z	DZ	TDZ	Y	Z	DZ	TDZ	Y	Z	DZ	TDZ	Y
1220.40	0.00	0.00	4618.0	1220.70	0.00	0.00	4623.0	1220.30	0.00	0.00	4626.0
1220.40	0.00	0.00	4628.0	1220.40	0.00	0.00	4630.0	1220.60	0.00	0.00	4631.0
1220.60	0.00	0.00	4635.0	1219.90	0.00	0.00	4637.0	1219.90	0.00	0.00	4638.0
1219.80	0.00	0.00	4641.0	1219.90	0.00	0.00	4644.0	1219.80	0.00	0.00	4645.0
1219.90	0.00	0.00	4646.0	1220.50	0.00	0.00	4647.0	1220.40	0.00	0.00	4648.0
1220.20	0.00	0.00	4652.0	1220.30	0.00	0.00	4653.0	1220.10	0.00	0.00	4654.0
1220.10	0.00	0.00	4658.0	1220.60	0.00	0.00	4659.0	1220.40	0.00	0.00	4661.0
1220.50	0.00	0.00	4662.0	1219.90	0.00	0.00	4664.0	1220.40	0.00	0.00	4669.0
1220.00	0.00	0.00	4673.0	1220.30	0.00	0.00	4678.0	1220.00	0.00	0.00	4683.0
1220.10	0.00	0.00	4684.0	1219.70	0.00	0.00	4688.0	1220.00	0.00	0.00	4690.0
1220.10	0.00	0.00	4691.0	1220.00	0.00	0.00	4693.0	1220.00	0.00	0.00	4695.0
1220.20	0.00	0.00	4696.0	1220.20	0.00	0.00	4697.0	1220.00	0.00	0.00	4698.0
1219.80	0.00	0.00	4704.0	1220.10	0.00	0.00	4711.0	1220.20	0.00	0.00	4713.0
1220.20	0.00	0.00	4714.0	1219.60	0.00	0.00	4719.0	1220.00	0.00	0.00	4727.0
1219.90	0.00	0.00	4728.0	1219.60	0.00	0.00	4730.0	1219.40	0.00	0.00	4731.0
1219.30	0.00	0.00	4733.0	1219.50	0.00	0.00	4738.0	1219.90	0.00	0.00	4741.0
1219.80	0.00	0.00	4744.0	1219.60	0.00	0.00	4746.0	1219.80	0.00	0.00	4748.0
1219.80	0.00	0.00	4751.0	1219.70	0.00	0.00	4753.0	1219.90	0.00	0.00	4759.0
1219.40	0.00	0.00	4762.0	1219.40	0.00	0.00	4763.0	1219.50	0.00	0.00	4770.0
1219.80	0.00	0.00	4773.0	1219.70	0.00	0.00	4774.0	1219.50	0.00	0.00	4776.0
1219.50	0.00	0.00	4778.0	1219.00	0.00	0.00	4781.0	1219.20	0.00	0.00	4783.0
1219.20	0.00	0.00	4785.0	1219.50	0.00	0.00	4789.0	1219.50	0.00	0.00	4790.0
1219.10	0.00	0.00	4793.0	1219.00	0.00	0.00	4797.0	1218.80	0.00	0.00	4799.0
1219.30	0.00	0.00	4803.0	1219.20	0.00	0.00	4804.0	1219.40	0.00	0.00	4805.0
1219.40	0.00	0.00	4807.0	1219.30	0.00	0.00	4808.0	1218.80	0.00	0.00	4815.0
1218.80	0.00	0.00	4816.0	1219.30	0.00	0.00	4822.0	1219.20	0.00	0.00	4824.0
1219.20	0.00	0.00	4826.0	1219.00	0.00	0.00	4830.0	1218.70	0.00	0.00	4832.0
1218.70	0.00	0.00	4833.0	1218.90	0.00	0.00	4840.0	1218.80	0.00	0.00	4843.0
1218.60	0.00	0.00	4845.0	1218.80	0.00	0.00	4847.0	1218.40	0.00	0.00	4851.0
1218.60	0.00	0.00	4853.0	1218.60	0.00	0.00	4859.0	1218.10	0.00	0.00	4865.0
1218.20	0.00	0.00	4866.0	1218.20	0.00	0.00	4867.0	1218.70	0.00	0.00	4873.0
1218.70	0.00	0.00	4876.0	1218.20	0.00	0.00	4881.0	1218.70	0.00	0.00	4890.0
1218.60	0.00	0.00	4893.0	1218.30	0.00	0.00	4896.0	1218.60	0.00	0.00	4898.0
1218.20	0.00	0.00	4901.0	1218.30	0.00	0.00	4907.0	1218.10	0.00	0.00	4909.0
1218.10	0.00	0.00	4911.0	1217.90	0.00	0.00	4912.0	1217.90	0.00	0.00	4916.0
1216.80	0.00	0.00	4922.0	1216.30	0.00	0.00	4929.0	1214.50	0.00	0.00	4932.0
1213.50	0.00	0.00	4939.0	1212.90	0.00	0.00	4940.4	1210.78	0.00	-0.02	4945.0
1210.75	0.00	-0.05	4945.3	1210.21	0.00	0.01	4951.9	1209.39	0.01	-1.41	4956.1
1209.37	0.01	-1.13	4957.0	1209.25	0.01	-0.15	4964.2	1209.17	0.01	-0.03	4969.0
1209.09	0.01	-0.21	4973.0	1209.00	0.01	0.40	4979.0	1208.98	0.01	0.18	4981.0
1208.93	0.01	-0.28	4988.0	1208.92	0.01	0.02	4991.0	1208.92	0.01	0.32	4994.0
1208.91	0.01	0.21	4998.0	1208.91	0.01	0.31	4999.0	1208.91	0.01	0.01	5000.0
1208.91	0.01	0.01	5002.0	1208.90	0.01	0.50	5008.0	1208.91	0.01	0.11	5015.0
1208.92	0.01	-0.39	5019.0	1208.92	0.01	-0.38	5021.0	1209.65	0.01	0.05	5022.1
1211.90	0.00	0.00	5023.6	1212.50	0.00	0.00	5025.2	1215.10	0.00	0.00	5036.0
1215.50	0.00	0.00	5038.0	1215.50	0.00	0.00	5039.0	1216.00	0.00	0.00	5040.0
1216.30	0.00	0.00	5046.0	1216.30	0.00	0.00	5047.0	1216.30	0.00	0.00	5048.0
1216.60	0.00	0.00	5050.0	1215.40	0.00	0.00	5054.0	1215.50	0.00	0.00	5055.0
1215.70	0.00	0.00	5056.0	1216.00	0.00	0.00	5058.0	1216.80	0.00	0.00	5061.0
1216.70	0.00	0.00	5064.0	1217.30	0.00	0.00	5066.0	1217.30	0.00	0.00	5067.0
1217.30	0.00	0.00	5072.0	1217.10	0.00	0.00	5076.0				

ID
3 SECTION 339.00 TIME = 25.43 HRS WS =1210.11 WIDTH = 77.5

Z	DZ	TDZ	Y	Z	DZ	TDZ	Y	Z	DZ	TDZ	Y

1220.90	0.00	0.00	4621.0	1220.90	0.00	0.00	4622.0	1220.10	0.00	0.00	4634.0
1220.10	0.00	0.00	4635.0	1220.80	0.00	0.00	4640.0	1220.80	0.00	0.00	4643.0
1220.60	0.00	0.00	4646.0	1220.30	0.00	0.00	4647.0	1220.60	0.00	0.00	4649.0
1220.70	0.00	0.00	4652.0	1220.30	0.00	0.00	4656.0	1220.70	0.00	0.00	4657.0
1220.40	0.00	0.00	4662.0	1220.70	0.00	0.00	4667.0	1220.30	0.00	0.00	4668.0
1220.40	0.00	0.00	4672.0	1219.90	0.00	0.00	4676.0	1220.00	0.00	0.00	4677.0
1220.00	0.00	0.00	4677.2	1220.40	0.00	0.00	4681.0	1219.80	0.00	0.00	4686.0
1220.40	0.00	0.00	4690.0	1220.20	0.00	0.00	4694.0	1220.30	0.00	0.00	4695.0
1220.40	0.00	0.00	4698.0	1219.90	0.00	0.00	4702.0	1219.60	0.00	0.00	4703.0
1219.80	0.00	0.00	4704.0	1220.20	0.00	0.00	4706.0	1220.00	0.00	0.00	4707.0
1220.00	0.00	0.00	4709.0	1219.80	0.00	0.00	4710.0	1219.70	0.00	0.00	4713.0
1220.20	0.00	0.00	4715.0	1219.90	0.00	0.00	4718.0	1219.75	0.00	0.00	4731.5
1219.60	0.00	0.00	4745.0	1220.10	0.00	0.00	4748.0	1219.90	0.00	0.00	4749.0
1220.10	0.00	0.00	4751.0	1220.00	0.00	0.00	4756.0	1219.40	0.00	0.00	4762.0
1220.00	0.00	0.00	4767.0	1219.80	0.00	0.00	4769.0	1220.00	0.00	0.00	4770.0
1219.70	0.00	0.00	4776.0	1220.00	0.00	0.00	4781.0	1219.90	0.00	0.00	4782.0
1220.00	0.00	0.00	4784.0	1219.70	0.00	0.00	4790.0	1220.10	0.00	0.00	4795.0
1220.00	0.00	0.00	4796.0	1219.60	0.00	0.00	4798.0	1219.90	0.00	0.00	4801.0
1219.70	0.00	0.00	4809.0	1219.40	0.00	0.00	4815.0	1220.00	0.00	0.00	4819.0
1219.50	0.00	0.00	4827.0	1219.80	0.00	0.00	4831.0	1219.30	0.00	0.00	4834.0
1219.80	0.00	0.00	4836.0	1219.10	0.00	0.00	4844.0	1219.20	0.00	0.00	4845.0
1218.90	0.00	0.00	4850.0	1219.60	0.00	0.00	4855.0	1218.80	0.00	0.00	4862.0
1219.30	0.00	0.00	4866.0	1219.30	0.00	0.00	4867.0	1219.50	0.00	0.00	4869.0
1219.20	0.00	0.00	4877.0	1219.00	0.00	0.00	4882.0	1219.40	0.00	0.00	4885.0
1219.30	0.00	0.00	4888.0	1218.80	0.00	0.00	4893.0	1219.00	0.00	0.00	4898.0
1218.80	0.00	0.00	4899.0	1219.00	0.00	0.00	4903.0	1218.70	0.00	0.00	4904.0
1218.50	0.00	0.00	4909.0	1218.20	0.00	0.00	4911.0	1218.30	0.00	0.00	4916.0
1217.80	0.00	0.00	4921.0	1216.30	0.00	0.00	4927.0	1216.20	0.00	0.00	4928.0
1216.30	0.00	0.00	4930.0	1215.90	0.00	0.00	4931.0	1214.80	0.00	0.00	4934.0
1214.40	0.00	0.00	4936.0	1213.00	0.00	0.00	4938.9	1212.04	0.00	0.34	4941.7
1211.69	0.00	0.19	4943.2	1210.71	0.00	0.00	4947.3	1209.53	0.00	-0.17	4958.0
1209.43	0.00	-0.27	4961.2	1209.25	0.00	0.05	4967.0	1209.12	0.00	0.72	4970.0
1209.04	0.00	0.14	4975.0	1209.03	0.00	0.12	4976.0	1208.99	0.00	0.09	4978.0
1208.96	0.00	0.06	4980.0	1208.92	0.00	0.33	4982.0	1208.85	0.00	0.35	4986.0
1208.84	0.00	0.14	4988.0	1208.80	0.00	0.10	4994.0	1208.79	0.00	-0.11	4997.0
1208.78	0.00	-0.12	4998.0	1208.75	0.00	0.15	5003.0	1208.75	0.00	0.35	5007.0
1208.76	0.00	0.16	5009.0	1208.77	0.00	0.07	5010.0	1208.82	0.00	0.12	5019.0
1208.85	0.00	-0.55	5023.8	1209.12	0.00	-0.58	5028.7	1209.94	0.00	0.04	5029.8
1210.01	0.00	0.00	5030.1	1210.15	0.00	0.25	5030.3	1210.28	0.00	0.08	5031.1
1212.50	0.00	0.00	5035.4	1214.10	0.00	0.00	5039.0	1215.60	0.00	0.00	5046.0
1215.40	0.00	0.00	5047.0	1216.60	0.00	0.00	5055.0	1217.20	0.00	0.00	5058.0
1217.20	0.00	0.00	5062.0	1217.60	0.00	0.00	5072.0	1217.40	0.00	0.00	5074.0
1217.50	0.00	0.00	5076.0	1217.80	0.00	0.00	5078.0				

ID
2 SECTION 218.00 TIME = 25.43 HRS WS =1208.79 WIDTH = 89.0

Z	DZ	TDZ	Y	Z	DZ	TDZ	Y	Z	DZ	TDZ	Y
1221.30	0.00	0.00	4621.0	1221.10	0.00	0.00	4623.0	1221.00	0.00	0.00	4624.0
1221.00	0.00	0.00	4625.0	1220.90	0.00	0.00	4631.0	1221.00	0.00	0.00	4632.0
1221.30	0.00	0.00	4634.0	1221.20	0.00	0.00	4636.0	1221.40	0.00	0.00	4638.0
1220.90	0.00	0.00	4643.0	1221.30	0.00	0.00	4647.0	1220.80	0.00	0.00	4657.0
1220.80	0.00	0.00	4658.0	1221.30	0.00	0.00	4664.0	1220.70	0.00	0.00	4674.0
1220.90	0.00	0.00	4675.0	1221.20	0.00	0.00	4680.0	1221.20	0.00	0.00	4683.0
1220.40	0.00	0.00	4690.0	1220.70	0.00	0.00	4692.0	1220.90	0.00	0.00	4697.0
1220.80	0.00	0.00	4699.0	1220.80	0.00	0.00	4700.0	1220.40	0.00	0.00	4707.0
1220.80	0.00	0.00	4712.0	1220.90	0.00	0.00	4718.0	1220.40	0.00	0.00	4723.0
1220.80	0.00	0.00	4729.0	1220.90	0.00	0.00	4731.0	1220.70	0.00	0.00	4733.0
1220.80	0.00	0.00	4734.0	1220.20	0.00	0.00	4739.0	1220.60	0.00	0.00	4745.0
1220.50	0.00	0.00	4750.0	1220.70	0.00	0.00	4751.0	1220.20	0.00	0.00	4754.0
1220.60	0.00	0.00	4762.0	1220.20	0.00	0.00	4766.0	1220.20	0.00	0.00	4768.0
1220.10	0.00	0.00	4769.0	1220.00	0.00	0.00	4773.0	1220.70	0.00	0.00	4777.0
1220.00	0.00	0.00	4784.0	1220.10	0.00	0.00	4786.0	1220.40	0.00	0.00	4787.0
1219.90	0.00	0.00	4789.0	1220.40	0.00	0.00	4792.0	1219.90	0.00	0.00	4802.0
1219.90	0.00	0.00	4804.0	1220.50	0.00	0.00	4807.0	1220.20	0.00	0.00	4810.0
1220.10	0.00	0.00	4812.0	1219.80	0.00	0.00	4815.0	1220.10	0.00	0.00	4818.0
1220.00	0.00	0.00	4819.0	1220.20	0.00	0.00	4821.0	1220.40	0.00	0.00	4822.0
1219.20	0.00	0.00	4826.0	1219.90	0.00	0.00	4837.0	1219.20	0.00	0.00	4845.0
1219.30	0.00	0.00	4846.0	1219.70	0.00	0.00	4852.0	1219.90	0.00	0.00	4853.0
1219.50	0.00	0.00	4854.0	1219.30	0.00	0.00	4855.0	1219.40	0.00	0.00	4863.0

1219.20	0.00	0.00	4865.0	1219.10	0.00	0.00	4869.0	1219.10	0.00	0.00	4870.0
1218.70	0.00	0.00	4874.0	1218.80	0.00	0.00	4881.0	1219.20	0.00	0.00	4882.0
1219.20	0.00	0.00	4901.5	1219.20	0.00	0.00	4921.0	1217.50	0.00	0.00	4936.0
1216.70	0.00	0.00	4940.0	1215.40	0.00	0.00	4943.0	1214.70	0.00	0.00	4943.2
1214.10	0.00	0.00	4945.0	1210.62	0.00	0.12	4955.3	1210.55	0.00	0.45	4957.0
1210.58	0.00	0.88	4957.2	1207.33	0.00	-0.58	4963.8	1207.34	0.00	-0.06	4978.0
1207.33	0.00	0.23	4981.0	1207.32	0.00	0.21	4986.0	1207.31	0.00	0.01	4987.0
1207.31	0.00	-0.09	4989.0	1207.29	0.00	0.19	4995.0	1207.28	0.00	0.18	4998.0
1207.70	0.00	0.70	5001.0	1207.71	0.00	0.21	5004.0	1207.72	0.00	0.32	5007.0
1207.73	0.00	0.63	5010.0	1207.74	0.00	0.64	5012.0	1208.19	0.00	0.19	5016.0
1208.26	0.00	0.56	5017.0	1208.28	0.00	-0.32	5036.0	1208.30	0.00	0.10	5049.4
1210.43	0.00	0.03	5051.3	1212.60	0.00	0.00	5055.0	1215.30	0.00	0.00	5064.0
1216.90	0.00	0.00	5072.0	1217.00	0.00	0.00	5072.2	1217.00	0.00	0.00	5074.0
1217.40	0.00	0.00	5079.0	1217.20	0.00	0.00	5080.0	1217.30	0.00	0.00	5083.0
1217.10	0.00	0.00	5086.0	1217.30	0.00	0.00	5087.0	1217.20	0.00	0.00	5090.0
1217.60	0.00	0.00	5093.0	1217.90	0.00	0.00	5095.0	1217.90	0.00	0.00	5096.0
1217.40	0.00	0.00	5099.0	1217.70	0.00	0.00	5104.0	1217.50	0.00	0.00	5105.0
1217.80	0.00	0.00	5110.0	1217.80	0.00	0.00	5111.0	1217.70	0.00	0.00	5119.0
1217.80	0.00	0.00	5121.0	1217.50	0.00	0.00	5124.0	1217.80	0.00	0.00	5128.0
1217.30	0.00	0.00	5137.0	1217.50	0.00	0.00	5138.0	1217.90	0.00	0.00	5149.0
1217.40	0.00	0.00	5154.0	1217.30	0.00	0.00	5160.0	1217.50	0.00	0.00	5166.0
1217.00	0.00	0.00	5169.0	1216.80	0.00	0.00	5180.0	1217.30	0.00	0.00	5185.0
1217.20	0.00	0.00	5191.0	1217.10	0.00	0.00	5192.0	1216.90	0.00	0.00	5197.0
1216.60	0.00	0.00	5199.0	1216.50	0.00	0.00	5200.0	1216.90	0.00	0.00	5203.0
1216.10	0.00	0.00	5209.0	1216.60	0.00	0.00	5222.0	1216.40	0.00	0.00	5223.0

FLUVIAL-12 FLOOD SERIES RESULTS

TIME = 69.20 HRS DT = 10 SECS TIME STEP = 10655

SECTION	W.S.ELEV. FT	WIDTH FT	DEPTH FT	Q CFS	V FPS	SLOPE	D50 MM	QS/Q 1000 PPM	FR	SED. YIELD TONS
137.000	1211.80	114.3	5.80	4097	8.43	0.007635	0.84	21.36	0.72	0.769E+05
218.000	1212.35	104.7	5.54	4097	8.75	0.007691	0.87	22.08	0.73	0.802E+05
339.000	1213.26	98.3	5.75	4097	8.80	0.007416	0.91	23.30	0.71	0.801E+05
352.000	1213.31	89.0	5.97	4097	9.01	0.007176	0.82	15.89	0.70	0.801E+05
398.000	1213.52	87.7	5.44	4097	9.56	0.008418	0.79	34.37	0.76	0.814E+05
424.000	1214.42	172.2	5.72	4097	7.50	0.008933	0.73	24.52	0.74	0.815E+05
611.000	1216.48	343.1	6.25	4097	5.40	0.007420	0.92	21.94	0.64	0.823E+05
818.000	1218.18	307.3	5.57	4097	7.37	0.017895	0.81	46.38	0.96	0.850E+05
930.000	1219.28	283.9	3.50	4097	7.61	0.017983	0.82	48.43	0.97	0.875E+05
1165.000	1222.80	319.2	4.35	4097	6.02	0.009586	0.85	37.62	0.73	0.898E+05
1413.000	1225.60	308.7	5.04	4097	7.32	0.017927	0.92	59.13	0.96	0.943E+05
1680.000	1229.11	266.8	5.26	4097	6.11	0.007996	0.88	2.98	0.68	0.995E+05
1760.000	1229.81	259.1	4.94	4097	7.80	0.017255	0.97	28.77	0.96	0.102E+06
1813.000	1230.62	222.7	3.53	4097	8.07	0.015816	0.94	47.77	0.94	0.103E+06
1941.000	1232.42	175.3	3.34	4097	8.47	0.013518	0.91	30.05	0.90	0.104E+06
2243.000	1235.99	114.5	3.93	4097	9.63	0.012026	0.96	52.32	0.88	0.102E+06
2634.000	1240.82	125.7	3.73	4097	9.30	0.012002	0.91	14.91	0.88	0.982E+05
2960.000	1244.36	118.0	3.61	4097	10.34	0.015714	1.03	82.66	0.99	0.981E+05
3361.000	1250.66	268.4	5.74	4097	6.48	0.009859	0.91	7.02	0.74	0.992E+05
3706.000	1253.10	81.8	6.17	4097	9.76	0.008144	0.88	35.50	0.76	0.101E+06
3785.000	1253.72	61.7	7.52	4097	9.62	0.006337	0.85	13.28	0.65	0.101E+06
3814.000	1253.63	69.4	5.72	4097	10.81	0.009916	0.84	38.27	0.81	0.101E+06
3845.000	1254.03	127.8	4.66	4097	9.93	0.015070	1.02	62.58	0.97	0.101E+06
3922.000	1255.97	231.3	4.62	4097	7.05	0.010610	0.89	22.88	0.78	0.100E+06
4001.000	1256.92	278.7	5.10	4097	7.07	0.013773	0.78	18.74	0.86	0.998E+05
4158.000	1258.82	355.3	4.55	4097	7.12	0.019826	0.80	56.88	0.99	0.999E+05
4334.000	1260.82	321.0	4.16	4097	7.14	0.017250	0.80	38.62	0.94	0.100E+06
4579.000	1264.08	227.7	3.72	4097	6.94	0.009909	1.07	41.95	0.76	0.981E+05
4974.000	1269.18	181.2	3.46	4097	8.77	0.015878	0.98	54.53	0.96	0.957E+05
5474.000	1275.96	158.3	5.24	4097	8.17	0.010814	0.94	29.68	0.81	0.952E+05
5702.000	1278.88	380.9	5.65	4097	5.30	0.008096	1.02	22.69	0.66	0.905E+05
5930.000	1281.96	470.6	3.38	4097	6.26	0.018666	0.84	28.85	0.94	0.866E+05
6083.000	1284.36	633.9	4.57	4097	5.81	0.021494	0.93	43.41	0.97	0.850E+05
6350.000	1287.95	1135.0	5.85	4097	3.21	0.006477	0.84	9.06	0.53	0.855E+05
6406.000	1288.11	316.9	5.65	4097	6.84	0.014894	1.00	19.76	0.88	0.919E+05
6463.000	1288.81	242.8	4.66	4097	7.58	0.014817	0.89	32.72	0.89	0.967E+05
6822.000	1294.20	362.7	4.25	4097	7.12	0.020159	0.95	43.06	1.00	0.947E+05
7036.000	1296.20	399.7	4.85	4097	6.77	0.019354	1.02	47.02	0.97	0.953E+05
7171.000	1298.26	355.1	6.67	4097	5.47	0.008334	0.84	5.75	0.66	0.930E+05
7182.000	1298.41	383.4	6.64	4097	5.14	0.007376	0.96	20.39	0.63	0.944E+05
7220.000	1298.46	253.2	4.54	4097	7.14	0.012557	0.80	29.65	0.84	0.942E+05
7462.000	1301.71	311.9	2.97	4097	6.78	0.013878	0.84	29.87	0.86	0.927E+05
7674.000	1304.70	348.9	3.62	4097	6.43	0.013495	0.79	28.21	0.84	0.930E+05
7835.000	1306.66	348.0	5.40	4097	5.65	0.008806	1.14	24.42	0.69	0.948E+05
7977.000	1307.78	174.0	3.83	4097	8.55	0.013802	0.92	40.83	0.91	0.956E+05
8156.000	1309.48	309.5	3.39	4097	7.34	0.018004	0.99	41.62	0.96	0.950E+05
8333.000	1311.18	252.9	4.01	4097	7.75	0.016458	1.11	36.60	0.94	0.920E+05
8661.000	1316.10	468.4	3.56	4097	6.34	0.019272	1.26	31.66	0.95	0.888E+05
9076.000	1322.92	1094.4	5.22	4097	3.91	0.011817	0.98	19.98	0.71	0.884E+05
9389.000	1326.12	913.9	6.91	4097	4.81	0.018867	0.86	20.57	0.88	0.941E+05
9468.000	1327.32	890.9	8.37	4097	4.99	0.020610	0.92	25.59	0.92	0.936E+05
9503.000	1328.00	853.0	8.76	4097	4.64	0.015185	0.91	18.24	0.80	0.935E+05
9595.000	1329.30	770.6	6.36	4097	5.07	0.017868	0.84	9.30	0.87	0.931E+05
9885.000	1332.20	391.4	5.12	4097	6.88	0.020611	1.14	46.82	0.98	0.912E+05
10056.000	1335.08	992.5	6.55	4097	3.54	0.007554	0.99	10.37	0.58	0.893E+05
10178.000	1336.21	804.8	5.22	4097	5.03	0.018468	0.90	18.40	0.88	0.877E+05
10196.000	1336.57	807.4	5.49	4097	5.18	0.020662	0.99	29.99	0.92	0.874E+05
10219.000	1336.99	644.2	4.27	4097	4.99	0.013371	0.81	8.31	0.78	0.875E+05
10593.000	1343.42	966.6	3.72	4097	5.05	0.023463	0.84	31.05	0.97	0.882E+05
10871.000	1345.72	788.9	4.53	4097	5.41	0.022979	0.95	33.29	0.97	0.993E+05
10947.000	1346.42	364.2	2.03	4097	6.76	0.016942	1.03	27.83	0.92	0.974E+05
11004.000	1347.22	452.2	4.14	4097	6.54	0.020501	1.19	38.97	0.98	0.956E+05

11267.000	1350.56	473.7	7.72	4097	4.42	0.005927	1.00	12.81	0.56	0.917E+05
11543.000	1355.19	1007.0	3.58	4097	4.78	0.020503	0.78	24.28	0.91	0.861E+05
11783.000	1356.99	511.0	5.60	4097	5.94	0.017734	0.89	31.68	0.90	0.936E+05
12094.000	1362.34	1330.5	3.93	4097	4.48	0.024151	1.02	26.12	0.95	0.856E+05
12370.000	1365.54	747.1	6.99	4097	3.52	0.005181	0.97	7.81	0.50	0.102E+06
12657.000	1369.95	1083.2	3.05	4097	4.79	0.023088	0.84	26.64	0.95	0.964E+05
12784.000	1371.78	248.0	3.96	4097	7.23	0.012657	0.87	33.87	0.84	0.100E+06
12997.000	1373.88	740.7	5.15	4097	5.25	0.018876	0.67	21.30	0.90	0.102E+06
13357.000	1375.98	222.6	5.74	4097	8.22	0.017301	1.08	52.35	0.97	0.106E+06
13392.000	1377.18	617.3	6.06	4097	5.62	0.018516	0.98	32.04	0.91	0.103E+06
13427.000	1377.75	448.4	7.05	4097	5.63	0.012581	1.15	20.18	0.78	0.102E+06
13781.000	1383.14	797.8	2.77	4097	5.00	0.017506	0.60	8.83	0.87	0.965E+05
14059.000	1385.44	503.6	3.68	4097	6.32	0.020851	0.61	61.37	0.98	0.114E+06
14339.000	1388.88	230.0	4.27	4097	8.00	0.016034	0.64	43.06	0.94	0.117E+06
14524.000	1391.80	210.4	5.21	4097	8.29	0.016310	0.63	84.23	0.95	0.123E+06
14687.000	1394.66	399.9	7.16	4097	5.41	0.009203	0.87	30.98	0.69	0.128E+06

ID
17 SECTION 2634.00 TIME = 69.20 HRS WS =1240.82 WIDTH = 125.7

Z	DZ	TDZ	Y	Z	DZ	TDZ	Y	Z	DZ	TDZ	Y
1243.90	0.00	0.00	4926.0	1243.90	0.00	0.00	4928.0	1241.65	-0.02	-2.55	4931.0
1240.60	-0.01	-3.29	4932.5	1240.54	0.01	-3.06	4933.5	1239.94	0.02	-3.16	4934.8
1238.53	0.03	-3.97	4936.7	1237.16	0.04	-3.35	4939.8	1237.15	0.04	-2.35	4945.7
1237.15	0.04	-2.35	4949.0	1237.15	0.04	-2.46	4950.9	1237.15	0.04	-2.46	4952.4
1237.15	0.04	-2.25	4953.7	1237.15	0.04	-1.95	4957.6	1237.15	0.04	-1.85	4958.7
1237.15	0.04	-1.85	4959.2	1237.15	0.04	-1.75	4961.9	1237.15	0.04	-1.65	4963.0
1237.15	0.04	-1.65	4964.6	1237.15	0.04	-1.16	4966.2	1237.15	0.04	-0.65	4967.9
1237.15	0.04	-0.05	4970.3	1237.15	0.05	0.05	4974.1	1237.15	0.05	0.05	4975.0
1237.15	0.05	0.15	4978.0	1237.15	0.05	0.15	4979.0	1237.14	0.05	0.15	4981.0
1237.14	0.05	0.84	4983.9	1237.14	0.05	1.14	4986.6	1237.14	0.05	1.35	4987.7
1237.14	0.05	2.14	4990.4	1237.14	0.05	2.54	4993.0	1237.14	0.05	2.94	4996.0
1237.14	0.05	2.74	4999.0	1237.14	0.05	2.75	5001.0	1237.14	0.05	2.84	5004.0
1237.14	0.05	2.74	5006.0	1237.14	0.05	2.65	5011.0	1237.14	0.05	2.84	5012.0
1237.14	0.05	2.84	5016.0	1237.14	0.05	4.04	5017.0	1237.14	0.05	4.04	5026.0
1237.14	0.05	2.84	5028.2	1237.14	0.05	-0.16	5033.1	1237.14	0.05	-2.16	5035.7
1237.14	0.05	-3.16	5037.2	1237.14	0.05	-4.15	5042.3	1237.14	0.05	-5.26	5045.6
1237.14	0.05	-5.56	5049.4	1237.85	0.04	-7.25	5052.7	1239.40	0.01	-5.90	5056.0
1240.89	-0.03	-4.61	5058.0	1242.36	-0.01	-2.84	5060.0	1243.10	-0.01	-2.20	5061.0
1245.28	-0.01	-0.32	5064.0	1245.40	0.00	0.00	5065.0	1244.90	0.00	0.00	5066.0
1244.10	0.00	0.00	5071.0	1243.20	0.00	0.00	5075.0	1242.80	0.00	0.00	5077.0
1243.40	0.00	0.00	5081.0	1243.70	0.00	0.00	5085.0	1243.50	0.00	0.00	5088.0
1243.50	0.00	0.00	5091.0	1243.50	0.00	0.00	5092.0	1243.50	0.00	0.00	5093.0
1243.40	0.00	0.00	5097.0	1243.50	0.00	0.00	5098.0	1243.30	0.00	0.00	5100.0
1243.30	0.00	0.00	5103.0	1243.40	0.00	0.00	5105.0	1243.20	0.00	0.00	5106.0
1243.10	0.00	0.00	5107.0	1243.20	0.00	0.00	5113.0	1243.30	0.00	0.00	5118.0
1243.30	0.00	0.00	5121.0	1243.20	0.00	0.00	5128.0	1243.20	0.00	0.00	5129.0
1243.30	0.00	0.00	5132.0	1243.60	0.00	0.00	5135.0	1243.30	0.00	0.00	5138.0
1243.50	0.00	0.00	5142.0	1243.40	0.00	0.00	5144.0	1243.40	0.00	0.00	5146.0
1243.50	0.00	0.00	5149.0	1243.50	0.00	0.00	5151.0	1243.40	0.00	0.00	5155.0
1243.40	0.00	0.00	5157.0	1243.30	0.00	0.00	5159.0	1243.20	0.00	0.00	5163.0
1243.20	0.00	0.00	5165.0	1243.20	0.00	0.00	5166.0	1243.30	0.00	0.00	5170.0
1243.20	0.00	0.00	5171.0	1243.30	0.00	0.00	5172.0	1243.30	0.00	0.00	5174.0
1243.10	0.00	0.00	5180.0	1243.10	0.00	0.00	5181.0	1243.10	0.00	0.00	5183.0
1243.40	0.00	0.00	5187.0	1243.40	0.00	0.00	5188.0	1243.40	0.00	0.00	5191.0
1243.40	0.00	0.00	5193.0	1243.30	0.00	0.00	5195.0	1243.40	0.00	0.00	5197.0
1243.40	0.00	0.00	5198.0	1243.40	0.00	0.00	5201.0	1243.20	0.00	0.00	5204.0
1243.20	0.00	0.00	5205.0	1243.20	0.00	0.00	5208.0	1243.30	0.00	0.00	5211.0
1243.30	0.00	0.00	5212.0	1243.30	0.00	0.00	5213.0	1243.30	0.00	0.00	5214.0
1243.20	0.00	0.00	5216.0	1243.10	0.00	0.00	5219.0	1243.10	0.00	0.00	5221.0
1243.00	0.00	0.00	5222.0	1243.00	0.00	0.00	5224.0	1243.10	0.00	0.00	5226.0
1243.70	0.00	0.00	5228.0	1243.90	0.00	0.00	5231.0	1243.50	0.00	0.00	5232.0
1243.90	0.00	0.00	5234.0	1243.90	0.00	0.00	5236.0	1243.90	0.00	0.00	5243.0
1244.00	0.00	0.00	5246.0	1243.60	0.00	0.00	5250.0	1243.10	0.00	0.00	5258.0
1243.60	0.00	0.00	5268.0	1243.60	0.00	0.00	5270.0	1243.40	0.00	0.00	5275.0
1243.70	0.00	0.00	5276.0	1243.80	0.00	0.00	5277.0	1243.70	0.00	0.00	5284.0
1243.70	0.00	0.00	5285.0	1244.10	0.00	0.00	5291.0	1244.10	0.00	0.00	5292.0
1244.10	0.00	0.00	5293.0	1244.00	0.00	0.00	5296.0	1243.70	0.00	0.00	5299.0
1243.70	0.00	0.00	5300.0	1243.70	0.00	0.00	5304.0	1243.80	0.00	0.00	5306.0
1244.00	0.00	0.00	5307.0	1243.90	0.00	0.00	5313.0	1243.80	0.00	0.00	5314.0
1243.80	0.00	0.00	5317.0	1244.00	0.00	0.00	5319.0	1244.10	0.00	0.00	5322.0
1243.80	0.00	0.00	5325.0	1243.90	0.00	0.00	5326.0	1244.10	0.00	0.00	5330.0
1243.90	0.00	0.00	5332.0	1243.80	0.00	0.00	5333.0	1243.90	0.00	0.00	5335.0
1244.10	0.00	0.00	5337.0	1244.00	0.00	0.00	5338.0	1244.00	0.00	0.00	5339.0
1243.90	0.00	0.00	5341.0	1243.90	0.00	0.00	5344.0	1243.80	0.00	0.00	5346.0
1243.70	0.00	0.00	5348.0	1244.10	0.00	0.00	5352.0	1244.10	0.00	0.00	5354.0
1244.20	0.00	0.00	5360.0	1244.20	0.00	0.00	5361.0	1244.30	0.00	0.00	5362.0
1244.40	0.00	0.00	5367.0	1244.40	0.00	0.00	5369.0	1244.30	0.00	0.00	5370.0
1244.30	0.00	0.00	5374.0	1244.30	0.00	0.00	5376.0	1244.30	0.00	0.00	5377.0
1244.30	0.00	0.00	5378.0	1244.40	0.00	0.00	5383.0	1244.60	0.00	0.00	5384.0
1244.70	0.00	0.00	5385.0	1244.50	0.00	0.00	5386.0	1244.60	0.00	0.00	5388.0
1245.20	0.00	0.00	5393.0	1245.60	0.00	0.00	5396.0	1246.30	0.00	0.00	5401.0
1246.40	0.00	0.00	5402.0	1247.60	0.00	0.00	5409.0	1247.70	0.00	0.00	5410.0
1248.50	0.00	0.00	5416.0	1249.30	0.00	0.00	5418.0	1250.30	0.00	0.00	5423.0
1250.70	0.00	0.00	5424.0	1250.70	0.00	0.00	5426.0	1252.00	0.00	0.00	5429.0
1252.20	0.00	0.00	5430.0	1253.80	0.00	0.00	5434.0	1254.10	0.00	0.00	5435.0

1254.30	0.00	0.00	5437.0

ID
16 SECTION 2243.00 TIME = 69.20 HRS WS =1235.99 WIDTH = 114.5

Z	DZ	TDZ	Y	Z	DZ	TDZ	Y	Z	DZ	TDZ	Y
1239.90	0.00	0.00	4939.0	1239.90	0.00	0.00	4941.0	1236.90	0.00	-3.10	4944.0
1235.24	0.00	-4.76	4945.7	1233.93	0.00	-5.46	4947.0	1232.10	0.00	-7.20	4948.8
1232.03	-0.02	-7.07	4950.4	1232.03	-0.02	-4.67	4955.4	1232.03	-0.02	-3.97	4963.7
1232.03	-0.03	-3.27	4965.2	1232.03	-0.03	-2.87	4965.8	1232.03	-0.03	-1.37	4967.7
1232.03	-0.03	-0.17	4972.2	1232.03	-0.03	-0.07	4975.0	1232.03	-0.03	0.43	4977.1
1232.03	-0.03	1.13	4982.0	1232.03	-0.03	1.23	4984.0	1232.03	-0.03	1.13	4985.0
1232.03	-0.03	1.02	4990.0	1232.03	-0.03	1.02	4992.0	1232.02	-0.03	1.22	4995.0
1232.02	-0.03	1.23	5004.0	1232.03	-0.03	1.03	5005.0	1232.03	-0.03	1.13	5007.0
1232.03	-0.03	1.13	5008.0	1232.03	-0.03	1.13	5010.0	1232.03	-0.03	0.93	5013.0
1232.03	-0.03	0.73	5013.9	1232.03	-0.03	0.22	5016.9	1232.03	-0.03	0.03	5018.6
1232.03	-0.03	-0.67	5019.0	1232.03	-0.03	-1.27	5020.0	1232.03	-0.03	-1.97	5022.2
1232.03	-0.03	-2.67	5025.3	1232.03	-0.03	-3.06	5028.7	1232.03	-0.03	-3.17	5029.8
1232.03	-0.02	-3.18	5034.3	1232.03	-0.02	-3.57	5036.3	1232.03	-0.02	-3.77	5037.7
1232.03	-0.02	-4.08	5039.0	1232.03	-0.02	-4.38	5044.6	1232.03	-0.02	-5.67	5050.7
1232.43	-0.02	-6.87	5052.5	1233.37	-0.02	-6.03	5053.8	1234.80	-0.01	-5.00	5056.1
1235.67	-0.01	-4.63	5059.0	1236.43	-0.02	-3.57	5060.0	1237.20	-0.02	-2.80	5061.0
1237.94	-0.01	-1.96	5062.0	1238.67	-0.01	-1.23	5063.0	1239.90	0.00	0.00	5065.0
1239.10	0.00	0.00	5069.0	1239.00	0.00	0.00	5069.2	1238.90	0.00	0.00	5070.0
1238.60	0.00	0.00	5073.0	1237.80	0.00	0.00	5078.0	1238.40	0.00	0.00	5086.0
1238.60	0.00	0.00	5091.0	1238.40	0.00	0.00	5094.0	1238.30	0.00	0.00	5098.0
1238.10	0.00	0.00	5102.0	1238.40	0.00	0.00	5105.0	1238.40	0.00	0.00	5106.0
1238.40	0.00	0.00	5110.0	1238.40	0.00	0.00	5112.0	1238.40	0.00	0.00	5113.0
1238.50	0.00	0.00	5119.0	1238.70	0.00	0.00	5124.0	1238.80	0.00	0.00	5125.0
1238.80	0.00	0.00	5126.0	1238.90	0.00	0.00	5131.0	1239.00	0.00	0.00	5132.0
1238.90	0.00	0.00	5133.0	1238.60	0.00	0.00	5135.0	1238.50	0.00	0.00	5137.0
1238.40	0.00	0.00	5140.0	1238.20	0.00	0.00	5143.0	1238.20	0.00	0.00	5145.0
1238.30	0.00	0.00	5148.0	1238.30	0.00	0.00	5151.0	1238.30	0.00	0.00	5152.0
1238.40	0.00	0.00	5153.0	1238.40	0.00	0.00	5156.0	1238.30	0.00	0.00	5159.0
1238.20	0.00	0.00	5163.0	1238.00	0.00	0.00	5168.0	1238.10	0.00	0.00	5171.0
1238.10	0.00	0.00	5175.0	1238.20	0.00	0.00	5180.0	1238.20	0.00	0.00	5182.0
1238.20	0.00	0.00	5186.0	1238.30	0.00	0.00	5189.0	1238.60	0.00	0.00	5191.0
1238.70	0.00	0.00	5194.0	1238.60	0.00	0.00	5196.0	1238.50	0.00	0.00	5198.0
1238.40	0.00	0.00	5199.0	1238.70	0.00	0.00	5202.0	1238.70	0.00	0.00	5203.0
1238.60	0.00	0.00	5205.0	1238.30	0.00	0.00	5207.0	1238.40	0.00	0.00	5210.0
1238.30	0.00	0.00	5211.0	1238.40	0.00	0.00	5215.0	1238.40	0.00	0.00	5216.0
1238.60	0.00	0.00	5219.0	1238.30	0.00	0.00	5223.0	1238.40	0.00	0.00	5226.0
1238.50	0.00	0.00	5230.0	1238.50	0.00	0.00	5231.0	1238.50	0.00	0.00	5232.0
1238.50	0.00	0.00	5238.0	1238.60	0.00	0.00	5241.0	1238.70	0.00	0.00	5245.0
1238.70	0.00	0.00	5246.0	1238.90	0.00	0.00	5248.0	1239.00	0.00	0.00	5253.0
1238.90	0.00	0.00	5254.0	1238.80	0.00	0.00	5257.0	1238.70	0.00	0.00	5259.0
1238.80	0.00	0.00	5260.0	1238.90	0.00	0.00	5261.0	1239.00	0.00	0.00	5265.0
1239.10	0.00	0.00	5267.0	1238.90	0.00	0.00	5269.0	1238.90	0.00	0.00	5270.0
1239.00	0.00	0.00	5274.0	1239.00	0.00	0.00	5275.0	1239.10	0.00	0.00	5279.0
1239.00	0.00	0.00	5282.0	1239.00	0.00	0.00	5283.0	1239.10	0.00	0.00	5288.0
1239.10	0.00	0.00	5291.0	1239.10	0.00	0.00	5293.0	1239.10	0.00	0.00	5294.0
1239.20	0.00	0.00	5295.0	1239.20	0.00	0.00	5299.0	1239.10	0.00	0.00	5301.0
1239.20	0.00	0.00	5306.0	1239.30	0.00	0.00	5308.0	1239.60	0.00	0.00	5314.0
1239.60	0.00	0.00	5316.0	1239.60	0.00	0.00	5321.0	1239.60	0.00	0.00	5322.0
1239.60	0.00	0.00	5324.0	1239.60	0.00	0.00	5327.0	1239.60	0.00	0.00	5329.0
1239.70	0.00	0.00	5330.0	1239.70	0.00	0.00	5331.0	1239.80	0.00	0.00	5335.0
1239.90	0.00	0.00	5338.0	1240.00	0.00	0.00	5339.0	1239.90	0.00	0.00	5343.0
1240.00	0.00	0.00	5345.0	1239.90	0.00	0.00	5346.0	1239.90	0.00	0.00	5349.0
1239.90	0.00	0.00	5350.0	1239.90	0.00	0.00	5351.0	1240.10	0.00	0.00	5357.0
1240.20	0.00	0.00	5358.0	1240.10	0.00	0.00	5362.0	1240.10	0.00	0.00	5364.0
1240.10	0.00	0.00	5366.0	1240.40	0.00	0.00	5370.0	1240.90	0.00	0.00	5372.0
1241.90	0.00	0.00	5375.0	1241.88	0.00	0.08	5377.0	1243.33	0.00	-0.07	5379.0
1245.20	0.00	0.00	5382.0	1246.20	0.00	0.00	5384.0	1247.15	0.00	0.05	5386.0
1247.87	0.00	-0.03	5387.0	1250.10	0.00	0.00	5391.0	1252.30	0.00	0.00	5395.0
1254.40	0.00	0.00	5398.0	1256.60	0.00	0.00	5402.0				

ID
15 SECTION 1941.00 TIME = 69.20 HRS WS =1232.42 WIDTH = 175.3

Z	DZ	TDZ	Y	Z	DZ	TDZ	Y	Z	DZ	TDZ	Y

1236.90	0.00	0.00	4891.0	1236.90	0.00	0.00	4894.0	1233.90	0.00	-3.10	4897.0
1231.79	0.00	-4.81	4899.1	1231.75	0.01	-3.94	4900.7	1231.67	0.01	-3.93	4902.9
1230.84	0.01	-1.76	4906.5	1230.43	0.01	-2.27	4912.8	1230.41	0.01	-1.99	4916.5
1230.39	0.01	-1.81	4918.4	1230.37	0.01	-1.52	4920.2	1230.36	0.01	-1.45	4922.3
1230.34	0.01	-1.26	4924.2	1230.31	0.01	-1.20	4927.0	1230.29	0.01	-1.41	4928.2
1230.29	0.01	-0.81	4929.4	1230.23	0.01	-0.58	4935.7	1230.20	0.01	-0.40	4938.5
1230.18	0.02	-0.32	4940.5	1230.17	0.02	-0.23	4942.0	1230.16	0.02	-0.04	4944.5
1229.19	0.02	-1.21	4947.5	1229.11	0.02	-1.39	4950.0	1229.11	0.02	-1.29	4953.9
1229.11	0.02	-1.49	4958.3	1229.11	0.02	-1.50	4958.9	1229.11	0.02	-1.00	4961.8
1229.11	0.02	-1.20	4963.7	1229.11	0.02	-1.30	4964.6	1229.11	0.02	-1.20	4965.6
1229.10	0.02	-0.99	4969.6	1229.10	0.02	-0.50	4971.3	1229.10	0.02	0.00	4973.3
1229.10	0.02	1.31	4977.0	1229.10	0.02	1.10	4981.0	1229.10	0.02	0.90	4986.0
1229.10	0.02	0.50	4989.0	1229.10	0.02	0.40	4994.0	1229.10	0.02	0.70	4995.0
1229.10	0.02	1.30	4995.2	1229.10	0.02	1.30	5004.0	1229.10	0.02	1.00	5007.7
1229.10	0.02	-0.59	5013.6	1229.10	0.02	-1.79	5018.9	1229.10	0.02	-1.69	5025.1
1229.10	0.02	-2.00	5028.0	1229.10	0.02	-2.30	5030.8	1229.11	0.02	-2.30	5032.6
1229.11	0.02	-2.30	5035.3	1229.15	0.02	-2.66	5037.4	1229.17	0.02	-2.83	5040.4
1229.20	0.02	-2.81	5041.9	1229.22	0.02	-2.59	5043.4	1229.29	0.02	-2.21	5047.9
1229.32	0.02	-2.19	5049.7	1229.39	0.02	-2.42	5053.2	1229.67	0.02	-2.74	5058.7
1230.55	0.01	-2.46	5062.3	1230.56	0.01	-3.74	5064.4	1231.14	0.01	-3.06	5066.9
1231.08	0.01	-2.82	5068.5	1231.10	0.01	-2.90	5068.8	1231.11	0.01	-2.99	5069.8
1231.29	0.01	-2.81	5072.2	1234.03	0.00	-2.07	5076.0	1235.48	0.00	-0.62	5078.0
1236.80	0.00	0.00	5082.0	1237.50	0.00	0.00	5084.0	1237.90	0.00	0.00	5087.0
1238.10	0.00	0.00	5088.0	1238.20	0.00	0.00	5089.0	1239.10	0.00	0.00	5097.0
1239.00	0.00	0.00	5098.0	1238.90	0.00	0.00	5101.0	1238.90	0.00	0.00	5105.0
1238.50	0.00	0.00	5112.0	1238.40	0.00	0.00	5113.0	1238.30	0.00	0.00	5114.0
1236.80	0.00	0.00	5121.0	1236.20	0.00	0.00	5124.0	1234.70	0.00	0.00	5129.0
1235.00	0.00	0.00	5130.0	1235.30	0.00	0.00	5132.0	1234.80	0.00	0.00	5134.0
1234.20	0.00	0.00	5137.0	1234.10	0.00	0.00	5140.0	1233.80	0.00	0.00	5144.0
1233.80	0.00	0.00	5145.0	1233.90	0.00	0.00	5147.0	1233.80	0.00	0.00	5150.0
1233.80	0.00	0.00	5151.0	1233.80	0.00	0.00	5154.0	1233.70	0.00	0.00	5156.0
1233.60	0.00	0.00	5158.0	1233.50	0.00	0.00	5160.0	1233.60	0.00	0.00	5164.0
1233.50	0.00	0.00	5167.0	1233.60	0.00	0.00	5170.0	1233.60	0.00	0.00	5172.0
1233.70	0.00	0.00	5173.0	1233.80	0.00	0.00	5176.0	1233.80	0.00	0.00	5177.0
1233.70	0.00	0.00	5181.0	1233.80	0.00	0.00	5183.0	1233.70	0.00	0.00	5187.0
1233.70	0.00	0.00	5189.0	1233.80	0.00	0.00	5190.0	1233.70	0.00	0.00	5191.0
1233.80	0.00	0.00	5198.0	1233.90	0.00	0.00	5203.0	1233.90	0.00	0.00	5205.0
1233.90	0.00	0.00	5208.0	1234.00	0.00	0.00	5209.0	1233.90	0.00	0.00	5212.0
1234.00	0.00	0.00	5215.0	1234.00	0.00	0.00	5216.0	1234.00	0.00	0.00	5217.0
1233.80	0.00	0.00	5223.0	1233.90	0.00	0.00	5224.0	1234.00	0.00	0.00	5229.0
1233.90	0.00	0.00	5230.0	1233.90	0.00	0.00	5232.0	1233.80	0.00	0.00	5234.0
1233.90	0.00	0.00	5235.0	1233.90	0.00	0.00	5237.0	1233.80	0.00	0.00	5239.0
1233.90	0.00	0.00	5242.0	1233.90	0.00	0.00	5243.0	1233.90	0.00	0.00	5244.0
1233.90	0.00	0.00	5246.0	1234.10	0.00	0.00	5251.0	1234.00	0.00	0.00	5255.0
1234.00	0.00	0.00	5258.0	1234.10	0.00	0.00	5259.0	1234.10	0.00	0.00	5264.0
1234.10	0.00	0.00	5265.0	1234.20	0.00	0.00	5267.0	1234.20	0.00	0.00	5268.0
1234.10	0.00	0.00	5273.0	1234.20	0.00	0.00	5276.0	1234.30	0.00	0.00	5277.0
1234.30	0.00	0.00	5280.0	1234.60	0.00	0.00	5287.0	1234.50	0.00	0.00	5289.0
1234.60	0.00	0.00	5292.0	1234.60	0.00	0.00	5295.0	1234.70	0.00	0.00	5296.0
1234.80	0.00	0.00	5299.0	1234.50	0.00	0.00	5302.0	1234.50	0.00	0.00	5304.0
1234.50	0.00	0.00	5309.0	1234.60	0.00	0.00	5313.0	1234.70	0.00	0.00	5314.0
1234.70	0.00	0.00	5316.0	1234.70	0.00	0.00	5317.0	1234.80	0.00	0.00	5320.0
1234.90	0.00	0.00	5323.0	1235.00	0.00	0.00	5325.0	1235.30	0.00	0.00	5329.0
1235.70	0.00	0.00	5331.0	1235.60	0.00	0.00	5332.0	1235.60	0.00	0.00	5334.0
1235.70	0.00	0.00	5335.0	1235.80	0.00	0.00	5336.0	1236.30	0.00	0.00	5341.0
1236.30	0.00	0.00	5342.0	1236.00	0.00	0.00	5343.0	1236.10	0.00	0.00	5344.0
1236.00	0.00	0.00	5347.0	1236.00	0.00	0.00	5349.0	1236.10	0.00	0.00	5350.0
1236.20	0.00	0.00	5354.0	1236.30	0.00	0.00	5357.0	1236.60	0.00	0.00	5362.0
1236.70	0.00	0.00	5364.0	1236.90	0.00	0.00	5367.0	1237.00	0.00	0.00	5368.0
1237.10	0.00	0.00	5369.0	1237.10	0.00	0.00	5370.0	1237.20	0.00	0.00	5372.0
1237.90	0.00	0.00	5374.0	1238.30	0.00	0.00	5377.0	1238.60	0.00	0.00	5379.0
1238.90	0.00	0.00	5381.0	1239.00	0.00	0.00	5384.0	1239.30	0.00	0.00	5385.0
1240.40	0.00	0.00	5390.0	1241.24	0.00	0.04	5396.0	1243.42	0.00	-0.08	5399.0
1244.30	0.00	0.00	5401.0	1245.00	0.00	0.00	5404.0	1246.80	0.00	0.00	5408.0
1247.90	0.00	0.00	5411.0	1248.00	0.00	0.00	5411.2	1250.80	0.00	0.10	5417.0
1251.53	0.00	-0.17	5418.0	1253.50	0.00	0.00	5421.0	1254.30	0.00	0.00	5423.0
1256.00	0.00	0.00	5426.0								

ID
14 SECTION 1813.00 TIME = 69.20 HRS WS =1230.62 WIDTH = 222.7

Z	DZ	TDZ	Y	Z	DZ	TDZ	Y	Z	DZ	TDZ	Y
1239.00	0.00	0.00	471.0	1238.64	0.00	0.00	471.5	1238.00	0.00	0.00	473.7
1237.00	0.00	0.00	477.0	1236.00	0.00	0.00	480.0	1235.00	0.00	0.00	483.0
1234.00	0.00	0.00	486.0	1233.00	0.00	0.00	489.0	1232.00	0.00	0.00	492.0
1230.65	0.00	-0.35	495.7	1230.10	0.04	-0.70	497.0	1228.16	-0.01	-1.84	501.7
1228.79	-0.01	-0.21	524.4	1228.74	-0.01	0.74	530.8	1228.71	-0.02	1.71	534.9
1228.69	-0.02	2.68	538.0	1228.61	-0.02	2.89	549.4	1228.54	-0.02	2.54	560.7
1228.48	-0.02	1.47	566.8	1228.38	-0.02	0.38	581.1	1228.18	-0.03	-0.22	593.7
1228.23	-0.03	0.23	597.1	1228.07	-0.03	1.06	613.4	1227.21	-0.04	1.21	626.6
1227.05	-0.05	1.66	644.9	1227.18	-0.04	1.48	659.6	1227.73	-0.04	1.73	667.8
1228.17	-0.03	1.35	691.6	1229.38	-0.02	2.47	696.0	1230.46	0.00	3.45	707.5
1230.46	0.00	2.46	708.4	1230.46	0.00	1.46	713.5	1230.40	0.00	0.40	716.6
1230.52	0.04	0.06	718.0	1231.00	0.00	0.00	719.5	1232.00	0.00	0.00	725.2
1233.00	0.00	0.00	731.3	1234.00	0.00	0.00	739.1	1235.00	0.00	0.00	751.7
1235.00	0.00	0.00	762.0								

ID
13 SECTION 1760.00 TIME = 69.20 HRS WS =1229.81 WIDTH = 259.1

Z	DZ	TDZ	Y	Z	DZ	TDZ	Y	Z	DZ	TDZ	Y
1238.00	0.00	0.00	383.0	1237.94	0.00	0.00	383.2	1237.63	0.00	0.00	399.9
1237.63	0.00	0.00	401.9	1237.92	0.00	0.00	420.1	1238.20	0.00	0.00	438.4
1237.00	0.00	0.00	444.2	1236.00	0.00	0.00	447.2	1235.00	0.00	0.00	450.2
1234.00	0.00	0.00	453.2	1233.00	0.00	0.00	456.2	1232.00	0.00	0.00	459.2
1231.00	0.00	0.00	462.2	1229.80	0.08	-0.20	465.3	1228.89	0.02	-0.61	477.8
1228.72	0.02	-0.27	493.1	1228.70	0.02	0.69	499.1	1228.71	0.02	1.71	501.1
1228.70	0.02	2.70	504.6	1228.70	0.02	3.69	506.3	1228.67	0.02	3.97	512.1
1228.71	0.02	3.71	515.6	1228.73	0.02	3.63	517.4	1228.72	0.02	3.72	519.6
1228.67	0.02	3.89	523.7	1228.72	0.02	3.72	528.0	1228.70	0.02	2.70	531.1
1228.65	0.02	2.15	532.7	1228.70	0.02	2.50	535.8	1228.64	0.02	1.65	542.2
1228.72	0.02	1.06	557.2	1228.62	0.02	1.29	568.4	1228.72	0.02	1.72	580.0
1228.71	0.02	1.71	583.8	1228.68	0.02	1.68	585.2	1227.18	0.03	-0.34	599.7
1227.72	0.03	0.69	604.3	1227.09	0.03	-0.31	615.3	1226.43	0.04	-1.07	624.7
1225.57	0.04	-1.43	634.4	1225.21	0.05	-0.79	640.5	1225.00	0.05	-0.01	665.4
1224.95	0.05	0.94	673.6	1224.92	0.05	1.11	678.4	1227.18	0.03	3.38	681.8
1228.33	0.02	4.34	685.7	1228.60	0.02	3.59	692.1	1229.10	0.02	3.51	711.6
1229.05	0.02	4.05	714.2	1229.07	0.02	3.08	716.2	1229.05	0.02	2.05	720.9
1229.04	0.02	1.04	721.1	1229.29	0.08	0.29	721.8	1230.00	0.00	0.00	724.9
1231.00	0.00	0.00	728.1	1232.00	0.00	0.00	731.4	1233.00	0.00	0.00	734.6
1234.00	0.00	0.00	738.0	1235.00	0.00	0.00	743.6	1235.89	0.00	0.00	750.5
1235.56	0.00	0.00	768.7	1235.22	0.00	0.00	787.0	1234.89	0.00	0.00	805.2
1234.56	0.00	0.00	823.4								

ID
12 SECTION 1680.00 TIME = 69.20 HRS WS =1229.11 WIDTH = 266.8

Z	DZ	TDZ	Y	Z	DZ	TDZ	Y	Z	DZ	TDZ	Y
1235.10	0.00	0.00	1213.3	1235.04	0.00	0.00	1213.5	1234.81	0.00	0.00	1229.7
1234.82	0.00	0.00	1231.7	1234.00	0.00	0.00	1237.2	1233.00	0.00	0.00	1240.3
1232.00	0.00	0.00	1243.5	1231.00	0.00	0.00	1246.6	1230.00	0.00	0.00	1249.8
1229.00	0.00	0.00	1252.9	1228.21	0.01	0.21	1255.8	1226.76	0.02	-0.29	1259.5
1226.53	0.02	-0.47	1259.9	1223.91	0.02	-2.09	1265.3	1223.90	0.02	-1.09	1268.7
1223.90	0.02	-0.10	1269.8	1223.88	0.02	0.65	1282.1	1223.90	0.02	-0.10	1294.5
1223.91	0.02	-1.09	1301.1	1224.70	0.02	-0.91	1306.3	1224.88	0.02	-0.12	1310.9
1225.13	0.02	0.40	1317.5	1225.35	0.02	0.35	1324.4	1224.93	0.02	-1.07	1331.0
1225.64	0.02	-1.19	1334.1	1225.66	0.02	-0.94	1345.4	1226.40	0.02	0.39	1370.3
1226.60	0.02	1.05	1382.8	1226.74	0.02	0.73	1392.7	1226.75	0.02	-0.26	1394.5
1226.76	0.02	-0.36	1394.9	1226.76	0.02	-0.25	1395.2	1225.25	0.02	-1.42	1400.4
1226.88	0.02	-0.12	1408.1	1226.88	0.02	-0.23	1409.0	1227.03	0.01	0.02	1410.5
1228.11	0.01	2.10	1413.3	1228.14	0.01	2.50	1424.3	1228.17	0.01	2.17	1430.5
1228.28	0.01	1.49	1448.1	1228.31	0.01	2.30	1455.0	1228.32	0.01	3.31	1472.2
1228.33	0.01	4.32	1490.1	1228.33	0.01	5.03	1495.8	1228.34	0.01	5.03	1502.8
1228.34	0.01	4.33	1504.7	1228.34	0.01	3.34	1507.7	1228.39	0.01	2.39	1509.0
1228.57	0.01	1.56	1513.2	1228.61	0.01	0.61	1516.1	1229.00	0.00	0.00	1519.0
1230.00	0.00	0.00	1522.2	1230.00	0.00	0.00	1523.2	1230.00	0.00	0.00	1539.2
1230.00	0.00	0.00	1555.1	1231.00	0.00	0.00	1561.5	1232.00	0.00	0.00	1568.0
1233.00	0.00	0.00	1574.8	1234.00	0.00	0.00	1582.4	1235.00	0.00	0.00	1590.9

1235.09	0.00	0.00	1593.3	1234.67	0.00	0.00	1610.1	1234.25	0.00	0.00	1626.8
1233.84	0.00	0.00	1643.5	1233.42	0.00	0.00	1660.3	1233.00	0.00	0.00	1677.0
1232.00	0.00	0.00	1682.4	1231.00	0.00	0.00	1687.5	1230.00	0.00	0.00	1692.6
1230.00	0.00	0.00	1701.3	1230.40	0.00	0.00	1711.0	1230.30	0.00	0.00	1712.5
1230.28	0.00	0.00	1727.6	1230.26	0.00	0.00	1742.6				

ID
11 SECTION 1413.00 TIME = 69.20 HRS WS =1225.60 WIDTH = 308.7

Z	DZ	TDZ	Y	Z	DZ	TDZ	Y	Z	DZ	TDZ	Y
1231.80	0.00	0.00	957.0	1231.50	0.00	0.00	973.2	1231.46	0.00	0.00	975.2
1231.00	0.00	0.00	976.9	1230.00	0.00	0.00	980.0	1229.00	0.00	0.00	983.1
1228.00	0.00	0.00	986.2	1227.00	0.00	0.00	989.3	1226.00	0.00	0.00	992.3
1225.25	0.00	0.25	995.0	1224.98	0.00	0.38	995.6	1224.98	0.00	-0.02	1000.3
1224.37	-0.01	-0.81	1002.1	1222.67	-0.02	-2.33	1004.6	1222.62	-0.02	-1.38	1006.9
1220.73	-0.07	-2.27	1012.2	1220.68	-0.07	-1.33	1018.5	1220.60	-0.07	-0.41	1022.9
1220.47	-0.08	-0.33	1032.2	1222.59	-0.02	1.69	1043.4	1220.54	-0.07	-0.46	1059.7
1224.70	-0.01	2.70	1068.7	1220.78	-0.06	-1.41	1079.6	1224.80	-0.01	2.39	1097.3
1221.18	-0.05	-0.83	1105.6	1224.80	0.00	2.90	1133.8	1224.99	0.00	3.19	1151.5
1225.02	0.00	3.60	1162.4	1225.04	0.00	4.00	1173.4	1225.04	0.00	4.03	1177.2
1225.04	0.00	4.05	1181.2	1224.24	-0.01	2.24	1192.2	1223.90	-0.01	0.90	1193.6
1222.64	-0.01	-1.37	1195.7	1225.21	0.00	0.21	1207.8	1225.21	0.00	0.01	1210.6
1225.21	0.00	0.21	1214.6	1224.50	0.00	-0.16	1224.7	1225.15	0.00	0.85	1241.0
1225.14	0.00	1.14	1243.2	1225.16	0.00	1.26	1259.0	1225.19	0.00	1.49	1269.5
1225.20	0.00	1.69	1281.3	1225.20	0.00	2.20	1288.9	1225.23	0.00	3.13	1293.3
1225.23	0.00	2.23	1299.7	1225.51	0.00	1.51	1301.3	1225.68	0.00	0.68	1303.6
1226.00	0.00	0.00	1306.6	1226.30	0.00	0.00	1308.2	1226.32	0.00	0.00	1325.8
1226.33	0.00	0.00	1343.5	1226.35	0.00	0.00	1361.2	1226.37	0.00	0.00	1378.9
1226.38	0.00	0.00	1396.6	1226.40	0.00	0.00	1414.3	1226.55	0.00	0.00	1433.0
1226.70	0.00	0.00	1451.6	1226.85	0.00	0.00	1470.3	1227.00	0.00	0.00	1489.0

ID
10 SECTION 1165.00 TIME = 69.20 HRS WS =1222.80 WIDTH = 319.2

Z	DZ	TDZ	Y	Z	DZ	TDZ	Y	Z	DZ	TDZ	Y
1229.40	0.00	0.00	819.9	1229.05	0.00	0.00	835.9	1229.00	0.00	0.00	837.9
1229.00	0.00	0.00	838.1	1228.00	0.00	0.00	841.1	1227.00	0.00	0.00	844.1
1226.00	0.00	0.00	847.1	1225.00	0.00	0.00	850.1	1225.00	0.00	0.00	852.5
1225.00	0.00	0.00	855.2	1225.10	0.00	0.00	855.8	1225.00	0.00	0.00	856.4
1224.00	0.00	0.00	856.8	1223.00	0.00	0.00	857.0	1222.01	-0.03	0.01	857.4
1221.80	0.01	0.80	857.8	1221.44	0.01	1.44	858.3	1221.40	0.01	2.29	869.2
1221.38	0.01	2.03	883.9	1221.36	0.01	1.76	899.8	1221.34	0.01	2.34	918.3
1221.34	0.01	2.84	925.5	1221.33	0.01	2.34	940.3	1221.31	0.01	2.52	950.9
1221.30	0.01	2.70	961.5	1221.30	0.01	2.30	971.0	1221.29	0.01	2.19	972.8
1221.29	0.01	2.29	975.1	1221.30	0.01	2.40	976.8	1221.30	0.01	2.29	978.9
1221.28	0.01	2.07	985.7	1221.29	0.01	2.28	990.9	1221.28	0.01	2.38	993.2
1220.83	0.01	1.92	1001.3	1220.74	0.01	1.74	1002.0	1220.75	0.01	1.55	1003.6
1220.73	0.01	1.73	1006.8	1220.72	0.01	2.62	1009.8	1218.46	0.01	-0.09	1031.7
1218.64	0.01	-0.37	1055.5	1218.70	0.01	-0.80	1064.2	1218.74	0.01	-1.25	1075.7
1218.79	0.01	-1.71	1083.5	1218.97	0.01	-1.13	1088.9	1221.21	0.01	0.21	1099.7
1221.21	0.01	-0.79	1100.4	1221.21	0.01	-0.78	1101.3	1221.23	0.01	-0.27	1112.2
1221.23	0.01	0.23	1120.3	1221.23	0.01	1.24	1125.1	1221.25	0.01	1.75	1131.7
1221.25	0.01	1.25	1136.0	1221.25	0.01	0.26	1140.5	1221.25	0.01	0.02	1144.1
1221.27	0.01	0.27	1159.9	1221.28	0.01	0.47	1166.4	1221.44	0.01	0.44	1171.4
1222.01	-0.01	0.01	1174.0	1223.00	0.00	0.00	1176.9	1223.54	0.00	0.00	1178.5
1223.53	0.00	0.00	1197.0	1223.52	0.00	0.00	1215.5	1223.51	0.00	0.00	1234.0
1223.50	0.00	0.00	1252.5								

ID
9 SECTION 930.00 TIME = 69.20 HRS WS =1219.28 WIDTH = 283.9

Z	DZ	TDZ	Y	Z	DZ	TDZ	Y	Z	DZ	TDZ	Y
1227.20	0.00	0.00	628.2	1226.95	0.00	0.00	644.4	1227.00	0.00	0.00	646.4
1226.00	0.00	0.00	649.4	1225.00	0.00	0.00	652.4	1224.00	0.00	0.00	655.5
1223.00	0.00	0.00	658.5	1222.00	0.00	0.00	661.6	1220.91	0.00	-0.55	663.6
1217.85	0.02	-3.15	667.9	1217.81	0.00	-2.19	670.9	1217.81	0.00	-1.19	672.4
1217.81	0.00	-0.19	673.7	1217.81	0.00	0.81	687.6	1217.80	0.00	1.80	690.1
1217.80	0.00	2.50	697.4	1217.80	0.00	2.16	716.7	1217.80	0.00	1.82	735.8

1217.80	0.00	1.96	738.2	1217.79	0.00	2.09	756.0	1217.80	0.00	1.91	757.1
1217.78	-0.01	1.78	779.9	1217.78	-0.01	1.29	781.5	1217.78	-0.01	1.79	789.9
1217.77	-0.01	2.28	820.4	1215.76	-0.01	0.77	839.8	1215.77	-0.01	0.78	840.9
1216.91	-0.01	0.92	853.9	1216.91	-0.01	-0.08	856.8	1216.91	-0.01	-0.09	857.0
1216.91	-0.01	-0.09	857.2	1216.92	-0.01	0.12	870.7	1216.92	-0.01	0.32	884.3
1216.93	-0.01	0.53	898.3	1216.93	-0.01	0.23	911.6	1216.94	-0.01	-0.06	925.7
1216.94	-0.01	-1.06	934.6	1216.94	-0.01	-2.06	938.5	1216.99	0.00	-3.01	946.3
1219.65	0.00	-1.35	950.3	1221.20	0.00	0.00	956.2	1221.00	0.00	0.00	960.4
1220.99	0.00	0.00	961.5	1221.00	0.00	0.00	961.7	1221.64	0.00	0.00	964.2
1221.64	0.00	0.00	981.9	1221.64	0.00	0.00	999.7	1221.65	0.00	0.00	1017.4
1221.65	0.00	0.00	1035.2	1221.65	0.00	0.00	1052.9				

ID
8 SECTION 818.00 TIME = 69.20 HRS WS =1218.18 WIDTH = 307.3

Z	DZ	TDZ	Y	Z	DZ	TDZ	Y	Z	DZ	TDZ	Y
1225.10	0.00	0.00	0.0	1225.00	0.00	0.00	1.0	1224.00	0.00	0.00	4.1
1223.00	0.00	0.00	7.2	1222.00	0.00	0.00	10.4	1221.00	0.00	0.00	13.5
1220.92	0.00	0.00	13.8	1219.08	0.00	-0.92	22.3	1218.18	0.01	-0.82	23.9
1217.94	0.00	-0.06	24.8	1217.67	0.00	0.67	28.4	1217.22	0.00	0.30	33.6
1217.21	0.00	0.21	35.6	1217.21	0.00	0.01	37.2	1217.21	0.00	0.21	38.5
1217.21	0.00	0.31	40.9	1217.20	0.00	0.20	45.8	1217.19	0.00	-0.21	50.7
1217.19	0.00	0.19	55.0	1217.18	0.00	0.55	59.5	1217.18	0.00	0.18	62.0
1217.16	0.00	0.16	70.6	1217.16	0.00	1.16	71.7	1217.16	0.00	2.16	75.0
1217.13	0.00	3.00	94.3	1217.11	0.00	2.82	110.6	1217.08	0.00	2.63	129.9
1214.82	0.00	0.22	144.9	1214.60	0.00	-0.41	152.0	1214.51	0.00	-0.89	160.9
1214.45	0.00	-0.56	167.1	1214.44	0.00	0.44	167.5	1212.61	0.00	-0.88	184.6
1212.62	0.00	-1.38	190.3	1216.54	0.00	2.03	202.5	1216.59	0.00	1.59	217.5
1216.61	0.00	0.61	230.8	1216.62	0.00	0.59	233.3	1216.63	0.00	0.63	237.4
1216.70	0.00	1.15	251.8	1216.74	0.00	1.65	265.8	1216.74	0.00	1.63	273.3
1216.78	0.00	0.78	287.4	1216.83	0.00	0.32	300.5	1216.85	0.00	-0.15	314.1
1217.28	0.00	-0.72	327.3	1217.79	0.00	-1.21	329.8	1217.97	0.02	-1.21	330.8
1219.91	0.00	-0.09	333.8	1221.00	0.00	0.00	336.8	1221.20	0.00	0.00	338.3
1221.18	0.00	0.00	357.7	1221.17	0.00	0.00	377.2	1221.15	0.00	0.00	396.6
1221.14	0.00	0.00	416.1	1221.12	0.00	0.00	435.5				

ID
7 SECTION 611.00 TIME = 69.20 HRS WS =1216.48 WIDTH = 343.1

Z	DZ	TDZ	Y	Z	DZ	TDZ	Y	Z	DZ	TDZ	Y
1224.70	0.00	0.00	267.9	1224.49	0.00	0.00	285.2	1224.48	0.00	0.00	287.4
1224.00	0.00	0.00	288.8	1223.00	0.00	0.00	292.0	1222.00	0.00	0.00	295.2
1221.00	0.00	0.00	298.5	1220.00	0.00	0.00	301.7	1218.79	0.00	-0.21	304.9
1218.37	0.00	0.09	305.5	1217.57	0.00	-0.72	313.7	1216.48	-0.02	-1.52	315.2
1216.30	-0.01	-0.70	315.4	1215.78	0.01	-0.22	317.0	1215.66	0.01	0.66	320.1
1215.64	0.01	0.94	325.4	1215.44	0.01	0.44	336.4	1215.66	0.01	0.36	341.2
1215.65	0.01	0.24	354.8	1215.65	0.01	0.13	368.4	1213.91	0.01	-1.09	379.0
1215.31	0.01	1.31	394.2	1215.29	0.01	1.79	403.2	1215.27	0.01	2.28	407.7
1215.26	0.01	2.76	425.0	1215.23	0.01	3.23	442.8	1215.22	0.01	3.01	451.1
1213.34	0.01	1.34	456.2	1213.43	0.01	1.87	458.0	1213.82	0.01	1.82	463.6
1213.81	0.01	1.79	467.6	1213.79	0.01	2.29	469.4	1213.77	0.01	1.77	475.2
1213.67	0.01	1.62	485.3	1213.65	0.01	1.65	487.2	1213.60	0.01	2.09	493.3
1212.98	0.01	1.98	512.2	1210.44	0.02	-0.37	515.8	1210.25	0.02	-0.75	525.8
1211.99	0.02	-0.02	541.2	1212.00	0.02	-1.00	543.9	1211.51	0.02	-2.49	557.2
1213.25	0.01	-1.25	562.6	1212.21	0.02	-2.79	564.8	1215.13	0.01	-0.17	585.9
1215.14	0.01	0.14	593.8	1215.14	0.01	0.64	612.0	1215.16	0.01	1.16	626.9
1215.17	0.01	1.37	635.3	1215.17	0.01	1.17	644.5	1215.18	0.01	0.18	647.6
1215.18	0.01	0.04	651.3	1215.30	0.01	-0.71	654.7	1215.77	-0.01	-1.23	657.3
1217.37	-0.02	-0.63	659.5	1219.00	0.00	0.00	662.5	1220.00	0.00	0.00	666.2
1220.10	0.00	0.00	666.7	1220.00	0.00	0.00	685.5	1220.00	0.00	0.00	693.9
1219.90	0.00	0.00	707.4	1219.88	0.00	0.00	725.3	1219.85	0.00	0.00	743.2
1219.82	0.00	0.00	761.2	1219.80	0.00	0.00	779.1	1219.83	0.00	0.00	798.7
1219.87	0.00	0.00	818.3	1219.90	0.00	0.00	837.9	1219.93	0.00	0.00	857.5
1219.97	0.00	0.00	877.2	1220.00	0.00	0.00	896.8				

ID
6 SECTION 424.00 TIME = 69.20 HRS WS =1214.42 WIDTH = 172.2

Z	DZ	TDZ	Y	Z	DZ	TDZ	Y	Z	DZ	TDZ	Y

1224.00	0.00	0.00	163.6	1224.00	0.00	0.00	163.8	1224.00	0.00	0.00	166.8
1224.00	0.00	0.00	167.0	1224.00	0.00	0.00	183.1	1224.00	0.00	0.00	183.3
1224.00	0.00	0.00	198.0	1224.00	0.00	0.00	198.2	1224.00	0.00	0.00	207.4
1224.00	0.00	0.00	207.6	1224.00	0.00	0.00	208.7	1224.00	0.00	0.00	208.9
1221.00	0.00	0.00	209.6	1220.50	0.00	0.00	222.8	1220.00	0.00	0.00	236.0
1219.00	0.00	0.00	245.1	1218.10	0.00	0.00	251.6	1218.00	0.00	0.00	253.5
1218.00	0.00	0.00	271.0	1218.00	0.00	0.00	288.4	1218.00	0.00	0.00	290.5
1217.67	0.00	0.00	308.0	1217.33	0.00	0.00	325.6	1217.00	0.00	0.00	343.2
1217.00	0.00	0.00	361.2	1217.00	0.00	0.00	366.5	1216.00	0.00	0.00	383.7
1215.00	0.00	0.00	386.9	1214.38	0.00	0.29	396.3	1214.38	0.00	0.18	399.7
1214.23	0.00	0.24	405.6	1214.17	0.00	1.17	418.5	1214.06	0.00	2.06	429.0
1214.02	0.00	3.02	434.5	1213.98	0.00	3.48	447.0	1213.85	0.00	3.85	459.0
1213.77	0.00	3.87	459.5	1212.60	-0.01	2.60	465.3	1210.68	-0.01	0.03	468.0
1209.19	-0.01	-0.81	483.7	1208.72	0.00	-1.28	500.4	1208.70	0.00	-1.30	516.0
1208.70	0.00	-1.30	523.6	1208.70	0.00	-0.30	525.1	1208.70	0.00	-0.11	526.7
1208.69	-0.01	-0.12	541.4	1208.69	-0.01	-0.11	556.2	1209.00	0.00	0.00	556.4
1210.34	-0.01	0.33	560.2	1211.98	-0.01	0.98	562.5	1212.13	-0.01	0.13	562.7
1213.00	0.00	0.00	562.9	1214.19	0.00	0.19	567.1	1215.00	0.00	0.00	569.9
1216.00	0.00	0.00	572.8	1216.60	0.00	0.00	580.0	1216.53	0.00	0.00	586.0
1224.00	0.00	0.00	601.0								

ID
5 SECTION 398.00 TIME = 69.20 HRS WS =1213.52 WIDTH = 87.7

Z	DZ	TDZ	Y	Z	DZ	TDZ	Y	Z	DZ	TDZ	Y
1220.20	0.00	0.00	4623.0	1220.40	0.00	0.00	4625.0	1220.20	0.00	0.00	4626.0
1220.30	0.00	0.00	4627.0	1220.00	0.00	0.00	4632.0	1219.90	0.00	0.00	4634.0
1218.80	0.00	0.00	4638.0	1218.80	0.00	0.00	4644.0	1218.60	0.00	0.00	4645.0
1218.70	0.00	0.00	4648.0	1218.10	0.00	0.00	4649.0	1217.80	0.00	0.00	4651.0
1218.20	0.00	0.00	4663.0	1218.10	0.00	0.00	4666.0	1217.70	0.00	0.00	4667.0
1217.90	0.00	0.00	4669.0	1218.00	0.00	0.00	4674.0	1217.90	0.00	0.00	4676.0
1217.50	0.00	0.00	4680.0	1217.30	0.00	0.00	4681.0	1217.50	0.00	0.00	4683.0
1217.50	0.00	0.00	4687.0	1217.80	0.00	0.00	4690.0	1217.90	0.00	0.00	4694.0
1217.70	0.00	0.00	4695.0	1217.80	0.00	0.00	4697.0	1217.90	0.00	0.00	4700.0
1218.20	0.00	0.00	4702.0	1218.30	0.00	0.00	4703.0	1218.20	0.00	0.00	4705.0
1217.90	0.00	0.00	4709.0	1218.20	0.00	0.00	4712.0	1218.20	0.00	0.00	4715.0
1218.40	0.00	0.00	4718.0	1218.00	0.00	0.00	4721.0	1218.10	0.00	0.00	4728.0
1218.50	0.00	0.00	4732.0	1218.50	0.00	0.00	4733.0	1217.90	0.00	0.00	4736.0
1217.90	0.00	0.00	4738.0	1217.80	0.00	0.00	4739.0	1218.00	0.00	0.00	4741.0
1218.20	0.00	0.00	4743.0	1218.30	0.00	0.00	4750.0	1218.00	0.00	0.00	4752.0
1218.30	0.00	0.00	4755.0	1218.10	0.00	0.00	4758.0	1217.80	0.00	0.00	4759.0
1218.30	0.00	0.00	4763.0	1218.60	0.00	0.00	4764.0	1218.70	0.00	0.00	4766.0
1218.20	0.00	0.00	4767.0	1218.00	0.00	0.00	4769.0	1218.10	0.00	0.00	4770.0
1218.00	0.00	0.00	4777.0	1218.40	0.00	0.00	4780.0	1218.10	0.00	0.00	4781.0
1217.80	0.00	0.00	4784.0	1218.00	0.00	0.00	4786.0	1218.10	0.00	0.00	4788.0
1217.90	0.00	0.00	4792.0	1218.10	0.00	0.00	4794.0	1218.10	0.00	0.00	4795.0
1218.20	0.00	0.00	4800.0	1217.90	0.00	0.00	4807.0	1218.00	0.00	0.00	4812.0
1217.60	0.00	0.00	4819.0	1217.90	0.00	0.00	4824.0	1217.90	0.00	0.00	4825.0
1217.80	0.00	0.00	4827.0	1217.80	0.00	0.00	4831.0	1217.90	0.00	0.00	4832.0
1217.80	0.00	0.00	4835.0	1217.60	0.00	0.00	4838.0	1218.00	0.00	0.00	4842.0
1218.00	0.00	0.00	4843.0	1217.90	0.00	0.00	4844.0	1218.00	0.00	0.00	4857.0
1218.00	0.00	0.00	4858.0	1218.00	0.00	0.00	4858.2	1217.40	0.00	0.00	4868.0
1217.60	0.00	0.00	4870.0	1217.20	0.00	0.00	4873.0	1217.20	0.00	0.00	4874.0
1217.50	0.00	0.00	4878.0	1217.30	0.00	0.00	4879.0	1217.10	0.00	0.00	4881.0
1217.30	0.00	0.00	4882.0	1217.80	0.00	0.00	4886.0	1217.60	0.00	0.00	4889.0
1217.80	0.00	0.00	4892.0	1217.90	0.00	0.00	4896.0	1217.50	0.00	0.00	4900.0
1218.20	0.00	0.00	4902.0	1217.90	0.00	0.00	4905.0	1217.70	0.00	0.00	4909.0
1218.20	0.00	0.00	4917.0	1218.20	0.00	0.00	4921.0	1217.80	0.00	0.00	4927.0
1217.80	0.00	0.00	4932.0	1217.80	0.00	0.00	4933.0	1217.80	0.00	0.00	4934.0
1215.40	0.00	0.00	4940.0	1211.58	0.00	-0.02	4944.9	1210.21	-0.03	-0.59	4945.2
1208.02	-0.06	-3.28	4949.2	1208.02	-0.06	-3.28	4952.0	1208.02	-0.07	-3.18	4953.1
1208.02	-0.07	-3.08	4953.3	1208.01	-0.07	-1.68	4956.8	1208.00	-0.08	-1.99	4965.7
1208.00	-0.08	-2.09	4969.5	1207.99	-0.09	-1.50	4975.7	1207.99	-0.09	-1.51	4977.5
1207.99	-0.09	-1.51	4979.0	1207.99	-0.10	-1.72	4982.0	1207.98	-0.10	-1.62	4986.0
1207.98	-0.10	-1.72	4988.0	1207.98	-0.11	-1.52	4990.0	1207.97	-0.11	-1.83	4993.0
1207.97	-0.11	-1.72	4994.0	1207.97	-0.11	-1.73	4995.0	1207.97	-0.12	-1.54	4999.0
1207.96	-0.12	-1.24	5001.0	1207.96	-0.12	-0.93	5004.0	1207.97	-0.12	-1.14	5009.0
1207.97	-0.11	-1.44	5012.0	1207.97	-0.11	-1.23	5014.4	1207.97	-0.11	-1.13	5016.7
1210.20	-0.05	0.00	5023.3	1210.80	-0.05	0.00	5024.1	1210.79	-0.05	0.00	5025.4

1214.00	0.00	0.00	5031.0	1216.50	0.00	0.00	5038.0	1216.90	0.00	0.00	5040.0
1216.70	0.00	0.00	5042.0	1216.40	0.00	0.00	5048.0	1216.50	0.00	0.00	5049.0
1216.70	0.00	0.00	5050.0	1216.70	0.00	0.00	5054.0	1216.40	0.00	0.00	5059.0
1216.60	0.00	0.00	5060.0	1216.40	0.00	0.00	5062.0	1216.60	0.00	0.00	5064.0
1216.90	0.00	0.00	5067.0	1216.40	0.00	0.00	5075.0	1216.60	0.00	0.00	5078.0
1216.60	0.00	0.00	5079.0	1216.70	0.00	0.00	5081.0	1216.40	0.00	0.00	5085.0
1216.00	0.00	0.00	5089.0	1215.80	0.00	0.00	5097.0	1216.10	0.00	0.00	5099.0
1216.20	0.00	0.00	5102.0	1216.20	0.00	0.00	5107.6	1226.20	0.00	0.00	5127.6

ID
4 SECTION 352.00 TIME = 69.20 HRS WS =1213.31 WIDTH = 89.0

Z	DZ	TDZ	Y	Z	DZ	TDZ	Y	Z	DZ	TDZ	Y
1220.40	0.00	0.00	4618.0	1220.70	0.00	0.00	4623.0	1220.30	0.00	0.00	4626.0
1220.40	0.00	0.00	4628.0	1220.40	0.00	0.00	4630.0	1220.60	0.00	0.00	4631.0
1220.60	0.00	0.00	4635.0	1219.90	0.00	0.00	4637.0	1219.90	0.00	0.00	4638.0
1219.80	0.00	0.00	4641.0	1219.90	0.00	0.00	4644.0	1219.80	0.00	0.00	4645.0
1219.90	0.00	0.00	4646.0	1220.50	0.00	0.00	4647.0	1220.40	0.00	0.00	4648.0
1220.20	0.00	0.00	4652.0	1220.30	0.00	0.00	4653.0	1220.10	0.00	0.00	4654.0
1220.10	0.00	0.00	4658.0	1220.60	0.00	0.00	4659.0	1220.40	0.00	0.00	4661.0
1220.50	0.00	0.00	4662.0	1219.90	0.00	0.00	4664.0	1220.40	0.00	0.00	4669.0
1220.00	0.00	0.00	4673.0	1220.30	0.00	0.00	4678.0	1220.00	0.00	0.00	4683.0
1220.10	0.00	0.00	4684.0	1219.70	0.00	0.00	4688.0	1220.00	0.00	0.00	4690.0
1220.10	0.00	0.00	4691.0	1220.00	0.00	0.00	4693.0	1220.00	0.00	0.00	4695.0
1220.20	0.00	0.00	4696.0	1220.20	0.00	0.00	4697.0	1220.00	0.00	0.00	4698.0
1219.80	0.00	0.00	4704.0	1220.10	0.00	0.00	4711.0	1220.20	0.00	0.00	4713.0
1220.20	0.00	0.00	4714.0	1219.60	0.00	0.00	4719.0	1220.00	0.00	0.00	4727.0
1219.90	0.00	0.00	4728.0	1219.60	0.00	0.00	4730.0	1219.40	0.00	0.00	4731.0
1219.30	0.00	0.00	4733.0	1219.50	0.00	0.00	4738.0	1219.90	0.00	0.00	4741.0
1219.80	0.00	0.00	4744.0	1219.60	0.00	0.00	4746.0	1219.80	0.00	0.00	4748.0
1219.80	0.00	0.00	4751.0	1219.70	0.00	0.00	4753.0	1219.90	0.00	0.00	4759.0
1219.40	0.00	0.00	4762.0	1219.40	0.00	0.00	4763.0	1219.50	0.00	0.00	4770.0
1219.80	0.00	0.00	4773.0	1219.70	0.00	0.00	4774.0	1219.50	0.00	0.00	4776.0
1219.50	0.00	0.00	4778.0	1219.00	0.00	0.00	4781.0	1219.20	0.00	0.00	4783.0
1219.20	0.00	0.00	4785.0	1219.50	0.00	0.00	4789.0	1219.50	0.00	0.00	4790.0
1219.10	0.00	0.00	4793.0	1219.00	0.00	0.00	4797.0	1218.80	0.00	0.00	4799.0
1219.30	0.00	0.00	4803.0	1219.20	0.00	0.00	4804.0	1219.40	0.00	0.00	4805.0
1219.40	0.00	0.00	4807.0	1219.30	0.00	0.00	4808.0	1218.80	0.00	0.00	4815.0
1218.80	0.00	0.00	4816.0	1219.30	0.00	0.00	4822.0	1219.20	0.00	0.00	4824.0
1219.20	0.00	0.00	4826.0	1219.00	0.00	0.00	4830.0	1218.70	0.00	0.00	4832.0
1218.70	0.00	0.00	4833.0	1218.90	0.00	0.00	4840.0	1218.80	0.00	0.00	4843.0
1218.60	0.00	0.00	4845.0	1218.80	0.00	0.00	4847.0	1218.40	0.00	0.00	4851.0
1218.60	0.00	0.00	4853.0	1218.60	0.00	0.00	4859.0	1218.10	0.00	0.00	4865.0
1218.20	0.00	0.00	4866.0	1218.20	0.00	0.00	4867.0	1218.70	0.00	0.00	4873.0
1218.70	0.00	0.00	4876.0	1218.20	0.00	0.00	4881.0	1218.70	0.00	0.00	4890.0
1218.60	0.00	0.00	4893.0	1218.30	0.00	0.00	4896.0	1218.60	0.00	0.00	4898.0
1218.20	0.00	0.00	4901.0	1218.30	0.00	0.00	4907.0	1218.10	0.00	0.00	4909.0
1218.10	0.00	0.00	4911.0	1217.90	0.00	0.00	4912.0	1217.90	0.00	0.00	4916.0
1216.80	0.00	0.00	4922.0	1216.30	0.00	0.00	4929.0	1214.50	0.00	0.00	4932.0
1213.50	0.00	0.00	4939.0	1212.90	0.00	0.00	4940.3	1210.80	0.00	0.00	4945.4
1210.80	0.00	0.00	4945.6	1210.20	0.00	0.00	4950.3	1207.63	0.05	-3.17	4952.1
1207.63	0.08	-2.88	4955.2	1207.63	0.14	-1.78	4962.6	1207.63	0.19	-1.57	4969.0
1207.63	0.22	-1.67	4973.0	1207.63	0.27	-0.97	4979.0	1207.63	0.28	-1.17	4981.0
1207.63	0.28	-1.57	4988.0	1207.63	0.28	-1.28	4991.0	1207.63	0.28	-0.98	4994.0
1207.63	0.28	-1.08	4998.0	1207.63	0.28	-0.98	4999.0	1207.63	0.28	-1.28	5000.0
1207.63	0.28	-1.28	5002.0	1207.63	0.28	-0.78	5008.0	1207.63	0.28	-1.18	5015.0
1207.63	0.28	-1.67	5019.0	1207.63	0.28	-1.67	5020.9	1207.63	0.28	-1.97	5021.7
1207.63	0.28	-4.27	5021.9	1212.50	0.00	0.00	5025.0	1215.10	0.00	0.00	5036.0
1215.50	0.00	0.00	5038.0	1215.50	0.00	0.00	5039.0	1216.00	0.00	0.00	5040.0
1216.30	0.00	0.00	5046.0	1216.30	0.00	0.00	5047.0	1216.30	0.00	0.00	5048.0
1216.60	0.00	0.00	5050.0	1215.40	0.00	0.00	5054.0	1215.50	0.00	0.00	5055.0
1215.70	0.00	0.00	5056.0	1216.00	0.00	0.00	5058.0	1216.80	0.00	0.00	5061.0
1216.70	0.00	0.00	5064.0	1217.30	0.00	0.00	5066.0	1217.30	0.00	0.00	5067.0
1217.30	0.00	0.00	5072.0	1217.10	0.00	0.00	5076.0				

ID
3 SECTION 339.00 TIME = 69.20 HRS WS =1213.26 WIDTH = 98.3

Z	DZ	TDZ	Y	Z	DZ	TDZ	Y	Z	DZ	TDZ	Y

1220.90	0.00	0.00	4621.0	1220.90	0.00	0.00	4622.0	1220.10	0.00	0.00	4634.0
1220.10	0.00	0.00	4635.0	1220.80	0.00	0.00	4640.0	1220.80	0.00	0.00	4643.0
1220.60	0.00	0.00	4646.0	1220.30	0.00	0.00	4647.0	1220.60	0.00	0.00	4649.0
1220.70	0.00	0.00	4652.0	1220.30	0.00	0.00	4656.0	1220.70	0.00	0.00	4657.0
1220.40	0.00	0.00	4662.0	1220.70	0.00	0.00	4667.0	1220.30	0.00	0.00	4668.0
1220.40	0.00	0.00	4672.0	1219.90	0.00	0.00	4676.0	1220.00	0.00	0.00	4677.0
1220.00	0.00	0.00	4677.2	1220.40	0.00	0.00	4681.0	1219.80	0.00	0.00	4686.0
1220.40	0.00	0.00	4690.0	1220.20	0.00	0.00	4694.0	1220.30	0.00	0.00	4695.0
1220.40	0.00	0.00	4698.0	1219.90	0.00	0.00	4702.0	1219.60	0.00	0.00	4703.0
1219.80	0.00	0.00	4704.0	1220.20	0.00	0.00	4706.0	1220.00	0.00	0.00	4707.0
1220.00	0.00	0.00	4709.0	1219.80	0.00	0.00	4710.0	1219.70	0.00	0.00	4713.0
1220.20	0.00	0.00	4715.0	1219.90	0.00	0.00	4718.0	1219.75	0.00	0.00	4731.5
1219.60	0.00	0.00	4745.0	1220.10	0.00	0.00	4748.0	1219.90	0.00	0.00	4749.0
1220.10	0.00	0.00	4751.0	1220.00	0.00	0.00	4756.0	1219.40	0.00	0.00	4762.0
1220.00	0.00	0.00	4767.0	1219.80	0.00	0.00	4769.0	1220.00	0.00	0.00	4770.0
1219.70	0.00	0.00	4776.0	1220.00	0.00	0.00	4781.0	1219.90	0.00	0.00	4782.0
1220.00	0.00	0.00	4784.0	1219.70	0.00	0.00	4790.0	1220.10	0.00	0.00	4795.0
1220.00	0.00	0.00	4796.0	1219.60	0.00	0.00	4798.0	1219.90	0.00	0.00	4801.0
1219.70	0.00	0.00	4809.0	1219.40	0.00	0.00	4815.0	1220.00	0.00	0.00	4819.0
1219.50	0.00	0.00	4827.0	1219.80	0.00	0.00	4831.0	1219.30	0.00	0.00	4834.0
1219.80	0.00	0.00	4836.0	1219.10	0.00	0.00	4844.0	1219.20	0.00	0.00	4845.0
1218.90	0.00	0.00	4850.0	1219.60	0.00	0.00	4855.0	1218.80	0.00	0.00	4862.0
1219.30	0.00	0.00	4866.0	1219.30	0.00	0.00	4867.0	1219.50	0.00	0.00	4869.0
1219.20	0.00	0.00	4877.0	1219.00	0.00	0.00	4882.0	1219.40	0.00	0.00	4885.0
1219.30	0.00	0.00	4888.0	1218.80	0.00	0.00	4893.0	1219.00	0.00	0.00	4898.0
1218.80	0.00	0.00	4899.0	1219.00	0.00	0.00	4903.0	1218.70	0.00	0.00	4904.0
1218.50	0.00	0.00	4909.0	1218.20	0.00	0.00	4911.0	1218.30	0.00	0.00	4916.0
1217.80	0.00	0.00	4921.0	1216.30	0.00	0.00	4927.0	1216.20	0.00	0.00	4928.0
1216.30	0.00	0.00	4930.0	1215.90	0.00	0.00	4931.0	1214.80	0.00	0.00	4934.0
1214.40	0.00	0.00	4936.0	1213.06	0.00	0.05	4939.0	1211.70	0.00	0.00	4943.2
1211.53	-0.01	0.03	4943.4	1210.70	0.00	0.00	4948.5	1209.71	0.00	0.00	4956.0
1207.50	-0.03	-2.21	4960.5	1207.49	-0.03	-1.71	4967.0	1207.49	-0.03	-0.91	4969.0
1207.48	-0.04	-1.42	4975.0	1207.48	-0.04	-1.42	4976.0	1207.48	-0.04	-1.42	4978.0
1207.48	-0.04	-1.42	4980.0	1207.48	-0.04	-1.12	4982.0	1207.47	-0.04	-1.02	4986.0
1207.47	-0.04	-1.23	4988.0	1207.47	-0.05	-1.23	4994.0	1207.46	-0.05	-1.43	4997.0
1207.46	-0.05	-1.44	4998.0	1207.46	-0.05	-1.14	5003.0	1207.46	-0.05	-0.94	5007.0
1207.46	-0.05	-1.14	5009.0	1207.46	-0.05	-1.24	5010.0	1207.47	-0.04	-1.23	5019.0
1207.48	-0.04	-1.92	5025.9	1207.48	-0.04	-2.23	5028.7	1207.48	-0.04	-2.42	5028.9
1210.00	0.00	0.00	5029.3	1209.90	0.00	0.00	5029.5	1210.20	0.00	0.00	5029.7
1212.52	-0.01	0.02	5034.9	1214.10	0.00	0.00	5039.0	1215.60	0.00	0.00	5046.0
1215.40	0.00	0.00	5047.0	1216.60	0.00	0.00	5055.0	1217.20	0.00	0.00	5058.0
1217.20	0.00	0.00	5062.0	1217.60	0.00	0.00	5072.0	1217.40	0.00	0.00	5074.0
1217.50	0.00	0.00	5076.0	1217.80	0.00	0.00	5078.0				

ID
2 SECTION 218.00 TIME = 69.20 HRS WS =1212.35 WIDTH = 104.7

Z	DZ	TDZ	Y	Z	DZ	TDZ	Y	Z	DZ	TDZ	Y
1221.30	0.00	0.00	4621.0	1221.10	0.00	0.00	4623.0	1221.00	0.00	0.00	4624.0
1221.00	0.00	0.00	4625.0	1220.90	0.00	0.00	4631.0	1221.00	0.00	0.00	4632.0
1221.30	0.00	0.00	4634.0	1221.20	0.00	0.00	4636.0	1221.40	0.00	0.00	4638.0
1220.90	0.00	0.00	4643.0	1221.30	0.00	0.00	4647.0	1220.80	0.00	0.00	4657.0
1220.80	0.00	0.00	4658.0	1221.30	0.00	0.00	4664.0	1220.70	0.00	0.00	4674.0
1220.90	0.00	0.00	4675.0	1221.20	0.00	0.00	4680.0	1221.20	0.00	0.00	4683.0
1220.40	0.00	0.00	4690.0	1220.70	0.00	0.00	4692.0	1220.90	0.00	0.00	4697.0
1220.80	0.00	0.00	4699.0	1220.80	0.00	0.00	4700.0	1220.40	0.00	0.00	4707.0
1220.80	0.00	0.00	4712.0	1220.90	0.00	0.00	4718.0	1220.40	0.00	0.00	4723.0
1220.80	0.00	0.00	4729.0	1220.90	0.00	0.00	4731.0	1220.70	0.00	0.00	4733.0
1220.80	0.00	0.00	4734.0	1220.20	0.00	0.00	4739.0	1220.60	0.00	0.00	4745.0
1220.50	0.00	0.00	4750.0	1220.70	0.00	0.00	4751.0	1220.20	0.00	0.00	4754.0
1220.60	0.00	0.00	4762.0	1220.20	0.00	0.00	4766.0	1220.20	0.00	0.00	4768.0
1220.10	0.00	0.00	4769.0	1220.00	0.00	0.00	4773.0	1220.70	0.00	0.00	4777.0
1220.00	0.00	0.00	4784.0	1220.10	0.00	0.00	4786.0	1220.40	0.00	0.00	4787.0
1219.90	0.00	0.00	4789.0	1220.40	0.00	0.00	4792.0	1219.90	0.00	0.00	4802.0
1219.90	0.00	0.00	4804.0	1220.50	0.00	0.00	4807.0	1220.20	0.00	0.00	4810.0
1220.10	0.00	0.00	4812.0	1219.80	0.00	0.00	4815.0	1220.10	0.00	0.00	4818.0
1220.00	0.00	0.00	4819.0	1220.20	0.00	0.00	4821.0	1220.40	0.00	0.00	4822.0
1219.20	0.00	0.00	4826.0	1219.90	0.00	0.00	4837.0	1219.20	0.00	0.00	4845.0
1219.30	0.00	0.00	4846.0	1219.70	0.00	0.00	4852.0	1219.90	0.00	0.00	4853.0
1219.50	0.00	0.00	4854.0	1219.30	0.00	0.00	4855.0	1219.40	0.00	0.00	4863.0

1219.20	0.00	0.00	4865.0	1219.10	0.00	0.00	4869.0	1219.10	0.00	0.00	4870.0
1218.70	0.00	0.00	4874.0	1218.80	0.00	0.00	4881.0	1219.20	0.00	0.00	4882.0
1219.20	0.00	0.00	4901.5	1219.20	0.00	0.00	4921.0	1217.50	0.00	0.00	4936.0
1216.70	0.00	0.00	4940.0	1215.40	0.00	0.00	4943.0	1214.70	0.00	0.00	4943.2
1214.10	0.00	0.00	4945.0	1210.56	0.00	0.06	4954.9	1210.11	0.00	0.01	4956.8
1209.71	0.00	0.01	4957.0	1209.39	0.00	1.49	4957.2	1207.32	0.00	-0.08	4978.0
1206.95	0.00	-0.15	4981.0	1206.83	0.00	-0.27	4986.0	1206.83	0.00	-0.48	4987.0
1206.82	0.00	-0.58	4989.0	1206.82	0.00	-0.28	4995.0	1206.82	0.00	-0.29	4998.0
1206.82	0.00	-0.19	5001.0	1206.82	0.00	-0.69	5004.0	1206.82	0.00	-0.59	5007.0
1206.82	0.00	-0.28	5010.0	1206.82	0.00	-0.28	5012.0	1206.83	0.00	-1.18	5016.0
1206.83	0.00	-0.88	5017.6	1207.67	0.00	-0.94	5042.2	1210.42	0.00	2.22	5050.8
1210.47	0.00	0.06	5051.1	1212.60	0.00	0.00	5055.0	1215.30	0.00	0.00	5064.0
1216.90	0.00	0.00	5072.0	1217.00	0.00	0.00	5072.2	1217.00	0.00	0.00	5074.0
1217.40	0.00	0.00	5079.0	1217.20	0.00	0.00	5080.0	1217.30	0.00	0.00	5083.0
1217.10	0.00	0.00	5086.0	1217.30	0.00	0.00	5087.0	1217.20	0.00	0.00	5090.0
1217.60	0.00	0.00	5093.0	1217.90	0.00	0.00	5095.0	1217.90	0.00	0.00	5096.0
1217.40	0.00	0.00	5099.0	1217.70	0.00	0.00	5104.0	1217.50	0.00	0.00	5105.0
1217.80	0.00	0.00	5110.0	1217.80	0.00	0.00	5111.0	1217.70	0.00	0.00	5119.0
1217.80	0.00	0.00	5121.0	1217.50	0.00	0.00	5124.0	1217.80	0.00	0.00	5128.0
1217.30	0.00	0.00	5137.0	1217.50	0.00	0.00	5138.0	1217.90	0.00	0.00	5149.0
1217.40	0.00	0.00	5154.0	1217.30	0.00	0.00	5160.0	1217.50	0.00	0.00	5166.0
1217.00	0.00	0.00	5169.0	1216.80	0.00	0.00	5180.0	1217.30	0.00	0.00	5185.0
1217.20	0.00	0.00	5191.0	1217.10	0.00	0.00	5192.0	1216.90	0.00	0.00	5197.0
1216.60	0.00	0.00	5199.0	1216.50	0.00	0.00	5200.0	1216.90	0.00	0.00	5203.0
1216.10	0.00	0.00	5209.0	1216.60	0.00	0.00	5222.0	1216.40	0.00	0.00	5223.0

TIME = 150.12 HRS DT = 30 SECS TIME STEP = 24000

SECTION	W.S.ELEV. FT	WIDTH FT	DEPTH FT	Q CFS	V FPS	SLOPE	D50 MM	QS/Q 1000 PPM	FR	SED. YIELD TONS
137.000	1207.40	65.6	1.40	204	3.79	0.013531	0.88	11.53	0.73	0.185E+06
218.000	1208.50	82.1	1.35	204	3.43	0.013106	0.74	5.96	0.71	0.194E+06
339.000	1210.17	77.8	1.26	204	3.63	0.014705	0.66	15.00	0.75	0.195E+06
352.000	1210.27	70.6	1.24	204	3.56	0.012546	1.02	8.20	0.70	0.196E+06
398.000	1210.78	78.5	1.61	204	2.81	0.006334	0.76	2.42	0.51	0.200E+06
424.000	1210.97	99.2	1.88	204	2.34	0.004709	0.87	3.59	0.44	0.200E+06
611.000	1212.95	155.5	1.55	204	3.30	0.026879	0.93	16.27	0.92	0.202E+06
818.000	1215.65	97.2	0.69	204	3.53	0.018020	0.92	12.81	0.81	0.204E+06
930.000	1217.25	95.9	1.45	204	2.89	0.009050	1.07	7.48	0.59	0.206E+06
1165.000	1220.13	80.6	1.39	204	3.63	0.015410	0.90	12.22	0.77	0.210E+06
1413.000	1222.85	141.8	1.64	204	2.36	0.007758	0.82	5.90	0.53	0.218E+06
1680.000	1225.84	49.1	1.42	204	4.60	0.017498	0.94	24.31	0.85	0.223E+06
1760.000	1226.98	114.2	2.41	204	2.45	0.006610	0.92	1.76	0.50	0.226E+06
1813.000	1227.27	89.7	1.94	204	2.31	0.003939	0.98	2.38	0.41	0.227E+06
1941.000	1228.28	67.1	0.96	204	4.24	0.020159	0.93	20.93	0.88	0.227E+06
2243.000	1232.37	100.5	1.13	204	2.73	0.008015	0.98	7.58	0.56	0.223E+06
2634.000	1237.37	82.0	0.85	204	3.97	0.021243	0.91	20.53	0.88	0.218E+06
2960.000	1241.68	106.6	1.17	204	2.63	0.007638	0.88	7.13	0.54	0.217E+06
3361.000	1246.54	104.9	1.01	204	3.57	0.020677	0.98	14.53	0.85	0.218E+06
3706.000	1250.93	86.5	1.26	204	2.85	0.007538	1.04	7.37	0.55	0.220E+06
3785.000	1251.60	56.6	1.17	204	3.72	0.010844	0.85	7.49	0.67	0.222E+06
3814.000	1251.98	70.7	1.12	204	3.47	0.011345	0.90	7.98	0.67	0.223E+06
3845.000	1252.35	109.3	1.75	204	2.39	0.005733	1.06	3.44	0.48	0.224E+06
3922.000	1252.90	65.1	1.07	204	3.64	0.011791	0.88	8.33	0.69	0.223E+06
4001.000	1253.81	54.3	1.10	204	3.70	0.009799	0.85	6.48	0.65	0.223E+06
4158.000	1255.59	66.3	1.21	204	3.63	0.012006	0.89	7.30	0.69	0.223E+06
4334.000	1257.71	52.6	1.38	204	4.02	0.012382	0.98	9.23	0.72	0.224E+06
4579.000	1260.76	51.9	1.10	204	4.06	0.012516	1.13	9.10	0.73	0.220E+06
4974.000	1266.19	97.3	1.11	204	3.31	0.014535	0.83	7.30	0.73	0.218E+06
5474.000	1273.54	59.9	1.78	204	4.07	0.015404	1.23	12.33	0.78	0.215E+06
5702.000	1277.16	188.2	1.26	204	2.53	0.014452	0.73	6.09	0.68	0.208E+06
5930.000	1280.09	111.8	1.11	204	2.97	0.012227	0.69	6.19	0.67	0.208E+06
6083.000	1282.03	91.5	1.71	204	3.22	0.012626	0.86	8.04	0.68	0.209E+06
6350.000	1285.27	182.0	2.43	204	2.37	0.011097	0.84	3.76	0.61	0.213E+06
6406.000	1285.68	116.1	2.02	204	2.19	0.004611	0.88	3.02	0.43	0.220E+06
6463.000	1286.07	92.6	1.15	204	3.57	0.017451	0.93	8.38	0.80	0.224E+06
6822.000	1289.67	70.9	3.06	204	4.16	0.021294	1.28	15.68	0.88	0.223E+06
7036.000	1293.57	150.7	0.70	204	3.30	0.025741	1.04	13.42	0.90	0.216E+06
7171.000	1295.17	142.7	1.99	204	3.47	0.028601	1.42	15.70	0.95	0.212E+06
7182.000	1295.27	156.2	1.13	204	3.03	0.020484	1.05	11.67	0.81	0.213E+06
7220.000	1295.81	90.7	1.06	204	3.00	0.009622	0.73	3.53	0.61	0.212E+06
7462.000	1298.49	92.5	1.14	204	3.24	0.012777	0.69	8.35	0.69	0.210E+06
7674.000	1300.93	83.8	1.06	204	3.24	0.011237	0.80	8.82	0.66	0.210E+06
7835.000	1302.75	84.1	1.42	204	3.22	0.011043	0.87	0.43	0.65	0.210E+06
7977.000	1304.36	95.5	1.80	204	2.96	0.010050	0.87	13.27	0.61	0.209E+06
8156.000	1306.64	123.2	1.01	204	3.11	0.016723	0.73	13.61	0.75	0.205E+06
8333.000	1309.53	247.7	1.09	204	2.22	0.013387	0.90	2.19	0.64	0.198E+06
8661.000	1314.24	84.0	1.03	204	3.58	0.015763	0.88	5.66	0.76	0.194E+06
9076.000	1320.42	130.3	1.17	204	2.89	0.013686	0.82	17.29	0.69	0.195E+06
9389.000	1324.23	144.4	2.41	204	3.19	0.022097	0.81	18.13	0.84	0.204E+06
9468.000	1325.74	138.6	1.86	204	2.80	0.013652	0.82	2.60	0.68	0.208E+06
9503.000	1325.84	96.0	1.63	204	3.55	0.018188	0.82	12.53	0.81	0.208E+06
9595.000	1326.14	92.5	1.57	204	3.56	0.018290	0.83	12.39	0.80	0.207E+06
9885.000	1329.98	44.2	2.10	204	3.85	0.009310	0.97	15.31	0.62	0.205E+06
10056.000	1331.18	44.2	2.43	204	5.17	0.024482	1.13	33.23	0.96	0.202E+06
10178.000	1333.78	114.5	1.49	204	2.90	0.011831	1.01	11.60	0.65	0.197E+06
10196.000	1333.88	79.1	1.45	204	3.99	0.020825	0.87	18.15	0.87	0.196E+06
10219.000	1333.98	57.0	1.24	204	4.31	0.017754	0.93	18.09	0.83	0.196E+06
10593.000	1340.26	155.2	2.93	204	2.73	0.014570	0.94	13.93	0.69	0.199E+06
10871.000	1344.20	170.0	2.35	204	3.35	0.032766	0.96	20.39	0.98	0.198E+06
10947.000	1344.50	68.0	1.81	204	4.39	0.023649	1.24	18.87	0.93	0.200E+06
11004.000	1344.90	33.5	1.58	204	5.47	0.019619	1.88	20.28	0.91	0.197E+06
11267.000	1349.25	56.3	1.70	204	3.90	0.012856	1.81	8.01	0.71	0.194E+06
11543.000	1352.27	93.0	1.75	204	2.84	0.008472	0.98	1.07	0.57	0.209E+06
11783.000	1354.98	92.7	1.31	204	3.42	0.015453	1.66	6.70	0.75	0.211E+06

12094.000	1359.22	76.6	1.51	204	3.35	0.011999	1.19	5.65	0.66	0.207E+06
12370.000	1363.08	114.8	2.22	204	3.18	0.016630	2.00	6.06	0.75	0.219E+06
12657.000	1367.24	202.5	1.50	204	2.32	0.012064	0.71	4.44	0.62	0.225E+06
12784.000	1368.50	139.0	1.50	204	2.61	0.010564	0.72	4.34	0.61	0.224E+06
12997.000	1370.62	199.8	1.36	204	2.07	0.008016	0.75	5.50	0.52	0.223E+06
13357.000	1374.48	30.4	1.46	204	5.25	0.014730	0.85	14.27	0.82	0.221E+06
13392.000	1375.08	36.0	1.40	204	5.39	0.019844	1.04	32.51	0.93	0.221E+06
13427.000	1375.75	32.7	1.91	204	3.88	0.005956	1.21	8.58	0.54	0.220E+06
13781.000	1380.55	93.6	1.77	204	4.13	0.029586	0.82	38.85	1.00	0.226E+06
14059.000	1383.92	39.2	1.78	204	3.36	0.004638	0.70	7.70	0.47	0.241E+06
14339.000	1386.27	37.0	1.31	204	5.23	0.018605	0.71	44.92	0.90	0.250E+06
14524.000	1388.77	41.8	1.62	204	3.84	0.007861	0.59	0.12	0.60	0.261E+06
14687.000	1390.11	31.6	2.61	204	4.42	0.008839	0.87	20.78	0.64	0.269E+06

ID
17 SECTION 2634.00 TIME = 150.12 HRS WS =1237.37 WIDTH = 82.0

Z	DZ	TDZ	Y	Z	DZ	TDZ	Y	Z	DZ	TDZ	Y
1243.90	0.00	0.00	4926.0	1243.90	0.00	0.00	4928.0	1240.90	0.00	-3.30	4931.0
1239.55	0.00	-4.34	4932.3	1239.07	0.00	-4.53	4932.8	1238.34	0.00	-4.76	4933.6
1238.06	0.00	-4.45	4934.6	1237.41	0.00	-3.12	4937.4	1237.41	0.00	-2.12	4945.6
1237.41	0.00	-2.12	4949.0	1237.41	0.00	-2.22	4950.9	1237.41	0.00	-2.22	4952.4
1237.41	0.00	-2.01	4953.7	1237.40	0.00	-1.71	4957.6	1237.40	0.00	-1.61	4958.7
1237.41	0.00	-1.61	4959.2	1237.41	0.00	-1.50	4961.9	1237.40	0.00	-1.40	4963.0
1237.41	0.00	-1.40	4964.6	1237.41	0.00	-0.90	4966.2	1237.40	0.00	-0.40	4967.9
1237.40	0.00	0.20	4970.3	1237.41	0.00	0.31	4974.1	1237.40	0.00	0.30	4975.0
1237.32	0.00	0.32	4978.0	1237.27	0.00	0.27	4979.0	1237.19	0.00	0.18	4981.0
1237.04	0.00	0.73	4983.9	1236.90	0.00	0.90	4986.6	1236.84	0.00	1.04	4987.7
1236.77	0.00	1.78	4990.4	1236.75	0.00	2.16	4993.0	1236.73	0.00	2.53	4996.0
1236.70	0.00	2.29	4999.0	1236.68	0.00	2.28	5001.0	1236.65	0.00	2.35	5004.0
1236.63	0.00	2.23	5006.0	1236.57	0.00	2.09	5011.0	1236.56	0.00	2.28	5012.0
1236.52	0.00	2.22	5016.0	1236.51	0.00	3.41	5017.0	1236.51	0.00	3.42	5026.0
1236.53	0.00	2.25	5028.2	1236.59	0.00	-0.70	5033.1	1236.61	0.00	-2.68	5035.7
1236.63	0.00	-3.66	5037.2	1236.68	0.00	-4.61	5042.3	1236.71	0.00	-5.68	5045.6
1236.75	0.00	-5.95	5049.4	1237.19	0.00	-7.91	5057.7	1237.81	0.00	-7.50	5060.0
1238.48	0.00	-7.01	5060.9	1239.06	0.00	-6.14	5061.7	1239.57	0.00	-5.73	5062.4
1240.74	0.00	-4.86	5064.0	1241.47	0.00	-3.93	5065.0	1242.20	0.00	-2.71	5066.0
1244.10	0.00	0.00	5071.0	1243.20	0.00	0.00	5075.0	1242.80	0.00	0.00	5077.0
1243.40	0.00	0.00	5081.0	1243.70	0.00	0.00	5085.0	1243.50	0.00	0.00	5088.0
1243.50	0.00	0.00	5091.0	1243.50	0.00	0.00	5092.0	1243.50	0.00	0.00	5093.0
1243.40	0.00	0.00	5097.0	1243.50	0.00	0.00	5098.0	1243.30	0.00	0.00	5100.0
1243.30	0.00	0.00	5103.0	1243.40	0.00	0.00	5105.0	1243.20	0.00	0.00	5106.0
1243.10	0.00	0.00	5107.0	1243.20	0.00	0.00	5113.0	1243.30	0.00	0.00	5118.0
1243.30	0.00	0.00	5121.0	1243.20	0.00	0.00	5128.0	1243.20	0.00	0.00	5129.0
1243.30	0.00	0.00	5132.0	1243.60	0.00	0.00	5135.0	1243.30	0.00	0.00	5138.0
1243.50	0.00	0.00	5142.0	1243.40	0.00	0.00	5144.0	1243.40	0.00	0.00	5146.0
1243.50	0.00	0.00	5149.0	1243.50	0.00	0.00	5151.0	1243.40	0.00	0.00	5155.0
1243.40	0.00	0.00	5157.0	1243.30	0.00	0.00	5159.0	1243.20	0.00	0.00	5163.0
1243.20	0.00	0.00	5165.0	1243.20	0.00	0.00	5166.0	1243.30	0.00	0.00	5170.0
1243.20	0.00	0.00	5171.0	1243.30	0.00	0.00	5172.0	1243.30	0.00	0.00	5174.0
1243.10	0.00	0.00	5180.0	1243.10	0.00	0.00	5181.0	1243.10	0.00	0.00	5183.0
1243.40	0.00	0.00	5187.0	1243.40	0.00	0.00	5188.0	1243.40	0.00	0.00	5191.0
1243.40	0.00	0.00	5193.0	1243.30	0.00	0.00	5195.0	1243.40	0.00	0.00	5197.0
1243.40	0.00	0.00	5198.0	1243.40	0.00	0.00	5201.0	1243.20	0.00	0.00	5204.0
1243.20	0.00	0.00	5205.0	1243.20	0.00	0.00	5208.0	1243.30	0.00	0.00	5211.0
1243.30	0.00	0.00	5212.0	1243.30	0.00	0.00	5213.0	1243.30	0.00	0.00	5214.0
1243.20	0.00	0.00	5216.0	1243.10	0.00	0.00	5219.0	1243.10	0.00	0.00	5221.0
1243.00	0.00	0.00	5222.0	1243.00	0.00	0.00	5224.0	1243.10	0.00	0.00	5226.0
1243.70	0.00	0.00	5228.0	1243.90	0.00	0.00	5231.0	1243.50	0.00	0.00	5232.0
1243.90	0.00	0.00	5234.0	1243.90	0.00	0.00	5236.0	1243.90	0.00	0.00	5243.0
1244.00	0.00	0.00	5246.0	1243.60	0.00	0.00	5250.0	1243.10	0.00	0.00	5258.0
1243.60	0.00	0.00	5268.0	1243.60	0.00	0.00	5270.0	1243.40	0.00	0.00	5275.0
1243.70	0.00	0.00	5276.0	1243.80	0.00	0.00	5277.0	1243.70	0.00	0.00	5284.0
1243.70	0.00	0.00	5285.0	1244.10	0.00	0.00	5291.0	1244.10	0.00	0.00	5292.0
1244.10	0.00	0.00	5293.0	1244.00	0.00	0.00	5296.0	1243.70	0.00	0.00	5299.0
1243.70	0.00	0.00	5300.0	1243.70	0.00	0.00	5304.0	1243.80	0.00	0.00	5306.0
1244.00	0.00	0.00	5307.0	1243.90	0.00	0.00	5313.0	1243.80	0.00	0.00	5314.0
1243.80	0.00	0.00	5317.0	1244.00	0.00	0.00	5319.0	1244.10	0.00	0.00	5322.0
1243.80	0.00	0.00	5325.0	1243.90	0.00	0.00	5326.0	1244.10	0.00	0.00	5330.0
1243.90	0.00	0.00	5332.0	1243.80	0.00	0.00	5333.0	1243.90	0.00	0.00	5335.0
1244.10	0.00	0.00	5337.0	1244.00	0.00	0.00	5338.0	1244.00	0.00	0.00	5339.0
1243.90	0.00	0.00	5341.0	1243.90	0.00	0.00	5344.0	1243.80	0.00	0.00	5346.0
1243.70	0.00	0.00	5348.0	1244.10	0.00	0.00	5352.0	1244.10	0.00	0.00	5354.0
1244.20	0.00	0.00	5360.0	1244.20	0.00	0.00	5361.0	1244.30	0.00	0.00	5362.0
1244.40	0.00	0.00	5367.0	1244.40	0.00	0.00	5369.0	1244.30	0.00	0.00	5370.0
1244.30	0.00	0.00	5374.0	1244.30	0.00	0.00	5376.0	1244.30	0.00	0.00	5377.0
1244.30	0.00	0.00	5378.0	1244.40	0.00	0.00	5383.0	1244.60	0.00	0.00	5384.0
1244.70	0.00	0.00	5385.0	1244.50	0.00	0.00	5386.0	1244.60	0.00	0.00	5388.0
1245.20	0.00	0.00	5393.0	1245.60	0.00	0.00	5396.0	1246.30	0.00	0.00	5401.0
1246.40	0.00	0.00	5402.0	1247.60	0.00	0.00	5409.0	1247.70	0.00	0.00	5410.0
1248.50	0.00	0.00	5416.0	1249.30	0.00	0.00	5418.0	1250.30	0.00	0.00	5423.0
1250.70	0.00	0.00	5424.0	1250.70	0.00	0.00	5426.0	1252.00	0.00	0.00	5429.0
1252.20	0.00	0.00	5430.0	1253.80	0.00	0.00	5434.0	1254.10	0.00	0.00	5435.0
1254.30	0.00	0.00	5437.0								

ID
16 SECTION 2243.00 TIME = 150.12 HRS WS =1232.37 WIDTH = 100.5

Z	DZ	TDZ	Y	Z	DZ	TDZ	Y	Z	DZ	TDZ	Y
1239.90	0.00	0.00	4939.0	1239.90	0.00	0.00	4941.0	1236.90	0.00	-3.10	4944.0
1235.16	0.00	-4.83	4945.7	1233.29	0.00	-6.11	4947.6	1232.85	0.00	-6.45	4948.1
1231.66	0.00	-7.45	4949.7	1231.66	0.00	-5.05	4955.4	1231.65	0.00	-4.35	4963.8
1231.65	0.00	-3.66	4965.3	1231.65	0.00	-3.25	4965.8	1231.65	0.00	-1.75	4967.7
1231.63	0.00	-0.57	4972.2	1231.58	0.00	-0.52	4975.0	1231.54	0.00	-0.05	4977.1
1231.46	0.00	0.56	4982.0	1231.43	0.00	0.63	4984.0	1231.41	0.00	0.51	4985.0
1231.32	0.00	0.32	4990.0	1231.29	0.00	0.30	4992.0	1231.24	0.00	0.44	4995.0
1231.24	0.00	0.44	5004.0	1231.26	0.00	0.27	5005.0	1231.29	0.00	0.40	5007.0
1231.31	0.00	0.42	5008.0	1231.34	0.00	0.44	5010.0	1231.39	0.00	0.30	5013.0
1231.41	0.00	0.12	5013.9	1231.45	0.00	-0.35	5016.9	1231.48	0.00	-0.52	5018.6
1231.49	0.00	-1.21	5019.0	1231.51	0.00	-1.79	5020.0	1231.55	0.00	-2.44	5022.2
1231.60	0.00	-3.10	5025.3	1231.67	0.00	-3.42	5028.7	1231.74	0.00	-3.46	5029.8
1232.07	0.00	-3.14	5034.3	1232.17	0.00	-3.43	5036.3	1232.21	0.00	-3.59	5037.7
1232.24	0.00	-3.87	5039.0	1232.32	0.00	-4.09	5044.6	1232.38	0.00	-5.33	5050.7
1232.40	0.00	-6.91	5052.5	1232.42	0.00	-6.98	5054.6	1232.48	0.00	-7.33	5059.4
1232.48	0.00	-7.82	5060.4	1232.48	0.00	-7.52	5062.1	1232.48	0.00	-7.51	5062.7
1232.51	0.00	-7.39	5064.0	1234.31	0.00	-5.59	5066.5	1234.51	0.00	-5.39	5066.8
1236.14	0.00	-2.96	5069.0	1236.29	0.00	-2.71	5069.2	1236.87	0.00	-2.03	5070.0
1238.60	0.00	0.00	5073.0	1237.80	0.00	0.00	5078.0	1238.40	0.00	0.00	5086.0
1238.60	0.00	0.00	5091.0	1238.40	0.00	0.00	5094.0	1238.30	0.00	0.00	5098.0
1238.10	0.00	0.00	5102.0	1238.40	0.00	0.00	5105.0	1238.40	0.00	0.00	5106.0
1238.40	0.00	0.00	5110.0	1238.40	0.00	0.00	5112.0	1238.40	0.00	0.00	5113.0
1238.50	0.00	0.00	5119.0	1238.70	0.00	0.00	5124.0	1238.80	0.00	0.00	5125.0
1238.80	0.00	0.00	5126.0	1238.90	0.00	0.00	5131.0	1239.00	0.00	0.00	5132.0
1238.90	0.00	0.00	5133.0	1238.60	0.00	0.00	5135.0	1238.50	0.00	0.00	5137.0
1238.40	0.00	0.00	5140.0	1238.20	0.00	0.00	5143.0	1238.20	0.00	0.00	5145.0
1238.30	0.00	0.00	5148.0	1238.30	0.00	0.00	5151.0	1238.30	0.00	0.00	5152.0
1238.40	0.00	0.00	5153.0	1238.40	0.00	0.00	5156.0	1238.30	0.00	0.00	5159.0
1238.20	0.00	0.00	5163.0	1238.00	0.00	0.00	5168.0	1238.10	0.00	0.00	5171.0
1238.10	0.00	0.00	5175.0	1238.20	0.00	0.00	5180.0	1238.20	0.00	0.00	5182.0
1238.20	0.00	0.00	5186.0	1238.30	0.00	0.00	5189.0	1238.60	0.00	0.00	5191.0
1238.70	0.00	0.00	5194.0	1238.60	0.00	0.00	5196.0	1238.50	0.00	0.00	5198.0
1238.40	0.00	0.00	5199.0	1238.70	0.00	0.00	5202.0	1238.70	0.00	0.00	5203.0
1238.60	0.00	0.00	5205.0	1238.30	0.00	0.00	5207.0	1238.40	0.00	0.00	5210.0
1238.30	0.00	0.00	5211.0	1238.40	0.00	0.00	5215.0	1238.40	0.00	0.00	5216.0
1238.60	0.00	0.00	5219.0	1238.30	0.00	0.00	5223.0	1238.40	0.00	0.00	5226.0
1238.50	0.00	0.00	5230.0	1238.50	0.00	0.00	5231.0	1238.50	0.00	0.00	5232.0
1238.50	0.00	0.00	5238.0	1238.60	0.00	0.00	5241.0	1238.70	0.00	0.00	5245.0
1238.70	0.00	0.00	5246.0	1238.90	0.00	0.00	5248.0	1239.00	0.00	0.00	5253.0
1238.90	0.00	0.00	5254.0	1238.80	0.00	0.00	5257.0	1238.70	0.00	0.00	5259.0
1238.80	0.00	0.00	5260.0	1238.90	0.00	0.00	5261.0	1239.00	0.00	0.00	5265.0
1239.10	0.00	0.00	5267.0	1238.90	0.00	0.00	5269.0	1238.90	0.00	0.00	5270.0
1239.00	0.00	0.00	5274.0	1239.00	0.00	0.00	5275.0	1239.10	0.00	0.00	5279.0
1239.00	0.00	0.00	5282.0	1239.00	0.00	0.00	5283.0	1239.10	0.00	0.00	5288.0
1239.10	0.00	0.00	5291.0	1239.10	0.00	0.00	5293.0	1239.10	0.00	0.00	5294.0
1239.20	0.00	0.00	5295.0	1239.20	0.00	0.00	5299.0	1239.10	0.00	0.00	5301.0
1239.20	0.00	0.00	5306.0	1239.30	0.00	0.00	5308.0	1239.60	0.00	0.00	5314.0
1239.60	0.00	0.00	5316.0	1239.60	0.00	0.00	5321.0	1239.60	0.00	0.00	5322.0
1239.60	0.00	0.00	5324.0	1239.60	0.00	0.00	5327.0	1239.60	0.00	0.00	5329.0
1239.70	0.00	0.00	5330.0	1239.70	0.00	0.00	5331.0	1239.80	0.00	0.00	5335.0
1239.90	0.00	0.00	5338.0	1240.00	0.00	0.00	5339.0	1239.90	0.00	0.00	5343.0
1240.00	0.00	0.00	5345.0	1239.90	0.00	0.00	5346.0	1239.90	0.00	0.00	5349.0
1239.90	0.00	0.00	5350.0	1239.90	0.00	0.00	5351.0	1240.10	0.00	0.00	5357.0
1240.20	0.00	0.00	5358.0	1240.10	0.00	0.00	5362.0	1240.10	0.00	0.00	5364.0
1240.10	0.00	0.00	5366.0	1240.40	0.00	0.00	5370.0	1240.90	0.00	0.00	5372.0
1241.90	0.00	0.00	5375.0	1241.88	0.00	0.08	5377.0	1243.33	0.00	-0.07	5379.0
1245.20	0.00	0.00	5382.0	1246.20	0.00	0.00	5384.0	1247.15	0.00	0.05	5386.0
1247.87	0.00	-0.03	5387.0	1250.10	0.00	0.00	5391.0	1252.30	0.00	0.00	5395.0
1254.40	0.00	0.00	5398.0	1256.60	0.00	0.00	5402.0				

ID
15 SECTION 1941.00 TIME = 150.12 HRS WS =1228.28 WIDTH = 67.1

Z	DZ	TDZ	Y	Z	DZ	TDZ	Y	Z	DZ	TDZ	Y

1236.90	0.00	0.00	4891.0	1236.90	0.00	0.00	4894.0	1233.90	0.00	-3.10	4897.0
1231.96	0.00	-4.64	4898.9	1231.31	0.00	-4.39	4899.6	1230.49	0.00	-5.10	4900.4
1230.39	0.00	-2.21	4903.2	1230.38	0.00	-2.32	4912.2	1230.39	0.00	-2.01	4916.5
1230.38	0.00	-1.82	4917.6	1230.39	0.00	-1.51	4920.2	1230.39	0.00	-1.41	4922.3
1230.38	0.00	-1.22	4924.3	1230.49	0.00	-1.01	4926.9	1230.49	0.00	-1.21	4928.2
1230.49	0.00	-0.61	4929.4	1230.39	0.00	-0.42	4935.6	1230.39	0.00	-0.22	4938.5
1230.39	0.00	-0.12	4940.5	1230.39	0.00	-0.01	4942.0	1230.23	0.00	0.02	4944.2
1228.85	0.00	-1.55	4946.1	1228.49	0.00	-2.02	4946.6	1228.48	0.00	-1.92	4952.1
1228.41	0.00	-2.20	4957.4	1228.06	0.00	-2.54	4958.6	1227.98	0.00	-2.12	4960.1
1227.85	0.00	-2.46	4963.8	1227.83	0.00	-2.58	4964.7	1227.81	0.00	-2.49	4965.6
1227.72	0.00	-2.37	4969.5	1227.68	0.00	-1.92	4971.4	1227.63	0.00	-1.47	4973.3
1227.54	0.00	-0.26	4977.1	1227.49	0.00	-0.51	4981.1	1227.43	0.00	-0.77	4986.1
1227.39	0.00	-1.20	4989.0	1227.32	0.00	-1.38	4994.0	1227.31	-0.01	-1.09	4995.0
1227.31	-0.01	-0.49	4995.2	1227.31	-0.01	-0.49	5004.0	1227.36	0.00	-0.74	5007.7
1227.44	0.00	-2.25	5013.6	1227.51	0.00	-3.39	5018.9	1228.29	0.00	-2.51	5025.1
1228.29	0.00	-2.81	5028.7	1229.23	0.00	-2.18	5030.7	1229.24	0.00	-2.17	5033.5
1229.29	0.00	-2.11	5035.3	1229.30	0.00	-2.52	5037.3	1229.33	0.00	-2.68	5040.2
1229.35	0.00	-2.67	5042.5	1229.35	0.00	-2.46	5043.2	1229.38	0.00	-2.13	5046.7
1229.42	0.00	-2.09	5050.7	1229.47	0.00	-2.35	5057.0	1229.48	0.00	-2.93	5059.3
1229.50	0.00	-3.50	5062.3	1229.51	0.00	-4.80	5064.3	1229.50	0.00	-4.70	5066.8
1229.51	0.00	-4.40	5068.5	1229.61	0.00	-4.39	5069.2	1229.62	0.00	-4.49	5076.4
1230.12	0.00	-3.98	5078.2	1230.63	0.00	-5.47	5078.9	1231.09	0.00	-5.01	5079.6
1232.87	0.00	-3.93	5082.0	1234.32	0.00	-3.18	5084.0	1236.50	0.00	-1.40	5087.0
1237.23	0.00	-0.87	5088.0	1237.96	0.00	-0.24	5089.0	1239.10	0.00	0.00	5097.0
1239.00	0.00	0.00	5098.0	1238.90	0.00	0.00	5101.0	1238.90	0.00	0.00	5105.0
1238.50	0.00	0.00	5112.0	1238.40	0.00	0.00	5113.0	1238.30	0.00	0.00	5114.0
1236.80	0.00	0.00	5121.0	1236.20	0.00	0.00	5124.0	1234.70	0.00	0.00	5129.0
1235.00	0.00	0.00	5130.0	1235.30	0.00	0.00	5132.0	1234.80	0.00	0.00	5134.0
1234.20	0.00	0.00	5137.0	1234.10	0.00	0.00	5140.0	1233.80	0.00	0.00	5144.0
1233.80	0.00	0.00	5145.0	1233.90	0.00	0.00	5147.0	1233.80	0.00	0.00	5150.0
1233.80	0.00	0.00	5151.0	1233.80	0.00	0.00	5154.0	1233.70	0.00	0.00	5156.0
1233.60	0.00	0.00	5158.0	1233.50	0.00	0.00	5160.0	1233.60	0.00	0.00	5164.0
1233.50	0.00	0.00	5167.0	1233.60	0.00	0.00	5170.0	1233.60	0.00	0.00	5172.0
1233.70	0.00	0.00	5173.0	1233.80	0.00	0.00	5176.0	1233.80	0.00	0.00	5177.0
1233.70	0.00	0.00	5181.0	1233.80	0.00	0.00	5183.0	1233.70	0.00	0.00	5187.0
1233.70	0.00	0.00	5189.0	1233.80	0.00	0.00	5190.0	1233.70	0.00	0.00	5191.0
1233.80	0.00	0.00	5198.0	1233.90	0.00	0.00	5203.0	1233.90	0.00	0.00	5205.0
1233.90	0.00	0.00	5208.0	1234.00	0.00	0.00	5209.0	1233.90	0.00	0.00	5212.0
1234.00	0.00	0.00	5215.0	1234.00	0.00	0.00	5216.0	1234.00	0.00	0.00	5217.0
1233.80	0.00	0.00	5223.0	1233.90	0.00	0.00	5224.0	1234.00	0.00	0.00	5229.0
1233.90	0.00	0.00	5230.0	1233.90	0.00	0.00	5232.0	1233.80	0.00	0.00	5234.0
1233.90	0.00	0.00	5235.0	1233.90	0.00	0.00	5237.0	1233.80	0.00	0.00	5239.0
1233.90	0.00	0.00	5242.0	1233.90	0.00	0.00	5243.0	1233.90	0.00	0.00	5244.0
1233.90	0.00	0.00	5246.0	1234.10	0.00	0.00	5251.0	1234.00	0.00	0.00	5255.0
1234.00	0.00	0.00	5258.0	1234.10	0.00	0.00	5259.0	1234.10	0.00	0.00	5264.0
1234.10	0.00	0.00	5265.0	1234.20	0.00	0.00	5267.0	1234.20	0.00	0.00	5268.0
1234.10	0.00	0.00	5273.0	1234.20	0.00	0.00	5276.0	1234.30	0.00	0.00	5277.0
1234.30	0.00	0.00	5280.0	1234.60	0.00	0.00	5287.0	1234.50	0.00	0.00	5289.0
1234.60	0.00	0.00	5292.0	1234.60	0.00	0.00	5295.0	1234.70	0.00	0.00	5296.0
1234.80	0.00	0.00	5299.0	1234.50	0.00	0.00	5302.0	1234.50	0.00	0.00	5304.0
1234.50	0.00	0.00	5309.0	1234.60	0.00	0.00	5313.0	1234.70	0.00	0.00	5314.0
1234.70	0.00	0.00	5316.0	1234.70	0.00	0.00	5317.0	1234.80	0.00	0.00	5320.0
1234.90	0.00	0.00	5323.0	1235.00	0.00	0.00	5325.0	1235.30	0.00	0.00	5329.0
1235.70	0.00	0.00	5331.0	1235.60	0.00	0.00	5332.0	1235.60	0.00	0.00	5334.0
1235.70	0.00	0.00	5335.0	1235.80	0.00	0.00	5336.0	1236.30	0.00	0.00	5341.0
1236.30	0.00	0.00	5342.0	1236.00	0.00	0.00	5343.0	1236.10	0.00	0.00	5344.0
1236.00	0.00	0.00	5347.0	1236.00	0.00	0.00	5349.0	1236.10	0.00	0.00	5350.0
1236.20	0.00	0.00	5354.0	1236.30	0.00	0.00	5357.0	1236.60	0.00	0.00	5362.0
1236.70	0.00	0.00	5364.0	1236.90	0.00	0.00	5367.0	1237.00	0.00	0.00	5368.0
1237.10	0.00	0.00	5369.0	1237.10	0.00	0.00	5370.0	1237.20	0.00	0.00	5372.0
1237.90	0.00	0.00	5374.0	1238.30	0.00	0.00	5377.0	1238.60	0.00	0.00	5379.0
1238.90	0.00	0.00	5381.0	1239.00	0.00	0.00	5384.0	1239.30	0.00	0.00	5385.0
1240.40	0.00	0.00	5390.0	1241.24	0.00	0.04	5396.0	1243.42	0.00	-0.08	5399.0
1244.30	0.00	0.00	5401.0	1245.00	0.00	0.00	5404.0	1246.80	0.00	0.00	5408.0
1247.90	0.00	0.00	5411.0	1248.00	0.00	0.00	5411.2	1250.80	0.00	0.10	5417.0
1251.53	0.00	-0.17	5418.0	1253.50	0.00	0.00	5421.0	1254.30	0.00	0.00	5423.0
1256.00	0.00	0.00	5426.0								

ID
14 SECTION 1813.00 TIME = 150.12 HRS WS =1227.27 WIDTH = 89.7

Z	DZ	TDZ	Y	Z	DZ	TDZ	Y	Z	DZ	TDZ	Y
1239.00	0.00	0.00	471.0	1238.64	0.00	0.00	471.5	1238.00	0.00	0.00	473.7
1237.00	0.00	0.00	477.0	1236.00	0.00	0.00	480.0	1235.00	0.00	0.00	483.0
1234.00	0.00	0.00	486.0	1233.00	0.00	0.00	489.0	1232.00	0.00	0.00	492.0
1230.70	0.00	-0.30	495.7	1227.87	0.00	-2.93	495.9	1227.87	0.00	-2.13	502.5
1227.86	0.00	-1.14	516.8	1227.87	0.00	-0.13	531.2	1227.87	0.00	0.87	535.0
1227.87	0.00	1.86	538.3	1227.87	0.00	2.16	549.8	1227.86	0.00	1.86	554.8
1227.87	0.00	0.86	566.9	1226.48	0.00	-1.53	578.4	1226.47	0.00	-1.92	584.1
1226.48	0.01	-1.52	593.3	1226.47	0.00	-0.54	613.9	1226.47	0.01	0.48	625.9
1225.34	0.01	-0.04	658.2	1229.00	0.00	3.30	664.4	1229.00	0.00	2.99	669.0
1229.00	0.00	2.17	692.1	1229.00	0.00	2.09	704.4	1229.00	0.00	1.99	709.1
1228.99	0.00	0.99	712.0	1229.00	0.00	0.00	715.7	1230.02	0.00	0.02	716.5
1230.47	0.00	0.01	718.1	1231.00	0.00	0.00	719.5	1232.00	0.00	0.00	725.2
1233.00	0.00	0.00	731.3	1234.00	0.00	0.00	739.1	1235.00	0.00	0.00	751.7
1235.00	0.00	0.00	762.0								

ID
13 SECTION 1760.00 TIME = 150.12 HRS WS =1226.98 WIDTH = 114.2

Z	DZ	TDZ	Y	Z	DZ	TDZ	Y	Z	DZ	TDZ	Y
1238.00	0.00	0.00	383.0	1237.94	0.00	0.00	383.2	1237.63	0.00	0.00	399.9
1237.63	0.00	0.00	401.9	1237.92	0.00	0.00	420.1	1238.20	0.00	0.00	438.4
1237.00	0.00	0.00	444.2	1236.00	0.00	0.00	447.2	1235.00	0.00	0.00	450.2
1234.00	0.00	0.00	453.2	1233.00	0.00	0.00	456.2	1232.00	0.00	0.00	459.2
1231.00	0.00	0.00	462.2	1229.96	0.00	-0.04	465.3	1227.84	0.00	-1.66	469.1
1227.88	0.00	-1.12	493.9	1227.89	0.00	-0.11	499.7	1227.89	0.00	0.89	501.5
1227.88	0.00	1.88	504.8	1227.88	0.00	2.88	506.3	1227.88	0.00	3.18	512.0
1227.88	0.00	2.87	515.6	1227.88	0.00	2.78	517.4	1227.88	0.00	2.88	519.6
1227.89	0.00	3.11	523.6	1227.88	0.00	2.88	528.0	1227.88	0.00	1.88	531.0
1227.88	0.00	1.38	532.4	1227.88	0.00	1.68	534.6	1227.88	0.00	0.88	536.7
1227.89	0.00	0.22	557.3	1227.89	0.00	0.56	558.7	1227.88	0.00	0.88	579.2
1227.89	0.00	0.89	581.0	1227.89	0.00	0.89	589.1	1227.88	0.00	0.36	590.3
1227.88	0.00	0.85	603.3	1226.66	0.00	-0.74	605.7	1226.65	0.00	-0.85	622.9
1226.65	0.00	-0.35	628.6	1226.65	0.00	0.65	640.9	1226.37	0.00	1.37	664.4
1224.59	0.01	0.58	673.6	1224.59	0.01	0.78	676.7	1224.59	0.00	0.79	681.2
1226.66	0.00	2.66	697.2	1226.66	0.00	1.65	707.7	1226.66	0.00	1.06	710.9
1226.66	0.00	1.66	718.8	1227.81	0.00	1.81	720.4	1228.00	0.00	1.00	721.0
1228.00	0.00	0.00	721.8	1229.00	0.00	0.00	723.8	1230.00	0.00	0.00	724.9
1231.00	0.00	0.00	728.1	1232.00	0.00	0.00	731.4	1233.00	0.00	0.00	734.6
1234.00	0.00	0.00	738.0	1235.00	0.00	0.00	743.6	1235.89	0.00	0.00	750.5
1235.56	0.00	0.00	768.7	1235.22	0.00	0.00	787.0	1234.89	0.00	0.00	805.2
1234.56	0.00	0.00	823.4								

ID
12 SECTION 1680.00 TIME = 150.12 HRS WS =1225.84 WIDTH = 49.1

Z	DZ	TDZ	Y	Z	DZ	TDZ	Y	Z	DZ	TDZ	Y
1235.10	0.00	0.00	1213.3	1235.04	0.00	0.00	1213.5	1234.81	0.00	0.00	1229.7
1234.82	0.00	0.00	1231.7	1234.00	0.00	0.00	1237.2	1233.00	0.00	0.00	1240.3
1232.00	0.00	0.00	1243.5	1231.00	0.00	0.00	1246.6	1230.00	0.00	0.00	1249.8
1229.00	0.00	0.00	1252.9	1228.01	0.00	0.01	1255.2	1227.06	0.00	0.00	1258.9
1226.25	0.00	-0.75	1259.3	1226.13	0.00	0.13	1259.5	1224.88	-0.01	-0.11	1268.8
1224.76	-0.01	0.76	1269.9	1224.41	-0.01	1.17	1282.0	1224.77	-0.01	0.77	1294.5
1225.18	-0.01	0.18	1301.1	1225.42	-0.01	-0.18	1306.4	1225.87	0.00	0.87	1311.1
1226.02	0.00	1.30	1322.5	1226.02	0.00	1.02	1325.1	1226.02	0.00	0.02	1330.7
1226.02	0.00	-0.81	1334.4	1226.02	0.00	-0.58	1350.3	1226.02	0.00	0.01	1370.6
1226.02	0.00	0.46	1382.9	1226.02	0.00	0.00	1392.7	1226.02	0.00	-1.00	1394.5
1226.02	0.00	-1.10	1394.9	1226.02	0.00	-1.00	1395.1	1226.02	0.00	-0.66	1400.2
1226.02	0.00	-0.99	1408.4	1226.65	0.00	-0.47	1409.2	1226.74	0.00	-0.28	1412.9
1226.78	0.00	0.76	1418.7	1228.42	0.00	2.77	1424.3	1228.42	0.00	2.42	1430.5
1228.42	0.00	1.64	1448.1	1228.42	0.00	2.42	1455.0	1228.42	0.00	3.41	1472.2
1228.42	0.00	4.42	1490.1	1228.42	0.00	5.11	1495.8	1228.42	0.00	5.11	1502.8
1228.42	0.00	4.41	1504.7	1228.42	0.00	3.41	1507.7	1228.42	0.00	2.41	1509.0
1228.43	0.00	1.42	1513.2	1228.77	0.00	0.76	1516.3	1229.00	0.00	0.00	1519.0
1230.00	0.00	0.00	1522.2	1230.00	0.00	0.00	1523.2	1230.00	0.00	0.00	1539.2
1230.00	0.00	0.00	1555.1	1231.00	0.00	0.00	1561.5	1232.00	0.00	0.00	1568.0
1233.00	0.00	0.00	1574.8	1234.00	0.00	0.00	1582.4	1235.00	0.00	0.00	1590.9
1235.09	0.00	0.00	1593.3	1234.67	0.00	0.00	1610.1	1234.25	0.00	0.00	1626.8

1233.84	0.00	0.00	1643.5	1233.42	0.00	0.00	1660.3	1233.00	0.00	0.00	1677.0
1232.00	0.00	0.00	1682.4	1231.00	0.00	0.00	1687.5	1230.00	0.00	0.00	1692.6
1230.00	0.00	0.00	1701.3	1230.40	0.00	0.00	1711.0	1230.30	0.00	0.00	1712.5
1230.28	0.00	0.00	1727.6	1230.26	0.00	0.00	1742.6				

ID
11 SECTION 1413.00 TIME = 150.12 HRS WS =1222.85 WIDTH = 141.8

Z	DZ	TDZ	Y	Z	DZ	TDZ	Y	Z	DZ	TDZ	Y
1231.80	0.00	0.00	957.0	1231.50	0.00	0.00	973.2	1231.46	0.00	0.00	975.2
1231.00	0.00	0.00	976.9	1230.00	0.00	0.00	980.0	1229.00	0.00	0.00	983.1
1228.00	0.00	0.00	986.2	1227.00	0.00	0.00	989.3	1226.00	0.00	0.00	992.3
1225.00	0.00	0.00	994.4	1223.57	0.00	-1.03	995.9	1223.57	0.00	-1.43	996.4
1221.46	0.01	-3.71	1000.6	1221.46	0.01	-3.54	1002.0	1221.46	0.01	-2.54	1006.9
1221.46	0.01	-1.54	1012.2	1221.46	0.01	-0.54	1018.5	1221.46	0.01	0.46	1022.9
1222.21	0.01	1.40	1032.2	1222.67	0.00	1.77	1043.4	1222.67	0.00	1.67	1064.6
1222.67	0.00	0.67	1068.7	1222.67	0.00	0.48	1076.2	1222.67	0.00	0.26	1097.3
1221.22	0.01	-0.78	1118.9	1225.09	0.00	3.20	1133.8	1225.09	0.00	3.30	1151.5
1222.32	0.00	0.89	1156.7	1222.67	0.00	1.62	1169.6	1224.46	0.00	3.46	1174.0
1224.47	0.00	3.46	1179.5	1224.47	0.00	2.46	1182.6	1224.46	0.00	1.45	1193.4
1224.46	0.00	0.44	1205.0	1224.47	0.00	-0.54	1208.3	1224.47	0.00	-0.74	1213.3
1225.09	0.00	0.09	1214.6	1225.09	0.00	0.44	1224.6	1225.09	0.00	0.79	1241.0
1225.09	0.00	1.09	1243.2	1225.09	0.00	1.19	1259.0	1225.09	0.00	1.39	1269.5
1225.09	0.00	1.59	1281.3	1225.09	0.00	2.09	1288.9	1225.09	0.00	2.99	1293.3
1225.09	0.00	2.09	1299.6	1225.09	0.00	1.09	1301.4	1225.09	0.00	0.09	1304.6
1226.00	0.00	0.00	1306.6	1226.30	0.00	0.00	1308.2	1226.32	0.00	0.00	1325.8
1226.33	0.00	0.00	1343.5	1226.35	0.00	0.00	1361.2	1226.37	0.00	0.00	1378.9
1226.38	0.00	0.00	1396.6	1226.40	0.00	0.00	1414.3	1226.55	0.00	0.00	1433.0
1226.70	0.00	0.00	1451.6	1226.85	0.00	0.00	1470.3	1227.00	0.00	0.00	1489.0

ID
10 SECTION 1165.00 TIME = 150.12 HRS WS =1220.13 WIDTH = 80.6

Z	DZ	TDZ	Y	Z	DZ	TDZ	Y	Z	DZ	TDZ	Y
1229.40	0.00	0.00	819.9	1229.05	0.00	0.00	835.9	1229.00	0.00	0.00	837.9
1229.00	0.00	0.00	838.1	1228.00	0.00	0.00	841.1	1227.00	0.00	0.00	844.1
1226.00	0.00	0.00	847.1	1225.00	0.00	0.00	850.1	1225.00	0.00	0.00	852.5
1225.00	0.00	0.00	855.2	1225.10	0.00	0.00	855.8	1225.00	0.00	0.00	856.4
1224.00	0.00	0.00	856.8	1223.00	0.00	0.00	857.0	1222.93	0.00	0.93	857.6
1222.68	0.00	1.68	858.0	1222.67	0.00	2.66	858.3	1222.67	0.00	3.56	869.1
1222.67	0.00	3.32	883.9	1222.65	0.00	3.04	899.8	1222.67	0.00	3.67	918.3
1222.67	0.00	4.16	925.4	1222.65	0.00	3.66	940.3	1222.65	0.00	3.85	950.9
1222.64	0.00	4.04	961.5	1222.64	0.00	3.64	971.0	1222.64	0.00	3.54	972.8
1222.64	0.00	3.64	975.1	1221.88	0.00	2.98	976.4	1221.67	0.00	2.66	978.5
1220.13	0.00	0.93	982.5	1219.40	0.00	0.40	989.1	1219.20	0.00	0.30	991.5
1219.07	0.00	0.16	995.4	1218.82	0.00	-0.18	1002.1	1218.77	0.00	-0.43	1003.6
1218.75	0.00	-0.26	1006.9	1218.74	0.00	0.63	1009.9	1219.54	0.00	0.99	1031.8
1220.06	0.00	1.06	1055.4	1220.13	0.00	0.64	1064.1	1220.51	0.00	0.51	1075.0
1220.55	0.00	0.05	1084.3	1220.78	0.00	0.67	1096.7	1222.00	0.00	1.00	1099.8
1222.01	0.00	0.01	1100.6	1222.13	0.00	0.13	1101.3	1222.13	0.00	0.63	1112.2
1222.13	0.00	1.13	1120.3	1222.13	0.00	2.13	1125.1	1222.13	0.00	2.63	1131.7
1222.13	0.00	2.13	1136.0	1222.13	0.00	1.13	1140.5	1222.13	0.00	0.90	1144.1
1222.12	0.00	1.12	1159.9	1222.12	0.00	1.32	1166.6	1222.14	0.00	1.14	1172.2
1222.21	0.00	0.21	1175.2	1223.00	0.00	0.00	1177.0	1223.54	0.00	0.00	1178.5
1223.53	0.00	0.00	1197.0	1223.52	0.00	0.00	1215.5	1223.51	0.00	0.00	1234.0
1223.55	0.00	0.00	1252.5								

ID
9 SECTION 930.00 TIME = 150.12 HRS WS =1217.25 WIDTH = 95.9

Z	DZ	TDZ	Y	Z	DZ	TDZ	Y	Z	DZ	TDZ	Y
1227.20	0.00	0.00	628.2	1226.95	0.00	0.00	644.4	1227.00	0.00	0.00	646.4
1226.00	0.00	0.00	649.4	1225.00	0.00	0.00	652.4	1224.00	0.00	0.00	655.5
1223.00	0.00	0.00	658.5	1220.88	0.00	-1.12	661.6	1219.51	0.00	-1.95	663.5
1218.81	0.00	-2.19	664.5	1218.80	0.00	-1.20	671.4	1218.80	0.00	-0.20	671.9
1218.80	0.00	0.79	673.9	1218.80	0.00	1.79	687.7	1218.80	0.00	2.79	690.2
1218.80	0.00	3.50	697.5	1218.80	0.00	3.16	716.7	1218.80	0.00	2.81	735.8
1218.80	0.00	2.96	738.2	1218.76	0.00	3.05	755.8	1218.80	0.00	2.91	757.0

1218.75	0.00	2.75	779.8	1218.80	0.00	2.30	781.5	1218.80	0.00	2.81	789.9
1215.81	0.00	0.31	810.2	1215.81	0.00	0.81	825.8	1216.58	0.00	1.59	840.9
1216.80	0.00	0.81	853.9	1216.82	0.00	-0.18	856.8	1216.82	0.00	-0.18	857.0
1216.82	0.00	-0.18	858.6	1216.82	0.00	0.01	870.3	1216.82	0.00	0.22	894.6
1218.51	0.00	2.11	901.2	1218.52	0.00	1.82	911.6	1218.52	0.00	1.52	927.6
1218.51	0.00	0.51	934.3	1218.51	0.00	-0.49	938.0	1218.51	0.00	-1.49	947.5
1218.51	0.00	-2.49	953.3	1218.52	0.00	-2.68	958.1	1220.14	0.00	-0.87	960.4
1220.96	0.00	-0.03	961.5	1221.00	0.00	0.00	961.7	1221.64	0.00	0.00	964.2
1221.64	0.00	0.00	981.9	1221.64	0.00	0.00	999.7	1221.65	0.00	0.00	1017.4
1221.65	0.00	0.00	1035.2	1221.65	0.00	0.00	1052.9				

ID
8 SECTION 818.00 TIME = 150.12 HRS WS =1215.65 WIDTH = 97.2

Z	DZ	TDZ	Y	Z	DZ	TDZ	Y	Z	DZ	TDZ	Y
1225.10	0.00	0.00	0.0	1225.00	0.00	0.00	1.0	1224.00	0.00	0.00	4.1
1223.00	0.00	0.00	7.2	1222.00	0.00	0.00	10.4	1220.89	0.00	-0.11	13.5
1220.66	0.00	-0.26	13.8	1217.01	0.00	-2.99	18.8	1217.00	0.00	-2.00	23.7
1217.00	0.00	-1.01	24.9	1217.00	0.00	-0.01	28.5	1216.99	0.00	0.08	33.8
1217.00	0.00	-0.01	35.8	1217.00	0.00	-0.20	37.3	1217.00	0.00	-0.01	38.6
1217.00	0.00	0.10	40.9	1216.99	0.00	-0.01	45.8	1217.00	0.00	-0.41	50.7
1216.99	0.00	-0.01	55.0	1216.99	0.00	0.36	59.5	1217.00	0.00	-0.01	62.0
1217.00	0.00	0.00	70.6	1216.99	0.00	0.99	71.7	1217.00	0.00	2.00	75.0
1216.99	0.00	2.85	94.3	1217.00	0.00	2.71	110.7	1217.00	0.00	2.55	119.4
1215.01	0.00	0.41	125.4	1214.98	0.00	-0.03	152.1	1214.97	0.00	-0.43	160.9
1214.97	0.00	-0.04	167.1	1214.97	0.00	0.96	167.5	1215.11	0.00	1.62	184.6
1215.12	0.00	1.13	198.5	1215.15	0.00	0.65	219.9	1216.99	0.00	1.98	222.9
1216.99	0.00	0.99	230.8	1216.99	0.00	0.96	233.3	1216.99	0.00	0.99	237.5
1216.99	0.00	1.44	251.8	1216.99	0.00	1.90	265.8	1216.99	0.00	1.87	273.3
1216.99	0.00	0.98	287.4	1216.99	0.00	0.48	300.5	1216.99	0.00	-0.01	314.1
1217.00	0.00	-0.99	328.8	1217.47	0.00	-1.53	329.5	1218.39	0.00	-0.79	332.7
1218.50	0.00	-1.50	334.3	1220.32	0.00	-0.68	336.8	1221.20	0.00	0.00	338.3
1221.18	0.00	0.00	357.7	1221.17	0.00	0.00	377.2	1221.15	0.00	0.00	396.6
1221.14	0.00	0.00	416.1	1221.12	0.00	0.00	435.5				

ID
7 SECTION 611.00 TIME = 150.12 HRS WS =1212.95 WIDTH = 155.5

Z	DZ	TDZ	Y	Z	DZ	TDZ	Y	Z	DZ	TDZ	Y
1224.70	0.00	0.00	267.9	1224.49	0.00	0.00	285.2	1224.48	0.00	0.00	287.4
1224.00	0.00	0.00	288.8	1223.00	0.00	0.00	292.0	1222.00	0.00	0.00	295.2
1221.00	0.00	0.00	298.5	1220.00	0.00	0.00	301.7	1218.79	0.00	-0.21	304.9
1218.37	0.00	0.09	305.5	1216.77	0.00	-1.53	313.7	1216.29	0.00	-1.71	314.3
1215.93	0.00	-1.07	314.8	1215.57	0.00	-0.43	315.6	1215.57	0.00	0.56	320.1
1215.57	0.00	0.86	325.5	1215.57	0.00	0.57	336.5	1215.57	0.00	0.27	341.2
1215.57	0.00	0.16	354.9	1215.57	0.00	0.05	368.4	1215.39	0.00	0.38	372.5
1215.57	0.00	1.57	394.2	1213.88	0.00	0.37	399.0	1212.84	0.00	-0.17	411.9
1215.57	0.00	3.07	425.0	1211.47	0.00	-0.53	430.9	1212.90	0.00	0.69	445.4
1212.88	0.00	0.88	453.1	1212.88	0.00	1.32	457.7	1212.87	0.00	0.87	460.2
1212.85	0.00	0.83	467.6	1212.84	0.00	1.34	469.4	1212.83	0.00	0.83	475.1
1212.82	0.00	0.77	485.2	1212.82	0.00	0.82	487.1	1212.82	0.00	1.31	493.3
1212.75	0.00	1.75	511.6	1212.73	0.00	1.93	513.5	1211.40	0.00	0.40	525.0
1212.24	0.00	0.23	541.3	1212.31	0.00	-0.69	544.3	1212.68	0.00	-1.31	557.2
1212.79	0.00	-1.70	562.6	1212.81	0.00	-2.18	582.0	1215.47	0.00	0.17	585.9
1215.62	0.00	0.62	593.8	1215.38	0.00	0.88	611.3	1215.63	0.00	1.63	626.9
1215.62	0.00	1.82	635.3	1215.62	0.00	1.62	644.6	1215.61	0.00	0.61	646.8
1215.63	0.00	0.48	651.3	1215.63	0.00	-0.38	654.5	1215.63	0.00	-1.37	659.2
1216.02	0.00	-1.98	660.5	1217.47	0.00	-1.53	662.5	1220.00	0.00	0.00	666.2
1220.10	0.00	0.00	666.7	1220.00	0.00	0.00	685.5	1220.00	0.00	0.00	693.9
1219.90	0.00	0.00	707.4	1219.88	0.00	0.00	725.3	1219.85	0.00	0.00	743.2
1219.82	0.00	0.00	761.2	1219.80	0.00	0.00	779.1	1219.83	0.00	0.00	798.7
1219.87	0.00	0.00	818.3	1219.90	0.00	0.00	837.9	1219.93	0.00	0.00	857.5
1219.97	0.00	0.00	877.2	1220.00	0.00	0.00	896.8				

ID
6 SECTION 424.00 TIME = 150.12 HRS WS =1210.97 WIDTH = 99.2

Z	DZ	TDZ	Y	Z	DZ	TDZ	Y	Z	DZ	TDZ	Y

1224.00	0.00	0.00	163.6	1224.00	0.00	0.00	163.8	1224.00	0.00	0.00	166.8
1224.00	0.00	0.00	167.0	1224.00	0.00	0.00	183.1	1224.00	0.00	0.00	183.3
1224.00	0.00	0.00	198.0	1224.00	0.00	0.00	198.2	1224.00	0.00	0.00	207.4
1224.00	0.00	0.00	207.6	1224.00	0.00	0.00	208.7	1224.00	0.00	0.00	208.9
1221.00	0.00	0.00	209.6	1220.50	0.00	0.00	222.8	1220.00	0.00	0.00	236.0
1219.00	0.00	0.00	245.1	1218.10	0.00	0.00	251.6	1218.00	0.00	0.00	253.5
1218.00	0.00	0.00	271.0	1218.00	0.00	0.00	288.4	1218.00	0.00	0.00	290.5
1217.67	0.00	0.00	308.0	1217.33	0.00	0.00	325.6	1217.00	0.00	0.00	343.2
1217.00	0.00	0.00	361.2	1217.00	0.00	0.00	366.5	1216.00	0.00	0.00	383.7
1215.00	0.00	0.00	386.9	1214.09	0.00	0.00	396.1	1214.19	0.00	-0.01	399.7
1214.05	0.00	0.05	405.7	1214.08	0.00	1.09	418.2	1213.21	0.00	1.21	429.2
1213.13	0.00	2.13	434.4	1213.09	0.00	2.59	447.3	1213.04	0.00	3.03	447.7
1212.34	0.00	2.45	459.2	1210.98	-0.01	0.98	461.0	1210.51	0.00	-0.14	461.7
1210.75	0.00	0.74	484.4	1210.63	0.00	0.63	501.1	1210.44	0.01	0.44	513.5
1209.52	0.01	-0.47	523.6	1209.45	0.01	0.46	525.1	1209.38	0.01	0.58	526.7
1209.10	0.01	0.29	541.4	1209.22	0.01	0.40	555.8	1210.22	0.00	1.21	557.2
1211.01	0.00	1.00	560.4	1211.01	0.00	0.00	560.8	1212.00	0.00	0.00	561.0
1213.00	0.00	0.00	561.5	1214.00	0.00	0.00	567.2	1215.00	0.00	0.00	569.9
1216.00	0.00	0.00	572.8	1216.60	0.00	0.00	580.0	1216.53	0.00	0.00	586.0
1224.00	0.00	0.00	601.0								

ID
5 SECTION 398.00 TIME = 150.12 HRS WS =1210.78 WIDTH = 78.5

Z	DZ	TDZ	Y	Z	DZ	TDZ	Y	Z	DZ	TDZ	Y
1220.20	0.00	0.00	4623.0	1220.40	0.00	0.00	4625.0	1220.20	0.00	0.00	4626.0
1220.30	0.00	0.00	4627.0	1220.00	0.00	0.00	4632.0	1219.90	0.00	0.00	4634.0
1218.80	0.00	0.00	4638.0	1218.80	0.00	0.00	4644.0	1218.60	0.00	0.00	4645.0
1218.70	0.00	0.00	4648.0	1218.10	0.00	0.00	4649.0	1217.80	0.00	0.00	4651.0
1218.20	0.00	0.00	4663.0	1218.10	0.00	0.00	4666.0	1217.70	0.00	0.00	4667.0
1217.90	0.00	0.00	4669.0	1218.00	0.00	0.00	4674.0	1217.90	0.00	0.00	4676.0
1217.50	0.00	0.00	4680.0	1217.30	0.00	0.00	4681.0	1217.50	0.00	0.00	4683.0
1217.50	0.00	0.00	4687.0	1217.80	0.00	0.00	4690.0	1217.90	0.00	0.00	4694.0
1217.70	0.00	0.00	4695.0	1217.80	0.00	0.00	4697.0	1217.90	0.00	0.00	4700.0
1218.20	0.00	0.00	4702.0	1218.30	0.00	0.00	4703.0	1218.20	0.00	0.00	4705.0
1217.90	0.00	0.00	4709.0	1218.20	0.00	0.00	4712.0	1218.20	0.00	0.00	4715.0
1218.40	0.00	0.00	4718.0	1218.00	0.00	0.00	4721.0	1218.10	0.00	0.00	4728.0
1218.50	0.00	0.00	4732.0	1218.50	0.00	0.00	4733.0	1217.90	0.00	0.00	4736.0
1217.90	0.00	0.00	4738.0	1217.80	0.00	0.00	4739.0	1218.00	0.00	0.00	4741.0
1218.20	0.00	0.00	4743.0	1218.30	0.00	0.00	4750.0	1218.00	0.00	0.00	4752.0
1218.30	0.00	0.00	4755.0	1218.10	0.00	0.00	4758.0	1217.80	0.00	0.00	4759.0
1218.30	0.00	0.00	4763.0	1218.60	0.00	0.00	4764.0	1218.70	0.00	0.00	4766.0
1218.20	0.00	0.00	4767.0	1218.00	0.00	0.00	4769.0	1218.10	0.00	0.00	4770.0
1218.00	0.00	0.00	4777.0	1218.40	0.00	0.00	4780.0	1218.10	0.00	0.00	4781.0
1217.80	0.00	0.00	4784.0	1218.00	0.00	0.00	4786.0	1218.10	0.00	0.00	4788.0
1217.90	0.00	0.00	4792.0	1218.10	0.00	0.00	4794.0	1218.10	0.00	0.00	4795.0
1218.20	0.00	0.00	4800.0	1217.90	0.00	0.00	4807.0	1218.00	0.00	0.00	4812.0
1217.60	0.00	0.00	4819.0	1217.90	0.00	0.00	4824.0	1217.90	0.00	0.00	4825.0
1217.80	0.00	0.00	4827.0	1217.80	0.00	0.00	4831.0	1217.90	0.00	0.00	4832.0
1217.80	0.00	0.00	4835.0	1217.60	0.00	0.00	4838.0	1218.00	0.00	0.00	4842.0
1218.00	0.00	0.00	4843.0	1217.90	0.00	0.00	4844.0	1218.00	0.00	0.00	4857.0
1218.00	0.00	0.00	4858.0	1218.00	0.00	0.00	4858.2	1217.40	0.00	0.00	4868.0
1217.60	0.00	0.00	4870.0	1217.20	0.00	0.00	4873.0	1217.20	0.00	0.00	4874.0
1217.50	0.00	0.00	4878.0	1217.30	0.00	0.00	4879.0	1217.10	0.00	0.00	4881.0
1217.30	0.00	0.00	4882.0	1217.80	0.00	0.00	4886.0	1217.60	0.00	0.00	4889.0
1217.80	0.00	0.00	4892.0	1217.90	0.00	0.00	4896.0	1217.50	0.00	0.00	4900.0
1218.20	0.00	0.00	4902.0	1217.90	0.00	0.00	4905.0	1217.70	0.00	0.00	4909.0
1218.20	0.00	0.00	4917.0	1218.20	0.00	0.00	4921.0	1217.80	0.00	0.00	4927.0
1217.80	0.00	0.00	4932.0	1217.80	0.00	0.00	4933.0	1217.80	0.00	0.00	4934.0
1215.40	0.00	0.00	4940.0	1210.76	0.00	-0.84	4945.0	1210.63	0.00	-0.17	4945.3
1210.62	0.00	-0.68	4952.9	1210.58	0.00	-0.72	4953.1	1210.57	0.00	-0.63	4953.4
1210.54	0.00	-0.56	4954.0	1210.52	0.00	0.83	4958.1	1210.51	0.00	0.51	4962.5
1210.45	0.00	0.35	4971.9	1210.42	0.00	0.92	4977.3	1210.32	0.00	0.82	4978.4
1209.90	0.00	0.40	4979.0	1209.26	0.00	-0.45	4982.0	1209.24	0.00	-0.36	4986.0
1209.23	0.00	-0.47	4988.0	1209.22	0.00	-0.28	4990.0	1209.21	0.00	-0.59	4993.0
1209.21	0.00	-0.49	4994.0	1209.21	0.00	-0.49	4995.0	1209.19	0.00	-0.31	4999.0
1209.18	0.00	-0.02	5001.0	1209.17	0.00	0.28	5004.0	1209.19	0.00	0.08	5009.0
1209.20	0.00	-0.20	5012.0	1209.21	0.00	0.01	5014.0	1209.63	0.00	0.52	5017.9
1210.39	-0.01	0.19	5023.2	1210.79	0.00	-0.01	5023.5	1210.79	0.00	0.00	5024.8
1214.00	0.00	0.00	5031.0	1216.50	0.00	0.00	5038.0	1216.90	0.00	0.00	5040.0

1216.70	0.00	0.00	5042.0	1216.40	0.00	0.00	5048.0	1216.50	0.00	0.00	5049.0
1216.70	0.00	0.00	5050.0	1216.70	0.00	0.00	5054.0	1216.40	0.00	0.00	5059.0
1216.60	0.00	0.00	5060.0	1216.40	0.00	0.00	5062.0	1216.60	0.00	0.00	5064.0
1216.90	0.00	0.00	5067.0	1216.40	0.00	0.00	5075.0	1216.60	0.00	0.00	5078.0
1216.60	0.00	0.00	5079.0	1216.70	0.00	0.00	5081.0	1216.40	0.00	0.00	5085.0
1216.00	0.00	0.00	5089.0	1215.80	0.00	0.00	5097.0	1216.10	0.00	0.00	5099.0
1216.20	0.00	0.00	5102.0	1216.20	0.00	0.00	5107.6	1226.20	0.00	0.00	5127.6

ID
4 SECTION 352.00 TIME = 150.12 HRS WS =1210.27 WIDTH = 70.6

Z	DZ	TDZ	Y	Z	DZ	TDZ	Y	Z	DZ	TDZ	Y
1220.40	0.00	0.00	4618.0	1220.70	0.00	0.00	4623.0	1220.30	0.00	0.00	4626.0
1220.40	0.00	0.00	4628.0	1220.40	0.00	0.00	4630.0	1220.60	0.00	0.00	4631.0
1220.60	0.00	0.00	4635.0	1219.90	0.00	0.00	4637.0	1219.90	0.00	0.00	4638.0
1219.80	0.00	0.00	4641.0	1219.90	0.00	0.00	4644.0	1219.80	0.00	0.00	4645.0
1219.90	0.00	0.00	4646.0	1220.50	0.00	0.00	4647.0	1220.40	0.00	0.00	4648.0
1220.20	0.00	0.00	4652.0	1220.30	0.00	0.00	4653.0	1220.10	0.00	0.00	4654.0
1220.10	0.00	0.00	4658.0	1220.60	0.00	0.00	4659.0	1220.40	0.00	0.00	4661.0
1220.50	0.00	0.00	4662.0	1219.90	0.00	0.00	4664.0	1220.40	0.00	0.00	4669.0
1220.00	0.00	0.00	4673.0	1220.30	0.00	0.00	4678.0	1220.00	0.00	0.00	4683.0
1220.10	0.00	0.00	4684.0	1219.70	0.00	0.00	4688.0	1220.00	0.00	0.00	4690.0
1220.10	0.00	0.00	4691.0	1220.00	0.00	0.00	4693.0	1220.00	0.00	0.00	4695.0
1220.20	0.00	0.00	4696.0	1220.20	0.00	0.00	4697.0	1220.00	0.00	0.00	4698.0
1219.80	0.00	0.00	4704.0	1220.10	0.00	0.00	4711.0	1220.20	0.00	0.00	4713.0
1220.20	0.00	0.00	4714.0	1219.60	0.00	0.00	4719.0	1220.00	0.00	0.00	4727.0
1219.90	0.00	0.00	4728.0	1219.60	0.00	0.00	4730.0	1219.40	0.00	0.00	4731.0
1219.30	0.00	0.00	4733.0	1219.50	0.00	0.00	4738.0	1219.90	0.00	0.00	4741.0
1219.80	0.00	0.00	4744.0	1219.60	0.00	0.00	4746.0	1219.80	0.00	0.00	4748.0
1219.80	0.00	0.00	4751.0	1219.70	0.00	0.00	4753.0	1219.90	0.00	0.00	4759.0
1219.40	0.00	0.00	4762.0	1219.40	0.00	0.00	4763.0	1219.50	0.00	0.00	4770.0
1219.80	0.00	0.00	4773.0	1219.70	0.00	0.00	4774.0	1219.50	0.00	0.00	4776.0
1219.50	0.00	0.00	4778.0	1219.00	0.00	0.00	4781.0	1219.20	0.00	0.00	4783.0
1219.20	0.00	0.00	4785.0	1219.50	0.00	0.00	4789.0	1219.50	0.00	0.00	4790.0
1219.10	0.00	0.00	4793.0	1219.00	0.00	0.00	4797.0	1218.80	0.00	0.00	4799.0
1219.30	0.00	0.00	4803.0	1219.20	0.00	0.00	4804.0	1219.40	0.00	0.00	4805.0
1219.40	0.00	0.00	4807.0	1219.30	0.00	0.00	4808.0	1218.80	0.00	0.00	4815.0
1218.80	0.00	0.00	4816.0	1219.30	0.00	0.00	4822.0	1219.20	0.00	0.00	4824.0
1219.20	0.00	0.00	4826.0	1219.00	0.00	0.00	4830.0	1218.70	0.00	0.00	4832.0
1218.70	0.00	0.00	4833.0	1218.90	0.00	0.00	4840.0	1218.80	0.00	0.00	4843.0
1218.60	0.00	0.00	4845.0	1218.80	0.00	0.00	4847.0	1218.40	0.00	0.00	4851.0
1218.60	0.00	0.00	4853.0	1218.60	0.00	0.00	4859.0	1218.10	0.00	0.00	4865.0
1218.20	0.00	0.00	4866.0	1218.20	0.00	0.00	4867.0	1218.70	0.00	0.00	4873.0
1218.70	0.00	0.00	4876.0	1218.20	0.00	0.00	4881.0	1218.70	0.00	0.00	4890.0
1218.60	0.00	0.00	4893.0	1218.30	0.00	0.00	4896.0	1218.60	0.00	0.00	4898.0
1218.20	0.00	0.00	4901.0	1218.30	0.00	0.00	4907.0	1218.10	0.00	0.00	4909.0
1218.10	0.00	0.00	4911.0	1217.90	0.00	0.00	4912.0	1217.90	0.00	0.00	4916.0
1216.80	0.00	0.00	4922.0	1216.30	0.00	0.00	4929.0	1214.50	0.00	0.00	4932.0
1213.50	0.00	0.00	4939.0	1212.90	0.00	0.00	4940.9	1210.80	0.00	0.00	4946.1
1210.80	0.00	0.00	4946.4	1210.20	0.00	0.00	4946.6	1210.79	0.00	-0.01	4951.9
1209.13	-0.01	-1.37	4952.1	1210.06	0.00	0.66	4962.6	1209.72	0.00	0.52	4969.0
1209.67	-0.01	0.38	4973.0	1209.61	-0.01	1.01	4978.0	1209.58	-0.01	0.78	4981.0
1209.48	-0.01	0.28	4988.0	1209.44	-0.01	0.53	4991.0	1209.39	-0.01	0.79	4994.0
1209.33	-0.01	0.63	4998.0	1209.31	-0.01	0.72	4999.0	1209.30	-0.01	0.39	5000.0
1209.27	-0.02	0.36	5002.0	1209.01	-0.02	0.61	5008.0	1209.07	-0.02	0.27	5015.0
1209.07	-0.02	-0.22	5019.0	1209.07	-0.02	-0.23	5020.9	1209.07	-0.02	-0.53	5021.8
1210.31	0.00	-1.58	5022.0	1212.49	0.00	-0.02	5023.0	1215.10	0.00	0.00	5036.0
1215.50	0.00	0.00	5038.0	1215.50	0.00	0.00	5039.0	1216.00	0.00	0.00	5040.0
1216.30	0.00	0.00	5046.0	1216.30	0.00	0.00	5047.0	1216.30	0.00	0.00	5048.0
1216.60	0.00	0.00	5050.0	1215.40	0.00	0.00	5054.0	1215.50	0.00	0.00	5055.0
1215.70	0.00	0.00	5056.0	1216.00	0.00	0.00	5058.0	1216.80	0.00	0.00	5061.0
1216.70	0.00	0.00	5064.0	1217.30	0.00	0.00	5066.0	1217.30	0.00	0.00	5067.0
1217.30	0.00	0.00	5072.0	1217.10	0.00	0.00	5076.0				

ID
3 SECTION 339.00 TIME = 150.12 HRS WS =1210.17 WIDTH = 77.8

Z	DZ	TDZ	Y	Z	DZ	TDZ	Y	Z	DZ	TDZ	Y
1220.90	0.00	0.00	4621.0	1220.90	0.00	0.00	4622.0	1220.10	0.00	0.00	4634.0

1220.10	0.00	0.00	4635.0	1220.80	0.00	0.00	4640.0	1220.80	0.00	0.00	4643.0
1220.60	0.00	0.00	4646.0	1220.30	0.00	0.00	4647.0	1220.60	0.00	0.00	4649.0
1220.70	0.00	0.00	4652.0	1220.30	0.00	0.00	4656.0	1220.70	0.00	0.00	4657.0
1220.40	0.00	0.00	4662.0	1220.70	0.00	0.00	4667.0	1220.30	0.00	0.00	4668.0
1220.40	0.00	0.00	4672.0	1219.90	0.00	0.00	4676.0	1220.00	0.00	0.00	4677.0
1220.00	0.00	0.00	4677.2	1220.40	0.00	0.00	4681.0	1219.80	0.00	0.00	4686.0
1220.40	0.00	0.00	4690.0	1220.20	0.00	0.00	4694.0	1220.30	0.00	0.00	4695.0
1220.40	0.00	0.00	4698.0	1219.90	0.00	0.00	4702.0	1219.60	0.00	0.00	4703.0
1219.80	0.00	0.00	4704.0	1220.20	0.00	0.00	4706.0	1220.00	0.00	0.00	4707.0
1220.00	0.00	0.00	4709.0	1219.80	0.00	0.00	4710.0	1219.70	0.00	0.00	4713.0
1220.20	0.00	0.00	4715.0	1219.90	0.00	0.00	4718.0	1219.75	0.00	0.00	4731.5
1219.60	0.00	0.00	4745.0	1220.10	0.00	0.00	4748.0	1219.90	0.00	0.00	4749.0
1220.10	0.00	0.00	4751.0	1220.00	0.00	0.00	4756.0	1219.40	0.00	0.00	4762.0
1220.00	0.00	0.00	4767.0	1219.80	0.00	0.00	4769.0	1220.00	0.00	0.00	4770.0
1219.70	0.00	0.00	4776.0	1220.00	0.00	0.00	4781.0	1219.90	0.00	0.00	4782.0
1220.00	0.00	0.00	4784.0	1219.70	0.00	0.00	4790.0	1220.10	0.00	0.00	4795.0
1220.00	0.00	0.00	4796.0	1219.60	0.00	0.00	4798.0	1219.90	0.00	0.00	4801.0
1219.70	0.00	0.00	4809.0	1219.40	0.00	0.00	4815.0	1220.00	0.00	0.00	4819.0
1219.50	0.00	0.00	4827.0	1219.80	0.00	0.00	4831.0	1219.30	0.00	0.00	4834.0
1219.80	0.00	0.00	4836.0	1219.10	0.00	0.00	4844.0	1219.20	0.00	0.00	4845.0
1218.90	0.00	0.00	4850.0	1219.60	0.00	0.00	4855.0	1218.80	0.00	0.00	4862.0
1219.30	0.00	0.00	4866.0	1219.30	0.00	0.00	4867.0	1219.50	0.00	0.00	4869.0
1219.20	0.00	0.00	4877.0	1219.00	0.00	0.00	4882.0	1219.40	0.00	0.00	4885.0
1219.30	0.00	0.00	4888.0	1218.80	0.00	0.00	4893.0	1219.00	0.00	0.00	4898.0
1218.80	0.00	0.00	4899.0	1219.00	0.00	0.00	4903.0	1218.70	0.00	0.00	4904.0
1218.50	0.00	0.00	4909.0	1218.20	0.00	0.00	4911.0	1218.30	0.00	0.00	4916.0
1217.80	0.00	0.00	4921.0	1216.30	0.00	0.00	4927.0	1216.20	0.00	0.00	4928.0
1216.30	0.00	0.00	4930.0	1215.90	0.00	0.00	4931.0	1214.80	0.00	0.00	4934.0
1214.40	0.00	0.00	4936.0	1213.00	0.00	0.00	4939.0	1212.09	0.00	0.39	4942.3
1211.96	0.00	0.47	4943.5	1210.71	0.00	0.00	4947.4	1209.91	0.00	0.21	4952.3
1209.86	0.00	0.15	4960.7	1209.85	0.00	0.65	4966.5	1209.85	0.00	1.46	4968.6
1209.83	0.00	0.93	4975.0	1209.79	0.00	0.89	4976.0	1209.71	0.00	0.81	4978.0
1209.62	0.00	0.72	4980.0	1209.52	0.00	0.93	4982.0	1209.38	-0.01	0.89	4986.0
1209.30	-0.01	0.61	4988.0	1209.06	-0.01	0.36	4994.0	1208.94	-0.01	0.04	4997.0
1208.92	-0.01	0.02	4998.0	1208.90	-0.01	0.30	5003.0	1208.90	-0.01	0.50	5007.0
1208.91	-0.01	0.30	5009.0	1208.91	-0.01	0.21	5010.0	1209.17	-0.01	0.48	5019.0
1209.73	0.00	0.33	5026.5	1210.11	0.00	0.40	5028.3	1210.17	0.00	0.27	5028.5
1210.21	0.00	0.21	5028.8	1210.23	0.00	0.33	5029.2	1210.27	0.00	0.07	5029.8
1212.50	0.00	0.00	5035.0	1214.10	0.00	0.00	5039.0	1215.60	0.00	0.00	5046.0
1215.40	0.00	0.00	5047.0	1216.60	0.00	0.00	5055.0	1217.20	0.00	0.00	5058.0
1217.20	0.00	0.00	5062.0	1217.60	0.00	0.00	5072.0	1217.40	0.00	0.00	5074.0
1217.50	0.00	0.00	5076.0	1217.80	0.00	0.00	5078.0				

ID
2 SECTION 218.00 TIME = 150.12 HRS WS =1208.50 WIDTH = 82.1

Z	DZ	TDZ	Y	Z	DZ	TDZ	Y	Z	DZ	TDZ	Y
1221.30	0.00	0.00	4621.0	1221.10	0.00	0.00	4623.0	1221.00	0.00	0.00	4624.0
1221.00	0.00	0.00	4625.0	1220.90	0.00	0.00	4631.0	1221.00	0.00	0.00	4632.0
1221.30	0.00	0.00	4634.0	1221.20	0.00	0.00	4636.0	1221.40	0.00	0.00	4638.0
1220.90	0.00	0.00	4643.0	1221.30	0.00	0.00	4647.0	1220.80	0.00	0.00	4657.0
1220.80	0.00	0.00	4658.0	1221.30	0.00	0.00	4664.0	1220.70	0.00	0.00	4674.0
1220.90	0.00	0.00	4675.0	1221.20	0.00	0.00	4680.0	1221.20	0.00	0.00	4683.0
1220.40	0.00	0.00	4690.0	1220.70	0.00	0.00	4692.0	1220.90	0.00	0.00	4697.0
1220.80	0.00	0.00	4699.0	1220.80	0.00	0.00	4700.0	1220.40	0.00	0.00	4707.0
1220.80	0.00	0.00	4712.0	1220.90	0.00	0.00	4718.0	1220.40	0.00	0.00	4723.0
1220.80	0.00	0.00	4729.0	1220.90	0.00	0.00	4731.0	1220.70	0.00	0.00	4733.0
1220.80	0.00	0.00	4734.0	1220.20	0.00	0.00	4739.0	1220.60	0.00	0.00	4745.0
1220.50	0.00	0.00	4750.0	1220.70	0.00	0.00	4751.0	1220.20	0.00	0.00	4754.0
1220.60	0.00	0.00	4762.0	1220.20	0.00	0.00	4766.0	1220.20	0.00	0.00	4768.0
1220.10	0.00	0.00	4769.0	1220.00	0.00	0.00	4773.0	1220.70	0.00	0.00	4777.0
1220.00	0.00	0.00	4784.0	1220.10	0.00	0.00	4786.0	1220.40	0.00	0.00	4787.0
1219.90	0.00	0.00	4789.0	1220.40	0.00	0.00	4792.0	1219.90	0.00	0.00	4802.0
1219.90	0.00	0.00	4804.0	1220.50	0.00	0.00	4807.0	1220.20	0.00	0.00	4810.0
1220.10	0.00	0.00	4812.0	1219.80	0.00	0.00	4815.0	1220.10	0.00	0.00	4818.0
1220.00	0.00	0.00	4819.0	1220.20	0.00	0.00	4821.0	1220.40	0.00	0.00	4822.0
1219.20	0.00	0.00	4826.0	1219.90	0.00	0.00	4837.0	1219.20	0.00	0.00	4845.0
1219.30	0.00	0.00	4846.0	1219.70	0.00	0.00	4852.0	1219.90	0.00	0.00	4853.0
1219.50	0.00	0.00	4854.0	1219.30	0.00	0.00	4855.0	1219.40	0.00	0.00	4863.0
1219.20	0.00	0.00	4865.0	1219.10	0.00	0.00	4869.0	1219.10	0.00	0.00	4870.0

1218.70	0.00	0.00	4874.0	1218.80	0.00	0.00	4881.0	1219.20	0.00	0.00	4882.0
1219.20	0.00	0.00	4901.5	1219.20	0.00	0.00	4921.0	1217.50	0.00	0.00	4936.0
1216.70	0.00	0.00	4940.0	1215.40	0.00	0.00	4943.0	1214.70	0.00	0.00	4943.2
1214.10	0.00	0.00	4945.0	1210.57	0.00	0.07	4952.8	1210.12	0.00	0.02	4956.1
1209.70	0.00	0.00	4956.5	1208.40	-0.01	0.50	4956.8	1208.22	0.00	0.81	4958.4
1208.17	0.00	1.07	4981.0	1208.17	0.00	1.07	4986.0	1208.16	0.00	0.85	4987.0
1208.16	0.00	0.76	4989.0	1208.17	0.00	1.06	4995.0	1208.17	0.00	1.05	4998.0
1207.16	0.01	0.15	5001.0	1207.17	0.01	-0.34	5004.0	1207.18	0.01	-0.23	5007.0
1207.20	0.01	0.10	5010.0	1207.21	0.01	0.11	5012.0	1207.21	0.01	-0.79	5016.0
1207.26	0.00	-0.44	5031.6	1210.42	0.00	1.81	5049.9	1210.45	0.00	2.25	5050.1
1210.56	0.00	0.16	5050.7	1212.60	0.00	0.00	5055.0	1215.30	0.00	0.00	5064.0
1216.90	0.00	0.00	5072.0	1217.00	0.00	0.00	5072.2	1217.00	0.00	0.00	5074.0
1217.40	0.00	0.00	5079.0	1217.20	0.00	0.00	5080.0	1217.30	0.00	0.00	5083.0
1217.10	0.00	0.00	5086.0	1217.30	0.00	0.00	5087.0	1217.20	0.00	0.00	5090.0
1217.60	0.00	0.00	5093.0	1217.90	0.00	0.00	5095.0	1217.90	0.00	0.00	5096.0
1217.40	0.00	0.00	5099.0	1217.70	0.00	0.00	5104.0	1217.50	0.00	0.00	5105.0
1217.80	0.00	0.00	5110.0	1217.80	0.00	0.00	5111.0	1217.70	0.00	0.00	5119.0
1217.80	0.00	0.00	5121.0	1217.50	0.00	0.00	5124.0	1217.80	0.00	0.00	5128.0
1217.30	0.00	0.00	5137.0	1217.50	0.00	0.00	5138.0	1217.90	0.00	0.00	5149.0
1217.40	0.00	0.00	5154.0	1217.30	0.00	0.00	5160.0	1217.50	0.00	0.00	5166.0
1217.00	0.00	0.00	5169.0	1216.80	0.00	0.00	5180.0	1217.30	0.00	0.00	5185.0
1217.20	0.00	0.00	5191.0	1217.10	0.00	0.00	5192.0	1216.90	0.00	0.00	5197.0
1216.60	0.00	0.00	5199.0	1216.50	0.00	0.00	5200.0	1216.90	0.00	0.00	5203.0
1216.10	0.00	0.00	5209.0	1216.60	0.00	0.00	5222.0	1216.40	0.00	0.00	5223.0

BLACKHALL STUDIOS-SANTA CLARITA
TENTATIVE TRACT MAP 083513

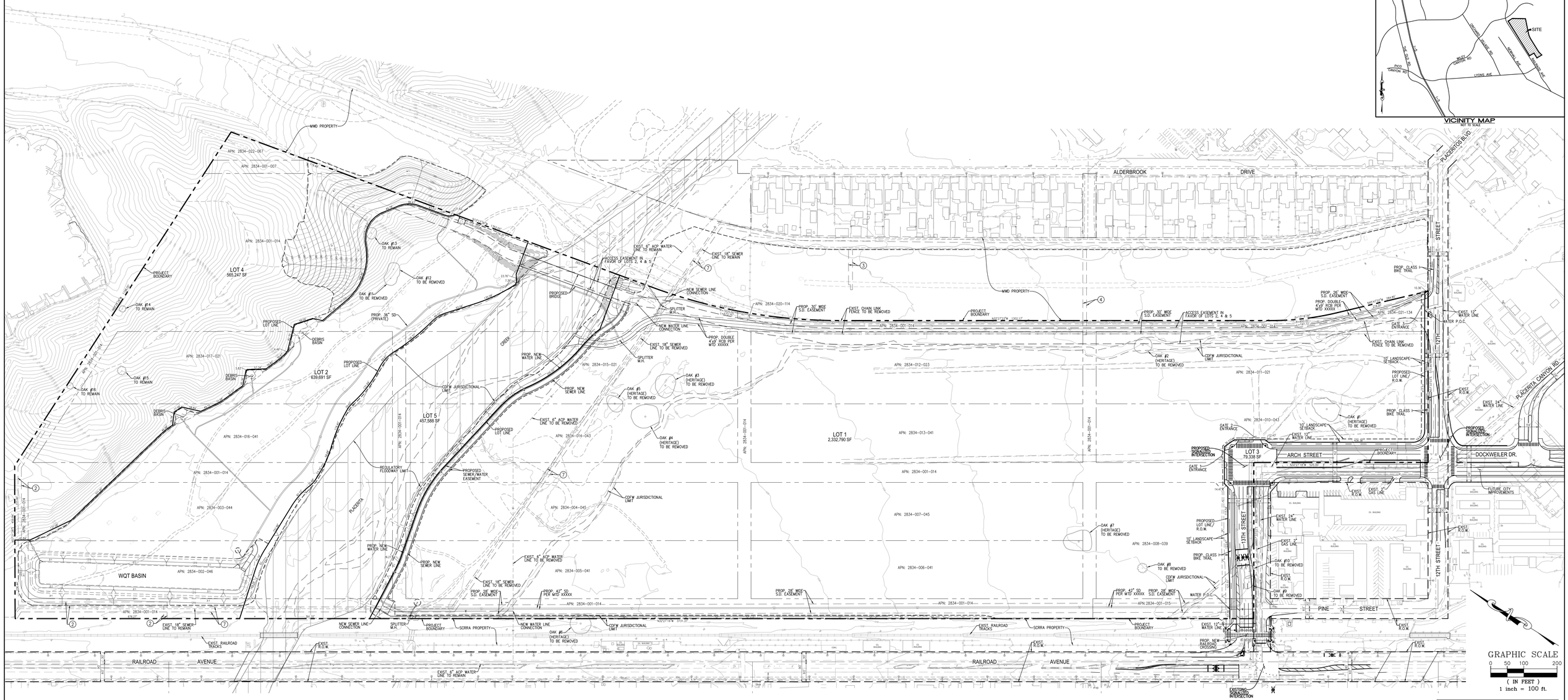

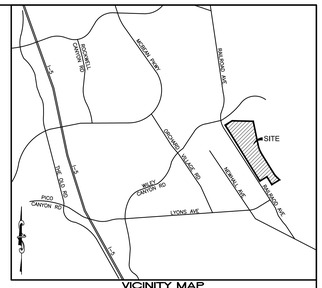

LEGAL DESCRIPTION:

THE LAND REFERRED TO HEREIN BELOW IS SITUATED IN THE CITY OF SANTA CLARITA IN THE COUNTY OF LOS ANGELES, STATE OF CALIFORNIA, AND IS DESCRIBED AS FOLLOWS:

PARCEL 1:

LOTS 1 AND 4 THROUGH 8 INCLUSIVE OF BLOCK 202, LOTS 18 THROUGH 20 INCLUSIVE, OF BLOCK 203; LOTS 1 THROUGH 40 INCLUSIVE OF BLOCK 204; LOTS 1 THROUGH 13 INCLUSIVE OF BLOCK 205; LOTS 1 THROUGH 60 INCLUSIVE OF BLOCK 206; LOTS 1 THROUGH 60 INCLUSIVE OF BLOCK 207; LOTS 1 THROUGH 60 INCLUSIVE OF BLOCK 208; LOTS 1 THROUGH 58 INCLUSIVE OF BLOCK 209, LOTS 1 THROUGH 38 INCLUSIVE OF BLOCK 211; LOTS 1 THROUGH 80 INCLUSIVE OF BLOCK 212; LOTS 1 THROUGH 80 INCLUSIVE OF BLOCK 213 AND LOTS 1 THROUGH 86 INCLUSIVE OF BLOCK 214, ALL OF TRACT NO. 1078, IN THE COUNTY OF LOS ANGELES, STATE OF CALIFORNIA, AS PER MAP RECORDED IN BOOK 18, PAGE 169 OF MAPS, IN THE OFFICE OF THE COUNTY RECORDER OF SAID COUNTY.

EXCEPT THEREFROM THAT PORTION THEREOF INCLUDED WITHIN THE LINES OF THAT CERTAIN STRIP OF LAND 250 FEET WIDE DESCRIBED IN THE DEED TO THE METROPOLITAN WATER DISTRICT OF SOUTHERN CALIFORNIA RECORDED ON JULY 18, 1967 AS INSTRUMENT NO. 559 IN BOOK D-3705, PAGE 699 OFFICIAL RECORDS, AND RECORDED JULY 26, 1967 AS INSTRUMENT NO. 3346 IN BOOK D-3714, PAGE 926 OFFICIAL RECORDS.

ALSO EXCEPT FROM SAID LOT 1 OF BLOCK 202 OF TRACT NO. 1078, ONE HALF OF ALL OIL, GAS, MINERALS AND OTHER HYDROCARBON SUBSTANCES LYING IN OR UNDER SAID LAND WITHOUT THE RIGHT TO ENTER UPON THE SURFACE THEREOF TO A DEPTH OF 500 FEET, AS RESERVED BY MICHAEL MANCINO, A SINGLE MAN, IN DEED RECORDED JULY 15, 1963 AS INSTRUMENT NO. 5131 IN BOOK D-2104, PAGE 54 OFFICIAL RECORDS.

APN(S): 2834-001-013, 2834-002-046, 2834-003-044, 2834-004-045, 2834-005-041, 2834-006-041, 2834-007-045, 2834-008-039, 2834-010-043, 2834-011-021, 2834-012-023, 2834-013-041, 2834-014-043, 2834-015-021, 2834-016-041, 2834-017-021, AND A PORTION OF 2834-001-014, 2834-020-114, 2834-021-134.

PARCEL 2:

LOTS 2 AND 3 OF BLOCK 202 OF TRACT NO. 1078, IN THE CITY OF LOS ANGELES, COUNTY OF LOS ANGELES, STATE OF CALIFORNIA, AS PER MAP RECORDED IN BOOK 18, PAGE 169 OF MAPS, IN THE OFFICE OF THE COUNTY RECORDER OF SAID COUNTY.

EXCEPT THOSE PORTIONS LYING NORTHEASTERLY OF A LINE WHICH IS PARALLEL WITH AND 125 FEET SOUTHWESTERLY, MEASURED AT RIGHT ANGLES OR RADIALLY FROM THE FOLLOWING DESCRIBED TRAVERSE LINE:

BEGINNING AT A POINT ON THE SOUTHEASTERLY LINE OF SAID BLOCK 202 DISTANT THEREON SOUTH 57° 32' 13" WEST 225.83 FEET FROM THE SOUTHEAST CORNER OF SAID BLOCK 202; THENCE NORTH 45° 47' 52" WEST 314.01 FEET TO THE BEGINNING OF A CURVE CONCAVE TO THE NORTHEAST TANGENT TO SAID LAST MENTIONED COURSE, AND HAVING A RADIUS OF 725 FEET; THENCE NORTHWESTERLY ALONG SAID CURVE THROUGH A CENTRAL ANGLE OF 13° 20' 17" AN ARC DISTANCE OF 168.78 FEET; THENCE NORTH 32° 27' 35" WEST TANGENT TO SAID CURVE ALONG A LINE WHICH IS PARALLEL FROM AND DISTANT 117.80 FEET NORTHEASTERLY MEASURED AT RIGHT ANGLES FROM THE SOUTHWESTERLY LINES OF SAID BLOCK 202 AND BLOCK 203 OF SAID TRACT NO. 1078, A DISTANCE OF 1302.54 FEET TO A POINT WHICH IS DISTANT SOUTH 32° 27' 35" EAST ALONG SAID PARALLEL LINE 264.55 FEET FROM THE NORTHWESTERLY LINE OF SAID BLOCK 203, SAID POINT BEING ALSO THE BEGINNING OF A CURVE CONCAVE TO THE NORTHEAST TANGENT TO SAID LAST MENTIONED COURSE AND HAVING A RADIUS OF 1500 FEET; THENCE NORTHWESTERLY ALONG SAID LAST MENTIONED CURVE THROUGH A CENTRAL
ANGLE OF 20° 14' 55" AN ARC DISTANCE OF 530.11 FEET.

ALSO EXCEPTING FROM SAID LOT 2, ONE HALF OF ALL OIL, PETROLEUM, GAS, BREA, HYDROCARBONS AND ALL KINDRED SUBSTANCES LOCATED IN, ON, AND UNDER SAID LAND WHICH MAY BE PRODUCED THEREFROM OR THEREON AS RESERVED BY LOUIS MATTIS AND MINNIE MATTIS, HUSBAND AND WIFE, IN DEED RECORDED JUNE 8, 1953 IN BOOK 41909, PAGE 303 OFFICIAL RECORDS.

ALSO EXCEPTING FROM SAID LOT 2, ONE QUARTER OF ALL OIL, GAS, ASPHALTUM AND OTHER HYDROCARBON SUBSTANCES UNDERLYING SAID LAND OR THAT MAY BE PRODUCED THEREON OR THEREFROM AS RESERVED BY ROBERT T. WILKE AND MARGARET L. WILKE, HUSBAND AND WIFE, IN DEED RECORDED AUGUST 4, 1953 AS INSTRUMENT NO. 349 IN BOOK 42378, PAGE 100 OFFICIAL RECORDS.

ALSO EXCEPTING FROM SAID LOT 3, 50 PERCENT OF ALL OIL, GAS, PETROLEUM, BREA, HYDROCARBONS AND ALL KINDRED SUBSTANCES LOCATED IN, ON, AND UNDER SAID LAND WHICH MAY BE PRODUCED THEREFROM OR THEREON AS RESERVED BY LOUIS MATTIS AND MINNIE MATTIS, HUSBAND AND WIFE, IN DEED RECORDED JANUARY 11, 1952 IN BOOK 38025, PAGE 205 OFFICIAL RECORDS.

ALSO EXCEPTING FROM SAID LOT 3, ONE QUARTER OF ALL OIL, GAS, ASPHALTUM AND OTHER HYDROCARBON SUBSTANCES UNDERLYING SAID PROPERTY, AS RESERVED BY ROBERT T. WILKE AND MARGARET L. WILKE, HUSBAND AND WIFE, IN DEED RECORDED MAY 27, 1952 IN BOOK 39026, PAGE 128 OFFICIAL RECORDS.

APN: A PORTION OF 2834-021-134

PARCEL 3:

THAT PORTION OF LOTS A AND 123 OF TRACT NO. 1079, IN THE COUNTY OF LOS ANGELES, STATE OF CALIFORNIA, AS PER MAP RECORDED IN BOOK 18, PAGE 155 OF MAPS, IN THE OFFICE OF THE COUNTY RECORDER OF SAID COUNTY, LYING WESTERLY OF THE WESTERLY LINE OF THAT CERTAIN STRIP OF LAND 250 FEET WIDE DESCRIBED IN THE DEEDS TO THE METROPOLITAN WATER DISTRICT OF SOUTHERN CALIFORNIA, RECORDED ON JULY 18, 1967 AS INSTRUMENT NO. 559 IN BOOK D-3705, PAGE 699 OFFICIAL RECORDS AND JULY 26, 1967 AS INSTRUMENT NO. 3346 IN BOOK D-3714, PAGE 926 OFFICIAL RECORDS.

APN: 2834-022-067

PARCEL 4:

LOTS B, E, F, G, H, L, M, N, O, P, Q, R, THAT PORTION OF LOT A LYING NORTHWESTERLY OF THE NORTHEASTERLY PROLONGATION OF THE SOUTHEASTERLY LINE OF LOT 21 OF BLOCK 204, THAT PORTION OF LOT C LYING NORTHWESTERLY OF THE SOUTHWESTERLY PROLONGATION OF THE SOUTHEASTERLY LINE OF LOT 22 OF BLOCK 206, AND THAT PORTION OF LOT D LYING NORTHWESTERLY OF THE SOUTHWESTERLY PROLONGATION OF THE SOUTHEASTERLY LINE OF LOT 1 OF BLOCK 211, ALL OF TRACT NO. 1078, IN THE COUNTY OF LOS ANGELES, STATE OF CALIFORNIA, AS PER MAP RECORDED IN BOOK 18, PAGE 169 OF MAPS, IN THE OFFICE OF THE COUNTY RECORDER OF SAID COUNTY.

EXCEPT THEREFROM THAT PORTION THEREOF INCLUDED WITHIN THE LINES OF THAT CERTAIN STRIP OF LAND 250 FEET WIDE DESCRIBED IN THE DEED TO THE METROPOLITAN WATER DISTRICT OF SOUTHERN CALIFORNIA, RECORDED ON JULY 18, 1967 AS INSTRUMENT NO. 559 IN BOOK D-3705, PAGE 699 OFFICIAL RECORDS, AND RECORDED JULY 26, 1967 AS INSTRUMENT NO. 3346 IN BOOK D-3714, PAGE 926 OFFICIAL RECORDS.

APN(S): 2834-001-007, 2834-001-012, 2834-001-015, 2834-020-111, 2834-020-113, AND A PORTION OF 2834-001-014,
2834-020-114

EASEMENTS BASED ON FIDELITY NATIONAL TITLE COMPANY PRELIMINARY TITLE REPORT ORDER NO. 012-30040807-C-TS4 DATED NOVEMBER MARCH 5, 2020.

TITLE REPORT ITEM NO.	OWNER	PURPOSE	REFERENCE	FUTURE DISPOSITION	ADDITIONAL COMMENTS	TENTATIVE MAP SHEET NO.
②	SOUTHERN CALIFORNIA GAS COMPANY	PIPE LINE	FEBRUARY 15, 1954 INST. NO. 2815 IN BOOK 43827, PAGE 29 OF OFFICIAL RECORDS	TO BE QUITCLAIMED	10' WIDE EASEMENT LOCATED ALONG NORTHWEST CORNER OF PROJECT BOUNDARY	1
③	SOUTHERN CALIFORNIA EDISON COMPANY	POLE LINES	MAY 25, 1960 INST. NO. 3468 IN BOOK D-857, PAGE 934 OF OFFICIAL RECORDS	TO BE QUITCLAIMED	10' WIDE EASEMENT LOCATED WITHIN MWD PROPERTY	1
④	SOUTHERN CALIFORNIA GAS COMPANY	PIPE LINE	MAY 27, 1960 INST. NO. 5518 IN BOOK D-861 PAGE 725 OF OFFICIAL RECORDS	PORTION TO BE QUITCLAIMED	10' WIDE EASEMENT LOCATED WITHIN MWD PROPERTY AND EXTENDED APPROXIMATELY 11' ONTO PROP. PROJECT	1
⑦	CITY OF SANTA CLARITA	SEWER PIPE LINE	OCTOBER 25, 2004 INST. NO. 04-2741663 OF OFFICIAL RECORDS JULY 11, 2006 INST. NO. 07-2031224 OF OFFICIAL RECORDS	PORTIONS TO BE QUITCLAIMED & RELOCATED	15' EASEMENT ALONG NORTHWEST PROJECT BOUNDARY & CROSSING NORTHERN PORTION OF SITE TO THE EASTERN PROJECT BOUNDARY	1

PROJECT SUMMARY:

GROSS AREA:	93.5 AC
TOTAL LOTS:	5
EXISTING ZONING:	NU-5
PROPOSED ZONING:	MX-N WITH JCOZ OVERLAY
SOUND STAGES	473,225 SF
PRODUCTION SUPPORT BLDG.	567,170 SF
OFFICE BUILDING	197,670 SF
CATERING BUILDING	24,677 SF
CAFE	1,540 SF
GYM	5,400 SF
CAR WASH/DETAIL	3,600 SF
FACILITIES/TRANS	9,100 SF

NOTES:

1. PARKING STALLS ARE 9' LONG X 18' WIDE.
2. MAXIMUM BLDG. HEIGHT IS 55'.
3. ALL ON-SITE STORM DRAIN SYSTEMS ARE PRIVATELY MAINTAINED.

EARTHWORK SUMMARY:

CUT: 400,000 cy
FILL: 320,000 cy
OVEREX: 800,000 cy (10% SHRINK= 80,000 cy)
IMPORT/EXPORT: 0 cy

OWNER:

LA RAILROAD 93, LLC
C/O BLACKHALL STUDIOS
1415 CONSTITUTION ROAD SE
ATLANTA, GA 30316
PHONE: (949) 955-3555
ATTN: JEFF WEBER

LOT SUMMARY:

LOT NOs.	PROJECT/USE	COMM/OFFICE SF	ACREAGE
1	SOUND STAGES, SUPPORT BLDGS, OFFICE, CATERING, CAFE, WASH/DETAIL, GYM AND FACILITIES/TRANS	1,293,162 SF	53.5 AC
2	PARKING		14.7 AC
3	PUBLIC STREETS		1.8 AC
4	OPEN SPACE		13.0 AC
5	CREEK		10.5 AC
TOTAL:		1,293,162 SF	93.5 AC

GENERAL NOTES:

1. LOT LINES CAN BE ADJUSTED, ADDITIONAL RESIDENTIAL OR COMMERCIAL LOTS MAY BE CREATED TO THE SATISFACTION OF THE CITY PLANNING DEPARTMENT.
2. ALIGNMENT AND GEOMETRICS OF STREETS ARE APPROXIMATE. ADJUSTMENTS TO STREETS CAN BE MADE WITH APPROVAL BY THE CITY OF SANTA CLARITA PLANNING DEPARTMENT AND THE ENGINEERING DEPARTMENTS.
3. GRADES SHOWN ON THIS TENTATIVE MAP ARE APPROXIMATE, GRADES MAY DEVIATE UP TO TEN FEET WITH APPROVAL OF CITY PLANNING AND ENGINEERING DEPARTMENTS.
4. PERMISSION IS REQUESTED TO CREATE ADDITIONAL LANDSCAPE/OPEN SPACE OR PUBLIC USE LOTS TO THE SATISFACTION OF THE CITY PLANNING DEPARTMENT.
5. PERMISSION IS REQUESTED TO RECORD ADDITIONAL UTILITY LOTS AND PROVIDE MAINTENANCE EASEMENTS TO THE SATISFACTION OF THE CITY OF SANTA CLARITA PLANNING AND ENGINEERING DEPARTMENTS.
6. THE LOCATIONS OF APPURTENANT STRUCTURES (E.G., PASEOS, TRANSIT SHELTERS, WATER QUALITY BASINS, ETC.) MAY BE RELOCATED TO THE SATISFACTION OF THE CITY OF SANTA CLARITA PLANNING AND ENGINEERING DEPARTMENTS.
7. PERMISSION IS REQUESTED TO MASS GRADE.

FLOOD ZONE:

THE PROPERTY LIES WITHIN ZONES "A" & "X" OF THE FLOOD INSURANCE RATE MAP 06037C0820F BEARING AN EFFECTIVE DATE OF SEPTEMBER 26, 2008

BASIS OF BEARINGS:

THE BEARINGS ON THIS MAP ARE GRID, BASED ON THE ABOVE LDP PROJECTION DEFINITION (USING TIES TO LOCAL CORS/CGPS STATIONS). - RESULTING IN A BEARING OF NORTH 00° 30' 25" EAST FOR THE CENTERLINE OF ROSE AVENUE (FROM EASTMAN AVENUE TO CAMINO DEL SOL).

BENCH MARK:

BM: R-1469 ELEV: 1217.72
A STAINLESS STEEL ROD STAMPED "R 1469 1994" IN A SLEEVE WITH A FIVE INCH LOGO CAP 1.20 MILES NORTHWESTERLY ALONG SAN FERNANDO RD. FOR THE JUNCTION OF SIERRA HWY IN NEWHALL, THENCE 1.35 MILES NORTHWESTERLY ALONG SOUTHERN PACIFIC RAILROAD, 41.3 FEET NORTHEAST OF THE NORTHEAST CURB OF THE ROAD, 12.5 FEET SOUTHWEST OF THE NEAR RAIL, 2.0 FEET BELOW THE LEVEL OF THE TRACK AND 1.6 FEET EAST OF THE SOUTH WEST WINGWALL OF THE SOUTHEAST ABUTMENT OF THE RAILROAD BRIDGE SPANNING PLACERITA CREEK.
NEWHALL QUAD 1994

ASSESSOR PARCEL NUMBER:

2834-001-007; 2834-001-014; 2834-001-015; 2834-002-046;
2834-003-044; 2834-004-045; 2834-005-041; 2834-006-041;
2834-007-045; 2834-008-039; 2834-010-043; 2834-011-021;
2834-012-023; 2834-013-041; 2834-014-043; 2834-015-021;
2834-016-041; 2834-017-021; 2834-020-114; 2834-021-134;
2834-022-067

ABBREVIATIONS:

AC	ACRES
APWA	AMERICAN PUBLIC WORKS ASSOCIATION
BVC	BEGINING VERTICAL CURB
ECV	END VERTICAL CURB
EX	EXISTING
FF	FINISH FLOOR
FM	FORCE MAIN
FS	FINISHED SURFACE
FW	FIRE WATER
GB	GRADE BREAK
HP	HIGH POINT
L	LENGTH
MIN	MINIMUM
P.C.C.	PORTLAND CEMENT CONCRETE
PI	POINT OF INTERSECTION
PROP	PROPOSED
R	RADIUS
R/W	RIGHT OF WAY
SF	SQUARE FOOT
SD	STORM DRAIN
SS	SANITARY SEWER
STD	STANDARD
TBI	TO BE IMPACTED
TBR	TO BE REMOVED
TR	TO REMAIN
W	WATER

PUBLIC UTILITIES:

CABLE TV	CHARTER/SPECTRUM 14221 COVELLO STREET VAN NUYS, CA 91405
ELECTRIC	SOUTHERN CALIFORNIA EDISON 28460 AVENUE STANFORD VALENCIA, CA 91355
GAS	SOUTHERN CA. GAS COMPANY PO BOX 2300 CHATSWORTH, CA 91313
SEWER	LOS ANGELES COUNTY SANITATION DISTRICT 1955 WORKMAN MILL ROAD WHITTIER, CA 90601
TELEPHONE	AT&T 2655 E. AVENUE Q PALMDALE, CA 93550
WATER	SANTA CLARITA VALLEY WATER 23920 VALENCIA BLVD., SUITE 140 SANTA CLARITA, CA 91355

LEGEND:

- TRACT BOUNDARY
- 1600 EXISTING CONTOUR
- 1600 PROPOSED CONTOUR
- PROPOSED DAYLIGHT LINE
- EXISTING PARCEL LINE
- PROPOSED LOTLINE
- PROPOSED RIGHT OF WAY
- EXISTING RIGHT OF WAY
- PROPOSED CURB
- EXISTING CURB
- SD PROPOSED STORM DRAIN (PRIVATE)
- SD EXISTING STORM DRAIN
- S PROPOSED SEWER (PRIVATE)
- S EXISTING SEWER
- W PROPOSED WATER
- W EXISTING WATER
- f PROPOSED FIRE
- f EXISTING FIRE
- G PROPOSED GAS LINE
- G EXISTING GAS LINE
- JT PROPOSED JOINT TRENCH
- JT EXISTING JOINT TRENCH
- PROPOSED FIRE HYDRANT
- T UNDERGROUND ADS WATER QUALITY TREATMENT UNIT
- T ELECTRICAL TRANSFORMER
- TRASH ENCLOSURE
- PATH OF TRAVEL

ALLIANCE LAND PLANNING & ENGINEERING INC.
2248 FARADAY AVE.
CARLSBAD, CA 92008
TEL: (760) 431-9896
FAX: (760) 431-8902
27413 TOURNEY ROAD
SUITE 120
VALENCIA, CA 91355
TEL: (661) 799-2760
CIVIL ENGINEERING • LAND PLANNING • HILLSIDE DESIGN • SURVEYING

PLAN PREPARED FOR:
LA RAILROAD 93, LLC
C/O BLACKHALL STUDIOS
1415 CONSTITUTION ROAD SE
ATLANTA, GA 30316
(949) 955-3555
ATTN: JEFF WEBER

PLANS PREPARED BY:
ALLIANCE LAND PLANNING & ENGINEERING INC.
2248 FARADAY AVE.
CARLSBAD, CA 92008
(760) 431-9896
PLANS PREPARED UNDER THE DIRECTION OF:
CRAIG M. WHITTEKER R.C.E. 51929 — 9/24/21 DATE

REGISTERED PROFESSIONAL ENGINEER CRAIG M. WHITTEKER NO. 51929 EXP. 6-30-22 CIVIL STATE OF CALIFORNIA

NO.	DATE	REVISIONS	BY	APPR

SHEET 1 OF 3 SHEETS
CITY OF SANTA CLARITA
BLACKHALL STUDIOS - SANTA CLARITA
TENTATIVE TRACT MAP 083513

I:\CAD\2026\TENTATIVE MAP\2026_TENTATIVE_MAP.dwg

BLACKHALL STUDIOS - SANTA CLARITA, CA
SITE PLAN
9/24/2021

SITE PLAN - SCHEME 53-13a
NET SITE AREA

SF		7077%
ACRES		4.374 GSD
HECTARES		48.54

BLDG #	BUILDING NAME	TYPE	PRODUCTION	PROD SUPP	W/L+SHOP	MIX	USES: OFFICE	GYM	LIMITED EMPL	CAR WASH	OUTDOOR SPA	AREA (SQ. FT.)	PARKING	COVERED
	Stages													
1	Sound Stage	B1	21,465									21,465		
2	Sound Stage	B1	21,465									21,465		
3	Sound Stage	B1	21,465									21,465		
4	Sound Stage	B1	21,465									21,465		
5	Sound Stage	A1	44,550									44,550		
6	Sound Stage	D	27,360									27,360		
7	Sound Stage	D	27,360									27,360		
8	Sound Stage	D	27,360									27,360		
9	Sound Stage	D	27,360									27,360		
10	Sound Stage	B	21,725									21,725		
11	Sound Stage	B	21,725									21,725		
12	Sound Stage	B	21,725									21,725		
13	Sound Stage	B	21,725									21,725		
14	Sound Stage	B	21,725									21,725		
15	Sound Stage	B	21,725									21,725		
16	Sound Stage	B	21,725									21,725		
17	Sound Stage	B	21,725									21,725		
18	Sound Stage	C	49,500									49,500		
19	Sound Stage	C	10,885									10,885		
	Sound Stage Subtotal		471,320									471,320		0
20	Back Lot Cafe							1,540			760	1,540		
	Outdoor Dining								1,540					
	Cafe Subtotal											1,540		
21	Production Support													
	Production Support - 21A	A		13,932			1,100					14,032		
	1st Level			13,932			1,100					14,032		
	2nd Level													
	Production Support - 21B	B		10,460			1,540					14,541		
	1st Level			12,481			1,540							
	2nd Level													
	Production Support - 21C	C		22,460			1,100					34,141		
	1st Level			12,481			1,100					34,141		
	2nd Level													
	Production Support - 21D	D		10,520			1,540					34,531		
	1st Level			13,532			1,540					34,531		
	2nd Level													
	Production Support - 21E	E		7,848								7,848		
	Dept Lighting 1st level			7,848								7,848		
	Dept Lighting 2nd level													
	Production Support - 21F	F		13,532			1,100					34,632		
	1st Level			13,532			1,100					34,632		
	2nd Level													
	Production Support - 21G	G		12,460			1,100					34,142		
	1st Level			12,460			1,100					34,142		
	2nd Level													
	Production Support - 21H	H		12,882			1,100					34,142		
	1st Level			12,482			1,100					34,142		
	2nd Level													
	Production Support - 21J	J		10,902			1,100					34,002		
	1st Level			10,902			1,100					34,002		
	2nd Level													
	Production Support Subtotal			343,476			22,980					347,178		0
22	Parking Structure													
	1st Level Parking													
	Security						405					405	40,310	
	Lift/Stairs												722	
	Mail Room/Storage			10,975								10,975		
	2nd Level Parking												42,760	
	Lift/Stairs												722	
	3rd Level Parking												42,760	
	Lift/Stairs												722	
	4th Level Parking												32,292	
	Lift/Stairs												722	
	Roof Parking												31,250	
	Lift/Stairs												722	
	Parking Structure Subtotal			10,975			810					10,786	301,792	
23	Office Building													
	1st Level						64,182		2,961			58,154		
	2nd Level						64,182					64,182		
	3rd Level						64,154					64,154		
	Office Building Subtotal						192,498	0	2,961			187,478		
24	Catering													
									24,677			24,677		
	Catering Subtotal								24,677			24,677		
25	Gym							5,440				5,440		
	Gym							5440				5440		
26	Wrap/Jacket													
26	Wrap/Jacket									3,536		3,536		
26	Jacket													
	Wrap/Jacket Subtotal									3,536		3,536		
27	Facilities/Trans													
			2,580	4,520	3,100							9,100		
	Facilities/Trans Subtotal		2,580	4,520	3,100							9,100		
	Sub Total Acre without parking deck		471,320	553,243	3,100	4,520	215,814	0	28,478	3,536		1,200,192	301,792	0
	Total Area with parking structure												1,573,093	
	Total Area with PS and covered PARKING													1,573,093
	FAR											26.2%		
												31.7%		

Parking		Provided
Spaces	2,392	2,470*

* 78 Additional Spaces Provided Above Code Requirement

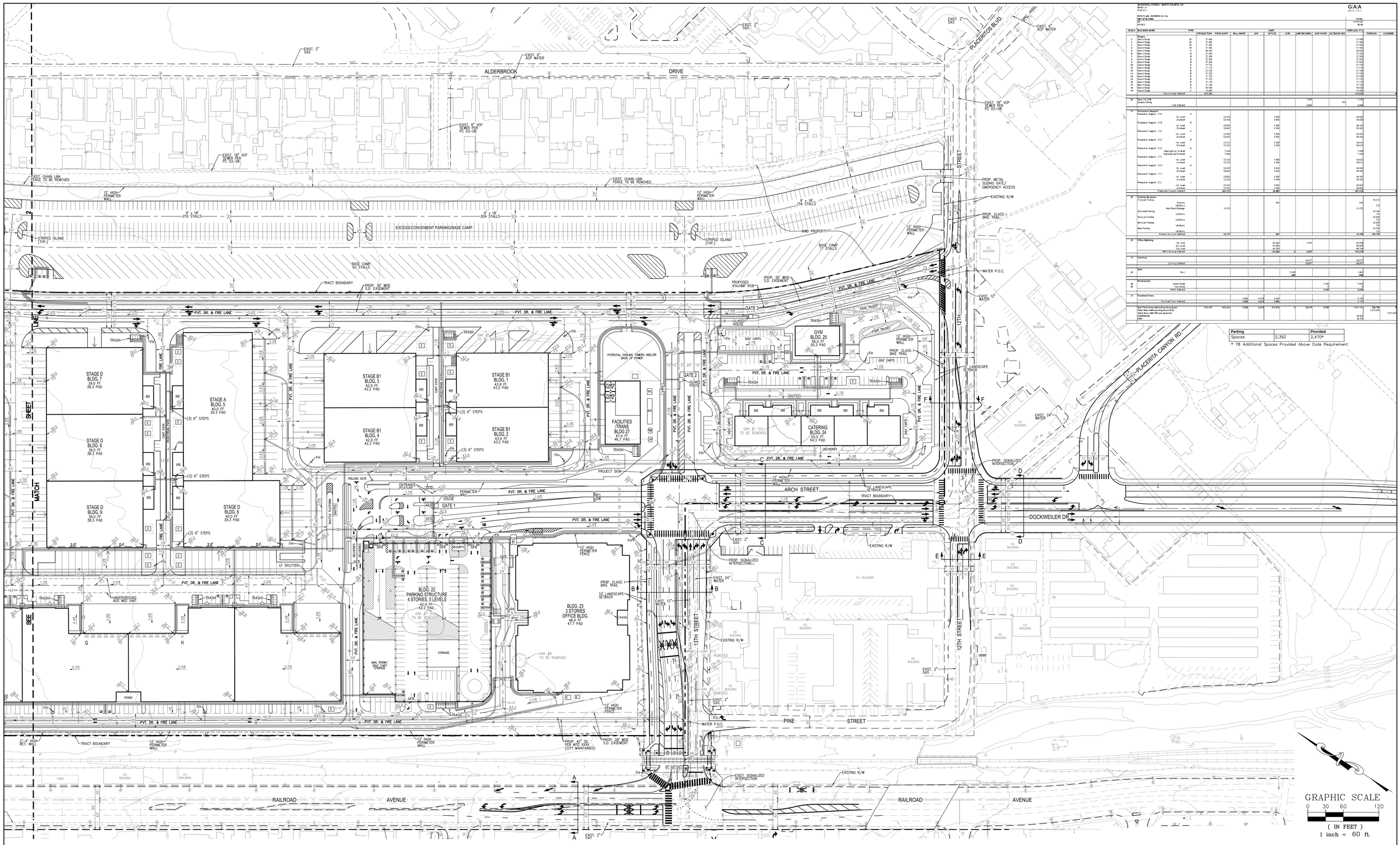

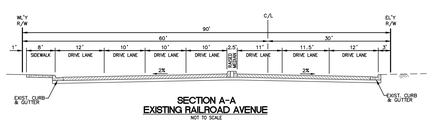

SECTION A-A
EXISTING RAILROAD AVENUE
NOT TO SCALE

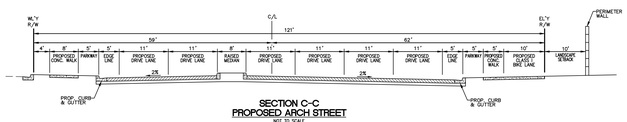

SECTION C-C
PROPOSED ARCH STREET
NOT TO SCALE

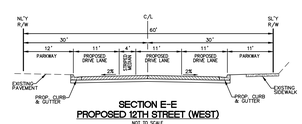

SECTION E-E
PROPOSED 12TH STREET (WEST)
NOT TO SCALE

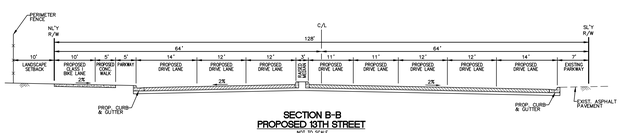

SECTION B-B
PROPOSED 13TH STREET
NOT TO SCALE

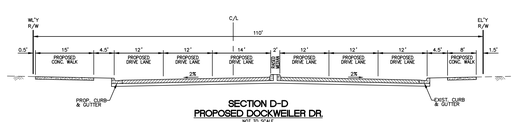

SECTION D-D
PROPOSED DOCKWEILER DR.
NOT TO SCALE

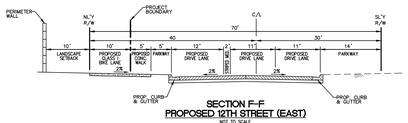

SECTION F-F
PROPOSED 12TH STREET (EAST)
NOT TO SCALE

ALLIANCE LAND PLANNING & ENGINEERING INC.
CIVIL ENGINEERING • LAND PLANNING • HILLSIDE DESIGN • SURVEYING
2248 FARADAY AVE.
CARLSBAD, CA 92008
TEL: (760) 431-9896
FAX: (760) 431-8802
27413 TOURNEY ROAD
SUITE 120
VALENCIA, CA 91355
TEL: (661) 799-2760

PLAN PREPARED FOR:
LA RAILROAD 93, LLC
C/O BLACKHALL STUDIOS
1415 CONSTITUTION ROAD SE
ATLANTA, GA 30316
(949) 955-3555
ATTN: JEFF WEBER

PLANS PREPARED BY:
ALLIANCE LAND PLANNING & ENGINEERING INC.
2248 FARADAY AVE.
CARLSBAD, CA 92008
(760) 431-9896
PLANS PREPARED UNDER THE DIRECTION OF:
CRAIG WHITTEKER R.C.E. 51929 — 9/24/21 DATE

REGISTERED PROFESSIONAL ENGINEER CRAIG W. WHITTEKER NO. 51929 EXP. 6-30-23 CIVIL STATE OF CALIFORNIA

NO.	DATE	REVISIONS	BY	APPR

SHEET 2 OF 3 SHEETS

CITY OF SANTA CLARITA

BLACKHALL STUDIOS - SANTA CLARITA
TENTATIVE TRACT MAP 083513

I:\CAD\2026\TENTATIVE MAP\2026_TENTATIVE_MAP.dwg

BLACKHALL STUDIO - SANTA CLARITA, CA
GAA ARCHITECTS
9/24/21

SITE PLAN - SCHEME 03.11a
SP - SITE AREA
ACRES

	TOTAL
SF	4,314,030
ACRES	99.04

BLDG #	BUILDING NAME	TYPE		PRODUCTION	PROD SUPP	MILL/SHOP	W/H	USES OFFICE	O/R	SUBMITTED SUPPLY	GAS HVAC	OUTDOOR SPA	AREA (SQ. FT.)	PARKING	COVERED
	Stages														
1	Sound Stage	B1		21,465									21,465		
2	Sound Stage	B1		21,465									21,465		
3	Sound Stage	B1		21,465									21,465		
4	Sound Stage	B1		21,465									21,465		
5	Sound Stage	A		44,050									44,050		
6	Sound Stage	D		27,350									27,350		
7	Sound Stage	D		27,350									27,350		
8	Sound Stage	D		27,350									27,350		
9	Sound Stage	D		27,350									27,350		
10	Sound Stage	B		21,725									21,725		
11	Sound Stage	B		21,725									21,725		
12	Sound Stage	B		21,725									21,725		
13	Sound Stage	B		21,725									21,725		
14	Sound Stage	B		21,725									21,725		
15	Sound Stage	B		21,725									21,725		
16	Sound Stage	B		21,725									21,725		
17	Sound Stage	B		21,725									21,725		
18	Sound Stage	A		44,050									44,050		
19	Sound Stage	C		15,985									15,985		
	Sound Stage Subtotal			473,235									473,235		0
20	Back Lot Cafe									1,545			1,545		
	Outdoor Dining									3,340		750	3,340		
	Cafe Subtotal												4,885		
21	Production Support														
	Production Support - 21A	A	1st Level		33,932			4,990					38,922		
			2nd Level		33,932			4,990					38,922		
	Production Support - 21B	B	1st Level		32,662			4,990					37,652		
			2nd Level		32,662			4,990					37,652		
	Production Support - 21C	C	1st Level		32,662			4,990					37,652		
			2nd Level		32,662			4,990					37,652		
	Production Support - 21D	D	1st Level		33,932			4,990					38,922		
			2nd Level		33,932			4,990					38,922		
	Production Support - 21E	E	Ceiling Lighting 1st level		7,948								7,948		
			Ceiling Lighting 2nd level		7,948								7,948		
	Production Support - 21F	F	1st Level		33,932			4,990					38,922		
			2nd Level		33,932			4,990					38,922		
	Production Support - 21G	G	1st Level		32,662			4,990					37,652		
			2nd Level		32,662			4,990					37,652		
	Production Support - 21H	H	1st Level		32,662			4,990					37,652		
			2nd Level		32,662			4,990					37,652		
	Production Support - 21J	J	1st Level		33,932			4,990					38,922		
			2nd Level		33,932			4,990					38,922		
	Production Support Subtotal				563,576			84,990					647,566		0
22	Parking Structure														
	1st Level Parking		Security					605					605	40,515	
			Lift/Stairs											755	
			Wall Room/Storage		10,675			5,545					10,675		
	2nd Level Parking													61,150	
			Lift/Stairs											755	
	3rd Level Parking													61,150	
			Lift/Stairs											755	
	4th Level Parking													63,256	
			Lift/Stairs											755	
	Roof Parking													61,256	
			Lift/Stairs											755	
	Parking Structure Subtotal				10,675			605					10,780	366,760	
23	Office Building														
			1st Level					64,180		2,240			66,420		
			2nd Level					64,180					64,180		
			3rd Level					63,256					63,256		
	Office Building Subtotal							192,616	0	2,240			197,856		
24	Catering									24,977			24,977		
	Catering Subtotal									24,977			24,977		
25	Gym	Gym						5,450					5,450		
								5,450					5,450		
26	Wash/Dwell	Wash/Dwell									3,000		3,000		
26		Hot Shop													
		Wash Subtotal									3,000		3,000		
27	Facilities/Trans			3,550	4,535	1,200							9,285		
				3,550	4,535	1,200							9,285		
		Facilities/Trans Subtotal													
	Bldg Total Area without parking struct.			473,235	553,576	3,550	4,535	231,814	0	26,470	3,000		1,293,182	366,760	0
	Total Area with parking struct.(Gfb)												1,673,942		
	Total Area with PM and covered parking														1,673,942
	FAR(Total)												38.8%		
	FAR												38.0%		

Parking		Provided
Spaces	2,392	2,470*

* 78 Additional Spaces Provided Above Code Requirement

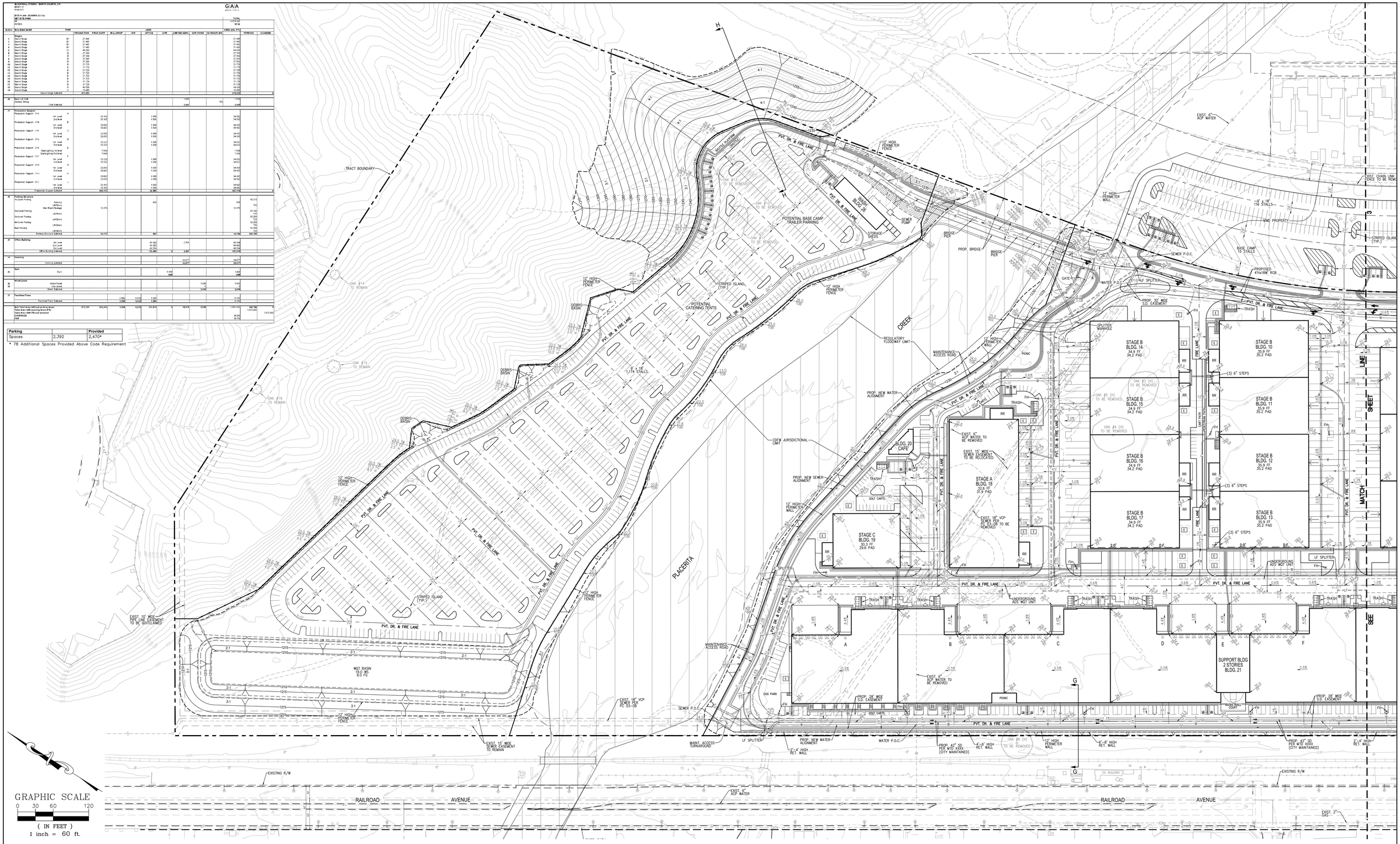

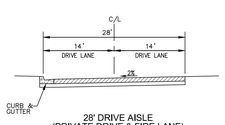

28' DRIVE AISLE
(PRIVATE DRIVE & FIRE LANE)
NOT TO SCALE

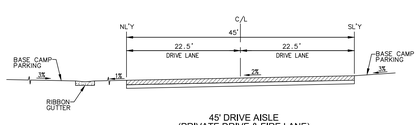

45' DRIVE AISLE
(PRIVATE DRIVE & FIRE LANE)
NOT TO SCALE

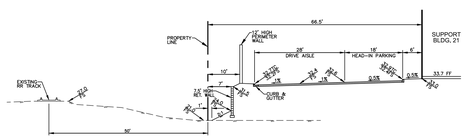

SECTION G-G
WALL SECTION
NOT TO SCALE

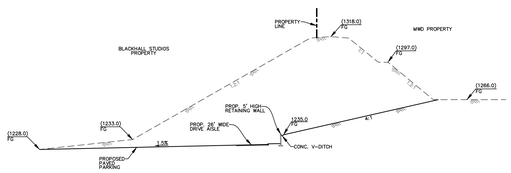

SECTION H-H
KNOLL GRADING
NOT TO SCALE

ALLIANCE
LAND PLANNING & ENGINEERING INC.
2248 FARADAY AVE.
CARLSBAD, CA 92008
TEL: (760) 431-9896
FAX: (760) 431-8802
27413 TOURNEY ROAD
SUITE 120
VALENCIA, CA 91355
TEL: (661) 799-2760
CIVIL ENGINEERING • LAND PLANNING • HILLSIDE DESIGN • SURVEYING

PLAN PREPARED FOR:
LA RAILROAD 93, LLC
C/O BLACKHALL STUDIOS
1415 CONSTITUTION ROAD SE
ATLANTA, GA 30316
(949) 955-3555
ATTN: JEFF WEBER

PLANS PREPARED BY:
ALLIANCE LAND PLANNING & ENGINEERING INC.
2248 FARADAY AVE.
CARLSBAD, CA 92008
(760) 431-9896
PLANS PREPARED UNDER THE DIRECTION OF:
CRAIG W. WHITTEKER — 9/24/21
CRAIG W. WHITTEKER R.C.E. 51929 — DATE

REGISTERED PROFESSIONAL ENGINEER — CRAIG W. WHITTEKER — NO. 51929 — EXP. 6-30-22 — CIVIL — STATE OF CALIFORNIA

NO.	DATE	REVISIONS	BY	APPR

SHEET 3 OF 3 — CITY OF SANTA CLARITA

BLACKHALL STUDIOS - SANTA CLARITA
TENTATIVE TRACT MAP 083513

I:\CAD\2026\TENTATIVE MAP\2026_TENTATIVE_MAP.dwg

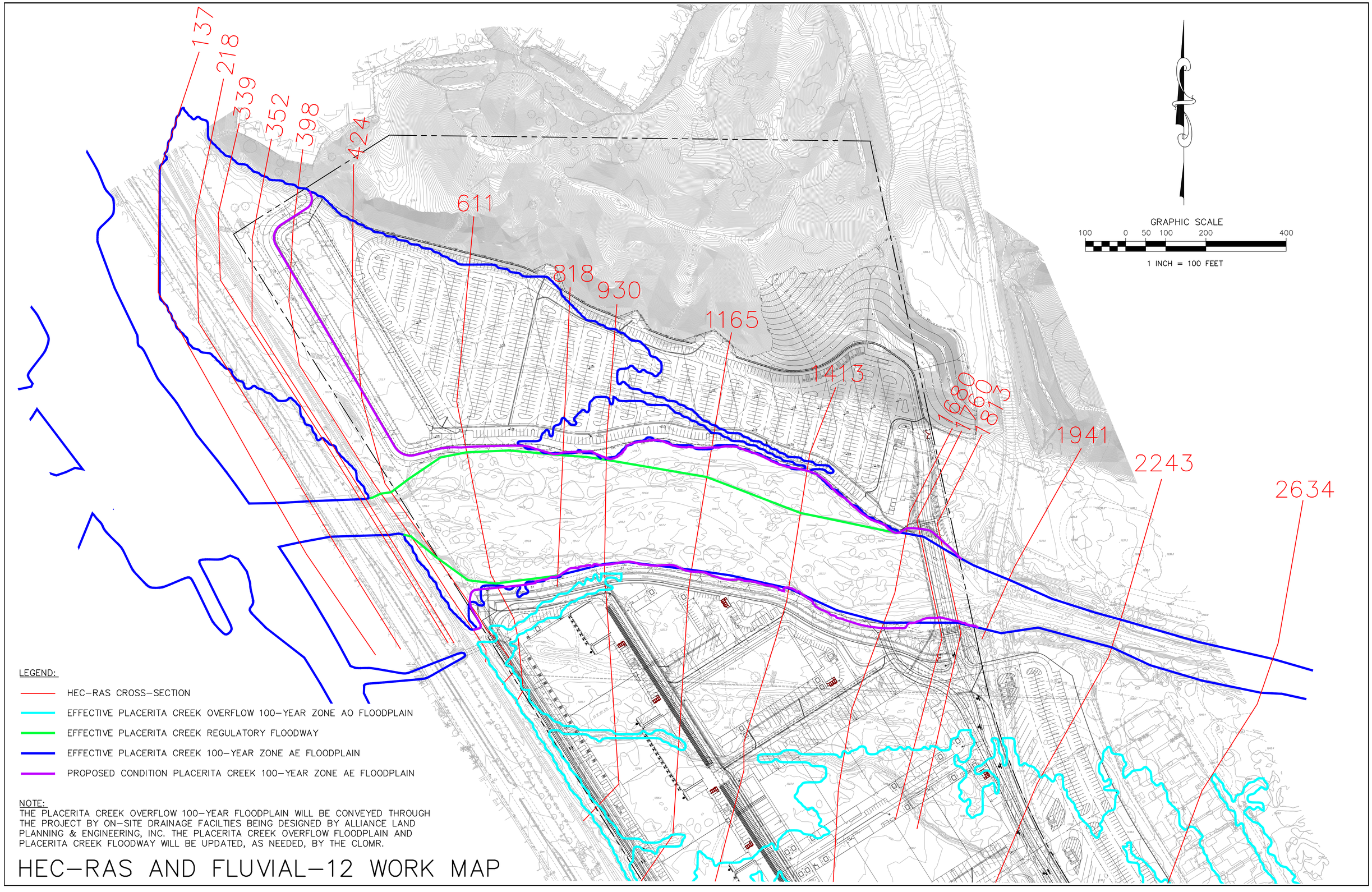

HEC-RAS AND FLUVIAL-12 WORK MAP