APPENDIX B

EXISTING TRAFFIC COUNT DATA

Counts Unlimited, Inc.
PO Box 1178
Corona, CA 92878
(951)268-6268

City of San Jacinto
N/S: State Street
E/W: Quandt Ranch Road
Weather: Clear

File Name : 01_SJC_State_QR AM
Site Code : 05722704
Start Date : 8/16/2022
Page No : 1

Groups Printed- Total Volume

	State Street Southbound			Quandt Ranch Road Westbound			State Street Northbound			
Start Time	Left	Thru	App. Total	Left	Right	App. Total	Thru	Right	App. Total	Int. Total
07:00 AM	2	61	63	24	4	28	257	12	269	360
07:15 AM	1	57	58	29	6	35	232	13	245	338
07:30 AM	2	60	62	8	4	12	203	15	218	292
07:45 AM	0	69	69	8	5	13	192	3	195	277
Total	5	247	252	69	19	88	884	43	927	1267
08:00 AM	1	44	45	5	4	9	167	8	175	229
08:15 AM	0	66	66	11	1	12	165	2	167	245
08:30 AM	0	59	59	4	5	9	197	7	204	272
08:45 AM	1	64	65	8	1	9	157	6	163	237
Total	2	233	235	28	11	39	686	23	709	983
Grand Total	7	480	487	97	30	127	1570	66	1636	2250
Apprch %	1.4	98.6		76.4	23.6		96	4		
Total %	0.3	21.3	21.6	4.3	1.3	5.6	69.8	2.9	72.7	

	State Street Southbound			Quandt Ranch Road Westbound			State Street Northbound			
Start Time	Left	Thru	App. Total	Left	Right	App. Total	Thru	Right	App. Total	Int. Total
Peak Hour Analysis From 07:00 AM to 08:45 AM - Peak 1 of 1										
Peak Hour for Entire Intersection Begins at 07:00 AM										
07:00 AM	**2**	61	63	24	4	28	**257**	12	**269**	**360**
07:15 AM	1	57	58	**29**	**6**	**35**	232	13	245	338
07:30 AM	2	60	62	8	4	12	203	**15**	218	292
07:45 AM	0	**69**	**69**	8	5	13	192	3	195	277
Total Volume	5	247	252	69	19	88	884	43	927	1267
% App. Total	2	98		78.4	21.6		95.4	4.6		
PHF	.625	.895	.913	.595	.792	.629	.860	.717	.862	.880

Counts Unlimited, Inc.
PO Box 1178
Corona, CA 92878
(951)268-6268

City of San Jacinto
N/S: State Street
E/W: Quandt Ranch Road
Weather: Clear

File Name : 01_SJC_State_QR AM
Site Code : 05722704
Start Date : 8/16/2022
Page No : 2

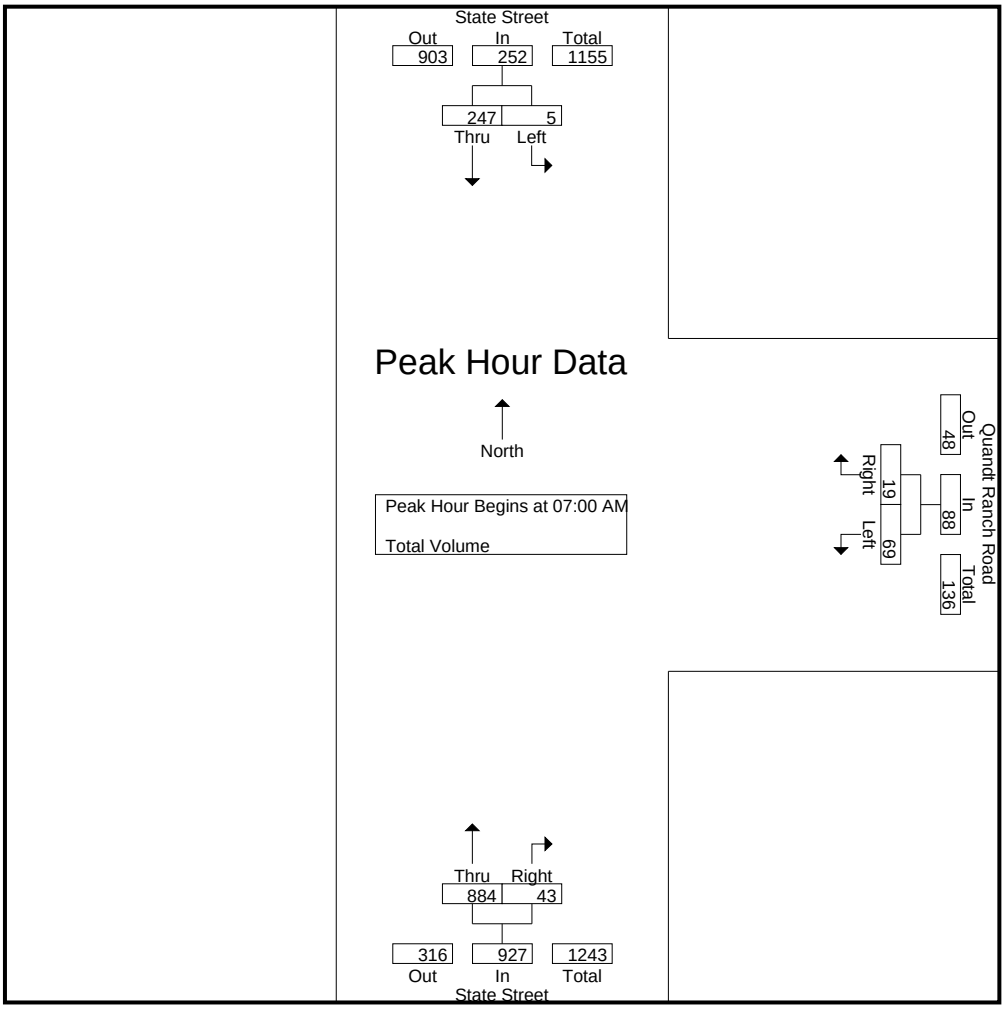

Peak Hour Analysis From 07:00 AM to 08:45 AM - Peak 1 of 1
Peak Hour for Each Approach Begins at:

	07:00 AM			07:00 AM			07:00 AM		
+0 mins.	**2**	61	63	24	4	28	**257**	12	**269**
+15 mins.	1	57	58	**29**	**6**	**35**	232	13	245
+30 mins.	2	60	62	8	4	12	203	**15**	218
+45 mins.	0	**69**	**69**	8	5	13	192	3	195
Total Volume	5	247	252	69	19	88	884	43	927
% App. Total	2	98		78.4	21.6		95.4	4.6	
PHF	.625	.895	.913	.595	.792	.629	.860	.717	.862

Counts Unlimited, Inc.
PO Box 1178
Corona, CA 92878
(951)268-6268

City of San Jacinto
N/S: State Street
E/W: Quandt Ranch Road
Weather: Clear

File Name : 01_SJC_State_QR PM
Site Code : 05722704
Start Date : 8/16/2022
Page No : 1

Groups Printed- Total Volume

	State Street Southbound			Quandt Ranch Road Westbound			State Street Northbound			
Start Time	Left	Thru	App. Total	Left	Right	App. Total	Thru	Right	App. Total	Int. Total
04:00 PM	5	148	153	6	0	6	111	9	120	279
04:15 PM	2	146	148	8	1	9	112	13	125	282
04:30 PM	6	132	138	11	2	13	120	10	130	281
04:45 PM	5	132	137	6	0	6	123	9	132	275
Total	18	558	576	31	3	34	466	41	507	1117
05:00 PM	4	154	158	8	1	9	125	11	136	303
05:15 PM	4	207	211	6	0	6	139	9	148	365
05:30 PM	7	136	143	10	3	13	123	12	135	291
05:45 PM	6	150	156	10	1	11	95	18	113	280
Total	21	647	668	34	5	39	482	50	532	1239
Grand Total	39	1205	1244	65	8	73	948	91	1039	2356
Apprch %	3.1	96.9		89	11		91.2	8.8		
Total %	1.7	51.1	52.8	2.8	0.3	3.1	40.2	3.9	44.1	

	State Street Southbound			Quandt Ranch Road Westbound			State Street Northbound			
Start Time	Left	Thru	App. Total	Left	Right	App. Total	Thru	Right	App. Total	Int. Total
Peak Hour Analysis From 04:00 PM to 05:45 PM - Peak 1 of 1										
Peak Hour for Entire Intersection Begins at 05:00 PM										
05:00 PM	4	154	158	8	1	9	125	11	136	303
05:15 PM	4	**207**	**211**	6	0	6	**139**	9	**148**	**365**
05:30 PM	**7**	136	143	**10**	**3**	**13**	123	12	135	291
05:45 PM	6	150	156	10	1	11	95	**18**	113	280
Total Volume	21	647	668	34	5	39	482	50	532	1239
% App. Total	3.1	96.9		87.2	12.8		90.6	9.4		
PHF	.750	.781	.791	.850	.417	.750	.867	.694	.899	.849

Counts Unlimited, Inc.
PO Box 1178
Corona, CA 92878
(951)268-6268

City of San Jacinto
N/S: State Street
E/W: Quandt Ranch Road
Weather: Clear

File Name : 01_SJC_State_QR PM
Site Code : 05722704
Start Date : 8/16/2022
Page No : 2

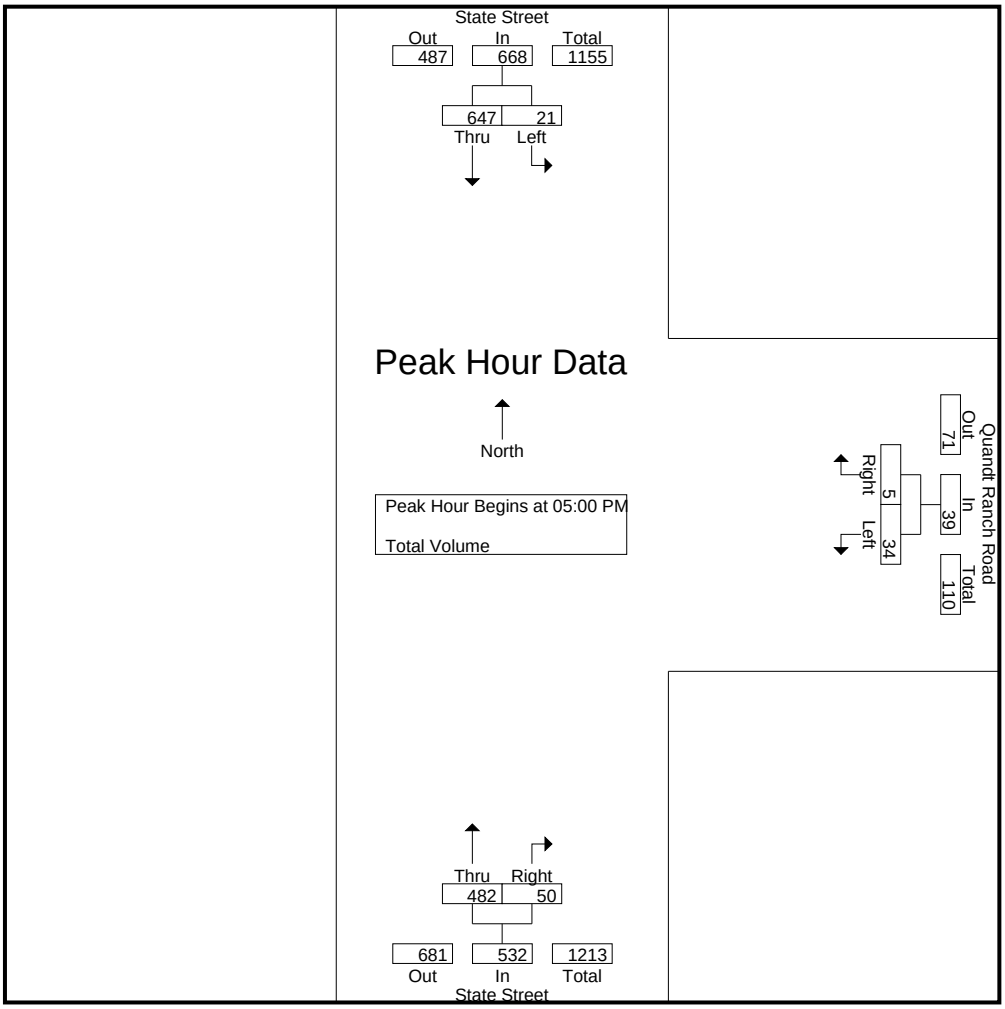

Peak Hour Analysis From 04:00 PM to 05:45 PM - Peak 1 of 1
Peak Hour for Each Approach Begins at:

	05:00 PM			05:00 PM			04:45 PM		
+0 mins.	4	154	158	8	1	9	123	9	132
+15 mins.	4	**207**	**211**	6	0	6	125	11	136
+30 mins.	**7**	136	143	**10**	**3**	**13**	**139**	9	**148**
+45 mins.	6	150	156	10	1	11	123	**12**	135
Total Volume	21	647	668	34	5	39	510	41	551
% App. Total	3.1	96.9		87.2	12.8		92.6	7.4	
PHF	.750	.781	.791	.850	.417	.750	.917	.854	.931

Counts Unlimited, Inc.
PO Box 1178
Corona, CA 92878
(951)268-6268

City of San Jacinto
N/S: State Street
E/W: Community College Drive
Weather: Clear

File Name : 02_SJC_State_CC AM
Site Code : 05722704
Start Date : 8/16/2022
Page No : 1

Groups Printed- Total Volume

	State Street Southbound				Community College Drive Westbound				State Street Northbound				Community College Drive Eastbound				
Start Time	Left	Thru	Right	App. Total	Left	Thru	Right	App. Total	Left	Thru	Right	App. Total	Left	Thru	Right	App. Total	Int. Total
07:00 AM	9	63	0	72	1	0	14	15	1	276	6	283	0	1	4	5	375
07:15 AM	20	108	1	129	1	1	31	33	3	280	3	286	0	0	3	3	451
07:30 AM	23	107	0	130	4	1	9	14	1	236	21	258	0	0	3	3	405
07:45 AM	13	85	1	99	11	0	12	23	3	217	33	253	2	0	1	3	378
Total	65	363	2	430	17	2	66	85	8	1009	63	1080	2	1	11	14	1609
08:00 AM	8	59	1	68	3	0	8	11	2	182	19	203	1	0	6	7	289
08:15 AM	13	81	0	94	3	0	8	11	5	183	12	200	1	0	2	3	308
08:30 AM	8	61	0	69	6	0	10	16	0	233	25	258	2	0	9	11	354
08:45 AM	4	85	0	89	9	0	9	18	2	184	29	215	0	1	5	6	328
Total	33	286	1	320	21	0	35	56	9	782	85	876	4	1	22	27	1279
Grand Total	98	649	3	750	38	2	101	141	17	1791	148	1956	6	2	33	41	2888
Apprch %	13.1	86.5	0.4		27	1.4	71.6		0.9	91.6	7.6		14.6	4.9	80.5		
Total %	3.4	22.5	0.1	26	1.3	0.1	3.5	4.9	0.6	62	5.1	67.7	0.2	0.1	1.1	1.4	

	State Street Southbound				Community College Drive Westbound				State Street Northbound				Community College Drive Eastbound				
Start Time	Left	Thru	Right	App. Total	Left	Thru	Right	App. Total	Left	Thru	Right	App. Total	Left	Thru	Right	App. Total	Int. Total
Peak Hour Analysis From 07:00 AM to 08:45 AM - Peak 1 of 1																	
Peak Hour for Entire Intersection Begins at 07:00 AM																	
07:00 AM	9	63	0	72	1	0	14	15	1	276	6	283	0	**1**	**4**	**5**	375
07:15 AM	20	**108**	**1**	129	1	**1**	**31**	**33**	**3**	**280**	3	**286**	0	0	3	3	**451**
07:30 AM	**23**	107	0	**130**	4	1	9	14	1	236	21	258	0	0	3	3	405
07:45 AM	13	85	1	99	**11**	0	12	23	3	217	**33**	253	**2**	0	1	3	378
Total Volume	65	363	2	430	17	2	66	85	8	1009	63	1080	2	1	11	14	1609
% App. Total	15.1	84.4	0.5		20	2.4	77.6		0.7	93.4	5.8		14.3	7.1	78.6		
PHF	.707	.840	.500	.827	.386	.500	.532	.644	.667	.901	.477	.944	.250	.250	.688	.700	.892

Counts Unlimited, Inc.
PO Box 1178
Corona, CA 92878
(951)268-6268

City of San Jacinto
N/S: State Street
E/W: Community College Drive
Weather: Clear

File Name : 02_SJC_State_CC AM
Site Code : 05722704
Start Date : 8/16/2022
Page No : 2

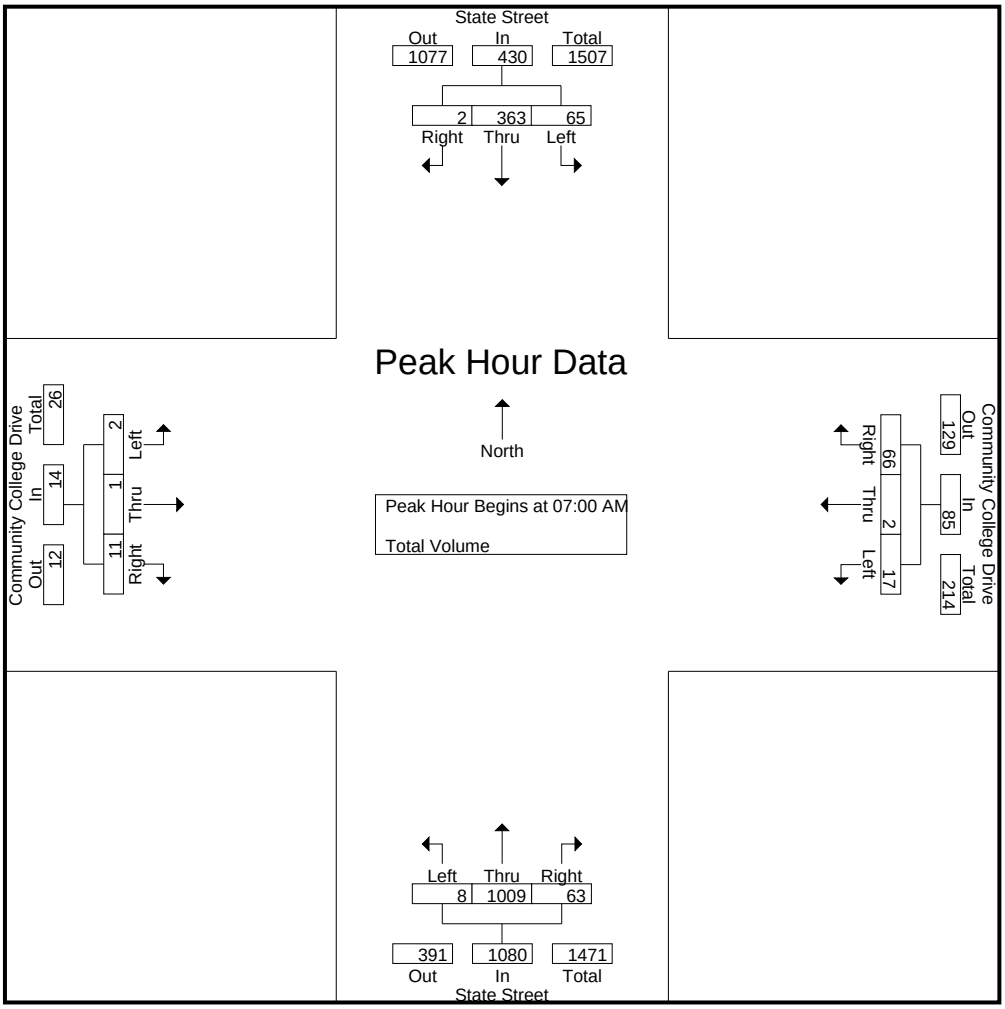

Peak Hour Analysis From 07:00 AM to 08:45 AM - Peak 1 of 1
Peak Hour for Each Approach Begins at:

	07:00 AM				07:00 AM				07:00 AM				08:00 AM			
+0 mins.	9	63	0	72	1	0	14	15	1	276	6	283	1	0	6	7
+15 mins.	20	**108**	**1**	129	1	**1**	**31**	**33**	**3**	**280**	3	**286**	1	0	2	3
+30 mins.	**23**	107	0	**130**	4	1	9	14	1	236	21	258	**2**	0	**9**	**11**
+45 mins.	13	85	1	99	**11**	0	12	23	3	217	**33**	253	0	**1**	5	6
Total Volume	65	363	2	430	17	2	66	85	8	1009	63	1080	4	1	22	27
% App. Total	15.1	84.4	0.5		20	2.4	77.6		0.7	93.4	5.8		14.8	3.7	81.5	
PHF	.707	.840	.500	.827	.386	.500	.532	.644	.667	.901	.477	.944	.500	.250	.611	.614

Counts Unlimited, Inc.
PO Box 1178
Corona, CA 92878
(951)268-6268

City of San Jacinto
N/S: State Street
E/W: Community College Drive
Weather: Clear

File Name : 02_SJC_State_CC PM
Site Code : 05722704
Start Date : 8/16/2022
Page No : 1

Groups Printed- Total Volume

	State Street Southbound				Community College Drive Westbound				State Street Northbound				Community College Drive Eastbound				
Start Time	Left	Thru	Right	App. Total	Left	Thru	Right	App. Total	Left	Thru	Right	App. Total	Left	Thru	Right	App. Total	Int. Total
04:00 PM	19	148	1	168	5	0	5	10	5	125	8	138	1	0	4	5	321
04:15 PM	17	137	0	154	4	0	5	9	9	149	4	162	0	0	6	6	331
04:30 PM	19	145	1	165	12	0	6	18	7	140	8	155	0	0	3	3	341
04:45 PM	8	140	0	148	10	0	3	13	7	144	10	161	0	0	2	2	324
Total	63	570	2	635	31	0	19	50	28	558	30	616	1	0	15	16	1317
05:00 PM	16	158	1	175	4	0	6	10	5	138	6	149	0	0	4	4	338
05:15 PM	29	204	0	233	6	0	6	12	10	146	7	163	1	1	4	6	414
05:30 PM	21	145	1	167	1	1	9	11	6	137	14	157	0	0	3	3	338
05:45 PM	12	151	0	163	6	0	3	9	11	121	14	146	0	1	9	10	328
Total	78	658	2	738	17	1	24	42	32	542	41	615	1	2	20	23	1418
Grand Total	141	1228	4	1373	48	1	43	92	60	1100	71	1231	2	2	35	39	2735
Apprch %	10.3	89.4	0.3		52.2	1.1	46.7		4.9	89.4	5.8		5.1	5.1	89.7		
Total %	5.2	44.9	0.1	50.2	1.8	0	1.6	3.4	2.2	40.2	2.6	45	0.1	0.1	1.3	1.4	

	State Street Southbound				Community College Drive Westbound				State Street Northbound				Community College Drive Eastbound				
Start Time	Left	Thru	Right	App. Total	Left	Thru	Right	App. Total	Left	Thru	Right	App. Total	Left	Thru	Right	App. Total	Int. Total
Peak Hour Analysis From 04:00 PM to 05:45 PM - Peak 1 of 1																	
Peak Hour for Entire Intersection Begins at 05:00 PM																	
05:00 PM	16	158	**1**	175	4	0	6	10	5	138	6	149	0	0	4	4	338
05:15 PM	**29**	**204**	0	**233**	**6**	0	6	**12**	10	**146**	7	**163**	**1**	**1**	4	6	**414**
05:30 PM	21	145	1	167	1	**1**	**9**	11	6	137	**14**	157	0	0	3	3	338
05:45 PM	12	151	0	163	6	0	3	9	**11**	121	14	146	0	1	**9**	**10**	328
Total Volume	78	658	2	738	17	1	24	42	32	542	41	615	1	2	20	23	1418
% App. Total	10.6	89.2	0.3		40.5	2.4	57.1		5.2	88.1	6.7		4.3	8.7	87		
PHF	.672	.806	.500	.792	.708	.250	.667	.875	.727	.928	.732	.943	.250	.500	.556	.575	.856

Counts Unlimited, Inc.
PO Box 1178
Corona, CA 92878
(951)268-6268

City of San Jacinto
N/S: State Street
E/W: Community College Drive
Weather: Clear

File Name : 02_SJC_State_CC PM
Site Code : 05722704
Start Date : 8/16/2022
Page No : 2

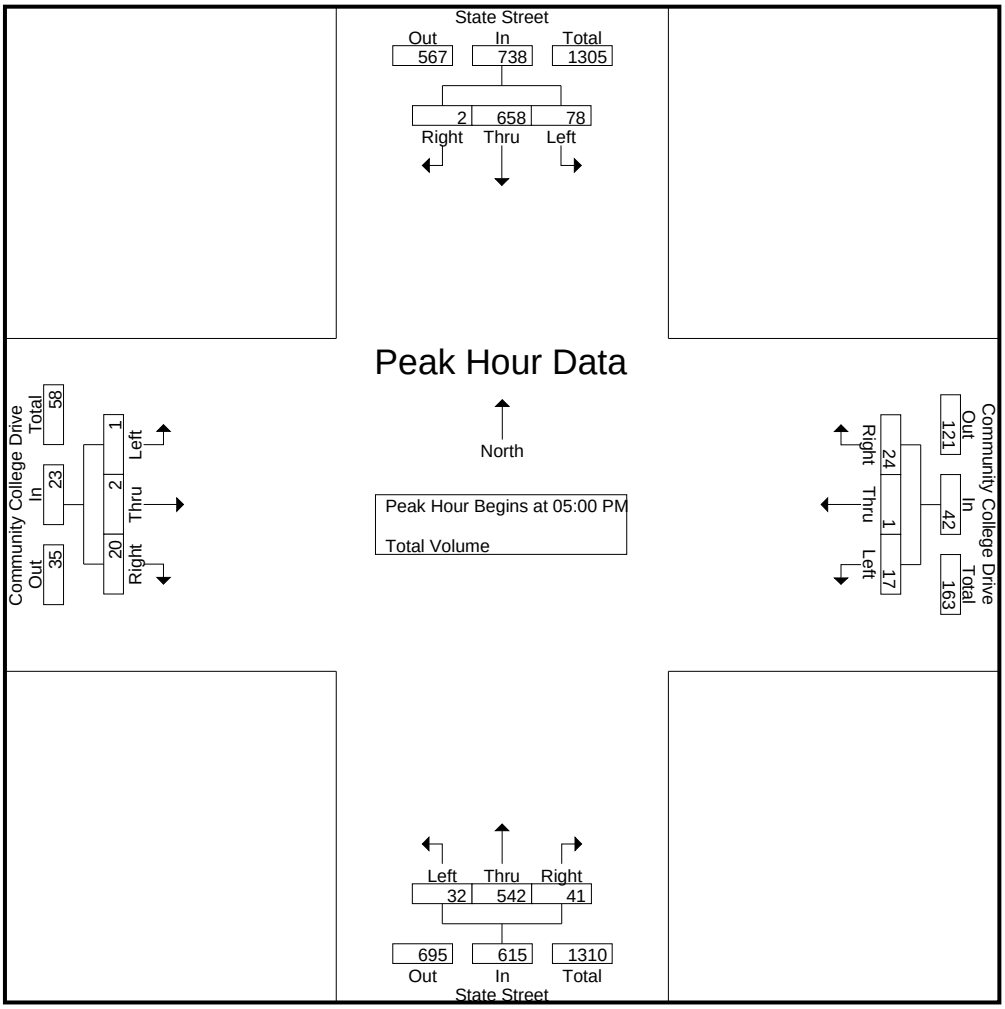

Peak Hour Analysis From 04:00 PM to 05:45 PM - Peak 1 of 1
Peak Hour for Each Approach Begins at:

	05:00 PM				04:30 PM				04:45 PM				05:00 PM			
+0 mins.	16	158	**1**	175	**12**	0	**6**	**18**	7	144	10	161	0	0	4	4
+15 mins.	**29**	**204**	0	**233**	10	0	3	13	5	138	6	149	**1**	**1**	4	6
+30 mins.	21	145	1	167	4	0	6	10	**10**	**146**	7	**163**	0	0	3	3
+45 mins.	12	151	0	163	6	0	6	12	6	137	**14**	157	0	1	**9**	**10**
Total Volume	78	658	2	738	32	0	21	53	28	565	37	630	1	2	20	23
% App. Total	10.6	89.2	0.3		60.4	0	39.6		4.4	89.7	5.9		4.3	8.7	87	
PHF	.672	.806	.500	.792	.667	.000	.875	.736	.700	.967	.661	.966	.250	.500	.556	.575

Counts Unlimited, Inc.
PO Box 1178
Corona, CA 92878
(951)268-6268

City of San Jacinto
N/S: State Street
E/W: Ramona Expressway
Weather: Clear

File Name : 03_SJC_State_Ram AM
Site Code : 05722704
Start Date : 8/16/2022
Page No : 1

Groups Printed- Total Volume

	State Street Southbound				Ramona Expressway Westbound				State Street Northbound				Ramona Expressway Eastbound				
Start Time	Left	Thru	Right	App. Total	Left	Thru	Right	App. Total	Left	Thru	Right	App. Total	Left	Thru	Right	App. Total	Int. Total
07:00 AM	15	38	11	64	20	135	85	240	75	178	4	257	24	110	70	204	765
07:15 AM	28	64	29	121	15	146	99	260	76	186	13	275	21	85	116	222	878
07:30 AM	29	70	26	125	32	111	86	229	51	155	15	221	35	77	106	218	793
07:45 AM	21	61	15	97	29	85	79	193	50	158	15	223	52	85	110	247	760
Total	93	233	81	407	96	477	349	922	252	677	47	976	132	357	402	891	3196
08:00 AM	15	67	11	93	38	100	73	211	45	151	19	215	29	104	116	249	768
08:15 AM	23	63	14	100	39	103	73	215	38	93	12	143	24	92	112	228	686
08:30 AM	18	73	17	108	13	94	71	178	58	185	19	262	51	76	64	191	739
08:45 AM	20	64	16	100	19	80	71	170	36	119	15	170	43	103	91	237	677
Total	76	267	58	401	109	377	288	774	177	548	65	790	147	375	383	905	2870
Grand Total	169	500	139	808	205	854	637	1696	429	1225	112	1766	279	732	785	1796	6066
Apprch %	20.9	61.9	17.2		12.1	50.4	37.6		24.3	69.4	6.3		15.5	40.8	43.7		
Total %	2.8	8.2	2.3	13.3	3.4	14.1	10.5	28	7.1	20.2	1.8	29.1	4.6	12.1	12.9	29.6	

	State Street Southbound				Ramona Expressway Westbound				State Street Northbound				Ramona Expressway Eastbound				
Start Time	Left	Thru	Right	App. Total	Left	Thru	Right	App. Total	Left	Thru	Right	App. Total	Left	Thru	Right	App. Total	Int. Total
Peak Hour Analysis From 07:00 AM to 08:45 AM - Peak 1 of 1																	
Peak Hour for Entire Intersection Begins at 07:15 AM																	
07:15 AM	28	64	**29**	121	15	**146**	**99**	**260**	**76**	**186**	13	**275**	21	85	**116**	222	**878**
07:30 AM	**29**	**70**	26	**125**	32	111	86	229	51	155	15	221	35	77	106	218	793
07:45 AM	21	61	15	97	29	85	79	193	50	158	15	223	**52**	85	110	247	760
08:00 AM	15	67	11	93	**38**	100	73	211	45	151	**19**	215	29	**104**	116	**249**	768
Total Volume	93	262	81	436	114	442	337	893	222	650	62	934	137	351	448	936	3199
% App. Total	21.3	60.1	18.6		12.8	49.5	37.7		23.8	69.6	6.6		14.6	37.5	47.9		
PHF	.802	.936	.698	.872	.750	.757	.851	.859	.730	.874	.816	.849	.659	.844	.966	.940	.911

Counts Unlimited, Inc.
PO Box 1178
Corona, CA 92878
(951)268-6268

City of San Jacinto
N/S: State Street
E/W: Ramona Expressway
Weather: Clear

File Name : 03_SJC_State_Ram AM
Site Code : 05722704
Start Date : 8/16/2022
Page No : 2

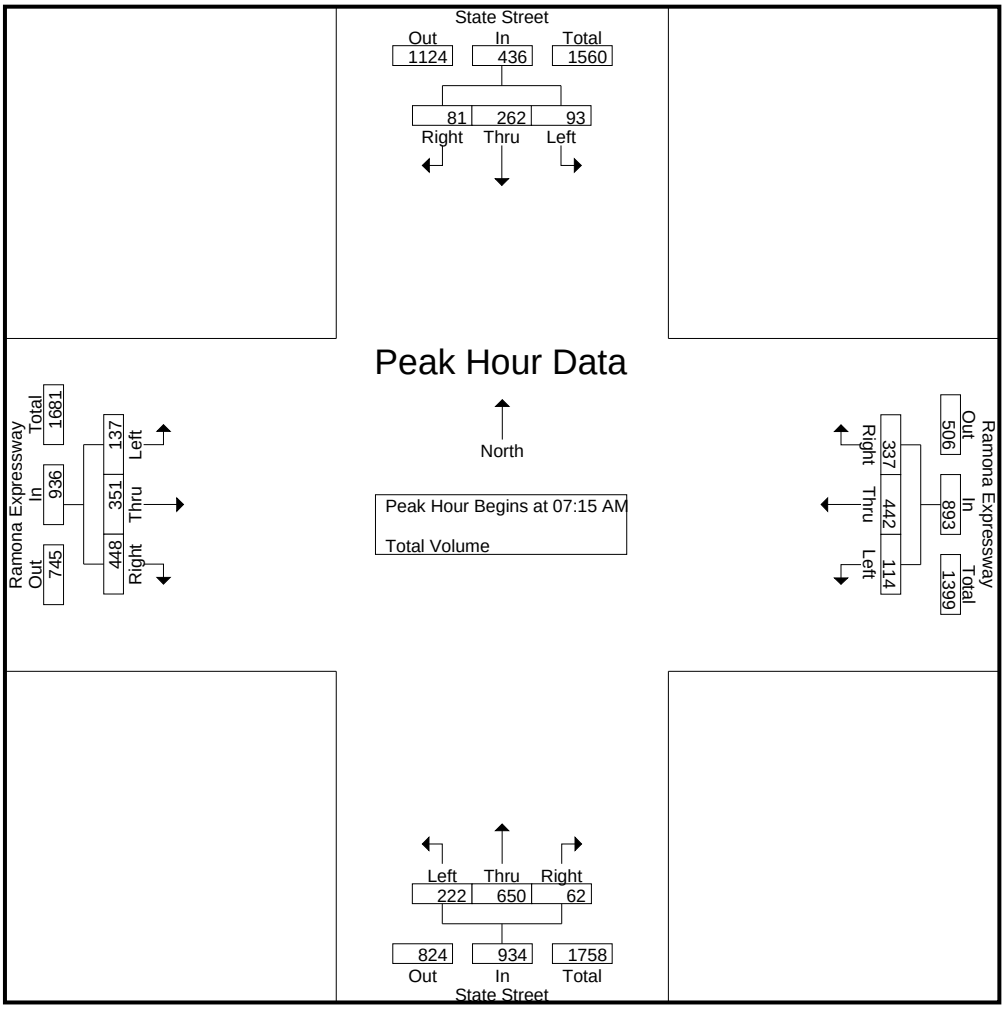

Peak Hour Analysis From 07:00 AM to 08:45 AM - Peak 1 of 1
Peak Hour for Each Approach Begins at:

	07:15 AM				07:00 AM				07:00 AM				07:30 AM			
+0 mins.	28	64	**29**	121	20	135	85	240	75	178	4	257	35	77	106	218
+15 mins.	**29**	**70**	26	**125**	15	**146**	**99**	**260**	**76**	**186**	13	**275**	**52**	85	110	247
+30 mins.	21	61	15	97	**32**	111	86	229	51	155	**15**	221	29	**104**	**116**	**249**
+45 mins.	15	67	11	93	29	85	79	193	50	158	15	223	24	92	112	228
Total Volume	93	262	81	436	96	477	349	922	252	677	47	976	140	358	444	942
% App. Total	21.3	60.1	18.6		10.4	51.7	37.9		25.8	69.4	4.8		14.9	38	47.1	
PHF	.802	.936	.698	.872	.750	.817	.881	.887	.829	.910	.783	.887	.673	.861	.957	.946

Counts Unlimited, Inc.
PO Box 1178
Corona, CA 92878
(951)268-6268

City of San Jacinto
N/S: State Street
E/W: Ramona Expressway
Weather: Clear

File Name : 03_SJC_State_Ram PM
Site Code : 05722704
Start Date : 8/16/2022
Page No : 1

Groups Printed- Total Volume

	State Street Southbound				Ramona Expressway Westbound				State Street Northbound				Ramona Expressway Eastbound				
Start Time	Left	Thru	Right	App. Total	Left	Thru	Right	App. Total	Left	Thru	Right	App. Total	Left	Thru	Right	App. Total	Int. Total
04:00 PM	67	116	20	203	27	106	37	170	94	138	25	257	31	172	113	316	946
04:15 PM	52	99	20	171	24	94	27	145	60	121	14	195	45	178	112	335	846
04:30 PM	40	115	20	175	29	100	39	168	75	128	24	227	32	170	107	309	879
04:45 PM	57	99	21	177	27	92	42	161	86	97	15	198	37	160	102	299	835
Total	216	429	81	726	107	392	145	644	315	484	78	877	145	680	434	1259	3506
05:00 PM	41	100	24	165	20	72	31	123	91	120	30	241	28	158	87	273	802
05:15 PM	61	138	37	236	32	105	41	178	86	165	20	271	29	155	90	274	959
05:30 PM	63	104	11	178	22	95	33	150	104	111	25	240	32	189	112	333	901
05:45 PM	53	105	19	177	23	79	33	135	67	100	14	181	28	146	87	261	754
Total	218	447	91	756	97	351	138	586	348	496	89	933	117	648	376	1141	3416
Grand Total	434	876	172	1482	204	743	283	1230	663	980	167	1810	262	1328	810	2400	6922
Apprch %	29.3	59.1	11.6		16.6	60.4	23		36.6	54.1	9.2		10.9	55.3	33.8		
Total %	6.3	12.7	2.5	21.4	2.9	10.7	4.1	17.8	9.6	14.2	2.4	26.1	3.8	19.2	11.7	34.7	

	State Street Southbound				Ramona Expressway Westbound				State Street Northbound				Ramona Expressway Eastbound				
Start Time	Left	Thru	Right	App. Total	Left	Thru	Right	App. Total	Left	Thru	Right	App. Total	Left	Thru	Right	App. Total	Int. Total
Peak Hour Analysis From 04:00 PM to 05:45 PM - Peak 1 of 1																	
Peak Hour for Entire Intersection Begins at 04:00 PM																	
04:00 PM	**67**	**116**	20	**203**	27	**106**	37	**170**	**94**	**138**	**25**	**257**	31	172	**113**	316	**946**
04:15 PM	52	99	20	171	24	94	27	145	60	121	14	195	**45**	**178**	112	**335**	846
04:30 PM	40	115	20	175	**29**	100	39	168	75	128	24	227	32	170	107	309	879
04:45 PM	57	99	**21**	177	27	92	**42**	161	86	97	15	198	37	160	102	299	835
Total Volume	216	429	81	726	107	392	145	644	315	484	78	877	145	680	434	1259	3506
% App. Total	29.8	59.1	11.2		16.6	60.9	22.5		35.9	55.2	8.9		11.5	54	34.5		
PHF	.806	.925	.964	.894	.922	.925	.863	.947	.838	.877	.780	.853	.806	.955	.960	.940	.927

Counts Unlimited, Inc.
PO Box 1178
Corona, CA 92878
(951)268-6268

City of San Jacinto
N/S: State Street
E/W: Ramona Expressway
Weather: Clear

File Name : 03_SJC_State_Ram PM
Site Code : 05722704
Start Date : 8/16/2022
Page No : 2

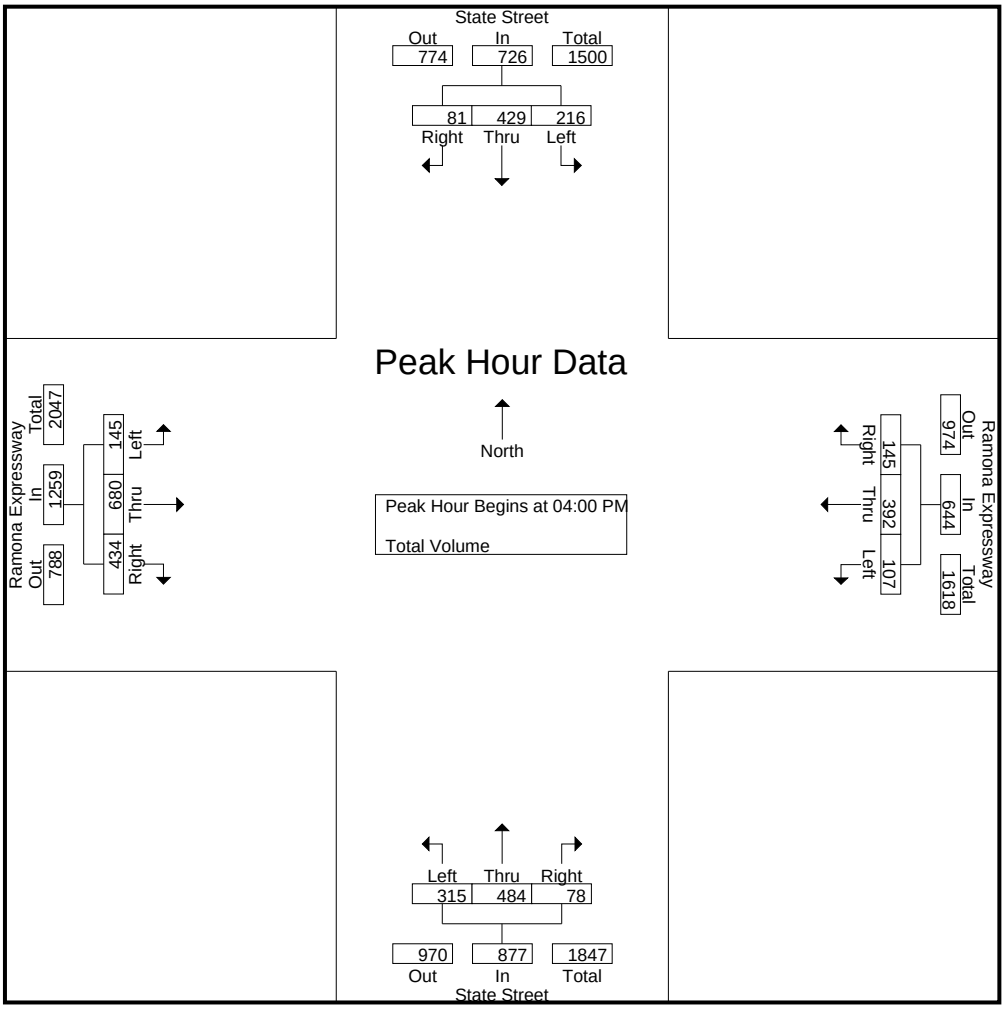

Peak Hour Analysis From 04:00 PM to 05:45 PM - Peak 1 of 1
Peak Hour for Each Approach Begins at:

	04:45 PM				04:00 PM				04:45 PM				04:00 PM			
+0 mins.	57	99	21	177	27	**106**	37	**170**	86	97	15	198	31	172	**113**	316
+15 mins.	41	100	24	165	24	94	27	145	91	120	**30**	241	**45**	**178**	112	**335**
+30 mins.	61	**138**	**37**	**236**	**29**	100	39	168	86	**165**	20	**271**	32	170	107	309
+45 mins.	**63**	104	11	178	27	92	**42**	161	**104**	111	25	240	37	160	102	299
Total Volume	222	441	93	756	107	392	145	644	367	493	90	950	145	680	434	1259
% App. Total	29.4	58.3	12.3		16.6	60.9	22.5		38.6	51.9	9.5		11.5	54	34.5	
PHF	.881	.799	.628	.801	.922	.925	.863	.947	.882	.747	.750	.876	.806	.955	.960	.940

Counts Unlimited, Inc.
PO Box 1178
Corona, CA 92878
(951)268-6268

City of San Jacinto
N/S: State Street
E/W: Idyllwild Drive
Weather: Clear

File Name : 04_SJC_State_Idy AM
Site Code : 05722704
Start Date : 8/16/2022
Page No : 1

Groups Printed- Total Volume

	State Street Southbound				Idyllwild Drive Westbound				State Street Northbound				Idyllwild Drive Eastbound				
Start Time	Left	Thru	Right	App. Total	Left	Thru	Right	App. Total	Left	Thru	Right	App. Total	Left	Thru	Right	App. Total	Int. Total
07:00 AM	7	113	14	134	11	6	28	45	4	232	9	245	12	12	2	26	450
07:15 AM	22	154	9	185	11	15	28	54	4	224	16	244	18	10	4	32	515
07:30 AM	18	167	6	191	14	15	20	49	2	177	17	196	12	19	3	34	470
07:45 AM	24	168	4	196	18	21	26	65	7	193	38	238	22	50	4	76	575
Total	71	602	33	706	54	57	102	213	17	826	80	923	64	91	13	168	2010
08:00 AM	50	153	2	205	44	41	24	109	4	155	55	214	19	76	3	98	626
08:15 AM	52	156	14	222	71	60	33	164	21	97	72	190	17	80	3	100	676
08:30 AM	6	132	13	151	56	32	19	107	10	222	38	270	12	12	2	26	554
08:45 AM	12	166	8	186	11	3	9	23	4	164	7	175	15	6	7	28	412
Total	120	607	37	764	182	136	85	403	39	638	172	849	63	174	15	252	2268
Grand Total	191	1209	70	1470	236	193	187	616	56	1464	252	1772	127	265	28	420	4278
Apprch %	13	82.2	4.8		38.3	31.3	30.4		3.2	82.6	14.2		30.2	63.1	6.7		
Total %	4.5	28.3	1.6	34.4	5.5	4.5	4.4	14.4	1.3	34.2	5.9	41.4	3	6.2	0.7	9.8	

	State Street Southbound				Idyllwild Drive Westbound				State Street Northbound				Idyllwild Drive Eastbound				
Start Time	Left	Thru	Right	App. Total	Left	Thru	Right	App. Total	Left	Thru	Right	App. Total	Left	Thru	Right	App. Total	Int. Total
Peak Hour Analysis From 07:00 AM to 08:45 AM - Peak 1 of 1																	
Peak Hour for Entire Intersection Begins at 07:45 AM																	
07:45 AM	24	**168**	4	196	18	21	26	65	7	193	38	238	**22**	50	**4**	76	575
08:00 AM	50	153	2	205	44	41	24	109	4	155	55	214	19	76	3	98	626
08:15 AM	**52**	156	**14**	**222**	**71**	**60**	**33**	**164**	**21**	97	**72**	190	17	**80**	3	**100**	**676**
08:30 AM	6	132	13	151	56	32	19	107	10	**222**	38	**270**	12	12	2	26	554
Total Volume	132	609	33	774	189	154	102	445	42	667	203	912	70	218	12	300	2431
% App. Total	17.1	78.7	4.3		42.5	34.6	22.9		4.6	73.1	22.3		23.3	72.7	4		
PHF	.635	.906	.589	.872	.665	.642	.773	.678	.500	.751	.705	.844	.795	.681	.750	.750	.899

Counts Unlimited, Inc.
PO Box 1178
Corona, CA 92878
(951)268-6268

City of San Jacinto
N/S: State Street
E/W: Idyllwild Drive
Weather: Clear

File Name : 04_SJC_State_Idy AM
Site Code : 05722704
Start Date : 8/16/2022
Page No : 2

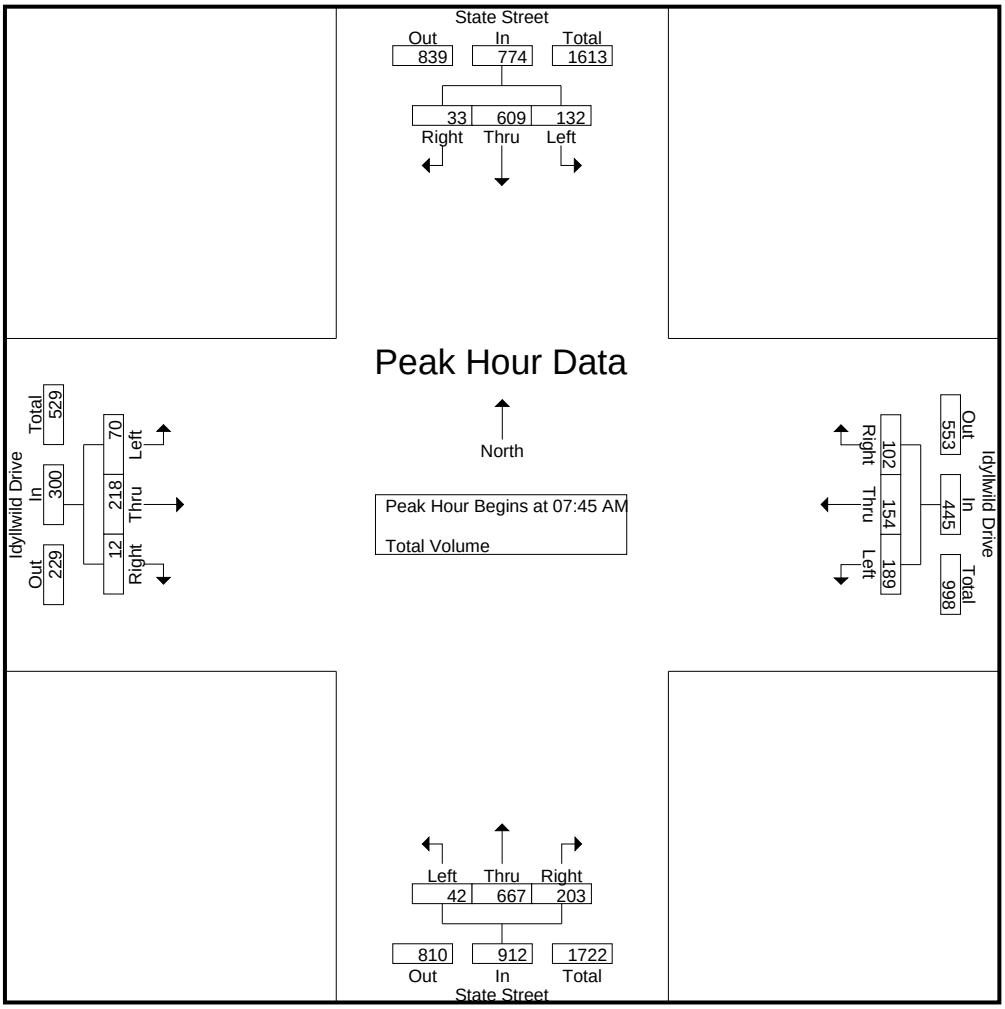

Peak Hour Analysis From 07:00 AM to 08:45 AM - Peak 1 of 1
Peak Hour for Each Approach Begins at:

	07:30 AM				07:45 AM				07:00 AM				07:30 AM			
+0 mins.	18	167	6	191	18	21	26	65	4	**232**	9	**245**	12	19	3	34
+15 mins.	24	**168**	4	196	44	41	24	109	4	224	16	244	**22**	50	**4**	76
+30 mins.	50	153	2	205	**71**	**60**	**33**	**164**	2	177	17	196	19	76	3	98
+45 mins.	**52**	156	**14**	**222**	56	32	19	107	**7**	193	**38**	238	17	**80**	3	**100**
Total Volume	144	644	26	814	189	154	102	445	17	826	80	923	70	225	13	308
% App. Total	17.7	79.1	3.2		42.5	34.6	22.9		1.8	89.5	8.7		22.7	73.1	4.2	
PHF	.692	.958	.464	.917	.665	.642	.773	.678	.607	.890	.526	.942	.795	.703	.813	.770

Counts Unlimited, Inc.
PO Box 1178
Corona, CA 92878
(951)268-6268

City of San Jacinto
N/S: State Street
E/W: Idyllwild Drive
Weather: Clear

File Name : 04_SJC_State_Idy PM
Site Code : 05722704
Start Date : 8/16/2022
Page No : 1

Groups Printed- Total Volume

	State Street Southbound				Idyllwild Drive Westbound				State Street Northbound				Idyllwild Drive Eastbound				
Start Time	Left	Thru	Right	App. Total	Left	Thru	Right	App. Total	Left	Thru	Right	App. Total	Left	Thru	Right	App. Total	Int. Total
04:00 PM	19	228	16	263	27	14	28	69	11	190	26	227	23	9	16	48	607
04:15 PM	21	203	15	239	10	12	16	38	2	176	21	199	11	9	2	22	498
04:30 PM	11	212	15	238	11	14	13	38	8	192	25	225	19	6	4	29	530
04:45 PM	19	195	14	228	5	7	9	21	8	181	19	208	18	11	7	36	493
Total	70	838	60	968	53	47	66	166	29	739	91	859	71	35	29	135	2128
05:00 PM	18	196	9	223	17	6	15	38	3	217	14	234	20	8	4	32	527
05:15 PM	13	223	13	249	12	12	17	41	7	217	19	243	18	15	3	36	569
05:30 PM	19	209	18	246	5	6	11	22	7	216	19	242	18	5	4	27	537
05:45 PM	14	198	12	224	8	7	4	19	9	163	18	190	9	7	3	19	452
Total	64	826	52	942	42	31	47	120	26	813	70	909	65	35	14	114	2085
Grand Total	134	1664	112	1910	95	78	113	286	55	1552	161	1768	136	70	43	249	4213
Apprch %	7	87.1	5.9		33.2	27.3	39.5		3.1	87.8	9.1		54.6	28.1	17.3		
Total %	3.2	39.5	2.7	45.3	2.3	1.9	2.7	6.8	1.3	36.8	3.8	42	3.2	1.7	1	5.9	

	State Street Southbound				Idyllwild Drive Westbound				State Street Northbound				Idyllwild Drive Eastbound				
Start Time	Left	Thru	Right	App. Total	Left	Thru	Right	App. Total	Left	Thru	Right	App. Total	Left	Thru	Right	App. Total	Int. Total
Peak Hour Analysis From 04:00 PM to 05:45 PM - Peak 1 of 1																	
Peak Hour for Entire Intersection Begins at 04:00 PM																	
04:00 PM	19	**228**	**16**	**263**	**27**	**14**	**28**	**69**	**11**	190	**26**	**227**	**23**	9	**16**	**48**	**607**
04:15 PM	**21**	203	15	239	10	12	16	38	2	176	21	199	11	9	2	22	498
04:30 PM	11	212	15	238	11	14	13	38	8	**192**	25	225	19	6	4	29	530
04:45 PM	19	195	14	228	5	7	9	21	8	181	19	208	18	**11**	7	36	493
Total Volume	70	838	60	968	53	47	66	166	29	739	91	859	71	35	29	135	2128
% App. Total	7.2	86.6	6.2		31.9	28.3	39.8		3.4	86	10.6		52.6	25.9	21.5		
PHF	.833	.919	.938	.920	.491	.839	.589	.601	.659	.962	.875	.946	.772	.795	.453	.703	.876

Counts Unlimited, Inc.
PO Box 1178
Corona, CA 92878
(951)268-6268

City of San Jacinto
N/S: State Street
E/W: Idyllwild Drive
Weather: Clear

File Name : 04_SJC_State_Idy PM
Site Code : 05722704
Start Date : 8/16/2022
Page No : 2

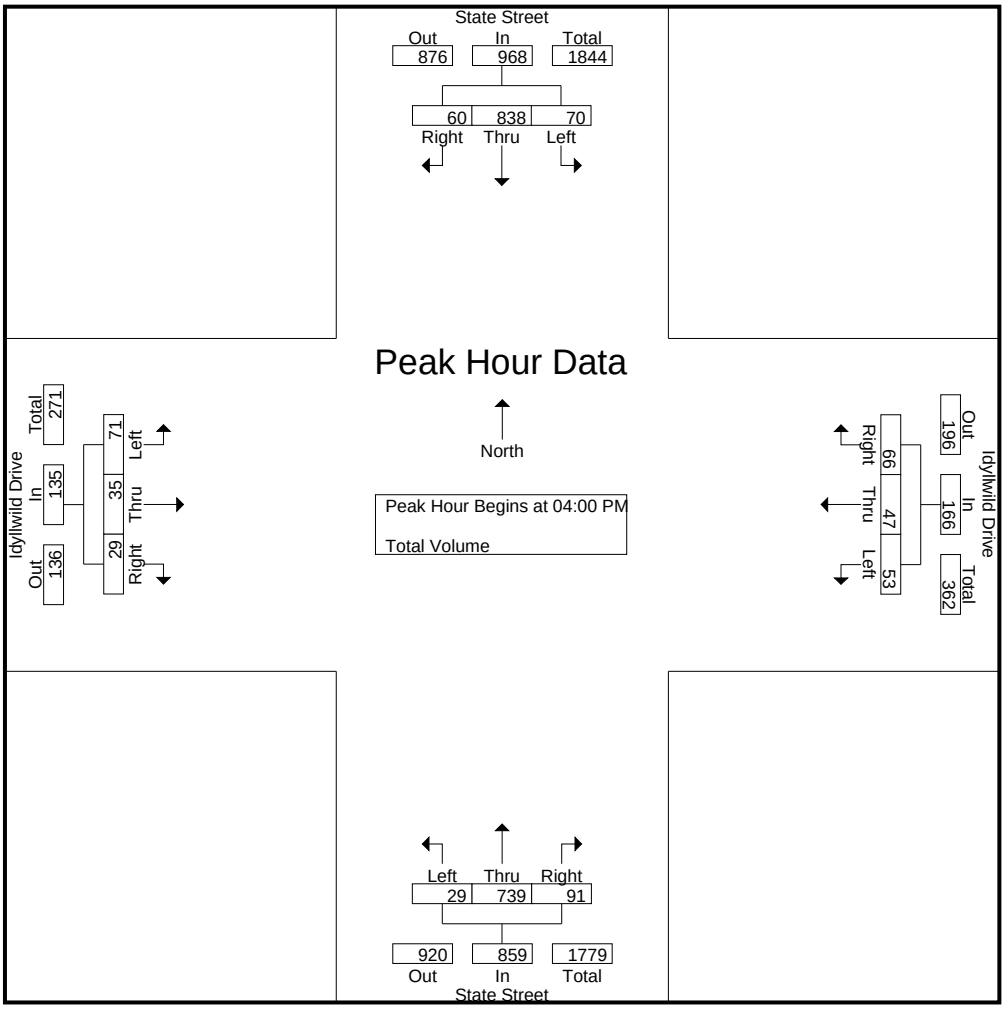

Peak Hour Analysis From 04:00 PM to 05:45 PM - Peak 1 of 1
Peak Hour for Each Approach Begins at:

	04:00 PM				04:00 PM				04:45 PM				04:00 PM			
+0 mins.	19	**228**	**16**	**263**	**27**	**14**	**28**	**69**	**8**	181	**19**	208	**23**	9	**16**	**48**
+15 mins.	**21**	203	15	239	10	12	16	38	3	**217**	14	234	11	9	2	22
+30 mins.	11	212	15	238	11	14	13	38	7	217	19	**243**	19	6	4	29
+45 mins.	19	195	14	228	5	7	9	21	7	216	19	242	18	**11**	7	36
Total Volume	70	838	60	968	53	47	66	166	25	831	71	927	71	35	29	135
% App. Total	7.2	86.6	6.2		31.9	28.3	39.8		2.7	89.6	7.7		52.6	25.9	21.5	
PHF	.833	.919	.938	.920	.491	.839	.589	.601	.781	.957	.934	.954	.772	.795	.453	.703

Counts Unlimited, Inc.
PO Box 1178
Corona, CA 92878
(951)268-6268

City of San Jacinto
N/S: Village at San Jacinto Driveway
E/W: Ramona Expressway
Weather: Clear

File Name : 05_SJC_Village_Ram AM
Site Code : 05722704
Start Date : 8/16/2022
Page No : 1

Groups Printed- Total Volume

	Village at San Jacinto Driveway Southbound			Ramona Expressway Westbound			Ramona Expressway Eastbound			
Start Time	Left	Right	App. Total	Thru	Right	App. Total	Left	Thru	App. Total	Int. Total
07:00 AM	13	11	24	220	26	246	0	128	128	398
07:15 AM	17	3	20	276	16	292	5	120	125	437
07:30 AM	26	12	38	224	20	244	4	121	125	407
07:45 AM	26	7	33	174	20	194	2	113	115	342
Total	82	33	115	894	82	976	11	482	493	1584
08:00 AM	23	8	31	208	23	231	4	137	141	403
08:15 AM	18	5	23	195	25	220	2	123	125	368
08:30 AM	21	4	25	178	19	197	2	116	118	340
08:45 AM	16	5	21	154	21	175	1	129	130	326
Total	78	22	100	735	88	823	9	505	514	1437
Grand Total	160	55	215	1629	170	1799	20	987	1007	3021
Apprch %	74.4	25.6		90.6	9.4		2	98		
Total %	5.3	1.8	7.1	53.9	5.6	59.5	0.7	32.7	33.3	

	Village at San Jacinto Driveway Southbound			Ramona Expressway Westbound			Ramona Expressway Eastbound			
Start Time	Left	Right	App. Total	Thru	Right	App. Total	Left	Thru	App. Total	Int. Total
Peak Hour Analysis From 07:00 AM to 08:45 AM - Peak 1 of 1										
Peak Hour for Entire Intersection Begins at 07:15 AM										
07:15 AM	17	3	20	**276**	16	**292**	**5**	120	125	**437**
07:30 AM	**26**	**12**	**38**	224	20	244	4	121	125	407
07:45 AM	26	7	33	174	20	194	2	113	115	342
08:00 AM	23	8	31	208	**23**	231	4	**137**	**141**	403
Total Volume	92	30	122	882	79	961	15	491	506	1589
% App. Total	75.4	24.6		91.8	8.2		3	97		
PHF	.885	.625	.803	.799	.859	.823	.750	.896	.897	.909

Counts Unlimited, Inc.
PO Box 1178
Corona, CA 92878
(951)268-6268

City of San Jacinto
N/S: Village at San Jacinto Driveway
E/W: Ramona Expressway
Weather: Clear

File Name : 05_SJC_Village_Ram AM
Site Code : 05722704
Start Date : 8/16/2022
Page No : 2

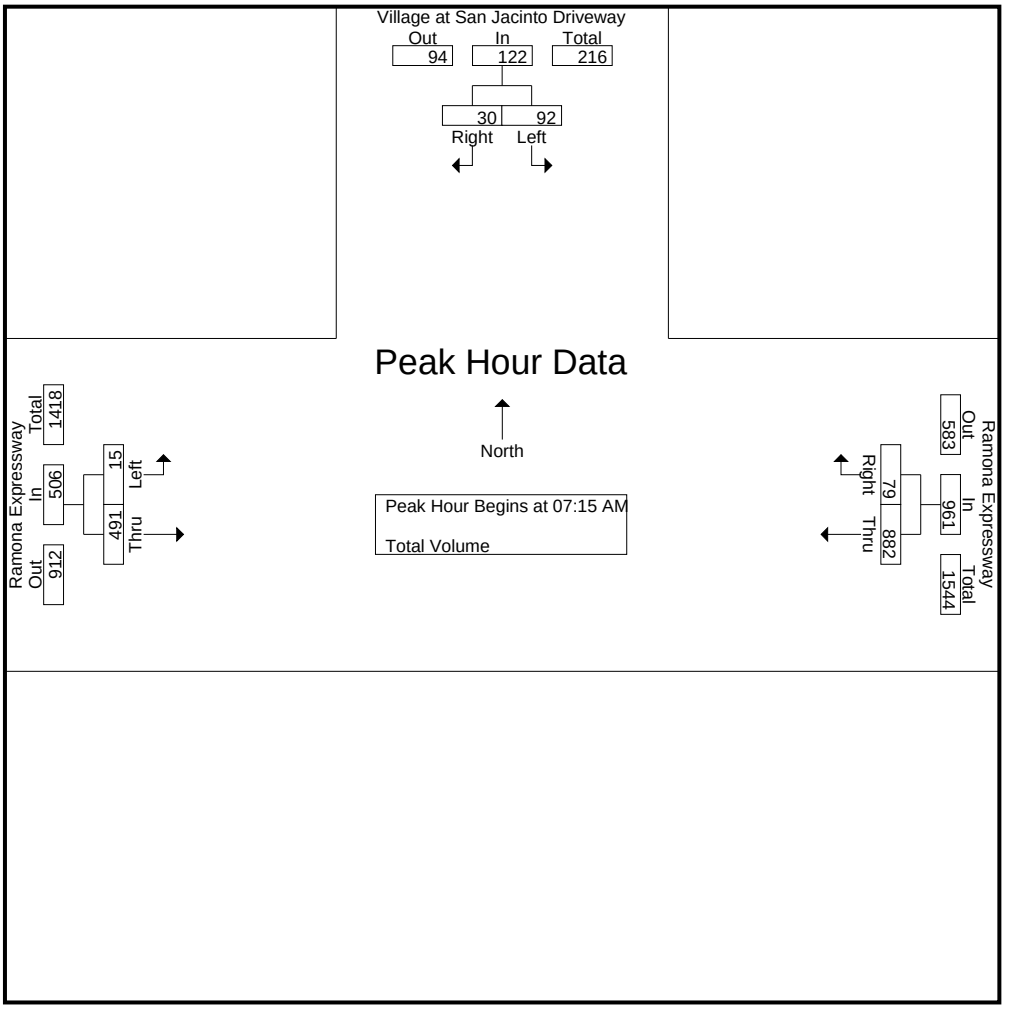

Peak Hour Analysis From 07:00 AM to 08:45 AM - Peak 1 of 1
Peak Hour for Each Approach Begins at:

	07:30 AM			07:00 AM			08:00 AM		
+0 mins.	**26**	**12**	**38**	220	**26**	246	**4**	**137**	**141**
+15 mins.	26	7	33	**276**	16	**292**	2	123	125
+30 mins.	23	8	31	224	20	244	2	116	118
+45 mins.	18	5	23	174	20	194	1	129	130
Total Volume	93	32	125	894	82	976	9	505	514
% App. Total	74.4	25.6		91.6	8.4		1.8	98.2	
PHF	.894	.667	.822	.810	.788	.836	.563	.922	.911

Counts Unlimited, Inc.
PO Box 1178
Corona, CA 92878
(951)268-6268

City of San Jacinto
N/S: Village at San Jacinto Driveway
E/W: Ramona Expressway
Weather: Clear

File Name : 05_SJC_Village_Ram PM
Site Code : 05722704
Start Date : 8/16/2022
Page No : 1

Groups Printed- Total Volume

	Village at San Jacinto Driveway Southbound			Ramona Expressway Westbound			Ramona Expressway Eastbound			
Start Time	Left	Right	App. Total	Thru	Right	App. Total	Left	Thru	App. Total	Int. Total
04:00 PM	33	21	54	158	29	187	14	254	268	509
04:15 PM	43	19	62	124	20	144	2	249	251	457
04:30 PM	33	29	62	132	21	153	8	221	229	444
04:45 PM	46	24	70	137	24	161	6	231	237	468
Total	155	93	248	551	94	645	30	955	985	1878
05:00 PM	41	21	62	93	21	114	8	220	228	404
05:15 PM	29	30	59	153	18	171	6	234	240	470
05:30 PM	27	14	41	131	23	154	7	267	274	469
05:45 PM	32	17	49	114	19	133	3	216	219	401
Total	129	82	211	491	81	572	24	937	961	1744
Grand Total	284	175	459	1042	175	1217	54	1892	1946	3622
Apprch %	61.9	38.1		85.6	14.4		2.8	97.2		
Total %	7.8	4.8	12.7	28.8	4.8	33.6	1.5	52.2	53.7	

	Village at San Jacinto Driveway Southbound			Ramona Expressway Westbound			Ramona Expressway Eastbound			
Start Time	Left	Right	App. Total	Thru	Right	App. Total	Left	Thru	App. Total	Int. Total
Peak Hour Analysis From 04:00 PM to 05:45 PM - Peak 1 of 1										
Peak Hour for Entire Intersection Begins at 04:00 PM										
04:00 PM	33	21	54	**158**	**29**	**187**	**14**	**254**	**268**	**509**
04:15 PM	43	19	62	124	20	144	2	249	251	457
04:30 PM	33	**29**	62	132	21	153	8	221	229	444
04:45 PM	**46**	24	**70**	137	24	161	6	231	237	468
Total Volume	155	93	248	551	94	645	30	955	985	1878
% App. Total	62.5	37.5		85.4	14.6		3	97		
PHF	.842	.802	.886	.872	.810	.862	.536	.940	.919	.922

Counts Unlimited, Inc.
PO Box 1178
Corona, CA 92878
(951)268-6268

City of San Jacinto
N/S: Village at San Jacinto Driveway
E/W: Ramona Expressway
Weather: Clear

File Name : 05_SJC_Village_Ram PM
Site Code : 05722704
Start Date : 8/16/2022
Page No : 2

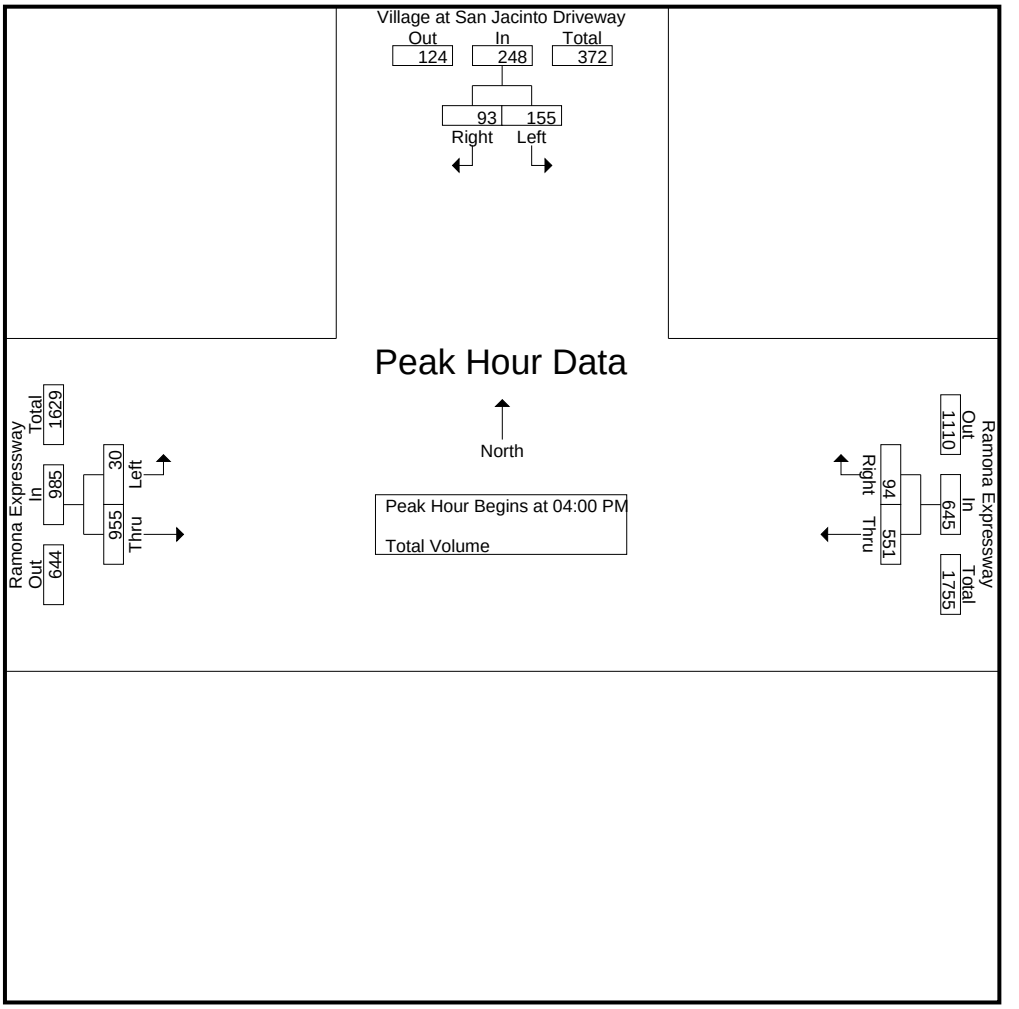

Peak Hour Analysis From 04:00 PM to 05:45 PM - Peak 1 of 1
Peak Hour for Each Approach Begins at:

	04:15 PM			04:00 PM			04:00 PM		
+0 mins.	43	19	62	**158**	**29**	**187**	**14**	**254**	**268**
+15 mins.	33	**29**	62	124	20	144	2	249	251
+30 mins.	**46**	24	**70**	132	21	153	8	221	229
+45 mins.	41	21	62	137	24	161	6	231	237
Total Volume	163	93	256	551	94	645	30	955	985
% App. Total	63.7	36.3		85.4	14.6		3	97	
PHF	.886	.802	.914	.872	.810	.862	.536	.940	.919

Counts Unlimited, Inc.
PO Box 1178
Corona, CA 92878
(951)268-6268

City of San Jacinto
N/S: Eagle Road
E/W: Ramona Expressway
Weather: Clear

File Name : 06_SJC_Eagle_Ram AM
Site Code : 05722704
Start Date : 8/16/2022
Page No : 1

Groups Printed- Total Volume

	Eagle Road Southbound				Ramona Expressway Westbound				Eagle Road Northbound				Ramona Expressway Eastbound				
Start Time	Left	Thru	Right	App. Total	Left	Thru	Right	App. Total	Left	Thru	Right	App. Total	Left	Thru	Right	App. Total	Int. Total
07:00 AM	6	1	6	13	2	213	10	225	24	8	3	35	3	129	8	140	413
07:15 AM	10	6	13	29	7	262	20	289	23	14	9	46	14	106	20	140	504
07:30 AM	25	8	15	48	8	214	23	245	9	12	5	26	11	118	18	147	466
07:45 AM	16	5	16	37	11	170	23	204	9	6	8	23	20	110	12	142	406
Total	57	20	50	127	28	859	76	963	65	40	25	130	48	463	58	569	1789
08:00 AM	11	11	10	32	28	215	14	257	14	6	10	30	20	130	13	163	482
08:15 AM	11	12	15	38	23	189	20	232	13	9	25	47	6	127	10	143	460
08:30 AM	12	9	14	35	6	168	23	197	12	8	9	29	14	110	13	137	398
08:45 AM	15	4	16	35	1	159	17	177	4	4	2	10	3	134	8	145	367
Total	49	36	55	140	58	731	74	863	43	27	46	116	43	501	44	588	1707
Grand Total	106	56	105	267	86	1590	150	1826	108	67	71	246	91	964	102	1157	3496
Apprch %	39.7	21	39.3		4.7	87.1	8.2		43.9	27.2	28.9		7.9	83.3	8.8		
Total %	3	1.6	3	7.6	2.5	45.5	4.3	52.2	3.1	1.9	2	7	2.6	27.6	2.9	33.1	

	Eagle Road Southbound				Ramona Expressway Westbound				Eagle Road Northbound				Ramona Expressway Eastbound				
Start Time	Left	Thru	Right	App. Total	Left	Thru	Right	App. Total	Left	Thru	Right	App. Total	Left	Thru	Right	App. Total	Int. Total
Peak Hour Analysis From 07:00 AM to 08:45 AM - Peak 1 of 1																	
Peak Hour for Entire Intersection Begins at 07:15 AM																	
07:15 AM	10	6	13	29	7	**262**	20	**289**	**23**	**14**	9	**46**	14	106	**20**	140	**504**
07:30 AM	**25**	8	15	**48**	8	214	**23**	245	9	12	5	26	11	118	18	147	466
07:45 AM	16	5	**16**	37	11	170	23	204	9	6	8	23	**20**	110	12	142	406
08:00 AM	11	**11**	10	32	**28**	215	14	257	14	6	**10**	30	20	**130**	13	**163**	482
Total Volume	62	30	54	146	54	861	80	995	55	38	32	125	65	464	63	592	1858
% App. Total	42.5	20.5	37		5.4	86.5	8		44	30.4	25.6		11	78.4	10.6		
PHF	.620	.682	.844	.760	.482	.822	.870	.861	.598	.679	.800	.679	.813	.892	.788	.908	.922

Counts Unlimited, Inc.
PO Box 1178
Corona, CA 92878
(951)268-6268

City of San Jacinto
N/S: Eagle Road
E/W: Ramona Expressway
Weather: Clear

File Name : 06_SJC_Eagle_Ram AM
Site Code : 05722704
Start Date : 8/16/2022
Page No : 2

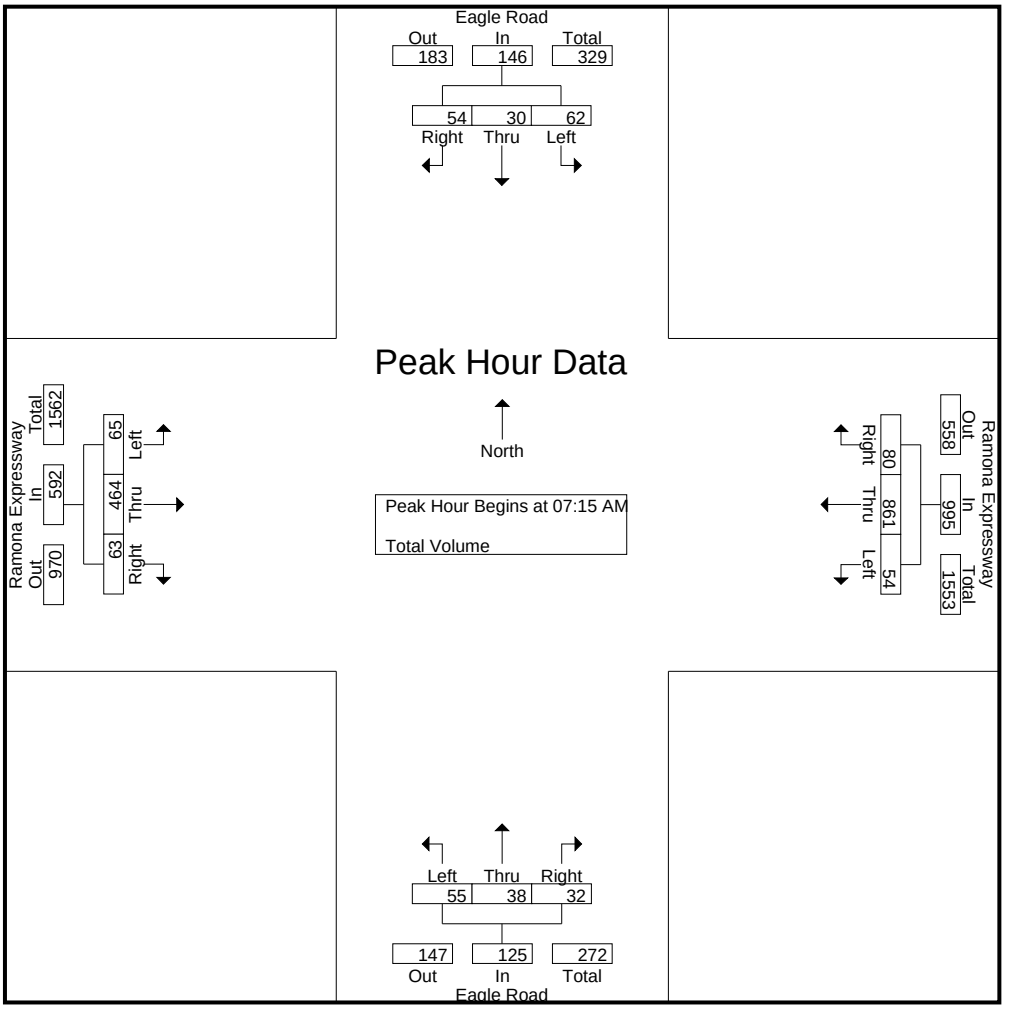

Peak Hour Analysis From 07:00 AM to 08:45 AM - Peak 1 of 1
Peak Hour for Each Approach Begins at:

	07:30 AM				07:15 AM				07:00 AM				07:30 AM			
+0 mins.	**25**	8	15	**48**	7	**262**	20	**289**	**24**	8	3	35	11	118	**18**	147
+15 mins.	16	5	**16**	37	8	214	**23**	245	23	**14**	**9**	**46**	**20**	110	12	142
+30 mins.	11	11	10	32	11	170	23	204	9	12	5	26	20	**130**	13	**163**
+45 mins.	11	**12**	15	38	**28**	215	14	257	9	6	8	23	6	127	10	143
Total Volume	63	36	56	155	54	861	80	995	65	40	25	130	57	485	53	595
% App. Total	40.6	23.2	36.1		5.4	86.5	8		50	30.8	19.2		9.6	81.5	8.9	
PHF	.630	.750	.875	.807	.482	.822	.870	.861	.677	.714	.694	.707	.713	.933	.736	.913

Counts Unlimited, Inc.
PO Box 1178
Corona, CA 92878
(951)268-6268

City of San Jacinto
N/S: Eagle Road
E/W: Ramona Expressway
Weather: Clear

File Name : 06_SJC_Eagle_Ram PM
Site Code : 05722704
Start Date : 8/16/2022
Page No : 1

Groups Printed- Total Volume

	Eagle Road Southbound				Ramona Expressway Westbound				Eagle Road Northbound				Ramona Expressway Eastbound				
Start Time	Left	Thru	Right	App. Total	Left	Thru	Right	App. Total	Left	Thru	Right	App. Total	Left	Thru	Right	App. Total	Int. Total
04:00 PM	17	7	18	42	7	155	7	169	13	6	21	40	13	264	13	290	541
04:15 PM	11	6	4	21	7	135	6	148	9	7	4	20	11	267	10	288	477
04:30 PM	14	7	14	35	6	135	5	146	9	5	4	18	13	222	13	248	447
04:45 PM	19	7	5	31	2	134	12	148	11	8	4	23	7	245	21	273	475
Total	61	27	41	129	22	559	30	611	42	26	33	101	44	998	57	1099	1940
05:00 PM	21	8	8	37	5	106	10	121	7	7	1	15	7	228	26	261	434
05:15 PM	26	12	23	61	3	150	12	165	5	7	5	17	12	246	14	272	515
05:30 PM	19	8	12	39	1	125	10	136	17	3	5	25	11	265	18	294	494
05:45 PM	16	4	16	36	2	107	12	121	9	6	5	20	18	212	17	247	424
Total	82	32	59	173	11	488	44	543	38	23	16	77	48	951	75	1074	1867
Grand Total	143	59	100	302	33	1047	74	1154	80	49	49	178	92	1949	132	2173	3807
Apprch %	47.4	19.5	33.1		2.9	90.7	6.4		44.9	27.5	27.5		4.2	89.7	6.1		
Total %	3.8	1.5	2.6	7.9	0.9	27.5	1.9	30.3	2.1	1.3	1.3	4.7	2.4	51.2	3.5	57.1	

	Eagle Road Southbound				Ramona Expressway Westbound				Eagle Road Northbound				Ramona Expressway Eastbound				
Start Time	Left	Thru	Right	App. Total	Left	Thru	Right	App. Total	Left	Thru	Right	App. Total	Left	Thru	Right	App. Total	Int. Total
Peak Hour Analysis From 04:00 PM to 05:45 PM - Peak 1 of 1																	
Peak Hour for Entire Intersection Begins at 04:00 PM																	
04:00 PM	17	**7**	**18**	**42**	**7**	**155**	7	**169**	**13**	6	**21**	**40**	**13**	264	13	**290**	**541**
04:15 PM	11	6	4	21	7	135	6	148	9	7	4	20	11	**267**	10	288	477
04:30 PM	14	7	14	35	6	135	5	146	9	5	4	18	13	222	13	248	447
04:45 PM	**19**	7	5	31	2	134	**12**	148	11	**8**	4	23	7	245	**21**	273	475
Total Volume	61	27	41	129	22	559	30	611	42	26	33	101	44	998	57	1099	1940
% App. Total	47.3	20.9	31.8		3.6	91.5	4.9		41.6	25.7	32.7		4	90.8	5.2		
PHF	.803	.964	.569	.768	.786	.902	.625	.904	.808	.813	.393	.631	.846	.934	.679	.947	.896

Counts Unlimited, Inc.
PO Box 1178
Corona, CA 92878
(951)268-6268

City of San Jacinto
N/S: Eagle Road
E/W: Ramona Expressway
Weather: Clear

File Name : 06_SJC_Eagle_Ram PM
Site Code : 05722704
Start Date : 8/16/2022
Page No : 2

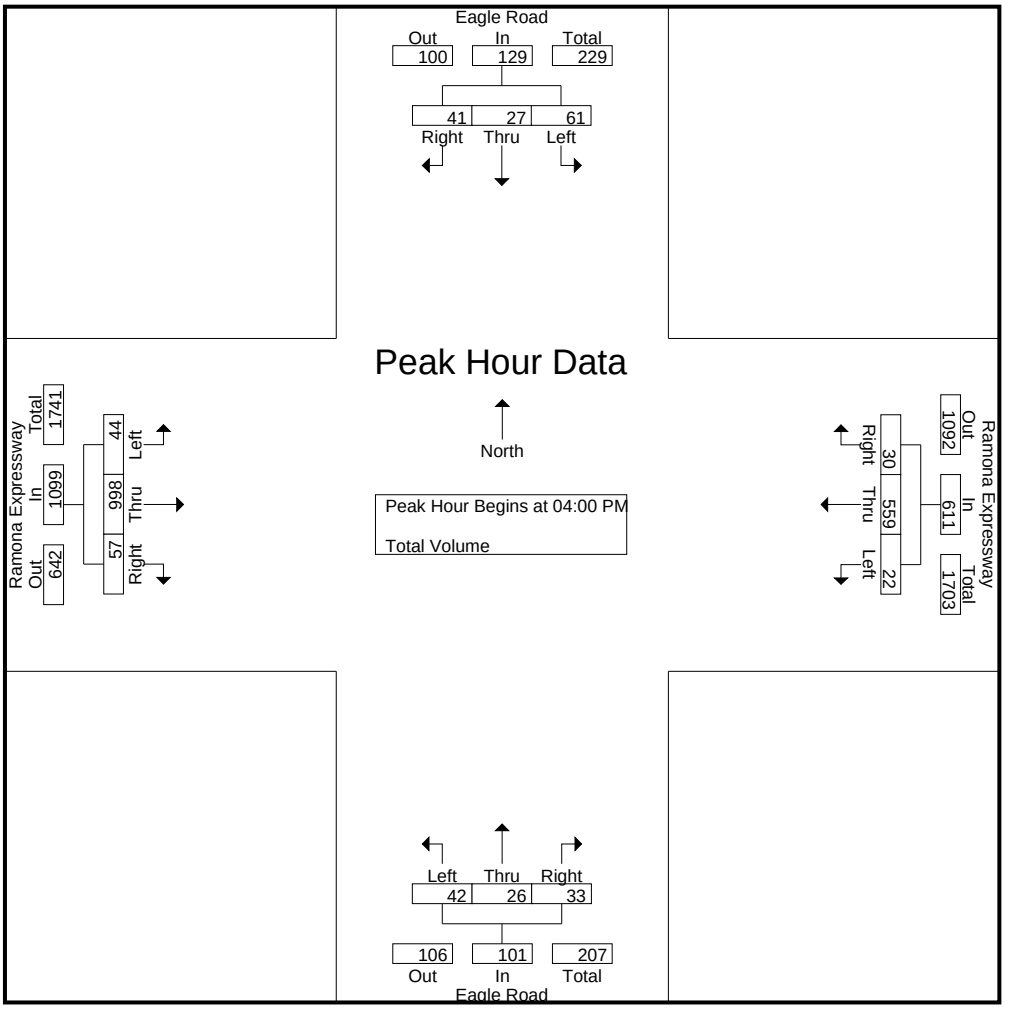

Peak Hour Analysis From 04:00 PM to 05:45 PM - Peak 1 of 1
Peak Hour for Each Approach Begins at:

	05:00 PM				04:00 PM				04:00 PM				04:45 PM			
+0 mins.	21	8	8	37	**7**	**155**	7	**169**	**13**	6	**21**	**40**	7	245	21	273
+15 mins.	**26**	**12**	**23**	**61**	7	135	6	148	9	7	4	20	7	228	**26**	261
+30 mins.	19	8	12	39	6	135	5	146	9	5	4	18	**12**	246	14	272
+45 mins.	16	4	16	36	2	134	**12**	148	11	**8**	4	23	11	**265**	18	**294**
Total Volume	82	32	59	173	22	559	30	611	42	26	33	101	37	984	79	1100
% App. Total	47.4	18.5	34.1		3.6	91.5	4.9		41.6	25.7	32.7		3.4	89.5	7.2	
PHF	.788	.667	.641	.709	.786	.902	.625	.904	.808	.813	.393	.631	.771	.928	.760	.935

Counts Unlimited, Inc.
PO Box 1178
Corona, CA 92878
(951)268-6268

City of San Jacinto
N/S: Eagle Road
E/W: Idyllwild Drive
Weather: Clear

File Name : 07_SJC_Eagle_Idy AM
Site Code : 05722704
Start Date : 8/16/2022
Page No : 1

Groups Printed- Total Volume

	Eagle Road Southbound			Idyllwild Drive Westbound			Idyllwild Drive Eastbound			
Start Time	Left	Right	App. Total	Thru	Right	App. Total	Left	Thru	App. Total	Int. Total
07:00 AM	4	9	13	34	7	41	7	21	28	82
07:15 AM	22	9	31	49	11	60	3	45	48	139
07:30 AM	16	7	23	47	8	55	6	53	59	137
07:45 AM	22	6	28	58	9	67	9	101	110	205
Total	64	31	95	188	35	223	25	220	245	563
08:00 AM	30	11	41	105	17	122	4	180	184	347
08:15 AM	34	12	46	151	30	181	8	196	204	431
08:30 AM	13	8	21	95	14	109	8	55	63	193
08:45 AM	8	7	15	14	6	20	5	18	23	58
Total	85	38	123	365	67	432	25	449	474	1029
Grand Total	149	69	218	553	102	655	50	669	719	1592
Apprch %	68.3	31.7		84.4	15.6		7	93		
Total %	9.4	4.3	13.7	34.7	6.4	41.1	3.1	42	45.2	

	Eagle Road Southbound			Idyllwild Drive Westbound			Idyllwild Drive Eastbound			
Start Time	Left	Right	App. Total	Thru	Right	App. Total	Left	Thru	App. Total	Int. Total
Peak Hour Analysis From 07:00 AM to 08:45 AM - Peak 1 of 1										
Peak Hour for Entire Intersection Begins at 07:45 AM										
07:45 AM	22	6	28	58	9	67	**9**	101	110	205
08:00 AM	30	11	41	105	17	122	4	180	184	347
08:15 AM	**34**	**12**	**46**	**151**	**30**	**181**	8	**196**	**204**	**431**
08:30 AM	13	8	21	95	14	109	8	55	63	193
Total Volume	99	37	136	409	70	479	29	532	561	1176
% App. Total	72.8	27.2		85.4	14.6		5.2	94.8		
PHF	.728	.771	.739	.677	.583	.662	.806	.679	.688	.682

Counts Unlimited, Inc.
PO Box 1178
Corona, CA 92878
(951)268-6268

City of San Jacinto
N/S: Eagle Road
E/W: Idyllwild Drive
Weather: Clear

File Name : 07_SJC_Eagle_Idy AM
Site Code : 05722704
Start Date : 8/16/2022
Page No : 2

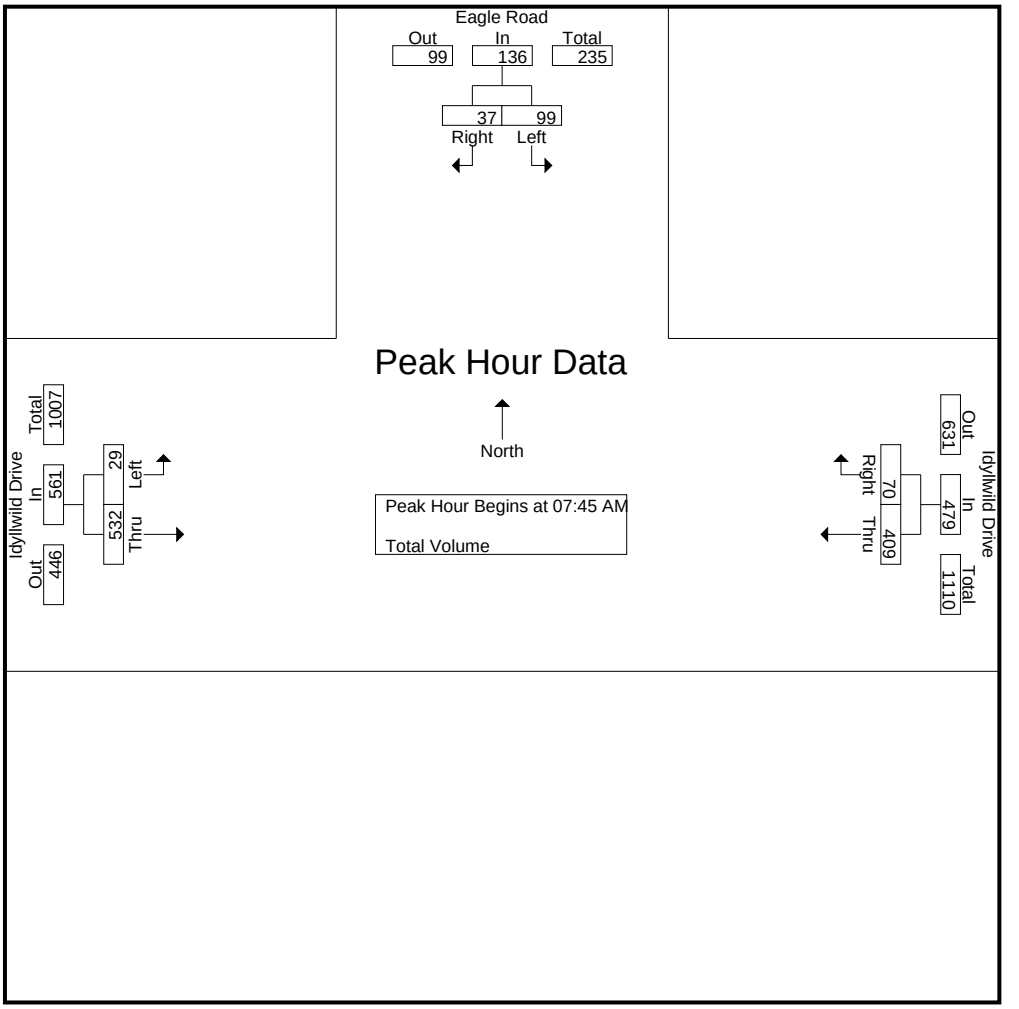

Peak Hour Analysis From 07:00 AM to 08:45 AM - Peak 1 of 1
Peak Hour for Each Approach Begins at:

	07:30 AM			07:45 AM			07:45 AM		
+0 mins.	16	7	23	58	9	67	**9**	101	110
+15 mins.	22	6	28	105	17	122	4	180	184
+30 mins.	30	11	41	**151**	**30**	**181**	8	**196**	**204**
+45 mins.	**34**	**12**	**46**	95	14	109	8	55	63
Total Volume	102	36	138	409	70	479	29	532	561
% App. Total	73.9	26.1		85.4	14.6		5.2	94.8	
PHF	.750	.750	.750	.677	.583	.662	.806	.679	.688

Counts Unlimited, Inc.
PO Box 1178
Corona, CA 92878
(951)268-6268

City of San Jacinto
N/S: Eagle Road
E/W: Idyllwild Drive
Weather: Clear

File Name : 07_SJC_Eagle_Idy PM
Site Code : 05722704
Start Date : 8/16/2022
Page No : 1

Groups Printed- Total Volume

	Eagle Road Southbound			Idyllwild Drive Westbound			Idyllwild Drive Eastbound			
Start Time	Left	Right	App. Total	Thru	Right	App. Total	Left	Thru	App. Total	Int. Total
04:00 PM	16	8	24	54	24	78	13	45	58	160
04:15 PM	9	5	14	36	12	48	10	39	49	111
04:30 PM	9	10	19	26	9	35	14	29	43	97
04:45 PM	24	3	27	18	10	28	12	38	50	105
Total	58	26	84	134	55	189	49	151	200	473
05:00 PM	20	5	25	32	12	44	4	33	37	106
05:15 PM	17	5	22	41	8	49	15	34	49	120
05:30 PM	8	3	11	18	15	33	6	35	41	85
05:45 PM	10	4	14	13	6	19	13	24	37	70
Total	55	17	72	104	41	145	38	126	164	381
Grand Total	113	43	156	238	96	334	87	277	364	854
Apprch %	72.4	27.6		71.3	28.7		23.9	76.1		
Total %	13.2	5	18.3	27.9	11.2	39.1	10.2	32.4	42.6	

	Eagle Road Southbound			Idyllwild Drive Westbound			Idyllwild Drive Eastbound			
Start Time	Left	Right	App. Total	Thru	Right	App. Total	Left	Thru	App. Total	Int. Total
Peak Hour Analysis From 04:00 PM to 05:45 PM - Peak 1 of 1										
Peak Hour for Entire Intersection Begins at 04:00 PM										
04:00 PM	16	8	24	**54**	**24**	**78**	13	**45**	**58**	**160**
04:15 PM	9	5	14	36	12	48	10	39	49	111
04:30 PM	9	**10**	19	26	9	35	**14**	29	43	97
04:45 PM	**24**	3	**27**	18	10	28	12	38	50	105
Total Volume	58	26	84	134	55	189	49	151	200	473
% App. Total	69	31		70.9	29.1		24.5	75.5		
PHF	.604	.650	.778	.620	.573	.606	.875	.839	.862	.739

Counts Unlimited, Inc.
PO Box 1178
Corona, CA 92878
(951)268-6268

City of San Jacinto
N/S: Eagle Road
E/W: Idyllwild Drive
Weather: Clear

File Name : 07_SJC_Eagle_Idy PM
Site Code : 05722704
Start Date : 8/16/2022
Page No : 2

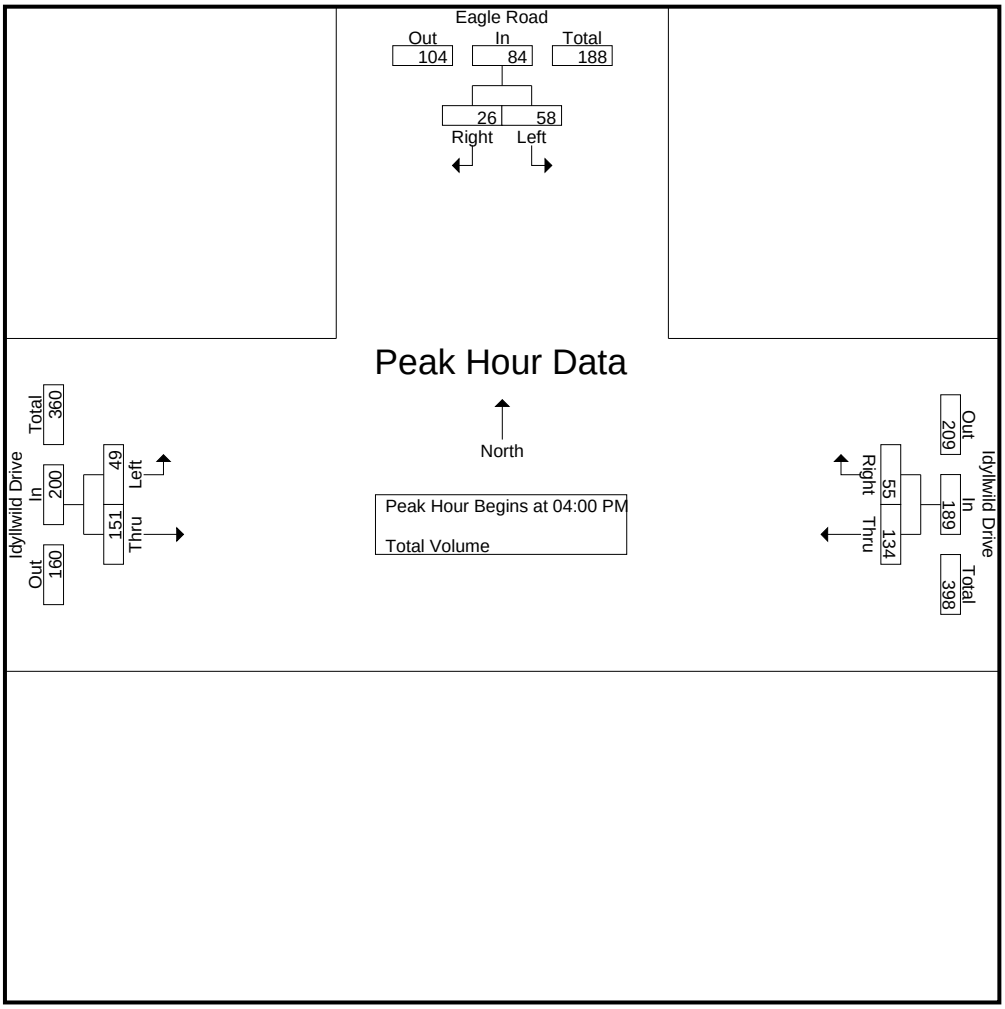

Peak Hour Analysis From 04:00 PM to 05:45 PM - Peak 1 of 1
Peak Hour for Each Approach Begins at:

	04:30 PM			04:00 PM			04:00 PM		
+0 mins.	9	**10**	19	**54**	**24**	**78**	13	**45**	**58**
+15 mins.	**24**	3	**27**	36	12	48	10	39	49
+30 mins.	20	5	25	26	9	35	**14**	29	43
+45 mins.	17	5	22	18	10	28	12	38	50
Total Volume	70	23	93	134	55	189	49	151	200
% App. Total	75.3	24.7		70.9	29.1		24.5	75.5	
PHF	.729	.575	.861	.620	.573	.606	.875	.839	.862

Counts Unlimited, Inc.
PO Box 1178
Corona, CA 92878
(951)268-6268

City of San Jacinto
N/S: Eagle Road
E/W: Buckingham Drive
Weather: Clear

File Name : 08_SJC_Eagle_Buck AM
Site Code : 05722704
Start Date : 8/16/2022
Page No : 1

Groups Printed- Total Volume

	Eagle Road Southbound			Buckingham Drive Westbound			Eagle Road Northbound			
Start Time	Left	Thru	App. Total	Left	Right	App. Total	Thru	Right	App. Total	Int. Total
07:00 AM	3	7	10	3	14	17	19	2	21	48
07:15 AM	7	27	34	6	12	18	34	1	35	87
07:30 AM	7	27	34	3	3	6	23	2	25	65
07:45 AM	1	27	28	3	7	10	18	3	21	59
Total	18	88	106	15	36	51	94	8	102	259
08:00 AM	4	47	51	4	6	10	25	4	29	90
08:15 AM	5	40	45	9	4	13	42	2	44	102
08:30 AM	5	22	27	3	3	6	25	1	26	59
08:45 AM	1	12	13	3	2	5	8	1	9	27
Total	15	121	136	19	15	34	100	8	108	278
Grand Total	33	209	242	34	51	85	194	16	210	537
Apprch %	13.6	86.4		40	60		92.4	7.6		
Total %	6.1	38.9	45.1	6.3	9.5	15.8	36.1	3	39.1	

	Eagle Road Southbound			Buckingham Drive Westbound			Eagle Road Northbound			
Start Time	Left	Thru	App. Total	Left	Right	App. Total	Thru	Right	App. Total	Int. Total
Peak Hour Analysis From 07:00 AM to 08:45 AM - Peak 1 of 1										
Peak Hour for Entire Intersection Begins at 07:30 AM										
07:30 AM	**7**	27	34	3	3	6	23	2	25	65
07:45 AM	1	27	28	3	**7**	10	18	3	21	59
08:00 AM	4	**47**	**51**	4	6	10	25	**4**	29	90
08:15 AM	5	40	45	**9**	4	**13**	**42**	2	**44**	**102**
Total Volume	17	141	158	19	20	39	108	11	119	316
% App. Total	10.8	89.2		48.7	51.3		90.8	9.2		
PHF	.607	.750	.775	.528	.714	.750	.643	.688	.676	.775

Counts Unlimited, Inc.
PO Box 1178
Corona, CA 92878
(951)268-6268

City of San Jacinto
N/S: Eagle Road
E/W: Buckingham Drive
Weather: Clear

File Name : 08_SJC_Eagle_Buck AM
Site Code : 05722704
Start Date : 8/16/2022
Page No : 2

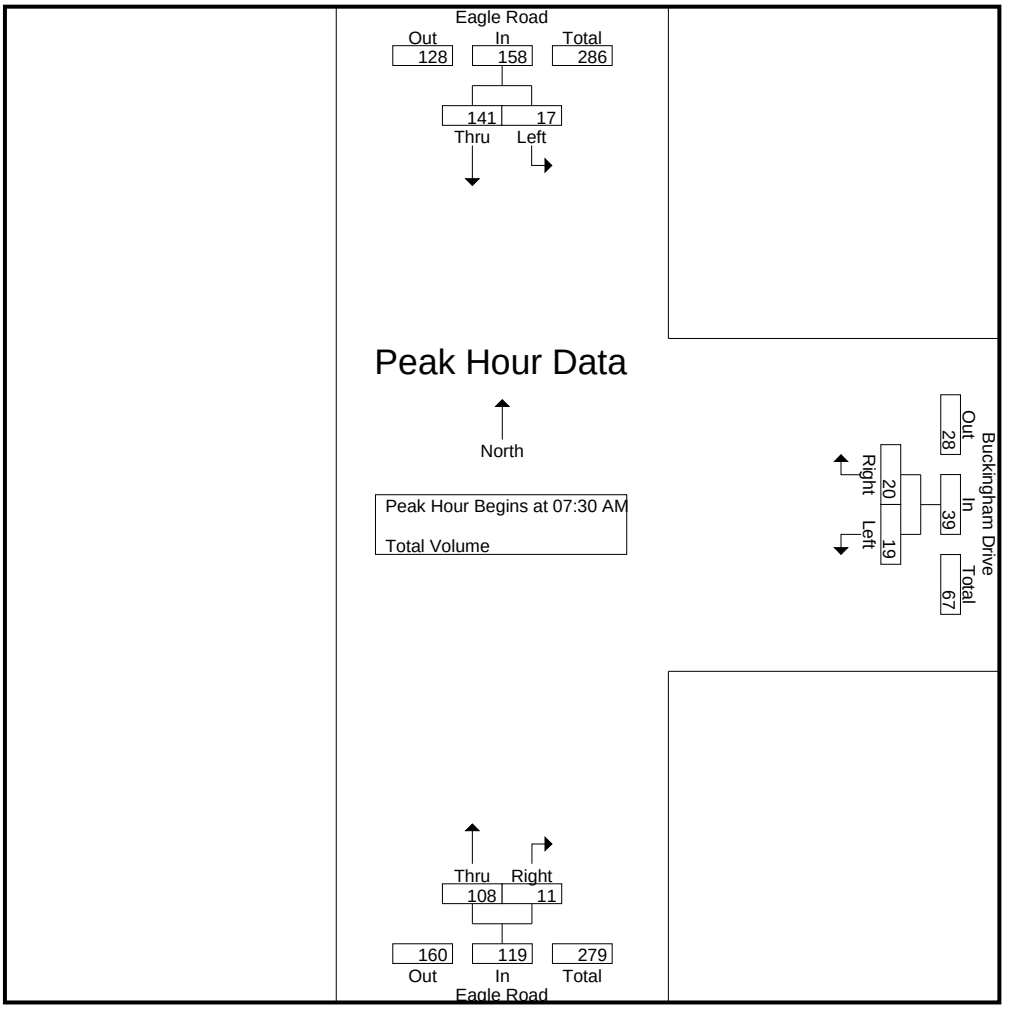

Peak Hour Analysis From 07:00 AM to 08:45 AM - Peak 1 of 1
Peak Hour for Each Approach Begins at:

	07:30 AM			07:00 AM			07:45 AM		
+0 mins.	**7**	27	34	3	**14**	17	18	3	21
+15 mins.	1	27	28	**6**	12	**18**	25	**4**	29
+30 mins.	4	**47**	**51**	3	3	6	**42**	2	**44**
+45 mins.	5	40	45	3	7	10	25	1	26
Total Volume	17	141	158	15	36	51	110	10	120
% App. Total	10.8	89.2		29.4	70.6		91.7	8.3	
PHF	.607	.750	.775	.625	.643	.708	.655	.625	.682

Counts Unlimited, Inc.
PO Box 1178
Corona, CA 92878
(951)268-6268

City of San Jacinto
N/S: Eagle Road
E/W: Buckingham Drive
Weather: Clear

File Name : 08_SJC_Eagle_Buck PM
Site Code : 05722704
Start Date : 8/16/2022
Page No : 1

Groups Printed- Total Volume

	Eagle Road Southbound			Buckingham Drive Westbound			Eagle Road Northbound			
Start Time	Left	Thru	App. Total	Left	Right	App. Total	Thru	Right	App. Total	Int. Total
04:00 PM	5	23	28	5	8	13	32	1	33	74
04:15 PM	6	16	22	4	3	7	15	3	18	47
04:30 PM	7	18	25	2	2	4	20	2	22	51
04:45 PM	5	24	29	1	4	5	15	5	20	54
Total	23	81	104	12	17	29	82	11	93	226
05:00 PM	4	33	37	3	1	4	12	2	14	55
05:15 PM	5	22	27	2	5	7	11	8	19	53
05:30 PM	9	18	27	3	4	7	22	3	25	59
05:45 PM	4	19	23	1	4	5	16	7	23	51
Total	22	92	114	9	14	23	61	20	81	218
Grand Total	45	173	218	21	31	52	143	31	174	444
Apprch %	20.6	79.4		40.4	59.6		82.2	17.8		
Total %	10.1	39	49.1	4.7	7	11.7	32.2	7	39.2	

	Eagle Road Southbound			Buckingham Drive Westbound			Eagle Road Northbound			
Start Time	Left	Thru	App. Total	Left	Right	App. Total	Thru	Right	App. Total	Int. Total
Peak Hour Analysis From 04:00 PM to 05:45 PM - Peak 1 of 1										
Peak Hour for Entire Intersection Begins at 04:00 PM										
04:00 PM	5	23	28	**5**	**8**	**13**	**32**	1	**33**	**74**
04:15 PM	6	16	22	4	3	7	15	3	18	47
04:30 PM	**7**	18	25	2	2	4	20	2	22	51
04:45 PM	5	**24**	**29**	1	4	5	15	**5**	20	54
Total Volume	23	81	104	12	17	29	82	11	93	226
% App. Total	22.1	77.9		41.4	58.6		88.2	11.8		
PHF	.821	.844	.897	.600	.531	.558	.641	.550	.705	.764

Counts Unlimited, Inc.
PO Box 1178
Corona, CA 92878
(951)268-6268

City of San Jacinto
N/S: Eagle Road
E/W: Buckingham Drive
Weather: Clear

File Name : 08_SJC_Eagle_Buck PM
Site Code : 05722704
Start Date : 8/16/2022
Page No : 2

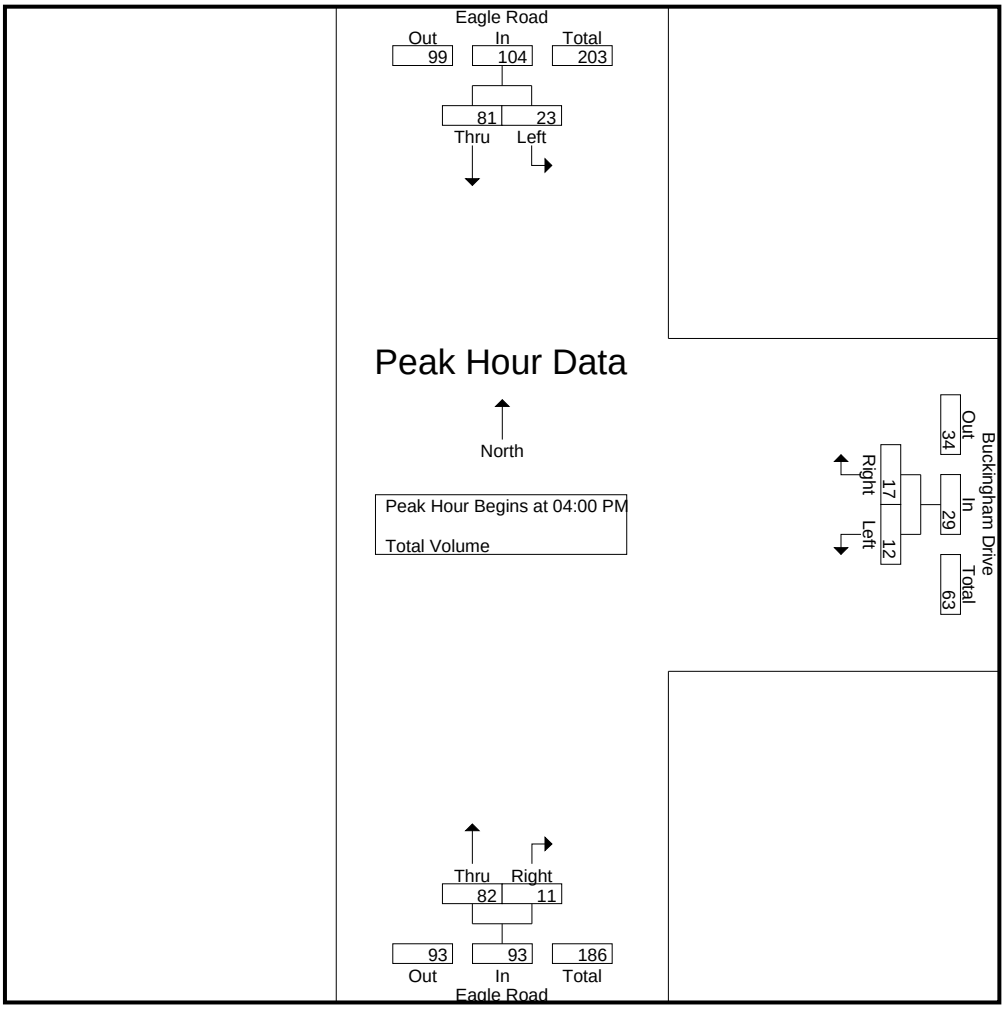

Peak Hour Analysis From 04:00 PM to 05:45 PM - Peak 1 of 1
Peak Hour for Each Approach Begins at:

	04:45 PM			04:00 PM			04:00 PM		
+0 mins.	5	24	29	**5**	**8**	**13**	**32**	1	**33**
+15 mins.	4	**33**	**37**	4	3	7	15	3	18
+30 mins.	5	22	27	2	2	4	20	2	22
+45 mins.	**9**	18	27	1	4	5	15	**5**	20
Total Volume	23	97	120	12	17	29	82	11	93
% App. Total	19.2	80.8		41.4	58.6		88.2	11.8	
PHF	.639	.735	.811	.600	.531	.558	.641	.550	.705