Appendix J

CEQA Environmental Intake Form

CEQA Review Form

CEQA Notice of Determination

STATE WATER RESOURCES CONTROL BOARD
WATER SUPPLY PERMIT ENVIRONMENTAL INTAKE FORM (EIF)

Instructions: All water supply permit applicants are required to fill out this EIF and attach the specified attachments.

Fill out Part 1 and attach the documents detailed under Part 1 question 10 if there is a completed California Environmental Quality Act (CEQA) or National Environmental Policy Act (NEPA) environmental document that has been circulated at the State Clearinghouse (SCH) or if a Notice of Exemption was filed at the SCH or at the county clerk.

If there is no environmental document or filed Notice of Exemption, fill out Part 1 and Part 2 and attach the required documentation detailed in Part 2 A. Applicants that fill out Part 2 are required to certify the document by signing it.

PART 1. GENERAL WATER SYSTEM AND PROJECT INFORMATION

1. Water system name: Bishop Creek Plant 5/Bishop Service Center
2. Water system number: CAXXXXXXX
3. Is Water System a ☒ Public agency or ☐ Private entity?
4. Water system contact person for this project:
   Phone Number: (626) 890-8441 Email: Eric.Hodder@sce.com
5. Project Name: Southern California Edison Bishop Service Center
6. Has the project already been constructed? ☐ yes ☒ no
7. If no, what is the estimated start date for construction? Pipeline construction began July 12, 2022
8. Is there an Environmental Document prepared for the Project? [i.e. Environmental Impact Report, Negative Declaration, Mitigated Negative Declaration, or NEPA documents (Environmental Impact Study, Environmental Assessment, FONSI, Categorical Exclusion)]
   ☒ yes ☐ no. If yes, what type? Mitigated Negative Declaration
9. Is there a Notice of Exemption or Categorical Exclusion for the project? ☐ yes ☒ no
10. Required Attachments for submittal to DDW:

- **If question 8 is answered 'yes',** Submit Part 1 and following attachments to DDW.
  Attachment 1 All environmental documentation (i.e. draft and final Negative Declaration, Mitigated Negative Declaration, or Environmental Impact Report, Mitigation Monitoring and Reporting Program if applicable, Resolution from lead agency adopting the CEQA document and approving the project, and Notice of Determination)

  The Conditional Use Permit (CUP) is attached as the approval of the Draft Mitigated Negative Declaration (MND), see Exhibit E in the attachment. County staff recommended approval of the MND as noted in the staff recommendation actions on page 2 of the CUP.

  Attachment 2 Project design plans

- **If question 9 is answered 'yes',** Submit Part 1 and following attachments to DDW.
  Attachment 1 Notice of Exemption stamped by county clerk or proof of posting on California Office of Planning and Research
  Attachment 2 Project design plans
  Attachment 3 Map of project site (overview of plan on aerial background)
- **If questions 8 and 9 are both answered 'no',** fill out Part 2.

PART 2. FOR NO ENVIRONMENTAL DOCUMENT AND PRIVATE ENTITIES

(Part 2 is for private entities with no environmental document, public agency exempt projects that did not file a Notice of Exemption, or public agency project with no discretionary approvals required)

Section A. Required Attachments

Attachment 1 Project design plans (minimum 30% design)
Attachment 2 Map of project site (overview of project elements on aerial background preferred)
Attachment 3 Overview photos of Project Site (If no Google street view available)
Attachment 4 Geotechnical report, if available

Section B. Agency Approvals and Permits (for private entities)

List and describe all project-related permits and any other governmental approvals required for this project, including those required by a city, county, regional or special district, or the state (e.g. encroachment permit, conditional use permit, rezoning, variance, etc.)

Table of Agency Approvals and Permits

Permit/Approval	Department, Agency	Phone Number	Email

Which public agency do you expect will be the first to permit the project? List the permitting agencies in chronological order: _____

Is there any federally owned land within the project footprint? ☐ yes ☐ no

If yes, what federal agency is the landowner? _____

Is this project part of a larger project or series of projects? ☐ yes ☐ no ☐ unknown

Section C. Project Description for CEQA Review

Provide a thorough project description that is detailed enough for CEQA review. This can be done using one of the three following methods.

Note method used by checking the appropriate box:

- Use the following questions as prompts to write a detailed PD and attach the description to the EIF or fill in PD box under C.1 (preferred) ☐
- Use as a form and fill in the information that pertains to the project ☐ or
- Attach an Engineering Report with the preferred project described and fill in the form fields that address details not discussed in the engineering report. ☐

C.1. General Project Information

Project Name:

Project Address/location (give nearest cross streets if no address): __

City: __County: _____ Zip:_____

Assessor Parcel Number: _____

Describe the location of the project. If there are project elements at different locations, describe all locations:___

Are the new project components on land owned by the water system? ☐ yes ☐ no

Provide the total size of the area to be impacted by construction (square foot or acres). Be sure to include new access roads, service lines, and staging areas: _____

Is the project within an existing facility? ☐ yes ☐ no partially within

Will the project involve construction in the same footprint with a similar capacity? ☐ yes ☐ no

Does the project involve new construction that is not within an existing facility? ☐ yes ☐ no

C.2. Water Tank(s)

Does the project include constructing a water tank(s)? ☐ yes ☐ no. (If no, do not fill out this section).

Number of tanks: _____

Volume of tank(s) in gallons: _____

Tank(s) dimensions: _____

Is it a replacement tank? ☐ yes ☐ no

If yes, list the capacity of the old tank(s): _____

Will the old tank(s) be destroyed as part of this project? ☐ yes ☐ no

If the new tank capacity is greater than 10% of the old tank's capacity, but is for fire flow, please provide the breakout of water usage:

Drinking Water (Gallons): _____

Fire Flow (Gallons): _____

Will there be a discharge basin? ☐ yes ☐ no. If yes, what are the basin dimensions (Length, Width, Depth): _____

Will the basin be lined or unlined?_____

C.3. Well(s)

Does the project include a new well(s)? ☐ yes ☐ no. (If no, do not fill out this section).

Number of new wells: _____

What is the expected capacity of the new well(s)? _____

Has the new well(s) already been drilled? ☐ yes ☐ no

Is the new well replacing an old well? ☐ yes ☐ no

If yes, what is the capacity of the old well: _____

Will the old well be converted to a different use? (e.g. monitoring well, standby well, irrigation)? ☐ yes ☐ no

Will the old well be destroyed/sealed? ☐ yes ☐ no

If no, what will be done with the old well? _____

Where is the old well located? _____

Will a new pump(s) be installed? If yes, is it electric or diesel?_____

Will the new pump be submersible or outside the well? _____

If outside the well, give the dimensions of the concrete pad: _____

Will there be a well house building? If yes, give dimensions: _____

Will there be a discharge basin? If yes, what are the basin dimensions (Length, Width, Depth)?

_____

C.4. Treatment System(s)

Does the project involve constructing a new or modifying an existing treatment system? (If not, do not fill out this section)._____

What kind of treatment system? _____

Will it be in a new building, in an existing building, or outside?_____

If in a new building, what are the dimensions of the building? _____

If outside, what are the pad dimensions? _____

What type of treatment media will be used? _____

What chemicals will be used? _____

Will the treatment media need to be removed occasionally? ☐ yes ☐ no

Will the media be taken to a hazardous waste treatment/disposal site? ☐ yes ☐ no

How is the spent media disposed? _____

Will the tanks be backwashed? If yes, describe _____

C.5. Piping

Will the project require pipelines to connect new facilities to the existing system or expand the service area? ☐ yes ☐ no (If no, do not fill out this section).

Will the new equipment be connected to the existing system on-site? ☐ yes ☐ no

If the connection to the system is not on-site, how many linear feet or miles of pipe is needed?

_____

C.6. Appurtenant Features

Will the project include appurtenant features not discussed above (lighting, fence, transformers, etc.)? ☐ yes ☐ no. (If no, do not fill out this section).

If yes, describe:_____

Will new electrical components be installed in the ground? If yes, what are the pad dimensions? _____

Will trenching for electrical be needed? If yes, how many linear feet of trenching?

Will new fencing be installed? ☐ yes ☐ no

What type of fencing? _____

The height of the fencing? _____

C.7. Additional comments

_____

Section D. Environmental Setting

Describe the topography and geology of the region (or attach a geotechnical report): _____

_____

Elevation range: ___

Describe current land use at the project site: _____

What are the vegetation types? (check all that apply)

	On Project Site	Surrounding Area
Urbanized	☐	☐
Landscaped	☐	☐
Ruderal (Weedy)	☐	☐
Grassland	☐	☐
Shrub/Chaparral	☐	☐
Oak Woodland	☐	☐

Woodland (other)	☐	☐
Forest	☐	☐
Riparian/Streamside	☐	☐
Wetland, vernal pools	☐	☐

If there are rivers, streams, or wetlands at or near the project site, list and state whether the flow is permanent, intermittent, or ephemeral: _____

Does the site have any land within coastal zone jurisdiction? ☐ yes ☐ no ☐ unknown

Are there protected status wildlife or plant species within or near the Project? ☐ yes ☐ no

☐ unknown

D. 1. Environmental Impacts

To the best of your ability, check any of the following impacts that might result from the project. Discuss below all items checked "yes" (attach additional sheets as necessary).

Will the Project:

	Yes	No	
1.	☐	☐	Remove mature native trees? Number: species/type:
2.	☐	☐	Clear or trim native vegetation?
3.	☐	☐	Interfere with use of recreational facilities?
4.	☐	☐	Alter existing drainage patterns?
5.	☐	☐	Be located in a floodplain?
6.	☐	☐	Change scenic views or vistas from residential areas, public lands, or roads?
7.	☐	☐	Produce significant amounts of solid waste or litter?
8.	☐	☐	Increase dust, ash, smoke, fumes, or odors in the vicinity?
9.	☐	☐	Substantially change noise or vibration levels in the vicinity (beyond the property line)?
10.	☐	☐	Be located on or near a seismic fault?
11.	☐	☐	Substantially increase fuel consumption?
12.	☐	☐	Impact wetlands?
13.	☐	☐	Convert farmland to non-farm use?

Describe any known potentially significant environmental effects that may result if the project is implemented (attach additional sheets as necessary):

D. 2. Certification

I hereby certify that the statements furnished in Part II and in the attached exhibits present the data and information required for this initial evaluation to the best of my ability, and that the facts, statements, and information presented are true and correct to the best of my knowledge and belief.

Signature of Applicant:_____Date:_____

Name:_____ Title:_____

List of Attachments

Attachment 1 – Conditional Use Permit (includes the Mitigated Negative Declaration as Exhibit E)

Attachment 2 – Project Design Plans

Attachment 1
Conditional Use Permit (includes the Mitigated Negative Declaration as Exhibit E)

Planning Department
168 North Edwards Street
Post Office Drawer L
Independence, California 93526

Phone: (760) 878-0263
FAX: (760) 878-0382
E-Mail: inyoplanning@inyocounty.us

AGENDA ITEM NO.: 7 (Action Item – Public Hearing)

PLANNING COMMISSION MEETING DATE: September 24, 2014

SUBJECT: Conditional Use Permit (CUP) 2013-03/Southern California Edison Company Variance 2014-02/ Southern California Edison Company Center/Fence Height 8' Variance 2014-03/Southern California Edison Company/Encroachment into front yard setback (monument sign)

EXECUTIVE SUMMARY

The applicant, Southern California Edison (SCE), is proposing to build a full service operations center on property located west of Bishop and east of Cerro Coso Community College, on an approximate 7-acre area within an 82-acre parcel and close its existing facilities located in the City of Bishop. The project will include: a new office building with a customer service center, garage, shop, laydown yard, and truck canopy buildings. SCE also proposes to construct and operate a helipad on the site and the project will require the installation of two new wells and two new water lines. The application includes a request for a fence height variance (from 6-feet to 8-feet) for safety and security. The applicant is also asking for a variance to encroach into the 50-foot front to place a monument sign. SCE owns the property on which the proposed project will be sited and currently operates a hydroelectric facility on Bishop Creek – Plant 6, and the Mt. Tom substation on the site. The parcel has been previously disturbed by the hydroelectric facility and substation's operations and there are dirt roads and power lines crossing it on numerous locations.

PROJECT INFORMATION.

Supervisory District: 1

Project Applicant: Scott Holland AIA, Architect – Elements Architecture, Inc.

Property Owner: Southern California Edison Company

Site Address/Community: West Bishop, along Highway-168 and located just east of Cerro Coso Community College

A.P.N.: 012-080-15

General Plan: Rural Protection (RP)

Zoning: Open Space with a Forty Acre Minimum (OS-40)

Size of Parcel: Approximately 82-Acres

Surrounding Land Use:

Location:	Use:	Gen. Plan Designation	Zoning
Site	Electrical Substation/ Vacant	Rural Protection (RP)	Open Space with a forty-acre minimum (OS-40)
North	Vacant	Natural Resources (NR)	Open Space with a forty-acre minimum (OS-40)
East	Vacant	Natural Resources (NR)	Open Space with a forty-acre minimum (OS-40)
South	Vacant	Rural Protection (RP)	Open Space with a forty-acre minimum (OS-40)
West	Vacant/Highway-168/Community College	Natural Resources (NR)	Open Space with a forty-acre minimum (OS-40)

Staff Recommended Action: **1.) Approve Conditional Use Permit (CUP) 2013-03/ Southern California Edison Company; Variance 2014-02/ Southern California Edison Company; and Variance 2014-03/ Southern California Edison Company with the Recommended Findings and Conditions of Approval and adopt the Draft Mitigated Negative Declaration of Environmental Impact.**

Alternatives:
1.) Deny the CUP.
2.) Approve the CUP with additional Conditions of Approval.
3.) Continue the public hearing to a future date, and provide specific direction to staff regarding what additional information and analysis is needed.

Project Planner: Cathreen Richards, Senior Planner

STAFF ANALYSIS

Background and Overview

SCE is proposing to build a full service operations center on property located west of Bishop, and just east of Cerro Coso Community College on an approximate 7-acre area, within an 82-acre parcel, (Exhibit A – Vicinity Map) and close the existing facilities located in the City of Bishop. The project will include: a new office building with a customer service center; a garage, shop, and laydown yard; hazardous material canopy; parking areas for customers, employees, and the service fleet (a total of 99 stalls); and truck parking canopy buildings. The total building area will be 32,555-square-feet and the total developed area of the site will be 291,852-square-feet (Exhibit B: Site Plan). All of the buildings will be constructed from pre-fabricated metal and be one-story in height. The applicant is asking for a fence height variance for up to 8-feet for security and safety. SCE also proposes to construct and operate a helipad on the site and the project will require the installation of two new wells and two new water lines. SCE owns the property on which the proposed project will be sited and currently operates a hydroelectric facility – Plant 6 and the Mt. Tom substation on the site. The parcel has been previously disturbed by the hydroelectric and substation operations and there are dirt roads and power lines crossing it on numerous locations. Construction is planned to take place from Fall-2014 through Fall-2015.

The new operations center will take the place of two smaller facilities SCE is currently using: a customer service center (office building) on 1.4-acres on Lagoon Street in the City of Bishop and a 2.6-acre Lay Down area, leased from the Los Angeles Department of Water and Power, also on Lagoon Street in the City of Bishop. SCE does not anticipate that there will be an increase in activities in the near future that would exceed what is currently being handed by the existing facilities located in Bishop.

The project proposal includes an administration building that will have a customer payment center, offices, assembly room, crew room, conference rooms, break rooms and restrooms. The garage and shop will be used to maintain SCE vehicles and trucks. Its hours of operation will generally be: Monday-Thursday 3:00p.m. – 12:00a.m.; and, Friday 12:00p.m. – 9:00p.m. Basic fuels and fluids necessary for vehicle maintenance and utility line components will be stored on site. Vehicle fuels and fluids will be stored in above ground tanks and in the shop and garage. Materials for utility service components will consist mostly of transformers that contain mineral oils. These will be stored in a hazardous material storage canopy. A helipad is also proposed. It will be used to transport personnel and materials to various locations and for patrolling utility lines. Helicopter flights will be infrequent with an average of about 2-4 flights per month.

The goals of the project are primarily to consolidate and make more efficient, the current facilities and activities conducted by SCE in the area. The applicant also wishes to up-date its facilities as the current service center and maintenance yard in Bishop are outdated; the sites they are located on are too small meet SCE's needs; they are on two separate sites; and, are located outside of SCE's service territory. The new location will also provide for safer conditions for SCE trucks hauling utility poles as they will no longer need to travel on Main Street, through the center of the City of Bishop.

The general project area is in a somewhat remote location, about 4-miles outside of the City of Bishop with vacant lands surrounding it. The properties directly adjacent to the site are vacant. Cerro Coso community college is located approximately 0.25-mile away. The service center will be located on the north-west corner of the property, about 700-feet from the Mt. Tom substation, 1,500-feet from Plant 6, and is adjacent to Highway-168. The project is proposed to be built on a parcel with the OS-40 Zoning designation, which allows for public, quasi-public uses with a Conditional Use Permit. The applicant is in the process of working out an agreement with Cerro Coso Community College to pipe potable water from the Service Center site to the college (it currently does not have a source of potable water) and in return the Service Center will be able to use the water stored on the college site for fire prevention.

The applicant is asking for a fence height variance to build a safety fence around the perimeter of the proposed Service Center. Inyo County Code (ICC) 18.78.160 Fences walls and hedges - Generally, states: *Except as otherwise provided, no fence, wall or hedge shall have a height in excess of six feet. No fence, wall or hedge in a required front yard, in the required street side yard of a corner lot, or in that part of the rear yard of a corner lot which abuts the required front yard of a key lot, shall have a height in excess of three and one-half feet. The term "wall" as used in this section shall not be deemed to apply to the wall of a building or to the supporting portion of a retaining wall.* The applicant will be storing hazardous and valuable materials for its operations on site. There will also be a fully equipped office and fleet vehicles parked on the site. Because of the dangers and potential for losses at the service center the applicant is asking for a variance to exceed the 6-foot fence height requirement and build an 8-foot, painted, tube steel fence around the perimeter of the property. The fence will be outside of the 50-foot front yard setback and therefore, will only exceed the 6-foot requirement, and not the 3.5-foot.

The applicant is also asking for a front-yard setback variance for a monument sign. Since the building will be setback off Highway-168 the applicant wishes to put a sign at the entrance to the driveway to help customers find the service center. The OS Zoning designation has setback requirements of:

- Front yard – fifty-feet
- Rear yard – fifty-feet
- Side yards – twenty-five-feet.

The proposed service center meets all of these setback requirements with regard to building plans. A variance is required by the Planning Commission, however, for the applicant to place a monument sign at the driveway entrance identifying the Service Center and address.

General Plan Consistency

A primary goal of this project is to consolidate and make more efficient, the current facilities and activities conducted by SCE in the area for utility (electricity) provision. The County's General Plan encourages the provision of adequate gas and electric services in the County, with Policy PSU-10.3: Provision of Services. The project is also consistent with the General Plan designation of Rural Protection. When the Rural Protection designation was adopted it was intended to continue to allow the uses identified in the

Natural Resources (NR) designation as it is was created in part as a subset of NR. Natural Resources states: The County may permit the siting of public facilities and utility system components in lands designated NR, which applies to RP.

Zoning Ordinance Consistency

The Open Space Zoning District allows for public and quasi-public buildings and uses, as conditional uses, per 18.12.040. The public, quasi-public, definition includes buildings and uses of recreational, religious, cultural or public service nature, excluding exterior storage, repair yards and warehouses. Facilities used for the provision of utility services are considered public, quasi-public uses. The CUP will allow the service center as a public, quasi-public use, and once permitted as such, will subsequently allow for the usual accessory uses as defined in 18.12.030 including: (B) private garages, parking areas and other structures used for the storage of equipment appurtenant to a permitted use; and (F) other uses and accessory buildings customarily appurtenant and clearly incidental to a permitted use including noncommercial agriculture.

COUNTY DEPARTMENT REVIEW/LOCAL AGENCIES

Planning Staff routed the application to the Departments of: Assessor, Tax Collector Treasurer, Environmental Health and Public Works and the Bishop Rural Fire District and the China Lake Naval Air Weapons Station. Staff received comments from the Departments of Environmental Health and Public Works and from China Lake Naval Air Weapons Station (Exhibit C). Comments from Environmental Health were with regard to County permits the applicant would need to obtain for wells, a septic system and hazardous materials. These permitting requirements have been included as conditions of approval for the Service Center.

A representative from the China Lake Naval Air Weapons Station commented that they have no issues with the helipad as the area is not within the R-2505 Airspace Complex and is not near Military Training Routes.

The Public Works Department provided comments regarding traffic (impacts to Ed Powers Road and Highway-168) and noise (traffic and the proposed helipad). Staff requested the applicant provide both noise and traffic studies (Exhibit D) to evaluate the proposed Service Center's potential impacts to Ed Powers Road due to increased truck traffic and to address all potential impacts to Highway-168 as well as potential noise impacts from traffic and the proposed helipad. The studies indicated that the proposed Service Center would neither result in undue impact to Ed Powers road nor that the traffic generated or helipad would cause impacts to sensitive receptors. Public works staff also requested the applicant provide information regarding containment and/or treatment of storm water runoff prior to allowing it to drain off-site and comments regarding fire safety, including the project location is in a State Responsibility Area for fire and has numerous proposed uses that could cause fire hazards. Staff has included conditions of approval that require the applicant obtain building and grading permits and provide the County Public Works Department a storm water treatment, containment, run-off, and drainage plan for the proposed project; a condition of approval stating proposed project property will have to annex into a Fire District or obtain a fire suppression agreement

with a Fire District and comply with the wildland/urban interface fire protection requirements, California Fire Code and the current building code requirements for fire suppression.

ENVIRONMENTAL REVIEW

Staff prepared a Draft Mitigated Negative Declaration and Initial Study for CUP 2013-03/Southern California Edison Company and circulated it for a 30-day review and comment (Exhibit E). The review period closed on September 12, 2014. The Initial Study identified several potentially significant impacts: aesthetics, biological, cultural and hydrological resources. The applicant provided information addressing these potential impacts and mitigation measures were developed to reduce the potential impacts to a level of insignificance and are included as conditions of approval for the project.

Aesthetics

The project location is adjacent to State Scenic Highway-168 and could potentially impact the views from the highway.

- *The applicant will be required to use a color pallet that blends with the surrounding landscape and plant vegetation as appropriate to screen it.*
- *The applicant is required to show compliance with General Plan Policy VIS-1.6 - Control of Light and Glare prior to the issuance of a final permit, to reduce the potential impact from the project's lighting to a level of less than significant. General Plan Policy VIS-1.6 states: The County shall require that all outdoor light fixture's including street lighting, externally illuminated signs, advertising displays and billboards use low-energy, shielded light fixtures which direct light downward (i.e., lighting shall not emit higher than a horizontal level) and which are fully shielded. Where public safety would not be compromised, the County shall encourage the use of low-pressure sodium lighting for all outdoor fixtures.*

Biological

A Biological Technical Report was prepared by the applicant for the project (Exhibit F). The report covered several issues within the project and surrounding area.

A special status vegetation community (Spiny hop sage) was observed within the greater project area and in the vicinity during a field survey conducted by the applicant. Although the project would result in direct and permanent impacts to an approximate 7-acre area of spiny hop sage habitat, it is not locally rare and the impacts are small relative to the extent that this vegetation community exists in the area (less than 1-percent would be affected).

- *The applicant will be required to provide a weed abatement and control plan prior to the issuance of any grading permits to serve as mitigation for the project resulting in impacts associated with the introduction of invasive weeds to less than significant.*

There are eight special status wildlife species that have moderate to high potential to occur on site (all of these species are either birds or bats), and one special status wildlife species with moderate potential to occur within the project area (white-tailed jackrabbit).

These species have the potential to forage within the project area; however, no nesting or roosting habitats for these species is present and no individuals were sighted during the survey.

- *To ensure that potential impacts to these species are addressed the applicant will be required to: within 7 days of ground-disturbing activities associated with construction or grading that would occur during the nesting/breeding season of native bird species potentially nesting on the site (typically February through August in the Project region, or as determined by a qualified biologist), the applicant shall have a single pre-construction survey conducted by a qualified biologist to determine if active nests of bird species protected by the Migratory Bird Treaty Act and/or the California Fish and Game Code are present in the disturbance zone or within 300 feet (500 feet for raptors) of the disturbance zone. If nesting birds are found to be present, surveys will continue on a weekly basis until those within the disturbance zone or buffer area, are finished nesting. If active nests are found, clearing and construction within 300 feet of the nest (500 feet for raptors) shall be postponed or halted, at the discretion of the biologist in consultation with the California Department of Fish and Wildlife (CDFW), until the nest is vacated and juveniles have fledged, as determined by the biologist, and there is no evidence of a second attempt at nesting. Limits of construction to avoid an active nest shall be established in the field with flagging, fencing, or other appropriate barriers and construction personnel shall be instructed on the sensitivity of nest areas. The biologist shall serve as a construction monitor during those periods when construction activities will occur near active nest areas to ensure that no inadvertent impacts to these nests occur.*

Although the project area is within the northwestern portion of the Western Mojave Recovery Unit of the Desert Tortoise, no suitable burrows for desert tortoise were observed in the project area during the survey. Also, the closest occurrence record for this species is located approximately 72-miles south of the project area. This species is not expected to occur on the site.

- *To ensure that potential impacts to any of the species addressed in the technical report are addressed, mitigation measures include: No more than 72 hours prior to the start of construction activities, the project applicant shall conduct a pre-construction biological survey for special-status species determined to have potential to occur in within the Project Area (including desert tortoise). If special-status species are detected during pre-construction surveys, appropriate mitigation plans will be prepared by a qualified biologist. Additionally, a biological monitor will be present periodically during construction to ensure that impacts to special-status species do not occur and disturbance boundaries are respected.*

The project area includes about 1-acre of jurisdictional waters that could be impacted by the proposed project. These impacts could include to biological resources, including habitat loss or conversion from erosion, sedimentation and hydro-modification.

- *The applicant will be required to obtain permits from the appropriate agencies as part of their project approval. To ensure that potential impacts to jurisdictional*

waters are addressed the project applicant shall provide evidence that all required regulatory permits have been obtained or are not required by the regulatory agencies. Required permits may include the U.S. Army Corps of Engineers Section 404 of the Clean Water Act, CDFW Section 1600 Streambed Alteration Agreement, and Regional Water Quality Control Board Section 401 certification. Regulatory permit applications would demonstrate that adequate avoidance, minimization, and if deemed necessary by the agencies, compensatory mitigation, have been provided to reduce adverse impacts to downstream biological resources. Adequate avoidance and minimization measures may include incorporation of storm-water management facilities to minimize increases in storm-water discharge rates (preferably minimizing losses to private land in Inyo County).

Cultural

A Cultural Resources Survey and Evaluation Report was prepared for the project There is a site in the project area that was determined to be eligible for California Register of Historic Resources (CRHR). This area is not located within the project's footprint, however. Historic refuse scatters have also been found in the project area, but again, outside of the project footprint. No archaeological or paleontological resources have been formally recorded at the site, nor were any identified during the applicant's survey, the area has been historically mapped with camps/villages, irrigation ditches and gathering areas. Due to this previous mapping, there is the potential that archaeological resources may be found on the site

- *Since there is the potential for additional cultural resources to be found on the site based on what has been found previously, mitigation measures to ensure that potential impacts to potential resources are addressed include: a qualified archaeologist (Project Archaeologist) be retained to implement a limited cultural mitigation program. An archaeological monitor and Native American monitor will be present during the initial disturbances of native soil with potential to contain cultural deposits. Cultural resource monitoring may be reduced from initial full-time monitoring to periodic spot checks, or discontinued if appropriate, once the Project Archaeologist determines that there is little or no risk to encounter cultural material. Results of this cultural monitoring program should be submitted to the County in a report, commensurate with the results of the mitigation (e.g., a letter report if negative). Should any cultural resources be encountered within the project area, monitors should be given the authority to temporarily halt or divert work from the location of the discovery in order to assess and evaluate the discovery. In the event that human remains or related cultural material are encountered, Section 15064.5(e) of CEQA requires work to be stopped and the County Coroner notified in accordance with California Health and Safety Code 7050.5*

Comments

The Draft Mitigated Negative Declaration of Environmental Impact and Checklist were noticed, sent to the State Clearinghouse and made available for public review on August 15, 2014 (SCH#2014-081051). The 30-day public comment period closed on September

12, 2014. Staff received 4 comment letters on the Draft Negative Declaration from: Great Basin Unified Air Pollution Control District; California Department of Transportation – Division of Aeronautics; California Department of Fish and Wildlife; and, California Department of Transportation – District 9 (Exhibit G - comment letters).

Comment, Great Basin Unified Air Pollution Control District (GBUAPCD): Staff from GBUAPCD wanted to make sure that County staff and the applicant were aware of all the dust control regulations that will apply to the project. These included:

- District Rule 400, Ringelmann Chart. The Ringelmann Chart is a scale developed by the Bureau of Mines to quantify the amount of dust in the air. For instance, Ringelmann 1, (which corresponds directly with 20% opacity), means 20% of the light that would pass through space is being blocked by the particulate in the air.
- District Rule 401, Fugitive Dust. This rule that reasonable measures be taken to prevent dust generated from a site, from moving across the property boundary.
- District Rule 402, Nuisance. Which states; A person shall not discharge from any source whatsoever, such quantities of air contaminants or other materials which cause injury, detriment, nuisance or annoyance to any considerable number of persons or to the public or which endanger the comfort, repose, health or safety of any such persons or the public or which cause or have a natural tendency to cause injury or damage to business or property.

Response
Staff facilitated contact between the applicant and GBUAPCD. A representative from GBUAPCD subsequently informed staff that the applicant understood the issues and the timeframes to apply for permits from GBUAPCD. Staff has included as a condition of approval that the applicant obtain all necessary permits from the GBUAPCD.

Comment, California Department of Transportation – Division of Aeronautics: Staff from the Division provided comments regarding the permitting that would be required for the operation of a helipad at the Service Center site.

Response
The Mitigated Negative Declaration of Environmental Impact evaluates potential impacts regarding noise and safety. As indicated in this evaluation the impacts will be less than significant. As the Airport Land Use Commission, the County Department of Public Works has considered the helipad and recommends its approval. Staff has also included State, County and Federal Aviation Administration (FAA) permitting requirements for the helipad as conditions of approval for the project.

Comment, California Department of Fish and Wildlife (CDFW)
CDFW staff commented that the condition of approval for Mitigation Measure BIO-4 requiring evidence the applicant will obtain all necessary permits including potentially a Streambed Alteration (1600 Notification). CDFW staff informed County staff in their comment letter that this process can take up to 90-days. CDFW staff also included comments on mitigation measure MM-BIO-2 requiring surveys within 7-days, stating that not all birds nest in vegetation; some nest directly in the ground and for these species

the 7-days is not adequate. CDFW staff recommended that preconstruction surveys take place no more than 3-days prior to vegetation clearing.

Response
The applicant will begin all necessary permitting once the Conditional Use Permit is granted, as it seemed premature to apply for permits for a project that might not be approved. Staff has included that preconstruction surveys take place no more than 3-days prior to vegetation clearing in the conditions of approval.

Comment, California Department of Transportation (Cal Trans) – District 9:
Staff from Cal Trans commented that the applicant has been working with their staff on providing the necessary Cal Trans design and permitting of the Service Center. Cal Trans staff ask that the County condition the project accordingly with Cal Trans requirements. Cal Trans staff also commented that due to the proximity to the college's access (with left turn lane) and through-traffic speeds, improvements shall include a center turn west of and a left turn land east of the Service Center access. Cal Trans staff also requested a condition that no stormwater runoff that is greater than what is historic, is directed onto the State right-of-way and pointed out that constructions dates are not realistic.

Response
Staff has added as a condition of approval that the applicant continue to work with Cal Trans District-9 to appropriately design for a State Scenic Highway and appropriately design for access to a State Highway, with regard to Highway-168, and obtain all required permits from Cal Trans related to Highway-168 and the project. Staff has also included as a condition of approval: the applicant will provide a center turn west of and a left turn lane east of the Service Center access, as required by Cal Trans District 9 and the applicant will provide, as part of their stormwater runoff plan, evidence that stormwater run-off greater than what is historic, will be directed onto the State right-of-way. All of the construction dates in the applicant's proposal are currently unrealistic and will need to be adjusted, due to the time involved in processing the CUP and Variances.

RECOMMENDATIONS
Planning Department staff recommends the approval of:

- Conditional Use Permit No. 2013-03/ Southern California Edison Company;
- Variance 2014-02/ Southern California Edison Company /Fence Height;
- Variance 2014-03/ Southern California Edison Company /Encroachment into Front Yard Setback;
- Adopt the Draft Negative Declaration of Environmental Impact; and, approve with the following Findings and Conditions of Approval:

Findings – Conditional Use Permit 2013-03/ Southern California Edison Company

1. The proposed Conditional Use Permit is consistent with the Inyo County General Plan Land Use designation of Rural Protection (RP) as it allows for the siting of public facilities and utility system components on lands with the RP designation. *[Evidence: The proposed Conditional Use Permit is consistent with the goals and objectives of the Rural Protection LU 2.10 designation. When the Rural Protection*

designation was adopted it was intended to continue to allow the uses identified in the Natural Resources (NR) designation as it is was created in part as a subset of NR. Natural Resources states: The County may permit the siting of public facilities and utility system components in lands designated NR, which applies to RP; therefore, no conflicts exist with the policies and objectives of the RP designation in the General Plan.]

2. The proposed Conditional Use Permit is consistent with the Inyo County Zoning Ordinance, which permits "public or quasi-public facilities" as a conditional use in the Open Space Zoning designation.
   [Evidence: Section 18.12 The Open Space Zone allows for Public and Quasi-Public buildings and uses, as conditional uses (18.12.040(C). The Open Space definition includes buildings and uses of recreational, religious, cultural or public service nature, excluding exterior storage, repair yards and warehouses. The provision of utility services is considered a use of a public service nature. Once the project is conditionally permitted for a public, quasi-public use the accessory uses identified for the Open Space designation apply. This includes 18.12.030 (B) Private garages, parking areas and other structures used for the storage of equipment appurtenant to a permitted use; 18.12.030 (E) Signs and advertising for permitted, accessory to conditional uses in compliance with the provisions of Chapter 18.75 and subject to the provisions of Section 18.020.050; and, 18.12.030 (F) Other uses and accessory buildings customarily appurtenant and clearly incidental to a permitted use including non-commercial agriculture.]

3. The proposed Conditional Use Permit is necessary or desirable.
   [Evidence: General Plan Policy 10.3 states: The County shall encourage the provision of adequate gas and electric service and facilities to serve existing and future needs. A primary goal of this project is to consolidate and make more efficient, the current facilities and activities conducted by SCE in the area for utility (electricity) provision; therefore, this is a desirable use.]

4. The proposed Conditional Use Permit is properly related to other uses and transportation and service facilities in the vicinity.
   [Evidence: The proposed service center will be sited on property that is currently being used to generate and distribute electricity. It also adjacent to Highway-168 and close to the County maintained Ed Powers Road. Currently, SCE's service yard on Lagoon Street, results in truck traffic on Main Street in the City of bishop. The proposed new Service Center, located outside of Bishop, will effectively take truck traffic off the already busy Main Street in the City of Bishop. The proposed Service Center will have minimal impact on transportation and service facilities on Highway-168 and Ed Powers Road and will reduce impacts on Main Street in Bishop.]

5. The proposed Conditional Use Permit would not, under all the circumstances of this case, affect adversely the health or safety of persons living or working in the vicinity or be materially detrimental to the public welfare.

[Evidence: The proposed Service Center will not have an impact on surrounding properties. The closest residential properties to the proposed service center are located approximately 0.5-mile away and commercial properties are about 2-miles. With the exception of the Community College, the surrounding area is vacant open space. The applicant has provided noise and traffic studies indicating that the activities at the service center will not create impacts to the Community College. The Service Center will also be required to meet the building requirements specified in the Uniform Building Code by the Inyo County Building and Safety Department, as well as, General Plan Policy VIS-1.6 Control of Light and Glare; and the mitigation measures identified in the Draft Negative Declaration of Environmental Impact. These requirements will result in no affects that could adversely affect the health or safety of persons living or working in the vicinity or be materially detrimental to the public welfare.]

6. Operating requirements necessitate the Service Center to locate at the proposed site. *[Evidence: The applicant requires a modernized facility to meet the current and future needs for their service territory. The facilities that SCE currently operates in the City of Bishop, are too small, outdated, located on two separate parcels, and are not within SCE's service territory. SCE owns the property that the proposed Service Center will be located on and already operates a hydroelectric facility and substation on it. The proposed site provides the necessary acreage for SCE to conduct its operations in one place, and is located in the OS Zoning designation, which allows for public, quasi-public uses as a conditional use. Therefore, the operating requirements necessitate the Service Center's location at the proposed site.*

7. Based upon the Initial Study and all oral and written comments received, adopt the Negative Declaration of Environmental Impact and certify that the provisions of the California Environmental Quality Act have been satisfied.
[Evidence: An Initial Study and Draft Negative Declaration of Environmental Impact were prepared and circulated for public review and comment pursuant to the provisions of the California Environmental Quality Act. The 30-day public comment period ended on September 12, 2014. Staff received 4-comment letters. The issues raised within these letters were address as conditions of approval for the project. No additional potentially significant environmental impacts from the construction and operation of the Service Center were identified in the course of the Initial Study and Draft Negative Declaration of Environmental Impact circulation. Based upon the environmental evaluation of the proposed project, the Planning Department finds that the project does not have the potential to create a significant adverse impact on flora or fauna; natural, scenic and historic resources; the local economy; public health, safety, and welfare. This constitutes a Negative Finding for the Mandatory Findings required by Section 15065 of the CEQA Guidelines.*]*

<u>Provision for Variances</u>
The Inyo County Zoning Ordinance states that any variance to the terms of the Zoning Ordinance may be granted if such a variance would *"not be contrary to its general intent or*

the public interest, where due to special conditions or exceptional characteristics of the property or its location or surroundings, a literal enforcement would result in practical difficulties or unnecessary hardships" (Section 18.81.040).

Further, the Zoning Ordinance states that the following three Findings must be affirmed in order for any variance to be granted:

1. That there are exceptional circumstances applicable to the property involved, or to the intended use, which do not generally apply to other property in the same district.
2. That the result would not be detrimental to the public welfare, or injurious to property in the vicinity.
3. That the strict application of the regulation sought to be modified would result in practical difficulties or hardships inconsistent with, and not necessary for the attainment of, the general purposes of this title.

In addition to the above Findings specified in the Inyo County Zoning Ordinance, California State Government Code requires the following Findings for any variance:

4. The proposed variance does not constitute a grant of special privileges inconsistent with the limitations upon other properties in the vicinity and zone in which the property is situated.
5. The proposed variance does not authorize a use or activity that is not otherwise expressly authorized by the zoning regulation governing the parcel of property.
6. The proposed variance is consistent with the General Plan.
7. The requirements of the California Environmental Quality Act have been met.

Affirmative variance Findings must describe the special circumstances that act to physically differentiate the project site from its neighbors and make it unique, and thus uniquely justified for a variance; alternatively, negative findings must describe how the project's physical characteristics are not unique or exceptional, and therefore do not justify a variance.
ALL seven of the Findings must be affirmed in order for a variance to be approved.

Findings – Variance 2014-02/ Southern California Edison Company – Fence Height
Staff has reviewed the application and can find that all seven of the required Findings can be affirmed:

1. That there are exceptional circumstances applicable to the property involved, or to the intended use, which do not generally apply to other property in the same district.
   (Affirmative – Evidence: Inyo County Code (ICC) 18.78.160 limits the height of fences, walls and hedges to 6-feet for the rear and side yards and 3.5-feet for the front. Due to the nature of the activities the applicant will be conducting at the site, there will be materials and equipment that can be hazardous or valuable beyond what is usual. Land within the County that is designated Open Space is mostly vacant. Some has agriculture and residential uses. Although, there are

valuable assets on some of this land, especially agriculture equipment and some that could be considered hazardous, the proposed service center will have fuel and fluids and utility transmission components stored at the site, as well as, a vehicle fleet and fully equipped offices in a somewhat remote location. All of these factors on one location is unique, and warrants the applicants need for a higher, and therefore, more effective fence.)

2. That the result would not be detrimental to the public welfare, or injurious to property in the vicinity.
   (Affirmative – Evidence: A higher fence would be more likely to lessen the potential detriment to the public welfare, as it will provide for safer Service Center site, and safer situation for the other properties in the vicinity. As the higher fence will likely detour theft and potential contact with hazardous materials, as such, the current variance request to allow an 8-foot fence is not allowing for activities that are detrimental or injurious to either pubic welfare or other properties in the vicinity.)

3. That the strict application of the regulation sought to be modified would result in practical difficulties or hardships inconsistent with, and not necessary for thc attainment of, the general purposes of this title.
   (Affirmative – Evidence: The proposed fence height variance is being requested to keep the project site safe. The proposed project area is in a somewhat remote location and will include hazardous materials and valuable equipment. The location makes safety and security issues more difficult to address as there are fewer eyes on the property. The strict application of a 6-foot fence height could create difficulties/hardships for the applicant in keeping the area safe. Granting a variance for an 8-foot fence would still allow the general purposes of Title 18.78 of the Zoning Code to be fulfilled, as 18.78.170., allows for exceptions for protective fencing. Although 18.78.170 addresses public property and swimming pools, the intent is safety; and therefore, granting a variance for protective fencing is within the general purposes of this title.)

4. The proposed variance does not constitute a grant of special privileges inconsistent with the limitations upon other properties in the vicinity and zone in which the property is situated.
   (Affirmative – Evidence: The project site is in a somewhat remote location and in the OS zone and RP General Plan designation. The Service Center is an allowed conditional use in the OS zone and an allowed use in the RP General Plan designation. The variance will allow for a higher fence than is allowed by 18.78.160. Any person with property in the OS zone and RP General Plan designations could apply for the same use and the same variance. 18.78.170., allows for exceptions for protective fencing and although 18.78.170 addresses public property and swimming pools, the intent is safety; and therefore, granting a variance for protective fencing is within the general purposes of title 18.78. For these reasons, the requested variance to allow an 8-foot fence cannot be said to constitute a grant of special privileges. It would, instead, allow the property

owners the ability to provide for better safety at their facility, which benefits other properties in the vicinity.)

5. The proposed variance does not authorize a use or activity that is not otherwise expressly authorized by the zoning regulation governing the parcel of property. *(Affirmative – Evidence: The proposed variance applies to fence height requirements. The proposed public, quasi-public uses are permitted as a conditional use in the OS Zone.)*

6. The proposed variance is consistent with the Inyo County General Plan *(Affirmative – Evidence: The requested variance presents no inconsistencies with the General Plan land use designation of the project site, which is Rural Protection that allows for the siting of public facilities and utility system components.)*

7. The requirements of the California Environmental Quality Act have been met. *(Affirmative – Evidence: The requested variance is being considered along with Conditional Use Permit 2013-03/ Southern California Edison Company and is subject to the same evaluation and mitigations as identified in the Draft Mitigated Negative Declaration.)*

Findings – Variance 2014-03/ Southern California Edison Company – Encroachment into a front yard setback (monument sign)

Staff has reviewed the application and can find that all seven of the required Findings can be affirmed:

1. That there are exceptional circumstances applicable to the property involved, or to the intended use, which do not generally apply to other property in the same district.
   (Affirmative – Evidence: Inyo County Code (ICC) 18.12 requires a 50-foot front yard setback. Due to the nature of the activities the applicant will be conducting at the site, a sign located at the entrance to the Service Center is necessary for customers, vendors and employees from other areas to identify its location. Placing sign 50-feet back off of the road could cause traffic hazards as drivers try to read it at a distance, while driving. Land within the County that is designated Open Space is mostly vacant. Some has agriculture and residential uses. Most of these uses are not of a commercial nature and do not require roadside identification. These factors are unique with regard to the OS zone, and warrant the applicants need for a front yard setback encroachment.)

2. That the result would not be detrimental to the public welfare, or injurious to property in the vicinity.
   (Affirmative – Evidence: A sign located at the entrance to the Service Center as opposed to a sign set 50-feet back, will be easier for drivers on Highway-168 to read and would be more likely to lessen the potential detriment to the public welfare, as it will provide for safer traffic conditions. Allowing the encroachment into the 50-foot front yard setback is not allowing for activities that are

detrimental or injurious to either pubic welfare or other properties in the vicinity as it will provide for an overall safer environment for the Service Center and the other properties and drivers in the vicinity.)

3. That the strict application of the regulation sought to be modified would result in practical difficulties or hardships inconsistent with, and not necessary for the attainment of, the general purposes of this title.
   (Affirmative – Evidence: The proposed encroachment into the front yard setback is being requested, in part, to keep the project site and traffic on Highway-168 safe. The proposed project area is located adjacent to Highway-168 that provides access to the Starlite residential subdivision and recreational opportunities to the west. Since the Service Center is proposed to be built next to the Highway, traffic safety issues become more prevalent. The strict application of the 50-foot setback could create traffic safety issues as drivers try to read a sign located 50-feet away. Granting a variance for an encroachment into the 50-foot setback would still allow the general purposes of Title 18.12 of the Zoning Code to be fulfilled, as the OS zone allows for public, quasi-public uses as a conditional use; therefore, the setback encroachment will not affect the general purposes of 18.12.)

4. The proposed variance does not constitute a grant of special privileges inconsistent with the limitations upon other properties in the vicinity and zone in which the property is situated.
   (Affirmative – Evidence: The proposed Service Center is located in the OS zone and about .25-miles from Cerro Coso Community College. The project site is located along a State Highway and is in the OS zone and RP General Plan designation. The Service Center is an allowed conditional use in the OS zone and an allowed use in the RP General Plan designation. The variance will allow for an encroachment into the 50-foot front yard setback to place a sign. Any person with property in the OS zone and RP General Plan designations could apply for the same use and the same variance. Cerro Coso Community College as a sign similar to what the applicant is proposing and located within the 50-foot front yard setback. The college is also located in the OS zone. For these reasons, the requested variance to an encroachment into the front yard setback to place a sign cannot be said to constitute a grant of special privileges. It would, instead, allow the property owners the ability to provide for better safety on the adjacent State Highway, which benefits other properties in the vicinity)

5. The proposed variance does not authorize a use or activity that is not otherwise expressly authorized by the zoning regulation governing the parcel of property.
   (Affirmative – Evidence: The proposed variance applies to a front yard setback requirements. The proposed public, quasi-public uses are permitted as a conditional use in the OS Zone.)

6. The proposed variance is consistent with the Inyo County General Plan

(Affirmative – Evidence: The requested variance presents no inconsistencies with the General Plan land use designation of the project site, which is Rural Protection that allows for the siting of public facilities and utility system components.)

7. The requirements of the California Environmental Quality Act have been met. *(Affirmative – Evidence: The requested variance is being considered along with Conditional Use Permit 2013-03/ Southern California Edison Company and is subject to the same evaluation and mitigations as identified in the Draft Mitigated Negative Declaration.)*

Conditions of Approval

1. **Hold Harmless**
   The applicant/developer shall defend, indemnify and hold harmless Inyo County agents, officers, and employees from any claim, action or proceeding against the County or its agents, officers, or employees to attack, set aside, void or annul an approval of the county, its advisory agencies, its appeals board, or legislative body concerning: Conditional Use Permit No. 2013-03/ Southern California Edison Company; Variance 2014-02/ Southern California Edison Company /Fence Height; and, Variance 2014-03/ Southern California Edison Company /Encroachment front yard setback. The County reserves the right to prepare its own defense.

2. **Compliance with County Code**
   - The applicant/developer shall conform to all applicable provisions of Inyo County Code.
   - The applicant/developer shall conform to all building requirements specified in the Uniform Building Code by the Inyo County Building and Safety Department.
   - The applicant is required to obtain all necessary county building and grading permits, and provide the County Public Works Department with a storm water treatment, containment, run-off, and drainage plan for the proposed project that also includes evidence that there will be no stormwater run-off greater than what is historic directed onto the State right-of-way.
   - The applicant is required to obtain all necessary permits from the Inyo County Department of Environmental Health for water service, sewage and hazardous wastes.
   - The applicant is required to obtain all necessary permits from the State for water service and must also meet the provisions of the State of California Well Standards, Water Works Standards and the California Safe Drinking Water Act.
   - The applicant is required to annex the proposed Service Center property into a local Fire District or obtain a fire suppression agreement with a local Fire District and comply with the wildland/urban interface fire protection

requirements, California Fire Code and the current building code requirements for fire suppression.

3. **Conformance with Submitted Plot Plan**
   - Development shall be in substantial conformance with the submitted plot plan.

4. **Aesthetics**
   - The applicant will use a color pallet that blends with the surrounding landscape and plant vegetation as appropriate to screen.
   - The applicant is required to show compliance with General Plan Policy VIS-1.6 - Control of Light and Glare prior to the issuance of a final permit, to reduce the potential impact from the project's lighting to a level of less than significant. General Plan Policy VIS-1.6 states: The County shall require that all outdoor light fixture's including street lighting, externally illuminated signs, advertising displays and billboards use low-energy, shielded light fixtures which direct light downward (i.e., lighting shall not emit higher than a horizontal level) and which are fully shielded. Where public safety would not be compromised, the County shall encourage the use of low-pressure sodium lighting for all outdoor fixtures.

5. **Biological**
   - The applicant is required to provide a weed abatement and control plan prior to the issuance of any grading permits to serve as mitigation for the project resulting in impacts associated with the introduction of invasive weeds to less than significant.
   - The applicant is required to: within 3-days of ground-disturbing activities associated with construction or grading that would occur during the nesting/breeding season of native bird species potentially nesting on the site (typically February through August in the Project region, or as determined by a qualified biologist), the applicant shall have a single pre-construction survey conducted by a qualified biologist to determine if active nests of bird species protected by the Migratory Bird Treaty Act and/or the California Fish and Game Code are present in the disturbance zone or within 300 feet (500 feet for raptors) of the disturbance zone. If nesting birds are found to be present, surveys will continue on a weekly basis until those within the disturbance zone or buffer area, are finished nesting. If active nests are found, clearing and construction within 300 feet of the nest (500 feet for raptors) shall be postponed or halted, at the discretion of the biologist in consultation with the California Department of Fish and Wildlife (CDFW), until the nest is vacated and juveniles have fledged, as determined by the biologist, and there is no evidence of a second attempt at nesting. Limits of construction to avoid an active nest shall be established in the field with flagging, fencing, or other appropriate barriers and construction personnel shall be instructed on the sensitivity of nest areas. The biologist shall serve as a construction monitor during those periods when construction activities will occur near active nest areas to ensure that no inadvertent impacts to these nests occur.

- No more than 72 hours prior to the start of construction activities, the project applicant shall conduct a pre-construction biological survey for special-status species determined to have potential to occur in within the Project Area (including desert tortoise). If special-status species are detected during pre-construction surveys, appropriate mitigation plans will be prepared by a qualified biologist. Additionally, a biological monitor will be present periodically during construction to ensure that impacts to special-status species do not occur and disturbance boundaries are respected.
- The applicant is required to obtain permits from the appropriate agencies as part of their project approval. To ensure that potential impacts to jurisdictional waters are addressed the project applicant shall provide evidence that all required regulatory permits have been obtained or are not required by the regulatory agencies. Required permits may include the U.S. Army Corps of Engineers Section 404 of the Clean Water Act, CDFW Section 1600 Streambed Alteration Agreement, and Regional Water Quality Control Board Section 401 certification. Regulatory permit applications would demonstrate that adequate avoidance, minimization, and if deemed necessary by the agencies, compensatory mitigation, have been provided to reduce adverse impacts to downstream biological resources. Adequate avoidance and minimization measures may include incorporation of storm-water management facilities to minimize increases in storm-water discharge rates (preferably minimizing losses to private land in Inyo County).
- Any lands acquired for mitigation should be outside of the County, to the extent feasible.

6. Cultural

- A qualified archaeologist (Project Archaeologist) shall be retained to implement a limited cultural mitigation program. An archaeological monitor and Native American monitor will be present during the initial disturbances of native soil with potential to contain cultural deposits. Cultural resource monitoring may be reduced from initial full-time monitoring to periodic spot checks, or discontinued if appropriate, once the Project Archaeologist determines that there is little or no risk to encounter cultural material. Results of this cultural monitoring program should be submitted to the County in a report, commensurate with the results of the mitigation (e.g., a letter report if negative). Should any cultural resources be encountered within the project area, monitors should be given the authority to temporarily halt or divert work from the location of the discovery in order to assess and evaluate the discovery. In the event that human remains or related cultural material are encountered, Section 15064.5(e) of CEQA requires work to be stopped and the County Coroner notified in accordance with California Health and Safety Code 7050.5

7. **Air Quality**
   - The applicant will comply with all of the District Rules as set forth by the Great Basin Unified Air Pollution Control District and obtain all necessary air quality permits.

8. **Helipad**
   - The applicant will apply for a State Heliport permit from the California State Department of Transportation-Division of Aeronautics, prior to operating a heliport at the Service Center location.
   - The applicant will obtain all necessary permits from the County Department of Public Works prior to operating a heliport at the Service Center location.
   - The applicant will obtain all necessary permits from the Federal Aviation Administration prior to operating a heliport at the Service Center location.

9. **State Highway-168**
   - The applicant will work with Cal Trans District-9 to appropriately design for a State Scenic Highway.
   - The applicant will work with Cal Trans District-9 to appropriately design for access to and from Highway-168 to and from the proposed Service Center.
   - The applicant will obtain all required permits from Cal Trans related to Highway-168 and the proposed Service Center.
   - The applicant will provide a center turn lane, west of, and a left turn lane, east of, the Service Center access, and work with as required by Cal Trans District 9.
   - The applicant will provide as part of their stormwater runoff plan, evidence that no stormwater run-off greater than what is historic, will be directed onto the State right-of-way.

10. This approval is contingent upon observance of the conditions of approval, and may be revoked for failure to comply with the conditions and/or upon the creation of a nuisance.

Exhibits

A. Vicinity Map
B. Site Map
C. Comment Letters
D. Noise and Traffic Studies
E. Draft Negative Declaration of Environmental Impact and Initial Study
F. Biological Technical Study
G. Comment Letters (CEQA).

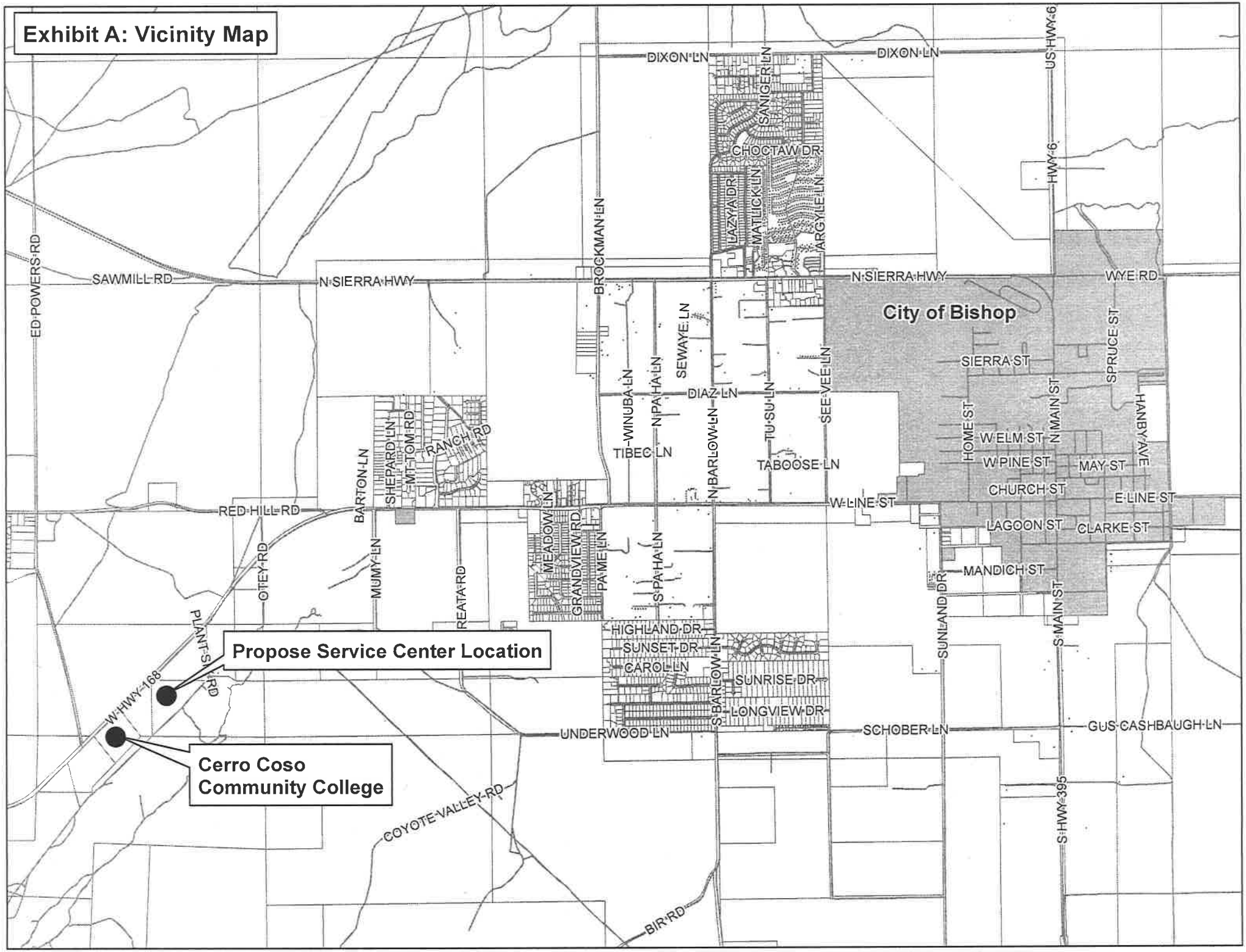
Exhibit A: Vicinity Map
DIXON LN
DIXON LN
US HWY 6
HWY 6
SANGER LN
CHOCTAW DR
LAZYA DR
MATLICK LN
ARGYLE LN
BROCKMAN LN
ED POWERS RD
SAWMILL RD
N SIERRA HWY
N SIERRA HWY
WYE RD
City of Bishop
SEWAYE LN
SIERRA ST
SPRUCE ST
WINUBA LN
N PA HA LN
DIAZ LN
SEE VEE LN
TU SU LN
N BARLOW LN
HOME ST
N MAIN ST
HANBY AVE
W ELM ST
W PINE ST
MAY ST
TIBEC LN
TABOOSE LN
CHURCH ST
E LINE ST
W LINE ST
RED HILL RD
BARTON LN
SHEPARD LN
MT TOM RD
RANCH RD
MEADOW LN
GRANDVIEW RD
PAME LN
LAGOON ST
CLARKE ST
MANDICH ST
OTEY RD
MUMY LN
REATA RD
S PA HA LN
SUNLAND DR
S MAIN ST
PLANT SITE RD
HIGHLAND DR
SUNSET DR
S BARLOW LN
CAROL LN
SUNRISE DR
LONGVIEW DR
W HWY 168
UNDERWOOD LN
SCHOBER LN
GUS CASHBAUGH LN
S HWY 395
COYOTE VALLEY RD
BIR RD
Propose Service Center Location
Cerro Coso
Community College

Exhibit B: Site Plan

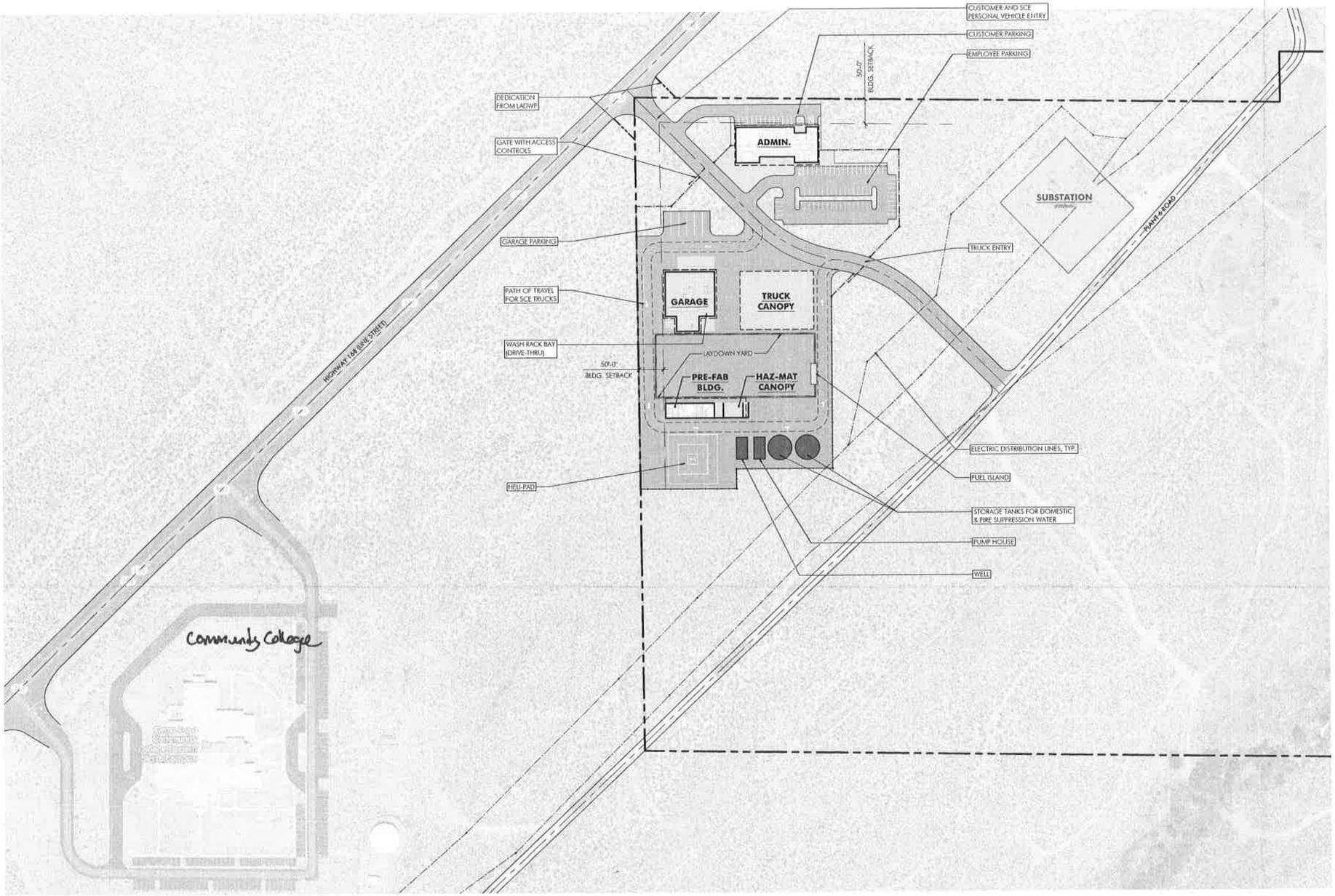

EXISTING SITE TABULATIONS:

SITE AREA TABULATIONS:	
PROPOSED LAYDOWN AREA:	2 ACRES
TOTAL PROPOSED DEVELOPED SITE AREA:	6.7 ACERS
BUILDING AREA:	
PROPOSED ADMIN. BUILDING:	10,950 SF
PROPOSED GARAGE BUILDING:	10,530 SF
PROPOSED PRE-FAB BUILDING:	3,000 SF
PROPOSED HAZ-MAT STORAGE CANOPY:	2,075 SF
PROPOSED TRUCK CANOPY:	17,755 SF
TOTAL PROPOSED BUILDING AREA:	**44,310 SF**
PARKING TABULATIONS:	
NON - SECURE CUSTOMER PARKING; STANDARD STALLS:	14 STALLS
NON - SECURE CUSTOMER PARKING; ACCESSIBLE STALLS:	2 STALL
SECURE EMPLOYEE PARKING; STANDARD STALLS:	65 STALLS
SECURE EMPLOYEE PARKING; ACCESSIBLE STALLS:	2 STALL
SECURE SCE TRUCK PARKING STALLS:	6 STALLS
TOTAL ONSITE PARKING STALLS PROVIDED:	**89 STALLS**

OPTION A: **PROPOSED SITE PLAN**

NORTH

SCALE: 1"=100'-0"

ELEMENTS ARCHITECTURE

Bishop Service Center
FEASIBILITY STUDY

JULY 24, 2013

SOUTHERN CALIFORNIA EDISON
EDISON INTERNATIONAL Company

A1

Exhibit C
Comment Letters

Cathreen Richards

From: Marvin Moskowitz
Sent: Thursday, October 24, 2013 3:36 PM
To: Cathreen Richards
Subject: CUP #2013-03/Bishop Service Center

Hi Cathreen;

Thanks for the opportunity to provide comments on this project. Our concerns:

- The proposed septic system will require a construction permit from this office. Percolation testing and profile trenches will be required.
- The proposed well will require a construction permit from this office, and construction must conform with the California Well Standards.
- It appears the water system will be a nontransient, noncommunity public water system (if they have at least 25 employees on site), which will require them to apply for a public water system permit. The water system will require the submittal of plans and specifications, and must conform to the California Water Works Standards and the California Safe Drinking Water Act. State certified water system operators will be required to operate the system.
- The project is located near the existing community college. The existing college well source is high in arsenic, uranium and fluorides and exceeds primary drinking water standards. If the well for this project is of similar quality, they will be required to provide the appropriate treatment. Conversely, if the well is of good quality, with no primary drinking water standards exceeded, we may ask them to consider "sharing" their well with the college, but that is probably getting ahead of ourselves at this point.
- Project design layout should consider the relative locations of the hazmat areas, the septic system and the well. The well should be located as far away as possible, and up-gradient, of both of these potentially contaminating activities.

That's all I got!

Marvin

DEPARTMENT OF PUBLIC WORKS

P.O. DRAWER Q – 168 NORTH EDWARDS ST.
INDEPENDENCE, CA 93526
PHONE: (760) 878-0201
FAX: (760) 878-2001

COUNTY OF **INYO**

Clint Quilter, Director Public Works
Jim Tatum, Deputy Director Public Works

January 30, 2013

TO: Cathreen Richards (Planning)

FROM: Chantel Brown (Public Works)

RE: Conditional Use Permit # 2013-03 / Bishop Service Center

The project location provided is within a State Responsibility Area for fire protection and is classified as a high hazard area.

The subject property will have to comply with the wildland/urban interface fire protection requirements, California Fire Code and current building code requirements for fire suppression.

Thank you,
Chantel Brown

DEPARTMENT OF PUBLIC WORKS
P.O. DRAWER Q
INDEPENDENCE, CALIFORNIA 93526
(760) 878-0201
(760) 878-2001 FAX

County of

INYO

TO: Cathreen Richards, Planning Dept.

FROM: Jeff Ahlstrom, Public Works J.a.

DATE: October 25, 2013

SUBJECT: Public Works Review of Conditional Use Permit (CUP) 2013-03 – Sothern Calif. Edison (SCE): Bishop Service Center Complex

---

We are in receipt of your memo dated October 10, 2013 requesting review comments from Public Works for the above noted subject project. Our office provides the following comments:

- **Traffic Study:** To address all potential project related traffic impacts onto Highway 168 and Ed Powers Road.

- **Water Quality Impacts for Project Storm Water Runoff:** Project will have paved parking lots for public vehicle parking, maintenance vehicles, vehicle repair facilities, and contaminated materials and other material storage areas. Applicant needs to provide project information regarding containment and/or treatment of storm water runoff prior to allowing it drain off-site.

- **Potential for damage to Ed Powers Road from increased Truck Traffic ingress/egress of Highway 395:** This project will now stage SCE material delivery and maintenance trucks at the proposed project site. In addition to using State Highway 168 for southbound work activities, SCE trucks will also be using Ed Powers Road for access to State Highway 395. Accelerated roadway fatigue impacts will now be occur on this county maintained road. Mitigation for this impact needs to be addressed.

Cathreen Richards

From: Fox, Timothy H CIV NAVFAC SW, OPDK3/242 <timothy.h.fox@navy.mil>
Sent: Tuesday, August 19, 2014 9:02 AM
To: Cathreen Richards
Subject: RE: Conditional Use Permit for Edison Service Center near Cerro Coso Community College
Signed By: timothy.h.fox@navy.mil

Cathreen,

We have reviewed this SCE service center project for potential conflicts with military air operations. Bishop is outside the R-2508 Airspace Complex and is not near Military Training Routes. We have no issues with this project.

Thank you for the opportunity to review this CUP.

V/R,

Tim Fox, CPLO
NAWS China Lake
429 E. Bowen Rd. Stop 4001
China Lake, CA 93555
(760)939-9438

-----Original Message-----
From: Cathreen Richards [mailto:crichards@inyocounty.us]
Sent: Monday, August 18, 2014 3:37 PM
To: Fox, Timothy H CIV NAVFAC SW, OPDK3/242
Subject: Conditional Use Permit for Edison Service Center near Cerro Coso Community College

Hi Tim,

Southern California Edison has applied for a Conditional Use Permit to build a full service operations center on property they own near Cerro Coso Community College. This project includes the use of helicopters and a helipad. I have attached the Draft Mitigated Negative Declaration of Environmental Impact and Checklist for your information and use.

Exhibit D
Noise and Traffic Studies

DUDEK

MEMORANDUM

To:	Scott Holland, Elements Architecture
From:	Mike Greene, Dudek
Subject:	Southern California Edison (SCE) Bishop Service Center - Noise
Date:	July 16, 2014
cc:	Brian Grover, Dudek

1.0 PURPOSE

In response to the November 4, 2013 request (RE: Incomplete Application – Southern California Edison, Bishop Service Center, Conditional Use Permit (CUP) # 2013-03) from the Inyo County Planning Department, we have assessed potential noise effects from the proposed SCE Bishop Service Center project (project), specifically in regards to use of the proposed helipad and the maintenance garage operations.

2.0 PROJECT LOCATION AND DESCRIPTION

The proposed project is located south of Highway 168, approximately 0.4 miles north of Ed Powers Road, in Inyo County, approximately 3.5 miles west of Bishop. The surrounding area is primarily open space. The nearest noise-sensitive land use is the Cerro Coso Community College Eastern Sierra Campus, which is located approximately 1,100 feet to the southwest of the proposed helipad and approximately 1,300 feet southwest of the proposed maintenance garage. The nearest residential land use is located approximately 4,200 feet (0.8 mile) to the northwest.

SCE is proposing to build a new service center, which will contain a customer service building, equipment storage buildings and laydown yard, access road, and parking lots on an approximately 6-acre area within an 82-acre parcel. Off-site improvements will also include installation of a well and two new water lines.

3.0 ANALYSIS OF PROJECT OPERATIONS

3.1 Helipad

According to the District Manager at the current Bishop Service Center, the helipad at the new Service Center would be used on average one time per week. The helicopters are primarily used for patrolling SCE's transmission and distribution lines, especially in remote areas such as Inyo County. The helicopters are also used for setting poles and towers in remote areas.

Helicopters currently in the SCE fleet of helicopters for daily operation consist of the EC 135 P2+ and the A/S 350 B. A Bell 205 A++ helicopter is a planned addition to the fleet. Typical flight operations as they pertain to the project's helipad would consist of a helicopter arrival in order to pick up a line inspector, during which time the helicopter may idle on the pad for up to 10 to 15 minutes, and a departure. The helicopter would avoid flying directly overhead noise-sensitive uses to the extent practicable during such operations, and would typically not be in the local airspace for more than a few minutes. The normalized 1-second Sound Exposure Level (SEL) of the helicopters utilized for line inspections typically range from approximately 76 to 83 dBA at a distance of 500 feet, and maximum noise levels range from approximately 88 to 95 dBA at 50 feet (SDG&E 2014). Because of the relatively infrequent occurrence (typically one per week) of helicopter usage of the helipad and the distances to the nearest noise-sensitive receivers, noise levels at noise-sensitive receivers would not exceed relevant local, State or federal standards and would not result in undue annoyance.

3.2 Maintenance Garage

The project would include a garage within which the repair and maintenance of all local SCE vehicles would take place. Typical activities would include routine maintenance items such as lube, oil and filter replacements, inspection of vehicles, and washing. The garage would have service lifts and pneumatically operated tools. All work would be performed inside the Garage Building, and compressors would be housed within a separate room which would be fully enclosed to ensure that noise is kept to a minimum. The garage mechanics would work from 3:00 PM to 12:00 AM Monday through Thursday and from 12:00 PM to 9:00 PM on Fridays.

Noise from the maintenance garage was estimated using the Federal Transit Administration's noise model for General Transit Noise Assessment. The noise model contains a variety of noise source emissions level inputs including one for a Bus Operations/Maintenance Facility. Assuming that 5 vehicles per hour are serviced, the noise from the facility would result in a noise level of 35 dBA L_{eq} at the nearest noise-sensitive land use (the community college), which would

be well below the ambient noise levels and would not be audible within the classrooms or offices.

4.0 REFERENCES

SDG&E (San Diego Gas & Electric). 2014. *Administrative Draft EIR / EIS for the Master Special Use Permit and Permit to Construct Power Line Replacement Projects*. July.

DUDEK

MEMORANDUM

To:	Scott Holland, Elements Architecture
From:	Brian Grover, Dudek
Subject:	Southern California Edison (SCE) Bishop Service Center - Traffic
Date:	July 16, 2014

1.0 PURPOSE

In response to the November 4, 2013 request (RE: Incomplete Application – Southern California Edison, Bishop Service Center, Conditional Use Permit (CUP) # 2013-03) from the Inyo County Planning Department, we have assessed potential traffic impacts from the proposed SCE Bishop Service Center project (project), specifically in regards to the potential traffic impacts on roadway segments (Highway 168 and Ed Powers Road) from both construction and operational traffic.

2.0 PROJECT LOCATION AND DESCRIPTION

The proposed project is located south of Highway 168, approximately 0.4 miles north of Ed Powers Road, in Inyo County, approximately 3.5 miles west of Bishop. The surrounding area is primarily open space.

SCE is proposing to build a new service center, which will contain a customer service building, equipment storage buildings and laydown yard, access road, and parking lots on an approximately 6-acre area within an 82-acre parcel. Off-site improvements will also include installation of a well and two new water lines.

3.0 METHODOLOGY

The traffic analysis in this memorandum was performed in accordance with the California Environmental Quality Act (CEQA) and uses information from the Highway Capacity Manual and the California Department of Transportation (Caltrans). For the purposes of this memorandum, a roadway segment analysis was completed for two roads: State Route 168 (SR-168) and Ed Powers Road. Due to the relatively small scale of the project and the minimal traffic

added to the existing roadways as a result of the project, an intersection analysis was not required.

The roadway segment analysis is based upon the comparison of average daily traffic volumes (ADTs) to the roadway classification design capacity. Observed peak hour traffic volumes were used to determine the ADT for the roadway segments evaluated in this memorandum. The comparison of ADT to roadway capacity provides a volume to capacity (V/C) ratio that is used to determine the roadway segment Level of Service (LOS). The applicable regulations that govern the acceptable LOS are then applied to determine if any roadway segment impacts would occur as a result of the project.

3.1 Level of Service

Roadway operations are measured in terms of LOS. Level of Service is a qualitative measure describing operational conditions within a traffic stream, based on service measures such as speed and travel time, freedom to maneuver, traffic interruptions, comfort, and convenience. LOS is defined for each type of facility that has analysis procedures available in the Highway Capacity Manual. Letters designate each LOS from A to F, with LOS A representing the best operating conditions and LOS F representing the worst. Table 1, Highway Level of Service Criteria, defines the LOS for roadway segments including segments of highway, which are typical of the facilities within Inyo County and evaluated in this memorandum (Inyo County 2009).

Table 1
Highway Level of Service (LOS) Criteria

Level of Service	Description	Delay	Maximum Vehicle to Capacity Ratio
A	Free flow. Users are unaffected by other traffic; freedom of speed and movement, level of comfort, convenience and safety are excellent.	Little or no delay	0.29
B	Stable flow. Users begin to notice other traffic; freedom of speed continues, but freedom to maneuver declines slightly.	Short traffic delays	0.47
C	Stable flow. Traffic may back up behind turning vehicles. Most drivers feel somewhat restricted. Traffic signals operate at maximum efficiency.	Average traffic delays	0.68
D	Approaching unstable flow. Maneuverability is severely limited during short periods when traffic backs up temporarily. Comfort, convenience, and safety are affected. Users wait one signal cycle to pass through a signalized intersection.	Long traffic delays	0.88
E	Unstable flow. Traffic volumes are at or near capacity; users wait several cycles to pass through a signalized intersection.	Very long traffic delays	1.0

F	Forced flow. Traffic volumes exceed the capacity of the street and traffic queues develop. Stop-and-go traffic conditions predominate.	Excessive delay	≥1.0

Source: Transportation Research Board 2000; Caltrans 2002.

3.2 Threshold of Significance

The goals and policies of the Inyo County General Plan (Inyo County 2001) Circulation Element contain the LOS threshold of significance relevant to transportation and traffic for the project and are listed below:

- Goal RH-1: A transportation system that is safe, efficient, and comfortable, which meets the needs of people and goods and enhances the lifestyle of the County's residents.
    - Policy RH-1.4, Level of Service: Maintain a minimum level of service (LOS) "C" on all roadways in the County. For highways within the County, LOS "C" should be maintained except where roadway expansions or reconfigurations will adversely impact the small community character and economic viability of designated Central Business Districts.

3.3 Study Scenarios

The two study scenarios, Existing Conditions and Existing Plus Project Conditions, which are evaluated in this memorandum for traffic impacts are described below.

Existing Conditions: The Existing Conditions of the roadway segments evaluated in this traffic memorandum are evaluated and used to establish the existing baseline traffic operations within the study area before the project.

Existing Plus Project Conditions: The Existing Plus Project Conditions represents the existing transportation network with the addition of traffic from the project. This study scenario includes both an analysis of the roadways segments with the addition of traffic generated during construction of the project and an evaluation of these roadway segments with the addition of operational traffic generated by the project after construction is complete.

4.0 EXISTING CONDITIONS

This section of the traffic study is intended to assess the existing conditions of the roadways and intersections within the vicinity of the project to determine travel flow and/or delay difficulties, if any, that exist prior to adding the traffic generated by the project.

4.1 Roadway Segments

The roadway segments analyzed in this memorandum for potential traffic impacts as a result the project are described below.

SR-168: SR-168 originates near the 9,000-foot elevation of Lake Sabrina in the Inyo National Forest. From this southernmost terminus, SR-168 travels generally northeast through the Sierras for approximately 10 miles. At this location the roadway is two lanes with long, steep grades. During the winter, the higher elevations of the road receive considerable snowfall, but the road is kept open between Aspendell and Bishop. Near Bishop and the project site, the roadway is two lanes with a continuous two-way left-turn lane. SR-168 then travels northeast where it connects with US-395. It continues northeast from Big Pine to Mono County and Nevada (Inyo County Local Transportation Commission 2009). SR-168 in the vicinity of the project site is described as a rural major collector and this analysis assumes a capacity of 10,000 ADT (Caltrans 2011 & SANTEC/ITE 2000).

Ed Powers Road: Ed Powers Road is a two lane rural road that is approximately 2.7 miles long and terminates at US-395 at its northernmost point and at SR-168 at its southernmost point. The roadway is typically used as a connection between US-395 and SR-168 with few intersecting roads between. Ed Powers Road is designated as a rural minor collector roadway and this analysis assumes a capacity of 8,000 ADT (Caltrans 2011& SANTEC/ITE 2000).

4.2 Existing Traffic

To determine the existing roadway segment operating conditions, traffic counts were conducted for the weekday a.m. peak hour. The peak hour roadway segment volumes were counted for both SR-168 and Ed Powers Roads from 7:30 am to 8:30 am in May 2014. These peak hour volumes were then converted into ADT using the methodology in the Highway Capacity Manual for rural highways (Transportation Research Board 2000). Table 2, Existing Conditions, shows the ADT for SR-168 and Ed Power Road and the resulting LOS for these roads under existing conditions.

Table 2
Existing Conditions

Roadway Segment	Capacity (ADT)	Volume (ADT)	V/C	LOS
SR-168	10,000	800	0.08	A
Ed Powers Road	8,000	90	0.01	A

Source: Transportation Research Board 2000; Caltrans 2002.

5.0 PROJECT TRAFFIC

5.1 Project Trip Generation

Construction Traffic

The construction traffic that would occur during construction of the project was estimated based on the construction of similar service centers and modified for the project as appropriate. It was determined that the maximum amount of traffic that would occur during construction of the project would be 50 ADT. Construction would occur Monday through Friday from 7:00 am to 5:00 pm and is estimated to begin September 2014 and end August 2015.

Operational Traffic

The operational traffic resulting from the project was determined based on previous information for similar service centers and modified for the project as appropriate. It was determined that approximately 93 ADT would result from employees at the project including all SCE departments, vendor deliveries, fuel deliveries, and SCE contractors. Additionally, 70 ADT from customers traveling to and from the project were estimated to occur for a total estimated project ADT of 163. This operational traffic is estimated to begin after construction of the service center is completed in August 2015.

5.2 Project Trip Distribution

The traffic generated by the project during both construction and operations was assumed to travel from US-395 to SR-168 using Ed Powers Road in order to access the project site. As a conservative assumption the traffic generated during both construction and operations of the project was assumed to follow this route in order to analyze the maximum possible traffic additions to these roadways segments as a result of the project.

6.0 EXISTING PLUS PROJECT CONDITIONS

6.1 Project Construction

During construction of the project approximately 50 ADT would be added to the existing roadways along SR-168 and Ed Powers Road. Table 3, Existing Plus Project Conditions – Construction, shows the ADT of SR-168 and Ed Powers Road during construction of the project and the resulting LOS.

Table 3
Existing Plus Project Conditions - Construction

Roadway Segment	Capacity (ADT)	Volume (ADT)	V/C	LOS
SR-168	10,000	850	0.09	A
Ed Powers Road	8,000	140	0.02	A

Source: Transportation Research Board 2000; Caltrans 2002.

As depicted in Table 3, the addition of project traffic during construction would not result in a change to LOS D or worse for either SR-168 or Ed Powers Road. Therefore, traffic-related impacts would be less than significant as a result of the project during construction.

6.2 Project Operations

After construction of the project is completed and the service center begins operation, an estimated 163 ADT would be added to the existing roadways along SR-168 and Ed Powers Road. Table 4, Existing Plus Project Conditions – Operation, shows the ADT of SR-168 and Ed Powers Road during operation of the project and the resulting LOS.

Table 4
Existing Plus Project Conditions - Operation

Roadway Segment	Capacity (ADT)	Volume (ADT)	V/C	LOS
SR-168	10,000	963	0.10	A
Ed Powers Road	8,000	253	0.03	A

Source: Transportation Research Board 2000; Caltrans 2002.

As depicted in Table 4, the addition of project traffic during operations would not result in a change to LOS C or worse for either SR-168 or Ed Powers Road. Therefore, traffic-related impacts would be less than significant as a result of the project during operations.

6.3 Mitigation Measures

As previously discussed, no significant traffic-related impacts would result from the project; and therefore, no mitigation measures would be necessary.

7.0 REFERENCES

Caltrans (California Department of Transportation). 2002. *Guide for the Preparation of Traffic Impact Studies*. December 2002. Accessed at: http://www.dot.ca.gov/hq/tpp/offices/ocp/igr_ceqa_files/tisguide.pdf.

Caltrans. 2011. Inyo California Road System: Functional Classification System. August 5, 2011. http://www.dot.ca.gov/hq/tsip/hseb/crs_map/13m21.pdf.

Inyo County. 2001. *Inyo County General Plan Circulation Element*. December 11, 2001. Accessed at: http://inyoplanning.org/general_plan/goals/ch7.pdf.

Inyo County. 2009. *Inyo County Regional Transportation Plan*. April 22, 2009. Prepared by Fehr & Peers. Accessed at: http://www.inyoltc.org/rtp.html.

San Diego Traffic Engineers Council (SANTEC) and Institute of Transportation Engineers (ITE). 2000. Guidelines for Traffic Impact Studies in the San Diego Region. March 2, 2000.

Transportation Research Board. 2000. *Highway Capacity Manual*. Accessed at: http://sjnavarro.files.wordpress.com/2008/08/highway_capacital_manual.pdf.

Exhibit E
Draft Negative Declaration of Environmental Impact and Initial Study

Planning Department
168 North Edwards Street
Post Office Drawer L
Independence, California 93526

Phone: (760) 878-0263
FAX: (760) 878-0382
E-Mail: inyoplanning@inyocounty.us

DRAFT MITIGATED NEGATIVE DECLARATION OF ENVIRONMENTAL IMPACT AND INITIAL STUDY

PROJECT TITLE: Conditional Use Permit 2013-03/Southern California Edison (SCE) Bishop Service Center with fence height variance.

PROJECT LOCATION: Along Highway-168 west of Bishop, CA, on property currently owned by SCE - Assessor Parcel #012-080-15.

PROJECT DESCRIPTION: The applicant, SCE, is proposing to build a full service, operations center on property located west of Bishop, CA, on an approximate 7-acre area within an 82-acre parcel and close the existing facilities located in the City of Bishop. The project will include: a new office building with a customer service center, garage, shop, laydown yard, and truck canopy buildings. SCE also proposes to construct and operate a helipad on the site and the project will require the installation of two new wells and two new water lines. SCE owns the property on which the proposed project will be sited and currently operates a hydroelectric facility (the Mt. Tom substation) on the site. The parcel has been previously disturbed by the substation operations and there are dirt roads and power lines crossing it on numerous locations.

MITIGATION MEASURES:
I (a-b): To ensure that the project does not have a negative impact on the scenic views from the highway, the applicant will be required to use a color pallet that blends with the surrounding landscape and to plant trees as appropriate to screen it.
I (d): Implementation of the County's light requirements per General Plan Policy VIS-1.6 'Control of Light and Glare' will be required and will reduce the potential impact from the project's lighting to a level of less than significant.
IV (a): A weed abatement and control plan will be required of the applicant prior to the issuance of any grading permits to serve as mitigation for the project resulting in impacts associated with the introduction of invasive weeds to less than significant.
To ensure that potential impacts to species are addressed mitigation measures include: within 7 days of ground-disturbing activities associated with construction or grading that would occur during the nesting/breeding season of native bird species potentially nesting on the site (typically February through August in the Project region, or as determined by a qualified biologist), the applicant shall have a single pre-construction survey conducted by a qualified biologist to determine if active nests of bird species protected by the Migratory Bird Treaty Act and/or the California Fish and Game Code are present in the disturbance zone or within 300 feet (500 feet for raptors) of the disturbance zone. If nesting birds are found to be present, surveys will continue on a weekly basis until those within the disturbance zone or buffer area are finished nesting. If active nests are found, clearing and construction within 300 feet of the nest (500 feet for raptors) shall be postponed or halted, at the discretion of the biologist in consultation with the California Department of Fish and Wildlife (CDFW), until

the nest is vacated and juveniles have fledged, as determined by the biologist, and there is no evidence of a second attempt at nesting. Limits of construction to avoid an active nest shall be established in the field with flagging, fencing, or other appropriate barriers and construction personnel shall be instructed on the sensitivity of nest areas. The biologist shall serve as a construction monitor during those periods when construction activities will occur near active nest areas to ensure that no inadvertent impacts to these nests occur.
IV (b): To ensure that potential impacts to jurisdictional waters are addressed the project applicant shall provide evidence that all required regulatory permits have been obtained or are not required by the regulatory agencies. Required permits may include the U.S. Army Corps of Engineers Section 404 of the Clean Water Act, CDFW Section 1600 Streambed Alteration Agreement, and Regional Water Quality Control Board Section 401 certification. Regulatory permit applications would demonstrate that adequate avoidance, minimization, and if deemed necessary by the agencies, compensatory mitigation, have been provided to reduce adverse impacts to downstream biological resources. Adequate avoidance and minimization measures may include incorporation of storm-water management facilities to minimize increases in storm-water discharge rates (preferably minimizing losses to private land in Inyo County).
V (a-d): An archaeological monitor and Native American monitor will be present during the initial disturbances of native soil with potential to contain cultural deposits. Cultural resource monitoring may be reduced from initial full-time monitoring to periodic spot checks, or discontinued if appropriate, once the Project Archaeologist determines that there is little or no risk to encounter cultural material. Results of this cultural monitoring program should be submitted to the County in report, commensurate with the results of the mitigation (e.g., a letter report if negative). Should any cultural resources be encountered within the project area, monitors should be given the authority to temporarily halt or divert work from the location of the discovery in order to assess and evaluate the discovery. In the event that human remains or related cultural material are encountered, Section 15064.5(e) of CEQA requires work to be stopped and the County Coroner notified in accordance with California Health and Safety Code 7050.5

FINDINGS:

An Initial Study and Evaluation of Potential Impacts has been prepared by the Planning Department (attached). Staff finds that the proposed project will **NOT** have a significant adverse impact on the environment for the following reasons:

A. The proposed project is consistent with goals and objectives of the Inyo County General Plan designation of Rural Protection (RP) as 'conditioned' if approved.

B. The proposed project is consistent with the provisions of the Inyo County Zoning Ordinance designation of Open Space with a forty acre minimum (OS-40) as 'conditioned' if approved.

C. Based on the information submitted by the applicant, the project could have the potential to create a significant adverse impact on **AESTHETICS, BIOLOGICAL, CULTURAL, AND HYDROLOGY RESOURCES**. However, with the incorporation of the mitigation measures recommended below, it has been found that the project will not result in a significant adverse impact.

D. Based upon the environmental evaluation of the proposed project, the Planning Department finds that the project does not have the potential to create a significant adverse impact on flora or fauna; natural, scenic and historic resources; the local economy; public health, safety, and welfare. This constitutes a Negative Finding for the Mandatory Findings required by Section 15065 of the CEQA Guidelines.

The 30-day review period for this Negative Declaration expires on **September 16, 2014**. Inyo County is not required to respond to any comments received after this date.

Additional information is available from the Inyo County Planning Department. Please contact Project Planner Cathreen Richards at 760-878-0263, if you have any questions regarding this project.

Josh Hart, AICP
Director, Inyo County Planning Department

8/15/14
Date

INYO COUNTY PLANNING DEPARTMENT

CEQA APPENDIX G: INITIAL STUDY & ENVIRONMENTAL CHECKLIST FORM

EVALUATION OF ENVIRONMENTAL IMPACTS:

1) A brief explanation is required for all answers except "No Impact" answers that are adequately supported by the information sources a lead agency cites in the parentheses following each question. A "No Impact" answer is adequately supported if the referenced information sources show that the impact simply does not apply to projects like the one involved (e.g., the project falls outside a fault rupture zone). A "No Impact" answer should be explained where it is based on project-specific factors as well as general standards (e.g., the project will not expose sensitive receptors to pollutants, based on a project-specific screening analysis).

2) All answers must take account of the whole action involved, including off-site as well as on-site, cumulative as well as project-level, indirect as well as direct, and construction as well as operational impacts.

3) Once the lead agency has determined that a particular physical impact may occur, then the checklist answers must indicate whether the impact is potentially significant, less than significant with mitigation, or less than significant. "Potentially Significant Impact" is appropriate if there is substantial evidence that an effect may be significant. If there are one or more "Potentially Significant Impact" entries when the determination is made, an EIR is required.

4) "Negative Declaration: Less Than Significant With Mitigation Incorporated" applies where the incorporation of mitigation measures has reduced an effect from "Potentially Significant Impact" to a "Less Than Significant Impact." The lead agency must describe the mitigation measures, and briefly explain how they reduce the effect to a less than significant level (mitigation measures from Section XVII, "Earlier Analyses," may be cross-referenced).

5) Earlier analyses may be used where, pursuant to the tiering, program EIR, or other CEQA process, an effect has been adequately analyzed in an earlier EIR or negative declaration. Section 15063(c)(3)(D). In this case, a brief discussion should identify the following:

a) Earlier Analysis Used. Identify and state where they are available for review.

b) Impacts Adequately Addressed. Identify which effects from the above checklist were within the scope of and adequately analyzed in an earlier document pursuant to applicable legal standards, and state whether such effects were addressed by mitigation measures based on the earlier analysis.

c) Mitigation Measures. For effects that are "Less than Significant with Mitigation Measures Incorporated," describe the mitigation measures which were incorporated or refined from the earlier document and the extent to which they address site-specific conditions for the project.

6) Lead agencies are encouraged to incorporate into the checklist references to information sources for potential impacts (e.g., general plans, zoning ordinances). Reference to a previously prepared or outside

document should, where appropriate, include a reference to the page or pages where the statement is substantiated.

7) Supporting Information Sources: A source list should be attached, and other sources used or individuals contacted should be cited in the discussion.

8) This is only a suggested form, and lead agencies are free to use different formats; however, lead agencies should normally address the questions from this checklist that are relevant to a project's environmental effects in whatever format is selected.

9) The explanation of each issue should identify:
a) the significance criteria or threshold, if any, used to evaluate each question; and
b) the mitigation measure identified, if any, to reduce the impact to less than significance issues.

Planning Department
168 North Edwards Street
Post Office Drawer L
Independence, California 93526

Phone: (760) 878-0263
FAX: (760) 878-0382
E-Mail: inyoplanning@Inyocounty.us

INYO COUNTY PLANNING DEPARTMENT

APPENDIX G: CEQA INITIAL STUDY & ENVIRONMENTAL CHECKLIST FORM

1. **Project title: Conditional Use Permit # 2013-03/Southern California Edison**

2. **Lead agency name and address:** Inyo County Planning Department.

3. **Contact person and phone number:** Cathreen Richards, Senior Planner, (760) 878-0263

4. **Project location:** Along Highway-168 west of Bishop, CA, on property currently owned by SCE - Assessor Parcel #012-080-15 (Exhibit A: Vicinity Map).

5. **Project sponsor's name and address:** Southern California Edison (SCE), 2244 Walnut Grove Avenue, Rosemead, Ca 91770.

6. **General Plan designation:** Rural Protection (RP)

7. **Zoning:** Open Space with a forty-acre minimum (OS-40)

8. **Description of project**: The applicant is proposing to build a full service, operations center on property located west of Bishop, CA, on an approximate 7-acre area within an 82-acre parcel and close existing facilities located in the City of Bishop. The project will include: a new office building with a customer service center; a garage, shop, and laydown yard; hazardous material canopy; parking areas for customers, employees, and the service fleet (a total of 99 stalls); and truck parking canopy buildings. The total building area will be 32,555-square-feet and the total developed area of the site will be 291,852-square-feet (Exhibit B: Site Plan). All of the buildings will be constructed from pre-fabricated metal and be one-story in height. The applicant is asking for a fence height variance for up to 8-feet for security and safety. SCE also proposes to construct and operate a helipad on the site and the project will require the installation of two new wells and two new water lines. SCE owns the property on which the proposed project will be sited and currently operates a hydroelectric facility (the Mt. Tom substation) on the site. The parcel has been previously disturbed by the substation operations and there are dirt roads and power lines crossing it on numerous locations. Construction is planned to take place from Fall-2014 through Fall-2015. The new operations center will take the place of two smaller facilities SCE is currently using: a customer service center (office building) on 1.4-acres on Lagoon Street in the City of Bishop and a 2.6-acre Lay Down area, leased from the Los Angeles Department of Water and Power, also on Lagoon Street in the City of Bishop. SCE does not anticipate that there will be an increase in activities that would exceed what is currently being handed by the existing facilities.

9. **Surrounding land uses and setting:** The proposed project is located alongside Highway-168, west of Bishop California. Highway-168 runs west from the City of Bishop to Lake Sabrina and offers views of the

Sierra Nevada and a high desert landscape. Most of the surrounding area is vacant with a Community College located just to the west of the project. The project site currently has a hydroelectric substation located on it (Mt. Tom Substation) as well as dirt roads and utility lines. The substation will remain on the property.

Location:	Use:	Gen. Plan Designation	Zoning
Site	Hydro-electric substation	Rural Protection (RP)	Open Space with a forty acre minimum (OS-40)
North	Highway-168 and vacant land	Natural Resource (NR)	Open Space with a forty acre minimum (OS-40)
East	Vacant land	Natural Resource (NR)	Open Space with a forty acre minimum (OS-40)
South	Vacant land	Rural Protection (RP)	Open Space with a forty acre minimum (OS-40)
West	Vacant land	Natural Resource (NR)	Open Space with a forty acre minimum (OS-40)

10. **Other public agencies whose approval is required**: California Department of Transportation, California Department of Fish and Wildlife, Lahonton Regional Water Quality Board, Great Basin Unified Air Pollution Control District, Army Corp of Engineers, Inyo County Environmental Health Department, Inyo County Public Works Department, the Inyo Local Agency Formation Commission.

ENVIRONMENTAL FACTORS POTENTIALLY AFFECTED:
The environmental factors checked below would be potentially affected by this project, involving at least one impact that is a "Potentially Significant Impact" as indicated by the checklist on the following pages.

☒ Aesthetics Resources	☐ Agriculture & Forestry	☐ Air Quality
☒ Biological Resources	☒ Cultural Resources	☐ Geology /Soils
☐ Hazards & Hazardous Materials	☒ Hydrology / Water Quality	☐ Land Use / Planning
☐ Mineral Resources	☐ Noise	☐ Population / Housing
☐ Public Services	☐ Recreation	☐ Transportation/Traffic
☐ Greenhouse Gas Emissions	☐ Utilities/Service Systems	☐ Mandatory Findings of Significance

DETERMINATION: (To be completed by the Lead Agency)

On the basis of this initial evaluation:

☐ I find that the proposed project COULD NOT have a significant effect on the environment, and a NEGATIVE DECLARATION will be prepared.

☒ I find that although the proposed project could have a significant effect on the environment, there will not be a significant effect in this case because revisions in the project have been made by or agreed to by the project proponent. A MITIGATED NEGATIVE DECLARATION will be prepared.

☐ I find that the proposed project MAY have a significant effect on the environment, and an ENVIRONMENTAL IMPACT REPORT is required.

☐ I find that the proposed project MAY have a "potentially significant impact" or "potentially significant unless mitigated" impact on the environment, but at least one effect 1) has been adequately analyzed in an earlier document pursuant to applicable legal standards, and 2) has been addressed by mitigation measures based on the earlier analysis as described on attached sheets. An ENVIRONMENTAL IMPACT REPORT is required, but it must analyze only the effects that remain to be addressed.

☐ I find that although the proposed project could have a significant effect on the environment, because all potentially significant effects (a) have been analyzed adequately in an earlier EIR or NEGATIVE DECLARATION pursuant to applicable standards, and (b) have been avoided or mitigated pursuant to that earlier EIR or NEGATIVE DECLARATION, including revisions or mitigation measures that are imposed upon the proposed project, nothing further is required.

8/15/14
Date

Inyo County Planning Department

INYO COUNTY PLANNING DEPARTMENT
ENVIRONMENTAL CHECKLIST FORM

	Potentially Significant Impact	Less Than Significant With Mitigation Incorporation	Less Than Significant Impact	No Impact
I. AESTHETICS -- Would the project:				
a) Have a substantial adverse effect on a scenic vista?	☐	☒	☐	☐
The location of the proposed service center could impact the views from Highway-168 to the sierra. The proposed project, however, is located between areas that are already developed and would essentially fill in part of the gap. To the east there is residential and commercial development along Highway-168, to the west is Cerro Coso Community College. The proposed project has a low profile (one story) that matches both the residential and commercial development to the east and the Community College to the west. To ensure that the project does not have a negative impact on the scenic views from the highway, the applicant will be required to use a color pallet that blends with the surrounding landscape and to plant trees as appropriate to screen it. The proper use of color and screening will serve as mitigation for the project.				
b) Substantially damage scenic resources, including, but not limited to, trees, rock outcroppings, and historic buildings within a state scenic highway?	☐	☒	☐	☐
The location of the proposed service center is located alongside a State Scenic Highway (Highway 168) and has the potential to impact scenic vistas from it. The proposed project has low profile (one story) that matches both the residential and commercial development to the east and the Community College to the west. To ensure that the project does not have a negative impact on the scenic views from the highway, the applicant will be required to use a color pallet that blends with the surrounding landscape and to plant trees as appropriate to screen it. The proper use of color and screening will serve as mitigation for the project.				
c) Substantially degrade the existing visual character or quality of the site and its surroundings?	☐	☐	☐	☒
The site of the proposed project and its immediate surroundings will not degrade the existing visual character or quality of the site as it currently houses a hydro-electric facility and there are power lines running across it.				
d) Create a new source of substantial light or glare which would adversely affect day or nighttime views in the area?	☐	☒	☐	☐
The proposed project includes nighttime operations that would require lighting and night time lighting of the grounds for safety and security. Implementation of the County's light requirements per General Plan Policy VIS-1.6 'Control of Light and Glare' will be required and will reduce the potential impact from the project's lighting to a level of less than significant.				

II. AGRICULTURE AND FOREST RESOURCES: In determining whether impacts to agricultural resources are significant environmental effects, lead agencies may refer to the California Agricultural Land Evaluation and Site Assessment Model (1997) prepared by the California Dept. of Conservation as an optional model to use in assessing impacts on agriculture and farmland. In determining whether impacts to forest resources, including timberland, are significant environmental effects, lead agencies may refer to information compiled by the California Department of Forestry and Fire Protection regarding the state's inventory of forest land, including The Forest and Range Assessment Project and the Forest Legacy Assessment Project; and forest carbon measurement methodology Provided in Forest Protocols adopted by the California Air Resources Board.

	Potentially Significant Impact	Less Than Significant With Mitigation Incorporation	Less Than Significant Impact	No Impact
Would the project:				
a) Convert Prime Farmland, Unique Farmland, or Farmland of Statewide Importance (Farmland), as shown on the maps prepared pursuant to the Farmland Mapping and Monitoring Program of the California Resources Agency, to non-agricultural use?	☐	☐	☐	☒
No, the location of the proposed project is not on farmland and will not convert an agriculture use to a non-agricultural use.				
b) Conflict with existing zoning for agricultural use, or a Williamson Act contract?	☐	☐	☐	☒
No, the location of the proposed project is not on land that is zoned for agricultural use; there are no Williamson Act Contracts in Inyo County.				
c) Conflict with existing zoning for, or cause rezoning of, forest land (as defined in Public Resources Code section 12220(g)), timberland (as defined by Public Resources Code section 4526), or timberland zoned Timberland Production (as defined by Government Code Section 51104(g))?	☐	☐	☐	☒
No, the location of the proposed project does not include forest land or timber land.				
d) Result in the loss of forest land or conversion of forest land to non-forest use?	☐	☐	☐	☒
No, the location of the proposed project does not include forest land.				
e) Involve other changes in the existing environment which, due to their location or nature, could result in conversion of Farmland, to non-agricultural use or conversion of forest land to non-forest use?	☐	☐	☐	☒
No, the location of the proposed project does not include farm or forest land.				
III. AIR QUALITY: Where available, the significance criteria established by the applicable air quality management or air pollution control district may be relied upon to make the following determinations. Would the project:				
a) Conflict with or obstruct implementation of the applicable air quality plan?	☐	☐	☐	☒
No. Although there are portions of Inyo County within non-attainment areas for Federal and State PM10 (particulate matter 10 microns or less in diameter) ambient air quality standards, the primary source for this pollution is the Owens dry lake, located approx. 60-miles from the project site. As a result of this distance, the project will not increase PM10 pollutants over existing levels, and the project will have a less than significant impact on PM10 levels. The applicant will also be subject to the Great Basin Unified Air Pollution Control District and County building and safety regulations regarding dust mitigation during construction.				
b) Violate any air quality standard or contribute substantially to an existing or projected air quality violation?	☐	☐	☐	☒
No. Although there are portions of Inyo County within non-attainment areas for Federal and State PM10 (particulate matter 10 microns or less in diameter) ambient air quality standards, the primary source for this pollution is the Owens dry lake, located approx. 60-miles from the project site. As a result of this distance, the project will not increase PM10 pollutants over existing levels, and the project will have a less than significant impact on PM10 levels. There could be reduced air quality during construction, but				

	Potentially Significant Impact	Less Than Significant With Mitigation Incorporation	Less Than Significant Impact	No Impact

these air quality changes would be temporary in nature and not significant. The applicant would also be subject to Great Basin Unified Air Pollution Control District County building and safety regulations regarding dust mitigation during construction.

c) Result in a cumulatively considerable net increase of any criteria pollutant for which the project region is non-attainment under an applicable federal or state ambient air quality standard (including releasing emissions which exceed quantitative thresholds for ozone precursors)?	☐	☐	☒	☐

No. Although there are portions of Inyo County within non-attainment areas for Federal and State PM10 (particulate matter 10 microns or less in diameter) ambient air quality standards, the primary source for this pollution is the Owens dry lake, located approx. 60-miles from the project site. As a result of this distance, the project will not increase PM10 pollutants over existing levels, and the project will have a less than significant impact on PM10 levels. The applicant would also be subject to Great Basin Unified Air Pollution Control District County building and safety regulations regarding dust mitigation during construction.

d) Expose sensitive receptors to substantial pollutant concentrations?	☐	☐	☐	☒

No, the proposed project is a utility service center that will not create or expose sensitive receptors to substantial pollutant concentrations.

e) Create objectionable odors affecting a substantial number of people?	☐	☐	☐	☒

No, the proposed project is a utility service center that will not create objectionable odors.

IV. BIOLOGICAL RESOURCES: Would the project: a) Have a substantial adverse effect, either directly or through habitat modifications, on any species identified as a candidate, sensitive, or special status species in local or regional plans, policies, or regulations, or by the California Department of Fish and Game or U.S. Fish and Wildlife Service?	☐	☒	☐	☐

A Biological Technical Report was prepared for the project (DUDEK, June 2014), for the full report please see: ***http://inyoplanning.org/projects.htm.***
The results of this report and mitigation measures have been incorporated herein.

A special status vegetation community (Spiny hop sage) was observed within the greater project area and in the vicinity during a field survey conducted by the applicant. Although the project would result in direct and permanent impacts to an approximate 7-acre area of spiny hop sage habitat, it is not locally rare and the impacts are small relative to the extent that this vegetation community exists in the area (less than 1-percent would be affected). A weed abatement and control plan will be required of the applicant prior to the issuance of any grading permits to serve as mitigation for the project resulting in impacts associated with the introduction of invasive weeds to less than significant.

The few-flowered eriastrum, a special status plant species, was also observed during the applicant's survey of the project area and the crowned muilla (also a special status species) has a moderate potential to occur within the project area (it was not observed during the applicants survey). The project will not result in direct impacts to the few-flowered eriastrum, nor the crowned muilla, however, as they are both considered locally widespread and secure within their range; and therefore, potential direct and indirect impacts to these special status species would be less than significant.

There are eight special status wildlife species that have moderate to high potential to occur on site (all of these species are either birds or bats), and one special status wildlife species with moderate potential to occur within the project area (white-tailed jackrabbit). These species have the potential to forage within the project area; however, no nesting or roosting habitats for these species is present and no individuals were sighted during the survey. To ensure that potential impacts to these species are addressed mitigation measures include: within 7 days of ground-disturbing activities associated with construction or grading that would occur during the nesting/breeding season of native bird species potentially nesting on the site (typically February through August in the

	Potentially Significant Impact	Less Than Significant With Mitigation Incorporation	Less Than Significant Impact	No Impact

Project region, or as determined by a qualified biologist), the applicant shall have a single pre-construction survey conducted by a qualified biologist to determine if active nests of bird species protected by the Migratory Bird Treaty Act and/or the California Fish and Game Code are present in the disturbance zone or within 300 feet (500 feet for raptors) of the disturbance zone. If nesting birds are found to be present, surveys will continue on a weekly basis until those within the disturbance zone or buffer area are finished nesting. If active nests are found, clearing and construction within 300 feet of the nest (500 feet for raptors) shall be postponed or halted, at the discretion of the biologist in consultation with the California Department of Fish and Wildlife (CDFW), until the nest is vacated and juveniles have fledged, as determined by the biologist, and there is no evidence of a second attempt at nesting. Limits of construction to avoid an active nest shall be established in the field with flagging, fencing, or other appropriate barriers, and construction personnel shall be instructed on the sensitivity of nest areas. The biologist shall serve as a construction monitor during those period when construction activities will occur near active nest areas to ensure that no inadvertent impacts to these nests occur.

Although the project area is within the northwestern portion of the Western Mojave Recovery Unit of the Desert Tortoise, no suitable burrows for desert tortoise were observed in the project area during the survey. Also, the closest occurrence record for this species is located approximately 72-miles south of the project area. This species is not expected to occur on the site. To ensure that potential impacts to any of the species addressed in the technical report are addressed, mitigation measures include: No more than 72 hours prior to the start of construction activities, the project applicant shall conduct a pre-construction biological survey for special-status species determined to have potential to occur in within the Project Area (including desert tortoise). If special-status species are detected during pre-construction surveys, appropriate mitigation plans will be prepared by a qualified biologist. Additionally, a biological monitor will be present periodically during construction to ensure that impacts to special-status species do not occur and disturbance boundaries are respected.

b) Have a substantial adverse effect on any riparian habitat or other sensitive natural community identified in local or regional plans, policies, regulations or by the California Department of Fish and Game or US Fish and Wildlife Service?	☐	☒	☐	☐

The project area includes about 1-acre of jurisdictional waters that would be impacted by the proposed project. These impacts could include to biological resources, including habitat loss or conversion from erosion, sedimentation and hydro-modification. The applicant will be required to obtain permits from the appropriate agencies as part of their project approval. To ensure that potential impacts to jurisdictional waters are addressed the project applicant shall provide evidence that all required regulatory permits have been obtained or are not required by the regulatory agencies. Required permits may include the U.S. Army Corps of Engineers Section 404 of the Clean Water Act, CDFW Section 1600 Streambed Alteration Agreement, and Regional Water Quality Control Board Section 401 certification. Regulatory permit applications would demonstrate that adequate avoidance, minimization, and if deemed necessary by the agencies, compensatory mitigation, have been provided to reduce adverse impacts to downstream biological resources. Adequate avoidance and minimization measures may include incorporation of storm-water management facilities to minimize increases in storm-water discharge rates (preferably minimizing losses to private land in Inyo County).

c) Have a substantial adverse effect on federally protected wetlands as defined by Section 404 of the Clean Water Act (including, but not limited to, marsh, vernal pool, coastal, etc.) through direct removal, filling, hydrological interruption, or other means?	☐	☐	☐	☒

No, the project area does not include wetlands.

d) Interfere substantially with the movement of any native resident or migratory fish or wildlife species or with established native resident or migratory wildlife corridors, or impede the use of native wildlife nursery sites?	☐	☐	☐	☒

*No, the project will not impede wildlife from passing through the project area, no nesting or other nursery sites were found during the applicant's survey (Please see **http://inyoplanning.org/projects.htm.**, Biological Technical Report (DUDEK, June 2014). .*

e) Conflict with any local policies or ordinances protecting biological resources, such as a tree	☐	☐	☐	☒

	Potentially Significant Impact	Less Than Significant With Mitigation Incorporation	Less Than Significant Impact	No Impact

preservation policy or ordinance?
No, the County's General Plan Policies regarding Biological Resources are being met by the applicant.

f) Conflict with the provisions of an adopted Habitat Conservation Plan, Natural Community Conservation Plan, or other approved local, regional, or state habitat conservation plan?	☐	☐	☐	☒

No, the project area is not included within any such plans.

V. CULTURAL RESOURCES: Would the project: a) Cause a substantial adverse change in the significance of a historical resource as defined in Section 15064.5?	☐	☒	☐	☐

*A Cultural Resources Survey and Evaluation Report was prepared for the project (DUDEK, July 2014-**confidential**). The results of this report and mitigation measures have been incorporated herein.*
There is a site in the project area that was determined to be eligible for California Register of Historic Resources (CRHR). This area is not located within the project's footprint, however. Historic refuse scatters have also been found in the project area, but again, outside of the project footprint. Since there is the potential for additional cultural resources to be found on the site based on what has been found previously, mitigation measures to ensure that potential impacts to potential resources are addressed include: a qualified archaeologist (Project Archaeologist) be retained to implement a limited cultural mitigation program. An archaeological monitor and Native American monitor will be present during the initial disturbances of native soil with potential to contain cultural deposits. Cultural resource monitoring may be reduced from initial full-time monitoring to periodic spot checks, or discontinued if appropriate, once the Project Archaeologist determines that there is little or no risk to encounter cultural material. Results of this cultural monitoring program should be submitted to the County in a report, commensurate with the results of the mitigation (e.g., a letter report if negative). Should any cultural resources be encountered within the project area, monitors should be given the authority to temporarily halt or divert work from the location of the discovery in order to assess and evaluate the discovery. In the event that human remains or related cultural material are encountered, Section 15064.5(e) of CEQA requires work to be stopped and the County Coroner notified in accordance with California Health and Safety Code 7050.5

b) Cause a substantial adverse change in the significance of an archaeological resource pursuant to Section 15064.5?	☐	☒	☐	☐

Although, no archaeological resources have been formally recorded at the site, nor were any identified during the applicant's survey, the area has been historically mapped with camps/villages, irrigation ditches and gathering areas. Due to this previous mapping, there is the potential that archaeological resources may be found on the site. To ensure that potential impacts to potential resources are addressed mitigation measures have been included. Please see 5(a) above.

c) Directly or indirectly destroy a unique paleontological resource or site or unique geologic feature?	☐	☒	☐	☐

No, although no paleontological resources have been found on the site the area has been historically mapped with camps/villages, irrigation ditches and gathering areas. Due to this previous mapping, there is the potential that paleontological resources may be found on the site. To ensure that potential impacts to potential resources are addressed mitigation measures have been included. Please see 5(a)(b) above.

d) Disturb any human remains, including those interred outside of formal cemeteries?	☐	☒	☐	☐

No, Please see 5(a)(b)(c) above.

VI. GEOLOGY AND SOILS: Would the project:
a) Expose people or structures to potential substantial adverse effects, including the risk of loss, injury, or death involving:

	Potentially Significant Impact	Less Than Significant With Mitigation Incorporation	Less Than Significant Impact	No Impact
i) Rupture of a known earthquake fault, as delineated on the most recent Alquist-Priolo Earthquake Fault Zoning Map issued by the State Geologist for the area or based on other substantial evidence of a known fault? Refer to Division of Mines and Geology Special Publication 42.	☐	☐	☐	☒

No, the project area is not located within an Alquist-Priolo Earthquake Fault Zone.

ii) Strong seismic ground shaking?	☐	☐	☒	☐

Ground shaking may occur anywhere in the region, due to numerous earthquake faults, regardless of whether the project site is within an identified Alquist-Priolo zone or not. However, the Uniform Building Code insures that future structures shall constructed to required seismic standards (Level IV) in order to withstand such shaking, and so this potential impact is considered less than significant.

iii) Seismic-related ground failure, including liquefaction?	☐	☐	☐	☒

No the project area is not within an area of soils know to be subject to liquefaction.

iv) Landslides?	☐	☐	☐	☒

No, the project area is not subject to landslides.

b) Result in substantial soil erosion or the loss of topsoil?	☐	☐	☒	☐

No, Development on the project site is required to conform to all drainage, grading, and "Best Management Practice (BMP) requirements as set forth by the Inyo County Public Works Department, Inyo County of Inyo Environmental Health Services Department, and other associated regulatory agencies. As a result of this regulation, potential impacts are considered less than significant.

c) Be located on a geologic unit or soil that is unstable, or that would become unstable as a result of the project, and potentially result in on- or off-site landslide, lateral spreading, subsidence, liquefaction or collapse?	☐	☐	☐	☒

No, the project is not located on a geologic unit or soil that is considered unstable.

d) Be located on expansive soil, as defined in Table 18-1-B of the Uniform Building Code (1994), creating substantial risks to life or property?	☐	☐	☐	☒

No, the project is not located on a geologic unit or soil that is considered expansive.

e) Have soils incapable of adequately supporting the use of septic tanks or alternative waste water disposal systems where sewers are not available for the disposal of waste water?	☐	☐	☒	☐

No, the project location is capable of adequately supporting the necessary septic system. The applicant also will be required to obtain permits from the County Environmental Health Department for a waste water disposal system. As a result of these requirements, potential impacts are considered less than significant.

VII. GREENHOUSE GAS EMISSIONS:

Would the project:

a) Generate greenhouse gas emissions, either directly or indirectly, that may have a significant impact on the environment?	☐	☐	☐	☒

No, the project will not impose more use intensity than is currently conducted by the applicant on the existing sites that will be subsequently closed and therefore, will not result in greenhouse gas emissions, directly or indirectly that will have an impact on the environment.

	Potentially Significant Impact	Less Than Significant With Mitigation Incorporation	Less Than Significant Impact	No Impact
b) Conflict with an applicable plan, policy, or regulation adopted for the purpose of reducing the emissions of greenhouse gases?	☐	☐	☐	☒

No, the proposed project will not conflict with any such plan, policy or regulation.

VIII. HAZARDS AND HAZARDOUS MATERIALS:

Would the project:

a) Create a significant hazard to the public or the environment through the routine transport, use, or disposal of hazardous materials?	☐	☐	☒	☐

No, although the project does include the maintenance of service vehicles and the storage of fluids and equipment for this maintenance as well as utility line infrastructure and associated fluids (transformers containing mineral oil) the applicant will be required to obtain permits from the County Environmental Health Department regarding the storage and disposal of hazardous materials used in these operations that will result in potential impacts to be considered less than significant.

b) Create a significant hazard to the public or the environment through reasonably foreseeable upset and accident conditions involving the release of hazardous materials into the environment?	☐	☐	☒	☐

No, although the project does include the maintenance of service vehicles and the storage of fluids and equipment for this maintenance as well as utility line infrastructure and associated fluids (transformers containing mineral oil) the applicant will be required to obtain permits from the County Environmental Health Department regarding the storage and disposal of hazardous materials used in these operations that will result in potential impacts to be considered less than significant.

c) Emit hazardous emissions or handle hazardous or acutely hazardous materials, substances, or waste within one-quarter mile of an existing or proposed school?	☐	☐	☒	☐

No, the project is not located within one-quarter mile of a school.

d) Be located on a site which is included on a list of hazardous materials sites compiled pursuant to Government Code Section 65962.5 and, as a result, would it create a significant hazard to the public or the environment?	☐	☐	☐	☒

No, the project is not located on a site included on a list of hazardous materials sites compiled pursuant to Government Code Section 65962.5.

e) For a project located within an airport land use plan or, where such a plan has not been adopted, within two miles of a public airport or public use airport, would the project result in a safety hazard for people residing or working in the project area?	☐	☐	☒	☐

No, although the proposed project includes the use of helicopters for patrolling utility lines the helicopters would be used on an average of once a week. The helicopter operations are regulated by State and Federal Laws. Due to the infrequency and distance to the nearest populated area the potential impacts are considered less than significant. Additionally, the project is not located within an area included in an airport landuse plan, nor is it within two miles of an airport.

f) For a project within the vicinity of a private airstrip, would the project result in a safety hazard for people residing or working in the project area?	☐	☐	☐	☒

No, the project is not located within the vicinity of a private airstrip.

	Potentially Significant Impact	Less Than Significant With Mitigation Incorporation	Less Than Significant Impact	No Impact
g) Impair implementation of or physically interfere with an adopted emergency response plan or emergency evacuation plan?	☐	☐	☐	☒

No, the project is located on property that is adjacent to a State Highway and does not provide access through it for emergency vehicles; therefore, it will not physically interfere with an adopted emergency plan or emergency evacuation plan.

h) Expose people or structures to a significant risk of loss, injury or death involving wildland fires, including where wildlands are adjacent to urbanized areas or where residences are intermixed with wildlands?	☐	☐	☒	☐

No, the proposed project location is located in a State Responsibility Area for fire protection and the project applicant will be required to comply with the wildland/urban interface fire protection requirements, California Fire Code and current building code requirements for fire suppression. The applicant will is also working with the Bishop Rural Fire District to provide fire protection services to the property. Based on these regulations and requirements, potential impacts are considered less than significant.

IX. HYDROLOGY AND WATER QUALITY: Would the project:

a) Violate any water quality standards or waste discharge requirements?	☐	☐	☒	☐

No, the applicant will be required to obtain permits from the County Environmental Health Department for a waste water disposal system. As a result of these requirements, potential impacts are considered less than significant.

b) Substantially deplete groundwater supplies or interfere substantially with groundwater recharge such that there would be a net deficit in aquifer volume or a lowering of the local groundwater table level (e.g., the production rate of pre-existing nearby wells would drop to a level which would not support existing land uses or planned uses for which permits have been granted)?	☐	☐	☒	☐

No, the proposed project location is not within a community water system, therefore it will be necessary for the applicant to develop wells and water storage systems for both potable water and water for fire suppression. The applicant has already tested the site for potable water and found that there is available potable water on the site. The applicant will be working on an agreement with the Community College, located to the west, to share potable water with them and, in turn, use the college's fire suppression water storage facility.

The applicant is working with the County Environmental Health Department and the college on a 'shared water' agreement and will be required to obtain permits from the County Environmental Health Department that must comply with the State of California Well standards to construct wells on the property, as a result of these requirements, potential impacts are considered less than significant.

c) Substantially alter the existing drainage pattern of the site or area, including through the alteration of the course of a stream or river, in a manner which would result in substantial erosion or siltation on- or off-site?	☐	☐	☒	☐

No, the applicant will be required to contain and treat of storm-water runoff prior to construction, as a result of these requirements, potential impacts are considered less than significant.

d) Substantially alter the existing drainage pattern of the site or area, including through the alteration of the course of a stream or river, or substantially increase the rate or amount of surface runoff in a manner which would result in flooding on or off-site?	☐	☐	☒	☐

No, the applicant will be required to contain and treat of storm-water runoff prior to construction, as a result of these requirements, potential impacts are considered less than significant.

	Potentially Significant Impact	Less Than Significant With Mitigation Incorporation	Less Than Significant Impact	No Impact
e) Create or contribute runoff water which would exceed the capacity of existing or planned stormwater drainage systems or provide substantial additional sources of polluted runoff?	☐	☐	☒	☐

No, the applicant will be required to provide a plan showing how they will contain and treat of storm-water runoff prior to construction, as a result of these requirements, potential impacts are considered less than significant.

f) Otherwise substantially degrade water quality?	☐	☐	☒	☐

No, the applicant will be required to obtain permits from the County Environmental Health Department for both well development and wastewater disposal, as a result of these requirements, potential impacts are considered less than significant.

g) Place housing within a 100-year flood hazard area as mapped on a federal Flood Hazard Boundary or Flood Insurance Rate Map or other flood hazard delineation map?	☐	☐	☐	☒

No, the project does not include housing, nor is it in a 100-year flood hazard area as mapped on a federal Flood Hazard Boundary or Flood Insurance Rate Map or other flood hazard delineation map.

h) Place within a 100-year flood hazard area structures which would impede or redirect flood flows?	☐	☐	☐	☒

No, the project is not within a 100-year flood hazard area.

i) Expose people or structures to a significant risk of loss, injury or death involving flooding, including flooding as a result of the failure of a levee or dam?	☐	☐	☐	☒

No, the proposed project is not in an area subject to flooding due to the failure of a levee or dam.

j) Inundation by seiche, tsunami, or mudflow?	☐	☐	☐	☒

No, the proposed project is not in an area subject to seiches, tsunamis, or mudflows.

X. LAND USE AND PLANNING: Would the project:

a) Physically divide an established community?	☐	☐	☐	☒

No, the project location is outside the community of Bishop and removed from any residential development.

b) Conflict with any applicable land use plan, policy, or regulation of an agency with jurisdiction over the project (including, but not limited to the general plan, specific plan, local coastal program, or zoning ordinance) adopted for the purpose of avoiding or mitigating an environmental effect?	☐	☐	☐	☒

No, the project if approved as conditioned, will not conflict with any applicable land use plans, policies or regulations.

c) Conflict with any applicable habitat conservation plan or natural community conservation plan?	☐	☐	☐	☒

No, the project area is not included in an applicable conservation plan or natural community plan.

XI. MINERAL RESOURCES: Would the project:

a) Result in the loss of availability of a known mineral resource that would be of value to the region and the residents of the state?	☐	☐	☐	☒

No, the project location is not within an area with known mineral resources.

	Potentially Significant Impact	Less Than Significant With Mitigation Incorporation	Less Than Significant Impact	No Impact
b) Result in the loss of availability of a locally-important mineral resource recovery site delineated on a local general plan, specific plan, or other land use plan?	☐	☐	☐	☒

No, the project location is not within a known mineral resource recovery site.

XII. NOISE: Would the project result in the:

a) Exposure of persons to or generation of noise levels in excess of standards established in the local general plan or noise ordinance, or applicable standards of other agencies?	☐	☐	☒	☐

A Noise Study and Memorandum was prepared for the project (DUDEK, July 2014), for the full memorandum please see: ***http://inyoplanning.org/projects.htm.*** *The results of the noise study are incorporated within.*
No, although the applicants proposed operations include the use of helicopters for patrolling utility lines. The helicopters would be used on an average of once a week, due to the infrequency and distance to the nearest sensitive receptors the potential impacts are considered less than significant.
The project proposal also includes a maintenance garage. The garage's operations are proposed for 3:00 p.m. to 12:00 a.m. Monday-Thursday and 12:00 p.m. to 9:00 p.m. on Fridays. The estimated noise levels from the maintenance garage's operations are below ambient noise levels and would not be audible within the class rooms or offices of the Community College the nearest noise sensitive land use.

b) Exposure of persons to or generation of excessive groundborne vibration or groundborne noise levels?	☐	☐	☒	☐

No, although the applicants proposed operations include the use of helicopters for patrolling utility lines. The helicopters would be used on an average of once a week, due to the infrequency and distance to the nearest sensitive receptors the potential impacts are considered less than significant.
The project proposal also includes a maintenance garage. The garage's operations are proposed for 3:00 p.m. to 12:00 a.m. Monday-Thursday and 12:00 p.m. to 9:00 p.m. on Fridays. The estimated noise levels from the maintenance garage's operations are below ambient noise levels and would not be audible within the class rooms or offices of the Community College the nearest noise sensitive land use.

c) A substantial permanent increase in ambient noise levels in the project vicinity above levels existing without the project?	☐	☐	☐	☒

No, please see XII(a) above.

d) A substantial temporary or periodic increase in ambient noise levels in the project vicinity above levels existing without the project?	☐	☐	☐	☒

No, please see XII(a) above.

e) For a project located within an airport land use plan or, where such a plan has not been adopted, within two miles of a public airport or public use airport, would the project expose people residing or working in the project area to excessive noise levels?	☐	☐	☐	☒

No, the project location is not within two-miles of and airport or included in an airport land use plan.

f) For a project within the vicinity of a private airstrip, would the project expose people residing or working in the project area to excessive noise levels?	☐	☐	☐	☒

No, the project location is not within the vicinity of a private airstrip.

XIII. POPULATION AND HOUSING -- Would the project:

	Potentially Significant Impact	Less Than Significant With Mitigation Incorporation	Less Than Significant Impact	No Impact
a) Induce substantial population growth in an area, either directly (for example, by proposing new homes and businesses) or indirectly (for example, through extension of roads or other infrastructure)?	☐	☐	☐	☒

No, the proposed project is a utility service center that does not include new housing or infrastructure improvements that would stimulate population growth in the area.

b) Displace substantial numbers of existing housing, necessitating the construction of replacement housing elsewhere?	☐	☐	☐	☒

No, the proposed project is a utility service center that does not include the displacement of existing housing.

c) Displace substantial numbers of people, necessitating the construction of replacement housing elsewhere?	☐	☐	☐	☒

No, the proposed project is a utility service center that does not include the displacement of people.

XIV. PUBLIC SERVICES: Would the project:

a) Result in substantial adverse physical impacts associated with the provision of new or physically altered governmental facilities, need for new or physically altered governmental facilities, the construction of which could cause significant environmental impacts, in order to maintain acceptable service ratios, response times or other performance objectives for any of the public services:

Fire protection?	☐	☐	☒	☐

No, the applicant will be required to comply with the wildland/urban interface fire protection requirements, California Fire Code and current building code requirements for fire suppression. The applicant is also working with the Bishop Rural Fire District to provide fire protection services. Based on these regulations and requirements, potential impacts are considered less than significant.

Police protection?	☐	☐	☐	☒

No, the project location is within the jurisdiction of the Inyo County Sherriff Department and will not cause significant impacts that would affect acceptable service ratios.

Schools?	☐	☐	☐	☒

No, the proposed project is a utility service center that will not increase the number of school aged children in the area.

Parks?	☐	☐	☐	☒

No, the proposed project is a utility service center that will not increase the need for park and recreation opportunities in the area.

Other public facilities?	☐	☐	☐	☒

No, the proposed project is a utility service center that will not increase the need for 'other' public facilities.

XV. RECREATION: Would the project:

a) Increase the use of existing neighborhood and regional parks or other recreational facilities such that substantial physical deterioration of the facility would occur or be accelerated?	☐	☐	☐	☒

No, the proposed project is a utility service center that will not increase the use of park and recreation opportunities in the area such that substantial physical deterioration of existing facilities would occur or be accelerated.

b) Does the project include recreational facilities or	☐	☐	☐	☒

	Potentially Significant Impact	Less Than Significant With Mitigation Incorporation	Less Than Significant Impact	No Impact
require the construction or expansion of recreational facilities which might have an adverse physical effect on the environment?				

No, the proposed project is a utility service center that does not include recreational facilities.

XVI. TRANSPORTATION/TRAFFIC -- Would the project:

a) Conflict with an applicable plan, ordinance, or policy establishing measures of effectiveness for the performance of the circulation system, taking into account all modes of transportation including mass transit and non-motorized travel and relevant components of the circulation system, including, but not limited to, intersections, streets, highways and freeways, pedestrian and bicycle paths, and mass transit?	☐	☐	☐	☒

A Traffic Study and Memorandum was prepared for the project (DUDEK, July 2014), for the full memorandum please see: ***http://inyoplanning.org/projects.htm.*** *The results of the traffic study are incorporated within.*
The proposed project is located along State Highway-168. It and Ed Powers Road, a two-lane rural road were evaluated by the applicant. State Highway-168 will require the appropriate encroachment permits from the California Department of Transportation, as well. Both roadways were evaluated for Level of Service Standards (LOS) for both the construction period and on-going operations. The project in both the construction phase and on-going operations meet the County's General Plan policy Roads and highways (RH) 1.4 Level of Service of "C" on all roadways in the County. Neither road is identified by the County as a bicycle route and the operations at the service center will not impact the local transit service to the Community College located to the southwest.

b) Conflict with an applicable congestion management program, including, but not limited to, level of service standards and travel demand measures, or other standards established by the county congestion management agency for designated roads or highways?	☐	☐	☐	☒

No, please see XVI (a) above.

c) Result in a change in air traffic patterns, including either an increase in traffic levels or a change in location that results in substantial safety risks?	☐	☐	☒	☐

No, although the proposed project includes the use of helicopters for patrolling utility lines. The proposed project site is about 5.5-miles from the nearest airport and the helicopters would be used on an average of once a week. Due to the infrequency of flights and the distance to the nearest airport the potential impacts are considered less than significant.

d) Substantially increase hazards due to a design feature (e.g., sharp curves or dangerous intersections) or incompatible uses (e.g., farm equipment)?	☐	☐	☐	☒

No, the project will not require major design changes to the roadway or intersections and will not conflict with incompatible uses in the area.

e) Result in inadequate emergency access?	☐	☐	☐	☒

No, the project is located off of State Highway-168. It will not impede emergency access to either the site or to the surrounding area.

f) Conflict with adopted policies, plans, or programs regarding public transit, bicycle, or pedestrian facilities, or otherwise decrease the performance or safety of such facilities?	☐	☐	☐	☒

No, please see XVI (a) above.

XVII. UTILITIES AND SERVICE SYSTEMS --

	Potentially Significant Impact	Less Than Significant With Mitigation Incorporation	Less Than Significant Impact	No Impact
Would the project: a) Exceed wastewater treatment requirements of the applicable Regional Water Quality Control Board?	☐	☐	☒	☐

No, the applicant will be required to obtain permits from the County Environmental Health Department for a waste water disposal system. As a result of these requirements, potential impacts are considered less than significant.

b) Require or result in the construction of new water or wastewater treatment facilities or expansion of existing facilities, the construction of which could cause significant environmental effects?	☐	☐	☒	☐

No, the applicant will be required to obtain permits from the County Environmental Health Department for both new water and a waste water disposal system. As a result of these requirements, potential impacts are considered less than significant.

c) Require or result in the construction of new storm water drainage facilities or expansion of existing facilities, the construction of which could cause significant environmental effects?	☐	☐	☒	☐

No, the applicant will be required to provide project information regarding the containment and/or treatment of storm-water runoff prior to construction, as a result of these requirements, potential impacts are considered less than significant.

d) Have sufficient water supplies available to serve the project from existing entitlements and resources, or are new or expanded entitlements needed?	☐	☐	☐	☒

Yes, the applicant has evaluated the project site for potable water sources and found that there is sufficient on-site water availability to serve the project. The applicant is also working with the neighboring community college to share potable water with them in exchange for fire suppression water and storage. The applicant will be required to obtain permits from the County Environmental Health Department that must comply with the State of California Well standards to construct wells on the property.

e) Result in a determination by the wastewater treatment provider which serves or may serve the project that it has adequate capacity to serve the project's projected demand in addition to the provider's existing commitments?	☐	☐	☐	☒

No, the proposed project will not be serviced by a wastewater treatment facility.

f) Be served by a landfill with sufficient permitted capacity to accommodate the project's solid waste disposal needs?	☐	☐	☐	☒

Yes, the project is served by a county landfill that has the capacity to accommodate the project's solid waste disposal needs.

g) Comply with federal, state, and local statutes and regulations related to solid waste?	☐	☐	☐	☒

Yes, the applicant will be required to comply with federal, state and local statues and regulations related to solid waste.

XVIII. MANDATORY FINDINGS OF SIGNIFICANCE:

a) Does the project have the potential to degrade the quality of the environment, substantially reduce the habitat of a fish or wildlife species, cause a fish or wildlife population to drop below self-sustaining levels, threaten to eliminate a plant or animal community, reduce the number or restrict the range of a rare or endangered plant or animal or eliminate important examples of the major periods of California history or prehistory?	☐	☒	☐	☐

	Potentially Significant Impact	Less Than Significant With Mitigation Incorporation	Less Than Significant Impact	No Impact

Based on the information submitted by the applicant, the project could have the potential to create a significant adverse impact on biological and cultural resources. However, with the incorporation of the mitigation measures recommended herein, it has been found that the project will not result in a significant adverse impact.

b) Does the project have impacts that are individually limited, but cumulatively considerable? ("Cumulatively considerable" means that the incremental effects of a project are considerable when viewed in connection with the effects of past projects, the effects of other current projects, and the effects of probable future projects)?	☐	☐	☐	☒

No, the project is a utility service center that will replace two existing facilities, therefore no cumulative effects will occur due to increased activity from the new service center. Also in the immediate vicinity Southern California Edison has a project proposal to replace the 'conductors' on exiting utility poles and replace one wood and one lattice steel pole. This project should be completed before the Service Center Project begins and would not create cumulative effects since there will be no disturbance (it is a replacement project) from it in the vicinity; other projects in the vicinity are limited to two small subdivisions, these do not included development and therefore will not create disturbances that could cause cumulative effects. Regional plans in the vicinity include "Adventure Trails of the Eastern Sierra Program" this is a plan for Off Highway Vehicle shared use roads. Ed Powers Road, located in the vicinity is one of the routes being evaluated in the plan. The plan does not include development at this time. If Ed Powers Road is identified in the plan as a shared use route, it, along with the traffic anticipated from the service center, would not cause incremental effects in connection with the service center. The Level of Service standard for Ed Powers Road is well within the County's standards and will not be reduced to an unacceptable level based on increased traffic from the new service center.

c) Does the project have environmental effects which will cause substantial adverse effects on human beings, either directly or indirectly?	☐	☐	☒	☐

No, although the applicants proposed operations includes the use of helicopters for patrolling utility lines. The helicopters would be used on an average of once a week, and due to the infrequency of use and the distance to the nearest sensitive receptors the potential impacts are considered less than significant. The applicant is also proposing to store hazardous materials on the site. These materials include: common fluids that will be required as part of the vehicle fleet such as motor oil, and fuels; and stored utility infrastructure that can include mineral oils. All hazardous material stored on the site will require permits from the County's Environmental Health Department and therefore are considered less than significant.

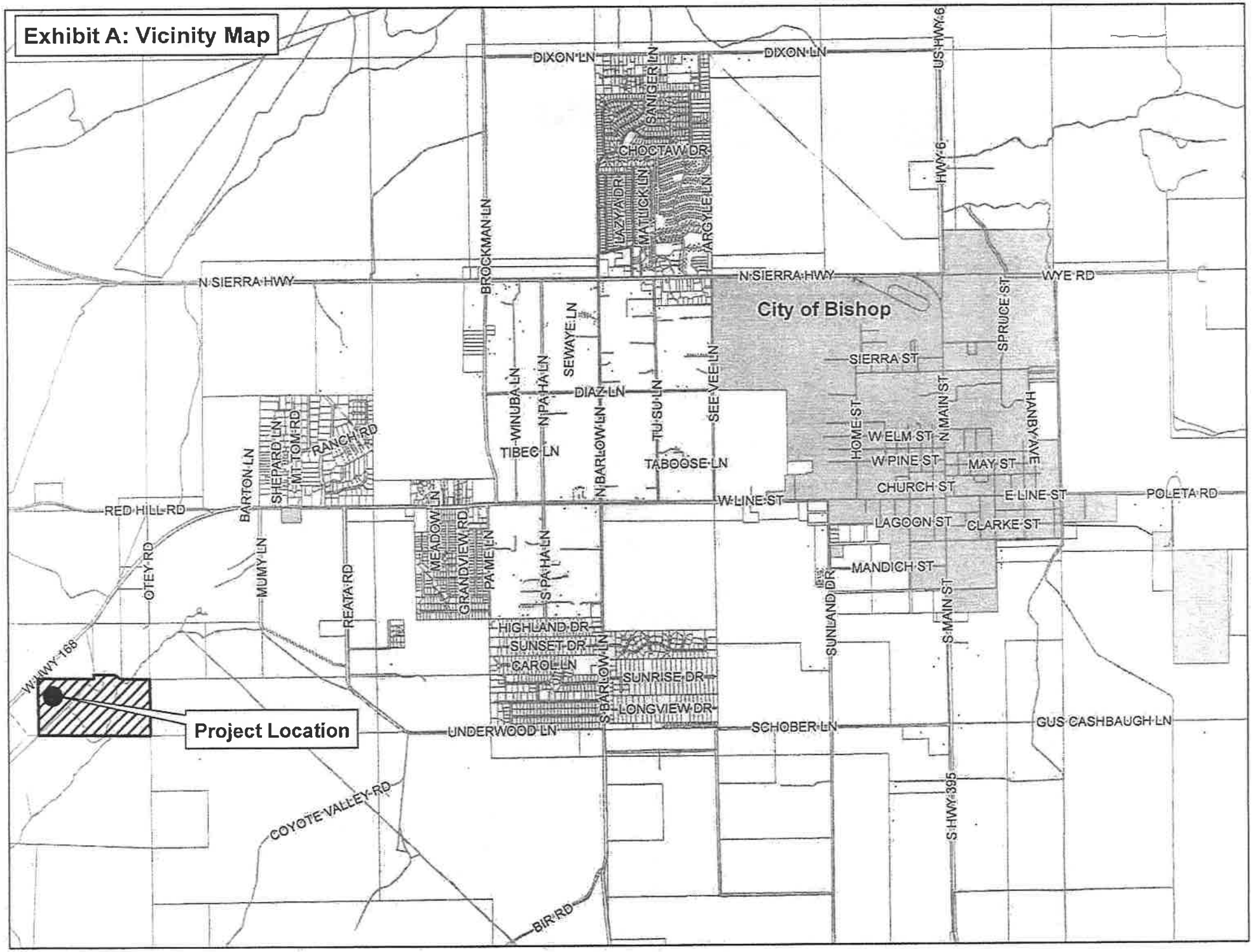
Exhibit A: Vicinity Map
DIXON LN
DIXON LN
US HWY 6
HWY 6
SANGER LN
CHOCTAW DR
LAZY A DR
MATLICK LN
ARGYLE LN
BROCKMAN LN
N SIERRA HWY
N SIERRA HWY
WYE RD
City of Bishop
SPRUCE ST
SEWAYE LN
SIERRA ST
WINUBA LN
N PAHA LN
DIAZ LN
TU SU LN
SEE VEE LN
HOME ST
N MAIN ST
HANBY AVE
W ELM ST
W PINE ST
MAY ST
CHURCH ST
E LINE ST
POLETA RD
TIBEC LN
N BARLOW LN
TABOOSE LN
W LINE ST
LAGOON ST
CLARKE ST
MANDICH ST
SHEPARD LN
MT TOM RD
RANCH RD
BARTON LN
RED HILL RD
MEADOW LN
GRANDVIEW RD
PAMELA LN
S PAHA LN
OTEY RD
MUMY LN
REATA RD
SUNLAND DR
S MAIN ST
HIGHLAND DR
SUNSET DR
CAROL LN
SUNRISE DR
LONGVIEW DR
S BARLOW LN
W HWY 168
Project Location
UNDERWOOD LN
SCHOBER LN
GUS CASHBAUGH LN
S HWY 395
COYOTE VALLEY RD
BIR RD

Exhibit B: Site Plan

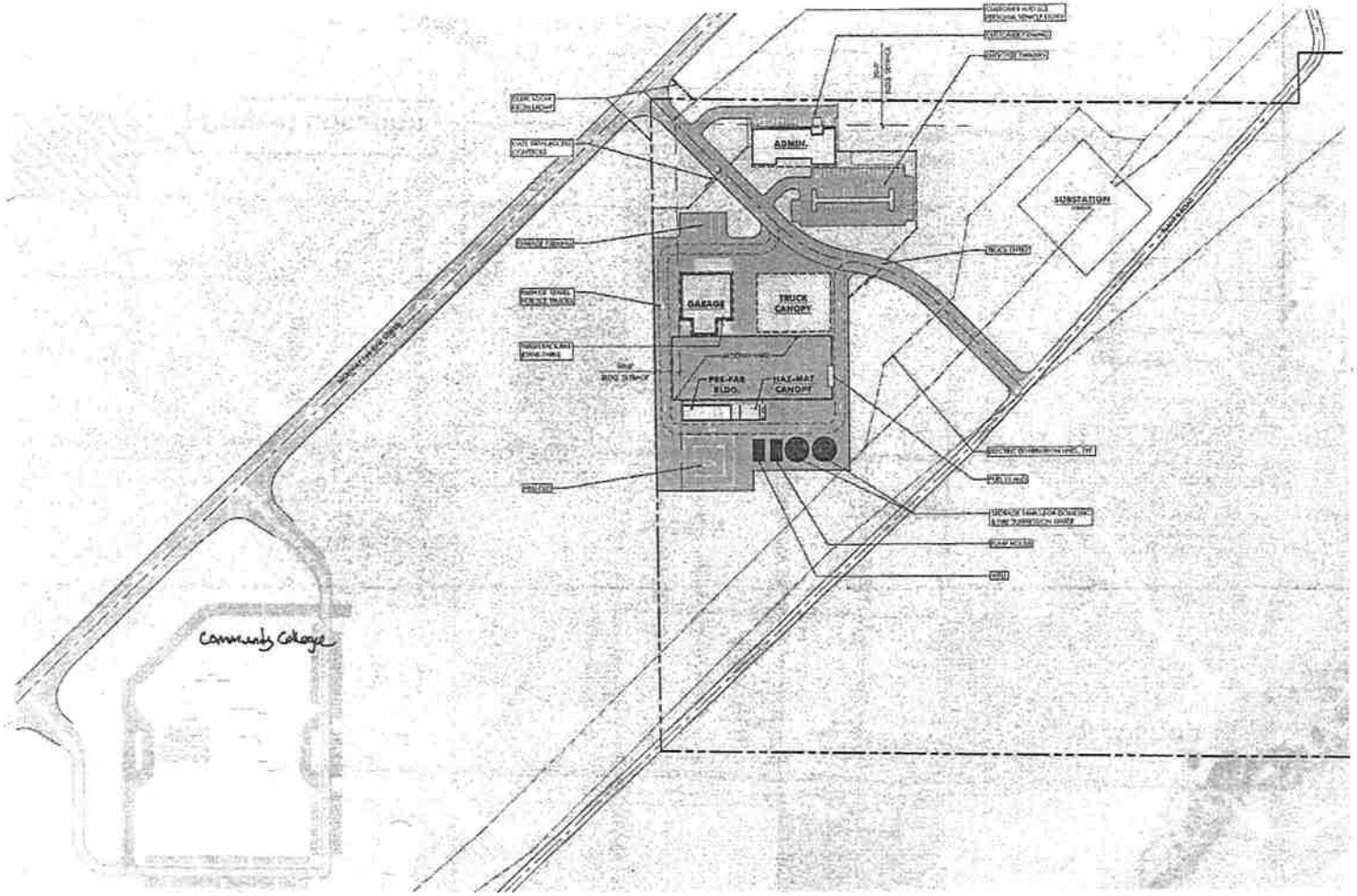

EXISTING SITE TABULATIONS:

SITE AREA TABULATIONS:	
PROPOSED LAYDOWN AREA:	2 ACRES
TOTAL PROPOSED DEVELOPED SITE AREA:	4.9 ACRES
BUILDING AREA:	
PROPOSED ADMIN. BUILDING:	10,950 SF
PROPOSED GARAGE BUILDING:	12,500 SF
PROPOSED PRE-FAB BUILDING:	3,000 SF
PROPOSED HAZ-MAT STORAGE CANOPY:	2,275 SF
PROPOSED TRUCK CANOPY:	17,750 SF
TOTAL PROPOSED BUILDING AREA:	45,515 SF
PARKING TABULATIONS:	
NEW - SECURE CUSTOMER PARKING: STANDARD STALLS:	14 STALLS
NEW - SECURE CUSTOMER PARKING: ACCESSIBLE STALLS:	2 STALLS
SECURE EMPLOYEE PARKING STANDARD STALLS:	63 STALLS
SECURE EMPLOYEE PARKING ACCESSIBLE STALLS:	3 STALLS
SECURE SUV TRUCK PARKING STALLS:	8 STALLS
TOTAL SECURE PARKING STALLS PROVIDED:	90 STALLS

OPTION A: **PROPOSED SITE PLAN**

NORTH

SCALE: 1"=100'-0"

Bishop Service Center

FEASIBILITY STUDY

JULY 24, 2013

SOUTHERN CALIFORNIA EDISON

EDISON INTERNATIONAL Company

A1

ELEMENTO ARCHITECTURE

Exhibit F
Biological Technical Report

Attachment 2
Project Design Plans

SOUTHERN CALIFORNIA
EDISON

BISHOP SERVICE CENTER
4000 W. LINE STREET, BISHOP, CA 93514
SITE DEVELOPMENT (VOLUME 1)

GENERAL NOTES:

1. ALL GRADING AND SUBGRADE PREPARATION WORK SHALL BE IN ACCORDANCE WITH THE PROJECT GEOTECHNICAL REPORT DATED MAY 26, 2015, PREPARED BY MOORE TWINING ASSOCIATES, INC.
2. ON-SITE GRANULAR SOILS ARE SUITABLE FOR USE AS ENGINEERED COMPACTED FILL, PROVIDED THAT ALL DELETERIOUS MATERIALS, ROOTS, AND DEBRIS ARE EXCLUDED. IMPORTED FILL, IF REQUIRED, SHOULD BE PRIMARILY GRANULAR AND SHALL BE APPROVED BY MOORE TWINING ASSOCIATES, INC. PRIOR TO USE.
3. FILL MATERIAL SHALL BE MIXED AND SPREAD EVENLY IN MAXIMUM 6" UNCOMPACTED LIFTS, MOISTURE CONDITIONED AND COMPACTED TO 92% RELATIVE COMPACTION PER ASTM D1557.
4. CAST-IN-PLACE CONCRETE SHALL HAVE A MINIMUM 28-DAY COMPRESSIVE STRENGTH OF 3,000 PSI.
5. REINFORCING STEEL SHALL HAVE A TENSILE STRENGTH OF 60 KSI.
6. ADJUST ALL VALVE BOXES AND OTHER UTILITY LIDS TO FINISH GRADE.
7. TOPOGRAPHIC SURVEY IS BASED ON FIELD WORK PERFORMED ON AUGUST 29, 2014 BY BLAIR CHURCH & FLYNN, CONSULTING ENGINEERS.

ADDRESS

4000 W. LINE STREET
BISHOP, CA 93514

APN: 012-080-15-00
012-080-40-00

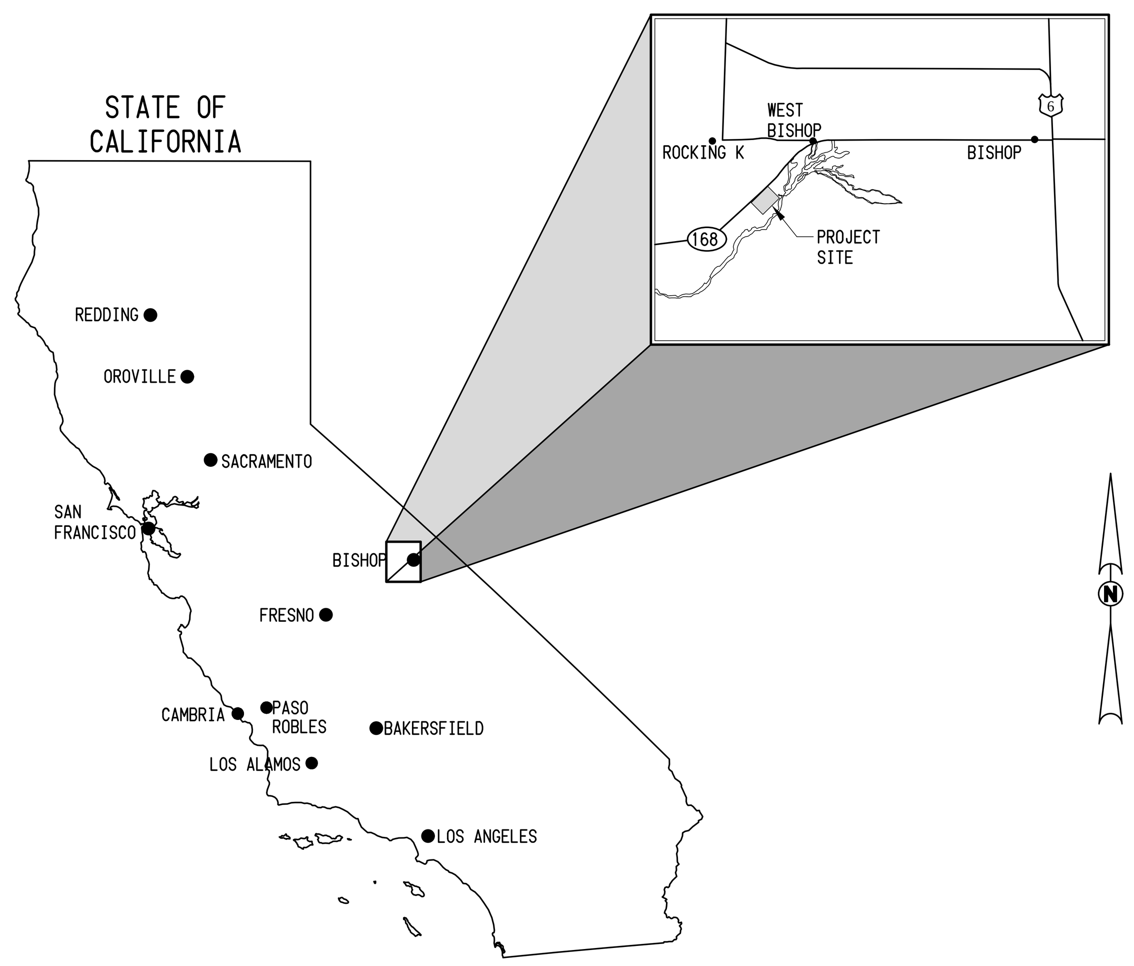

LOCATION MAP
NOT TO SCALE

CAUTION
WATCH FOR OVERHEAD POWER LINES

CONTRACTOR AGREES THAT IN ACCORDANCE WITH GENERALLY ACCEPTED CONSTRUCTION PRACTICES, CONTRACTOR ASSUMES SOLE AND COMPLETE RESPONSIBILITY FOR JOB SITE CONDITIONS DURING THE PERFORMANCE OF WORK, INCLUDING SAFETY OF ALL PERSONS AND PROPERTY, ON A CONTINUOUS BASIS NOT LIMITED TO NORMAL WORKING HOURS. CONTRACTOR FURTHER AGREES TO DEFEND, INDEMNIFY AND HOLD HARMLESS BLAIR, CHURCH & FLYNN CONSULTING ENGINEERS FROM ANY AND ALL LIABILITY, REAL OR ALLEGED, IN CONNECTION WITH THE PERFORMANCE OF WORK ON THIS PROJECT, EXCEPTING LIABILITY ARISING FROM THE SOLE NEGLIGENCE OF BLAIR, CHURCH & FLYNN CONSULTING ENGINEERS.

811 Know what's below. Call before you dig.

REGISTERED PROFESSIONAL ENGINEER PAIGE E. NOGA No. 78,395 CIVIL STATE OF CALIFORNIA
12/3/2021
Date Signed:

PLANS PREPARED BY:
Blair, Church & Flynn
CONSULTING ENGINEERS
451 Clovis Avenue, Suite 200
Clovis, California 93612
Tel (559) 326-1400
Fax (559) 326-1500

NO.	REVISIONS	DATE	SAP WO	SUPV	APPROVED	ENGR	CK'D	MADE	P.E.
1	ADDENDUM #1	03-19-2021				PN	PN	JR	PN
2	ENVIRONMENTAL HEALTH PLAN CHECK REVISIONS	06-18-2021				PN	PN	JR	PN
3	ADDENDUM #2	12-03-2021				PN	PN	JR	PN
4	ADDENDUM #3	02-18-2022				PN	PN	JR	PN

REFERENCE DRAWINGS	REFERENCE DRAWINGS	NO.	REVISIONS	DATE	SAP WO	SUPV	APPROVED	ENGR	CK'D	MADE	P.E.

LOCATION: BISHOP, CALIFORNIA

BISHOP SERVICE CENTER
SITE DEVELOPEMENT
COVER SHEET
VOLUME 1

SOUTHERN CALIFORNIA EDISON An EDISON INTERNATIONAL Company

SHEET NO. C0.0a
SCALE: N/A
1 OF 66 SHTS.

100% CONSTRUCTION DOCUMENTS (12-03-2021)

VOLUME 6 - GARAGE BUILDING

TITLE	SHEET NO.
GENERAL INFORMATION	
COVER SHEET	T0.0f
SHEET INDEX	T0.1f
GENERAL NOTES	T0.2f
CAL GREEN REQUIREMENTS	T0.3f
CAL GREEN REQUIREMENTS	T0.4f
CAL GREEN REQUIREMENTS	T0.5f
ARCHITECTURAL	
LIFE SAFETY PLAN	A1.0f
SLAB PLAN	A1.1f
NOTED FLOOR PLAN	A1.2f
DIMENSIONED FLOOR PLAN	A1.3f
ENLARGED FLOOR PLAN	A1.4f
ROOM AND STATION NUMBERING PLAN	A1.5f
REFLECTED CEILING PLAN	A2.0f
ROOF PLAN	A3.0f
COLORED EXTERIOR ELEVATIONS	A4.0f
EXTERIOR ELEVATIONS	A4.1f
EXTERIOR ELEVATIONS	A4.2f
INTERIOR ELEVATIONS	A5.0f
BUILDING SECTIONS	A6.0f
BUILDING SECTIONS	A6.1f
FINISH PLAN	A7.0f
FINISH SCHEDULE	A7.1f
DOOR, WINDOW, AND HARDWARE SCHEDULES	A8.0f
DETAILS	A9.0f
DETAILS	A9.1f
DETAILS	A9.2f
DETAILS	A9.3f
DETAILS	A9.4f
DETAILS	A9.5f
DETAILS	A9.6f
DETAILS	A9.7f
PACIFIC LIFT DRAWINGS	
EQUIPMENT LAYOUT	Q-1.00
PIPING LAYOUT	Q-1.02
ROTARY VRX 80/48	Q-1.03
ROTARY VRX 80/48	Q-1.04
ROTARY VRX 80/48	Q-1.05
ROTARY VRX 80/48	Q-1.06
ROTARY VRX 80/48	Q-1.07
ROTARY VRX 80/48	Q-1.08
ROTARY VRX 80/48	Q-1.09
ROTARY VRX 80/48	Q-1.10
ROTARY VRX 80/48	Q-1.11
ROTARY VRX 80/48	Q-1.12
ROTARY VRX 80/48	Q-1.13
BRIDGE CRANE DRAWINGS	
(5/5 TON) 10 TON MAX. CAP. URSG BRIDGE CRANE	35778-1
CRANE SYSTEM PLAN	35778-2
CRANE SYSTEM SIDE ELEVATION	35778-3
MECHANICAL	
MECHANICAL GENERAL NOTES, SYMBOLS, & ABBREVIATIONS	M0.1f
MECHANICAL SCHEDULES	M0.2f
MECHANICAL TITLE 24	M0.3f
MECHANICAL TITLE 24	M0.4f
MECHANICAL TITLE 24 ENVELOPE	M0.5f
MECHANICAL FLOOR PLAN	M1.1f
MECHANICAL ROOF PLAN	M1.2f
MECHANICAL SECTION VIEW	M4.1f
MECHANICAL DETAILS	M5.1f
MECHANICAL DETAILS	M5.2f
MECHANICAL PIPING SCHEMATICS	M6.1f
MECHANICAL CONTROLS	M7.1f
PLUMBING	
PLUMBING GENERAL NOTES, SYMBOLS & ABBREVIATIONS	P0.1f
PLUMBING FLOOR PLAN	P1.1f
PLUMBING DETAILS	P5.1f
PLUMBING RISER DIAGRAMS	P7.1f
ELECTRICAL	
ELECTRICAL GENERAL NOTES, SYMBOLS & ABBREVIATIONS	E0.1f
ELECTRICAL GENERAL NOTES	E0.2f
ELECTRICAL FLOOR PLAN	E1.1f
ELECTRICAL ROOF PLAN	E1.2f
LIGHTING PLAN	EL1.1f
LIGHTING PHOTOMETRICS	EL1.2f
ELECTRICAL DETAILS	E5.1f
ELECTRICAL DETAILS	E5.2f
ELECTRICAL SCHEDULES	E6.1f
ELECTRICAL PANEL SCHEDULES	E6.2f
ELECTRICAL PANEL SCHEDULES	E6.3f
ELECTRICAL SINGLE LINE DIAGRAM	E7.1f

VOLUME 5 - FUEL CANOPY

TITLE	SHEET NO.
GENERAL INFORMATION	
COVER SHEET	T0.0e
SHEET INDEX	T0.1e
GENERAL NOTES	T0.2e
ARCHITECTURAL	
FLOOR PLAN	A1.0e
REFLECTED CEILING PLAN	A2.0e
ROOF PLAN	A3.0e
EXTERIOR ELEVATIONS	A4.0e
DETAILS	A5.0e
PLUMBING	
PLUMBING GENERAL NOTES, SYMBOLS, AND ABBREVIATIONS	P0.1e
PLUMBING FLOOR PLAN	P1.1e
ELECTRICAL	
REFERENCE ELECTRICAL PARTIAL SITE PLAN	E1.2a
REFERENCE ELECTRICAL PHOTOMETRIC SITE PLAN	E2.0a

VOLUME 4 - TRUCK CANOPY

TITLE	SHEET NO.
GENERAL INFORMATION	
COVER SHEET	T0.0d
SHEET INDEX	T0.1d
GENERAL NOTES	T0.2d
ARCHITECTURAL	
FLOOR PLAN AND REFLECTED CEILING PLAN	A1.0d
ROOF PLAN AND DETAILS	A2.0d
EXTERIOR ELEVATIONS	A3.0d
ELECTRICAL	
REFERENCE ELECTRICAL PARTIAL SITE PLAN	E1.2a
REFERENCE ELECTRICAL PHOTOMETRIC SITE PLAN	E2.0a

VOLUME 3 - HAZ-MAT CANOPY

TITLE	SHEET NO.
GENERAL INFORMATION	
COVER SHEET	T0.0c
SHEET INDEX	T0.1c
GENERAL NOTES	T0.2c
ARCHITECTURAL	
LIFE SAFETY PLAN	A1.0c
FLOOR SLAB PLAN	A1.1c
FLOOR PLAN	A1.2c
REFLECTED CEILING PLAN	A2.0c
ROOF PLAN	A3.0c
EXTERIOR ELEVATIONS	A4.0c
BUILDING SECTIONS	A5.0c
DETAILS	A6.0c
PLUMBING	
PLUMBING GENERAL NOTES, SYMBOLS, AND ABBREVIATIONS	P0.1c
PLUMBING FLOOR PLAN	P1.1c
ELECTRICAL	
REFERENCE ELECTRICAL PARTIAL SITE PLAN	E1.2a
REFERENCE ELECTRICAL PHOTOMETRIC SITE PLAN	E2.0a

VOLUME 2 - ADMIN & PRE-FAB BUILDING

TITLE	SHEET NO.
GENERAL INFORMATION	
COVER SHEET	T0.0b
SHEET INDEX	T0.1b
GENERAL NOTES	T0.2b
CAL GREEN REQUIREMENTS	T0.3b
CAL GREEN REQUIREMENTS	T0.4b
CAL GREEN REQUIREMENTS	T0.5b
ARCHITECTURAL	
LIFE SAFETY PLAN	A1.0b
SLAB PLAN	A1.1b
NOTED FLOOR PLAN	A1.2b
DIMENSIONED FLOOR PLAN	A1.3b
ENLARGED FLOOR PLAN	A1.4b
ROOM AND STATION NUMBERING PLAN	A1.5b
REFLECTED CEILING PLAN	A2.0b
ROOF PLAN	A3.0b
COLORED EXTERIOR ELEVATIONS	A4.0b
EXTERIOR ELEVATIONS	A4.1b
EXTERIOR ELEVATIONS	A4.2b
INTERIOR ELEVATIONS	A5.0b
INTERIOR ELEVATIONS	A5.1b
BUILDING SECTIONS	A6.0b
BUILDING SECTIONS	A6.1b
FINISH PLAN	A7.0b
FINISH SCHEDULE	A7.1b
DOOR AND HARDWARE SCHEDULE	A8.0b
WINDOW SCHEDULE	A8.1b
DETAILS	A9.0b
DETAILS	A9.1b
DETAILS	A9.2b
DETAILS	A9.3b
DETAILS	A9.4b
DETAILS	A9.5b
DETAILS	A9.6b
DETAILS	A9.7b
PACIFIC LIFT DRAWINGS	
EQUIPMENT LAYOUT	Q-1.01
MECHANICAL	
MECHANICAL GENERAL NOTES, SYMBOLS & ABBREVIATIONS	M0.1b
MECHANICAL SCHEDULES	M0.2b
TITLE 24	M0.3b
TITLE 24	M0.4b
TITLE 24 ENVELOPE	M0.5b
MECHANICAL FLOOR PLAN	M1.1b
MECHANICAL ROOF PLAN	M1.2b
MECHANICAL SECTION VIEWS	M4.1b
MECHANICAL DETAILS	M5.1b
MECHANICAL DETAILS	M5.2b
MECHANICAL DETAILS	M5.3b
MECHANICAL PIPING SCHEMATICS	M6.1b
MECHANICAL CONTROLS	M7.1b
MECHANICAL CONTROLS	M7.2b
PLUMBING	
PLUMBING GENERAL NOTES, SYMBOLS & ABBREVIATIONS	P0.1b
PLUMBING FLOOR PLAN	P1.1b
PLUMBING PARTIAL FLOOR PLAN	P1.2b
PLUMBING ROOF PLAN	P1.3b
PLUMBING DETAILS	P5.1b
PLUMBING RISER DIAGRAMS	P7.1b
ELECTRICAL	
ELECTRICAL GENERAL NOTES, SYMBOLS & ABBREVIATIONS	E0.1b
ELECTRICAL GENERAL NOTES	E0.2b
ELECTRICAL FLOOR PLAN	E1.1b
LIGHTING PLAN	EL1.1b
LIGHTING PHOTOMETRICS	EL1.2b
ELECTRICAL DETAILS	E5.1b
ELECTRICAL DETAILS	E5.2b
ELECTRICAL SCHEDULES	E6.1b
ELECTRICAL PANEL SCHEDULES	E6.2b
ELECTRICAL PANEL SCHEDULES	E6.3b
ELECTRICAL SINGLE LINE DIAGRAM	E7.1b

VOLUME 1 - SITE DEVELOPMENT

TITLE	SHEET NO.
GENERAL INFORMATION	
COVER SHEET	C0.0a
SHEET INDEX	C0.1a
CALGREEN CHECK LIST	C0.2a
CALGREEN CHECK LIST	C0.3a
CALGREEN CHECK LIST	C0.4a
CIVIL PLANS	
TOPOGRAPHIC SURVEY AND DEMOLITION PLAN	C0.5a
TOPOGRAPHIC SURVEY AND DEMOLITION PLAN	C0.6a
TOPOGRAPHIC SURVEY AND DEMOLITION PLAN	C0.7a
TOPOGRAPHIC SURVEY AND DEMOLITION PLAN	C0.8a
OVERALL SITE PLAN	C1.0a
SITE PLAN	C1.1a
SITE PLAN	C1.2a
SITE PLAN	C1.3a
SITE PLAN	C1.4a
GRADING AND DRAINAGE PLAN	C2.0a
GRADING AND DRAINAGE PLAN	C2.1a
GRADING AND DRAINAGE PLAN	C2.2a
GRADING AND DRAINAGE PLAN	C2.3a
GRADING AND DRAINAGE PLAN	C2.4a
SITE UTILITY PLAN	C3.0a
SITE UTILITY PLAN	C3.1a
WATER PLAN AND PROFILE	C4.0a
WATER PLAN AND PROFILE	C4.1a
WATER PLAN AND PROFILE	C4.2a
WATER PLAN AND PROFILE	C4.3a
WATER TANK DETAILS	C5.0a
WATER TANK DETAILS	C5.1a
WATER TANK DETAILS	C5.2a
WATER TANK DETAILS	C5.3a
WATER TANK DETAILS	C5.4a
WATER TANK DETAILS	C5.5a
DETAILS	C6.0a
DETAILS	C6.1a
DETAILS	C6.2a
DETAILS	C6.3a
DETAILS	C6.4a
DETAILS	C6.5a
DETAILS	C6.6a
DETAILS	C6.7a
TRASH ENCLOSURE DETAILS	C6.8a
1 TRASH ENCLOSURE DETAILS	C6.9a
DETAILS	C6.10a
LANDSCAPE	
IRRIGATION PLAN	L1.0a
IRRIGATION PLAN	L1.1a
IRRIGATION DETAILS	L1.2a
IRRIGATION DETAILS	L1.3a
PLANTING PLAN	L2.0a
PLANTING PLAN	L2.1a
PLANTING DETAILS	L3.0a
ELECTRICAL	
ELECTRICAL SYMBOLS & ABBREVIATIONS	E0.1a
ELECTRICAL GENERAL NOTES	E0.2a
ELECTRICAL TITLE 24	E0.3a
1 ELECTRICAL TITLE 24	E0.4a
ELECTRICAL OVERALL SITE PLAN	E1.0a
1 ELECTRICAL PARTIAL SITE PLAN	E1.1a
ELECTRICAL PARTIAL SITE PLAN	E1.2a
ELECTRICAL PARTIAL SITE PLAN	E1.3a
ELECTRICAL PHOTOMETRIC SITE PLAN	E2.0a
ELECTRICAL DETAILS	E5.1a
ELECTRICAL DETAILS	E5.2a
1 ELECTRICAL DETAILS	E5.3a
ELECTRICAL DETAILS	E5.4a
ELECTRICAL DETAILS	E5.5a
ELECTRICAL LOAD CALCULATIONS	E6.1a
1 ELECTRICAL VOLTAGE DROP & FEEDER SCHEDULE	E6.2a
ELECTRICAL SINGLE LINE DIAGRAM	E7.1a

VOLUME 7 - STRUCTURAL, PEMB, FIRE PROTECTION

TITLE	SHEET NO.
GENERAL INFORMATION	
COVER SHEET	T0.0g
SHEET INDEX	T0.1g
STRUCTURAL	
GENERAL NOTES	S0.0g
PRE-ENGINEERED METAL BUILDING REACTIONS (FOR REFERENCE ONLY)	S0.1g
PRE-ENGINEERED METAL BUILDING REACTIONS	S0.2g
TYPICAL FOUNDATION DETAILS	S1.0g
TYPICAL CMU DETAILS	S1.1g
MAIN BUILDING FOUNDATION PLAN	S2.0g
GARAGE BUILDING FOUNDATION PLAN	S2.1g
HAZ-MAT CANOPY FOUNDATION PLAN	S2.2g
TRUCK CANOPY FOUNDATION PLAN	S2.3g
FUEL CANOPY FOUNDATION PLAN	S2.4g
BUILDING FOUNDATION DETAILS	S3.0g
CANOPY FOUNDATION DETAILS	S3.1g
GARAGE BUILDING DETAILS	S3.2g

TITLE	SHEET NO.
PRE-ENGINEERED METAL BUILDING PLANS	
ADMIN / PRE-FAB BUILDING	SK1.0 - PEMB 59
HAZ-MAT CANOPY	E1 - F3
TRUCK CANOPY	E1 - F3
FUEL CANOPY	E1 - F3
GARAGE BUILDING	C0.9 - SD9
FIRE ALARM PLANS (FOR REFERENCE)	
FIRE ALARM TITLE PAGE, OPERATION MATRIX, AND NOTES	FA-01
SITE MAPS AND VICINITY MAP	FA-02
ADMIN AND GARAGE BUILDING FIRE ALARM PLAN	FA-03
ADMIN FA RISER DIAGRAM/VOLTAGE DROP/BATTERY CALCULATION	FA-04
GARAGE FA RISER DIAGRAM/VOLTAGE DROP/BATTERY CALCULATION	FA-05
FIRE ALARM INSTALLATION DETAILS	FA-06
FIRE ALARM INSTALLATION DETAILS	FA-07
FIRE SPRINKLER PLANS (FOR REFERENCE)	
SITE PLAN	FP-1
FIRE SPRINKLER PIPING PLAN, CROSS-SECTION, & DETAILS	FP-2

NO.	REVISIONS	DATE	SAP WO	SUPV	APPROVED	ENGR	CK'D	MADE	P.E.
1	ADDENDUM #1	03-19-2021				PN	PN	JR	PN
2	ENVIRONMENTAL HEALTH PLAN CHECK REVISIONS	06-18-2021				PN	PN	JR	PN
3	ADDENDUM #2	12-03-2021				PN	PN	JR	PN
4	ADDENDUM #3	02-18-2022				PN	PN	JR	PN

REFERENCE DRAWINGS | REFERENCE DRAWINGS

PLANS PREPARED BY:
Blair, Church & Flynn
CONSULTING ENGINEERS
451 Clovis Avenue, Suite 200
Clovis, California 93612
Tel (559) 326-1400
Fax (559) 326-1500

REGISTERED PROFESSIONAL ENGINEER PAIGE E. NOGA No. 78,395 CIVIL STATE OF CALIFORNIA
12/3/2021 Date Signed:

LOCATION: BISHOP, CALIFORNIA

BISHOP SERVICE CENTER
SITE DEVELOPEMENT
SHEET INDEX
VOLUME 1

SOUTHERN CALIFORNIA EDISON An EDISON INTERNATIONAL Company

SHEET NO. C0.1a
SCALE: N/A
2 OF 66 SHTS.

100% CONSTRUCTION DOCUMENTS (12-03-2021)

Drawing: P:\219-0301\Site\productiondrawings\01 - Site\219301_T0.1a_Sheet Index.dwg; C0.1a Sheet Index - BCF.ctb
Plot by: jredelfs Feb 23, 2022 - 7:25am

SOUTHERN CALIFORNIA EDISON
2012 - 5 SIZE

CALGREEN VERIFICATION GUIDELINES MANDATORY CHECKLIST

CHAPTER 5 DIVISIONS		SECTION TITLE	CODE SECTION	Y	N/A	O	PLAN SHEET, SPEC, OR ATTACH REFERENCE
(continued) **DIVISION 5.5 Environmental Quality**	Mandatory	Outside air delivery	5.506.1	X			M SERIES
	Mandatory	Carbon dioxide (CO_2) monitoring	5.506.2	X			M SERIES
	Mandatory	Acoustical control (with exception)	5.507.4	X			A SERIES
	Mandatory	Exterior noise transmission, prescriptive method (with exceptions)	5.507.4.1		X		
	Mandatory	Noise exposure where noise contours are not readily available	5.507.4.1.1		X		
	Mandatory	Performance method	5.507.4.2		X		
	Mandatory	Site features	5.507.4.2.1		X		
	Mandatory	Documentation of compliance	5.507.4.2.2		X		
	Mandatory	Interior sound transmission (with note)	5.507.4.3		X		
	Mandatory	Ozone depletion and greenhouse gas reductions	5.508.1	X			M SERIES
	Mandatory	Chlorofluorocarbons (CFCs)	5.508.1.1	X			M SERIES
	Mandatory	Halons	5.508.1.2		X		
	Mandatory	Supermarket refrigerant leak reduction for retail food stores 8,000 square feet or more Sections 5.508.2 through 5.508.2.6.3	5.508.2 through 5.508.2.6.3		X		
		END OF MANDATORY PROVISIONS					

Documentation Author's / Responsible Designer's Declaration Statement

☒ **Mandatory:** I attest that this mandatory provisions checklist is accurate and complete.

Signature: ADD SIGNATURE WHEN MEP HAVE CONFIRMED COMPLIANCE WITH MANDATORY MEASURES.	
Company: BLAIR, CHURCH AND FLYNN CONSULTING ENGINEERS	Date: 01/24/2020
Address: 451 CLOVIS AVE. SUITE 200	License: 78,395
City/State/Zip: CLOVIS, CA 93612	Phone: (559) 326-1400

INTERNATIONAL CODE COUNCIL® Copyright © 2019 ICC. ALL RIGHTS RESERVED. Accessed by Miranda Harrison (mharrison@bcf-engr.com), (-) Order Number #100836682 on Feb 13, 2020 08:33 AM (PST) pursuant to License Agreement with ICC. No further reproduction, no further reproductions by any third party, or distribution authorized. Single user only, copying and networking prohibited. ANY UNAUTHORIZED REPRODUCTION OR DISTRIBUTION IS A VIOLATION OF THE FEDERAL COPYRIGHT ACT AND THE LICENSE AGREEMENT, AND SUBJECT TO CIVIL AND CRIMINAL PENALTIES THEREUNDER.

CHAPTER 5 DIVISIONS		SECTION TITLE	CODE SECTION	Y	N/A	O	PLAN SHEET, SPEC, OR ATTACH REFERENCE
(continued) **DIVISION 5.4 Material Conservation and Resource Efficiency**	Mandatory	Commissioning plan [N]	5.410.2.3	X			**MPE & LANDSCAPE PLANS + COMMISSIONING AGENT REPORTS
	Mandatory	Functional performance testing [N]	5.410.2.4	X			
	Mandatory	Documentation and training [N]	5.410.2.5	X			
	Mandatory	Systems manual [N]	5.410.2.5.1	X			
	Mandatory	Systems operation training [N]	5.410.2.5.2	X			
	Mandatory	Commissioning report [N]	5.410.2.6	X			
	Mandatory	Testing and adjusting for new buildings < 10,000 sf or new systems that serve additions or alterations [A]	5.410.4		X		
	Mandatory	System testing plan for renewable energy, landscape irrigation and water reuse [A]	5.410.4.2		X		
	Mandatory	Procedures for testing and adjusting	5.410.4.3		X		
	Mandatory	Procedures for HVAC balancing	5.410.4.3.1		X		
	Mandatory	Reporting for testing and adjusting	5.410.4.4		X		
	Mandatory	Operation and maintenance (O&M) manual	5.410.4.5	X			T SERIES
	Mandatory	Inspection and reports	5.410.4.5.1		X		
DIVISION 5.5 Environmental Quality (continued)	Mandatory	Fireplaces	5.503.1		X		
	Mandatory	Woodstoves	5.503.1.1		X		
	Mandatory	Temporary ventilation	5.504.1		X		
	Mandatory	Covering of ducts openings and protection of mechanical equipment during construction	5.504.3	X			M SERIES
	Mandatory	Adhesives, sealants, and caulks	5.504.4.1	X			
	Mandatory	Paints and coatings	5.504.4.3	X			
	Mandatory	Aerosol paints and coatings	5.504.4.3.1	X			
	Mandatory	Aerosol paints and coatings: verification	5.504.4.3.2	X			
	Mandatory	Carpet systems	5.504.4.4	X			
	Mandatory	Carpet cushion	5.504.4.4.1	X			T&A SERIES AND SPEC BOOK
	Mandatory	Carpet adhesives per Table 5.504.4.1	5.504.4.4.2	X			
	Mandatory	Composite wood products	5.504.4.5	X			
	Mandatory	Composite wood products: documentation	5.504.4.5.3	X			
	Mandatory	Resilient flooring systems	5.504.4.6	X			
	Mandatory	Resilient flooring: verification of compliance	5.504.4.6.1	X			
	Mandatory	Filters (with exceptions)	5.504.5.3	X			
	Mandatory	Filters: labeling	5.504.5.3.1	X			
	Mandatory	Environmental tobacco smoke (ETS) control	5.504.7	X			
	Mandatory	Indoor moisture control	5.505.1	X			

(continued)

INTERNATIONAL CODE COUNCIL® Copyright © 2019 ICC. ALL RIGHTS RESERVED. Accessed by Miranda Harrison (mharrison@bcf-engr.com), (-) Order Number #100836682 on Feb 13, 2020 08:33 AM (PST) pursuant to License Agreement with ICC. No further reproduction, no further reproductions by any third party, or distribution authorized. Single user only, copying and networking prohibited. ANY UNAUTHORIZED REPRODUCTION OR DISTRIBUTION IS A VIOLATION OF THE FEDERAL COPYRIGHT ACT AND THE LICENSE AGREEMENT, AND SUBJECT TO CIVIL AND CRIMINAL PENALTIES THEREUNDER.

CHAPTER 5 DIVISIONS		SECTION TITLE	CODE SECTION	Y	N/A	O	PLAN SHEET, SPEC, OR ATTACH REFERENCE
(continued) **DIVISION 5.3 Water Efficiency and Conservation**	Mandatory	Wall-mounted urinals shall not exceed 0.125 gpf	5.303.3.2.1	X			PLUMBING
	Mandatory	Floor-mounted urinals shall not exceed 0.5 gpf	5.303.3.2.2		X		
	Mandatory	Single showerhead shall have maximum flow rate of 1.8 gpm (gallons per minute) at 80 psi	5.303.3.3.1		X		
	Mandatory	Multiple showerheads serving one shower shall have a combined flow rate of 1.8 gpm at 80 psi	5.303.3.3.2	X			PLUMBING
	Mandatory	Nonresidential lavatory faucets	5.303.3.4.1	X			PLUMBING
	Mandatory	Kitchen faucets	5.303.3.4.2	X			PLUMBING
	Mandatory	Wash fountains	5.303.3.4.3		X		
	Mandatory	Metering faucets	5.303.3.4.4		X		
	Mandatory	Metering faucets for wash fountains	5.303.3.4.5		X		
	Mandatory	Food waste disposers	5.303.4.1		X		
	Mandatory	Areas of additions or alterations	5.303.5		X		
	Mandatory	Standards for plumbing fixtures and fittings	5.303.6	X			PLUMBING
	Mandatory	Outdoor potable water use in landscape areas (with notes)	5.304.1	X			'L' SERIES
	Mandatory	Outdoor water supply systems (with Exceptions 1-4)	5.305.1.1		X		
	Mandatory	Technical requirements for outdoor recycled water supply systems	5.305.1.2		X		
DIVISION 5.4 Material Conservation and Resource Efficiency (continued)	Mandatory	Weather protection	5.407.1	X			'A' SERIES
	Mandatory	Moisture control: sprinklers	5.407.2.1	X			'L' SERIES
	Mandatory	Moisture control: exterior door protection	5.407.2.2.1	X			'A' SERIES
	Mandatory	Moisture control: flashing	5.407.2.2.2	X			'A' SERIES
	Mandatory	Construction waste management—comply with either: Sections 5.408.1.1, 5.408.1.2, 5.408.1.3 or more stringent local ordinance	5.408.1.1, 5.408.1.2, 5.408.1.3	X			G.C. TO COMPLY. SEE REQUIREMENT ON C0.3a & T0.4a
	Mandatory	Construction waste management: documentation	5.408.1.4	X			
	Mandatory	Universal waste [A]	5.408.2		X		
	Mandatory	Excavated soil and land clearing debris (100% reuse or recycle)	5.408.3	X			
	Mandatory	Recycling by occupants (with exception)	5.410.1	X			FLOOR PLAN
	Mandatory	Recycling by occupants: additions (with exception)	5.410.1.1		X		
	Mandatory	Recycling by occupants: sample ordinance	5.410.1.2		X		
	Mandatory	Commissioning new buildings (≥ 10,000 sf) [N]	5.410.2	X			ADMIN BUILDING ONLY.SEE MECHANICAL
	Mandatory	Owner's or owner representative's Project Requirements (OPR) [N]	5.410.2.1	X			
	Mandatory	Basis of Design (BOD) [N]	5.410.2.2	X			

(continued)

INTERNATIONAL CODE COUNCIL® Copyright © 2019 ICC. ALL RIGHTS RESERVED. Accessed by Miranda Harrison (mharrison@bcf-engr.com), (-) Order Number #100836682 on Feb 13, 2020 08:33 AM (PST) pursuant to License Agreement with ICC. No further reproduction, no further reproductions by any third party, or distribution authorized. Single user only, copying and networking prohibited. ANY UNAUTHORIZED REPRODUCTION OR DISTRIBUTION IS A VIOLATION OF THE FEDERAL COPYRIGHT ACT AND THE LICENSE AGREEMENT, AND SUBJECT TO CIVIL AND CRIMINAL PENALTIES THEREUNDER.

A5.602
***CALGreen* VERIFICATION GUIDELINES**
MANDATORY MEASURES CHECKLIST

Application: This checklist shall be used for nonresidential projects that meet one of the following: new construction, building additions of 1,000 square feet or greater, or building alterations with a permit valuation of $200,000 or more pursuant to Section 301.3 AND do not trigger a Tier 1 or Tier 2 requirement:

Y = Yes (section has been selected and/or included)
N/A = Not Applicable (code section does not apply to the project—mainly used for additions and alterations)
O = Other (provide explanation)
[N] = New construction pursuant to Section 301.3
[A] = Additions and/or Alterations pursuant to Section 301.3

CHAPTER 5 DIVISIONS		SECTION TITLE	CODE SECTION	Y	N/A	O	PLAN SHEET, SPEC, OR ATTACH REFERENCE
DIVISION 5.1 Planning and Design	Mandatory	Storm water pollution prevention for projects that disturb less than 1 acre of land	5.106.1 through 5.106.2		X		
	Mandatory	Short-term bicycle parking (with exception)	5.106.4.1.1	X			C1.1a
	Mandatory	Long-term bicycle parking	5.106.4.1.2 through 5.106.4.1.5	X			C1.1a
	Mandatory	Designated parking for clean air vehicles	5.106.5.2	X			C1.1a
	Mandatory	Parking stall marking	5.106.5.2.1	X			C1.1a
	Mandatory	Single charging space requirements	5.106.5.3.1		X		
	Mandatory	Multiple charging space requirements [N]	5.106.5.3.2	X			C1.1a
	Mandatory	EV charging space calculation [N] (with exceptions)	5.106.5.3.3	X			C1.1a
	Mandatory	[N] Identification	5.106.5.3.4	X			
	Mandatory	[N] Future charging spaces	5.106.5.3.5	X			C1.1a
	Mandatory	Light pollution reduction [N] (with exceptions and notes)	5.106.8	X			ELECTRICAL
	Mandatory	Grading and paving (exception for additions and alterations not altering the drainage path)	5.106.10	X			C2.- SERIES
DIVISION 5.2 Energy Efficiency	Mandatory	Meet the minimum energy efficiency standard	5.201.1	X			SEE T24 SHEETS
DIVISION 5.3 Water Efficiency and Conservation (continued)	Mandatory	Separate meters (new buildings or additions > 50,000 sf that consume more than 100 gal/day)	5.303.1.1		X		
	Mandatory	Separate meters (for tenants in new buildings or additions that consume more than 1,000 gal/day)	5.303.1.2		X		
	Mandatory	Water closets shall not exceed 1.28 gallons per flush (gpf)	5.303.3.1	X			PLUMBING

(continued)

INTERNATIONAL CODE COUNCIL® Copyright © 2019 ICC. ALL RIGHTS RESERVED. Accessed by Miranda Harrison (mharrison@bcf-engr.com), (-) Order Number #100836682 on Feb 13, 2020 08:33 AM (PST) pursuant to License Agreement with ICC. No further reproduction, no further reproductions by any third party, or distribution authorized. Single user only, copying and networking prohibited. ANY UNAUTHORIZED REPRODUCTION OR DISTRIBUTION IS A VIOLATION OF THE FEDERAL COPYRIGHT ACT AND THE LICENSE AGREEMENT, AND SUBJECT TO CIVIL AND CRIMINAL PENALTIES THEREUNDER.

REGISTERED PROFESSIONAL ENGINEER PAIGE E. NOGA No. 78,395 CIVIL STATE OF CALIFORNIA

12/3/2021 Date Signed:

PLANS PREPARED BY:
Blair, Church & Flynn
CONSULTING ENGINEERS
451 Clovis Avenue, Suite 200
Clovis, California 93612
Tel (559) 326-1400
Fax (559) 326-1500

NO.	REVISIONS	DATE	SAP WO	SUPV	APPROVED	ENGR	CK'D	MADE	P.E.
1	ADDENDUM #1	03-19-2021				PN	PN	JR	PN
2	ENVIRONMENTAL HEALTH PLAN CHECK REVISIONS	06-18-2021				PN	PN	JR	PN
3	ADDENDUM #2	12-03-2021				PN	PN	JR	PN
4	ADDENDUM #3	02-18-2022				PN	PN	JR	PN

REFERENCE DRAWINGS | REFERENCE DRAWINGS | NO. | REVISIONS | DATE | SAP WO | SUPV | APPROVED | ENGR | CK'D | MADE | P.E.

LOCATION: BISHOP, CALIFORNIA

BISHOP SERVICE CENTER
SITE DEVELOPEMENT
CALGREEN CHECK LIST

VOLUME 1

SOUTHERN CALIFORNIA EDISON An EDISON INTERNATIONAL Company

SHEET NO. C0.2a

SCALE: N/A

3 OF 66 SHTS.

100% CONSTRUCTION DOCUMENTS (12-03-2021)

Drawing: P:\219-0301\Site\productiondrawings\01 - Site\219301_T0.2a_CalGreen Checklist.dwg; C0.2a CalGreen Check List - BCF.ctb
Plot by: jredelfs Feb 23, 2022 - 7:25am

SOUTHERN CALIFORNIA EDISON
2012 - 5 SIZE

CALGREEN VERIFICATION GUIDELINES MANDATORY CHECKLIST

NOTE: REFER TO THE UNIVERSAL WASTE RULE LINK AT: HTTP://WWW.DTSC.CA.GOV/LAWSREGSPOLICIES/REGS/UPLOAD/OEAR-A_REGS_UWR_FINALTECT.PDF

5.408.3 EXCAVATED SOIL AND LAND CLEARING DEBRIS. 100 PERCENT OF TREES, STUMPS, ROCKS AND ASSOCIATED VEGETATION AND SOILS RESULTING PRIMARILY FROM LAND CLEARING SHALL BE REUSED OR RECYCLED. FOR A PHASED PROJECT, SUCH MATERIAL MAY BE STOCKPILED ON SITE UNTIL THE STORAGE SITE IS DEVELOPED.

EXCEPTION: REUSE, EITHER ON OR OFF-SITE, OF VEGETATION OR SOIL CONTAMINATED BY DISEASE OR PEST INFESTATION.

NOTES:
1. IF CONTAMINATION BY DISEASE OR PEST INFESTATION IS SUSPECTED, CONTACT THE COUNTY AGRICULTURAL COMMISSIONER AND FOLLOW ITS DIRECTION FOR RECYCLING OR DISPOSAL OF THE MATERIAL.
2. FOR A MAP OF KNOW PEST AND/OR DISEASE QUARANTINE ZONES, CONSULT WITH THE CALIFORNIA DEPARTMENT OF FOOD AND AGRICULTURE. (WWW.CDFA.CA.GOV)

SECTION 5.410 BUILDING MAINTENANCE AND OPERATIONS
5.410.1 RECYCLING BY OCCUPANTS. PROVIDE READILY ACCESSIBLE AREAS THAT SERVE THE ENTIRE BUILDING AND ARE IDENTIFIED FOR THE DEPOSITING, STORAGE AND COLLECTION OF NON-HAZARDOUS MATERIALS FOR RECYCLING, INCLUDING (AT A MINIMUM) PAPER, CORRUGATED CARDBOARD, GLASS, PLASTICS, ORGANIC WASTE, AND METALS OR MEET A LAWFULLY ENACTED LOCAL RECYCLING ORDINANCE, IF MORE RESTRICTIVE.

EXCEPTION: RURAL JURISDICTIONS THAT MEET AND APPLY FOR THE EXEMPTION IN PUBLIC RESOURCES CODE 42649.82 (A)(2)(A) ET SEQ. SHALL ALSO BE EXEMPT FROM THE ORGANIC WASTE PORTION OF THIS SECTION.

5.410.1.1 ADDITIONS. ALL ADDITIONS CONDUCTED WITHIN A 12-MONTH PERIOD UNDER SINGLE OR MULTIPLE PERMITS RESULTING IN AN INCREASE OF 30% OR MORE IN FLOOR AREA, SHALL PROVIDE RECYCLING AREAS ON SITE.

EXCEPTION: ADDITIONS WITHIN A TENANT SPACE RESULTING IN LESS THAN A 30% INCREASE IN THE TENANT SPACE FLOOR AREA

5.410.1.2 SAMPLE ORDINANCE. SPACE ALLOCATION FOR RECYCLING AREAS SHALL COMPLY WITH CHAPTER 18, PART 3, DIVISION 30 OF THE PUBLIC RESOURCES CODE. CHAPTER 18 IS KNOWN AS THE CALIFORNIA SOLID WASTE REUSE AND RECYCLING ACCESS ACT OF 1991 (ACT).

NOTES: A SAMPLE ORDINANCE FOR USE BY LOCAL AGENCIES MAY BE FOUND IN APPENDIX A OF THE DOCUMENT AT THE CALRECYCLE'S WEB SITE.

5.410.2 COMMISSIONING. [N] NEW BUILDING 10,000 SQUARE FEET AND OVER. FOR NEW BUILDINGS 10,000 SQUARE FEET AND OVER, BUILDING COMMISSIONING SHALL BE INCLUDED IN THE DESIGN AND CONSTRUCTION PROCESSES OF THE BUILDING PROJECT TO VERIFY THAT THE BUILDING SYSTEMS AND COMPONENTS MEET THE OWNER'S OR OWNER REPRESENTATIVE'S PROJECT REQUIREMENTS. COMMISSIONING SHALL BE PERFORMED IN ACCORDANCE WITH THIS SECTION BY TRAINED PERSONNEL WITH EXPERIENCE ON PROJECTS OF COMPARABLE SIZE AND COMPLEXITY. FOR I-OCCUPANCIES THAT ARE NOT REGULATED BY OSHPD OR FOR I-OCCUPANCIES AND L-OCCUPANCIES THAT ARE NOT REGULATED BY THE CALIFORNIA ENERGY CODE SECTION 100.0 SCOPE, ALL REQUIREMENTS IN SECTIONS 5.410.2 THROUGH 5.410.2.6 SHALL APPLY.

NOTE: FOR ENERGY-RELATED SYSTEMS UNDER THE SCOPE (SECTION 100) OF THE CALIFORNIA ENERGY CODE, INCLUDING HEATING. VENTILATION, AIR CONDITIONING (HVAC) SYSTEMS AND CONTROLS, INDOOR LIGHTING SYSTEMS AND CONTROLS, AS WELL AS WATER HEATING SYSTEMS AND CONTROLS, REFER TO CALIFORNIA ENERGY CODE SECTION 120.8 FOR COMMISSIONING REQUIREMENTS.

COMMISSIONING REQUIREMENTS SHALL REQUIRE:

1. OWNER'S OR OWNER REPRESENTATIVE'S PROJECT REQUIREMENTS.
2. BASIS OF DESIGN.
3. COMMISSIONING MEASURES SHOWN IN THE CONSTRUCTION DOCUMENTS.
4. COMMISSIONING PLAN.
5. FUNCTIONAL PERFORMANCE TESTING.
6. DOCUMENTATION AND TRAINING.
7. COMMISSIONING REPORT.

EXCEPTIONS:

1. UNCONDITIONED WAREHOUSES OF ANY SIZE.
2. AREAS LESS THAN 10,000 SQUARE FEET USED FOR OFFICES OR OTHER CONDITIONED ACCESSORY SPACES WITHIN UNCONDITIONED WAREHOUSES.
3. TENANT IMPROVEMENTS LESS THAN 10,000 SQUARE FEET AS DESCRIBED IN SECTION 303.1.1.
4. OPEN PARKING GARAGES OF ANY SIZE, OR OPEN PARKING GARAGE AREAS, OF ANY SIZE, WITHIN A STRUCTURE.

NOTES: FOR THE PURPOSES OF THIS SECTION, UNCONDITIONED SHALL MEAN A BUILDING, AREA, OR ROOM, WHICH DOES NOT PROVIDE HEATING OR AIR CONDITIONING.
INFORMATIONAL NOTES:

1. IAS AC 476 IS AN ACCREDITATION CRITERIA FOR ORGANIZATIONS PROVIDING TRAINING AND/OR CERTIFICATION OF COMMISSIONING PERSONNEL. AC 476 IS AVAILABLE TO THE AUTHORITY HAVING JURISDICTION AS A REFERENCE FOR QUALIFICATIONS OF COMMISSIONING PERSONNEL. AC 476 DOES NOT CERTIFY INDIVIDUALS TO CONDUCT FUNCTIONAL PERFORMANCE TESTS OR TO ADJUST AND BALANCE SYSTEMS.
2. FUNCTIONAL PERFORMANCE TESTING FOR HEATING, VENTILATION, AIR CONDITIONING SYSTEMS AND LIGHTING CONTROLS MUST BE PERFORMED IN COMPLIANCE WITH THE CALIFORNIA ENERGY CODE.

5.410.2.1 OWNER'S OR OWNER REPRESENTATIVE'S PROJECT REQUIREMENTS (OPR). [N] THE EXPECTATIONS AND REQUIREMENTS OF THE BUILDING APPROPRIATE TO ITS PHASE SHALL BE DOCUMENTED BEFORE THE DESIGN PHASE OF THE PROJECT BEGINS. THIS DOCUMENTATION SHALL INCLUDE THE FOLLOWING:
1. ENVIRONMENTAL AND SUSTAINABILITY GOALS.
2. BUILDING SUSTAINABLE GOALS.
3. INDOOR ENVIRONMENTAL QUALITY REQUIREMENTS.
4. PROJECT PROGRAMS, INCLUDING FACILITY FUNCTIONS AND HOURS OF OPERATION, AND NEED FOR AFTER HOURS OPERATION.
5. EQUIPMENT AND SYSTEMS EXPECTATIONS.
6. BUILDING OCCUPANT AND OPERATION AND MAINTENANCE (O&M) PERSONNEL EXPECTATIONS.

5.410.2.2 BASIS OF DESIGN (BOD). [N] A WRITTEN EXPLANATION OF HOW THE DESIGN OF THE BUILDING SYSTEMS MEETS THE OPR SHALL BE COMPLETED AT THE DESIGN PHASE OF THE BUILDING PROJECT. THE BASIS OF DESIGN DOCUMENT SHALL COVER THE FOLLOW SYSTEMS:

1. RENEWABLE ENERGY SYSTEMS
2. LANDSCAPE IRRIGATION SYSTEMS
3. WATER REUSE SYSTEMS

5.410.2.3 COMMISSIONING PLAN. [N] PRIOR TO PERMIT ISSUANCE A COMMISSIONING PLAN SHALL BE COMPLETED TO DOCUMENT HOW THE PROJECT WILL COMMISSIONED. THE COMMISSIONING PLAN SHALL INCLUDE THE FOLLOWING:
1. GENERAL PROJECT INFORMATION
2. COMMISSIONING GOALS.
3. SYSTEMS TO BE COMMISSIONED. PLANS TO TEST SYSTEMS AND COMPONENTS SHALL INCLUDE:
   A. AN EXPLANATION OF THE ORIGINAL DESIGN INTENT.
   B. EQUIPMENT AND SYSTEMS TO BE TESTED, INCLUDING THE EXTENT OF TESTS.
   C. FUNCTIONS TO BE TESTED.
   D. CONDITIONS UNDER WHICH THE TEST SHALL BE PERFORMED.
   E. MEASURABLE CRITERIA FOR ACCEPTABLE PERFORMANCE.
1. COMMISSIONING TEAM INFORMATION.
2. COMMISSIONING PROCESS ACTIVITIES, SCHEDULES AND RESPONSIBILITIES. PLANS FOR THE COMPLETION OF COMMISSIONING SHALL BE INCLUDED.

5.410.2.4 FUNCTIONAL PERFORMANCE TESTING. [N] FUNCTIONAL PERFORMANCE TESTS SHALL DEMONSTRATE THE CORRECT INSTALLATION AND OPERATION OF EACH COMPONENT, SYSTEM AND SYSTEM-TO-SYSTEM INTERFACE IN ACCORDANCE WITH THE APPROVED PLANS AND SPECIFICATIONS. FUNCTIONAL PERFORMANCE TESTING REPORTS SHALL CONTAIN INFORMATION ADDRESSING EACH OF THE BUILDING COMPONENTS TESTED, THE TESTING METHODS UTILIZED, AND INCLUDE ANY READINGS AND ADJUSTMENTS MADE.

5.410.2.5 DOCUMENTATION AND TRAINING. [N] A SYSTEMS MANUAL AND SYSTEMS OPERATIONS TRAINING ARE REQUIRED, INCLUDING OCCUPATIONAL SAFETY AND HEALTH ACT (OSHA) REQUIREMENTS IN CALIFORNIA CODE OF REGULATIONS (CCR), TITLE 8, SECTION 5142, AND OTHER RELATED REGULATIONS.

5.303.3.4.5 METERING FAUCETS FOR WASH FOUNTAINS. METERING FAUCETS FOR WASH FOUNTAINS SHALL HAVE MAXIMUM FLOW RATE OF NOT MORE THAN 0.20 GALLONS PER MINUTE/20 [RIM SPACE (INCHES) AT 60 PSI].

NOTE: WHERE COMPLYING FAUCETS ARE UNAVAILABLE, AERATORS OR OTHER MEANS MAY BE USED TO ACHIEVE REDUCTION.

5.303.4 COMMERCIAL KITCHEN EQUIPMENT.

5.303.4.1 FOOD WASTE DISPOSERS. DISPOSERS SHALL EITHER MODULATE THE USE OF WATER TO NO MORE THAN 1 GPM WHEN THE DISPOSER IS NOT IN USE (NOT ACTIVELY GRINDING FOOD WASTE/NO-LOAD) OR SHALL AUTOMATICALLY SHUT OFF AFTER NO MORE THAN 10 MINUTES OF INACTIVITY. DISPOSERS SHALL USE NO MORE THAN 8 GPM OF WATER.

THIS CODE SECTION DOES NOT AFFECT LOCAL JURISDICTION AUTHORITY TO PROHIBIT OR REQUIRE DISPOSER INSTALLATION.

5.303.5 AREAS OF ADDITION OR ALTERATION. FOR THOSE OCCUPANCIES WITHIN THE AUTHORITY OF THE CALIFORNIA BUILDING STANDARDS COMMISSION AS SPECIFIED IN SECTION 103, THE PROVISIONS OF SECTION 5.303.3 AND 5.303.4 SHALL APPLY TO NEW FIXTURES IN ADDITIONS OR AREAS OF ALTERATION TO THE BUILDING.

5.303.6 STANDARDS FOR PLUMBING FIXTURES AND FITTINGS. PLUMBING FIXTURES AND FITTINGS SHALL BE INSTALLED IN ACCORDANCE WITH THE CALIFORNIA PLUMBING CODE, AND SHALL MEET THE APPLICABLE STANDARDS REFERENCED IN TABLE 1701.1 OF THE CALIFORNIA PLUMBING CODE AND IN CHAPTER 6 OF THIS CODE.

SECTION 5.304 OUTDOOR WATER USE
5.304.1 OUTDOOR PORTABLE WATER USE IN LANDSCAPE AREAS. NONRESIDENTIAL DEVELOPMENTS SHALL COMPLY WITH A LOCAL WATER EFFICIENT LANDSCAPE ORDINANCE OR THE CURRENT CALIFORNIA DEPARTMENT OF WATER RESOURCES' MODEL WATER EFFICIENT LANDSCAPE ORDINANCE (MWELO), WHICHEVER IS MORE STRINGENT.

NOTE:
1. THE MODEL WATER EFFICIENT LANDSCAPE ORDINANCE (MWELO) IS LOCATED IN THE CALIFORNIA CODE OF REGULATIONS, TITLE 23, CHAPTER 2.7, DIVISION 2.
2. MWELO AND SUPPORTING DOCUMENTS, INCLUDING A WATER BUDGET CALCULATOR, ARE AVAILABLE AT: HTTP://WWW.WATER.CA.GOV/.

5.304.6 OUTDOOR PORTABLE WATER USE IN LANDSCAPE AREAS. FOR PUBLIC SCHOOLS AND COMMUNITY COLLEGES, LANDSCAPE PROJECTS AS DESCRIBED IN SECTIONS 5.304.56.1 AND 5.304.6.2 SHALL COMPLY WITH THE CALIFORNIA DEPARTMENT OF WATER RESOURCES MODEL WATER EFFICIENT LANDSCAPE ORDINANCE (MWELO) COMMENCING WITH SECTION 490 OF CHAPTER 2.7, DIVISION 2, TITLE 23, CALIFORNIA CODE OF REGULATIONS, EXCEPT THAT THE EVAPOTRANSPIRATION ADJUSTMENT FACTOR (ETAF) SHALL BE 0.65 WITH AN ADDITIONAL WATER ALLOWANCE FOR SPECIAL LANDSCAPE AREAS (SLA) OF 0.35

EXCEPTION: ANY PROJECT WITH A AGGREGATE LANDSCAPE AREA OF 2,500 SQUARE FEET OR LESS MAY COMPLY WITH THE PRESCRIPTIVE MEASURES CONTAINED IN APPENDIX D OF THE MWELO.

5.304.6.1 NEWLY CONSTRUCTED LANDSCAPES. NEW CONSTRUCTION PROJECTS WITH AN AGGREGATE LANDSCAPE AREA EQUAL TO OR GREATER THAN 500 SQUARE FEET.

5.304.6.2 REHABILITATED LANDSCAPES. REHABILITATED LANDSCAPE PROJECTS WITH AN AGGREGATE LANDSCAPE AREA EQUAL TO OR GREATER THAN 1,200 SQUARE FEET.

SECTION 5.407 WATER RESISTANCE AND MOISTURE MANAGEMENT
5.407.1 WEATHER PROTECTION. PROVIDE A WEATHER-RESISTANT EXTERIOR WALL AND FOUNDATION ENVELOPE AS REQUIRED BY CALIFORNIA BUILDING CODE SECTION 1402.2 (WEATHER PROTECTION), MANUFACTURER'S INSTALLATION INSTRUCTIONS OR LOCAL ORDINANCE, WHICHEVER IS MORE STRINGENT.

5.407.2 MOISTURE CONTROL. EMPLOY MOISTURE CONTROL MEASURES BY THE FOLLOWING METHODS.

5.407.2.1 SPRINKLERS. DESIGN AND MAINTAIN LANDSCAPE IRRIGATION SYSTEMS TO PREVENT SPRAY ON STRUCTURES.

5.407.2.2 ENTRIES AND OPENINGS. DESIGN EXTERIOR ENTRIES AND/OR OPENINGS SUBJECT TO FOOT TRAFFIC OR WIND-DRIVEN RAIN TO PREVENT WATER INTRUSION INTO BUILDINGS AS FOLLOWS:

5.407.2.2.1 EXTERIOR DOOR PROTECTION. PRIMARY EXTERIOR ENTRIES SHALL BE COVERED TO PREVENT WATER INTRUSION BY USING NONABSORBENT FLOOR AND WALL FINISHES WITHIN AT LEAST 2 FEET AROUND AND PERPENDICULAR TO SUCH OPENINGS PLUS AT LEAST ONE OF THE FOLLOWING:

1. AN INSTALLED AWNING AT LEAST 4 FEET IN DEPTH.
2. THE DOOR IS PROTECTED BY A ROOF OVERHANG AT LEAST 4 FEET IN DEPTH.
3. THE DOOR IS RECESSED AT LEAST 4 FEET.
4. OTHER METHODS WHICH PROVIDE EQUIVALENT PROTECTION.

5.407.2.2.2 FLASHING. INSTALL FLASHINGS INTEGRATED WITH A DRAINAGE PLANE.

SECTION 5.408 CONSTRUCTION WASTE REDUCTION, DISPOSAL AND RECYCLING
5.408.1 CONSTRUCTION WASTE MANAGEMENT. RECYCLE AND/OR SALVAGE FOR REUSE A MINIMUM OF 65% OF THE NON-HAZARDOUS CONSTRUCTION AND DEMOLITION WASTE IN ACCORDANCE WITH SECTION 5.408.1.1, 5.408.1.2 OR 5.408.1.3; OR MEET A LOCAL CONSTRUCTION AND DEMOLITION WASTE MANAGEMENT ORDINANCE, WHICHEVER IS MORE STRINGENT.

5.408.1.1 CONSTRUCTION WASTE MANAGEMENT PLAN. WHERE A LOCAL JURISDICTION DOES NOT HAVE A CONSTRUCTION AND DEMOLITION WASTE MANAGEMENT ORDINANCE, SUBMIT A CONSTRUCTION WASTE MANAGEMENT PLAN THAT:

1. IDENTIFIES THE CONSTRUCTION AND DEMOLITION WASTE MATERIALS TO BE DIVERTED FROM DISPOSAL BY EFFICIENT USAGE, RECYCLING, REUSE ON THE PROJECT OR SALVAGE FOR FUTURE USE OR SALE.
2. DETERMINES IF CONSTRUCTION AND DEMOLITION WASTE MATERIALS WILL BE SORTED ON-SITE (SOURCE-SEPARATED) OR BULK MIXED (SINGLE STREAM).
3. IDENTIFIES DIVERSION FACILITIES WHERE CONSTRUCTION AND DEMOLITION WASTE MATERIAL COLLECTED WILL BE TAKEN.
4. SPECIFIES THAT THE AMOUNT OF CONSTRUCTION AND DEMOLITION WASTE MATERIALS DIVERTED SHALL BE CALCULATED BY WEIGHT OR VOLUME, BUT NOT BY BOTH.

5.408.1.2 WASTE MANAGEMENT COMPANY. UTILIZE A WASTE MANAGEMENT COMPANY THAT CAN PROVIDE VERIFIABLE DOCUMENTATION THAT THE PERCENTAGE OF CONSTRUCTION AND DEMOLITION WASTE MATERIAL DIVERTED FROM THE LANDFILL COMPLIES WITH THIS SECTION.

NOTE: THE OWNER OR CONTRACTOR SHALL MAKE THE DETERMINATION IF THE CONSTRUCTION AND DEMOLITION WASTE MATERIAL WILL BE DIVERTED BY A WASTE MANAGEMENT COMPANY.

EXCEPTIONS TO SECTIONS 5.408.1.1 AND 5.408.1.2:

1. EXCAVATED SOIL AND LAND-CLEARING DEBRIS.
2. ALTERNATE WASTE REDUCTION METHODS DEVELOPED BY WORKING WITH LOCAL AGENCIES IF DIVERSION OR RECYCLE FACILITIES CAPABLE OF COMPLIANCE WITH THIS ITEM DO NOT EXIST.
3. DEMOLITION WASTE MEETING LOCAL ORDINANCE OR CALCULATED IN CONSIDERATION OF LOCAL RECYCLING FACILITIES AND MARKETS.

5.408.1.3 WASTE STREAM REDUCTION ALTERNATIVE. THE COMBINED WEIGHT OF NEW CONSTRUCTION DISPOSAL THAT DOES NOT EXCEED TWO POUNDS PER SQUARE FOOT OF BUILDING AREA MAY BE DEEMED TO MEET THE 65% MINIMUM REQUIREMENT AS APPROVED BY THE ENFORCING AGENCY.

4.408.1 CONSTRUCTION WASTE MANAGEMENT
NEWLY-CONSTRUCTED PROJECTS AND ADDITIONS AND ALTERATIONS TO EXISTING BUILDINGS SHALL RECYCLE AND/OR SALVAGE FOR REUSE A MINIMUM OF SIXTY-FIVE (65) PERCENT OF THE NON-HAZARDOUS CONSTRUCTION AND DEMOLITION DEBRIS IN ACCORDANCE WITH EITHER SECTION 4.408.2, 4.408.3 OR 4.408.4, OR MEET A LOCAL CONSTRUCTION AND DEMOLITION WASTE MANAGEMENT ORDINANCE, WHICHEVER IS MORE STRINGENT. CALCULATE THE AMOUNT OF MATERIALS DIVERTED BY WEIGHT OR BY VOLUME, BUT NOT BY BOTH. (LA COUNTY ORDINANCE 2019-0061)

5.408.1.4 DOCUMENTATION. SHALL BE PROVIDED TO THE ENFORCING AGENCY WHICH DEMONSTRATES COMPLIANCE WITH SECTIONS 5.408.1.3 THE WASTE MANAGEMENT PLAN SHALL BE UPDATED AS NECESSARY AND SHALL BE ACCESSIBLE DURING CONSTRUCTION FOR EXAMINATION BY THE ENFORCING AGENCY.

NOTES:
1. SAMPLE FORMS FOUND IN "A GUIDE TO THE CALIFORNIA BUILDING STANDARD CODE NONRESIDENTIAL)" LOCATED AT WWW.BSC.CA.GOV/HOME/CALGREEN.ASPX MAY BE USED TO ASSIST IN DOCUMENTING COMPLIANCE WITH THE WASTE MANAGEMENT PLAN.
2. MIXED CONSTRUCTION AND DEMOLITION DEBRIS PROCESSORS CAN BE LOCATED AT THE CALIFORNIA DEPARTMENT OF RESOURCES RECYCLING AND RECOVERY (CALRYCYLE).

5.408.2 UNIVERSAL WASTE. [A] ADDITIONS AND ALTERATIONS TO A BUILDING OR TENANT SPACE THAT MEET THE SCOPING PROVISIONS IN SECTION 301.3 FOR NONRESIDENTIAL ADDITIONS AND ALTERATIONS, SHALL REQUIRE VERIFICATION THAT UNIVERSAL WASTE ITEMS SUCH AS FLUORESCENT LAMPS AND BALLAST AND MERCURY CONTAINING THERMOSTATS AS WELL AS OTHER CALIFORNIA PROHIBITED UNIVERSAL WASTE MATERIALS ARE DISPOSED OF PROPERLY AND ARE DIVERTED FROM LANDFILLS. A LIST OF PROHIBITED UNIVERSAL WASTE MATERIALS SHALL BE INCLUDED IN THE CONSTRUCTION DOCUMENTS.

5.106.12.3 HARDSCAPE AREAS. SHADE TREE PLANTINGS, MINIMUM #10 CONTAINER SIZE OR EQUAL SHALL BE INSTALLED TO PROVIDE SHADE OVER 20 PERCENT OF THE HARDSCAPE AREA WITHIN 15 YEARS.

EXCEPTIONS: WALKS, HARDSCAPE AREAS COVERED BY SOLAR PHOTOVOLTAIC SHADE STRUCTURES, AND HARDSCAPE AREAS COVERED BY SHADE STRUCTURES WITH ROOFING MATERIALS THAT COMPLY WITH TABLE A5.106.11.2.2 IN APPENDIX A5, ARE NOT INCLUDED IN THE TOTAL AREA CALCULATION.

DIVISION 5.2 ENERGY EFFICIENCY

SECTION 5.201 GENERAL
5.201.1 SCOPE [BSC-CG]. CALIFORNIA ENERGY CODE [DSA-SS]. FOR THE PURPOSES OF MANDATORY ENERGY EFFICIENCY STANDARDS IN THIS CODE, THE CALIFORNIA ENERGY COMMISSION WILL CONTINUE TO ADOPT MANDATORY BUILDING STANDARDS.

DIVISION 5.3 WATER EFFICIENCY AND CONSERVATION

SECTION 5.301 GENERAL
5.301.1 SCOPE. THE PROVISIONS OF THIS CHAPTER SHALL ESTABLISH THE MEANS OF CONSERVING WATER USE INDOORS, OUTDOORS AND IN WASTEWATER CONVEYANCE.

SECTION 5.302 DEFINITIONS
5.302.1 DEFINITIONS. THE FOLLOWING TERMS ARE DEFINED IN CHAPTER 2 (AND ARE INCLUDED HERE FOR REFERENCE)

EVAPOTRANSPIRATION ADJUSTMENT FACTOR (ETAF) [DSA-SS]. AN ADJUSTMENT FACTOR WHEN APPLIED TO REFERENCE EVAPOTRANSPIRATION THAT ADJUSTS FOR PLANT FACTORS AND IRRIGATION EFFICIENCY, WHICH AE TWO MAJOR INFLUENCES ON THE AMOUNT OF WATER THAT NEEDS TO BE APPLIED TO THE LANDSCAPE.

FOOTPRINT AREA [DSA-SS]. THE TOTAL AREA OF THE FURTHEST EXTERIOR WALL OF THE STRUCTURE PROJECTED TO NATURAL GRADE, NOT INCLUDING EXTERIOR AREAS SUCH AS STAIRS, COVERED WALKWAYS, PATIOS AND DECKS.

METERING FAUCET. A SELF-CLOSING FAUCET THAT DISPENSES A SPECIFIC VOLUME OF WATER FOR EACH ACTUATION CYCLE. THE VOLUME OR CYCLE DURATION CAN BE FIXED OR ADJUSTABLE.

GRAYWATER. PURSUANT TO HEALTH AND SAFETY CODE SECTION 17922.12, "GRAYWATER" MEANS UNTREATED WASTEWATER THAT HAS NOT BEEN CONTAMINATED BY ANY TOILET DISCHARGE, HAS NOT BEEN AFFECTED BY INFECTIOUS, CONTAMINATED, OR UNHEALTHY BODILY WASTES, AND DOES NOT PRESENT A THREAT FROM CONTAMINATION BY UNHEALTHFUL PROCESSING, MANUFACTURING, OR OPERATING WASTES. "GRAYWATER" INCLUDES, BUT IS NOT LIMITED TO WASTEWATER FROM BATHTUBS, SHOWERS, BATHROOM WASHBASINS, CLOTHES WASHING MACHINES AND LAUNDRY TUBS, BUT DOES NOT INCLUDE WASTE WATER FROM KITCHEN SINKS OR DISHWASHERS.

MODEL WATER EFFICIENT LANDSCAPE ORDINANCE (MWELO). THE CALIFORNIA ORDINANCE REGULATING LANDSCAPE DESIGN, INSTALLATION AND MAINTENANCE PRACTICES THAT WILL ENSURE COMMERCIAL, MULTIFAMILY AND OTHER DEVELOPER INSTALLED LANDSCAPES GREATER THAN 2500 SQUARE FEET MEET AN IRRIGATION WATER BUDGET DEVELOPED BASED ON LANDSCAPED AREA AND CLIMATOLOGICAL PARAMETERS.

MODEL WATER EFFICIENT LANDSCAPE ORDINANCE (MWELO). [HCD] THE CALIFORNIA MODEL ORDINANCE (CALIFORNIA CODE OF REGULATIONS, TITLE 23, DIVISION 2, CHAPTER 2.7), REGULATING LANDSCAPE DESIGN, INSTALLATION AND MAINTENANCE PRACTICES. LOCAL AGENCIES ARE REQUIRED TO ADOPT THE UPDATED MWELO, OR ADOPT A LOCAL ORDINANCE AT LEAST AS EFFECTIVE AS THE MWELO.

POTABLE WATER. WATER THAT IS DRINKABLE AND MEETS THE U.S. ENVIRONMENTAL PROTECTION AGENCY (EPA) DRINKING WATER STANDARDS. SEE DEFINITION IN THE CALIFORNIA PLUMBING CODE, PART 5.

POTABLE WATER. [HCD] WATER THAT IS SATISFACTORY FOR DRINKING, CULINARY, AND DOMESTIC PURPOSES, AND MEETS THE U.S. ENVIRONMENTAL PROTECTION AGENCY (EPA) DRINKING WATER STANDARDS AND THE REQUIREMENTS OF THE HEALTH AUTHORITY HAVING JURISDICTION.

RECYCLED WATER. WATER WHICH, AS A RESULT OF TREATMENT OF WASTE, IS SUITABLE FOR A DIRECT BENEFICIAL USE OR A CONTROLLED USE THAT WOULD NOT OTHERWISE OCCUR [WATER CODE SECTION 13050 (N)]. SIMPLY PUT, RECYCLED WATER IS WATER TREATED TO REMOVE WASTE MATTER ATTAINING A QUALITY THAT IS SUITABLE TO USE THE WATER AGAIN.

SUBMETER. A METER INSTALLED SUBORDINATE TO A SITE METER. USUALLY USED TO MEASURE WATER INTENDED FOR ONE PURPOSE, SUCH AS LANDSCAPE IRRIGATION. FOR THE PURPOSES OF CALGREEN, A DEDICATED METER MAY BE CONSIDERED A SUBMETER.

WATER BUDGET. IS THE ESTIMATED TOTAL LANDSCAPE IRRIGATION WATER USE WHICH SHALL NOT EXCEED THE MAXIMUM APPLIED WATER ALLOWANCE CALCULATED IN ACCORDANCE WITH THE DEPARTMENT OF WATER RESOURCES MODEL EFFICIENT LANDSCAPE ORDINANCE (MWELO).

SECTION 5.303 INDOOR WATER USE
5.303.1 METERS. SEPARATE SUBMETERS OR METERING DEVICES SHALL BE INSTALLED FOR THE USES DESCRIBED IN SECTIONS 503.1.1 AND 503.1.2.

5.303.1.1 NEW BUILDINGS IN EXCESS OF 50,000 SQUARE FEET. SEPARATE SUBMETERS SHALL BE INSTALLED AS FOLLOWS:

1. FOR EACH INDIVIDUAL LEASED, RENTED OR OTHER TENANT SPACE WITHIN THE BUILDING PROJECTED TO CONSUME MORE THAN 100 GAL/DAY (380 L/DAY), INCLUDING, BUT NOT LIMITED TO, SPACES USED FOR LAUNDRY OR CLEANERS, RESTAURANT OR FOOD SERVICE, MEDICAL OR DENTAL OFFICE, LABORATORY, OR BEAUTY SALON OR BARBER SHOP.
2. WHERE SEPARATE SUBMETERS FOR INDIVIDUAL BUILDING TENANTS ARE UNFEASIBLE, FOR WATER SUPPLIED TO THE FOLLOWING SUBSYSTEMS:
   A. MAKEUP WATER FOR COOLING TOWERS WHERE FLOW THROUGH IS GREATER THAN 500 GPM (30 L/S).
   B. MAKEUP WATER FOR EVAPORATIVE COOLERS GREATER THAN 6 GPM (0.04L/S).
   C. STEAM AND HOT WATER BOILERS WITH ENERGY INPUT MORE THAN 500,000 BTU/(147KW).

5.303.1.2 EXCESS CONSUMPTION. A SEPARATE SUBMETER OR METERING DEVICE SHALL BE PROVIDED FOR ANY TENANT WITHIN A NEW BUILDING OR WITHIN AN ADDITION THAT IS PROJECTED TO CONSUME MORE THAN 1,000 GAL/DAY.

5.303.3 WATER CONSERVING PLUMBING FIXTURES AND FITTINGS. PLUMBING FIXTURES (WATER CLOSETS AND URINALS) AND FITTINGS (FAUCETS AND SHOWERHEADS) SHALL COMPLY WITH THE FOLLOWING:

5.303.3.1 WATER CLOSETS. THE EFFECTIVE FLUSH VOLUME OF ALL WATER CLOSETS SHALL NOT EXCEED 1.28 GALLONS FLUSH. TANK-TYPE WATER CLOSETS SHALL BE CERTIFIED TO THE PERFORMANCE CRITERIA OF THE U.S. EPA WATERSENSE SPECIFICATION FOR TANK-TYPE TOILETS.

NOTE: THE EFFECTIVE FLUSH VOLUME OF THE DUAL FLUSH TOILETS IS DEFINED AS THE COMPOSITE, AVERAGE FLUSH VOLUME OF TWO REDUCED FLUSHES AND ONE FULL FLUSH.

5.303.3.2 URINALS.
5.303.3.2.1 WALL-MOUNTED URINALS. THE EFFECTIVE FLUSH VOLUME OF WALL-MOUNTED URINALS SHALL NOT EXCEED 0.125 GALLONS PER FLUSH.

5.303.3.2.2 FLOOR-MOUNTED URINALS. THE EFFECTIVE FLUSH VOLUME OF FLOOR-MOUNTED OR OTHER URINALS SHALL NOT EXCEED 0.5 GALLONS PER FLUSH.

5.303.3.3 SHOWERHEADS. [BSC-CG]
5.303.3.3.1 SINGLE SHOWERHEAD. SHOWERHEADS SHALL HAVE A MAXIMUM FLOW RATE OF NOT MORE THAN 1.8 GALLONS PER MINUTE AT 80 PSI. SHOWERHEADS SHALL BE CERTIFIED TO THE PERFORMANCE CRITERIA OF THE U.S. EPA WATERSENSE SPECIFICATION FOR SHOWERHEADS.

5.303.3.3.2 MULTIPLE SHOWERHEADS SERVING ONE SHOWER. WHEN A SHOWER IS SERVED BY MORE THAN ONE SHOWERHEAD, THE COMBINED FLOW RATE OF ALL THE SHOWERHEADS AND/OR OTHER SHOWER OUTLETS CONTROLLED BY A SINGLE VALVE SHALL NOT EXCEED 1.8 GALLONS PER MINUTE AT 80 PSI, OR THE SHOWER SHALL BE DESIGNED TO ALLOW ONLY ONE SHOWER OUTLET TO BE IN OPERATION AT A TIME.

NOTE: A HAND-HELD SHOWER SHALL BE CONSIDERED A SHOWERHEAD.

5.303.3.4 FAUCETS AND FOUNTAINS.

5.303.3.4.1 NONRESIDENTIAL LAVATORY FAUCETS. LAVATORY FAUCETS SHALL HAVE A MAXIMUM FLOW RATE OF NOT MORE THAN 0.5 GALLONS PER MINUTE AT 60 PSI.

5.303.3.4.2 KITCHEN FAUCETS. KITCHEN FAUCETS SHALL HAVE A MAXIMUM FLOW RATE OF NOT MORE THAN 1.8 GALLONS PER MINUTE AT 60 PSI. KITCHEN FAUCETS MAY TEMPORARILY INCREASE THE FLOW ABOVE HE MAXIMUM RATE, BUT NOT TO EXCEED 2.2 GALLONS PER MINUTE AT 60 PSI, AND MUST DEFAULT TO A MAXIMUM FLOW RATE OF 1.8 GALLONS PER MINUTE AT 60 PSI.

5.303.3.4.3 WASH FOUNTAINS. WASH FOUNTAINS SHALL HAVE A MAXIMUM FLOW RATE OF NOT MORE THAN 1.8 GALLONS PER MINUTE/20 [RIM SPACE (INCHES) AT 60 PSI].

5.303.3.4.4 METERING FAUCETS. METERING FAUCETS SHALL NOT DELIVER MORE THAN 0.20 GALLONS PER CYCLE.

5.106.5.3 ELECTRIC VEHICLE (EV) CHARGING. [N] CONSTRUCTION SHALL COMPLY WITH SECTION 5.106.5.3.1 OR SECTION 5.106.5.3.2 TO FACILITATE FUTURE INSTALLATION OF ELECTRIC VEHICLE SUPPLY EQUIPMENT (EVSE). WHEN EVSE(S) IS/ARE INSTALLED, IT SHALL BE IN ACCORDANCE WITH THE CALIFORNIA BUILDING CODE, THE CALIFORNIA ELECTRICAL CODE AND AS FOLLOWS:

5.106.5.3.1 SINGLE CHARGING SPACE REQUIREMENTS. [N] WHEN ONLY A SINGLE CHARGING SPACE IS REQUIRED PER TABLE 5.106.5.3.3, A RACEWAY IS REQUIRED TO BE INSTALLED AT THE TIME OF CONSTRUCTION AND SHALL BE INSTALLED IN ACCORDANCE WITH THE CALIFORNIA ELECTRICAL CODE. CONSTRUCTION PLANS AND SPECIFICATIONS SHALL INCLUDE, BUT ARE NOT LIMITED TO, THE FOLLOWING:

1. THE TYPE AND LOCATION OF THE EVSE.
2. A LISTED RACEWAY CAPABLE OF ACCOMMODATING A 208/240 -VOLT DEDICATED BRANCH CIRCUIT.
3. THE RACEWAY SHALL NOT BE LESS THAN TRADE SIZE 1".
4. THE RACEWAY SHALL ORIGINATE AT A SERVICE PANEL OR A SUBPANEL SERVING THE AREA, AND SHALL TERMINATE IN CLOSE PROXIMITY TO THE PROPOSED LOCATION OF THE CHARGING EQUIPMENT AND LISTED SUITABLE CABINET, BOX, ENCLOSURE OR EQUIVALENT.
5. THE SERVICE PANEL OR SUBPANEL SHALL HAVE SUFFICIENT CAPACITY TO ACCOMMODATE A MINIMUM 40-AMPERE DEDICATED BRANCH CIRCUIT FOR THE FUTURE INSTALLATION OF THE EVSE.

5.106.5.3.2 MULTIPLE CHARGING SPACE REQUIREMENTS. [N] WHEN MULTIPLE CHARGING SPACES ARE REQUIRED PER TABLE 5.106.5.3.3 RACEWAY(S) IS/ARE REQUIRED TO BE INSTALLED AT THE TIME OF CONSTRUCTION AND SHALL BE INSTALLED IN ACCORDANCE WITH THE CALIFORNIA ELECTRICAL CODE. CONSTRUCTION PLANS AND SPECIFICATIONS SHALL INCLUDE, BUT ARE NOT LIMITED TO, THE FOLLOWING:

1. THE TYPE AND LOCATION OF THE EVSE.
2. THE RACEWAY(S) SHALL ORIGINATE AT A SERVICE PANEL OR A SUBPANEL(S) SERVING THE AREA, AND SHALL TERMINATE IN CLOSE PROXIMITY TO THE PROPOSED LOCATION OF THE CHARGING EQUIPMENT AND INTO LISTED SUITABLE CABINET(S), BOX(ES), ENCLOSURE(S) OR EQUIVALENT.
3. PLAN DESIGN SHALL BE BASED UPON 40-AMPERE MINIMUM BRANCH CIRCUITS.
4. ELECTRICAL CALCULATIONS SHALL SUBSTANTIATE THE DESIGN OF THE ELECTRICAL SYSTEM, TO INCLUDE THE RATING OF EQUIPMENT AND ANY ON-SITE DISTRIBUTION TRANSFORMERS AND HAVE SUFFICIENT CAPACITY TO SIMULTANEOUSLY CHARGE ALL REQUIRED EVS AT ITS FULL RATED AMPERAGE.
5. THE SERVICE PANEL OR SUBPANEL(S) SHALL HAVE SUFFICIENT CAPACITY TO ACCOMMODATE THE REQUIRED NUMBER OF DEDICATED BRANCH CIRCUIT(S) FOR THE FUTURE INSTALLATION OF THE EVSE.

5.106.5.3.3 EV CHARGING SPACE CALCULATIONS. [N] TABLE 5.106.5.3.3 SHALL BE USED TO DETERMINE IF SINGLE OR MULTIPLE CHARGING SPACE REQUIREMENTS APPLY FOR THE FUTURE INSTALLATION OF EVSE.

EXCEPTIONS: ON A CASE-BY-CASE BASIS WHERE THE LOCAL ENFORCING AGENCY HAS DETERMINED EV CHARGING AND INFRASTRUCTURE IS NOT FEASIBLE BASED UPON ONE OR MORE OF THE FOLLOWING CONDITIONS:

1. WHERE THERE IS INSUFFICIENT ELECTRICAL SUPPLY.
2. WHERE THERE IS EVIDENCE SUITABLE TO THE LOCAL ENFORCING AGENCY SUBSTANTIATING THAT ADDITIONAL LOCAL UTILITY INFRASTRUCTURE DESIGN REQUIREMENTS, DIRECTLY RELATED TO THE IMPLEMENTATION OF SECTION 5.106.5.3, MAY ADVERSELY IMPACT THE CONSTRUCTION COST OF THE PROJECT.

TABLE 5.106.8 [N] MAXIMUM ALLOWABLE BACKLIGHT, UPLIGHT AND GLARE (BUG) RATINGS [1,2]

ALLOWABLE RATING	LIGHTING ZONE LZ0	LIGHTING ZONE LZ1	LIGHTING ZONE LZ2	LIGHTING ZONE LZ3	LIGHTING ZONE LZ4
MAXIMUM ALLOWABLE BACKLIGHT RATING [3]					
LUMINAIRE GREATER THAN 2 MOUNTING HEIGHTS (MH) FROM PROPERTY LINE	N/A	NO LIMIT	NO LIMIT	NO LIMIT	NO LIMIT
LUMINAIRE BACK HEMISPHERE IS 1-2 MH FROM PROPERTY LINE	N/A	B2	B3	B4	B4
LUMINAIRE BACK HEMISPHERE IS 0.5-1 MH FROM PROPERTY LINE	N/A	B1	B2	B3	B3
LUMINAIRE BACK HEMISPHERE IS LESS THAN 0.5 MH FROM PROPERTY LINE	N/A	B0	B0	B1	B2
MAXIMUM ALLOWABLE UPLIGHT RATING (U)					
FOR AREA LIGHTING [4]	N/A	U0	U0	U0	U0
FOR ALL OTHER OUTDOOR LIGHTING,INCLUDING DECORATIVE LUMINAIRES	N/A	U1	U2	U3	U4
MAXIMUM ALLOWABLE GLARE RATING [5] (G)					
LUMINAIRE GREATER THAN 2 MH FROM PROPERTY LINE	N/A	G1	G2	G3	G4
LUMINAIRE FRONT HEMISPHERE IS 1-2 MH FROM PROPERTY LINE	N/A	G0	G1	G1	G2
LUMINAIRE FRONT HEMISPHERE IS 0.5-1 MH FROM PROPERTY LINE	N/A	G0	G0	G1	G1
LUMINAIRE BACK HEMISPHERE IS LESS THAN 0.5 MH FROM PROPERTY LINE	N/A	G0	G0	G0	G1

1. IESNA LIGHTING ZONES 0 AND 5 ARE NOT APPLICABLE; REFER TO LIGHTING ZONES AS DEFINED IN THE CALIFORNIA ENERGY CODE AND CHAPTER 10 OF THE CALLIFORNIA ADMINISTRATIVE CODE.
2. FOR PROPERTY LINES THAT ABUT PUBLIC WALKWAYS, BIKEWAYS, PLAZAS AND PARKING LOTS, THE PROPERTY LINE MAY BE CONSIDERED TO BE 5 FEET BEYOND THE ACTUAL PROPERTY LINE FOR PURPOSE OF DETERMINING COMPLIANCE WITH THIS SECTION. FOR PROPERTY LINES THAT ABUT PUBLIC ROADWAYS AND PUBLIC TRANSIT CORRIDORS, THE PROPERTY LINE MAY BE CONSIDERED TO BE THE CENTERLINE OF THE PUBLIC ROADWAY OR PUBLIC TRANSIT CORRIDOR FOR THE PURPOSE OF DETERMINING COMPLIANCE WITH THIS SECTION.
3. IF THE NEAREST PROPERTY LINE IS LESS THAN OR EQUAL TO TWO MOUNTING HEIGHTS FROM THE BACK HEMISPHERE OF THE LUMINAIRE DISTRIBUTION, THE APPLICABLE REDUCED BACKLIGHT RATING SHALL BE MET.
4. GENERAL LIGHTING LUMINAIRES IN AREAS SUCH AS OUTDOOR PARKING, SALES OR STORAGE LOTS SHALL MEET THESE REDUCED RATINGS. DECORATIVE LUMINAIRES LOCATED IN THESE AREAS SHALL MEET U-VALUE LIMITS FOR "ALL OTHER OUTDOOR LIGHTING".
5. IF THE NEAREST PROPERTY LINE IS LESS THAN OR EQUAL TO TWO MOUNTING HEIGHTS FROM THE FRONT HEMISPHERE OF THE LUMINAIRE DISTRIBUTION, THE APPLICABLE REDUCED GLARE RATING SHALL BE MET.

5.106.12 SHADE TREES [DSA-SS]. SHADE TREES SHALL BE PLANTED TO COMPLY WITH SECTIONS 5.106.12.1, 5.106.12.2, AND 5.106.12.3. PERCENTAGES SHOWN SHALL BE MEASURED AT NOON ON THE SUMMER SOLSTICE. LANDSCAPE IRRIGATION NECESSARY TO ESTABLISH AND MAINTAIN TREE HEALTH SHALL COMPLY WITH SECTION 5.304.6.
5.106.12.1 SURFACE PARKING AREAS. SHADE TREE PLANTINGS, MINIMUM #10 CONTAINER SIZE OR EQUAL, SHALL BE INSTALLED TO PROVIDE SHADE OVER 50 PERCENT OF THE PARKING AREA WITHIN 15 YEARS.

EXCEPTIONS: THE SURFACE PARKING AREA COVERED BY SOLAR PHOTOVOLTAIC SHADE STRUCTURES, OR SHADE STRUCTURES, WITH ROOFING MATERIALS THAT COMPLY WITH TABLE A5.106.11.2.2 IN APPENDIX A5, ARE NOT INCLUDED IN THE TOTAL AREA CALCULATIONS.

5.106.12.2 LANDSCAPE AREAS. SHADE TRESS PLANTINGS, MINIMUM #10 CONTAINER SIZE OR EQUAL SHALL BE INSTALLED TO PROVIDE SHADE OF 20% OF THE LANDSCAPE AREA WITHIN 15 YEARS.

EXCEPTIONS: PLAYFIELDS FOR ORGANIZED SPORT ACTIVITY ARE NOT INCLUDED IN THE TOTAL AREA CALCULATION.

5.106.1.2 BEST MANAGEMENT PRACTICES (BMPS). PREVENT THE LOSS OF SOIL THROUGH WIND OR WATER EROSION BY IMPLEMENTING AN EFFECTIVE COMBINATION OF EROSION AND SEDIMENT CONTROL AND GOOD HOUSEKEEPING BMPS.

1. SOIL LOSS BMPS THAT SHOULD BE CONSIDERED FOR IMPLEMENTATION AS APPROPRIATE FOR EACH PROJECT INCLUDE, BUT ARE NOT LIMITED TO, THE FOLLOWING:
   A. SCHEDULING CONSTRUCTION ACTIVITY DURING DRY WEATHER, WHEN POSSIBLE.
   B. PRESERVATION OF NATURAL FEATURES, VEGETATION, SOIL, AND BUFFERS AROUND SURFACE WATERS.
   C. DRAINAGE SWALES OR LINED DITCHES TO CONTROL STORMWATER FLOW.
   D. MULCHING OR HYDROSEEDING TO STABILIZE DISTURBED SOILS.
E. EROSION CONTROL TO PROTECT SLOPES.
   F. PROTECTION OF STORM DRAIN INLETS (GRAVEL BAGS OR CATCH BASIN INSERTS).
   G. PERIMETER SEDIMENT CONTROL (PERIMETER SILT FENCE, FIBER ROLLS).
   H. SEDIMENT TRAP OR SEDIMENT BASIN TO RETAIN SEDIMENT ON SITE.
   I. STABILIZED CONSTRUCTION EXITS.
   J. WIND EROSION CONTROL.
   K. OTHER SOIL LOSS BMPS ACCEPTABLE TO THE ENFORCING AGENCY.
2. GOOD HOUSEKEEPING BMPS TO MANAGE CONSTRUCTION EQUIPMENT, MATERIALS, NON-STORMWATER DISCHARGES AND WASTES THAT SHOULD BE CONSIDERED FOR IMPLEMENTATION AS APPROPRIATE FOR EACH PROJECT INCLUDE, BUT ARE NOT LIMITED TO, THE FOLLOWING:
   A. DEWATERING ACTIVITIES.
   B. MATERIAL HANDLING AND WASTE MANAGEMENT.
   C. BUILDING MATERIALS STOCKPILE MANAGEMENT.
   D. MANAGEMENT OF WASHOUT AREAS (CONCRETE, PAINTS, STUCCO, ETC.).
   E. CONTROL OF VEHICLE/EQUIPMENT FUELING TO CONTRACTOR'S STAGING AREA.
   F. VEHICLE AND EQUIPMENT CLEANING PERFORMED OFF SITE.
   G SPILL PREVENTION AND CONTROL.
   H. OTHER HOUSEKEEPING BMPS ACCEPTABLE TO THE ENFORCING AGENCY.

5.106.2 STORMWATER POLLUTION PREVENTION FOR PROJECTS THAT DISTURB ONE OR MORE ACRES OF LAND. COMPLY WITH ALL LAWFULLY ENACTED STORMWATER DISCHARGE REGULATIONS FOR PROJECTS THAT (1) DISTURB ONE ACRE OR MORE OF LAND, OR (2) DISTURB LESS THAN ONE ACRE OF LAND BUT ARE PART OF A LARGER COMMON PLAN OF DEVELOPMENT SALE.

NOTE: PROJECTS THAT (1) DISTURB ONE ACRE OR MORE OF LAND, OR (2) DISTURB LESS THAN ONE ACRE OF LAND BUT ARE PART OF THE LARGER COMMON PLAN OF DEVELOPMENT OR SALE MUST COMPLY WITH THE POST-CONSTRUCTION REQUIREMENTS DETAILED IN THE APPLICABLE NATIONAL POLLUTANT DISCHARGE ELIMINATION SYSTEM (NPDES) GENERAL PERMIT FOR STORMWATER DISCHARGES ASSOCIATED WITH CONSTRUCTION AND LAND DISTURBANCE ACTIVITIES ISSUED BY THE STATE WATER RESOURCES CONTROL BOARD OR THE LAHONTAN REGIONAL WATER QUALITY CONTROL BOARD (FOR PROJECTS IN THE LAKE TAHOE HYDROLOGIC UNIT).

THE NPDES PERMITS REQUIRE POSTCONSTRUCTION RUNOFF (POST-PROJECT HYDROLOGY) TO MATCH THE PRECONSTRUCTION RUNOFF (PRE-PROJECT HYDROLOGY) WITH THE INSTALLATION OF POSTCONSTRUCTION STORMWATER MANAGEMENT MEASURES. THE NPDES PERMITS EMPHASIZE RUNOFF REDUCTION THROUGH ON-SITE STORMWATER USE, INTERCEPTION, EVAPOTRANSPIRATION, AND INFILTRATION THROUGH NONSTRUCTURAL CONTROLS, SUCH AS LOW IMPACT DEVELOPMENT (LID) PRACTICES, AND CONVERSATION DESIGN MEASURES. STORMWATER VOLUME THAT CANNOT BE ADDRESSED USING NONSTRUCTURAL PRACTICES IS REQUIRED TO BE CAPTURED IN STRUCTURAL PRACTICES AND BE APPROVED BY THE ENFORCING AGENCY.

REFER TO THE CURRENT APPLICABLE PERMITS ON THE STATE WATER RESOURCES CONTROL BOARD WEBSITE AT: WWW.WATERBOARDS.CA.GOV/CONSTRUCTIONSTORMWATER. CONSIDERATION TO THE STORMWATER RUNOFF MANAGEMENT MEASURES SHOULD BE GIVEN DURING THE INITIAL DESIGN PROCESS FOR APPROPRIATE INTEGRATION INTO SITE DEVELOPMENT.

5.106.4 BICYCLE PARKING. FOR BUILDINGS WITHIN THE AUTHORITY OF CALIFORNIA BUILDING STANDARDS COMMISSION AS SPECIFIED IN SECTION 103, COMPLY WITH SECTION 5.106.4.1. FOR BUILDINGS WITHIN THE AUTHORITY OF THE DIVISION OF THE STATE ARCHITECT PURSUANT TO SECTION 105, COMPLY WITH SECTION 5.106.4.2

5.106.4.1 BICYCLE PARKING. [BSC-CG] COMPLY WITH SECTIONS 5.106.4.1.1 AND 5.106.4.1.2; OR MEET THE APPLICABLE LOCAL ORDINANCE, WHICHEVER IS STRICTER.

5.106.4.1.1 SHORT-TERM BICYCLE PARKING. IF THE NEW PROJECT OR AN ADDITION OR ALTERATION IS ANTICIPATED TO GENERATE VISITOR TRAFFIC, PROVIDE PERMANENTLY ANCHORED BICYCLE RACKS WITHIN 200 FEET OF THE VISITORS' ENTRANCE, READILY VISIBLE TO PASSERS-BY, FOR 5% OF NEW VISITOR MOTORIZED VEHICLE PARKING SPACES BEING ADDED, WITH A MINIMUM OF ONE TWO-BIKE CAPACITY RACK.

EXCEPTION: ADDITIONS OR ALTERATIONS WHICH ADD NINE OR LESS VISITOR VEHICULAR PARKING SPACES.

5.106.4.1.2 LONG-TERM BICYCLE PARKING. FOR NEW BUILDINGS WITH TENANT SPACES THAT HAVE 10 OR MORE TENANT-OCCUPANTS, PROVIDE SECURE BICYCLE PARKING FOR 5 PERCENT OF THE TENANT-OCCUPANT VEHICULAR PARKING SPACES WITH A MINIMUM OF ONE BICYCLE PARKING FACILITY.

5.106.4.1.3 FOR ADDITIONS OR ALTERATIONS THAT ADD 10 OR MORE TENANT-OCCUPANT VEHICULAR PARKING SPACES, PROVIDE SECURE BICYCLE PARKING FOR 5 PERCENT OF THE TENANT VEHICULAR PARKING SPACES BEING ADDED, WITH A MINIMUM OF ONE BICYCLE PARKING FACILITY.

5.106.4.1.4 FOR NEW SHELL BUILDINGS IN PHASED PROJECTS PROVIDE SECURE BICYCLE PARKING FOR 5 PERCENT OF THE ANTICIPATED TENANT-OCCUPANT VEHICULAR PARKING SPACES WITH A MINIMUM OF ONE BICYCLE PARKING FACILITY.

5.106.4.1.5 ACCEPTABLE BICYCLE PARKING FACILITY FOR SECTIONS 5.106.4.1.2, 5.106.4.1.3, AND 5.106.4.1.4 SHALL BE CONVENIENT FROM THE STREET AND SHALL MEET ONE OF THE FOLLOWING:

1. COVERED, LOCKABLE ENCLOSURES WITH PERMANENTLY ANCHORED RACKS FOR BICYCLES;
2. LOCKABLE BICYCLE ROOMS WITH PERMANENTLY ANCHORED RACKS; OR
3. LOCKABLE, PERMANENTLY ANCHORED BICYCLE LOCKERS.

NOTE: ADDITIONAL INFORMATION ON RECOMMENDED BICYCLE ACCOMMODATIONS MAY BE OBTAINED FROM SACRAMENTO AREA BICYCLE ADVOCATES.

5.106.4.2 BICYCLE PARKING. [DSA-SS] FOR PUBLIC SCHOOLS AND COMMUNITY COLLEGES, COMPLY WITH SECTIONS 5.106.4.2.1 AND 5.106.4.2.2

5.106.4.2.1 STUDENT BICYCLE PARKING. PROVIDE PERMANENTLY ANCHORED BICYCLE RACKS CONVENIENTLY ACCESSED WITH A MINIMUM OF FOUR TWO-BIKE CAPACITY RACKS PER NEW BUILDING.

5.106.4.2.2 STAFF BICYCLE PARKING. PROVIDE PERMANENT, SECURE BICYCLE PARKING CONVENIENTLY ACCESSED WITH A MINIMUM OF TWO STAFF BICYCLE PARKING SPACES PER NEW BUILDING. ACCEPTABLE BICYCLE PARKING FACILITIES SHALL BE CONVENIENT FROM THE STREET OR STAFF PARKING AREA AND SHALL MEET ONE OF THE FOLLOWING:

1. COVERED, LOCKABLE ENCLOSURES WITH PERMANENTLY ANCHORED RACKS FOR BICYCLES;
2. LOCKABLE BICYCLE ROOMS WITH PERMANENTLY ANCHORED RACKS; OR
3. LOCKABLE, PERMANENTLY ANCHORED BICYCLE LOCKERS.

5.106.5.2 DESIGNATED PARKING FOR CLEAN AIR VEHICLES. IN NEW PROJECTS OR ADDITIONS OR ALTERATIONS THAT ADD 10 OR MORE VEHICULAR PARKING SPACES, PROVIDE DESIGNATED PARKING FOR ANY COMBINATION OF LOW-EMITTING, FUEL-EFFICIENT AND CARPOOL/VAN POOL VEHICLES AS FOLLOWS:

TABLE 5.106.5.2 - PARKING

TOTAL NUMBER OF PARKING SPACES	NUMBER OF REQUIRED SPACES
0-9	0
10-25	1
26-50	3
51-75	6
76-100	8
101-150	11
151-200	16
201 AND OVER	AT LEAST 8% OF TOTAL

5.106.5.2.1 - PARKING STALL MARKING. PAINT, IN THE PAINT USED FOR STALL STRIPING, THE FOLLOWING CHARACTERS SUCH THAT THE LOWER EDGE OF THE LAST WORD ALIGNS WITH THE END OF THE STALL STRIPING AND IS VISIBLE BENEATH A PARKED VEHICLE: CLEAN AIR / VAN POOL / EV

NOTE: VEHICLES BEARING CLEAN AIR VEHICLE STICKERS FROM EXPIRED HOV LANE PROGRAMS MAY BE CONSIDERED ELIGIBLE FOR DESIGNATED PARKING SPACES.

CHAPTER 3
GREEN BUILDING
SECTION 301 GENERAL

301.1 SCOPE. BUILDINGS SHALL BE DESIGNED TO INCLUDE THE GREEN BUILDING MEASURES SPECIFIED AS MANDATORY IN THE APPLICATION CHECKLISTS CONTAINED IN THIS CODE. VOLUNTARY GREEN BUILDING MEASURES ARE ALSO INCLUDED IN THE APPLICATION CHECKLISTS AND MAY BE INCLUDED IN THE DESIGN AND CONSTRUCTION OF STRUCTURES COVERED BY THIS CODE, BUT ARE NOT REQUIRED UNLESS ADOPTED BY A CITY, COUNTY, OR CITY AND COUNTY AS SPECIFIED IN SECTION 101.7.

301.3 NONRESIDENTIAL ADDITIONS AND ALTERATIONS. [BSC-CG] THE PROVISIONS OF INDIVIDUAL SECTIONS OF CHAPTER 5 APPLY TO NEWLY CONSTRUCTED BUILDINGS, BUILDING ADDITIONS OF 1,000 SQUARE FEET OR GREATER, AND/OR BUILDING ALTERATIONS WITH A PERMIT VALUATION OF $200,000 OR ABOVE (FOR OCCUPANCIES WITHIN THE AUTHORITY OF CALIFORNIA BUILDING STANDARDS COMMISSION). CODE SECTIONS RELEVANT TO ADDITIONS AND ALTERATIONS SHALL ONLY APPLY TO THE PORTIONS OF THE BUILDING BEING ADDED OR ALTERED WITHIN THE SCOPE OF THE PERMITTED WORK.

A CODE SECTION WILL BE DESIGNATED BY A BANNER TO INDICATE WHERE THE CODE SECTION ONLY APPLIES TO NEWLY CONSTRUCTED BUILDINGS [N] OR TO ADDITIONS AND/OR ALTERATIONS [A]. WHEN THE CODE SECTION APPLIES TO BOTH, NO BANNER WILL BE USED.

301.3.1 NONRESIDENTIAL ADDITIONS AND ALTERATIONS THAT CAUSE UPDATES TO PLUMBING FIXTURES ONLY:

NOTE: ON AND AFTER JANUARY 1, 2014, CERTAIN COMMERCIAL REAL PROPERTY, AS DEFINED IN CIVIL CODE SECTION 1101.3, SHALL HAVE ITS NONCOMPLIANT PLUMBING FIXTURES REPLACED WITH APPROPRIATE WATER-CONSERVING PLUMBING FIXTURES UNDER SPECIFIC CIRCUMSTANCES. SEE CIVIL CODE SECTION 1101.1 ET SEQ. FOR DEFINITIONS, TYPES OF COMMERCIAL REAL PROPERTY AFFECTED, EFFECTIVE DATES, CIRCUMSTANCES NECESSITATING REPLACEMENT OF NONCOMPLIANT PLUMBING FIXTURES, AND DUTIES AND RESPONSIBILITIES FOR ENSURING COMPLIANCE.

301.3.2 WASTE DIVERSION. THE REQUIREMENTS OF SECTION 5.408 SHALL BE REQUIRED FOR ADDITIONS AND ALTERATIONS WHENEVER A PERMIT IS REQUIRED FOR WORK.

301.4 PUBLIC SCHOOLS AND COMMUNITY COLLEGES. (SEE GBSC)
301.5 HEALTH FACILITIES. (SEE GBSC)

SECTION 302 MIXED OCCUPANCY BUILDINGS

302.1 MIXED OCCUPANCY BUILDINGS. IN MIXED OCCUPANCY BUILDINGS, EACH PORTION OF A BUILDING SHALL COMPLY WITH THE SPECIFIC GREEN BUILDING MEASURES APPLICABLE TO EACH SPECIFIC OCCUPANCY.

SECTION 303 PHASED PROJECTS

303.1 PHASED PROJECTS. FOR SHELL BUILDINGS AND OTHERS CONSTRUCTED FOR FUTURE TENANT IMPROVEMENTS, ONLY THOSE CODE MEASURES RELEVANT TO THE BUILDING COMPONENTS AND SYSTEMS CONSIDERED TO BE NEW CONSTRUCTION (OR NEWLY CONSTRUCTED) SHALL APPLY.

303.1.1 INITIAL TENANT IMPROVEMENTS. THE PROVISIONS OF THIS CODE SHALL APPLY ONLY TO THE INITIAL TENANT IMPROVEMENTS TO A PROJECT. SUBSEQUENT TENANT IMPROVEMENTS SHALL COMPLY WITH THE SCOPING PROVISIONS IN SECTION 301.3 NON-RESIDENTIAL ADDITIONS AND ALTERATIONS.

ABBREVIATION DEFINITIONS:

HCD	DEPARTMENT OF HOUSING AND COMMUNITY DEVELOPMENT
BSC	CALIFORNIA BUILDING STANDARDS COMMISSION
DSA-SS	DIVISION OF THE STATE ARCHITECT, STRUCTURAL SAFETY
OSHPD	OFFICE OF STATEWIDE HEALTH PLANNING AND DEVELOPMENT
LR	LOW RISE
HR	HIGH RISE
AA	ADDITIONS AND ALTERATIONS
N	NEW

4.408.1 CONSTRUCTION WASTE MANAGEMENT
NEWLY-CONSTRUCTED PROJECTS AND ADDITIONS AND ALTERATIONS TO EXISTING BUILDINGS SHALL RECYCLE AND/OR SALVAGE FOR REUSE A MINIMUM OF SIXTY-FIVE (65) PERCENT OF THE NON-HAZARDOUS CONSTRUCTION AND DEMOLITION DEBRIS IN ACCORDANCE WITH EITHER SECTION 4.408.2, 4.408.3 OR 4.408.4, OR MEET A LOCAL CONSTRUCTION AND DEMOLITION WASTE MANAGEMENT ORDINANCE, WHICHEVER IS MORE STRINGENT. CALCULATE THE AMOUNT OF MATERIALS DIVERTED BY WEIGHT OR BY VOLUME, BUT NOT BY BOTH. (LA COUNTY ORDINANCE 2019-0061)

CHAPTER 5
NONRESIDENTIAL MANDATORY MEASURES

DIVISION 5.1 PLANNING AND DESIGN

SECTION 5.101 GENERAL
5.101.1 SCOPE
THE PROVISIONS OF THIS CHAPTER OUTLINE PLANNING, DESIGN AND DEVELOPMENT METHODS THAT INCLUDE ENVIRONMENTALLY RESPONSIBLE SITE SELECTION, BUILDING DESIGN, BUILDING SITING AND DEVELOPMENT TO PROTECT, RESTORE AND ENHANCE THE ENVIRONMENTAL QUALITY OF THE SITE AND RESPECT THE INTEGRITY OF ADJACENT PROPERTIES.

SECTION 5.102 DEFINITIONS
5.102.1 DEFINITIONS
THE FOLLOWING TERMS ARE DEFINED IN CHAPTER 2 (AND ARE INCLUDED HERE FOR REFERENCE)

CUTOFF LUMINAIRES. LUMINAIRES WHOSE LIGHT DISTRIBUTION IS SUCH THAT THE CANDELA PER 1000 LAMP LUMENS DOES NOT NUMERICALLY EXCEED 25 (2.5 PERCENT) AT AN ANGLE OF 90 DEGREES ABOVE NADIR, AND 100 (10 PERCENT) AT A VERTICAL ANGLE OF 80 DEGREES ABOVE NADIR. THIS APPLIES TO ALL LATERAL ANGLES AROUND THE LUMINAIRES.

LOW-EMITTING AND FUEL EFFICIENT VEHICLES.
ELIGIBLE VEHICLES ARE LIMITED TO THE FOLLOWING:

1. ZERO EMISSION VEHICLE (ZEV), INCLUDING NEIGHBORHOOD ELECTRIC VEHICLES (NEV), PARTIAL ZERO EMISSION VEHICLE (PZEV), ADVANCED TECHNOLOGY PZEV (AT ZEV) OR CNG FUELED (ORIGINAL EQUIPMENT MANUFACTURER ONLY) REGULATED UNDER HEALTH AND SAFETY CODE SECTION 43800 AND CCR, TITLE 13, SECTIONS 1961 AND 1962.
2. HIGH-EFFICIENCY VEHICLES, REGULATED BY U.S. EPA, BEARING HIGH-OCCUPANCY VEHICLE (HOV)CAR POOL LANE STICKERS ISSUED BY THE DEPARTMENT OF MOTOR VEHICLES.

NEIGHBORHOOD ELECTRIC VEHICLE (NEV). A MOTOR VEHICLE THAT MEETS THE DEFINITION OF "LOW-SPEED VEHICLE" EITHER IN SECTION 385.5 OF THE VEHICLE CODE OR IN 49CFR571.500 (AS IT EXISTED ON JULY 1, 2000), AND IS CERTIFIED TO ZERO-EMISSION VEHICLE STANDARDS.

TENANT-OCCUPANTS. BUILDING OCCUPANTS WHO INHABIT A BUILDING DURING ITS NORMAL HOURS OF OPERATION AS PERMANENT OCCUPANTS, SUCH AS EMPLOYEES, AS DISTINGUISHED FROM CUSTOMERS AND OTHER TRANSIENT VISITORS.

VANPOOL VEHICLE. ELIGIBLE VEHICLES ARE LIMITED TO ANY MOTOR VEHICLE, OTHER THAN A MOTOR TRUCK OR TRUCK TRACTOR, DESIGNED FOR CARRYING MORE THAN 10 BUT NOT MORE THAN 15 PERSONS INCLUDING THE DRIVER, WHICH IS MAINTAINED AND USED PRIMARILY FOR THE NONPROFIT WORK-RELATED TRANSPORTATION OF ADULTS FOR THE PURPOSE OF RIDESHARING.

NOTE: SOURCE: VEHICLE CODE, DIVISION 1, SECTION 668

ZEV. ANY VEHICLE CERTIFIED TO ZERO-EMISSION STANDARDS.

SECTION 5.106 SITE DEVELOPMENT
5.106.1 STORM WATER POLLUTION PREVENTION FOR PROJECTS THAT DISTURB LESS THAN ONE ACRE OF LAND. NEWLY CONSTRUCTED PROJECTS AND ADDITIONS WHICH DISTURB LESS THAN ONE ACRE OF LAND, AND ARE NOT PART OF A LARGER COMMON PLAN OF DEVELOPMENT OR SALE, SHALL PREVENT THE POLLUTION OF STORM WATER RUNOFF FROM THE CONSTRUCTION ACTIVITIES THROUGH ONE OR MORE OF THE FOLLOWING MEASURES:

5.106.1.1 LOCAL ORDINANCE. COMPLY WITH A LAWFULLY ENACTED STORM WATER MANAGEMENT AND/OR

PLANS PREPARED BY:
Blair, Church & Flynn
CONSULTING ENGINEERS
451 Clovis Avenue, Suite 200
Clovis, California 93612
Tel (559) 326-1400
Fax (559) 326-1500

REGISTERED PROFESSIONAL ENGINEER
PAIGE E. NOGA
No. 78,395
CIVIL
STATE OF CALIFORNIA
12/3/2021
Date Signed:

												1	ADDENDUM #1	03-19-2021				PN	PN	JR	PN
												2	ENVIRONMENTAL HEALTH PLAN CHECK REVISIONS	06-18-2021				PN	PN	JR	PN
												3	ADDENDUM #2	12-03-2021				PN	PN	JR	PN
												4	ADDENDUM #3	02-18-2022				PN	PN	JR	PN
REFERENCE DRAWINGS	REFERENCE DRAWINGS	NO.	REVISIONS	DATE	SAP WO	SUPV	APPROVED	ENGR	CK'D	MADE	P.E.	NO.	REVISIONS	DATE	SAP WO	SUPV	APPROVED	ENGR	CK'D	MADE	P.E.	

LOCATION: BISHOP, CALIFORNIA

BISHOP SERVICE CENTER
SITE DEVELOPEMENT
CALGREEN CHECK LIST

VOLUME 1

SOUTHERN CALIFORNIA EDISON An EDISON INTERNATIONAL Company

SHEET NO. C0.3a
SCALE: N/A
4 OF 66 SHTS.

100% CONSTRUCTION DOCUMENTS (12-03-2021)

1 2 3 4 5 6 7 8 9 10 11 12

CALGREEN VERIFICATION GUIDELINES MANDATORY CHECKLIST

CHAPTER 7
INSTALLER & SPECIAL INSPECTOR QUALIFICATIONS

702 QUALIFICATIONS
702.1 INSTALLER TRAINING. HVAC SYSTEM INSTALLERS SHALL BE TRAINED AND CERTIFIED IN THE PROPER INSTALLATION OF HVAC SYSTEMS INCLUDING DUCTS AND EQUIPMENT BY A NATIONALLY OR REGIONALLY RECOGNIZED TRAINING OR CERTIFICATION PROGRAM. UNCERTIFIED PERSONS MAY PERFORM HVAC INSTALLATIONS WHEN UNDER THE DIRECT SUPERVISION AND RESPONSIBILITY OF A PERSON TRAINED AND CERTIFIED TO INSTALL HVAC SYSTEMS OR CONTRACTOR LICENSED TO INSTALL HVAC SYSTEMS. EXAMPLES OF ACCEPTABLE HVAC TRAINING AND CERTIFICATION PROGRAMS INCLUDE BUT ARE NOT LIMITED TO THE FOLLOWING:

1. STATE CERTIFIED APPRENTICESHIP PROGRAMS.
2. PUBLIC UTILITY TRAINING PROGRAMS.
3. TRAINING PROGRAMS SPONSORED BY TRADE, LABOR OR STATEWIDE ENERGY CONSULTING OR VERIFICATION ORGANIZATIONS.
4. PROGRAMS SPONSORED BY MANUFACTURING ORGANIZATIONS.
5. OTHER PROGRAMS ACCEPTABLE TO THE ENFORCING AGENCY.

702.2 SPECIAL INSPECTION [HCD]. WHEN REQUIRED BY THE ENFORCING AGENCY, THE OWNER OR THE RESPONSIBLE ENTITY ACTING AS THE OWNER'S AGENT SHALL EMPLOY ONE OR MORE SPECIAL INSPECTORS TO PROVIDE INSPECTION OR OTHER DUTIES NECESSARY TO SUBSTANTIATE COMPLIANCE WITH THIS CODE. SPECIAL INSPECTORS SHALL DEMONSTRATE COMPETENCE TO THE SATISFACTION OF THE ENFORCING AGENCY FOR THE PARTICULAR TYPE OF INSPECTION OR TASK TO BE PERFORMED. IN ADDITION TO OTHER CERTIFICATIONS OR QUALIFICATIONS ACCEPTABLE TO THE ENFORCING AGENCY, THE FOLLOWING CERTIFICATIONS OR EDUCATION MAY BE CONSIDERED BY THE ENFORCING AGENCY WHEN EVALUATING THE QUALIFICATIONS OF A SPECIAL INSPECTOR:

1. CERTIFICATION BY A NATIONAL OR REGIONAL GREEN BUILDING PROGRAM OR STANDARD PUBLISHER.
2. CERTIFICATION BY A STATEWIDE ENERGY CONSULTING OR VERIFICATION ORGANIZATION, SUCH AS HERS RATERS, BUILDING PERFORMANCE CONTRACTORS, AND HOME ENERGY AUDITORS.
3. SUCCESSFUL COMPLETION OF A THIRD PARTY APPRENTICE TRAINING PROGRAM IN THE APPROPRIATE TRADE.
4. OTHER PROGRAMS ACCEPTABLE TO THE ENFORCING AGENCY.

NOTES:

1. SPECIAL INSPECTORS SHALL BE INDEPENDENT ENTITIES WITH NO FINANCIAL INTEREST IN THE MATERIALS OR THE PROJECT THEY ARE INSPECTING FOR COMPLIANCE WITH THIS CODE.
2. HERS RATERS ARE SPECIAL INSPECTORS CERTIFIED BY THE CALIFORNIA ENERGY COMMISSION (CEC) TO RATE HOMES IN CALIFORNIA ACCORDING TO THE HOME ENERGY RATING SYSTEM (HERS).

[BSC-CG] WHEN REQUIRED BY THE ENFORCING AGENCY, THE OWNER OR THE RESPONSIBLE ENTITY ACTING AS THE OWNER'S AGENT SHALL EMPLOY ONE OR MORE SPECIAL INSPECTORS TO PROVIDE INSPECTION OR OTHER DUTIES NECESSARY TO SUBSTANTIATE COMPLIANCE WITH THIS CODE. SPECIAL INSPECTORS SHALL DEMONSTRATE COMPETENCE TO THE SATISFACTION OF THE ENFORCING AGENCY FOR THE PARTICULAR TYPE OF INSPECTION OR TASK TO BE PERFORMED. IN ADDITION, THE SPECIAL INSPECTOR SHALL HAVE A CERTIFICATION FROM A RECOGNIZED STATE, NATIONAL OR INTERNATIONAL ASSOCIATION, AS DETERMINED BY THE LOCAL AGENCY. THE AREA OF CERTIFICATION SHALL BE CLOSELY RELATED TO THE PRIMARY JOB FUNCTION, AS DETERMINED BY THE LOCAL AGENCY.

NOTE: SPECIAL INSPECTORS SHALL BE INDEPENDENT ENTITIES WITH NO FINANCIAL I INTEREST IN THE MATERIALS OR THE PROJECT THEY ARE INSPECTING FOR COMPLIANCE WITH THIS CODE.

703 VERIFICATIONS
703.1 DOCUMENTATION. DOCUMENTATION USED TO SHOW COMPLIANCE WITH THIS CODE SHALL INCLUDE BUT IS NOT LIMITED TO, CONSTRUCTION DOCUMENTS, PLANS, SPECIFICATIONS, BUILDER OR INSTALLER CERTIFICATION, INSPECTION REPORTS, OR OTHER METHODS ACCEPTABLE TO THE ENFORCING AGENCY WHICH DEMONSTRATE SUBSTANTIAL CONFORMANCE. WHEN SPECIFIC DOCUMENTATION OR SPECIAL INSPECTION IS NECESSARY TO VERIFY COMPLIANCE, THAT METHOD OF COMPLIANCE WILL BE SPECIFIED IN THE APPROPRIATE SECTION OR IDENTIFIED APPLICABLE CHECKLIST.

5.507.4.2 PERFORMANCE METHOD. FOR BUILDINGS LOCATED AS DEFINED IN SECTION 5.507.4.1 OR 5.507.4.1.1, WALL AND ROOF-CEILING ASSEMBLIES EXPOSED TO THE NOISE SOURCE MAKING UP THE BUILDING OR ADDITION ENVELOPE OR ALTERED ENVELOPE SHALL BE CONSTRUCTED TO PROVIDE AN INTERIOR NOISE ENVIRONMENT ATTRIBUTABLE TO EXTERIOR SOURCES THAT DOES NOT EXCEED AN HOURLY EQUIVALENT NOISE LEVEL (LEQ-1HR) OF 50 DBA IN OCCUPIED AREAS DURING ANY HOUR OF OPERATION.

5.507.4.2.1 SITE FEATURES. EXTERIOR FEATURES SUCH AS SOUND WALLS OR EARTH BERMS MAY BE UTILIZED AS APPROPRIATE TO THE BUILDING, ADDITION OR ALTERATION PROJECT TO MITIGATE SOUND MIGRATION TO THE INTERIOR.

5.507.4.2.2 DOCUMENTATION OF COMPLIANCE. AN ACOUSTICAL ANALYSIS DOCUMENTING COMPLYING INTERIOR SOUND LEVELS SHALL BE PREPARED BY PERSONNEL APPROVED BY THE ARCHITECT OR ENGINEER OF RECORD.

5.507.4.3 INTERIOR SOUND TRANSMISSION. WALL AND FLOOR-CEILING ASSEMBLIES SEPARATING TENANT SPACES AND TENANT SPACES AND PUBLIC PLACES SHALL HAVE AN STC OF AT LEAST 40.

NOTE: EXAMPLES OF ASSEMBLIES AND THEIR VARIOUS STC RATINGS MAY BE FOUND AT THE CALIFORNIA OFFICE OF NOISE CONTROL: WWW.TOOLBASE.ORG/PDF/CASESTUDIES/STC_ICC_RATINGS.PDF.

SECTION 5.508 OUTDOOR AIR QUALITY
5.508.1 OZONE DEPLETION AND GREENHOUSE GAS REDUCTIONS. INSTALLATIONS OF HVAC, REFRIGERATION AND FIRE SUPPRESSION EQUIPMENT SHALL COMPLY WITH SECTIONS 5.508.1.1 AND 5.508.1.2.

5.508.1.1 CHLOROFLUOROCARBONS (CFCS). INSTALL HVAC, REFRIGERATION AND FIRE SUPPRESSION EQUIPMENT THAT DO NOT CONTAIN CFCS.

5.508.1.2 HALONS. INSTALL HVAC, REFRIGERATION AND FIRE SUPPRESSION EQUIPMENT THAT DO NOT CONTAIN HALONS.

5.508.2 SUPERMARKET REFRIGERANT LEAK REDUCTION. NEW COMMERCIAL REFRIGERATION SYSTEMS SHALL COMPLY WITH THE PROVISIONS OF THIS SECTION WHEN INSTALLED IN RETAIL FOOD STORES 8,000 SQUARE FEET OR MORE CONDITIONED AREA, AND THAT UTILIZE EITHER REFRIGERATED DISPLAY CASES, OR WALK-IN COOLERS OR FREEZERS CONNECTED TO REMOTE COMPRESSOR UNITS OR CONDENSING UNITS. THE LEAK REDUCTION MEASURES APPLY TO REFRIGERATION SYSTEMS CONTAINING HIGH-GLOBAL-WARMING POTENTIAL (HIGH-GWP) REFRIGERANTS WITH A GWP OF 150 OR GREATER. NEW REFRIGERATION SYSTEMS INCLUDE BOTH NEW FACILITIES AND THE REPLACEMENT OF EXISTING REFRIGERATION SYSTEMS IN EXISTING FACILITIES.

EXCEPTION: REFRIGERATION SYSTEMS CONTAINING LOW-GLOBAL WARMING POTENTIAL (LOW-GWP) REFRIGERANT WITH A GWP VALUE LESS THAN 150 ARE NOT SUBJECT TO THIS SECTION. LOW-GWP REFRIGERANTS ARE NONOZONE-DEPLETING REFRIGERANTS THAT INCLUDE AMMONIA, CARBON DIOXIDE (CO_2), AND POTENTIALLY OTHER REFRIGERANTS.

5.508.2.1 REFRIGERANT PIPING. PIPING COMPLIANT WITH THE CALIFORNIA MECHANICAL CODE SHALL BE INSTALLED TO BE ACCESSIBLE FOR LEAK PROTECTION AND REPAIRS. PIPING RUNS USING THREADED PIPE, COPPER TUBING WITH AN OUTSIDE DIAMETER (OD) LESS THAN 1/4 INCH, FLARED TUBING CONNECTIONS AND SHORT RADIUS ELBOWS SHALL NOT BE USED IN REFRIGERANT SYSTEMS EXCEPT AS NOTED BELOW.

5.508.2.1.1 THREADED PIPE. THREADED CONNECTIONS ARE PERMITTED AT THE COMPRESSOR RACK.

5.508.2.1.2 COPPER PIPE. COPPER TUBING WITH AN OD LESS THAN 1/4 INCH MAY BE USED IN SYSTEMS WITH A REFRIGERANT CHARGE OF 5 POUNDS OR LESS.

5.508.2.1.2.1 ANCHORAGE. ONE-FOURTH-INCH OD TUBING SHALL BE SECURELY CLAMPED TO A RIGID BASE TO KEEP VIBRATION LEVELS BELOW 8 MILS.

5.508.2.1.3 FLARED TUBING CONNECTIONS. DOUBLE-FLARED TUBING CONNECTIONS MAY BE USED FOR PRESSURE CONTROLS, VALVE PILOT LINES AND OIL.

EXCEPTION: SINGLE-FLARED TUBING CONNECTIONS MAY BE USED WITH A MULTIRING SEAL COATED WITH INDUSTRIAL SEALANT SUITABLE FOR USE WITH REFRIGERANTS AND TIGHTENED IN ACCORDANCE WITH MANUFACTURER'S RECOMMENDATIONS.

5.508.2.1.4 ELBOWS. SHORT RADIUS ELBOWS ARE ONLY PERMITTED WHERE SPACE LIMITATIONS PROHIBIT USE OF LONG RADIUS ELBOWS.

5.508.2.2 VALVES. VALVES VALVES AND FITTINGS SHALL COMPLY WITH THE CALIFORNIA MECHANICAL CODE AND AS FOLLOWS.

5.508.2.2.1 PRESSURE RELIEF VALVES. FOR VESSELS CONTAINING HIGH-GWP REFRIGERANT, A RUPTURE DISC SHALL BE INSTALLED BETWEEN THE OUTLET OF THE VESSEL AND THE INLET OF THE PRESSURE RELIEF VALVE.

5.508.2.2.1.1 PRESSURE DETECTION. A PRESSURE GAUGE, PRESSURE TRANSDUCER OR OTHER DEVICE SHALL BE INSTALLED IN THE SPACE BETWEEN THE RUPTURE DISC AND THE RELIEF VALVE INLET TO INDICATE A DISC RUPTURE OR DISCHARGE OF THE RELIEF VALVE.

5.508.2.2.2 ACCESS VALVES. ONLY SCHRADER ACCESS VALVES WITH A BRASS OR STEEL BODY ARE PERMITTED FOR USE.

5.508.2.2.2.1 VALVE CAPS. FOR SYSTEMS WITH A REFRIGERANT CHARGE OF 5 POUNDS OR MORE, VALVE CAPS SHALL BE BRASS OR STEEL AND NOT PLASTIC.

5.508.2.2.2.2 SEAL CAPS. IF DESIGNED FOR IT, THE CAP SHALL HAVE A NEOPRENE O-RING IN PLACE.

5.508.2.2.2.2.1 CHAIN TETHERS. CHAIN TETHERS TO FIT OVR THE STEM ARE REQUIRED FOR VALVES DESIGNED TO HAVE SEAL CAPS.

EXCEPTION: VALVES WITH SEAL CAPS THAT ARE NOT REMOVED FROM THE VALVE DURING STEM OPERATION.

5.508.2.3 REFRIGERATED SERVICE CASES. REFRIGERATED SERVICE CASES HOLDING FOOD PRODUCTS CONTAINING VINEGAR AND SALT SHALL HAVE EVAPORATOR COILS OF CORROSION-RESISTANT MATERIAL, SUCH AS STAINLESS STEEL; OR BE COATED TO PREVENT CORROSION FROM THESE SUBSTANCES.

5.508.2.3.1 COIL COATING. CONSIDERATION SHALL BE GIVEN TO THE HEAT TRANSFER EFFICIENCY OF COIL COATING TO MAXIMIZE ENERGY EFFICIENCY.

5.508.2.4 REFRIGERANT RECEIVERS. REFRIGERANT RECEIVERS WITH CAPACITIES GREATER THAN 200 POUNDS SHALL BE FITTED WITH A DEVICE THAT INDICATES THE LEVEL OF REFRIGERANT IN THE RECEIVER.

5.508.2.5 PRESSURE TESTING. THE SYSTEM SHALL BE PRESSURE TESTED DURING INSTALLATION PRIOR TO EVACUATION AND CHARGING.

5.508.2.5.1 MINIMUM PRESSURE. THE SYSTEM SHALL BE CHARGED WITH REGULATED DRY NITROGEN AND APPROPRIATE TRACER GAS TO BRING SYSTEM PRESSURE UP TO 300 PSIG MINIMUM.

5.508.2.5.2 LEAKS. CHECK THE SYSTEM FOR LEAKS, REPAIR ANY LEAKS, AND RETEST FOR PRESSURE USING THE SAME GAUGE.

5.508.2.5.3 ALLOWABLE PRESSURE CHANGE. THE SYSTEM SHALL STAND, UNALTERED, FOR 24 HOURS WITH NO MORE THAN A +/- ONE POUND PRESSURE CHANGE FROM 300 PSIG, MEASURED WITH THE SAME GAUGE.

5.508.2.6 EVACUATION. THE SYSTEM SHALL BE EVACUATED AFTER PRESSURE TESTING AND PRIOR TO CHARGING.

5.508.2.6.1 FIRST VACUUM. PULL A SYSTEM VACUUM DOWN TO AT LEAST 1000 MICRONS (+/- 50 MICRONS), AND HOLD FOR 30 MINUTES.

5.508.2.6.2 SECOND VACUUM. PULL A SECOND SYSTEM VACUUM TO A MINIMUM OF 500 MICRONS AND HOLD FOR 30 MINUTES.

5.508.2.6.3 THIRD VACUUM. PULL A THIRD VACUUM DOWN TO A MINIMUM OF 300 MICRONS, AND HOLD FOR 24 HOURS WITH A MAXIMUM DRIFT OF 100 MICRONS OVER A 24-HOUR PERIOD.

TABLE 5.504.4.1 - ADHESIVE VOC LIMIT[1,2]

LESS WATER AND LESS EXEMPT COMPOUNDS IN GRAMS PER LITER

ARCHITECTURAL APPLICATIONS	**CURRENT VOC LIMIT**
INDOOR CARPET ADHESIVES	50
CARPET PAD ADHESIVES	50
OUTDOOR CARPET ADHESIVES	150
WOOD FLOORING ADHESIVES	100
RUBBER FLOOR ADHESIVES	60
SUBFLOOR ADHESIVES	50
CERAMIC TILE ADHESIVES	65
VCT & ASPHALT TILE ADHESIVES	50
DRYWALL & PANEL ADHESIVES	50
COVE BASE ADHESIVES	50
MULTIPURPOSE CONSTRUCTION ADHESIVES	70
STRUCTURAL GLAZING ADHESIVES	100
SINGLE-PLY ROOF MEMBRANE ADHESIVES	250
OTHER ADHESIVES NOT SPECIFICALLY LISTED	50
SPECIALTY APPLICATIONS	
PVC WELDING	510
CPVC WELDING	490
ABS WELDING	325
PLASTIC CEMENT WELDING	250
ADHESIVE PRIMER FOR PLASTIC	550
CONTACT ADHESIVE	80
SPECIAL PURPOSE CONTACT ADHESIVE	250
STRUCTURAL WOOD MEMBER ADHESIVE	140
TOP & TRIM ADHESIVE	250
METAL TO METAL	30
PLASTIC FOAMS	50
POROUS MATERIAL (EXCEPT WOOD)	50
WOOD	30
FIBERGLASS	80

1. IF AN ADHESIVE IS USED TO BOND DISSIMILAR SUBSTRATES TOGETHER, THE ADHESIVE WITH THE HIGHEST VOC CONTENT SHALL BE ALLOWED.

2. FOR ADDITIONAL INFORMATION REGARDING METHODS TO MEASURE THE VOC CONTENT SPECIFIED IN THIS TABLE, SEE SOUTH COAST AIR QUALITY MANAGEMENT DISTRICT RULE 1168, www.arb.ca.gov/DRDB/SC/CURHTML/R1168.PDF

TABLE 5.504.4.2 - SEALANT VOC LIMIT

LESS WATER AND LESS EXEMPT COMPOUNDS IN GRAMS PER LITER

SEALANTS	**CURRENT VOC LIMIT**
ARCHITECTURAL	250
MARINE DECK	760
NONMEMBRANE ROOF	300
ROADWAY	250
SINGLE-PLY ROOF MEMBRANE	450
OTHER	420
SEALANT PRIMERS	
ARCHITECTURAL	
NONPOROUS	250
POROUS	775
MODIFIED BITUMINOUS	500
MARINE DECK	760
OTHER	750

NOTE: FOR ADDITIONAL INFORMATION REGARDING METHODS TO MEASURE THE VOC CONTENT SPECIFIED IN THESE TABLES, SEE SOUTH COAST AIR QUALITY MANAGEMENT DISTRICT RULE 1168.

5.504.4.3 PAINTS AND COATINGS. ARCHITECTURAL PAINTS AND COATINGS SHALL COMPLY WITH VOC LIMITS IN TABLE 1 OF THE ARB ARCHITECTURAL COATINGS SUGGESTED CONTROL MEASURE, AS SHOWN IN TABLE 5.504.4.3, UNLESS MORE STRINGENT LOCAL LIMITS APPLY. THE VOC CONTENT LIMIT FOR COATINGS THAT DO NOT MEET THE DEFINITIONS FOR THE SPECIALTY COATINGS CATEGORIES LISTED IN TABLE 5.504.4.3 SHALL BE DETERMINED BY CLASSIFYING THE COATING AS A FLAT, NONFLAT OR NONFLAT-HIGH GLOSS COATING, BASED ON ITS GLOSS, AS DEFINED IN SUBSECTIONS 4.21, 4.36 AND 4.37 OF THE 2007 CALIFORNIA AIR RESOURCES BOARD SUGGESTED CONTROL MEASURE, AND THE CORRESPONDING FLAT, NONFLAT OR NONFLAT-HIGH GLOSS VOC LIMIT IN TABLE 5.504.4.3 SHALL APPLY.

5.504.4.3.1 AEROSOL PAINTS AND COATINGS. AEROSOL PAINTS AND COATINGS SHALL MEET THE PWMIR LIMITS FOR ROC IN SECTION 94522(A)(3) AND OTHER REQUIREMENTS, INCLUDING PROHIBITIONS ON USE OF CERTAIN TOXIC COMPOUNDS AND OZONE DEPLETING SUBSTANCES, IN SECTIONS 94522(C)(2) AND (D)(2) OF CALIFORNIA CODE OF REGULATIONS, TITLE 17, COMMENCING WITH SECTION 94520; AND IN AREAS UNDER THE JURISDICTION OF THE BAY AREA AIR QUALITY MANAGEMENT DISTRICT ADDITIONALLY COMPLY WITH THE PERCENT VOC BY WEIGHT OF PRODUCT LIMITS OF REGULATION 8 RULE 49.

SECTION 5.507 ENVIRONMENTAL COMFORT
5.507.4 ACOUSTICAL CONTROL. EMPLOY BUILDING ASSEMBLIES AND COMPONENTS WITH SOUND TRANSMISSION CLASS (STC) VALUES DETERMINED IN ACCORDANCE WITH ASTM E 90 AND ASTM E 413, OR OUTDOOR-INDOOR SOUND TRANSMISSION CLASS (OITC) DETERMINED IN ACCORDANCE WITH ASTM E 1332, USING EITHER THE PRESCRIPTIVE OR PERFORMANCE METHOD IN SECTION 5.507.4.1 OR 5.507.4.2.

EXCEPTION: BUILDINGS WITH FEW OR NO OCCUPANTS OR WHERE OCCUPANTS ARE NOT LIKELY TO BE AFFECTED BY EXTERIOR NOISE, AS DETERMINED BY THE ENFORCEMENT AUTHORITY, SUCH AS FACTORIES, STADIUMS, STORAGE, ENCLOSED PARKING STRUCTURES AND UTILITY BUILDINGS.

EXCEPTION: [DSA-SS] FOR PUBLIC SCHOOLS AND COMMUNITY COLLEGES, THE REQUIREMENTS OF THIS SECTION AND ALL SUBSECTIONS APPLY ONLY TO NEW CONSTRUCTION.

5.507.4.1 EXTERIOR NOISE TRANSMISSION, PRESCRIPTIVE METHOD. WALL AND ROOF-CEILING ASSEMBLIES EXPOSED TO THE NOISE SOURCE MAKING UP THE BUILDING OR ADDITION ENVELOPE OR ALTERED ENVELOPE SHALL MEET A COMPOSITE STC RATING OF AT LEAST 50 OR A COMPOSITE OITC RATING OF NO LESS THAN 40, WITH EXTERIOR WINDOWS OF A MINIMUM STC OF 40 OR OITC OF 30 IN THE FOLLOWING LOCATIONS:

1. WITHIN THE 65 CNEL NOISE CONTOUR OF AN AIRPORT.

   EXCEPTIONS:

   1. LDN OR CNEL FOR MILITARY AIRPORTS SHALL BE DETERMINED BY THE FACILITY AIR INSTALLATION COMPATIBLE LAND USE ZONE (AICUZ) PLAN.
   2. LDN OR CNEL FOR OTHER AIRPORTS AND HELIPORTS FOR WHICH A LAND USE PLAN HAS NOT BEEN DEVELOPED SHALL BE DETERMINED BY THE LOCAL GENERAL PLAN NOISE ELEMENT.

2. WITHIN THE 65 CNEL OR LDN NOISE CONTOUR OF A FREEWAY OR EXPRESSWAY, RAILROAD, INDUSTRIAL SOURCE OR FIXED-GUIDEWAY SOURCE AS DETERMINED BY THE NOISE ELEMENT OF THE GENERAL PLAN.

5.507.4.1.1. NOISE EXPOSURE WHERE NOISE CONTOURS ARE NOT READILY AVAILABLE. BUILDINGS EXPOSED TO A NOISE LEVEL OF 65 DB L_{EQ} - 1-HR DURING ANY HOUR OF OPERATION SHALL HAVE BUILDING, ADDITION OR ALTERATION EXTERIOR WALL AND ROOF-CEILING ASSEMBLIES EXPOSED TO THE NOISE SOURCE MEETING A COMPOSITE STC RATING OF AT LEAST 45 (OR OITC 35), WITH EXTERIOR WINDOWS OF A MINIMUM STC OF 40 (OR OITC 30).

ELECTRIC VEHICLE SUPPLY EQUIPMENT (EVSE). THE CONDUCTORS, INCLUDING THE UNGROUNDED, GROUNDED, AND EQUIPMENT GROUNDING CONDUCTORS AND THE ELECTRIC VEHICLE CONNECTORS, ATTACHMENT PLUGS, AND ALL OTHER FITTINGS, DEVICES, POWER OUTLETS, OR APPARATUS INSTALLED SPECIFICALLY FOR THE PURPOSE OF TRANSFERRING ENERGY BETWEEN THE PREMISES WIRING AND THE ELECTRIC VEHICLE.

ENERGY EQUIVALENT (NOISE) LEVEL (LEQ). THE LEVEL OF A STEADY NOISE WHICH WOULD HAVE THE SAME ENERGY AS THE FLUCTUATING NOISE LEVEL INTEGRATED OVER THE TIME OF PERIOD OF INTEREST.

EXPRESSWAY. AN ARTERIAL HIGHWAY FOR THROUGH TRAFFIC WHICH MAY HAVE PARTIAL CONTROL OF ACCESS, BUT WHICH MAY OR MAY NOT BE DIVIDED OR HAVE GRADE SEPARATIONS AT INTERSECTIONS.

FREEWAY. A DIVIDED ARTERIAL HIGHWAY WITH FULL CONTROL OF ACCESS AND WITH GRADE SEPARATIONS AT INTERSECTIONS.

GLOBAL WARMING POTENTIAL (GWP). THE RADIATIVE FORCING IMPACT OF ONE MASS-BASED UNIT OF A GIVEN GREENHOUSE GAS RELATIVE TO AN EQUIVALENT UNIT OF CARBON DIOXIDE OVER A GIVEN PERIOD OF TIME. CARBON DIOXIDE IS THE REFERENCE COMPOUND WITH A GWP OF ONE.

GLOBAL WARMING POTENTIAL VALUE (GWP VALUE). A 100-YEAR GWP VALUE PUBLISHED BY THE INTERGOVERNMENTAL PANEL ON CLIMATE CHANGE (IPCC) IN EITHER ITS SECOND ASSESSMENT REPORT (SAR) (IPCC, 1995); OR ITS FOURTH ASSESSMENT A-3 REPORT (AR4) (IPCC, 2007). THE SAR GWP VALUES ARE FOUND IN COLUMN "SAR (100-YR)" OF TABLE 2.14.; THE AR4 GWP VALUES ARE FOUND IN COLUMN "100 YR" OF TABLE 2.14.

HIGH-GWP REFRIGERANT. A COMPOUND USED AS A HEAT TRANSFER FLUID OR GAS THAT IS: (A) A CHLOROFLUOROCARBON, A HYDROCHLOROFLUOROCARBON, A HYDROFLUOROCARBON, A PERFLUOROCARBON, OR ANY COMPOUND OR BLEND OF COMPOUNDS, WITH A GWP VALUE EQUAL TO OR GREATER THAN 150, OR (B) ANY OZONE DEPLETING SUBSTANCE AS DEFINED IN TITLE 40 OF THE CODE OF FEDERAL REGULATIONS, PART 82, SEC.82.3 (AS AMENDED MARCH 10, 2009).

LONG RADIUS ELBOW. PIPE FITTING INSTALLED BETWEEN TWO LENGTHS OF PIPE OR TUBING TO ALLOW A CHANGE OF DIRECTION, WITH A RADIUS 1.5 TIMES THE PIPE DIAMETER.

LOW-GWP REFRIGERANT. A COMPOUND USED AS A HEAT TRANSFER FLUID OR GAS THAT: (A) HAS A GWP VALUE LESS THAN 150, AND (B) IS NOT AN OZONE DEPLETING SUBSTANCE AS DEFINED IN TITLE 40 OF THE CODE OF FEDERAL REGULATIONS, PART 82, SEC.82.3 (AS AMENDED MARCH 10, 2009).

MERV. FILTER MINIMUM EFFICIENCY REPORTING VALUE, BASED ON ASHRAE 52.2-1999.

MAXIMUM INCREMENTAL REACTIVITY (MIR). THE MAXIMUM CHANGE IN WEIGHT OF OZONE FORMED BY ADDING A COMPOUND TO THE "BASE REACTIVE ORGANIC GAS (ROG) MIXTURE" PER WEIGHT OF COMPOUND ADDED, EXPRESSED TO HUNDRETHS OF A GRAM (G O^3/G ROC).

PRODUCT-WEIGHTED MIR (PWMIR). THE SUM OF ALL WEIGHTED-MIR FOR ALL INGREDIENTS IN A PRODUCT SUBJECT TO THIS ARTICLE. THE PWMIR IS THE TOTAL PRODUCT REACTIVITY EXPRESSED TO HUNDREDTHS OF A GRAM OF OZONE FORMED PER GRAM OF PRODUCT (EXCLUDING CONTAINER AND PACKAGING).

PSIG. POUNDS PER SQUARE INCH, GAUGE.

REACTIVE ORGANIC COMPOUND (ROC). ANY COMPOUND THAT HAS THE POTENTIAL, ONCE EMITTED, TO CONTRIBUTE TO OZONE FORMATION IN THE TROPOSPHERE.

SCHRADER ACCESS VALVES. ACCESS FITTINGS WITH A VALVE CORE INSTALLED.

SHORT RADIUS ELBOW. PIPE FITTING INSTALLED BETWEEN TWO LENGTHS OF PIPE OR TUBING TO ALLOW A CHANGE OF DIRECTION, WITH A RADIUS 1.0 TIMES THE PIPE DIAMETER.

SUPERMARKET. FOR THE PURPOSES OF SECTION 5.508.2, A SUPERMARKET IS ANY RETAIL FOOD FACILITY WITH 8,000 SQUARE FEET OR MORE CONDITIONED AREA, AND THAT UTILIZES EITHER REFRIGERATED DISPLAY CASES, OR WALK-IN COOLERS OR FREEZERS CONNECTED TO REMOTE COMPRESSOR UNITS OR CONDENSING UNITS

VOC. A VOLATILE ORGANIC COMPOUND BROADLY DEFINED AS A CHEMICAL COMPOUND BASED ON CARBON CHAINS OR RINGS WITH VAPOR PRESSURES GREATER THAN 0.1 MILLIMETERS OF MERCURY AT ROOM TEMPERATURE. THESE COMPOUNDS TYPICALLY CONTAIN HYDROGEN AND MAY CONTAIN OXYGEN, NITROGEN AND OTHER ELEMENTS. SEE CCR TITLE 17, SECTION 94508(A)

NOTE: WHERE SPECIFIC REGULATIONS ARE CITED FROM DIFFERENT AGENCIES SUCH AS SCAQMD, ARB, ETC., THE VOC DEFINITION INCLUDED IN THAT SPECIFIC REGULATION IS THE ONE THAT PREVAILS FOR THE SPECIFIC MEASURE IN QUESTION

SECTION 5.503 FIREPLACES
5.503.1 FIREPLACES. INSTALL ONLY A DIRECT-VENT SEALED-COMBUSTION GAS OR SEALED WOOD-BURNING FIREPLACE, OR A SEALED WOODSTOVE OR PELLET STOVE, AND REFER TO RESIDENTIAL REQUIREMENTS IN THE CALIFORNIA ENERGY CODE, TITLE 24, PART 6, SUBCHAPTER 7, SECTION 150. WOODSTOVES, PELLET STOVES AND FIREPLACES SHALL COMPLY WITH APPLICABLE LOCAL ORDINANCES.

5.503.1.1 WOODSTOVES. WOODSTOVES AND PELLET STOVES SHALL COMPLY WITH U.S. EPA NEW SOURCE PERFORMANCE STANDARDS (NSPS) EMISSION LIMITS AS APPLICABLE, AND SHALL HAVE A PERMANENT LABEL INDICATING THEY ARE CERTIFIED TO MEET THE EMISSION LIMITS.

SECTION 5.504 POLLUTANT CONTROL
5.504.1 TEMPORARY VENTILATION. THE PERMANENT HVAC SYSTEM SHALL ONLY BE USED DURING CONSTRUCTION IF NECESSARY TO CONDITION THE BUILDING OR AREAS OF ADDITION OR ALTERATION WITHIN THE REQUIRED TEMPERATURE RANGE FOR MATERIAL AND EQUIPMENT INSTALLATION. IF THE HVAC SYSTEM IS USED DURING CONSTRUCTION, USE RETURN AIR FILTERS WITH A MINIMUM EFFICIENCY REPORTING VALUE (MERV) OF 8, BASED ON ASHRAE 52.2-1999, OR AN AVERAGE EFFICIENCY OF 30% BASED ON ASHRAE 52.1-1992 REPLACE ALL FILTERS IMMEDIATELY PRIOR TO OCCUPANCY, OR, IF THE BUILDING IS OCCUPIED DURING ALTERATION, AT THE CONCLUSION OF CONSTRUCTION.

5.504.3 COVERING OF DUCT OPENINGS AND PROTECTION OF MECHANICAL EQUIPMENT DURING CONSTRUCTION. AT THE TIME OF ROUGH INSTALLATION AND DURING STORAGE ON THE CONSTRUCTION SITE UNTIL FINAL STARTUP OF THE HEATING, COOLING AND VENTILATION EQUIPMENT, ALL DUCT AND OTHER RELATED AIR DISTRIBUTION COMPONENT OPENINGS SHALL BE COVERED WITH TAPE, PLASTIC, SHEETMETAL OR OTHER METHODS ACCEPTABLE TO THE ENFORCING AGENCY TO REDUCE THE AMOUNT OF DUST, WATER AND DEBRIS WHICH MAY ENTER THE SYSTEM.

5.504.4 FINISH MATERIAL POLLUTANT CONTROL. FINISH MATERIALS SHALL COMPLY WITH SECTIONS 5.504.4.1 THROUGH 5.504.4.6.

5.504.4.1 ADHESIVES, SEALANTS AND CAULKS. ADHESIVES, SEALANTS, AND CAULKS USED ON THE PROJECT SHALL MEET THE REQUIREMENTS OF THE FOLLOWING STANDARDS:

1. ADHESIVES, ADHESIVE BONDING PRIMERS, ADHESIVE PRIMERS, SEALANTS, SEALANT PRIMERS AND CAULKS SHALL COMPLY WITH LOCAL OR REGIONAL AIR POLLUTION CONTROL OR AIR QUALITY MANAGEMENT DISTRICT RULES WHERE APPLICABLE, OR SCAQMD RULE 1168 VOC LIMITS, AS SHOWN IN TABLES 5.504.4.1 AND 5.504.4.2. SUCH PRODUCTS ALSO SHALL COMPLY WITH THE RULE 1168 PROHIBITION ON THE USE OF CERTAIN TOXIC COMPOUNDS(CHLOROFORM, ETHYLENE DICHLORIDE, METHYLENE CHLORIDE, PERCHLOROETHYLENE AND TRICHLOROETHYLENE), EXCEPT FOR AEROSOL PRODUCTS AS SPECIFIED IN SUBSECTION 2, BELOW.
2. AEROSOL ADHESIVES, AND SMALLER UNIT SIZES OF ADHESIVES, AND SEALANT OR CAULKING COMPOUNDS (IN UNITS OF PRODUCT, LESS PACKAGING, WHICH DO NOT WEIGH MORE THAN ONE POUND AND DO NOT CONSIST OF MORE THAN 16 FLUID OUNCES) SHALL COMPLY WITH STATEWIDE VOC STANDARDS AND OTHER REQUIREMENTS, INCLUDING PROHIBITIONS ON USE OF CERTAIN TOXIC COMPOUNDS, OF CALIFORNIA CODE OF REGULATIONS, TITLE 17, COMMENCING WITH SECTION 94507.

5.410.2.5.1 SYSTEMS MANUAL. [N] DOCUMENTATION OF THE OPERATIONAL ASPECTS OF THE BUILDING SHALL BE COMPLETED WITHIN THE SYSTEMS MANUAL AND DELIVERED TO THE BUILDING OWNER OR REPRESENTATIVE. THE SYSTEMS MANUAL SHALL INCLUDE THE FOLLOWING:

1. SITE INFORMATION, INCLUDING FACILITY DESCRIPTION, HISTORY AND CURRENT REQUIREMENTS.
2. SITE CONTACT INFORMATION.
3. BASIC OPERATIONS AND MAINTENANCE, INCLUDING GENERAL SITE OPERATING PROCEDURES, BASIC TROUBLESHOOTING, RECOMMENDED MAINTENANCE REQUIREMENTS, SITE EVENTS LOG.
4. MAJOR SYSTEMS.
5. SITE EQUIPMENT INVENTORY AND MAINTENANCE NOTES.
6. A COPY OF VERIFICATIONS REQUIRED BY THE ENFORCING AGENCY OR THIS CODE.
7. OTHER RESOURCES AND DOCUMENTATION, IF APPLICABLE.

5.410.2.5.2 SYSTEMS OPERATIONS TRAINING. [N] A PROGRAM FOR TRAINING OF THE APPROPRIATE MAINTENANCE STAFF FOR EACH EQUIPMENT TYPE AND/OR SYSTEM SHALL BE DEVELOPED AND DOCUMENTED IN THE COMMISSIONING REPORT AND SHALL INCLUDE THE FOLLOWING:

1. SYSTEM/EQUIPMENT OVERVIEW (WHAT IT IS, WHAT IT DOES AND WITH WHAT OTHER SYSTEMS AND/OR EQUIPMENT IT INTERFACES).
2. REVIEW AND DEMONSTRATION OF SERVICING/PREVENTIVE MAINTENANCE.
3. REVIEW OF THE INFORMATION IN THE SYSTEMS MANUAL.
4. REVIEW OF THE RECORD DRAWINGS ON THE SYSTEM/EQUIPMENT.

5.410.2.6 COMMISSIONING REPORT. [N] A REPORT OF COMMISSIONING PROCESS ACTIVITIES UNDERTAKEN THROUGH THE DESIGN AND CONSTRUCTION PHASES OF THE BUILDING PROJECT SHALL BE COMPLETED AND PROVIDED TO THE OWNER OR REPRESENTATIVE.

5.410.4 TESTING AND ADJUSTING. NEW BUILDINGS LESS THAN 10,000 SQUARE FEET. TESTING AND ADJUSTING OF SYSTEMS SHALL BE REQUIRED FOR NEW BUILDINGS LESS THAN 10,000 SQUARE FEET OR NEW SYSTEMS TO SERVE AN ADDITION OR ALTERATION SUBJECT TO SECTION 303.1.

5.410.4.2 (RESERVED)

NOTE: FOR ENERGY-RELATED SYSTEMS UNDER THE SCOPE (SECTION 100) OF THE CALIFORNIA ENERGY CODE, INCLUDING HEATING, VENTILATION, AIR CONDITIONING (HVAC) SYSTEMS AND CONTROLS, INDOOR LIGHTING SYSTEM AND CONTROLS, AS WELL AS WATER HEATING SYSTEMS AND CONTROLS, REFER TO CALIFORNIA ENERGY CODE SECTION 120.8 FOR COMMISSIONING REQUIREMENTS AND SECTIONS 120.5, 120.6, 130.4, AND 140.9(B)3 FOR ADDITIONAL TESTING REQUIREMENTS OF SPECIFIC SYSTEMS.

5.410.4.2 SYSTEMS. DEVELOP A WRITTEN PLAN OF PROCEDURES FOR TESTING AND ADJUSTING SYSTEMS. SYSTEMS TO BE INCLUDED FOR TESTING AND ADJUSTING SHALL INCLUDE AT A MINIMUM, AS APPLICABLE TO THE PROJECT:

1. RENEWABLE ENERGY SYSTEMS.
2. LANDSCAPE IRRIGATION SYSTEMS.
3. WATER REUSE SYSTEMS.

5.410.4.3 PROCEDURES. PERFORM TESTING AND ADJUSTING PROCEDURES IN ACCORDANCE WITH MANUFACTURER'S SPECIFICATIONS AND APPLICABLE STANDARDS ON EACH SYSTEM.

5.410.4.3.1 HVAC BALANCING. IN ADDITION TO TESTING AND ADJUSTING, BEFORE A NEW SPACE-CONDITIONING SYSTEM SERVING A BUILDING OR SPACE IS OPERATED FOR NORMAL USE, THE SYSTEM SHALL BE BALANCED IN ACCORDANCE WITH THE PROCEDURES DEFINED BY THE TESTING ADJUSTING AND BALANCING BUREAU NATIONAL STANDARDS; THE NATIONAL ENVIRONMENTAL BALANCING BUREAU PROCEDURAL STANDARDS; ASSOCIATED AIR BALANCE COUNCIL NATIONAL STANDARDS OR AS APPROVED BY THE ENFORCING AGENCY.

5.410.4.4 REPORTING. AFTER COMPLETION OF TESTING, ADJUSTING AND BALANCING, PROVIDE A FINAL REPORT OF TESTING SIGNED BY THE INDIVIDUAL RESPONSIBLE FOR PERFORMING THESE SERVICES.

5.410.4.5 OPERATION AND MAINTENANCE (O & M) MANUAL. PROVIDE THE BUILDING OWNER OR REPRESENTATIVE WITH DETAILED OPERATING AND MAINTENANCE INSTRUCTIONS AND COPIES OF GUARANTIES/WARRANTIES FOR EACH SYSTEM. O & M INSTRUCTIONS SHALL BE CONSISTENT WITH OSHA REQUIREMENTS IN CCR, TITLE 8, SECTION 5142, AND OTHER RELATED REGULATIONS

5.410.4.5.1 INSPECTIONS AND REPORTS. INCLUDE A COPY OF ALL INSPECTION VERIFICATIONS AND REPORTS REQUIRED BY THE ENFORCING AGENCY.

DIVISION 5.5 ENVIRONMENTAL QUALITY

SECTION 5.501 GENERAL
5.501.1 SCOPE. THE PROVISIONS OF THIS CHAPTER SHALL OUTLINE MEANS OF REDUCING THE QUANTITY OF AIR CONTAMINANTS THAT ARE ODOROUS, IRRITATING, AND/OR HARMFUL TO THE COMFORT AND WELL-BEING OF A BUILDING'S INSTALLERS, OCCUPANTS AND NEIGHBORS.

SECTION 5.502 DEFINITIONS
5.502.1 DEFINITIONS. THE FOLLOWING TERMS ARE DEFINED IN CHAPTER 2 (AND ARE INCLUDED HERE FOR REFERENCE)

ARTERIAL HIGHWAY. A GENERAL TERM DENOTING A HIGHWAY PRIMARILY FOR THROUGH TRAFFIC USUALLY ON A CONTINUOUS ROUTE.

A-WEIGHTED SOUND LEVEL (DBA). THE SOUND PRESSURE LEVEL IN DECIBELS AS MEASURED ON A SOUND LEVEL METER USING THE INTERNATIONALLY STANDARDIZED A-WEIGHTING FILTER OR AS COMPUTED FROM SOUND SPECTRAL DATA TO WHICH A-WEIGHTING ADJUSTMENTS HAVE BEEN MADE.

1 BTU/HOUR. BRITISH THERMAL UNITS PER HOUR, ALSO REFERRED TO AS BTU. THE AMOUNT OF HEAT REQUIRED TO RAISE ONE POUND OF WATER ONE DEGREE FAHRENHEIT PER HOUR, A COMMON MEASURE OF HEAT TRANSFER RATE. A TON OF REFRIGERATION IS 12,000 BTU, THE AMOUNT OF HEAT REQUIRED TO MELT A TON (2,000 POUNDS) OF ICE AT 32^0 FAHRENHEIT.

COMMUNITY NOISE EQUIVALENT LEVEL (CNEL). A METRIC SIMILAR TO THE DAY-NIGHT AVERAGE SOUND LEVEL (LDN), EXCEPT THAT A 5 DECIBEL ADJUSTMENT IS ADDED TO THE EQUIVALENT CONTINUOUS SOUND EXPOSURE LEVEL FOR EVENING HOURS (7PM TO 10PM) IN ADDITION TO THE 10 DB NIGHTTIME ADJUSTMENT USED IN THE LDN.

COMPOSITE WOOD PRODUCTS. COMPOSITE WOOD PRODUCTS INCLUDE HARDWOOD PLYWOOD, PARTICLEBOARD AND MEDIUM DENSITY FIBERBOARD. "COMPOSITE WOOD PRODUCTS" DOES NOT INCLUDE HARDBOARD, STRUCTURAL PLYWOOD, STRUCTURAL PANELS, STRUCTURAL COMPOSITE LUMBER, ORIENTED STRAND BOARD, GLUED LAMINATED TIMBER, TIMBER, PREFABRICATED WOOD I-JOISTS OR FINGER-JOINTED LUMBER, ALL AS SPECIFIED IN CALIFORNIA CODE OF REGULATIONS (CCR), TITLE 17, SECTION 93120.1(A).

NOTE: SEE CCR, TITLE 17, SECTION 93120.1.

DAY-NIGHT AVERAGE SOUND LEVEL (LDN). THE A-WEIGHTED EQUIVALENT CONTINUOUS SOUND EXPOSURE LEVEL FOR A 24-HOUR PERIOD WITH A 10 DB ADJUSTMENT ADDED TO SOUND LEVELS OCCURRING DURING NIGHTTIME HOURS (10P.M. TO 7 A.M.).

DECIBEL (DB). A MEASURE ON A LOGARITHMIC SCALE OF THE MAGNITUDE OF A PARTICULAR QUANTITY (SUCH AS SOUND PRESSURE, SOUND POWER, SOUND INTENSITY) WITH RESPECT TO A REFERENCE QUANTITY.

ELECTRIC VEHICLE (EV). AN AUTOMOTIVE-TYPE VEHICLE FOR ON-ROAD USE, SUCH AS PASSENGER AUTOMOBILES, BUSES, TRUCKS, VANS, NEIGHBORHOOD ELECTRIC VEHICLES, ELECTRIC MOTORCYCLES, AND THE LIKE, PRIMARILY POWERED BY AN ELECTRIC MOTOR THAT DRAWS CURRENT FROM A RECHARGEABLE STORAGE BATTERY, FUEL CELL, PHOTOVOLTAIC ARRAY, OR OTHER SOURCE OF ELECTRIC CURRENT. PLUG-IN HYBRID ELECTRIC VEHICLES (PHEV) ARE CONSIDERED ELECTRIC VEHICLES. FOR PURPOSES OF THE CALIFORNIA ELECTRICAL CODE, OFF-ROAD, SELF-PROPELLED ELECTRIC VEHICLES, SUCH AS INDUSTRIAL TRUCKS, HOISTS, LIFTS, TRANSPORTS, GOLF CARTS, AIRLINE GROUND SUPPORT EQUIPMENT, TRACTORS, BOATS, AND THE LIKE, ARE NOT INCLUDED.

ELECTRIC VEHICLE CHARGING STATION(S) (EVCSJ). ONE OR MORE SPACES INTENDED FOR CHARGING ELECTRIC VEHICLES.

PLANS PREPARED BY:
Blair, Church & Flynn
CONSULTING ENGINEERS
451 Clovis Avenue, Suite 200
Clovis, California 93612
Tel (559) 326-1400
Fax (559) 326-1500

REGISTERED PROFESSIONAL ENGINEER
PAIGE E. NOGA
No. 78,395
CIVIL
STATE OF CALIFORNIA
12/3/2021
Date Signed:

NO.	REVISIONS	DATE	SAP WO	SUPV	APPROVED	ENGR	CK'D	MADE	P.E.
1	ADDENDUM #1	03-19-2021				PN	PN	JR	PN
2	ENVIRONMENTAL HEALTH PLAN CHECK REVISIONS	06-18-2021				PN	PN	JR	PN
3	ADDENDUM #2	12-03-2021				PN	PN	JR	PN
4	ADDENDUM #3	02-18-2022				PN	PN	JR	PN

REFERENCE DRAWINGS | REFERENCE DRAWINGS

LOCATION: BISHOP, CALIFORNIA

BISHOP SERVICE CENTER
SITE DEVELOPEMENT
CALGREEN CHECK LIST

VOLUME 1

SOUTHERN CALIFORNIA EDISON
An EDISON INTERNATIONAL Company

SHEET NO. C0.4a
SCALE: N/A
5 OF 66 SHTS.

100% CONSTRUCTION DOCUMENTS (12-03-2021)

Drawing: P:\219-0301\Site\productiondrawings\01 - Site\219301_T0.4a_CalGreen Checklist.dwg; C0.4a CalGreen Check List - BCF.ctb
Plot by: jredelfs Feb 23, 2022 - 7:26am

SOUTHERN CALIFORNIA EDISON
2012 - 5 SIZE

A B C D E F G H

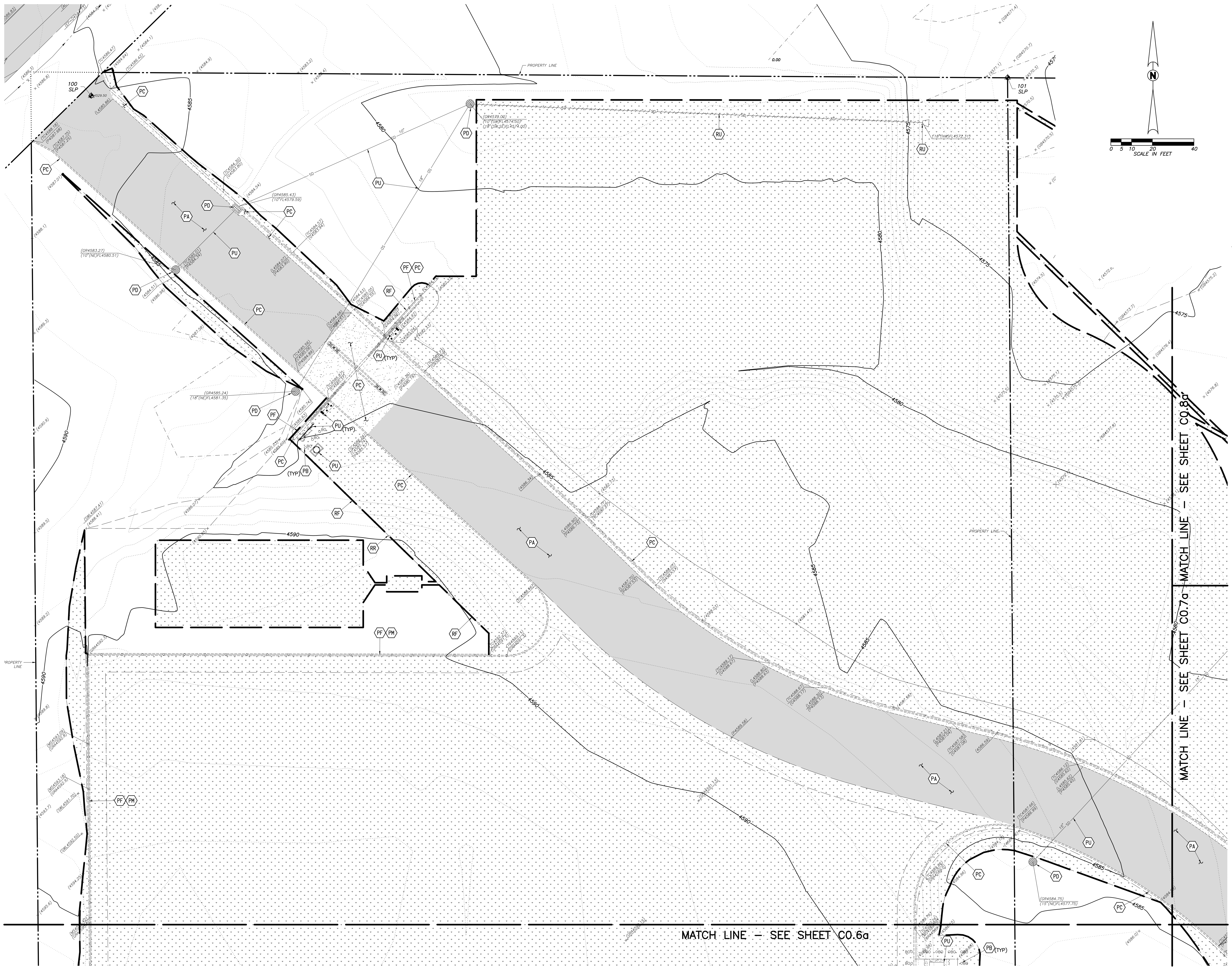

DEMOLITION LEGEND:

PA	PROTECT EXISTING ASPHALT IMPROVEMENT TO REMAIN
PB	PROTECT EXISTING BOLLARD TO REMAIN
PC	PROTECT EXISTING CONCRETE IMPROVEMENTS TO REMAIN
PD	PROTECT EXISTING STORM DRAIN IMPROVEMENTS TO REMAIN
PF	PROTECT EXISTING FENCE TO REMAIN
PG	PROTECT EXISTING GUY WIRE TO REMAIN
PL	EXISTING UTILITY POLE, PROTECT IN PLACE
PM	PROTECT EXISTING MOWSTRIP TO REMAIN
PU	EXISTING UTILITY, PROTECT IN PLACE
RA	REMOVE AND LAWFULLY DISPOSE OF ASPHALT CONCRETE PAVEMENT
RC	REMOVE AND LAWFULLY DISPOSE OF CONCRETE IMPROVEMENTS
RF	REMOVE AND REINSTALL FENCE FABRIC TO CONSTRUCT CONCRETE MOW STRIP PER SITE PLAN
RR	REMOVE AND REINSTALL CHAIN LINK FOR INSTALLATION OF MOWSTRIP
RU	REMOVE UTILITY
SC	SAWCUT FULL DEPTH
SD	STORM DRAIN LINE TO BE CAP AND LAWFULLY DISPOSED OF
	LIMITS OF ASPHALT CONCRETE IMPROVEMENTS PAVEMENT REMOVAL
	LIMITS OF CONCRETE REMOVAL
	LIMITS OF VEGETATION REMOVAL

TOPOGRAPHIC LEGEND:

AC	ASPHALTIC CONCRETE
BS	BOTTOM SLOPE
C	CONCRETE
GB	GRADE BREAK
GR	GRATE
GRA	GRAVEL
L	LIP OF GUTTER
TOP	TOP OF POLE
(4580.5)	EXISTING GROUND ELEVATION
	BM=BENCHMARK; OR TBM=TEMPORARY BENCHMARK
312.55	SURVEY CONTROL POINT
GUY	GUY WIRE
JP	JOINT POLE
PP	POWER POLE
	SLOPE
.5"HB	HOSE BIBB; DIAMETER AS SHOWN
	CHAIN LINK FENCE
	DIRT
	EDGE OF ASPHALT CONCRETE PAVEMENT
	FLOWLINE AND DIRECTION
	GRADE BREAK
	GRAVEL
	ROCK
4560	MAJOR CONTOUR
	MINOR CONTOUR
C	COMMUNICATIONS LINE
OE	OVERHEAD ELECTRIC
OET	OVERHEAD ELECTRIC AND TELEPHONE
SD	STORM DRAIN LINE
	PROPERTY LINE
	RIGHT–OF–WAY
	ROADWAY CENTERLINE

DEMOLITION NOTES:

1. THE "LIMIT OF DEMOLITION" SHOWN IS APPROXIMATE AND IS GENERALLY CONSIDERED TO BE THE MINIMUM REMOVAL REQUIREMENTS. CONTRACTOR MUST COORDINATE AS NOTED IN THE LEGEND.
2. CONTRACTOR SHALL LEGALLY DISPOSE OF ALL DEMOLISHED MATERIALS OFF SITE.
3. CONTRACTOR SHALL PROTECT ALL EXISTING UTILITY IMPROVEMENTS NOT SPECIFICALLY DESIGNATED FOR REMOVAL.
4. THE ON–SITE UNDERGROUND UTILITIES SHOWN ON THIS SHEET ARE AT AN APPROXIMATE LOCATION. THE EXTENT, LOCATIONS AND SIZES ARE UNKNOWN. THE CONTRACTOR SHALL POTHOLE TO LOCATE AND VERIFY THE UNDERGROUND UTILITY LINES PRIOR TO REMOVAL.
5. CONTRACTOR TO PROTECT AND PRESERVE IN PLACE ANY FOUND SURVEY MONUMENTS. ANY MONUMENTS DISTURBED SHALL BE RESET BY A LICENSED SURVEYOR AND THE APPROPRIATE PAPERWORK FILED WITH THE CITY OR COUNTY.
6. ALL HAZARDOUS MATERIALS ENCOUNTERED DURING SITE DEMOLITION SHALL BE REMEDIATED AND DISPOSED OF PER STATE AND EPA REQUIREMENTS.
7. CONTRACTOR SHALL CONTACT AND COORDINATE WITH ALL UTILITY AGENCIES PRIOR TO THE START OF ANY DEMOLITION OR CONSTRUCTION.
8. ANY EXISTING UTILITIES AND/OR IMPROVEMENTS THAT BECOME DAMAGED DURING CONSTRUCTION SHALL BE COMPLETELY RESTORED TO THE SATISFACTION OF THE OWNER AND AGENCY HAVING AUTHORITY, AT THE CONTRACTOR'S SOLE EXPENSE.

UTILITY NOTE:

UTILITY INFORMATION SHOWN HEREON IS BASED ON RECORD INFORMATION SUPPLIED TO THE ENGINEER BY UTILITY COMPANIES, PUBLIC AGENCIES AND THE PROPERTY OWNER, TOGETHER WITH OBSERVATION OF VISIBLE EVIDENCE BY A FIELD SURVEY. THE ENGINEER CAN MAKE NO GUARANTEE AS TO THE ACCURACY OR COMPLETENESS OF THE UNDERGROUND UTILITY FACILITIES SHOWN. PRIOR TO ANY SITE EXCAVATIONS, THE CONTRACTOR SHALL CONTACT THE OWNER AND UNDERGROUND SERVICE ALERT (USA) AND REQUEST THAT THEY IDENTIFY THE LOCATION OF ALL UNDERGROUND UTILITIES AT THE SITE.

SURVEY NOTE:

THIS TOPOGRAPHIC SURVEY LOCATES SPECIFIC PHYSICAL FEATURES OF THE SITE AND THEIR ELEVATION AS DETERMINED NECESSARY BY THE PROJECT ENGINEER. IT IS NOT A COMPLETE TOPOGRAPHIC SURVEY OF THE SITE. THE INFORMATION SHOWN REFLECTS THE DATA OBTAINED BY FIELD SURVEY CONDUCTED ON APRIL 13, 2015.

BENCHMARK:

SET SPIKE IN TIN.

POINT #11 USED AS A TBM

ELEVATION = 4549.9038'

PLANS PREPARED BY:
Blair, Church & Flynn
CONSULTING ENGINEERS
451 Clovis Avenue, Suite 200
Clovis, California 93612
Tel (559) 326-1400
Fax (559) 326-1500

REGISTERED PROFESSIONAL ENGINEER PAIGE E. NOGA No. 78,395 CIVIL STATE OF CALIFORNIA
12/3/2021
Date Signed:

NO.	REVISIONS	DATE	SAP WO	SUPV	APPROVED	ENGR	CK'D	MADE	P.E.
1	ADDENDUM #1	03-19-2021				PN	PN	JR	PN
2	ENVIRONMENTAL HEALTH PLAN CHECK REVISIONS	06-18-2021				PN	PN	JR	PN
3	ADDENDUM #2	12-03-2021				PN	PN	JR	PN
4	ADDENDUM #3	02-18-2022				PN	PN	JR	PN

REFERENCE DRAWINGS	REFERENCE DRAWINGS	NO.	REVISIONS	DATE	SAP WO	SUPV	APPROVED	ENGR	CK'D	MADE	P.E.

LOCATION: BISHOP, CALIFORNIA

BISHOP SERVICE CENTER
SITE DEVELOPEMENT
TOPOGRAPHIC SURVEY AND DEMOLITION PLAN

VOLUME 1

SOUTHERN CALIFORNIA EDISON An EDISON INTERNATIONAL Company

SHEET NO. C0.5a

SCALE: AS NOTED

6 OF 66 SHTS.

100% CONSTRUCTION DOCUMENTS (12-03-2021)

0 5 10 20 40
SCALE IN FEET

DEMOLITION LEGEND:

PA	PROTECT EXISTING ASPHALT IMPROVEMENT TO REMAIN
PB	PROTECT EXISTING BOLLARD TO REMAIN
PC	PROTECT EXISTING CONCRETE IMPROVEMENTS TO REMAIN
PD	PROTECT EXISTING STORM DRAIN IMPROVEMENTS TO REMAIN
PF	PROTECT EXISTING FENCE TO REMAIN
PG	PROTECT EXISTING GUY WIRE TO REMAIN
PL	EXISTING UTILITY POLE, PROTECT IN PLACE
PM	PROTECT EXISTING MOWSTRIP TO REMAIN
PU	EXISTING UTILITY, PROTECT IN PLACE
RA	REMOVE AND LAWFULLY DISPOSE OF ASPHALT CONCRETE PAVEMENT
RC	REMOVE AND LAWFULLY DISPOSE OF CONCRETE IMPROVEMENTS
RF	REMOVE AND REINSTALL FENCE FABRIC TO CONSTRUCT CONCRETE MOW STRIP PER SITE PLAN
RR	REMOVE AND REINSTALL CHAIN LINK FOR INSTALLATION OF MOWSTRIP
RU	REMOVE UTILITY
SC	SAWCUT FULL DEPTH
SD	STORM DRAIN LINE TO BE CAP AND LAWFULLY DISPOSED OF
	LIMITS OF ASPHALT CONCRETE IMPROVEMENTS PAVEMENT REMOVAL
	LIMITS OF CONCRETE REMOVAL
	LIMITS OF VEGETATION REMOVAL

DEMOLITION NOTES:

1. THE "LIMIT OF DEMOLITION" SHOWN IS APPROXIMATE AND IS GENERALLY CONSIDERED TO BE THE MINIMUM REMOVAL REQUIREMENTS. CONTRACTOR MUST COORDINATE AS NOTED IN THE LEGEND.
2. CONTRACTOR SHALL LEGALLY DISPOSE OF ALL DEMOLISHED MATERIALS OFF SITE.
3. CONTRACTOR SHALL PROTECT ALL EXISTING UTILITY IMPROVEMENTS NOT SPECIFICALLY DESIGNATED FOR REMOVAL.
4. THE ON-SITE UNDERGROUND UTILITIES SHOWN ON THIS SHEET ARE AT AN APPROXIMATE LOCATION. THE EXTENT, LOCATIONS AND SIZES ARE UNKNOWN. THE CONTRACTOR SHALL POTHOLE TO LOCATE AND VERIFY THE UNDERGROUND UTILITY LINES PRIOR TO REMOVAL.
5. CONTRACTOR TO PROTECT AND PRESERVE IN PLACE ANY FOUND SURVEY MONUMENTS. ANY MONUMENTS DISTURBED SHALL BE RESET BY A LICENSED SURVEYOR AND THE APPROPRIATE PAPERWORK FILED WITH THE CITY OR COUNTY.
6. ALL HAZARDOUS MATERIALS ENCOUNTERED DURING SITE DEMOLITION SHALL BE REMEDIATED AND DISPOSED OF PER STATE AND EPA REQUIREMENTS.
7. CONTRACTOR SHALL CONTACT AND COORDINATE WITH ALL UTILITY AGENCIES PRIOR TO THE START OF ANY DEMOLITION OR CONSTRUCTION.
8. ANY EXISTING UTILITIES AND/OR IMPROVEMENTS THAT BECOME DAMAGED DURING CONSTRUCTION SHALL BE COMPLETELY RESTORED TO THE SATISFACTION OF THE OWNER AND AGENCY HAVING AUTHORITY, AT THE CONTRACTOR'S SOLE EXPENSE.

UTILITY NOTE:

UTILITY INFORMATION SHOWN HEREON IS BASED ON RECORD INFORMATION SUPPLIED TO THE ENGINEER BY UTILITY COMPANIES, PUBLIC AGENCIES AND THE PROPERTY OWNER, TOGETHER WITH OBSERVATION OF VISIBLE EVIDENCE BY A FIELD SURVEY. THE ENGINEER CAN MAKE NO GUARANTEE AS TO THE ACCURACY OR COMPLETENESS OF THE UNDERGROUND UTILITY FACILITIES SHOWN. PRIOR TO ANY SITE EXCAVATIONS, THE CONTRACTOR SHALL CONTACT THE OWNER AND UNDERGROUND SERVICE ALERT (USA) AND REQUEST THAT THEY IDENTIFY THE LOCATION OF ALL UNDERGROUND UTILITIES AT THE SITE.

SURVEY NOTE:

THIS TOPOGRAPHIC SURVEY LOCATES SPECIFIC PHYSICAL FEATURES OF THE SITE AND THEIR ELEVATION AS DETERMINED NECESSARY BY THE PROJECT ENGINEER. IT IS NOT A COMPLETE TOPOGRAPHIC SURVEY OF THE SITE. THE INFORMATION SHOWN REFLECTS THE DATA OBTAINED BY FIELD SURVEY CONDUCTED ON APRIL 13, 2015.

BENCHMARK:

SET SPIKE IN TIN.

POINT #11 USED AS A TBM

ELEVATION = 4549.9038'

TOPOGRAPHIC LEGEND:

AC	ASPHALTIC CONCRETE
BS	BOTTOM SLOPE
C	CONCRETE
GB	GRADE BREAK
GR	GRATE
GRA	GRAVEL
L	LIP OF GUTTER
TOP	TOP OF POLE
(4580.5)	EXISTING GROUND ELEVATION
	BM=BENCHMARK; OR TBM=TEMPORARY BENCHMARK
312.55	SURVEY CONTROL POINT
GUY	GUY WIRE
JP	JOINT POLE
PP	POWER POLE
	SLOPE
.5"HB	HOSE BIBB; DIAMETER AS SHOWN
	CHAIN LINK FENCE
	DIRT
	EDGE OF ASPHALT CONCRETE PAVEMENT
	FLOWLINE AND DIRECTION
	GRADE BREAK
	GRAVEL
	ROCK
4560	MAJOR CONTOUR
	MINOR CONTOUR
C	COMMUNICATIONS LINE
OE	OVERHEAD ELECTRIC
OET	OVERHEAD ELECTRIC AND TELEPHONE
SD	STORM DRAIN LINE
	PROPERTY LINE
	RIGHT-OF-WAY
	ROADWAY CENTERLINE

REGISTERED PROFESSIONAL ENGINEER PAIGE E. NOGA No. 78,395 CIVIL STATE OF CALIFORNIA

12/3/2021
Date Signed:

PLANS PREPARED BY:
Blair, Church & Flynn
CONSULTING ENGINEERS
451 Clovis Avenue, Suite 200
Clovis, California 93612
Tel (559) 326-1400
Fax (559) 326-1500

NO.	REVISIONS	DATE	SAP WO	SUPV	APPROVED	ENGR	CK'D	MADE	P.E.
1	ADDENDUM #1	03-19-2021				PN	PN	JR	PN
2	ENVIRONMENTAL HEALTH PLAN CHECK REVISIONS	06-18-2021				PN	PN	JR	PN
3	ADDENDUM #2	12-03-2021				PN	PN	JR	PN
4	ADDENDUM #3	02-18-2022				PN	PN	JR	PN

REFERENCE DRAWINGS	REFERENCE DRAWINGS	NO.	REVISIONS	DATE	SAP WO	SUPV	APPROVED	ENGR	CK'D	MADE	P.E.

LOCATION: BISHOP, CALIFORNIA

BISHOP SERVICE CENTER
SITE DEVELOPEMENT
TOPOGRAPHIC SURVEY AND DEMOLITION PLAN

VOLUME 1

SOUTHERN CALIFORNIA EDISON An EDISON INTERNATIONAL Company

SHEET NO. C0.6a

SCALE: AS NOTED

7 OF 66 SHTS.

100% CONSTRUCTION DOCUMENTS (12-03-2021)

SOUTHERN CALIFORNIA EDISON
2012 - 5 SIZE

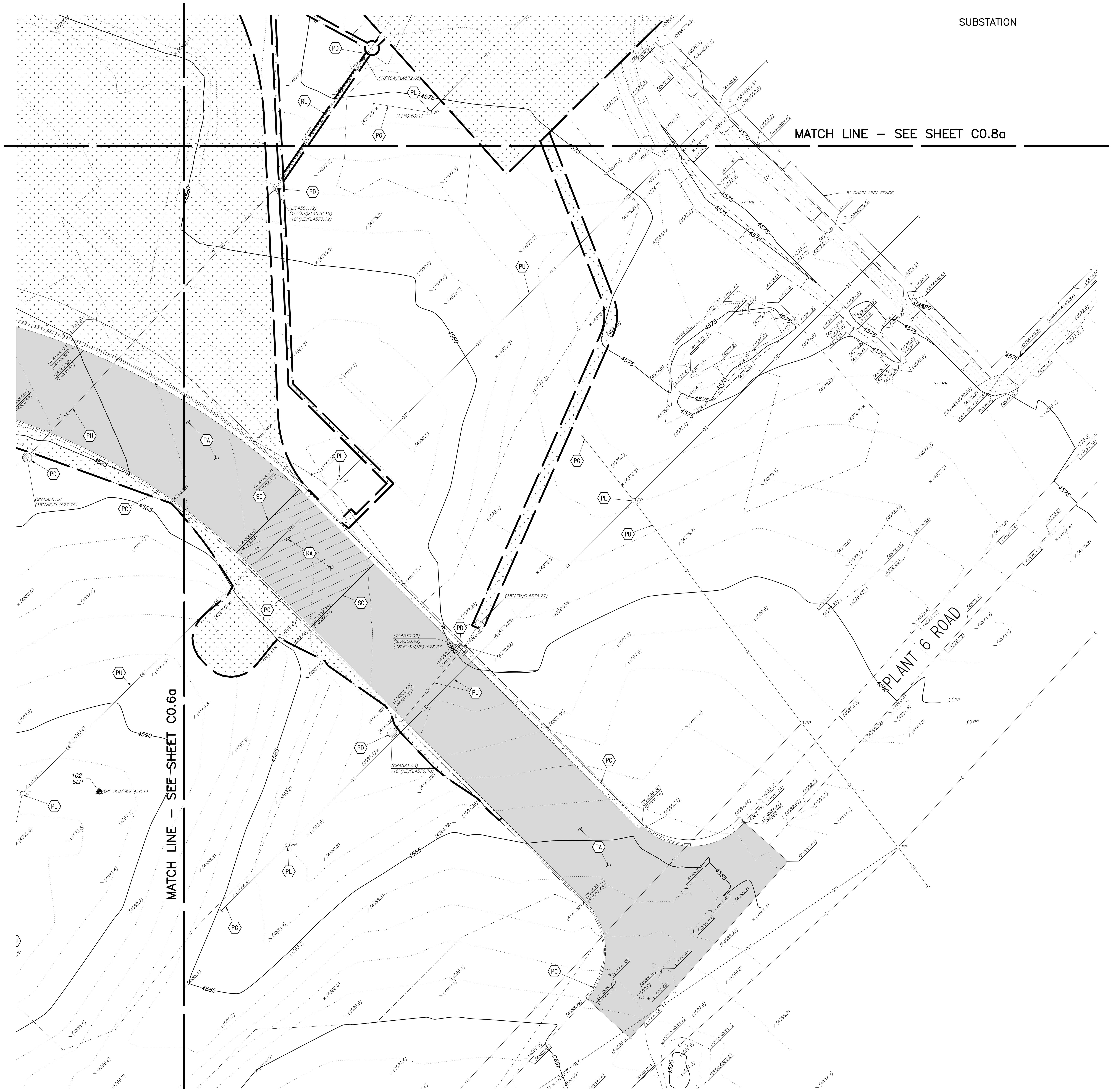

TOPOGRAPHIC LEGEND:

AC	ASPHALTIC CONCRETE
BS	BOTTOM SLOPE
C	CONCRETE
GB	GRADE BREAK
GR	GRATE
GRA	GRAVEL
L	LIP OF GUTTER
TOP	TOP OF POLE
(4580.5)	EXISTING GROUND ELEVATION
	BM=BENCHMARK; OR TBM=TEMPORARY BENCHMARK
312.55	SURVEY CONTROL POINT
GUY	GUY WIRE
JP	JOINT POLE
PP	POWER POLE
	SLOPE
.5"HB	HOSE BIBB; DIAMETER AS SHOWN
	CHAIN LINK FENCE
	DIRT
	EDGE OF ASPHALT CONCRETE PAVEMENT
	FLOWLINE AND DIRECTION
	GRADE BREAK
	GRAVEL
	ROCK
4560	MAJOR CONTOUR
	MINOR CONTOUR
C	COMMUNICATIONS LINE
OE	OVERHEAD ELECTRIC
OET	OVERHEAD ELECTRIC AND TELEPHONE
SD	STORM DRAIN LINE
	PROPERTY LINE
	RIGHT-OF-WAY
	ROADWAY CENTERLINE

DEMOLITION LEGEND:

PA	PROTECT EXISTING ASPHALT IMPROVEMENT TO REMAIN
PB	PROTECT EXISTING BOLLARD TO REMAIN
PC	PROTECT EXISTING CONCRETE IMPROVEMENTS TO REMAIN
PD	PROTECT EXISTING STORM DRAIN IMPROVEMENTS TO REMAIN
PF	PROTECT EXISTING FENCE TO REMAIN
PG	PROTECT EXISTING GUY WIRE TO REMAIN
PL	EXISTING UTILITY POLE, PROTECT IN PLACE
PM	PROTECT EXISTING MOWSTRIP TO REMAIN
PU	EXISTING UTILITY, PROTECT IN PLACE
RA	REMOVE AND LAWFULLY DISPOSE OF ASPHALT CONCRETE PAVEMENT
RC	REMOVE AND LAWFULLY DISPOSE OF CONCRETE IMPROVEMENTS
RF	REMOVE AND REINSTALL FENCE FABRIC TO CONSTRUCT CONCRETE MOW STRIP PER SITE PLAN
RR	REMOVE AND REINSTALL CHAIN LINK FOR INSTALLATION OF MOWSTRIP
RU	REMOVE UTILITY
SC	SAWCUT FULL DEPTH
SD	STORM DRAIN LINE TO BE CAP AND LAWFULLY DISPOSED OF
	LIMITS OF ASPHALT CONCRETE IMPROVEMENTS PAVEMENT REMOVAL
	LIMITS OF CONCRETE REMOVAL
	LIMITS OF VEGETATION REMOVAL

DEMOLITION NOTES:

1. THE "LIMIT OF DEMOLITION" SHOWN IS APPROXIMATE AND IS GENERALLY CONSIDERED TO BE THE MINIMUM REMOVAL REQUIREMENTS. CONTRACTOR MUST COORDINATE AS NOTED IN THE LEGEND.
2. CONTRACTOR SHALL LEGALLY DISPOSE OF ALL DEMOLISHED MATERIALS OFF SITE.
3. CONTRACTOR SHALL PROTECT ALL EXISTING UTILITY IMPROVEMENTS NOT SPECIFICALLY DESIGNATED FOR REMOVAL.
4. THE ON-SITE UNDERGROUND UTILITIES SHOWN ON THIS SHEET ARE AT AN APPROXIMATE LOCATION. THE EXTENT, LOCATIONS AND SIZES ARE UNKNOWN. THE CONTRACTOR SHALL POTHOLE TO LOCATE AND VERIFY THE UNDERGROUND UTILITY LINES PRIOR TO REMOVAL.
5. CONTRACTOR TO PROTECT AND PRESERVE IN PLACE ANY FOUND SURVEY MONUMENTS. ANY MONUMENTS DISTURBED SHALL BE RESET BY A LICENSED SURVEYOR AND THE APPROPRIATE PAPERWORK FILED WITH THE CITY OR COUNTY.
6. ALL HAZARDOUS MATERIALS ENCOUNTERED DURING SITE DEMOLITION SHALL BE REMEDIATED AND DISPOSED OF PER STATE AND EPA REQUIREMENTS.
7. CONTRACTOR SHALL CONTACT AND COORDINATE WITH ALL UTILITY AGENCIES PRIOR TO THE START OF ANY DEMOLITION OR CONSTRUCTION.
8. ANY EXISTING UTILITIES AND/OR IMPROVEMENTS THAT BECOME DAMAGED DURING CONSTRUCTION SHALL BE COMPLETELY RESTORED TO THE SATISFACTION OF THE OWNER AND AGENCY HAVING AUTHORITY, AT THE CONTRACTOR'S SOLE EXPENSE.

UTILITY NOTE:

UTILITY INFORMATION SHOWN HEREON IS BASED ON RECORD INFORMATION SUPPLIED TO THE ENGINEER BY UTILITY COMPANIES, PUBLIC AGENCIES AND THE PROPERTY OWNER, TOGETHER WITH OBSERVATION OF VISIBLE EVIDENCE BY A FIELD SURVEY. THE ENGINEER CAN MAKE NO GUARANTEE AS TO THE ACCURACY OR COMPLETENESS OF THE UNDERGROUND UTILITY FACILITIES SHOWN. PRIOR TO ANY SITE EXCAVATIONS, THE CONTRACTOR SHALL CONTACT THE OWNER AND UNDERGROUND SERVICE ALERT (USA) AND REQUEST THAT THEY IDENTIFY THE LOCATION OF ALL UNDERGROUND UTILITIES AT THE SITE.

SURVEY NOTE:

THIS TOPOGRAPHIC SURVEY LOCATES SPECIFIC PHYSICAL FEATURES OF THE SITE AND THEIR ELEVATION AS DETERMINED NECESSARY BY THE PROJECT ENGINEER. IT IS NOT A COMPLETE TOPOGRAPHIC SURVEY OF THE SITE. THE INFORMATION SHOWN REFLECTS THE DATA OBTAINED BY FIELD SURVEY CONDUCTED ON APRIL 13, 2015.

BENCHMARK:

SET SPIKE IN TIN.

POINT #11 USED AS A TBM

ELEVATION = 4549.9038'

PLANS PREPARED BY:
Blair, Church & Flynn
CONSULTING ENGINEERS
451 Clovis Avenue, Suite 200
Clovis, California 93612
Tel (559) 326-1400
Fax (559) 326-1500

REGISTERED PROFESSIONAL ENGINEER PAIGE E. NOGA No. 78,395 CIVIL STATE OF CALIFORNIA

12/3/2021
Date Signed:

NO.	REVISIONS	DATE	SAP WO	SUPV	APPROVED	ENGR	CK'D	MADE	P.E.
1	ADDENDUM #1	03-19-2021				PN	PN	JR	PN
2	ENVIRONMENTAL HEALTH PLAN CHECK REVISIONS	06-18-2021				PN	PN	JR	PN
3	ADDENDUM #2	12-03-2021				PN	PN	JR	PN
4	ADDENDUM #3	02-18-2022				PN	PN	JR	PN

REFERENCE DRAWINGS	REFERENCE DRAWINGS	NO.	REVISIONS	DATE	SAP WO	SUPV	APPROVED	ENGR	CK'D	MADE	P.E.

LOCATION: BISHOP, CALIFORNIA

BISHOP SERVICE CENTER
SITE DEVELOPEMENT
TOPOGRAPHIC SURVEY AND DEMOLITION PLAN

VOLUME 1

SOUTHERN CALIFORNIA EDISON An EDISON INTERNATIONAL Company

SHEET NO. C0.7a

SCALE: AS NOTED

8 OF 66 SHTS.

100% CONSTRUCTION DOCUMENTS (12-03-2021)

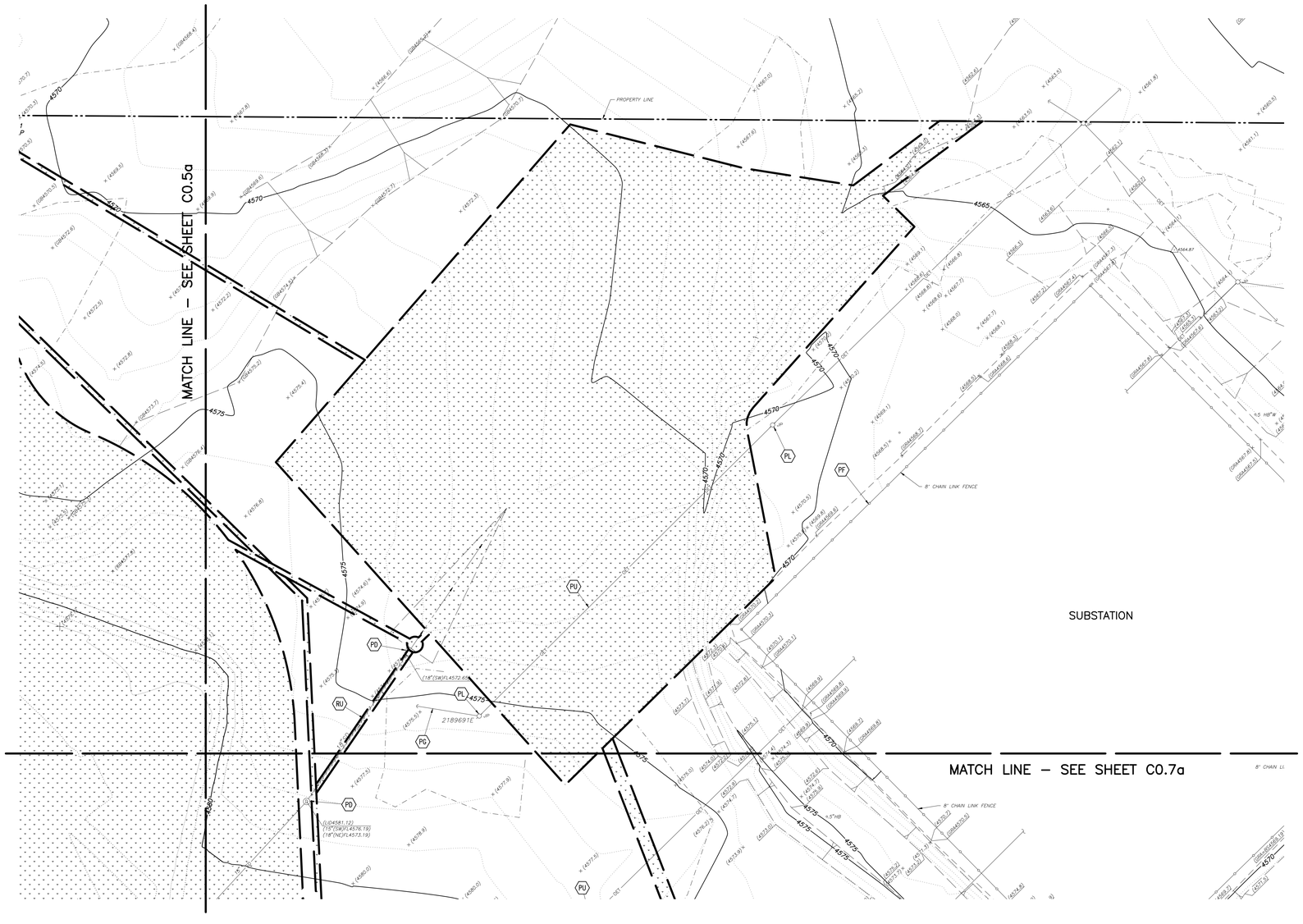

TOPOGRAPHIC LEGEND:

AC	ASPHALTIC CONCRETE
BS	BOTTOM SLOPE
C	CONCRETE
GB	GRADE BREAK
GR	GRATE
GRA	GRAVEL
L	LIP OF GUTTER
TOP	TOP OF POLE
(4580.5)	EXISTING GROUND ELEVATION
	BM=BENCHMARK; OR TBM=TEMPORARY BENCHMARK
12.55	SURVEY CONTROL POINT
GUY	GUY WIRE
JP	JOINT POLE
PP	POWER POLE
	SLOPE
.5"HB	HOSE BIBB; DIAMETER AS SHOWN
	CHAIN LINK FENCE
	DIRT
	EDGE OF ASPHALT CONCRETE PAVEMENT
	FLOWLINE AND DIRECTION
	GRADE BREAK
	GRAVEL
	ROCK
4560	MAJOR CONTOUR
	MINOR CONTOUR
C	COMMUNICATIONS LINE
OE	OVERHEAD ELECTRIC
OET	OVERHEAD ELECTRIC AND TELEPHONE
SD	STORM DRAIN LINE
	PROPERTY LINE
	RIGHT-OF-WAY
	ROADWAY CENTERLINE

0 5 10 20 40
SCALE IN FEET

DEMOLITION LEGEND:

PA	PROTECT EXISTING ASPHALT IMPROVEMENT TO REMAIN
PB	PROTECT EXISTING BOLLARD TO REMAIN
PC	PROTECT EXISTING CONCRETE IMPROVEMENTS TO REMAIN
PD	PROTECT EXISTING STORM DRAIN IMPROVEMENTS TO REMAIN
PF	PROTECT EXISTING FENCE TO REMAIN
PG	PROTECT EXISTING GUY WIRE TO REMAIN
PL	EXISTING UTILITY POLE, PROTECT IN PLACE
PM	PROTECT EXISTING MOWSTRIP TO REMAIN
PU	EXISTING UTILITY, PROTECT IN PLACE
RA	REMOVE AND LAWFULLY DISPOSE OF ASPHALT CONCRETE PAVEMENT
RC	REMOVE AND LAWFULLY DISPOSE OF CONCRETE IMPROVEMENTS
RF	REMOVE AND REINSTALL FENCE FABRIC TO CONSTRUCT CONCRETE MOW STRIP PER SITE PLAN
RR	REMOVE AND REINSTALL CHAIN LINK FOR INSTALLATION OF MOWSTRIP
RU	REMOVE UTILITY
SC	SAWCUT FULL DEPTH
SD	STORM DRAIN LINE TO BE CAP AND LAWFULLY DISPOSED OF
	LIMITS OF ASPHALT CONCRETE IMPROVEMENTS PAVEMENT REMOVAL
	LIMITS OF CONCRETE REMOVAL
	LIMITS OF VEGETATION REMOVAL

DEMOLITION NOTES:

1. THE "LIMIT OF DEMOLITION" SHOWN IS APPROXIMATE AND IS GENERALLY CONSIDERED TO BE THE MINIMUM REMOVAL REQUIREMENTS. CONTRACTOR MUST COORDINATE AS NOTED IN THE LEGEND.
2. CONTRACTOR SHALL LEGALLY DISPOSE OF ALL DEMOLISHED MATERIALS OFF SITE.
3. CONTRACTOR SHALL PROTECT ALL EXISTING UTILITY IMPROVEMENTS NOT SPECIFICALLY DESIGNATED FOR REMOVAL.
4. THE ON-SITE UNDERGROUND UTILITIES SHOWN ON THIS SHEET ARE AT AN APPROXIMATE LOCATION. THE EXTENT, LOCATIONS AND SIZES ARE UNKNOWN. THE CONTRACTOR SHALL POTHOLE TO LOCATE AND VERIFY THE UNDERGROUND UTILITY LINES PRIOR TO REMOVAL.
5. CONTRACTOR TO PROTECT AND PRESERVE IN PLACE ANY FOUND SURVEY MONUMENTS. ANY MONUMENTS DISTURBED SHALL BE RESET BY A LICENSED SURVEYOR AND THE APPROPRIATE PAPERWORK FILED WITH THE CITY OR COUNTY.
6. ALL HAZARDOUS MATERIALS ENCOUNTERED DURING SITE DEMOLITION SHALL BE REMEDIATED AND DISPOSED OF PER STATE AND EPA REQUIREMENTS.
7. CONTRACTOR SHALL CONTACT AND COORDINATE WITH ALL UTILITY AGENCIES PRIOR TO THE START OF ANY DEMOLITION OR CONSTRUCTION.
8. ANY EXISTING UTILITIES AND/OR IMPROVEMENTS THAT BECOME DAMAGED DURING CONSTRUCTION SHALL BE COMPLETELY RESTORED TO THE SATISFACTION OF THE OWNER AND AGENCY HAVING AUTHORITY, AT THE CONTRACTOR'S SOLE EXPENSE.

UTILITY NOTE:

UTILITY INFORMATION SHOWN HEREON IS BASED ON RECORD INFORMATION SUPPLIED TO THE ENGINEER BY UTILITY COMPANIES, PUBLIC AGENCIES AND THE PROPERTY OWNER, TOGETHER WITH OBSERVATION OF VISIBLE EVIDENCE BY A FIELD SURVEY. THE ENGINEER CAN MAKE NO GUARANTEE AS TO THE ACCURACY OR COMPLETENESS OF THE UNDERGROUND UTILITY FACILITIES SHOWN. PRIOR TO ANY SITE EXCAVATIONS, THE CONTRACTOR SHALL CONTACT THE OWNER AND UNDERGROUND SERVICE ALERT (USA) AND REQUEST THAT THEY IDENTIFY THE LOCATION OF ALL UNDERGROUND UTILITIES AT THE SITE.

SURVEY NOTE:

THIS TOPOGRAPHIC SURVEY LOCATES SPECIFIC PHYSICAL FEATURES OF THE SITE AND THEIR ELEVATION AS DETERMINED NECESSARY BY THE PROJECT ENGINEER. IT IS NOT A COMPLETE TOPOGRAPHIC SURVEY OF THE SITE. THE INFORMATION SHOWN REFLECTS THE DATA OBTAINED BY FIELD SURVEY CONDUCTED ON APRIL 13, 2015.

BENCHMARK:

SET SPIKE IN TIN.

POINT #11 USED AS A TBM

ELEVATION = 4549.9038'

REGISTERED PROFESSIONAL ENGINEER
PAIGE E. NOACK
No. 78,395
Civil
STATE OF CALIFORNIA
12/3/2021
Date Signed:

PLANS PREPARED BY:
Blair, Church & Flynn
CONSULTING ENGINEERS
4551 Clovis Avenue, Suite 200
Clovis, California 93612
Tel (559) 326-1400
Fax (559) 326-1500

NO.	REVISIONS	DATE	SAP WO	SUPV	APPROVED	ENGR	CK'D	MADE	P.E.
1	ADDENDUM #1	03-19-2021				PN	PN	JR	PN
2	ENVIRONMENTAL HEALTH PLAN CHECK REVISIONS	06-18-2021				PN	PN	JR	PN
3	ADDENDUM #2	12-03-2021				PN	PN	JR	PN
4	ADDENDUM #3	02-18-2022				PN	PN	JR	PN

REFERENCE DRAWINGS | REFERENCE DRAWINGS | NO. | REVISIONS | DATE | SAP WO | SUPV | APPROVED | ENGR | CK'D | MADE | P.E.

LOCATION: BISHOP, CALIFORNIA

BISHOP SERVICE CENTER
SITE DEVELOPEMENT
TOPOGRAPHIC SURVEY AND DEMOLITION PLAN
VOLUME 1

SOUTHERN CALIFORNIA EDISON An EDISON INTERNATIONAL Company

SHEET NO.
C0.8a
SCALE: AS NOTED
9 OF 66 SHTS.

100% CONSTRUCTION DOCUMENTS (12-03-2021)

Drawing: P:\2193-0301\Site\Production\Drawings\01 - Site\Topographic Survey & Demolition Plan.dwg; C0.8a Topographic Survey and Demolition Plan - BCF.ctb
Plot by: jrosales Feb 23, 2022 - 12:08am

SOUTHERN CALIFORNIA EDISON
2012 - 5 SIZE

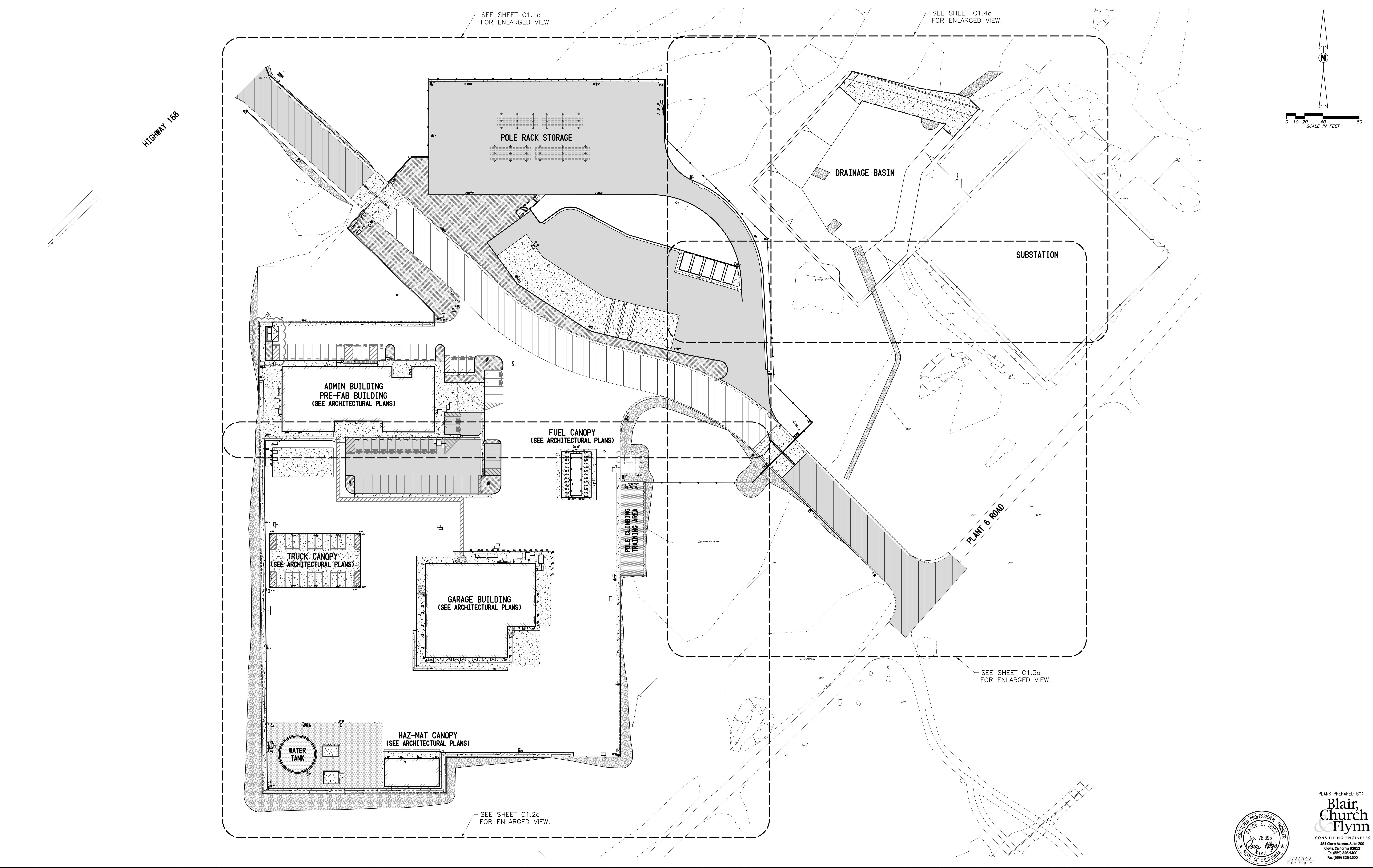

7	TRASH ENCLOSURE REVISIONS	07-20-2022				PN	PN	JR	PN
NO.	REVISIONS	DATE	SAP WO	SUPV	APPROVED	ENGR	CK'D	MADE	P.E.

NO.	REVISIONS	DATE	SAP WO	SUPV	APPROVED	ENGR	CK'D	MADE	P.E.
1	ADDENDUM #1	03-19-2021				PN	PN	JR	PN
2	ENVIRONMENTAL HEALTH PLAN CHECK REVISIONS	06-18-2021				PN	PN	JR	PN
3	ADDENDUM #2	12-03-2021				PN	PN	JR	PN
4	ADDENDUM #3	02-18-2022				PN	PN	JR	PN
5	FIRE DEPARTMENT INSPECTION REVISIONS	05-02-2022				PN	PN	JR	PN
6	STATE WATER BOARD REVISIONS	06-17-2022				PN	PN	JR	PN

REFERENCE DRAWINGS | REFERENCE DRAWINGS

REGISTERED PROFESSIONAL ENGINEER PAIGE E. NOGA No. 78,395 CIVIL STATE OF CALIFORNIA

5/2/2022
Date Signed:

PLANS PREPARED BY:
Blair, Church & Flynn
CONSULTING ENGINEERS
451 Clovis Avenue, Suite 200
Clovis, California 93612
Tel (559) 326-1400
Fax (559) 326-1500

LOCATION: BISHOP, CALIFORNIA

BISHOP SERVICE CENTER
SITE DEVELOPEMENT
OVERALL SITE PLAN

VOLUME 1

SOUTHERN CALIFORNIA EDISON An EDISON INTERNATIONAL Company

SHEET NO.
C1.0a
SCALE: AS NOTED
10 OF 66 SHTS.

100% CONSTRUCTION DOCUMENTS (06-17-2022)

SOUTHERN CALIFORNIA EDISON
2012 - S SIZE

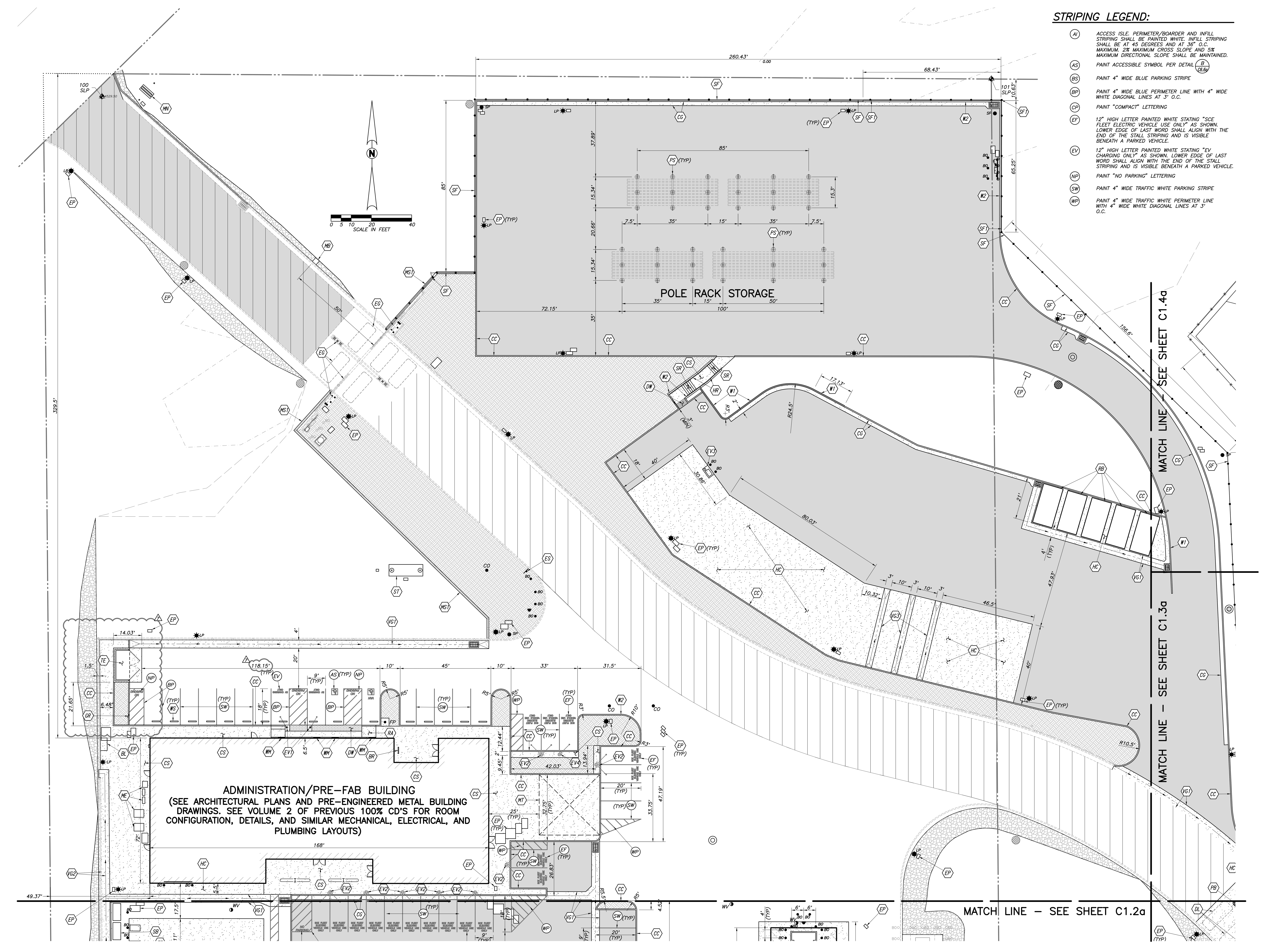

STRIPING LEGEND:

- AI — ACCESS ISLE. PERIMETER/BOARDER AND INFILL STRIPING SHALL BE PAINTED WHITE. INFILL STRIPING SHALL BE AT 45 DEGREES AND AT 36" O.C. MAXIMUM. 2% MAXIMUM CROSS SLOPE AND 5% MAXIMUM DIRECTIONAL SLOPE SHALL BE MAINTAINED.
- AS — PAINT ACCESSIBLE SYMBOL PER DETAIL B/C6.6a
- BS — PAINT 4" WIDE BLUE PARKING STRIPE
- BP — PAINT 4" WIDE BLUE PERIMETER LINE WITH 4" WIDE WHITE DIAGONAL LINES AT 3' O.C.
- CP — PAINT "COMPACT" LETTERING
- EF — 12" HIGH LETTER PAINTED WHITE STATING "SCE FLEET ELECTRIC VEHICLE USE ONLY" AS SHOWN. LOWER EDGE OF LAST WORD SHALL ALIGN WITH THE END OF THE STALL STRIPING AND IS VISIBLE BENEATH A PARKED VEHICLE.
- EV — 12" HIGH LETTER PAINTED WHITE STATING "EV CHARGING ONLY" AS SHOWN. LOWER EDGE OF LAST WORD SHALL ALIGN WITH THE END OF THE STALL STRIPING AND IS VISIBLE BENEATH A PARKED VEHICLE.
- NP — PAINT "NO PARKING" LETTERING
- SW — PAINT 4" WIDE TRAFFIC WHITE PARKING STRIPE
- WP — PAINT 4" WIDE TRAFFIC WHITE PERIMETER LINE WITH 4" WIDE WHITE DIAGONAL LINES AT 3' O.C.

CONSTRUCTION LEGEND:

- BB — BOLT DOWN BOLLARDS PER DETAIL C/C6.10a
- BL — TWO-BIKE LOCKERS ABSCO-302 BY GROUND CONTROL SYSTEMS PER CAL GREEN REQUIREMENTS. REINFORCED FIBERGLASS PLASTIC LOCKER, APPROXIMATELY 40"W x 75"L x 48"H, ANCHOR TO CONCRETE WITH MAXIMUM 3 DEGREES SLOPE PER REQUIREMENTS AND SPECIFICATION OF LOCKER MANUFACTURERS.
- BR — ORIGINAL RIBBON BIKE RACK, SURFACE MOUNT GALVANIZED, MODEL #RB 05 BIKE RACK (MAX OF 5 SPACES)
- CC — CONCRETE CURB PER DETAIL D/C6.0a
- CG — CONCRETE CURB AND GUTTER PER DETAIL C/C6.0a
- CH — 8' CHAIN LINK FENCE WITH DOUBLE GATE PER DETAIL A/C6.2a A/C6.3a
- CS — CONCRETE SIDEWALK PER DETAIL A/C6.0a
- DH — DOMESTIC WATER HOUSE BUILDING AND SLAB PER DETAIL C/C5.2a
- DL — DETECTOR LOOPS, (SEE ELECTRICAL PLANS)
- DW — DETECTABLE WARNINGS PER DETAIL N/C6.0a
- EG — EXISTING GATE, CARD READER, TRACK, DETECTOR LOOPS, CONCRETE, AND OTHER GATE EQUIPMENT TO REMAIN.
- EP — ELECTRICAL PULL BOXES, (SEE ELECTRICAL PLANS)
- EQ — ELECTRICAL EQUIPMENT, (SEE ELECTRICAL PLANS)
- ES — ENTRY ADA SIGN PER DETAIL D/C6.5a
- ET — WASTEWATER EVAPORATION TANK PER UTILITY PLAN
- EV1 — UNDERGROUND CONDUIT AND UNDERGROUND ROUGH-IN BOX TO BE INSTALLED BY GENERAL CONTRACTOR FOR FUTURE LEVEL-2 CLIPPERCREEK CS-40 EV CHARGER PER DETAIL D/C6.10a
- EV2 — UNDERGROUND CONDUIT AND UNDERGROUND ROUGH-IN BOX TO BE INSTALLED BY GENERAL CONTRACTOR FOR FUTURE LEVEL-2 EVSE 3703 EV CHARGER PER DETAIL E/C6.10a
- EV3 — UNDERGROUND CONDUIT AND UNDERGROUND ROUGH-IN BOX TO BE INSTALLED BY GENERAL CONTRACTOR FOR FUTURE LEVEL-3 ABB TERRA 185KW EV FAST CHARGER. SEE ELECTRICAL PLANS.
- EV4 — UNDERGROUND CONDUIT AND UNDERGROUND ROUGH-IN BOX TO BE INSTALLED BY GENERAL CONTRACTOR FOR FUTURE LEVEL-2 CLIPPERCREEK 80 AMP EV FAST CHARGER PER DETAIL F/C6.10a
- FP — PACKAGED FIRE BOOSTER PUMP BUILDING AND SLAB PER DETAIL A/C5.2a B/C5.2a
- GF — GUY WIRE TO BE SHORTENED AND REINSTALLED BY OTHERS
- GR — CONCRETE PAD PER DETAIL E/C6.5a FOR TEMPORARY MOBILE EMERGENCY GENERATOR THAT WILL TIE-IN TO MAIN DISTRIBUTION BOARD AND WILL SUPPORT ALL ELECTRICAL IMPROVEMENTS, (SEE ELECTRICAL PLANS)
- GT — GATE TRACK PER DETAIL F/C6.1a
- HC — HEAVY DUTY CONCRETE PER DETAIL B/C6.0a
- HR — HANDRAILS PER DETAIL E/C6.6a
- MB — LOCKING CURBSIDE MAILBOX PER DETAIL I/C6.5a
- ME — MECHANICAL EQUIPMENT AND CONCRETE PAD PER MECHANICAL & STRUCTURAL PLANS
- MN — MONUMENT SIGN WITH SCE LOGO PER DETAIL G/C6.5a
- MS1 — MOWSTRIP FOR SECURITY FENCE PER DETAIL H/C6.0a
- MS2 — MOWSTRIP PER DETAIL I/C6.0a
- MT — LOCATION FOR FUTURE MICROWAVE TOWER
- PB — PUSH BUTTON PEDESTAL PER DETAIL C/C6.1a
- PS — POLE STORAGE RACK PER DETAIL A/C6.5a
- R1 — AUTOMATIC GATE PER DETAIL A/C6.1a
- RA — ADA RAMP PER DETAIL A/C6.6a
- RB — ROLL-OFF BINS TO BE FURNISHED BY SCE AND INSTALLED BY GENERAL CONTRACTOR
- SB — SWITCHBOARD PAD PER DETAIL D/C6.6a. SWITCHBOARD TO HAVE A TRANSFER SWITCH AND HOOK-UP CONNECTION TO TIE-IN A TEMPORARY EMERGENCY GENERATOR. (SEE ELECTRICAL PLANS)
- SF — FURNISH AND INSTALL 8' SECURITY FENCE PER DETAIL J/C6.1a
- SF1 — FURNISH AND INSTALL 9.5' TALL SECURITY FENCE TO MEET SCE MINIMUM HEIGHT REQUIREMENT PER DETAIL J/C6.1a
- SH — SHOTCRETE IMPROVEMENTS PER GRADING AND DRAINAGE PLAN
- SP — SUMP PIT PER UTILITY PLAN
- SR — STAIR AND HANDRAIL PER DETAIL E/C6.6a
- ST — SEPTIC TANK PER UTILITY PLAN
- TE — TRASH ENCLOSURE PER DETAIL A/C6.8a
- VG1 — REINFORCED CONCRETE VALLEY GUTTER PER DETAIL F/C6.0a
- VG2 — CONCRETE VALLEY GUTTER PER DETAIL E/C6.0a
- VG3 — 3' REINFORCED CONCRETE VALLEY GUTTER PER DETAIL G/C6.0a
- W1 — RETAINING WALL AND GUARDRAIL PER DETAIL G/C6.6a
- W2 — RETAINING WALL WITH NO GUARDRAILS PER DETAIL G/C6.6a
- WM — WALL MOUNTED ADA PARKING SIGN PER DETAIL F/C6.6a
- WS — CONCRETE PRE-CAST WHEELSTOP PER DETAIL J/C6.0a
- WT — WATER TANK PER DETAIL A/C5.0a
- VR — VEEDER ROOT. MODEL TLS-350. SEE FUEL CANOPY PLANS FOR ADDITIONAL INFORMATION.
- BO — BOLLARD PER DETAIL K/C6.0a
- CO — CLEANOUT PER UTILITY PLAN
- OMPI DRAIN INLET PER GRADING AND DRAINAGE PLAN
- U-36 STORM DRAIN INLET PER GRADING AND DRAINAGE PLAN
- FIRE HYDRANT PER UTILITY PLAN
- FP — FLAG POLE PER DEATIL G/C6.7a
- SP — SECURITY POLE PER CORPORATE SECURITY
- LP — LIGHT POLE PER ELECTRICAL PLANS
- MANHOLE PER UTILITY PLAN
- LIMITS OF ASPHALT CONCRETE PAVEMENT IMPROVEMENTS PER DETAIL L/C6.0a
- LIMITS OF 2" ASPHALT OVERLAY AND SEAL COAT
- PROPOSED BUILDING IMPROVEMENTS. SEE ARCHITECTURAL PLANS
- LIMITS OF CONCRETE IMPROVEMENTS
- LIMITS OF RIP-RAP PER DETAIL F/C6.7a
- LIMITS OF CLASS 2 AGGREGATE BASE PER DETAIL H/C6.6a
- LIMITS OF MULCH IMPROVEMENTS. MULCH TO BE CHIPPED WALK-ON TYPE WOOD WITH A THICKNESS OF 4 INCHES
- LIMITS OF LANDSCAPING

PLANS PREPARED BY:
Blair, Church & Flynn
CONSULTING ENGINEERS
451 Clovis Avenue, Suite 200
Clovis, California 93612
Tel (559) 326-1400
Fax (559) 326-1500

REGISTERED PROFESSIONAL ENGINEER PAIGE E. NOGA No. 78,395 CIVIL STATE OF CALIFORNIA
5/2/2022
Date Signed:

REFERENCE DRAWINGS	REFERENCE DRAWINGS	NO.	REVISIONS	DATE	SAP WO	SUPV	APPROVED	ENGR	CK'D	MADE	P.E.
		7	TRASH ENCLOSURE REVISIONS	07-20-2022				PN	PN	JR	PN

NO.	REVISIONS	DATE	SAP WO	SUPV	APPROVED	ENGR	CK'D	MADE	P.E.
1	ADDENDUM #1	03-19-2021				PN	PN	JR	PN
2	ENVIRONMENTAL HEALTH PLAN CHECK REVISIONS	06-18-2021				PN	PN	JR	PN
3	ADDENDUM #2	12-03-2021				PN	PN	JR	PN
4	ADDENDUM #3	02-18-2022				PN	PN	JR	PN
5	FIRE DEPARTMENT INSPECTION REVISIONS	05-02-2022				PN	PN	JR	PN
6	STATE WATER BOARD REVISIONS	06-17-2022				PN	PN	JR	PN

LOCATION: BISHOP, CALIFORNIA

BISHOP SERVICE CENTER
SITE DEVELOPEMENT
SITE PLAN

VOLUME 1

SOUTHERN CALIFORNIA EDISON An EDISON INTERNATIONAL Company

SHEET NO. C1.1a
SCALE: AS NOTED
11 OF 66 SHTS.

100% CONSTRUCTION DOCUMENTS (06-17-2022)

Drawings: P:\219-0301\Site\ProductionDrawings\01 - Site\21930Is101.dwg: Site Plan (1) - BCF.ctb
Plot by: jredeifs Jul 20, 2022 - 3:22pm
SOUTHERN CALIFORNIA EDISON
2012 - 5 SIZE

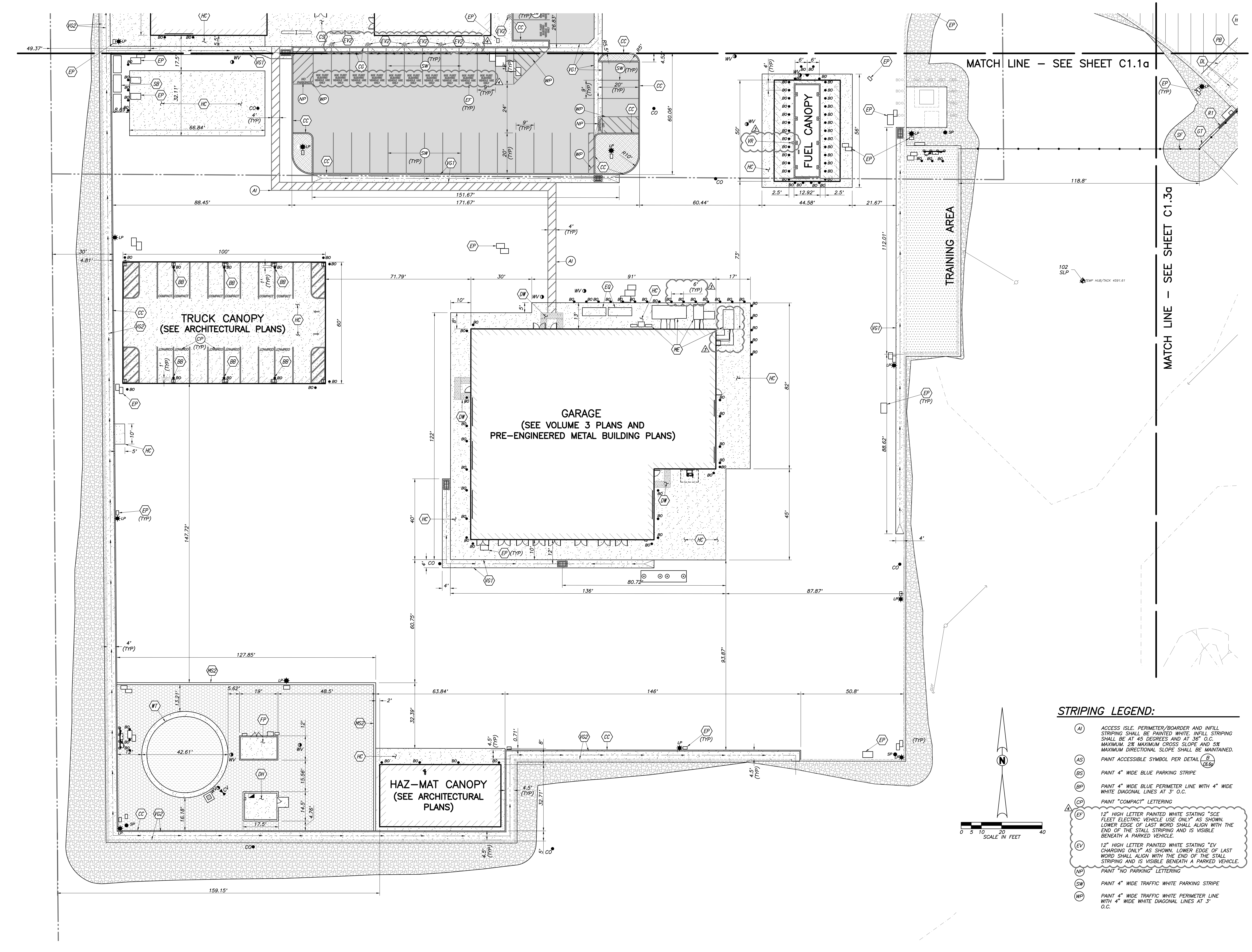

STRIPING LEGEND:

- (AI) ACCESS ISLE. PERIMETER/BOARDER AND INFILL STRIPING SHALL BE PAINTED WHITE. INFILL STRIPING SHALL BE AT 45 DEGREES AND AT 36" O.C. MAXIMUM. 2% MAXIMUM CROSS SLOPE AND 5% MAXIMUM DIRECTIONAL SLOPE SHALL BE MAINTAINED.
- (AS) PAINT ACCESSIBLE SYMBOL PER DETAIL B/C6.6a
- (BS) PAINT 4" WIDE BLUE PARKING STRIPE
- (BP) PAINT 4" WIDE BLUE PERIMETER LINE WITH 4" WIDE WHITE DIAGONAL LINES AT 3' O.C.
- (CP) PAINT "COMPACT" LETTERING
- △4 (EF) 12" HIGH LETTER PAINTED WHITE STATING "SCE FLEET ELECTRIC VEHICLE USE ONLY" AS SHOWN. LOWER EDGE OF LAST WORD SHALL ALIGN WITH THE END OF THE STALL STRIPING AND IS VISIBLE BENEATH A PARKED VEHICLE.
- (EV) 12" HIGH LETTER PAINTED WHITE STATING "EV CHARGING ONLY" AS SHOWN. LOWER EDGE OF LAST WORD SHALL ALIGN WITH THE END OF THE STALL STRIPING AND IS VISIBLE BENEATH A PARKED VEHICLE.
- (NP) PAINT "NO PARKING" LETTERING
- (SW) PAINT 4" WIDE TRAFFIC WHITE PARKING STRIPE
- (WP) PAINT 4" WIDE TRAFFIC WHITE PERIMETER LINE WITH 4" WIDE WHITE DIAGONAL LINES AT 3' O.C.

CONSTRUCTION LEGEND:

- BB — BOLT DOWN BOLLARDS PER DETAIL C/C6.10a
- BL — TWO-BIKE LOCKERS ABSCO-302 BY GROUND CONTROL SYSTEMS PER CAL GREEN REQUIREMENTS. REINFORCED FIBERGLASS PLASTIC LOCKER, APPROXIMATELY 40"W x 75"L x 48"H, ANCHOR TO CONCRETE WITH MAXIMUM 3 DEGREES SLOPE PER REQUIREMENTS AND SPECIFICATION OF LOCKER MANUFACTURERS.
- BR — ORIGINAL RIBBON BIKE RACK, SURFACE MOUNT GALVANIZED, MODEL #RB 05 BIKE RACK (MAX OF 5 SPACES)
- CC — CONCRETE CURB PER DETAIL D/C6.0a
- CG — CONCRETE CURB AND GUTTER PER DETAIL C/C6.0a
- CH — 8' CHAIN LINK FENCE WITH DOUBLE GATE PER DETAIL A/C6.2a A/C6.3a
- CS — CONCRETE SIDEWALK PER DETAIL A/C6.0a
- DH — DOMESTIC WATER HOUSE BUILDING AND SLAB PER DETAIL C/C5.2a
- DL — DETECTOR LOOPS, (SEE ELECTRICAL PLANS)
- DW — DETECTABLE WARNINGS PER DETAIL N/C6.0a
- EG — EXISTING GATE, CARD READER, TRACK, DETECTOR LOOPS, CONCRETE, AND OTHER GATE EQUIPMENT TO REMAIN.
- EP — ELECTRICAL PULL BOXES, (SEE ELECTRICAL PLANS)
- EQ — ELECTRICAL EQUIPMENT, (SEE ELECTRICAL PLANS)
- ES — ENTRY ADA SIGN PER DETAIL D/C6.5a
- ET — WASTEWATER EVAPORATION TANK PER UTILITY PLAN
- △4 EV1 — UNDERGROUND CONDUIT AND UNDERGROUND ROUGH-IN BOX TO BE INSTALLED BY GENERAL CONTRACTOR FOR FUTURE LEVEL-2 CLIPPERCREEK CS-40 EV CHARGER PER DETAIL D/C6.10a
- EV2 — UNDERGROUND CONDUIT AND UNDERGROUND ROUGH-IN BOX TO BE INSTALLED BY GENERAL CONTRACTOR FOR FUTURE LEVEL-2 EVSE 3703 EV CHARGER PER DETAIL E/C6.10a
- EV3 — UNDERGROUND CONDUIT AND UNDERGROUND ROUGH-IN BOX TO BE INSTALLED BY GENERAL CONTRACTOR FOR FUTURE LEVEL-3 ABB TERRA 185KW EV FAST CHARGER. SEE ELECTRICAL PLANS.
- EV4 — UNDERGROUND CONDUIT AND UNDERGROUND ROUGH-IN BOX TO BE INSTALLED BY GENERAL CONTRACTOR FOR FUTURE LEVEL-2 CLIPPERCREEK 80 AMP EV FAST CHARGER PER DETAIL F/C6.10a
- FP — PACKAGED FIRE BOOSTER PUMP BUILDING AND SLAB PER DETAIL A/C5.2a B/C5.2a
- GF — GUY WIRE TO BE SHORTENED AND REINSTALLED BY OTHERS
- GR — CONCRETE PAD PER DETAIL E/C6.5a FOR TEMPORARY MOBILE EMERGENCY GENERATOR THAT WILL TIE-IN TO MAIN DISTRIBUTION BOARD AND WILL SUPPORT ALL ELECTRICAL IMPROVEMENTS, (SEE ELECTRICAL PLANS)
- GT — GATE TRACK PER DETAIL F/C6.1a
- HC — HEAVY DUTY CONCRETE PER DETAIL B/C6.0a
- HR — HANDRAILS PER DETAIL E/C6.6a
- MB — LOCKING CURBSIDE MAILBOX PER DETAIL I/C6.5a
- ME — MECHANICAL EQUIPMENT AND CONCRETE PAD PER MECHANICAL & STRUCTURAL PLANS
- MN — MONUMENT SIGN WITH SCE LOGO PER DETAIL G/C6.5a
- MS1 — MOWSTRIP FOR SECURITY FENCE PER DETAIL H/C6.0a
- MS2 — MOWSTRIP PER DETAIL I/C6.0a
- MT — LOCATION FOR FUTURE MICROWAVE TOWER
- PB — PUSH BUTTON PEDESTAL PER DETAIL C/C6.1a
- PS — POLE STORAGE RACK PER DETAIL A/C6.5a
- R1 — AUTOMATIC GATE PER DETAIL A/C6.1a
- RA — ADA RAMP PER DETAIL A/C6.6a
- RB — ROLL-OFF BINS TO BE FURNISHED BY SCE AND INSTALLED BY GENERAL CONTRACTOR
- SB — SWITCHBOARD PAD PER DETAIL D/C6.6a. SWITCHBOARD TO HAVE A TRANSFER SWITCH AND HOOK-UP CONNECTION TO TIE-IN A TEMPORARY EMERGENCY GENERATOR. (SEE ELECTRICAL PLANS)
- SF — FURNISH AND INSTALL 8' SECURITY FENCE PER DETAIL J/C6.1a
- SF1 — FURNISH AND INSTALL 9.5' TALL SECURITY FENCE TO MEET SCE MINIMUM HEIGHT REQUIREMENT PER DETAIL J/C6.1a
- SH — SHOTCRETE IMPROVEMENTS PER GRADING AND DRAINAGE PLAN
- SP — SUMP PIT PER UTILITY PLAN
- SR — STAIR AND HANDRAIL PER DETAIL E/C6.6a
- ST — SEPTIC TANK PER UTILITY PLAN
- TE — TRASH ENCLOSURE PER DETAIL A/C6.8a
- VG1 — REINFORCED CONCRETE VALLEY GUTTER PER DETAIL F/C6.0a
- VG2 — CONCRETE VALLEY GUTTER PER DETAIL E/C6.0a
- VG3 — 3' REINFORCED CONCRETE VALLEY GUTTER PER DETAIL G/C6.0a
- W1 — RETAINING WALL AND GUARDRAIL PER DETAIL G/C6.6a
- W2 — RETAINING WALL WITH NO GUARDRAILS PER DETAIL G/C6.6a
- WM — WALL MOUNTED ADA PARKING SIGN PER DETAIL F/C6.6a
- WS — CONCRETE PRE-CAST WHEELSTOP PER DETAIL J/C6.0a
- WT — WATER TANK PER DETAIL A/C5.0a
- △3 VR — VEEDER ROOT. MODEL TLS-350. SEE FUEL CANOPY PLANS FOR ADDITIONAL INFORMATION.
- •BO — BOLLARD PER DETAIL K/C6.0a
- •CO — CLEANOUT PER UTILITY PLAN
- OMPI DRAIN INLET PER GRADING AND DRAINAGE PLAN
- U-36 STORM DRAIN INLET PER GRADING AND DRAINAGE PLAN
- FIRE HYDRANT PER UTILITY PLAN
- •FP — FLAG POLE PER DEATIL G/C6.7a
- •SP — SECURITY POLE PER CORPORATE SECURITY
- LP — LIGHT POLE PER ELECTRICAL PLANS
- MANHOLE PER UTILITY PLAN
- LIMITS OF ASPHALT CONCRETE PAVEMENT IMPROVEMENTS PER DETAIL L/C6.0a
- LIMITS OF 2" ASPHALT OVERLAY AND SEAL COAT
- PROPOSED BUILDING IMPROVEMENTS. SEE ARCHITECTURAL PLANS
- LIMITS OF CONCRETE IMPROVEMENTS
- LIMITS OF RIP-RAP PER DETAIL F/C6.7a
- LIMITS OF CLASS 2 AGGREGATE BASE PER DETAIL H/C6.6a
- LIMITS OF MULCH IMPROVEMENTS. MULCH TO BE CHIPPED WALK-ON TYPE WOOD WITH A THICKNESS OF 4 INCHES
- LIMITS OF LANDSCAPING

REGISTERED PROFESSIONAL ENGINEER — PAIGE E. NOGA — No. 78,395 — CIVIL — STATE OF CALIFORNIA

12/3/2021
Date Signed:

PLANS PREPARED BY:
Blair, Church & Flynn
CONSULTING ENGINEERS
451 Clovis Avenue, Suite 200
Clovis, California 93612
Tel (559) 326-1400
Fax (559) 326-1500

NO.	REVISIONS	DATE	SAP WO	SUPV	APPROVED	ENGR	CK'D	MADE	P.E.
1	ADDENDUM #1	03-19-2021				PN	PN	JR	PN
2	ENVIRONMENTAL HEALTH PLAN CHECK REVISIONS	06-18-2021				PN	PN	JR	PN
3	ADDENDUM #2	12-03-2021				PN	PN	JR	PN
4	ADDENDUM #3	02-18-2022				PN	PN	JR	PN

REFERENCE DRAWINGS | REFERENCE DRAWINGS

LOCATION: BISHOP, CALIFORNIA

BISHOP SERVICE CENTER
SITE DEVELOPEMENT
SITE PLAN

VOLUME 1

SOUTHERN CALIFORNIA EDISON — An EDISON INTERNATIONAL Company

SHEET NO. C1.2a
SCALE: AS NOTED
12 OF 66 SHTS.

100% CONSTRUCTION DOCUMENTS (12-03-2021)

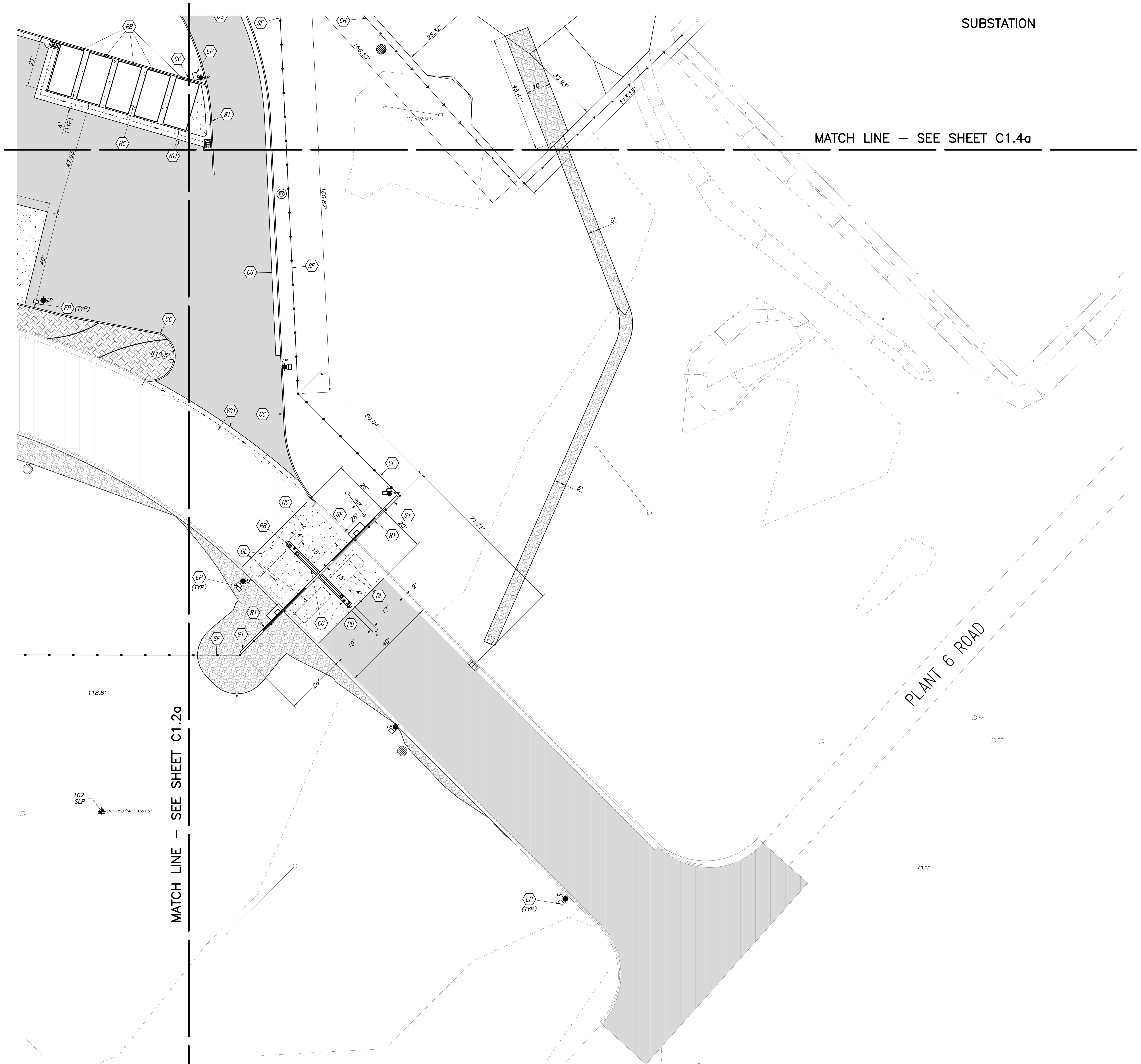

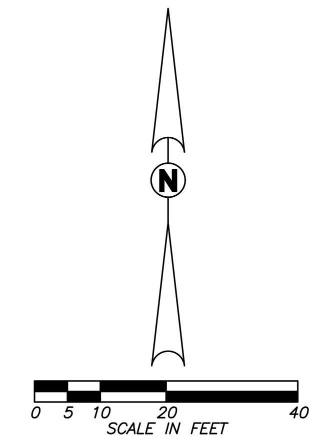

STRIPING LEGEND:

- (AI) ACCESS ISLE. PERIMETER/BOARDER AND INFILL STRIPING SHALL BE PAINTED WHITE. INFILL STRIPING SHALL BE AT 45 DEGREES AND AT 36" O.C. MAXIMUM. 2% MAXIMUM CROSS SLOPE AND 5% MAXIMUM DIRECTIONAL SLOPE SHALL BE MAINTAINED.
- (AS) PAINT ACCESSIBLE SYMBOL PER DETAIL B/C6.6a
- (BS) PAINT 4" WIDE BLUE PARKING STRIPE
- (BP) PAINT 4" WIDE BLUE PERIMETER LINE WITH 4" WIDE WHITE DIAGONAL LINES AT 3' O.C.
- (CP) PAINT "COMPACT" LETTERING
- (EF) 12" HIGH LETTER PAINTED WHITE STATING "SCE FLEET ELECTRIC VEHICLE USE ONLY" AS SHOWN. LOWER EDGE OF LAST WORD SHALL ALIGN WITH THE END OF THE STALL STRIPING AND IS VISIBLE BENEATH A PARKED VEHICLE. (4)
- (EV) 12" HIGH LETTER PAINTED WHITE STATING "EV CHARGING ONLY" AS SHOWN. LOWER EDGE OF LAST WORD SHALL ALIGN WITH THE END OF THE STALL STRIPING AND IS VISIBLE BENEATH A PARKED VEHICLE.
- (NP) PAINT "NO PARKING" LETTERING
- (SW) PAINT 4" WIDE TRAFFIC WHITE PARKING STRIPE
- (WP) PAINT 4" WIDE TRAFFIC WHITE PERIMETER LINE WITH 4" WIDE WHITE DIAGONAL LINES AT 3' O.C.

CONSTRUCTION LEGEND:

- BB — BOLT DOWN BOLLARDS PER DETAIL C/C6.10a
- BL — TWO-BIKE LOCKERS ABSCO-302 BY GROUND CONTROL SYSTEMS PER CAL GREEN REQUIREMENTS. REINFORCED FIBERGLASS PLASTIC LOCKER, APPROXIMATELY 40"W x 75"L x 48"H, ANCHOR TO CONCRETE WITH MAXIMUM 3 DEGREES SLOPE PER REQUIREMENTS AND SPECIFICATION OF LOCKER MANUFACTURERS.
- BR — ORIGINAL RIBBON BIKE RACK, SURFACE MOUNT GALVANIZED, MODEL #RB 05 BIKE RACK (MAX OF 5 SPACES)
- CC — CONCRETE CURB PER DETAIL D/C6.0a
- CG — CONCRETE CURB AND GUTTER PER DETAIL C/C6.0a
- CH — 8' CHAIN LINK FENCE WITH DOUBLE GATE PER DETAIL A/C6.2a A/C6.3a
- CS — CONCRETE SIDEWALK PER DETAIL A/C6.0a
- DH — DOMESTIC WATER HOUSE BUILDING AND SLAB PER DETAIL C/C5.2a
- DL — DETECTOR LOOPS, (SEE ELECTRICAL PLANS)
- DW — DETECTABLE WARNINGS PER DETAIL N/C6.0a
- EG — EXISTING GATE, CARD READER, TRACK, DETECTOR LOOPS, CONCRETE, AND OTHER GATE EQUIPMENT TO REMAIN.
- EP — ELECTRICAL PULL BOXES, (SEE ELECTRICAL PLANS)
- EQ — ELECTRICAL EQUIPMENT, (SEE ELECTRICAL PLANS)
- ES — ENTRY ADA SIGN PER DETAIL D/C6.5a
- ET — WASTEWATER EVAPORATION TANK PER UTILITY PLAN
- EV1 — UNDERGROUND CONDUIT AND UNDERGROUND ROUGH-IN BOX TO BE INSTALLED BY GENERAL CONTRACTOR FOR FUTURE LEVEL-2 CLIPPERCREEK CS-40 EV CHARGER PER DETAIL D/C6.10a (4)
- EV2 — UNDERGROUND CONDUIT AND UNDERGROUND ROUGH-IN BOX TO BE INSTALLED BY GENERAL CONTRACTOR FOR FUTURE LEVEL-2 EVSE 3703 EV CHARGER PER DETAIL E/C6.10a
- EV3 — UNDERGROUND CONDUIT AND UNDERGROUND ROUGH-IN BOX TO BE INSTALLED BY GENERAL CONTRACTOR FOR FUTURE LEVEL-3 ABB TERRA 185KW EV FAST CHARGER. SEE ELECTRICAL PLANS.
- EV4 — UNDERGROUND CONDUIT AND UNDERGROUND ROUGH-IN BOX TO BE INSTALLED BY GENERAL CONTRACTOR FOR FUTURE LEVEL-2 CLIPPERCREEK 80 AMP EV FAST CHARGER PER DETAIL F/C6.10a
- FP — PACKAGED FIRE BOOSTER PUMP BUILDING AND SLAB PER DETAIL A/C5.2a B/C5.2a
- GF — GUY WIRE TO BE SHORTENED AND REINSTALLED BY OTHERS
- GR — CONCRETE PAD PER DETAIL E/C6.5a FOR TEMPORARY MOBILE EMERGENCY GENERATOR THAT WILL TIE-IN TO MAIN DISTRIBUTION BOARD AND WILL SUPPORT ALL ELECTRICAL IMPROVEMENTS, (SEE ELECTRICAL PLANS)
- GT — GATE TRACK PER DETAIL F/C6.1a
- HC — HEAVY DUTY CONCRETE PER DETAIL B/C6.0a
- HR — HANDRAILS PER DETAIL E/C6.6a
- MB — LOCKING CURBSIDE MAILBOX PER DETAIL I/C6.5a
- ME — MECHANICAL EQUIPMENT AND CONCRETE PAD PER MECHANICAL & STRUCTURAL PLANS
- MN — MONUMENT SIGN WITH SCE LOGO PER DETAIL G/C6.5a
- MS1 — MOWSTRIP FOR SECURITY FENCE PER DETAIL H/C6.0a
- MS2 — MOWSTRIP PER DETAIL I/C6.0a
- MT — LOCATION FOR FUTURE MICROWAVE TOWER
- PB — PUSH BUTTON PEDESTAL PER DETAIL C/C6.1a
- PS — POLE STORAGE RACK PER DETAIL A/C6.5a
- R1 — AUTOMATIC GATE PER DETAIL A/C6.1a
- RA — ADA RAMP PER DETAIL A/C6.6a
- RB — ROLL-OFF BINS TO BE FURNISHED BY SCE AND INSTALLED BY GENERAL CONTRACTOR
- SB — SWITCHBOARD PAD PER DETAIL D/C6.6a. SWITCHBOARD TO HAVE A TRANSFER SWITCH AND HOOK-UP CONNECTION TO TIE-IN A TEMPORARY EMERGENCY GENERATOR. (SEE ELECTRICAL PLANS)
- SF — FURNISH AND INSTALL 8' SECURITY FENCE PER DETAIL J/C6.1a
- SF1 — FURNISH AND INSTALL 9.5' TALL SECURITY FENCE TO MEET SCE MINIMUM HEIGHT REQUIREMENT PER DETAIL J/C6.1a
- SH — SHOTCRETE IMPROVEMENTS PER GRADING AND DRAINAGE PLAN
- SP — SUMP PIT PER UTILITY PLAN
- SR — STAIR AND HANDRAIL PER DETAIL E/C6.6a
- ST — SEPTIC TANK PER UTILITY PLAN
- TE — TRASH ENCLOSURE PER DETAIL A/C6.8a
- VG1 — REINFORCED CONCRETE VALLEY GUTTER PER DETAIL F/C6.0a
- VG2 — CONCRETE VALLEY GUTTER PER DETAIL E/C6.0a
- VG3 — 3' REINFORCED CONCRETE VALLEY GUTTER PER DETAIL G/C6.0a
- W1 — RETAINING WALL AND GUARDRAIL PER DETAIL G/C6.6a
- W2 — RETAINING WALL WITH NO GUARDRAILS PER DETAIL G/C6.6a
- WM — WALL MOUNTED ADA PARKING SIGN PER DETAIL F/C6.6a
- WS — CONCRETE PRE-CAST WHEELSTOP PER DETAIL J/C6.0a
- WT — WATER TANK PER DETAIL A/C5.0a
- VR — VEEDER ROOT. MODEL TLS-350. SEE FUEL CANOPY PLANS FOR ADDITIONAL INFORMATION. (3)
- BO — BOLLARD PER DETAIL K/C6.0a
- CO — CLEANOUT PER UTILITY PLAN
- OMPI DRAIN INLET PER GRADING AND DRAINAGE PLAN
- U-36 STORM DRAIN INLET PER GRADING AND DRAINAGE PLAN
- FIRE HYDRANT PER UTILITY PLAN
- FP — FLAG POLE PER DEATIL G/C6.7a
- SP — SECURITY POLE PER CORPORATE SECURITY
- LP — LIGHT POLE PER ELECTRICAL PLANS
- MANHOLE PER UTILITY PLAN
- LIMITS OF ASPHALT CONCRETE PAVEMENT IMPROVEMENTS PER DETAIL L/C6.0a
- LIMITS OF 2" ASPHALT OVERLAY AND SEAL COAT
- PROPOSED BUILDING IMPROVEMENTS. SEE ARCHITECTURAL PLANS
- LIMITS OF CONCRETE IMPROVEMENTS
- LIMITS OF RIP-RAP PER DETAIL F/C6.7a
- LIMITS OF CLASS 2 AGGREGATE BASE PER DETAIL H/C6.6a
- LIMITS OF MULCH IMPROVEMENTS. MULCH TO BE CHIPPED WALK-ON TYPE WOOD WITH A THICKNESS OF 4 INCHES
- LIMITS OF LANDSCAPING

REGISTERED PROFESSIONAL ENGINEER — PAIGE E. NOGA — No. 78,395 — CIVIL — STATE OF CALIFORNIA
12/3/2021
Date Signed:

PLANS PREPARED BY:
Blair, Church & Flynn
CONSULTING ENGINEERS
451 Clovis Avenue, Suite 200
Clovis, California 93612
Tel (559) 326-1400
Fax (559) 326-1500

NO.	REVISIONS	DATE	SAP WO	SUPV	APPROVED	ENGR	CK'D	MADE	P.E.
1	ADDENDUM #1	03-19-2021				PN	PN	JR	PN
2	ENVIRONMENTAL HEALTH PLAN CHECK REVISIONS	06-18-2021				PN	PN	JR	PN
3	ADDENDUM #2	12-03-2021				PN	PN	JR	PN
4	ADDENDUM #3	02-18-2022				PN	PN	JR	PN

REFERENCE DRAWINGS	REFERENCE DRAWINGS	NO.	REVISIONS	DATE	SAP WO	SUPV	APPROVED	ENGR	CK'D	MADE	P.E.

LOCATION: BISHOP, CALIFORNIA

BISHOP SERVICE CENTER
SITE DEVELOPEMENT
SITE PLAN

VOLUME 1

SOUTHERN CALIFORNIA EDISON — An EDISON INTERNATIONAL Company

SHEET NO. C1.3a
SCALE: AS NOTED
13 OF 66 SHTS.

100% CONSTRUCTION DOCUMENTS (12-03-2021)

Drawing: P:\219-0301\Site\productiondrawings\01 - Site\219301si01.dwg; Site Plan (3) - BCF.ctb
Plot by: jredelfs Feb 23, 2022 - 7:29am
SOUTHERN CALIFORNIA EDISON
2012 - 5 SIZE

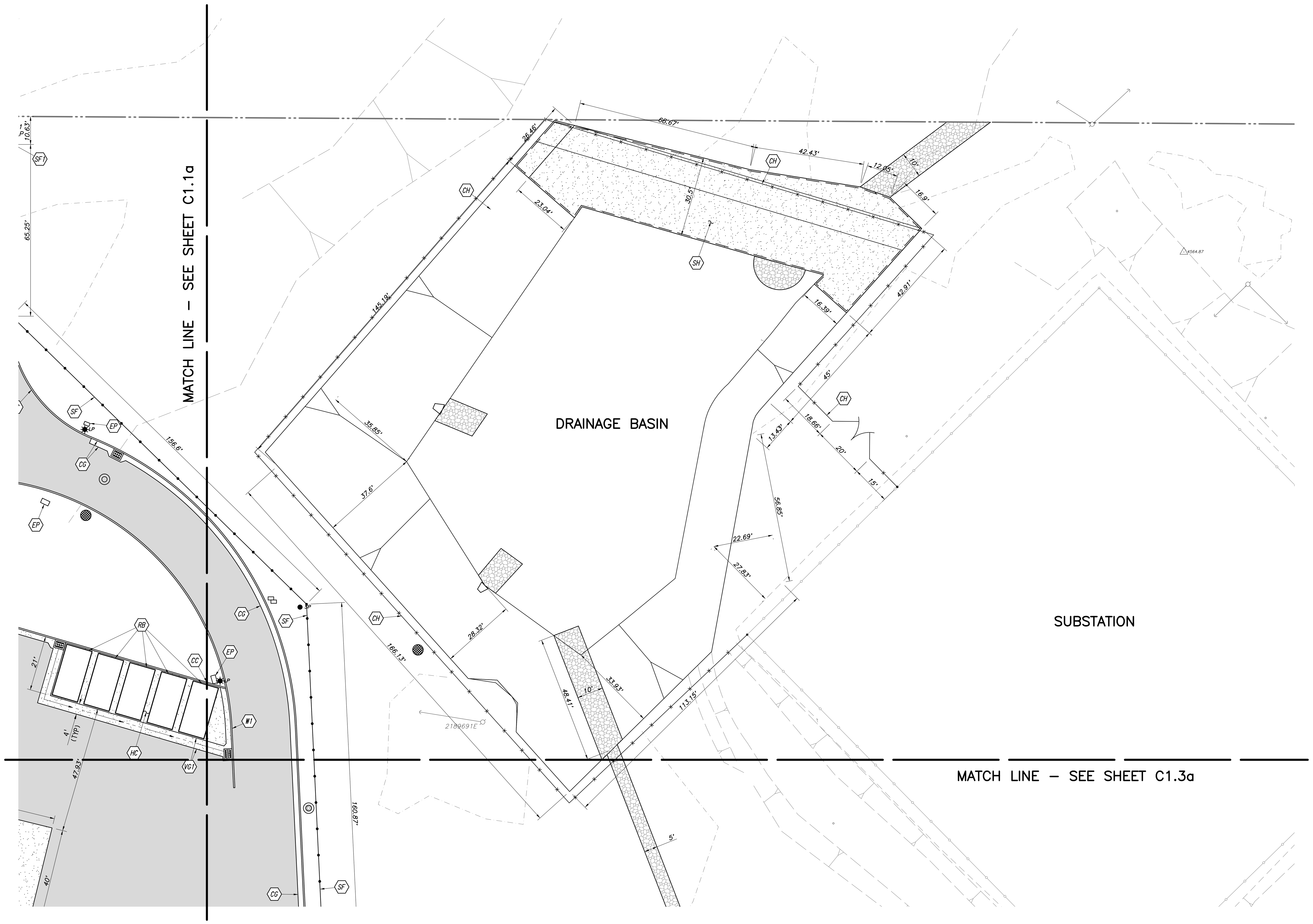

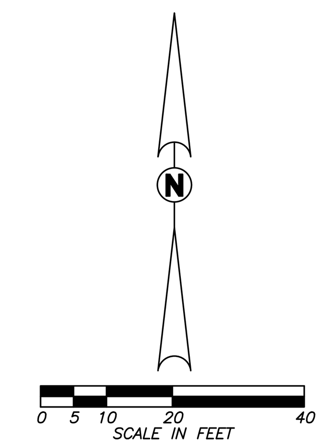

STRIPING LEGEND:

- (AI) ACCESS ISLE. PERIMETER/BOARDER AND INFILL STRIPING SHALL BE PAINTED WHITE. INFILL STRIPING SHALL BE AT 45 DEGREES AND AT 36" O.C. MAXIMUM. 2% MAXIMUM CROSS SLOPE AND 5% MAXIMUM DIRECTIONAL SLOPE SHALL BE MAINTAINED.
- (AS) PAINT ACCESSIBLE SYMBOL PER DETAIL B/C6.6a
- (BS) PAINT 4" WIDE BLUE PARKING STRIPE
- (BP) PAINT 4" WIDE BLUE PERIMETER LINE WITH 4" WIDE WHITE DIAGONAL LINES AT 3' O.C.
- (CP) PAINT "COMPACT" LETTERING
- 4 (EF) 12" HIGH LETTER PAINTED WHITE STATING "SCE FLEET ELECTRIC VEHICLE USE ONLY" AS SHOWN. LOWER EDGE OF LAST WORD SHALL ALIGN WITH THE END OF THE STALL STRIPING AND IS VISIBLE BENEATH A PARKED VEHICLE.
- (EV) 12" HIGH LETTER PAINTED WHITE STATING "EV CHARGING ONLY" AS SHOWN. LOWER EDGE OF LAST WORD SHALL ALIGN WITH THE END OF THE STALL STRIPING AND IS VISIBLE BENEATH A PARKED VEHICLE.
- (NP) PAINT "NO PARKING" LETTERING
- (SW) PAINT 4" WIDE TRAFFIC WHITE PARKING STRIPE
- (WP) PAINT 4" WIDE TRAFFIC WHITE PERIMETER LINE WITH 4" WIDE WHITE DIAGONAL LINES AT 3' O.C.

CONSTRUCTION LEGEND:

- (BB) BOLT DOWN BOLLARDS PER DETAIL C/C6.10a
- (BL) TWO-BIKE LOCKERS ABSCO-302 BY GROUND CONTROL SYSTEMS PER CAL GREEN REQUIREMENTS. REINFORCED FIBERGLASS PLASTIC LOCKER, APPROXIMATELY 40"W x 75"L x 48"H, ANCHOR TO CONCRETE WITH MAXIMUM 3 DEGREES SLOPE PER REQUIREMENTS AND SPECIFICATION OF LOCKER MANUFACTURERS.
- (BR) ORIGINAL RIBBON BIKE RACK, SURFACE MOUNT GALVANIZED, MODEL #RB 05 BIKE RACK (MAX OF 5 SPACES)
- (CC) CONCRETE CURB PER DETAIL D/C6.0a
- (CG) CONCRETE CURB AND GUTTER PER DETAIL C/C6.0a
- (CH) 8' CHAIN LINK FENCE WITH DOUBLE GATE PER DETAIL A/C6.2a A/C6.3a
- (CS) CONCRETE SIDEWALK PER DETAIL A/C6.0a
- (DH) DOMESTIC WATER HOUSE BUILDING AND SLAB PER DETAIL C/C5.2a
- (DL) DETECTOR LOOPS, (SEE ELECTRICAL PLANS)
- (DW) DETECTABLE WARNINGS PER DETAIL N/C6.0a
- (EG) EXISTING GATE, CARD READER, TRACK, DETECTOR LOOPS, CONCRETE, AND OTHER GATE EQUIPMENT TO REMAIN.
- (EP) ELECTRICAL PULL BOXES, (SEE ELECTRICAL PLANS)
- (EQ) ELECTRICAL EQUIPMENT, (SEE ELECTRICAL PLANS)
- (ES) ENTRY ADA SIGN PER DETAIL D/C6.5a
- (ET) WASTEWATER EVAPORATION TANK PER UTILITY PLAN
- 4 (EV1) UNDERGROUND CONDUIT AND UNDERGROUND ROUGH-IN BOX TO BE INSTALLED BY GENERAL CONTRACTOR FOR FUTURE LEVEL-2 CLIPPERCREEK CS-40 EV CHARGER PER DETAIL D/C6.10a
- (EV2) UNDERGROUND CONDUIT AND UNDERGROUND ROUGH-IN BOX TO BE INSTALLED BY GENERAL CONTRACTOR FOR FUTURE LEVEL-2 EVSE 3703 EV CHARGER PER DETAIL E/C6.10a
- (EV3) UNDERGROUND CONDUIT AND UNDERGROUND ROUGH-IN BOX TO BE INSTALLED BY GENERAL CONTRACTOR FOR FUTURE LEVEL-3 ABB TERRA 185KW EV FAST CHARGER. SEE ELECTRICAL PLANS.
- (EV4) UNDERGROUND CONDUIT AND UNDERGROUND ROUGH-IN BOX TO BE INSTALLED BY GENERAL CONTRACTOR FOR FUTURE LEVEL-2 CLIPPERCREEK 80 AMP EV FAST CHARGER PER DETAIL F/C6.10a
- (FP) PACKAGED FIRE BOOSTER PUMP BUILDING AND SLAB PER DETAIL A/C5.2a B/C5.2a
- (GF) GUY WIRE TO BE SHORTENED AND REINSTALLED BY OTHERS
- (GR) CONCRETE PAD PER DETAIL E/C6.5a FOR TEMPORARY MOBILE EMERGENCY GENERATOR THAT WILL TIE-IN TO MAIN DISTRIBUTION BOARD AND WILL SUPPORT ALL ELECTRICAL IMPROVEMENTS, (SEE ELECTRICAL PLANS)
- (GT) GATE TRACK PER DETAIL F/C6.1a
- (HC) HEAVY DUTY CONCRETE PER DETAIL B/C6.0a
- (HR) HANDRAILS PER DETAIL E/C6.6a
- (MB) LOCKING CURBSIDE MAILBOX PER DETAIL I/C6.5a
- (ME) MECHANICAL EQUIPMENT AND CONCRETE PAD PER MECHANICAL & STRUCTURAL PLANS
- (MN) MONUMENT SIGN WITH SCE LOGO PER DETAIL G/C6.5a
- (MS1) MOWSTRIP FOR SECURITY FENCE PER DETAIL H/C6.0a
- (MS2) MOWSTRIP PER DETAIL I/C6.0a
- (MT) LOCATION FOR FUTURE MICROWAVE TOWER
- (PB) PUSH BUTTON PEDESTAL PER DETAIL C/C6.1a
- (PS) POLE STORAGE RACK PER DETAIL A/C6.5a
- (R1) AUTOMATIC GATE PER DETAIL A/C6.1a
- (RA) ADA RAMP PER DETAIL A/C6.6a
- (RB) ROLL-OFF BINS TO BE FURNISHED BY SCE AND INSTALLED BY GENERAL CONTRACTOR
- (SB) SWITCHBOARD PAD PER DETAIL D/C6.6a. SWITCHBOARD TO HAVE A TRANSFER SWITCH AND HOOK-UP CONNECTION TO TIE-IN A TEMPORARY EMERGENCY GENERATOR. (SEE ELECTRICAL PLANS)
- (SF) FURNISH AND INSTALL 8' SECURITY FENCE PER DETAIL J/C6.1a
- (SF1) FURNISH AND INSTALL 9.5' TALL SECURITY FENCE TO MEET SCE MINIMUM HEIGHT REQUIREMENT PER DETAIL J/C6.1a
- (SH) SHOTCRETE IMPROVEMENTS PER GRADING AND DRAINAGE PLAN
- (SP) SUMP PIT PER UTILITY PLAN
- (SR) STAIR AND HANDRAIL PER DETAIL E/C6.6a
- (ST) SEPTIC TANK PER UTILITY PLAN
- (TE) TRASH ENCLOSURE PER DETAIL A/C6.8a
- (VG1) REINFORCED CONCRETE VALLEY GUTTER PER DETAIL F/C6.0a
- (VG2) CONCRETE VALLEY GUTTER PER DETAIL E/C6.0a
- (VG3) 3' REINFORCED CONCRETE VALLEY GUTTER PER DETAIL G/C6.0a
- (W1) RETAINING WALL AND GUARDRAIL PER DETAIL G/C6.6a
- (W2) RETAINING WALL WITH NO GUARDRAILS PER DETAIL G/C6.6a
- (WM) WALL MOUNTED ADA PARKING SIGN PER DETAIL F/C6.6a
- (WS) CONCRETE PRE-CAST WHEELSTOP PER DETAIL J/C6.0a
- (WT) WATER TANK PER DETAIL A/C5.0a
- 3 (VR) VEEDER ROOT. MODEL TLS-350. SEE FUEL CANOPY PLANS FOR ADDITIONAL INFORMATION.
- BO BOLLARD PER DETAIL K/C6.0a
- CO CLEANOUT PER UTILITY PLAN
- OMPI DRAIN INLET PER GRADING AND DRAINAGE PLAN
- U-36 STORM DRAIN INLET PER GRADING AND DRAINAGE PLAN
- FIRE HYDRANT PER UTILITY PLAN
- FP FLAG POLE PER DEATIL G/C6.7a
- SP SECURITY POLE PER CORPORATE SECURITY
- LP LIGHT POLE PER ELECTRICAL PLANS
- MANHOLE PER UTILITY PLAN
- LIMITS OF ASPHALT CONCRETE PAVEMENT IMPROVEMENTS PER DETAIL L/C6.0a
- LIMITS OF 2" ASPHALT OVERLAY AND SEAL COAT
- PROPOSED BUILDING IMPROVEMENTS. SEE ARCHITECTURAL PLANS
- LIMITS OF CONCRETE IMPROVEMENTS
- LIMITS OF RIP-RAP PER DETAIL F/C6.7a
- LIMITS OF CLASS 2 AGGREGATE BASE PER DETAIL H/C6.6a
- LIMITS OF MULCH IMPROVEMENTS. MULCH TO BE CHIPPED WALK-ON TYPE WOOD WITH A THICKNESS OF 4 INCHES
- LIMITS OF LANDSCAPING

REGISTERED PROFESSIONAL ENGINEER PAIGE E. NOGA No. 78,395 CIVIL STATE OF CALIFORNIA
12/3/2021
Date Signed:

PLANS PREPARED BY:
Blair, Church & Flynn
CONSULTING ENGINEERS
451 Clovis Avenue, Suite 200
Clovis, California 93612
Tel (559) 326-1400
Fax (559) 326-1500

NO.	REVISIONS	DATE	SAP WO	SUPV	APPROVED	ENGR	CK'D	MADE	P.E.
1	ADDENDUM #1	03-19-2021				PN	PN	JR	PN
2	ENVIRONMENTAL HEALTH PLAN CHECK REVISIONS	06-18-2021				PN	PN	JR	PN
3	ADDENDUM #2	12-03-2021				PN	PN	JR	PN
4	ADDENDUM #3	02-18-2022				PN	PN	JR	PN

REFERENCE DRAWINGS | REFERENCE DRAWINGS

LOCATION: BISHOP, CALIFORNIA

BISHOP SERVICE CENTER
SITE DEVELOPEMENT
SITE PLAN

VOLUME 1

SOUTHERN CALIFORNIA EDISON An EDISON INTERNATIONAL Company

SHEET NO. C1.4a

SCALE: AS NOTED

14 OF 66 SHTS.

100% CONSTRUCTION DOCUMENTS (12-03-2021)

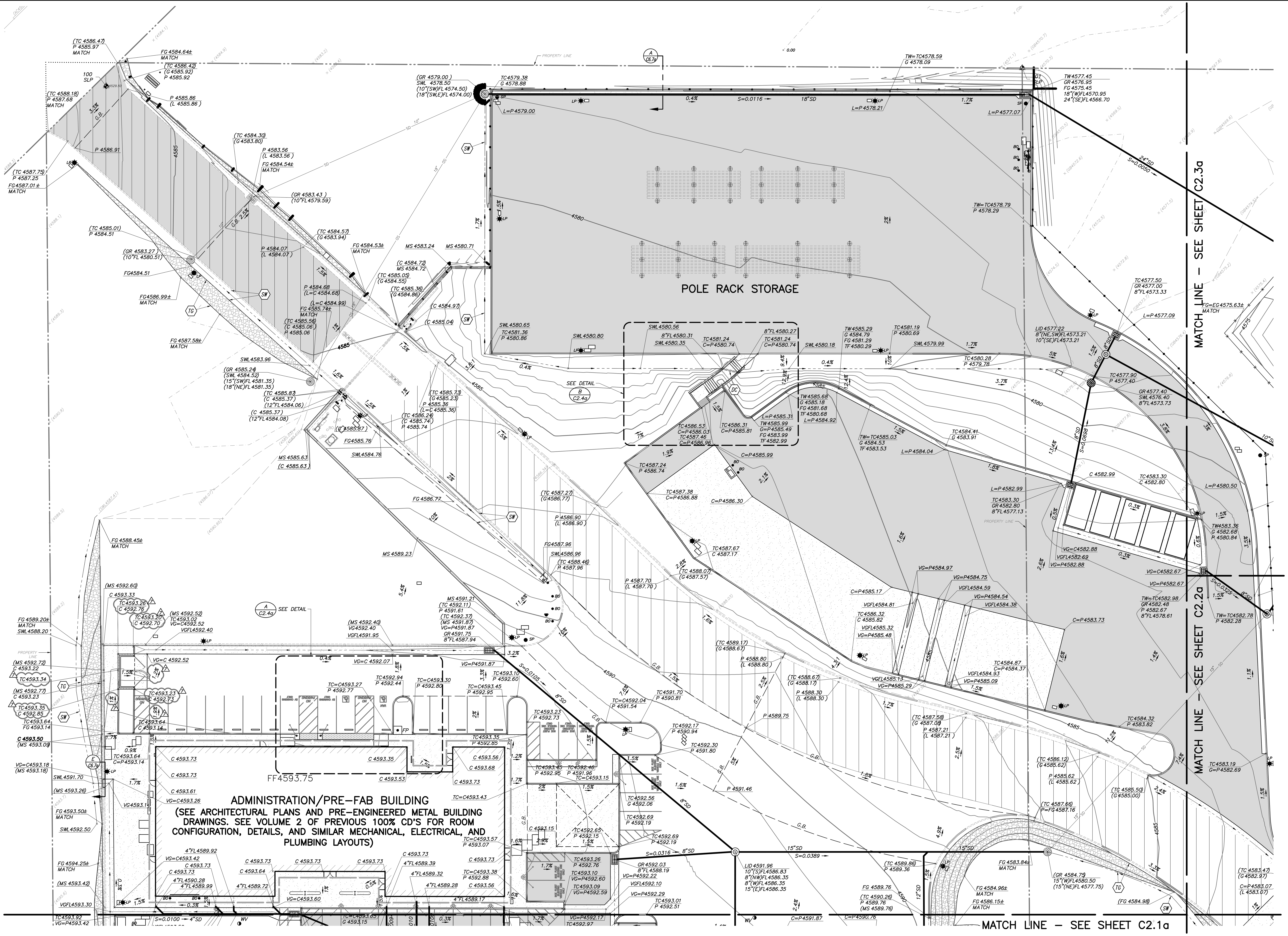

CONSTRUCTION LEGEND:

SW	EARTHEN SWALE (5' WIDE) PER DETAIL M/C6.0a
TG	PERFORM TRANSITION GRADING
DC	PROVIDE 8" DUCTILE IRON CULVERT
BA	BASIN INLET/OUTLET PER DETAIL D/C2.4a
FE	FURNISH AND INSTALL TYPE A FLARE END SECTION PER DETAIL F/C6.5a

GRADING AND DRAINAGE LEGEND:

C	CONCRETE
CR	CRUSHED ROCK
EG	EXISTING GRADE
FF	FINISHED FLOOR
FG	FINISHED GRADE
FL	FLOWLINE
G	GUTTER
GR	GRATE
GRA	GRAVEL
GU	GUNITE
L	GUTTER LIP
MS	MOW STRIP
P	PAVEMENT
SWL	SWALE
TC	TOP OF CURB
TW	TOP OF WALL
VG	VALLEY GUTTER
VGFL	VALLEY GUTTER FLOWLINE
(FG4583.90)	EXISTING ELEVATION
FG4583.90	PROPOSED ELEVATION
2.9%	DIRECTION OF DRAINAGE
S=0.0050	FLOWLINE SLOPE
	U-36 STORM DRAIN INLET PER DETAIL E/C6.4a
	OMPI DRAIN INLET PER DETAIL F/C6.4a
● CO	SURFACE CLEANOUT PER DETAIL G/C6.4a
8"SD	FURNISH AND INSTALL PVC SDR-35 OR N-12 WT IB STORM DRAIN PIPELINE, SEE PLANS, SIZE AS NOTED. TRENCH PER DETAIL D/C6.4a
	STORM DRAIN MANHOLE PER DETAIL I/C6.6a
	DIRECTION OF FLOW
G.B.	GRADE BREAK
	LIMITS OF RIP-RAP IMPROVEMENTS PER DETAIL F/C6.7a
	LIMITS OF OVER EXCAVATION FOR FUTURE BUILDING. REFER TO SOILS REPORT. DEPTH OF OVER EXCAVATION TO BE A MINIMUM OF 24" BELOW EXISTING GRADE. (SHOWN FOR REFERENCE, CONSTRUCTED DURING PHASE 1)
4585	PROPOSED MAJOR CONTOUR LINE
	PROPOSED MINOR CONTOUR LINE

GRADING AND DRAINAGE NOTES:

THE REQUIREMENTS AND INFORMATION SET OUT BELOW ARE PROVIDED FOR THE CONTRACTOR'S CONVENIENCE AND DO NOT ENCOMPASS ALL PROJECT REQUIREMENTS DESCRIBED BY THE PROJECT PLANS AND SPECIFICATIONS AND/OR APPLICABLE LAWS, REGULATIONS AND/OR BUILDING CODES.

1. CONSTRUCTION OF ALL PROJECT SITE IMPROVEMENTS SUBJECT TO ADA ACCESS COMPLIANCE, INCLUDING ACCESSIBLE PATH OF TRAVEL, CURB RETURNS, PARKING STALL(S) AND UNLOADING AREAS, BARRIER FREE AMENITIES AND/OR OTHER APPLICABLE SITE IMPROVEMENTS SHALL CONFORM TO THE AMERICANS WITH DISABILITIES ACT, CALIFORNIA TITLE 24, AND THE CALIFORNIA BUILDING CODE, CURRENT EDITION(S).
2. CONTRACTOR SHALL FIELD VERIFY ALL GRADES AND SLOPES PRIOR TO THE PLACEMENT OF CONCRETE AND/OR PAVEMENT FOR CONFORMANCE WITH ADA ACCESS COMPLIANCE REQUIREMENTS. EXAMPLES OF MINIMUM AND MAXIMUM LIMITS RELATED TO ADA ACCESS COMPLIANCE INCLUDE, BUT ARE NOT LIMITED TO:
   a) ACCESSIBLE PATH OF TRAVEL CROSS-SLOPE SHALL NOT EXCEED 2.00%
   b) ACCESSIBLE PATH OF TRAVEL LONGITUDINAL SLOPES SHALL NOT EXCEED 5.00%
   c) RAMP LONGITUDINAL SLOPES SHALL NOT EXCEED 8.33%
   d) WALKS SHALL NOT HAVE LESS THAN 48 INCHES OF UNOBSTRUCTED WIDTH
3. CONTRACTOR MUST IMMEDIATELY NOTIFY THE ENGINEER OF RECORD, IDENTIFIED BY THE PROFESSIONAL ENGINEERING SEAL AND SIGNATURE ON THESE PLANS, OF ANY SITE CONDITION(S) AND/OR DESIGN INFORMATION THAT PREVENTS THE CONTRACTOR FROM COMPLYING WITH THE LAWS, REGULATIONS AND/OR BUILDING CODES GOVERNING ADA ACCESS COMPLIANCE.
4. GROUND SLOPES AWAY FROM BUILDING PADS IN LANDSCAPED OR DIRT AREAS SHALL BE NO LESS THAN 5.0% FOR AT LEAST TEN (10) FEET, OR AS OTHERWISE NOTED ON THE PLANS.
5. DRAINAGE SHALL NOT BE ALLOWED ONTO ADJACENT PROPERTY.
6. ALL FILL MATERIAL USED TO SUPPORT THE FOUNDATIONS OF ANY BUILDING OR STRUCTURE SHALL BE PLACED UNDER THE DIRECTION OF A LICENSED GEOTECHNICAL ENGINEER, AND IN COMPLIANCE WITH THE PROJECT SPECIFICATIONS. A SOILS COMPACTION REPORT SHALL BE SUBMITTED TO THE ENGINEER OF RECORD AS REQUIRED BY THE PROJECT SPECIFICATIONS.
7. AS A FIRST ORDER OF WORK, THE CONTRACTOR SHALL POTHOLE THE EXISTING UTILITY LINES AT THE POINT OF CONNECTION TO VERIFY THE LOCATION, SIZE, PIPE MATERIAL AND ELEVATION SO THAT THE ENGINEER CAN MAKE ELEVATION AND/OR ALIGNMENT ADJUSTMENTS IF NECESSARY.
8. FURNISH AND INSTALL CALTRANS DROP INLET TYPE OMPI PER 2010 CALTRANS STANDARD PLAN D75A WITH TYPE 36R GRATE PER 2010 CALTRANS STANDARD PLAN D77B. ADD TRASH RACK PER 2010 CALTRANS STANDARD PLAN D75C.

ESTIMATED GRADING QUANTITIES:

EXCAVATION (CUT)	4,979 C.Y.
EMBANKMENT (FILL)	18,944 C.Y.

GRADING QUANTITIES ARE SHOWN FOR PERMIT PURPOSES ONLY. THE CONTRACTOR IS RESPONSIBLE FOR CALCULATING HIS OWN EARTHWORK QUANTITIES FOR BIDDING PURPOSES.

0 5 10 20 40
SCALE IN FEET

REGISTERED PROFESSIONAL ENGINEER PAIGE E. NOGA No. 78,395 CIVIL STATE OF CALIFORNIA

5/2/2022
Date Signed:

PLANS PREPARED BY:
Blair, Church & Flynn
CONSULTING ENGINEERS
451 Clovis Avenue, Suite 200
Clovis, California 93612
Tel (559) 326-1400
Fax (559) 326-1500

NO.	REVISIONS	DATE	SAP WO	SUPV	APPROVED	ENGR	CK'D	MADE	P.E.
7	TRASH ENCLOSURE REVISIONS	07-20-2022				PN	PN	JR	PN
1	ADDENDUM #1	03-19-2021				PN	PN	JR	PN
2	ENVIRONMENTAL HEALTH PLAN CHECK REVISIONS	06-18-2021				PN	PN	JR	PN
3	ADDENDUM #2	12-03-2021				PN	PN	JR	PN
4	ADDENDUM #3	02-18-2022				PN	PN	JR	PN
5	FIRE DEPARTMENT INSPECTION REVISIONS	05-02-2022				PN	PN	JR	PN
6	STATE WATER BOARD REVISIONS	06-17-2022				PN	PN	JR	PN

REFERENCE DRAWINGS | REFERENCE DRAWINGS

LOCATION: BISHOP, CALIFORNIA

BISHOP SERVICE CENTER
SITE DEVELOPEMENT
GRADING AND DRAINAGE PLAN

VOLUME 1

SOUTHERN CALIFORNIA EDISON — An EDISON INTERNATIONAL Company

SHEET NO. C2.0a
SCALE: AS NOTED
15 OF 66 SHTS.

100% CONSTRUCTION DOCUMENTS (06-17-2022)

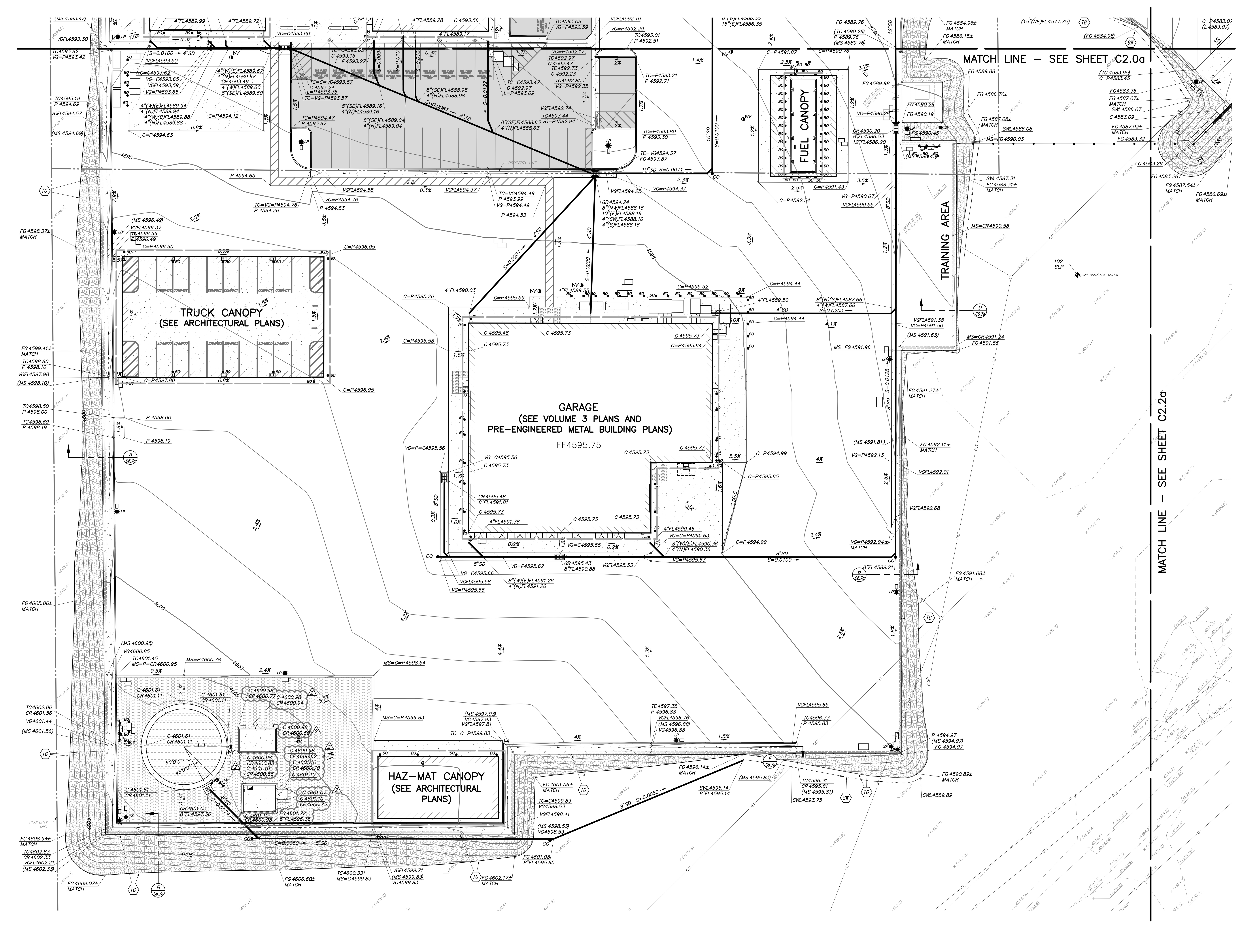

CONSTRUCTION LEGEND:

Symbol	Description
SW	EARTHEN SWALE (5' WIDE) PER DETAIL M/C6.0a
TG	PERFORM TRANSITION GRADING
DC	PROVIDE 8" DUCTILE IRON CULVERT
BA	BASIN INLET/OUTLET PER DETAIL D/C2.4a
FE	FURNISH AND INSTALL TYPE A FLARE END SECTION PER DETAIL F/C6.5a

GRADING AND DRAINAGE LEGEND:

Symbol	Description
C	CONCRETE
CR	CRUSHED ROCK
EG	EXISTING GRADE
FF	FINISHED FLOOR
FG	FINISHED GRADE
FL	FLOWLINE
G	GUTTER
GR	GRATE
GRA	GRAVEL
GU	GUNITE
L	GUTTER LIP
MS	MOW STRIP
P	PAVEMENT
SWL	SWALE
TC	TOP OF CURB
TW	TOP OF WALL
VG	VALLEY GUTTER
VGFL	VALLEY GUTTER FLOWLINE
(FG4583.90)	EXISTING ELEVATION
FG4583.90	PROPOSED ELEVATION
2.9%	DIRECTION OF DRAINAGE
S=0.0050	FLOWLINE SLOPE
	U-36 STORM DRAIN INLET PER DETAIL E/C6.4a
	OMPI DRAIN INLET PER DETAIL F/C6.4a
• CO	SURFACE CLEANOUT PER DETAIL G/C6.4a
8"SD	FURNISH AND INSTALL PVC SDR-35 OR N-12 WT IB STORM DRAIN PIPELINE, SEE PLANS, SIZE AS NOTED. TRENCH PER DETAIL D/C6.4a
	STORM DRAIN MANHOLE PER DETAIL I/C6.6a
	DIRECTION OF FLOW
G.B.	GRADE BREAK
	LIMITS OF RIP-RAP IMPROVEMENTS PER DETAIL F/C6.7a
	LIMITS OF OVER EXCAVATION FOR FUTURE BUILDING. REFER TO SOILS REPORT. DEPTH OF OVER EXCAVATION TO BE A MINIMUM OF 24" BELOW EXISTING GRADE. (SHOWN FOR REFERENCE, CONSTRUCTED DURING PHASE 1)
4585	PROPOSED MAJOR CONTOUR LINE
	PROPOSED MINOR CONTOUR LINE

GRADING AND DRAINAGE NOTES:

THE REQUIREMENTS AND INFORMATION SET OUT BELOW ARE PROVIDED FOR THE CONTRACTOR'S CONVENIENCE AND DO NOT ENCOMPASS ALL PROJECT REQUIREMENTS DESCRIBED BY THE PROJECT PLANS AND SPECIFICATIONS AND/OR APPLICABLE LAWS, REGULATIONS AND/OR BUILDING CODES.

1. CONSTRUCTION OF ALL PROJECT SITE IMPROVEMENTS SUBJECT TO ADA ACCESS COMPLIANCE, INCLUDING ACCESSIBLE PATH OF TRAVEL, CURB RETURNS, PARKING STALL(S) AND UNLOADING AREAS, BARRIER FREE AMENITIES AND/OR OTHER APPLICABLE SITE IMPROVEMENTS SHALL CONFORM TO THE AMERICANS WITH DISABILITIES ACT, CALIFORNIA TITLE 24, AND THE CALIFORNIA BUILDING CODE, CURRENT EDITION(S).
2. CONTRACTOR SHALL FIELD VERIFY ALL GRADES AND SLOPES PRIOR TO THE PLACEMENT OF CONCRETE AND/OR PAVEMENT FOR CONFORMANCE WITH ADA ACCESS COMPLIANCE REQUIREMENTS. EXAMPLES OF MINIMUM AND MAXIMUM LIMITS RELATED TO ADA ACCESS COMPLIANCE INCLUDE, BUT ARE NOT LIMITED TO:
   a) ACCESSIBLE PATH OF TRAVEL CROSS-SLOPE SHALL NOT EXCEED 2.00%
   b) ACCESSIBLE PATH OF TRAVEL LONGITUDINAL SLOPES SHALL NOT EXCEED 5.00%
   c) RAMP LONGITUDINAL SLOPES SHALL NOT EXCEED 8.33%
   d) WALKS SHALL NOT HAVE LESS THAN 48 INCHES OF UNOBSTRUCTED WIDTH
3. CONTRACTOR MUST IMMEDIATELY NOTIFY THE ENGINEER OF RECORD, IDENTIFIED BY THE PROFESSIONAL ENGINEERING SEAL AND SIGNATURE ON THESE PLANS, OF ANY SITE CONDITION(S) AND/OR DESIGN INFORMATION THAT PREVENTS THE CONTRACTOR FROM COMPLYING WITH THE LAWS, REGULATIONS AND/OR BUILDING CODES GOVERNING ADA ACCESS COMPLIANCE.
4. GROUND SLOPES AWAY FROM BUILDING PADS IN LANDSCAPED OR DIRT AREAS SHALL BE NO LESS THAN 5.0% FOR AT LEAST TEN (10) FEET, OR AS OTHERWISE NOTED ON THE PLANS.
5. DRAINAGE SHALL NOT BE ALLOWED ONTO ADJACENT PROPERTY.
6. ALL FILL MATERIAL USED TO SUPPORT THE FOUNDATIONS OF ANY BUILDING OR STRUCTURE SHALL BE PLACED UNDER THE DIRECTION OF A LICENSED GEOTECHNICAL ENGINEER, AND IN COMPLIANCE WITH THE PROJECT SPECIFICATIONS. A SOILS COMPACTION REPORT SHALL BE SUBMITTED TO THE ENGINEER OF RECORD AS REQUIRED BY THE PROJECT SPECIFICATIONS.
7. AS A FIRST ORDER OF WORK, THE CONTRACTOR SHALL POTHOLE THE EXISTING UTILITY LINES AT THE POINT OF CONNECTION TO VERIFY THE LOCATION, SIZE, PIPE MATERIAL AND ELEVATION SO THAT THE ENGINEER CAN MAKE ELEVATION AND/OR ALIGNMENT ADJUSTMENTS IF NECESSARY.
8. FURNISH AND INSTALL CALTRANS DROP INLET TYPE OMPI PER 2010 CALTRANS STANDARD PLAN D75A WITH TYPE 36R GRATE PER 2010 CALTRANS STANDARD PLAN D77B. ADD TRASH RACK PER 2010 CALTRANS STANDARD PLAN D75C.

ESTIMATED GRADING QUANTITIES:

EXCAVATION (CUT)	4,979 C.Y.
EMBANKMENT (FILL)	18,944 C.Y.

GRADING QUANTITIES ARE SHOWN FOR PERMIT PURPOSES ONLY. THE CONTRACTOR IS RESPONSIBLE FOR CALCULATING HIS OWN EARTHWORK QUANTITIES FOR BIDDING PURPOSES.

0 5 10 20 40 SCALE IN FEET

REGISTERED PROFESSIONAL ENGINEER PAIGE E. NOGA No. 78,395 CIVIL STATE OF CALIFORNIA

12/3/2021 Date Signed:

PLANS PREPARED BY:
Blair, Church & Flynn
CONSULTING ENGINEERS
451 Clovis Avenue, Suite 200
Clovis, California 93612
Tel (559) 326-1400
Fax (559) 326-1500

NO.	REVISIONS	DATE	SAP WO	SUPV	APPROVED	ENGR	CK'D	MADE	P.E.
1	ADDENDUM #1	03-19-2021				PN	PN	JR	PN
2	ENVIRONMENTAL HEALTH PLAN CHECK REVISIONS	06-18-2021				PN	PN	JR	PN
3	ADDENDUM #2	12-03-2021				PN	PN	JR	PN
4	ADDENDUM #3	02-18-2022				PN	PN	JR	PN

REFERENCE DRAWINGS | REFERENCE DRAWINGS

LOCATION: BISHOP, CALIFORNIA

BISHOP SERVICE CENTER
SITE DEVELOPEMENT
GRADING AND DRAINAGE PLAN
VOLUME 1

SOUTHERN CALIFORNIA EDISON An EDISON INTERNATIONAL Company

SHEET NO. C2.1a
SCALE: AS NOTED
16 OF 66 SHTS.

100% CONSTRUCTION DOCUMENTS (12-03-2021)

SOUTHERN CALIFORNIA EDISON
2012 - 5 SIZE

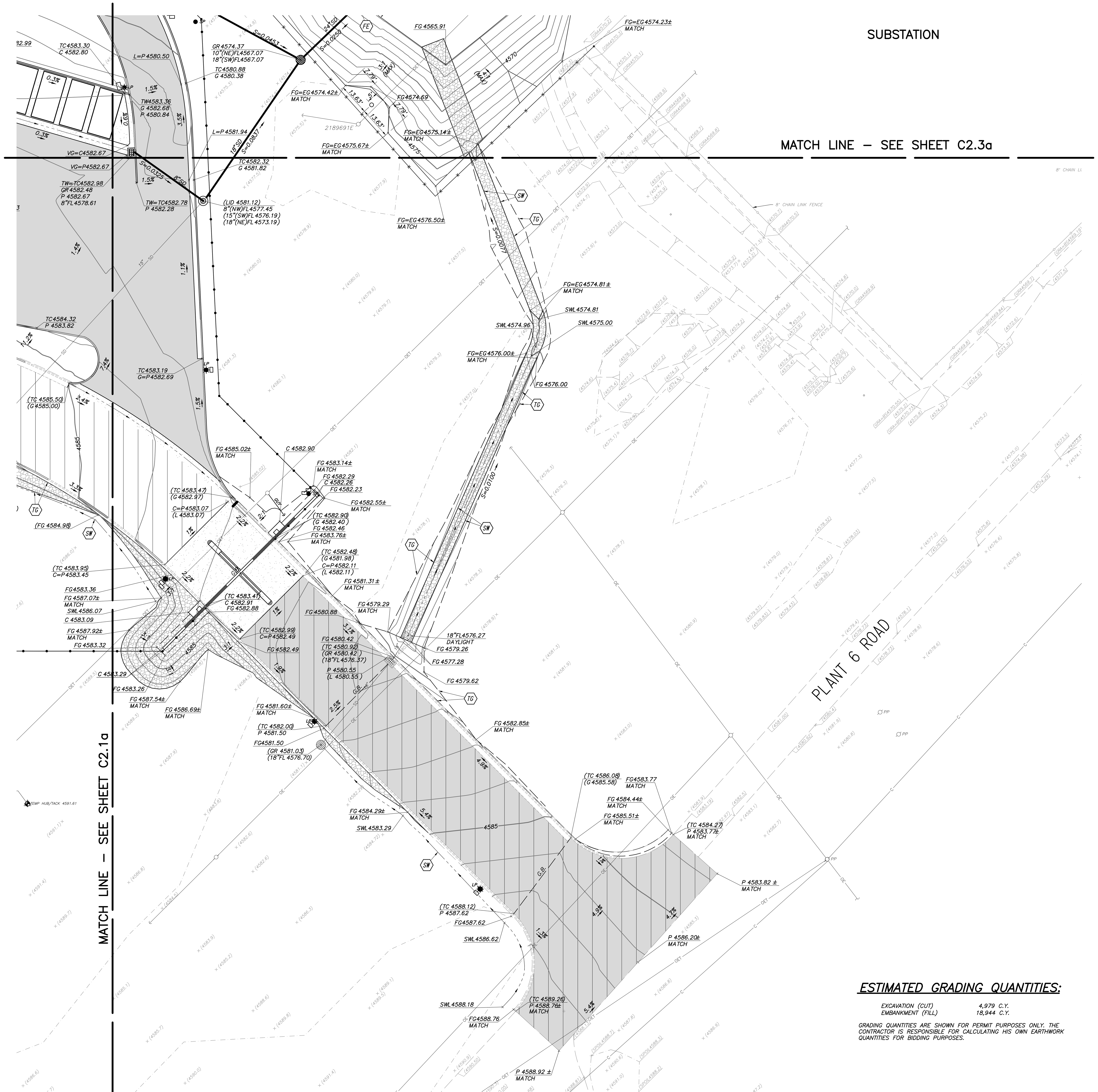

CONSTRUCTION LEGEND:

SW	EARTHEN SWALE (5' WIDE) PER DETAIL M/C6.0a
TG	PERFORM TRANSITION GRADING
DC	PROVIDE 8" DUCTILE IRON CULVERT
BA	BASIN INLET/OUTLET PER DETAIL D/C2.4a
FE	FURNISH AND INSTALL TYPE A FLARE END SECTION PER DETAIL F/C6.5a

GRADING AND DRAINAGE LEGEND:

C	CONCRETE
CR	CRUSHED ROCK
EG	EXISTING GRADE
FF	FINISHED FLOOR
FG	FINISHED GRADE
FL	FLOWLINE
G	GUTTER
GR	GRATE
GRA	GRAVEL
GU	GUNITE
L	GUTTER LIP
MS	MOW STRIP
P	PAVEMENT
SWL	SWALE
TC	TOP OF CURB
TW	TOP OF WALL
VG	VALLEY GUTTER
VGFL	VALLEY GUTTER FLOWLINE
(FG4583.90)	EXISTING ELEVATION
FG4583.90	PROPOSED ELEVATION
2.9%	DIRECTION OF DRAINAGE
S=0.0050	FLOWLINE SLOPE
	U-36 STORM DRAIN INLET PER DETAIL E/C6.4a
	OMPI DRAIN INLET PER DETAIL F/C6.4a
• CO	SURFACE CLEANOUT PER DETAIL G/C6.4a
8"SD	FURNISH AND INSTALL PVC SDR-35 OR N-12 WT IB STORM DRAIN PIPELINE, SEE PLANS, SIZE AS NOTED. TRENCH PER DETAIL D/C6.4a
	STORM DRAIN MANHOLE PER DETAIL I/C6.6a
	DIRECTION OF FLOW
G.B.	GRADE BREAK
	LIMITS OF RIP-RAP IMPROVEMENTS PER DETAIL F/C6.7a
	LIMITS OF OVER EXCAVATION FOR FUTURE BUILDING. REFER TO SOILS REPORT. DEPTH OF OVER EXCAVATION TO BE A MINIMUM OF 24" BELOW EXISTING GRADE. (SHOWN FOR REFERENCE, CONSTRUCTED DURING PHASE 1)
4585	PROPOSED MAJOR CONTOUR LINE
	PROPOSED MINOR CONTOUR LINE

GRADING AND DRAINAGE NOTES:

THE REQUIREMENTS AND INFORMATION SET OUT BELOW ARE PROVIDED FOR THE CONTRACTOR'S CONVENIENCE AND DO NOT ENCOMPASS ALL PROJECT REQUIREMENTS DESCRIBED BY THE PROJECT PLANS AND SPECIFICATIONS AND/OR APPLICABLE LAWS, REGULATIONS AND/OR BUILDING CODES.

1. CONSTRUCTION OF ALL PROJECT SITE IMPROVEMENTS SUBJECT TO ADA ACCESS COMPLIANCE, INCLUDING ACCESSIBLE PATH OF TRAVEL, CURB RETURNS, PARKING STALL(S) AND UNLOADING AREAS, BARRIER FREE AMENITIES AND/OR OTHER APPLICABLE SITE IMPROVEMENTS SHALL CONFORM TO THE AMERICANS WITH DISABILITIES ACT, CALIFORNIA TITLE 24, AND THE CALIFORNIA BUILDING CODE, CURRENT EDITION(S).
2. CONTRACTOR SHALL FIELD VERIFY ALL GRADES AND SLOPES PRIOR TO THE PLACEMENT OF CONCRETE AND/OR PAVEMENT FOR CONFORMANCE WITH ADA ACCESS COMPLIANCE REQUIREMENTS. EXAMPLES OF MINIMUM AND MAXIMUM LIMITS RELATED TO ADA ACCESS COMPLIANCE INCLUDE, BUT ARE NOT LIMITED TO:
   a) ACCESSIBLE PATH OF TRAVEL CROSS-SLOPE SHALL NOT EXCEED 2.00%
   b) ACCESSIBLE PATH OF TRAVEL LONGITUDINAL SLOPES SHALL NOT EXCEED 5.00%
   c) RAMP LONGITUDINAL SLOPES SHALL NOT EXCEED 8.33%
   d) WALKS SHALL NOT HAVE LESS THAN 48 INCHES OF UNOBSTRUCTED WIDTH
3. CONTRACTOR MUST IMMEDIATELY NOTIFY THE ENGINEER OF RECORD, IDENTIFIED BY THE PROFESSIONAL ENGINEERING SEAL AND SIGNATURE ON THESE PLANS, OF ANY SITE CONDITION(S) AND/OR DESIGN INFORMATION THAT PREVENTS THE CONTRACTOR FROM COMPLYING WITH THE LAWS, REGULATIONS AND/OR BUILDING CODES GOVERNING ADA ACCESS COMPLIANCE.
4. GROUND SLOPES AWAY FROM BUILDING PADS IN LANDSCAPED OR DIRT AREAS SHALL BE NO LESS THAN 5.0% FOR AT LEAST TEN (10) FEET, OR AS OTHERWISE NOTED ON THE PLANS.
5. DRAINAGE SHALL NOT BE ALLOWED ONTO ADJACENT PROPERTY.
6. ALL FILL MATERIAL USED TO SUPPORT THE FOUNDATIONS OF ANY BUILDING OR STRUCTURE SHALL BE PLACED UNDER THE DIRECTION OF A LICENSED GEOTECHNICAL ENGINEER, AND IN COMPLIANCE WITH THE PROJECT SPECIFICATIONS. A SOILS COMPACTION REPORT SHALL BE SUBMITTED TO THE ENGINEER OF RECORD AS REQUIRED BY THE PROJECT SPECIFICATIONS.
7. AS A FIRST ORDER OF WORK, THE CONTRACTOR SHALL POTHOLE THE EXISTING UTILITY LINES AT THE POINT OF CONNECTION TO VERIFY THE LOCATION, SIZE, PIPE MATERIAL AND ELEVATION SO THAT THE ENGINEER CAN MAKE ELEVATION AND/OR ALIGNMENT ADJUSTMENTS IF NECESSARY.
8. FURNISH AND INSTALL CALTRANS DROP INLET TYPE OMPI PER 2010 CALTRANS STANDARD PLAN D75A WITH TYPE 36R GRATE PER 2010 CALTRANS STANDARD PLAN D77B. ADD TRASH RACK PER 2010 CALTRANS STANDARD PLAN D75C.

ESTIMATED GRADING QUANTITIES:

EXCAVATION (CUT)	4,979 C.Y.
EMBANKMENT (FILL)	18,944 C.Y.

GRADING QUANTITIES ARE SHOWN FOR PERMIT PURPOSES ONLY. THE CONTRACTOR IS RESPONSIBLE FOR CALCULATING HIS OWN EARTHWORK QUANTITIES FOR BIDDING PURPOSES.

REGISTERED PROFESSIONAL ENGINEER PAIGE E. NOGA No. 78,395 CIVIL STATE OF CALIFORNIA
12/3/2021
Date Signed:

PLANS PREPARED BY:
Blair, Church & Flynn
CONSULTING ENGINEERS
451 Clovis Avenue, Suite 200
Clovis, California 93612
Tel (559) 326-1400
Fax (559) 326-1500

NO.	REVISIONS	DATE	SAP WO	SUPV	APPROVED	ENGR	CK'D	MADE	P.E.
1	ADDENDUM #1	03-19-2021				PN	PN	JR	PN
2	ENVIRONMENTAL HEALTH PLAN CHECK REVISIONS	06-18-2021				PN	PN	JR	PN
3	ADDENDUM #2	12-03-2021				PN	PN	JR	PN
4	ADDENDUM #3	02-18-2022				PN	PN	JR	PN

REFERENCE DRAWINGS | REFERENCE DRAWINGS

LOCATION: BISHOP, CALIFORNIA

BISHOP SERVICE CENTER
SITE DEVELOPEMENT
GRADING AND DRAINAGE PLAN
VOLUME 1

SOUTHERN CALIFORNIA EDISON An EDISON INTERNATIONAL Company

SHEET NO. C2.2a
SCALE: AS NOTED
17 OF 66 SHTS.

100% CONSTRUCTION DOCUMENTS (12-03-2021)

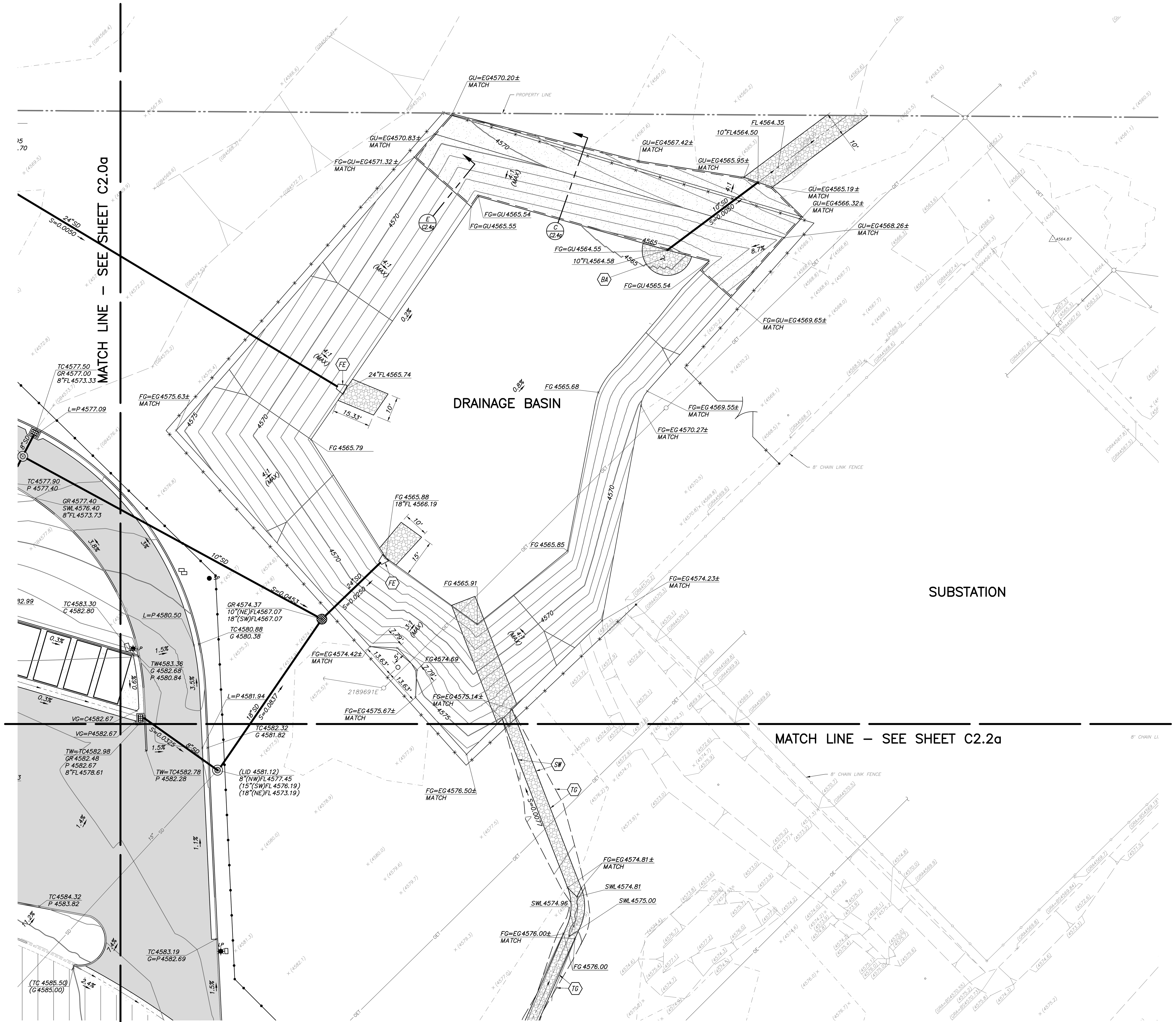

0 5 10 20 40
SCALE IN FEET

CONSTRUCTION LEGEND:

SW	EARTHEN SWALE (5' WIDE) PER DETAIL M/C6.0a
TG	PERFORM TRANSITION GRADING
DC	PROVIDE 8" DUCTILE IRON CULVERT
BA	BASIN INLET/OUTLET PER DETAIL D/C2.4a
FE	FURNISH AND INSTALL TYPE A FLARE END SECTION PER DETAIL F/C6.5a

GRADING AND DRAINAGE LEGEND:

C	CONCRETE
CR	CRUSHED ROCK
EG	EXISTING GRADE
FF	FINISHED FLOOR
FG	FINISHED GRADE
FL	FLOWLINE
G	GUTTER
GR	GRATE
GRA	GRAVEL
GU	GUNITE
L	GUTTER LIP
MS	MOW STRIP
P	PAVEMENT
SWL	SWALE
TC	TOP OF CURB
TW	TOP OF WALL
VG	VALLEY GUTTER
VGFL	VALLEY GUTTER FLOWLINE
(FG4583.90)	EXISTING ELEVATION
FG4583.90	PROPOSED ELEVATION
2.9%	DIRECTION OF DRAINAGE
S=0.0050	FLOWLINE SLOPE
	U-36 STORM DRAIN INLET PER DETAIL E/C6.4a
	OMPI DRAIN INLET PER DETAIL F/C6.4a
• CO	SURFACE CLEANOUT PER DETAIL G/C6.4a
8"SD	FURNISH AND INSTALL PVC SDR-35 OR N-12 WT IB STORM DRAIN PIPELINE, SEE PLANS, SIZE AS NOTED. TRENCH PER DETAIL D/C6.4a
	STORM DRAIN MANHOLE PER DETAIL I/C6.6a
	DIRECTION OF FLOW
G.B.	GRADE BREAK
	LIMITS OF RIP-RAP IMPROVEMENTS PER DETAIL F/C6.7a
	LIMITS OF OVER EXCAVATION FOR FUTURE BUILDING. REFER TO SOILS REPORT. DEPTH OF OVER EXCAVATION TO BE A MINIMUM OF 24" BELOW EXISTING GRADE. (SHOWN FOR REFERENCE, CONSTRUCTED DURING PHASE 1)
4585	PROPOSED MAJOR CONTOUR LINE
	PROPOSED MINOR CONTOUR LINE

GRADING AND DRAINAGE NOTES:

THE REQUIREMENTS AND INFORMATION SET OUT BELOW ARE PROVIDED FOR THE CONTRA CONVENIENCE AND DO NOT ENCOMPASS ALL PROJECT REQUIREMENTS DESCRIBED BY TH. PLANS AND SPECIFICATIONS AND/OR APPLICABLE LAWS, REGULATIONS AND/OR BUILDING

1. CONSTRUCTION OF ALL PROJECT SITE IMPROVEMENTS SUBJECT TO ADA ACCESS COM INCLUDING ACCESSIBLE PATH OF TRAVEL, CURB RETURNS, PARKING STALL(S) AND U. AREAS, BARRIER FREE AMENITIES AND/OR OTHER APPLICABLE SITE IMPROVEMENTS S CONFORM TO THE AMERICANS WITH DISABILITIES ACT, CALIFORNIA TITLE 24, AND THE BUILDING CODE, CURRENT EDITION(S).
2. CONTRACTOR SHALL FIELD VERIFY ALL GRADES AND SLOPES PRIOR TO THE PLACEME CONCRETE AND/OR PAVEMENT FOR CONFORMANCE WITH ADA ACCESS COMPLIANCE REQUIREMENTS. EXAMPLES OF MINIMUM AND MAXIMUM LIMITS RELATED TO ADA ACCE COMPLIANCE INCLUDE, BUT ARE NOT LIMITED TO:
   a) ACCESSIBLE PATH OF TRAVEL CROSS-SLOPE SHALL NOT EXCEED 2.00%
   b) ACCESSIBLE PATH OF TRAVEL LONGITUDINAL SLOPES SHALL NOT EXCEED 5.00%
   c) RAMP LONGITUDINAL SLOPES SHALL NOT EXCEED 8.33%
   d) WALKS SHALL NOT HAVE LESS THAN 48 INCHES OF UNOBSTRUCTED WIDTH
3. CONTRACTOR MUST IMMEDIATELY NOTIFY THE ENGINEER OF RECORD, IDENTIFIED BY T PROFESSIONAL ENGINEERING SEAL AND SIGNATURE ON THESE PLANS, OF ANY SITE CONDITION(S) AND/OR DESIGN INFORMATION THAT PREVENTS THE CONTRACTOR FROM COMPLYING WITH THE LAWS, REGULATIONS AND/OR BUILDING CODES GOVERNING ADA COMPLIANCE.
4. GROUND SLOPES AWAY FROM BUILDING PADS IN LANDSCAPED OR DIRT AREAS SHALL LESS THAN 5.0% FOR AT LEAST TEN (10) FEET, OR AS OTHERWISE NOTED ON THE
5. DRAINAGE SHALL NOT BE ALLOWED ONTO ADJACENT PROPERTY.
6. ALL FILL MATERIAL USED TO SUPPORT THE FOUNDATIONS OF ANY BUILDING OR STR SHALL BE PLACED UNDER THE DIRECTION OF A LICENSED GEOTECHNICAL ENGINEER, COMPLIANCE WITH THE PROJECT SPECIFICATIONS. A SOILS COMPACTION REPORT SHAL SUBMITTED TO THE ENGINEER OF RECORD AS REQUIRED BY THE PROJECT SPECIFICA
7. AS A FIRST ORDER OF WORK, THE CONTRACTOR SHALL POTHOLE THE EXISTING UTIL AT THE POINT OF CONNECTION TO VERIFY THE LOCATION, SIZE, PIPE MATERIAL AND SO THAT THE ENGINEER CAN MAKE ELEVATION AND/OR ALIGNMENT ADJUSTMENTS IF
8. FURNISH AND INSTALL CALTRANS DROP INLET TYPE OMPI PER 2010 CALTRANS S PLAN D75A WITH TYPE 36R GRATE PER 2010 CALTRANS STANDARD PLAN D77B. ADL RACK PER 2010 CALTRANS STANDARD PLAN D75C.

ESTIMATED GRADING QUANTITIES:

EXCAVATION (CUT)	4,979 C.Y.
EMBANKMENT (FILL)	18,944 C.Y.

GRADING QUANTITIES ARE SHOWN FOR PERMIT PURPOSES ONLY. THE CONTRACTOR IS RESPONSIBLE FOR CALCULATING HIS OWN EARTHWORK QUANTITIES FOR BIDDING PURPOSES.

PLANS PREPARED BY:
Blair, Church & Flynn
CONSULTING ENGINEERS
451 Clovis Avenue, Suite 200
Clovis, California 93612
Tel (559) 326-1400
Fax (559) 326-1500

REGISTERED PROFESSIONAL ENGINEER · PAIGE E. NOSA · No. 78,395 · CIVIL · STATE OF CALIFORNIA

12/3/2021
Date Signed:

NO.	REVISIONS	DATE	SAP WO	SUPV	APPROVED	ENGR	CK'D	MADE	P.E.
1	ADDENDUM #1	03-19-2021				PN	PN	JR	PN
2	ENVIRONMENTAL HEALTH PLAN CHECK REVISIONS	06-18-2021				PN	PN	JR	PN
3	ADDENDUM #2	12-03-2021				PN	PN	JR	PN
4	ADDENDUM #3	02-18-2022				PN	PN	JR	PN

REFERENCE DRAWINGS | REFERENCE DRAWINGS

LOCATION: BISHOP, CALIFORNIA

BISHOP SERVICE CENTER
SITE DEVELOPEMENT
GRADING AND DRAINAGE PLAN

SOUTHERN CALIFORNIA EDISON — An EDISON INTERNATIONAL Company

VOLUME 1

SHEET NO. C2.3a

SCALE: AS NOTED

18 OF 66 SHTS.

100% CONSTRUCTION DOCUMENTS (12-03-2021)

Drawing: P:\219-0301\Site\productiondrawings\01 - Site\219301_C2.0a_Grading And Drainage Plan.dwg; C2.3a Grading and Drainage Plan - BCF.ctb
Plot by: jredelfs Feb 23, 2022 - 7:31pm

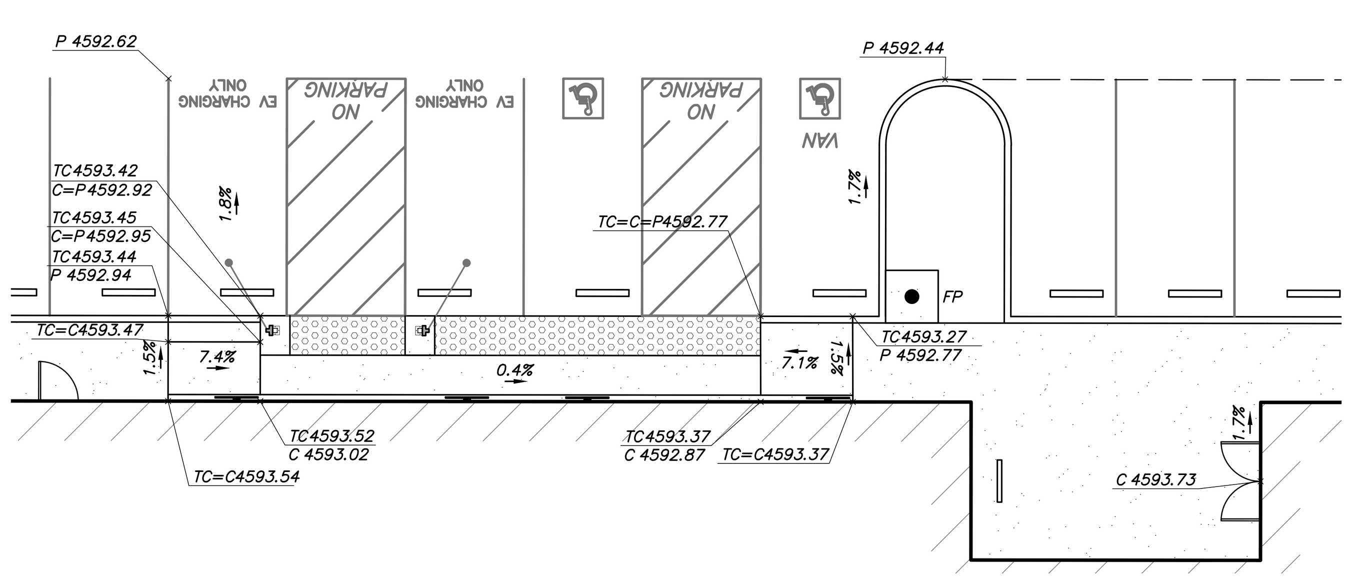

A / C2.4a ADA PARKING STALLS
NOT TO SCALE

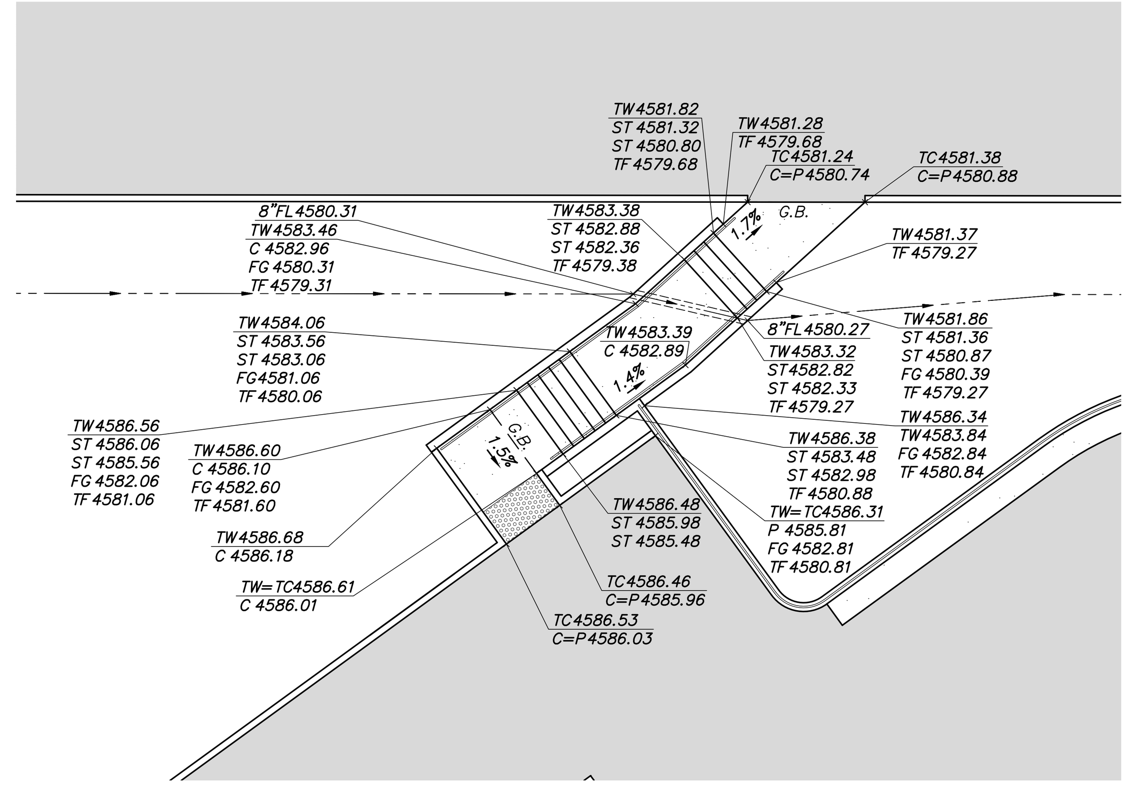

B / C2.4a STAIR ENLARGEMENT
NOT TO SCALE

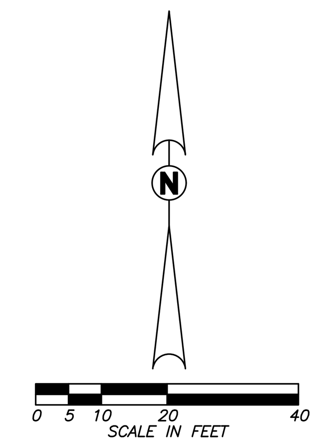

CONSTRUCTION LEGEND:

SW	EARTHEN SWALE (5' WIDE) PER DETAIL M/C6.0a
TG	PERFORM TRANSITION GRADING
DC	PROVIDE 8" DUCTILE IRON CULVERT
BA	BASIN INLET/OUTLET PER DETAIL D/C2.4a
FE	FURNISH AND INSTALL TYPE A FLARE END SECTION PER DETAIL F/C6.5a

GRADING AND DRAINAGE LEGEND:

C	CONCRETE
CR	CRUSHED ROCK
EG	EXISTING GRADE
FF	FINISHED FLOOR
FG	FINISHED GRADE
FL	FLOWLINE
G	GUTTER
GR	GRATE
GRA	GRAVEL
GU	GUNITE
L	GUTTER LIP
MS	MOW STRIP
P	PAVEMENT
SWL	SWALE
TC	TOP OF CURB
TW	TOP OF WALL
VG	VALLEY GUTTER
VGFL	VALLEY GUTTER FLOWLINE
(FG4583.90)	EXISTING ELEVATION
FG4583.90	PROPOSED ELEVATION
2.9%	DIRECTION OF DRAINAGE
S=0.0050	FLOWLINE SLOPE
	U-36 STORM DRAIN INLET PER DETAIL E/C6.4a
	OMPI DRAIN INLET PER DETAIL F/C6.4a
● CO	SURFACE CLEANOUT PER DETAIL G/C6.4a
8"SD	FURNISH AND INSTALL PVC SDR-35 OR N-12 WT IB STORM DRAIN PIPELINE, SEE PLANS, SIZE AS NOTED. TRENCH PER DETAIL D/C6.4a
	STORM DRAIN MANHOLE PER DETAIL I/C6.6a
	DIRECTION OF FLOW
G.B.	GRADE BREAK
	LIMITS OF RIP-RAP IMPROVEMENTS PER DETAIL F/C6.7a
	LIMITS OF OVER EXCAVATION FOR FUTURE BUILDING. REFER TO SOILS REPORT. DEPTH OF OVER EXCAVATION TO BE A MINIMUM OF 24" BELOW EXISTING GRADE. (SHOWN FOR REFERENCE, CONSTRUCTED DURING PHASE 1)
4585	PROPOSED MAJOR CONTOUR LINE
	PROPOSED MINOR CONTOUR LINE

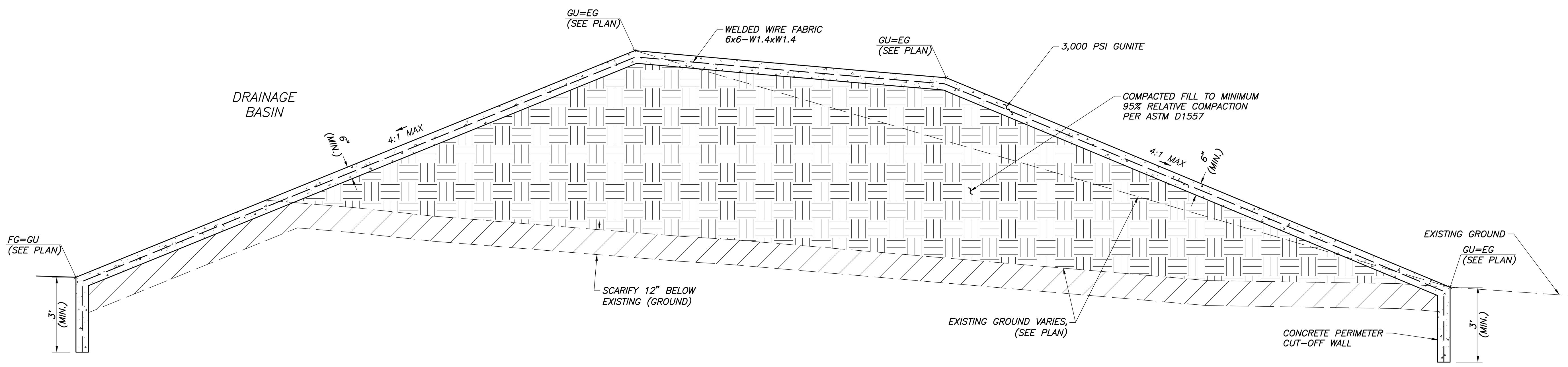

C / C2.4a DRAINAGE BASIN CROSS SECTION
NOT TO SCALE

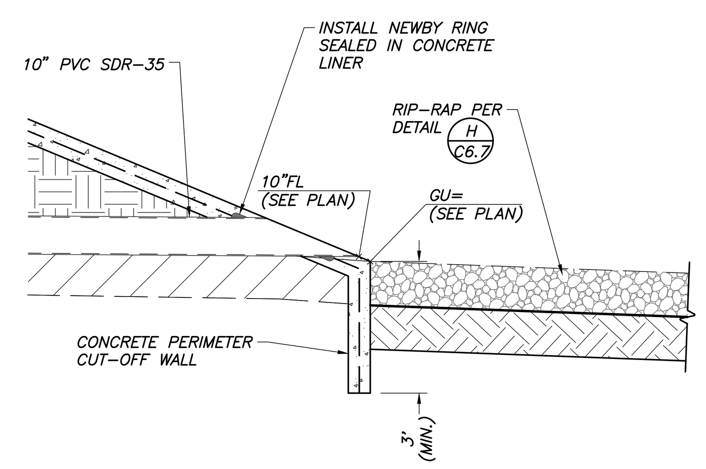

D / C2.4a BASIN INLET/OUTLET
NOT TO SCALE

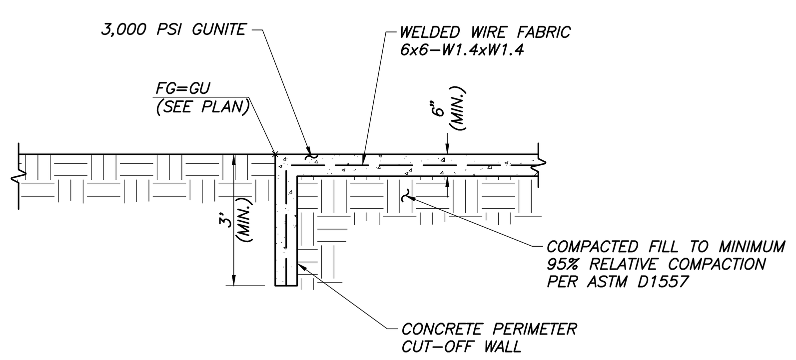

E / C2.4a CROSS SECTION
NOT TO SCALE

GRADING AND DRAINAGE NOTES:

THE REQUIREMENTS AND INFORMATION SET OUT BELOW ARE PROVIDED FOR THE CONTRACTOR'S CONVENIENCE AND DO NOT ENCOMPASS ALL PROJECT REQUIREMENTS DESCRIBED BY THE PROJECT PLANS AND SPECIFICATIONS AND/OR APPLICABLE LAWS, REGULATIONS AND/OR BUILDING CODES.

1. CONSTRUCTION OF ALL PROJECT SITE IMPROVEMENTS SUBJECT TO ADA ACCESS COMPLIANCE, INCLUDING ACCESSIBLE PATH OF TRAVEL, CURB RETURNS, PARKING STALL(S) AND UNLOADING AREAS, BARRIER FREE AMENITIES AND/OR OTHER APPLICABLE SITE IMPROVEMENTS SHALL CONFORM TO THE AMERICANS WITH DISABILITIES ACT, CALIFORNIA TITLE 24, AND THE CALIFORNIA BUILDING CODE, CURRENT EDITION(S).
2. CONTRACTOR SHALL FIELD VERIFY ALL GRADES AND SLOPES PRIOR TO THE PLACEMENT OF CONCRETE AND/OR PAVEMENT FOR CONFORMANCE WITH ADA ACCESS COMPLIANCE REQUIREMENTS. EXAMPLES OF MINIMUM AND MAXIMUM LIMITS RELATED TO ADA ACCESS COMPLIANCE INCLUDE, BUT ARE NOT LIMITED TO:
   a) ACCESSIBLE PATH OF TRAVEL CROSS-SLOPE SHALL NOT EXCEED 2.00%
   b) ACCESSIBLE PATH OF TRAVEL LONGITUDINAL SLOPES SHALL NOT EXCEED 5.00%
   c) RAMP LONGITUDINAL SLOPES SHALL NOT EXCEED 8.33%
   d) WALKS SHALL NOT HAVE LESS THAN 48 INCHES OF UNOBSTRUCTED WIDTH
3. CONTRACTOR MUST IMMEDIATELY NOTIFY THE ENGINEER OF RECORD, IDENTIFIED BY THE PROFESSIONAL ENGINEERING SEAL AND SIGNATURE ON THESE PLANS, OF ANY SITE CONDITION(S) AND/OR DESIGN INFORMATION THAT PREVENTS THE CONTRACTOR FROM COMPLYING WITH THE LAWS, REGULATIONS AND/OR BUILDING CODES GOVERNING ADA ACCESS COMPLIANCE.
4. GROUND SLOPES AWAY FROM BUILDING PADS IN LANDSCAPED OR DIRT AREAS SHALL BE NO LESS THAN 5.0% FOR AT LEAST TEN (10) FEET, OR AS OTHERWISE NOTED ON THE PLANS.
5. DRAINAGE SHALL NOT BE ALLOWED ONTO ADJACENT PROPERTY.
6. ALL FILL MATERIAL USED TO SUPPORT THE FOUNDATIONS OF ANY BUILDING OR STRUCTURE SHALL BE PLACED UNDER THE DIRECTION OF A LICENSED GEOTECHNICAL ENGINEER, AND IN COMPLIANCE WITH THE PROJECT SPECIFICATIONS. A SOILS COMPACTION REPORT SHALL BE SUBMITTED TO THE ENGINEER OF RECORD AS REQUIRED BY THE PROJECT SPECIFICATIONS.
7. AS A FIRST ORDER OF WORK, THE CONTRACTOR SHALL POTHOLE THE EXISTING UTILITY LINES AT THE POINT OF CONNECTION TO VERIFY THE LOCATION, SIZE, PIPE MATERIAL AND ELEVATION SO THAT THE ENGINEER CAN MAKE ELEVATION AND/OR ALIGNMENT ADJUSTMENTS IF NECESSARY.
8. FURNISH AND INSTALL CALTRANS DROP INLET TYPE OMPI PER 2010 CALTRANS STANDARD PLAN D75A WITH TYPE 36R GRATE PER 2010 CALTRANS STANDARD PLAN D77B. ADD TRASH RACK PER 2010 CALTRANS STANDARD PLAN D75C.

ESTIMATED GRADING QUANTITIES:

EXCAVATION (CUT)	4,979 C.Y.
EMBANKMENT (FILL)	18,944 C.Y.

GRADING QUANTITIES ARE SHOWN FOR PERMIT PURPOSES ONLY. THE CONTRACTOR IS RESPONSIBLE FOR CALCULATING HIS OWN EARTHWORK QUANTITIES FOR BIDDING PURPOSES.

REGISTERED PROFESSIONAL ENGINEER PAIGE E. NOGA No. 78,395 CIVIL STATE OF CALIFORNIA
12/3/2021
Date Signed:

PLANS PREPARED BY:
Blair, Church & Flynn
CONSULTING ENGINEERS
451 Clovis Avenue, Suite 200
Clovis, California 93612
Tel (559) 326-1400
Fax (559) 326-1500

NO.	REVISIONS	DATE	SAP WO	SUPV	APPROVED	ENGR	CK'D	MADE	P.E.
1	ADDENDUM #1	03-19-2021				PN	PN	JR	PN
2	ENVIRONMENTAL HEALTH PLAN CHECK REVISIONS	06-18-2021				PN	PN	JR	PN
3	ADDENDUM #2	12-03-2021				PN	PN	JR	PN
4	ADDENDUM #3	02-18-2022				PN	PN	JR	PN

REFERENCE DRAWINGS | REFERENCE DRAWINGS

LOCATION: BISHOP, CALIFORNIA

BISHOP SERVICE CENTER
SITE DEVELOPEMENT
GRADING AND DRAINAGE PLAN
VOLUME 1

SOUTHERN CALIFORNIA EDISON An EDISON INTERNATIONAL Company

SHEET NO. C2.4a
SCALE: AS NOTED
19 OF 66 SHTS.

100% CONSTRUCTION DOCUMENTS (12-03-2021)

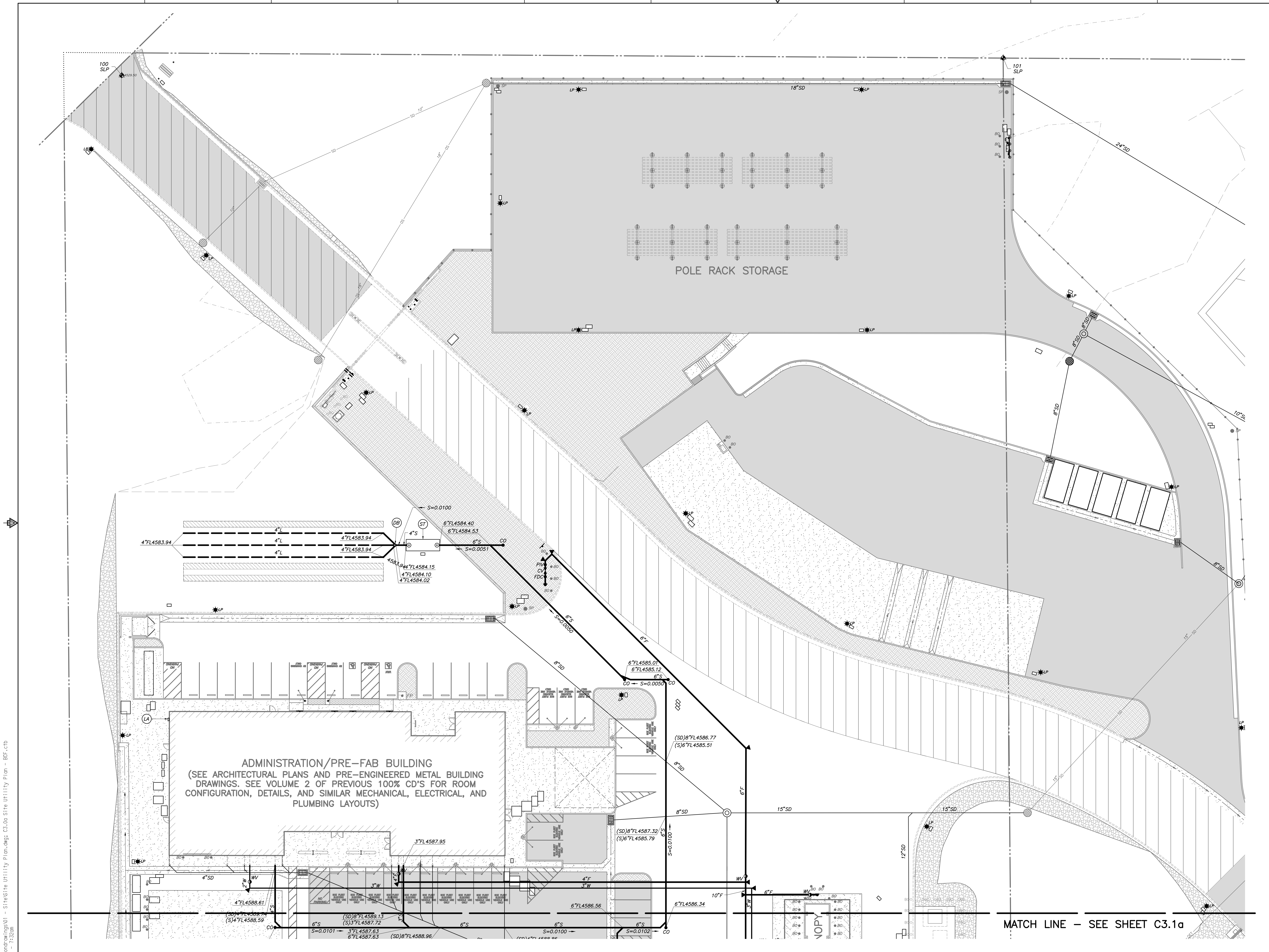

UTILITY LEGEND:

(DB)	DISTRIBUTION BOX PER DETAIL C/C6.4a
(ET)	FURNISH AND INSTALL WASTEWATER EVAPORATOR BY EMC (EQUIPMENT MANUFACTURING CORPORATION) WATER EATER MODEL 125E 125 GALLON WASTEWATER EVAPORATING TANK WITH AUTO FILL SYSTEM PER MANUFACTURER'S SPECIFICATIONS. SEE DETAIL A/C6.10a
(FP)	PACKAGED FIRE BOOSTER PUMP BUILDING PER DETAIL A/C5.2a
(HT)	3,000 GALLON HOLDING TANK PER DETAIL B/C6.10a
(LA)	SEPTIC AND HOLDING TANK LIQUID LEVEL ALARM TO BE INSTALLED 40" ABOVE GRADE, (SEE ELECTRICAL PLANS)
(SP)	4'x3' SUMP PIT (SEE ARCHITECTURAL PLANS)
(ST)	3,000 GALLON SEPTIC TANK PER DETAIL A/C6.4a
(WL)	RAW WATER LINE
(WT)	228,020 GALLON FIRE WATER STORAGE TANK PER DETAIL A/C5.0a
	FIRE HYDRANT PER CITY OF BISHOP STANDARD DRAWING W-1. CONTRACTOR TO INSTALL 4" STORZ WITH CAP AS PUMP NOZZLE.
	SEWER MANHOLE PER DETAIL H/C6.5a
	STORM DRAIN INLET, SEE GRADING AND DRAINAGE PLAN
	CONCRETE TRUST BLOCK PER DETAIL J/C6.4a
BO	BOLLARD PER DETAIL K/C6.0a
CO	SURFACE CLEANOUT PER DETAIL G/C6.4a
CV	CHECK VALVE PER DETAIL I/C6.4a
FDC	FIRE DEPARTMENT CONNECTION PER DETAIL I/C6.4a
PIV	POST INDICATOR VALVE PER DETAIL I/C6.4a
WV	GATE VALVE IN BOX PER DETAIL H/C6.4a
2"IRR	PVC C900 DR18 IRRIGATION LINE. SIZE AS NOTED. MINIMUM 36" COVER. TRENCH PER DETAIL D/C6.4a
4"L	LEACH LINE TRENCH PER DETAIL B/C6.4a
10"F	PVC C900 DR 14 FIRE LINE AND FITTINGS, MIN. 36" COVER. SIZE AS NOTED. TRENCH PER DETAIL D/C6.4a
6"S	PVC SDR-35 SEWER LINE SIZE AS NOTED. TRENCH PER DETAIL D/C6.4a
8"SD	STORM DRAIN PIPELINE, SEE GRADING AND DRAINAGE PLAN
3"W	PVC C900 DR 18 WATER LINE AND FITTINGS, MIN. 36" COVER. SIZE AS NOTED. TRENCH PER DETAIL D/C6.4a
S=0.0050 →	FLOWLINE OF SEWER PIPE
P.O.C	POINT OF CONNECTION AT 5' OUTSIDE OF BUILDING.
	100% LEACHFIELD EXPANSION AREA

UTILITY NOTES:

1. AS THE FIRST ORDER OF WORK THE CONTRACTOR SHALL POTHOLE TO VERIFY THE LOCATION OF EXISTING UTILITIES. NOTIFY THE ENGINEER OF DISCREPANCIES.
2. UTILITY INFORMATION SHOWN HEREON IS BASED ON RECORD INFORMATION SUPPLIED TO THE ENGINEER. THE ENGINEER CAN MAKE NO GUARANTEES AS TO THE ACCURACY OR COMPLETENESS OF THE UTILITY FACILITIES SHOWN. PRIOR TO ANY SITE EXCAVATIONS, THE CONTRACTOR SHALL CONTACT PUBLIC WORKS OFFICIALS AND REQUEST THAT THEY IDENTIFY THE LOCATION OF ALL UNDERGROUND UTILITIES AT THE SITE.
3. CONTRACTOR SHALL CONSTRUCT CONCRETE THRUST BLOCKS AT ALL TEES, ANGLE POINTS AND VALVES. PER DETAIL J/C6.4a
4. CONTRACTOR SHALL BE RESPONSIBLE TO CONSTRUCT ALL UTILITIES STARTING 5' OUTSIDE BUILDING ENVELOPE.
5. CONTRACTOR SHALL INITIALLY OPERATE ALL FIRE HYDRANTS, VALVES AND OTHER APPURTENANCES TO DEMONSTRATE ALL ARE IN PROPER OPERATING CONDITION BEFORE THE WORK WILL BE ACCEPTED. ALL NORMALLY OPEN VALVES SHALL BE LEFT OPEN AND NORMALLY CLOSED VALVES SHALL BE LEFT CLOSED. AN AFFIDAVIT OF COMPLIANCE SHALL BE REQUIRED BY THE ENGINEER OF WORK AND DELIVERED BY HIM TO THE CITY OR CONCERNED UTILITY COMPANY.
6. CONTRACTOR SHALL COORDINATE THE INSTALLATION OF SEWER MANHOLES WITH THE COUNTY PUBLIC WORKS.
7. RAW WATER PIPE MATERIAL OPTIONS:
   - 7.a. PVC C900 DR18
   - 7.b. HDPE DR 11
8. ALL DOMESTIC WATER AND FIRE LINES ARE DESIGNED TO BE FULLY RESTRAINED.
9. ALL FIRE , WATER, SEWER, AND STORM DRAIN CROSSINGS WITH DOMESTIC WATER TO INSTALLED PER DETAIL J/C6.6a

PLANS PREPARED BY:
Blair, Church & Flynn
CONSULTING ENGINEERS
451 Clovis Avenue, Suite 200
Clovis, California 93612
Tel (559) 326-1400
Fax (559) 326-1500

REGISTERED PROFESSIONAL ENGINEER PAIGE E. NOGA No. 78,395 CIVIL STATE OF CALIFORNIA
12/3/2021
Date Signed:

NO.	REVISIONS	DATE	SAP WO	SUPV	APPROVED	ENGR	CK'D	MADE	P.E.
1	ADDENDUM #1	03-19-2021				PN	PN	JR	PN
2	ENVIRONMENTAL HEALTH PLAN CHECK REVISIONS	06-18-2021				PN	PN	JR	PN
3	ADDENDUM #2	12-03-2021				PN	PN	JR	PN
4	ADDENDUM #3	02-18-2022				PN	PN	JR	PN

REFERENCE DRAWINGS	REFERENCE DRAWINGS	NO.	REVISIONS	DATE	SAP WO	SUPV	APPROVED	ENGR	CK'D	MADE	P.E.

LOCATION: BISHOP, CALIFORNIA

BISHOP SERVICE CENTER
SITE DEVELOPEMENT
SITE UTILITY PLAN

VOLUME 1

SOUTHERN CALIFORNIA EDISON — An EDISON INTERNATIONAL Company

SHEET NO. C3.0a
SCALE: AS NOTED
20 OF 66 SHTS.

100% CONSTRUCTION DOCUMENTS (12-03-2021)

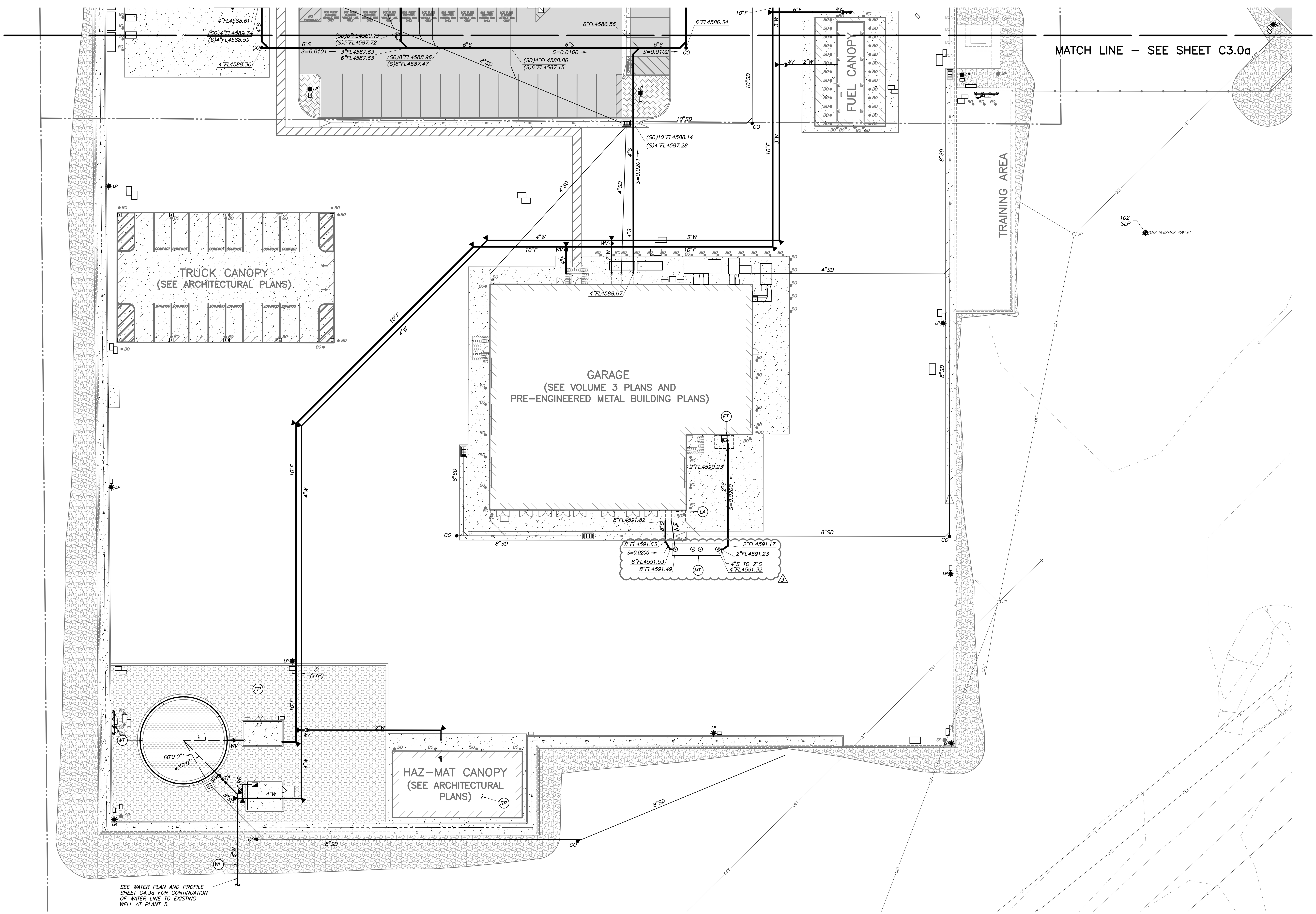

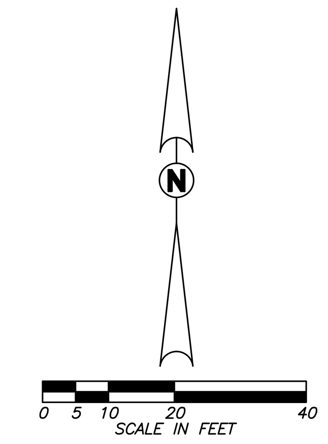

UTILITY LEGEND:

- (DB) DISTRIBUTION BOX PER DETAIL C/C6.4a
- (ET) FURNISH AND INSTALL WASTEWATER EVAPORATOR BY EMC (EQUIPMENT MANUFACTURING CORPORATION) WATER EATER MODEL 125E 125 GALLON WASTEWATER EVAPORATING TANK WITH AUTO FILL SYSTEM PER MANUFACTURER'S SPECIFICATIONS. SEE DETAIL A/C6.10a
- (FP) PACKAGED FIRE BOOSTER PUMP BUILDING PER DETAIL A/C5.2a
- (HT) 3,000 GALLON HOLDING TANK PER DETAIL B/C6.10a
- (LA) SEPTIC AND HOLDING TANK LIQUID LEVEL ALARM TO BE INSTALLED 40" ABOVE GRADE, (SEE ELECTRICAL PLANS)
- (SP) 4'x3' SUMP PIT (SEE ARCHITECTURAL PLANS)
- (ST) 3,000 GALLON SEPTIC TANK PER DETAIL A/C6.4a
- (WL) RAW WATER LINE
- (WT) 228,020 GALLON FIRE WATER STORAGE TANK PER DETAIL A/C5.0a
- FIRE HYDRANT PER CITY OF BISHOP STANDARD DRAWING W-1. CONTRACTOR TO INSTALL 4" STORZ WITH CAP AS PUMP NOZZLE.
- SEWER MANHOLE PER DETAIL H/C6.5a
- STORM DRAIN INLET, SEE GRADING AND DRAINAGE PLAN
- CONCRETE TRUST BLOCK PER DETAIL J/C6.4a
- BO — BOLLARD PER DETAIL K/C6.0a
- CO — SURFACE CLEANOUT PER DETAIL G/C6.4a
- CV — CHECK VALVE PER DETAIL I/C6.4a
- FDC — FIRE DEPARTMENT CONNECTION PER DETAIL I/C6.4a
- PIV — POST INDICATOR VALVE PER DETAIL I/C6.4a
- WV — GATE VALVE IN BOX PER DETAIL H/C6.4a
- 2"IRR — PVC C900 DR18 IRRIGATION LINE. SIZE AS NOTED. MINIMUM 36" COVER. TRENCH PER DETAIL D/C6.4a
- 4"L — LEACH LINE TRENCH PER DETAIL B/C6.4a
- 10"F — PVC C900 DR 14 FIRE LINE AND FITTINGS, MIN. 36" COVER. SIZE AS NOTED. TRENCH PER DETAIL D/C6.4a
- 6"S — PVC SDR-35 SEWER LINE SIZE AS NOTED. TRENCH PER DETAIL D/C6.4a
- 8"SD — STORM DRAIN PIPELINE, SEE GRADING AND DRAINAGE PLAN
- 3"W — PVC C900 DR 18 WATER LINE AND FITTINGS, MIN. 36" COVER. SIZE AS NOTED. TRENCH PER DETAIL D/C6.4a
- S=0.0050 — FLOWLINE OF SEWER PIPE
- P.O.C — POINT OF CONNECTION AT 5' OUTSIDE OF BUILDING.
- 100% LEACHFIELD EXPANSION AREA

UTILITY NOTES:

1. AS THE FIRST ORDER OF WORK THE CONTRACTOR SHALL POTHOLE TO VERIFY THE LOCATION OF EXISTING UTILITIES. NOTIFY THE ENGINEER OF DISCREPANCIES.
2. UTILITY INFORMATION SHOWN HEREON IS BASED ON RECORD INFORMATION SUPPLIED TO THE ENGINEER. THE ENGINEER CAN MAKE NO GUARANTEES AS TO THE ACCURACY OR COMPLETENESS OF THE UTILITY FACILITIES SHOWN. PRIOR TO ANY SITE EXCAVATIONS, THE CONTRACTOR SHALL CONTACT PUBLIC WORKS OFFICIALS AND REQUEST THAT THEY IDENTIFY THE LOCATION OF ALL UNDERGROUND UTILITIES AT THE SITE.
3. CONTRACTOR SHALL CONSTRUCT CONCRETE THRUST BLOCKS AT ALL TEES, ANGLE POINTS AND VALVES. PER DETAIL J/C6.4a
4. CONTRACTOR SHALL BE RESPONSIBLE TO CONSTRUCT ALL UTILITIES STARTING 5' OUTSIDE BUILDING ENVELOPE.
5. CONTRACTOR SHALL INITIALLY OPERATE ALL FIRE HYDRANTS, VALVES AND OTHER APPURTENANCES TO DEMONSTRATE ALL ARE IN PROPER OPERATING CONDITION BEFORE THE WORK WILL BE ACCEPTED. ALL NORMALLY OPEN VALVES SHALL BE LEFT OPEN AND NORMALLY CLOSED VALVES SHALL BE LEFT CLOSED. AN AFFIDAVIT OF COMPLIANCE SHALL BE REQUIRED BY THE ENGINEER OF WORK AND DELIVERED BY HIM TO THE CITY OR CONCERNED UTILITY COMPANY.
6. CONTRACTOR SHALL COORDINATE THE INSTALLATION OF SEWER MANHOLES WITH THE COUNTY PUBLIC WORKS.
7. RAW WATER PIPE MATERIAL OPTIONS:
   7.a. PVC C900 DR18
   7.b. HDPE DR 11
8. ALL DOMESTIC WATER AND FIRE LINES ARE DESIGNED TO BE FULLY RESTRAINED.
9. ALL FIRE , WATER, SEWER, AND STORM DRAIN CROSSINGS WITH DOMESTIC WATER TO INSTALLED PER DETAIL J/C6.6a

PLANS PREPARED BY:
Blair, Church & Flynn
CONSULTING ENGINEERS
451 Clovis Avenue, Suite 200
Clovis, California 93612
Tel (559) 326-1400
Fax (559) 326-1500

REGISTERED PROFESSIONAL ENGINEER PAIGE E. NOGA No. 78,395 CIVIL STATE OF CALIFORNIA
12/3/2021
Date Signed:

NO.	REVISIONS	DATE	SAP WO	SUPV	APPROVED	ENGR	CK'D	MADE	P.E.
1	ADDENDUM #1	03-19-2021				PN	PN	JR	PN
2	ENVIRONMENTAL HEALTH PLAN CHECK REVISIONS	06-18-2021				PN	PN	JR	PN
3	ADDENDUM #2	12-03-2021				PN	PN	JR	PN
4	ADDENDUM #3	02-18-2022				PN	PN	JR	PN

REFERENCE DRAWINGS | REFERENCE DRAWINGS

LOCATION: BISHOP, CALIFORNIA

BISHOP SERVICE CENTER
SITE DEVELOPEMENT
SITE UTILITY PLAN

VOLUME 1

SOUTHERN CALIFORNIA EDISON An EDISON INTERNATIONAL Company

SHEET NO. C3.1a

SCALE: AS NOTED

21 OF 66 SHTS.

100% CONSTRUCTION DOCUMENTS (12-03-2021)

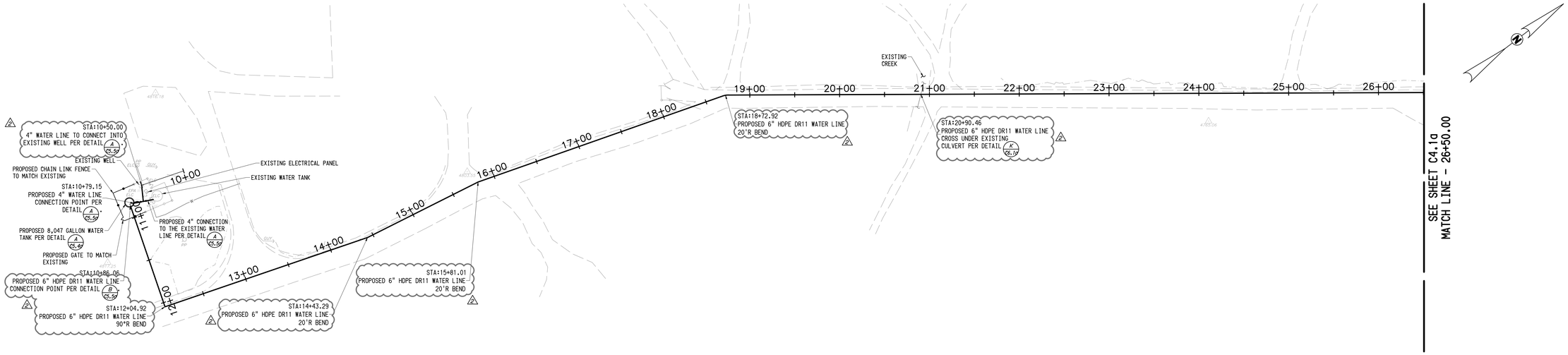

PLANT 6 ROAD

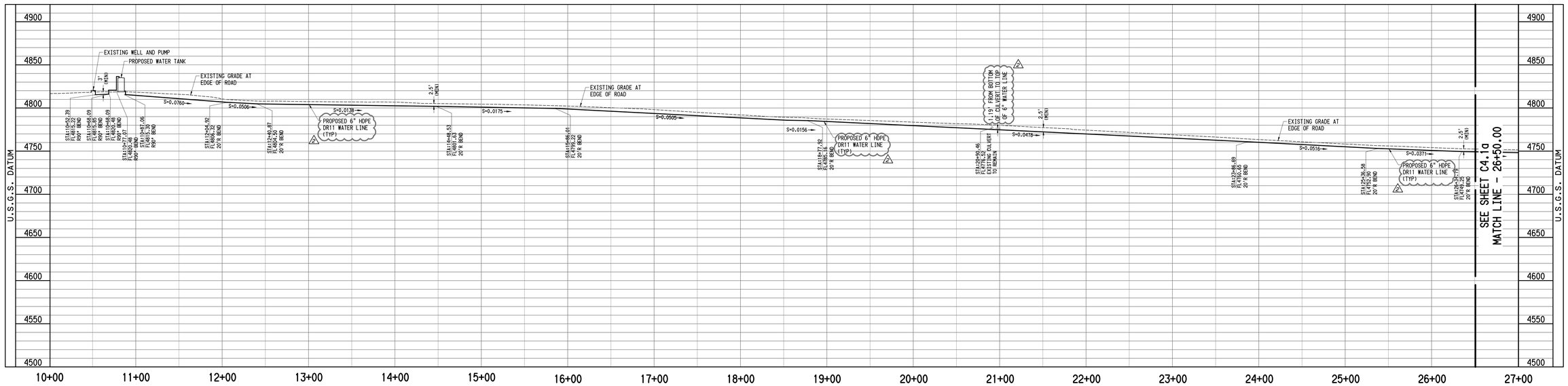

SCALE: HORIZ 1"=50'
VERT 1"=50'
0 10 25 50 75 100
SCALE IN FEET

REGISTERED PROFESSIONAL ENGINEER
PAIGE E. NOACK
No. 78,395
CIVIL
STATE OF CALIFORNIA
12/3/2021
Date Signed:

PLANS PREPARED BY:
Blair, Church & Flynn
CONSULTING ENGINEERS
4551 Clovis Avenue, Suite 200
Clovis, California 93612
Tel (559) 326-5400
Fax (559) 326-1900

NO.	REVISIONS	DATE	SAP WO	SUPV	APPROVED	ENGR	CK'D	MADE	P.E.
1	ADDENDUM #1	03-19-2021				PN	PN	JR	PN
2	ENVIRONMENTAL HEALTH PLAN CHECK REVISIONS	06-18-2021				PN	PN	JR	PN
3	ADDENDUM #2	12-03-2021				PN	PN	JR	PN
4	ADDENDUM #3	02-18-2022				PN	PN	JR	PN

REFERENCE DRAWINGS | REFERENCE DRAWINGS | NO. | REVISIONS | DATE | SAP WO | SUPV | APPROVED | ENGR | CK'D | MADE | P.E.

LOCATION: BISHOP, CALIFORNIA

BISHOP SERVICE CENTER
SITE DEVELOPEMENT
WATER PLAN AND PROFILE

VOLUME 1

SOUTHERN CALIFORNIA EDISON
An EDISON INTERNATIONAL Company

SHEET NO.
C4.0a
SCALE: AS NOTED
22 OF 66 SHTS.

100% CONSTRUCTION DOCUMENTS (12-03-2021)

SOUTHERN CALIFORNIA EDISON
2012 - 5 SIZE

Drawing: P:\219-0301\Site\Production\Drawings\01 - Site\Water Plan & Profile.dwg; C4.0a Water Plan and Profile - BCF.ctb
Plotted by: jrosales Feb 22, 2022 - 7:30am

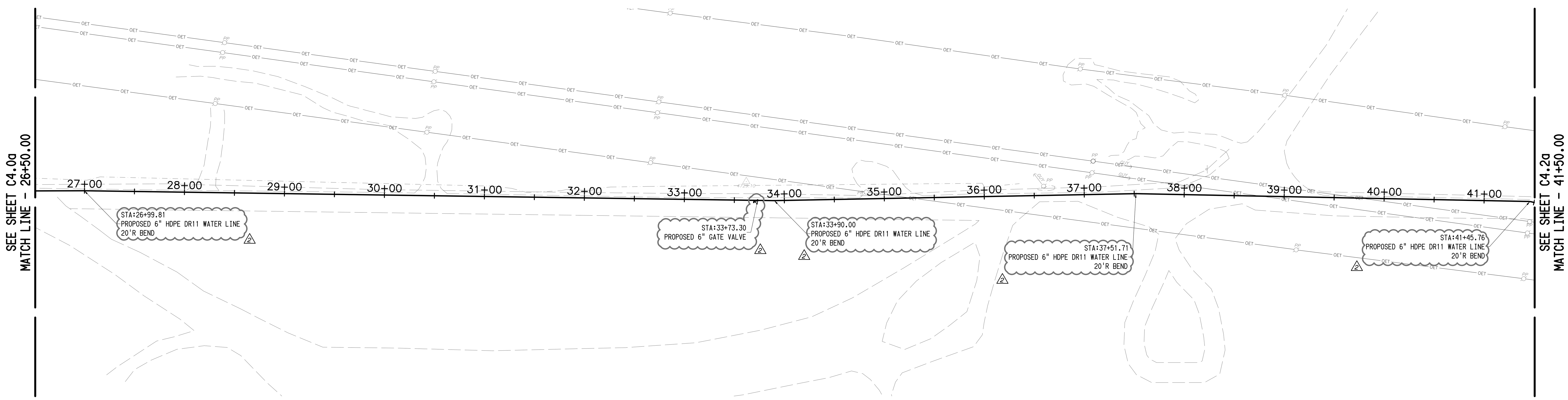

PLANT 6 ROAD

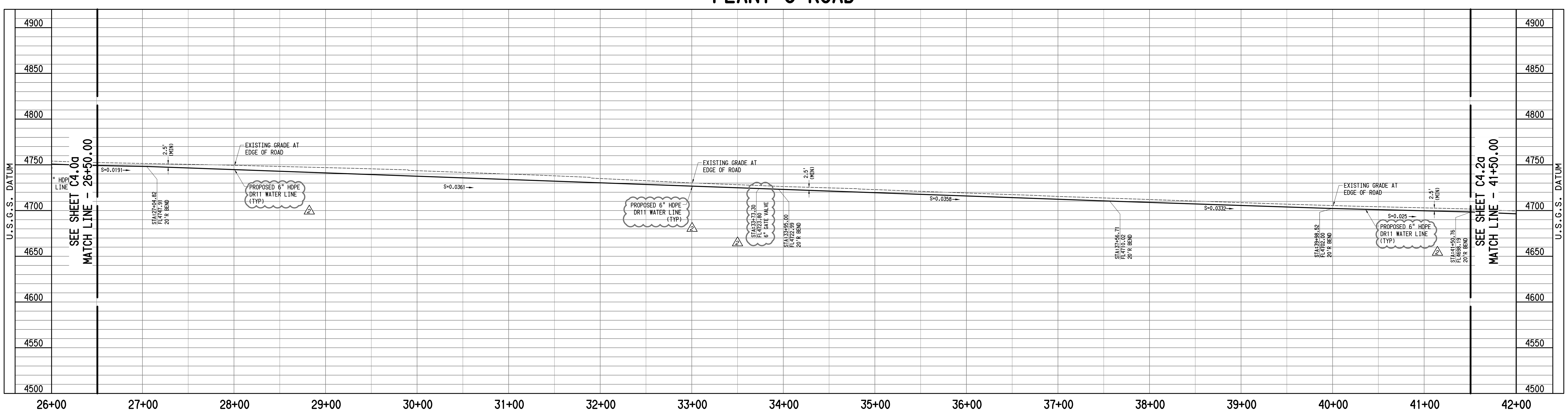

SCALE: HORIZ 1"=50'
VERT 1"=50'

0 10 25 50 75 100
SCALE IN FEET

REGISTERED PROFESSIONAL ENGINEER
PAIGE E. NOGA
No. 78,395
CIVIL
STATE OF CALIFORNIA

12/3/2021
Date Signed:

PLANS PREPARED BY:
Blair, Church & Flynn
CONSULTING ENGINEERS
451 Clovis Avenue, Suite 200
Clovis, California 93612
Tel (559) 326-1400
Fax (559) 326-1500

NO.	REVISIONS	DATE	SAP WO	SUPV	APPROVED	ENGR	CK'D	MADE	P.E.
1	ADDENDUM #1	03-19-2021				PN	PN	JR	PN
2	ENVIRONMENTAL HEALTH PLAN CHECK REVISIONS	06-18-2021				PN	PN	JR	PN
3	ADDENDUM #2	12-03-2021				PN	PN	JR	PN
4	ADDENDUM #3	02-18-2022				PN	PN	JR	PN

REFERENCE DRAWINGS | REFERENCE DRAWINGS

LOCATION: BISHOP, CALIFORNIA

BISHOP SERVICE CENTER
SITE DEVELOPEMENT
WATER PLAN AND PROFILE

SOUTHERN CALIFORNIA EDISON — An EDISON INTERNATIONAL Company

VOLUME 1

SHEET NO. C4.1a

SCALE: AS NOTED

23 OF 66 SHTS.

100% CONSTRUCTION DOCUMENTS (12-03-2021)

SOUTHERN CALIFORNIA EDISON
2012 - 5 SIZE

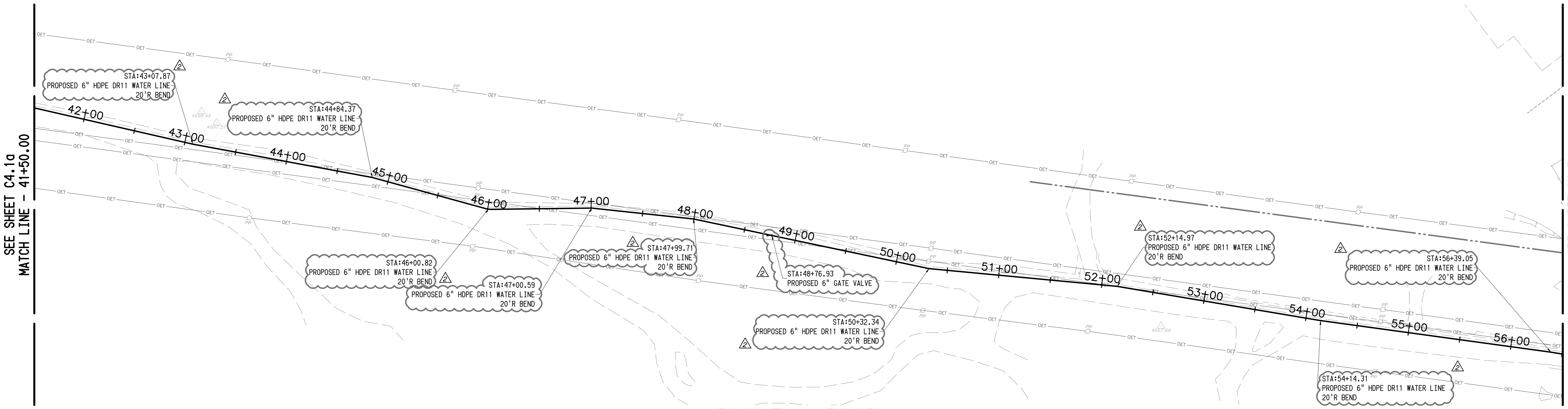

PLANT 6 ROAD

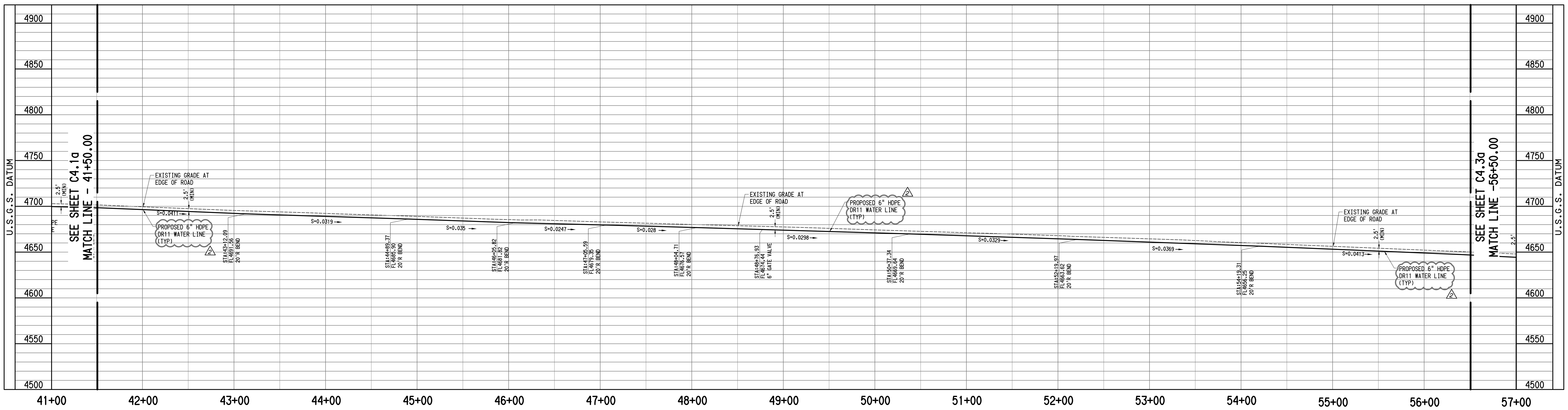

SCALE: HORIZ 1"=50'
VERT 1"=50'
0 10 25 50 75 100
SCALE IN FEET

PLANS PREPARED BY:
Blair, Church & Flynn
CONSULTING ENGINEERS
451 Clovis Avenue, Suite 200
Clovis, California 93612
Tel (559) 326-1400
Fax (559) 326-1500

REGISTERED PROFESSIONAL ENGINEER PAIGE E. NOLA No. 78,395 CIVIL STATE OF CALIFORNIA
12/3/2021
Date Signed:

NO.	REVISIONS	DATE	SAP WO	SUPV	APPROVED	ENGR	CK'D	MADE	P.E.
1	ADDENDUM #1	03-19-2021				PN	PN	JR	PN
2	ENVIRONMENTAL HEALTH PLAN CHECK REVISIONS	06-18-2021				PN	PN	JR	PN
3	ADDENDUM #2	12-03-2021				PN	PN	JR	PN
4	ADDENDUM #3	02-18-2022				PN	PN	JR	PN

REFERENCE DRAWINGS | REFERENCE DRAWINGS

LOCATION: BISHOP, CALIFORNIA

BISHOP SERVICE CENTER
SITE DEVELOPEMENT
WATER PLAN AND PROFILE

VOLUME 1

SOUTHERN CALIFORNIA EDISON — An EDISON INTERNATIONAL Company

SHEET NO. C4.2a

SCALE: AS NOTED

24 OF 66 SHTS.

100% CONSTRUCTION DOCUMENTS (12-03-2021)

Drawing: P:\219-0301\Site\production\drawings\01 - Site\Water Plan & Profile\dwg\ C4.2a Water Plan and Profile - BCF.ctb
Plot by: jrederis Feb 23, 2022 - 7:33pm

SOUTHERN CALIFORNIA EDISON
2012 - 5 SIZE

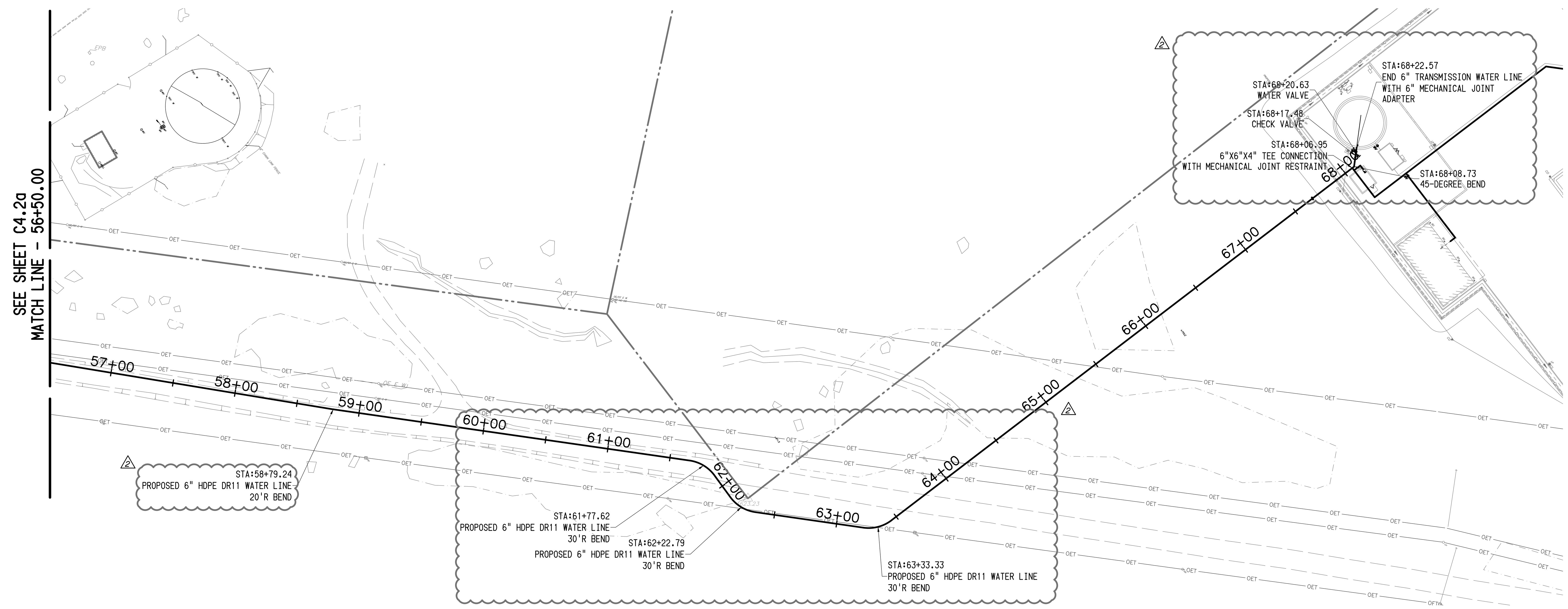

PLANT 6 ROAD

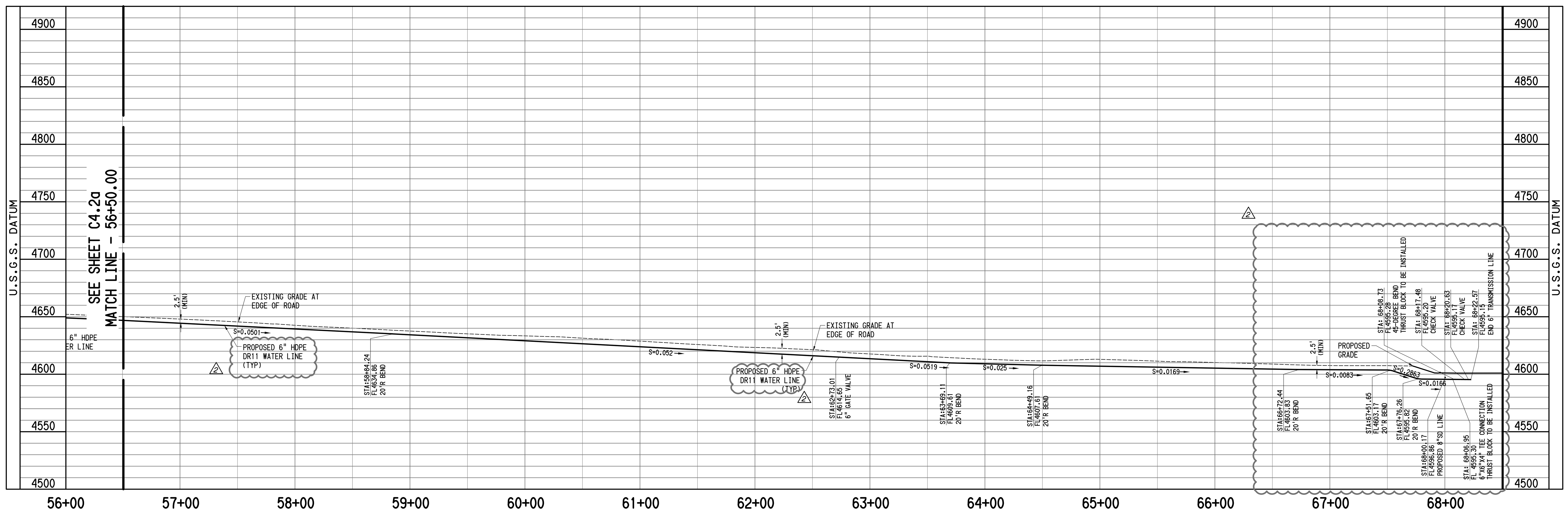

SCALE: HORIZ 1"=50'
VERT 1"=50'

0 10 25 50 75 100
SCALE IN FEET

REGISTERED PROFESSIONAL ENGINEER
PAIGE E. NOGA
No. 78,395
CIVIL
STATE OF CALIFORNIA
12/3/2021
Date Signed:

PLANS PREPARED BY:
Blair, Church & Flynn
CONSULTING ENGINEERS
451 Clovis Avenue, Suite 200
Clovis, California 93612
Tel (559) 326-1400
Fax (559) 326-1500

NO.	REVISIONS	DATE	SAP WO	SUPV	APPROVED	ENGR	CK'D	MADE	P.E.
1	ADDENDUM #1	03-19-2021				PN	PN	JR	PN
2	ENVIRONMENTAL HEALTH PLAN CHECK REVISIONS	06-18-2021				PN	PN	JR	PN
3	ADDENDUM #2	12-03-2021				PN	PN	JR	PN
4	ADDENDUM #3	02-18-2022				PN	PN	JR	PN

REFERENCE DRAWINGS	REFERENCE DRAWINGS	NO.	REVISIONS	DATE	SAP WO	SUPV	APPROVED	ENGR	CK'D	MADE	P.E.

LOCATION: BISHOP, CALIFORNIA

BISHOP SERVICE CENTER
SITE DEVELOPEMENT
WATER PLAN AND PROFILE

VOLUME 1

SOUTHERN CALIFORNIA EDISON — An EDISON INTERNATIONAL Company

SHEET NO. C4.3a

SCALE: AS NOTED

25 OF 66 SHTS.

100% CONSTRUCTION DOCUMENTS (12-03-2021)

SOUTHERN CALIFORNIA EDISON
2012 - S SIZE

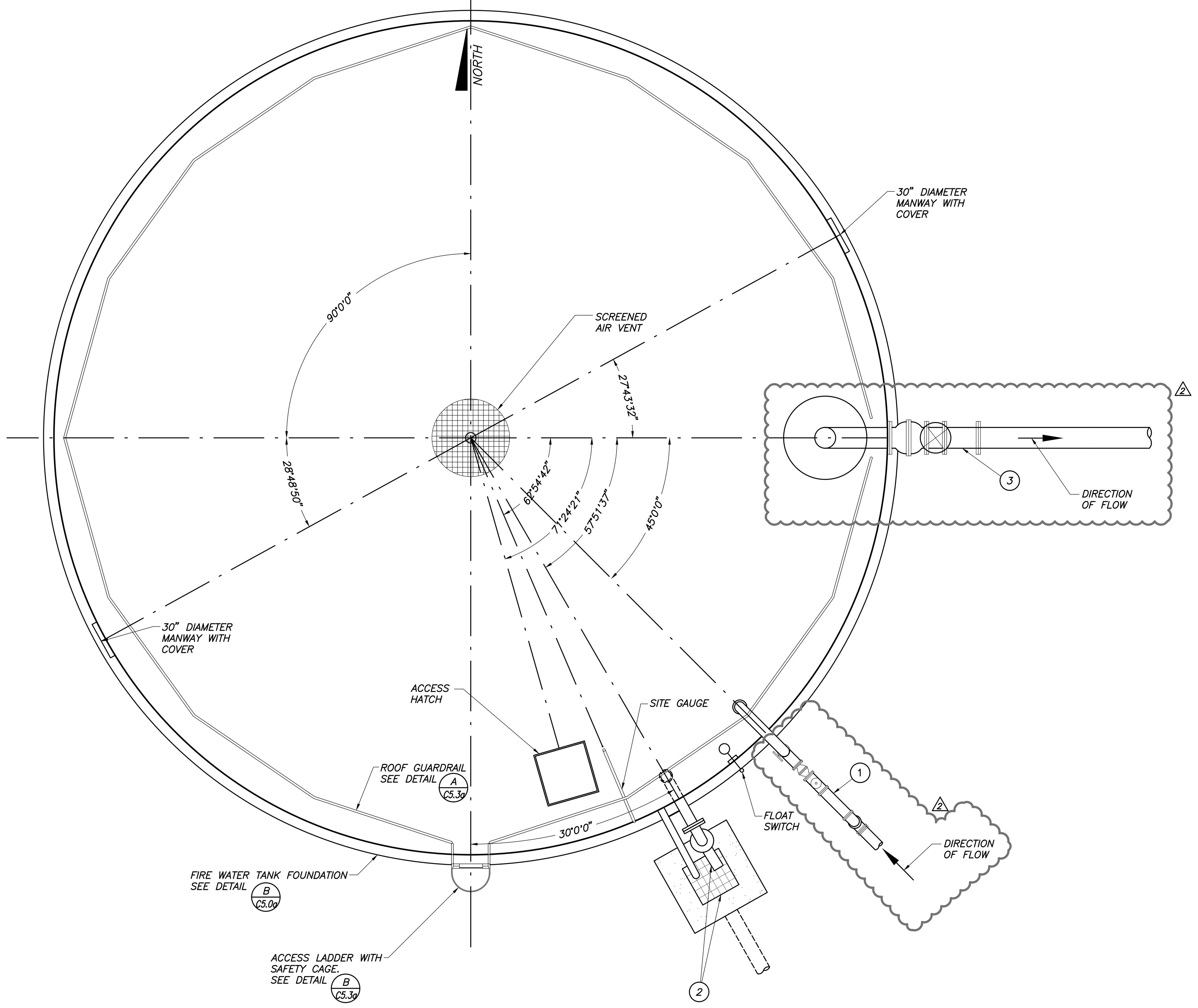

PLAN VIEW

SYMBOL LEGEND

1. TANK INLET PIPING AND MANIFOLDING, SEE DETAIL. B/C5.1a
2. OVERFLOW PIPING, MANIFOLDING AND DRAIN INLET, SEE DETAIL A/C5.1a
3. FIRE PUMP OUTLET PIPING AND MANIFOLDING, SEE DETAIL E/C5.1a
4. CENTER COLUMN AND FOOTING PER DETAIL J/C5.1a
5. WATER STORAGE TANK FOUNDATION BAND AND SUBGRADE PER DETAIL G/C5.1a

FIRE WATER STORAGE TANK NOTES

1. TANK MANUFACTURER / SUPPLIER SHALL PROVIDE ALL THROUGH WALL AND FLOOR PIPE AND FITTINGS.
2. TANK SHALL BE MANUFACTURED, FURNISHED AND INSTALLED IN ACCORDANCE WITH AWWA D103–97, NFPA 22 AND THE CALIFORNIA BUILDING CODES, LATEST EDITION.
3. TANK THICKNESS SHALL CONFORM TO NFPA 22, LATEST EDITION.
4. A VISUAL WATER LEVEL GAUGE, NOTED AS SITE GAUGE ON PLANS, IS TO BE INSTALLED ON THE EXTERIOR OF THE TANK AT THE LOCATION DEPICTED ON THE PLANS.
5. TANK MANUFACTURER SHALL PROVIDE STRUCTURAL CALCULATIONS FOR TANK, FOUNDATION, ANCHORAGE, AND FREEBOARD REQUIRED SIGNED BY A REGISTERED IN CALIFORNIA STRUCTURAL ENGINEER.
6. ALL PIPES, FITTINGS, VALVES AND OTHER INLINE APPARATUS SHALL BE CLASS 150.
7. ALL ABOVEGROUND, EXTERIOR PIPING SHALL BE INSULATED PER DETAIL K/C5.1a
8. ALL UNDERGROUND BENDS OVER 11° SHALL HAVE THRUST BLOCKS, PER DETAIL J/C6.4a
9. FOUNDATION DESIGN IS BASED ON PRELIMINARY DESIGN ASSUMPTIONS AND SHALL BE VERIFIED ONCE TANK DESIGN IS COMPLETED BY MANUFACTURER.
10. SOIL PROPERTIES: PER SGSI GEOTECH REPORT NO. 3.31223. ALLOWABLE BEARING PRESSURE ASSUMES ALLUVIAL DEPOSITS ARE PRESENT AT TANK LOCATION 2' BELOW GRADE.

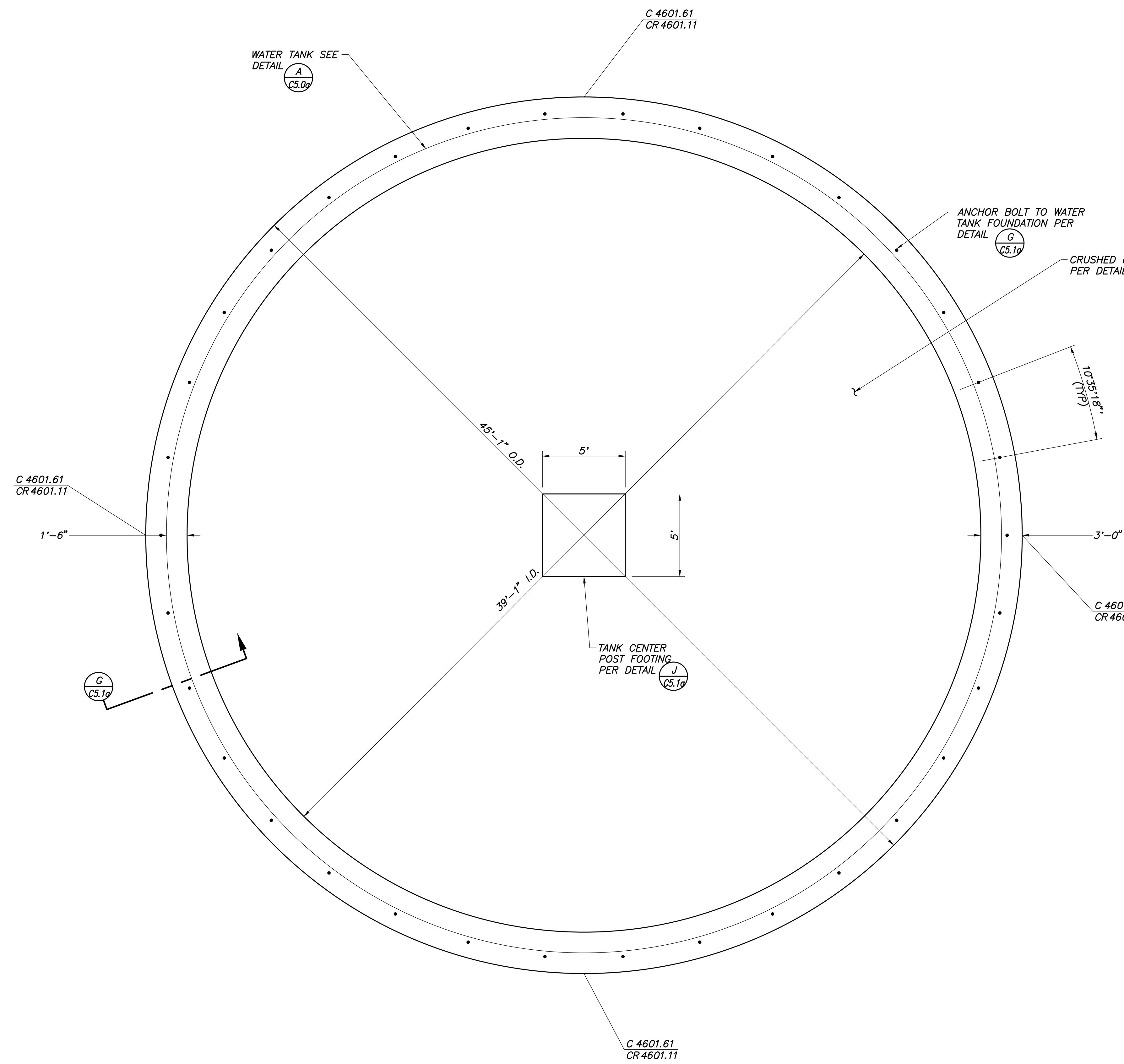

B/C5.0a FIRE WATER TANK FOUNDATION
NOT TO SCALE

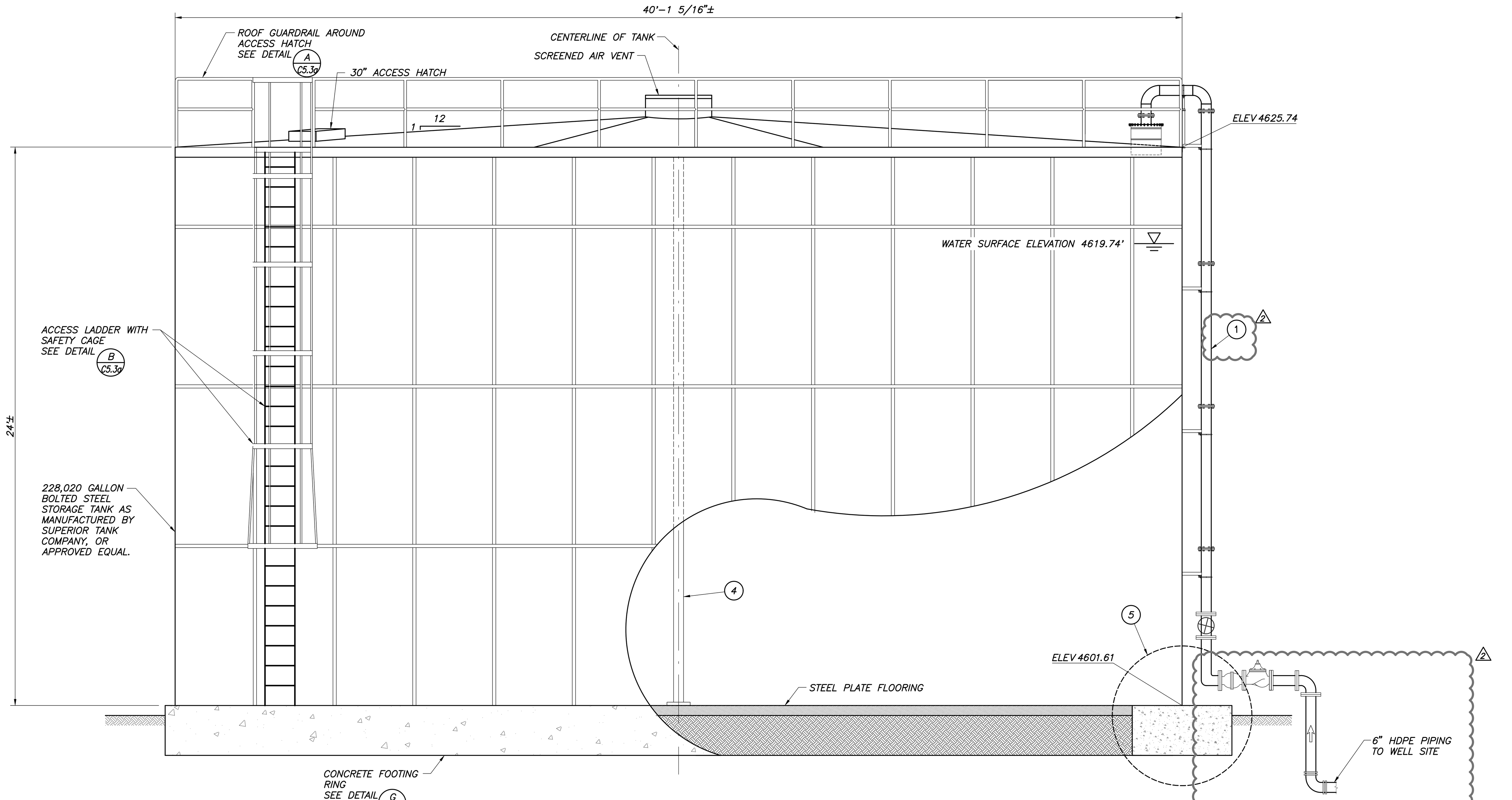

ELEVATION

A/C5.0a FIRE WATER STORAGE TANK
NOT TO SCALE

REGISTERED PROFESSIONAL ENGINEER PAIGE E. NOGA No. 78,395 CIVIL STATE OF CALIFORNIA
12/3/2021 Date Signed:

PLANS PREPARED BY:
Blair, Church & Flynn
CONSULTING ENGINEERS
451 Clovis Avenue, Suite 200
Clovis, California 93612
Tel (559) 326-1400
Fax (559) 326-1500

NO.	REVISIONS	DATE	SAP WO	SUPV	APPROVED	ENGR	CK'D	MADE	P.E.
1	ADDENDUM #1	03-19-2021				PN	PN	JR	PN
2	ENVIRONMENTAL HEALTH PLAN CHECK REVISIONS	06-18-2021				PN	PN	JR	PN
3	ADDENDUM #2	12-03-2021				PN	PN	JR	PN
4	ADDENDUM #3	02-18-2022				PN	PN	JR	PN

REFERENCE DRAWINGS | REFERENCE DRAWINGS

LOCATION: BISHOP, CALIFORNIA

BISHOP SERVICE CENTER
SITE DEVELOPEMENT
WATER TANK DETAILS

VOLUME 1

SHEET NO. C5.0a

SCALE: AS NOTED

26 OF 66 SHTS.

SOUTHERN CALIFORNIA EDISON An EDISON INTERNATIONAL Company

100% CONSTRUCTION DOCUMENTS (12-03-2021)

SOUTHERN CALIFORNIA EDISON
2012 - 5 SIZE

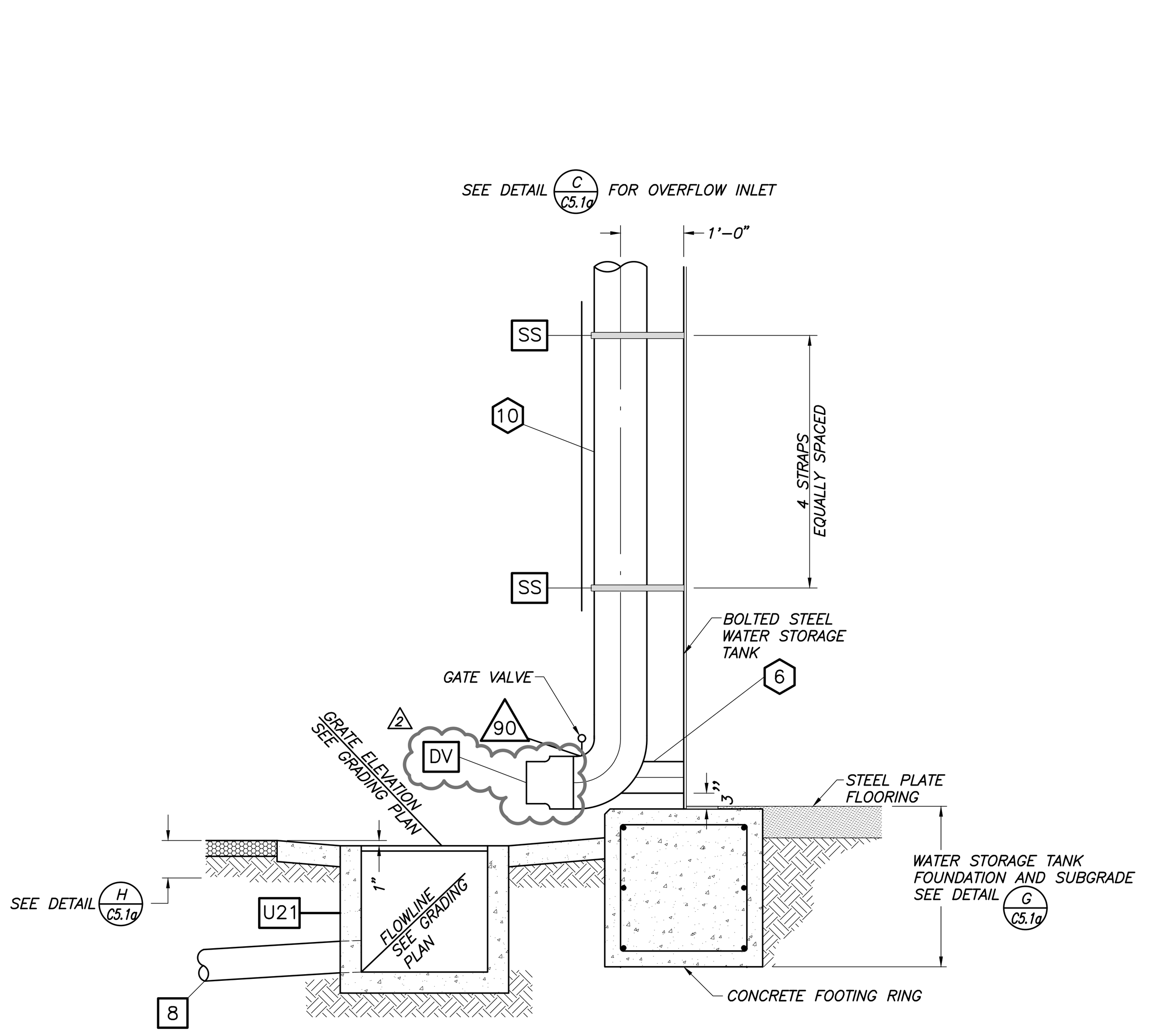

A OVERFLOW & DRAIN
C5.1a NOT TO SCALE

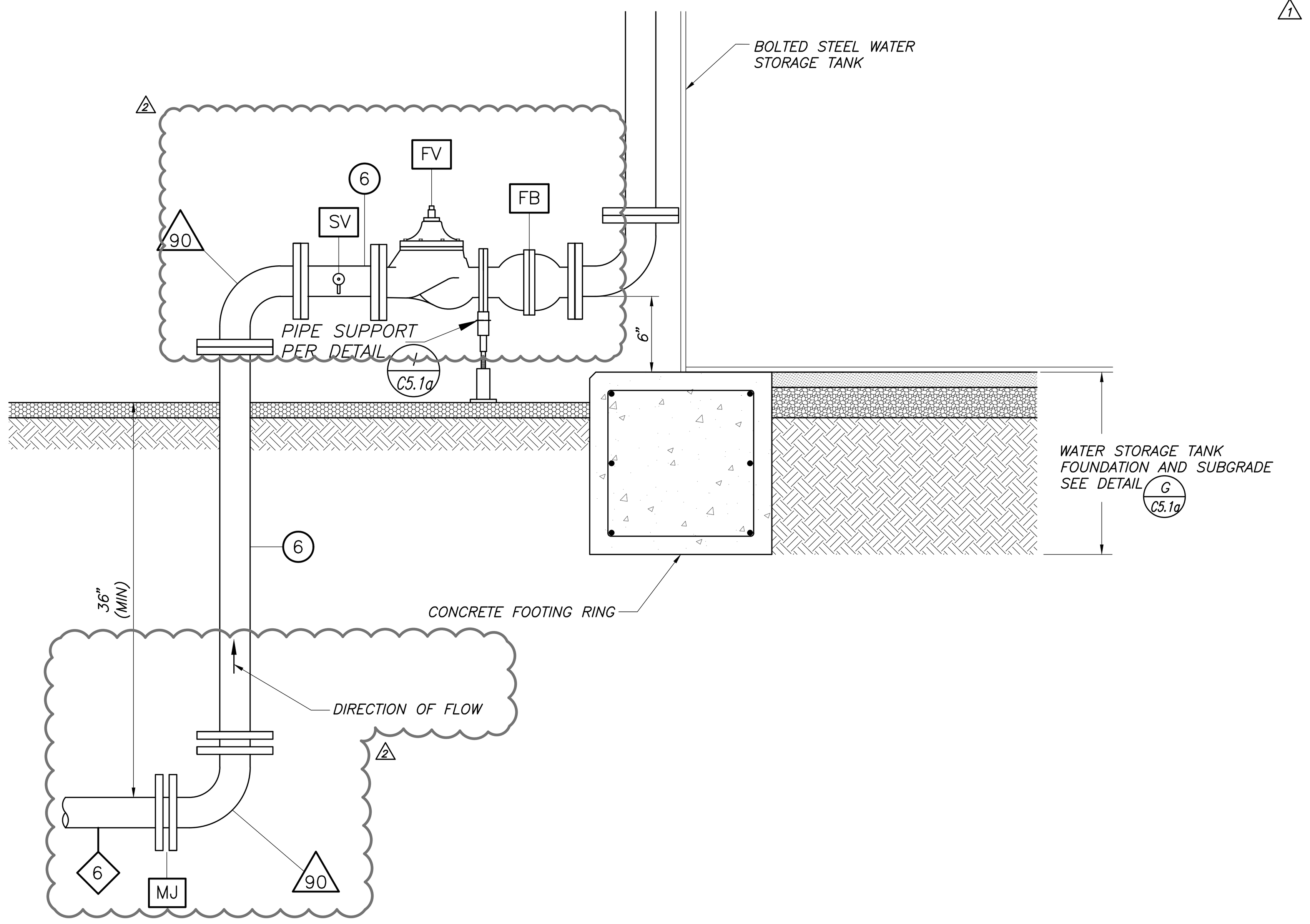

B TANK INLET
C5.1a NOT TO SCALE

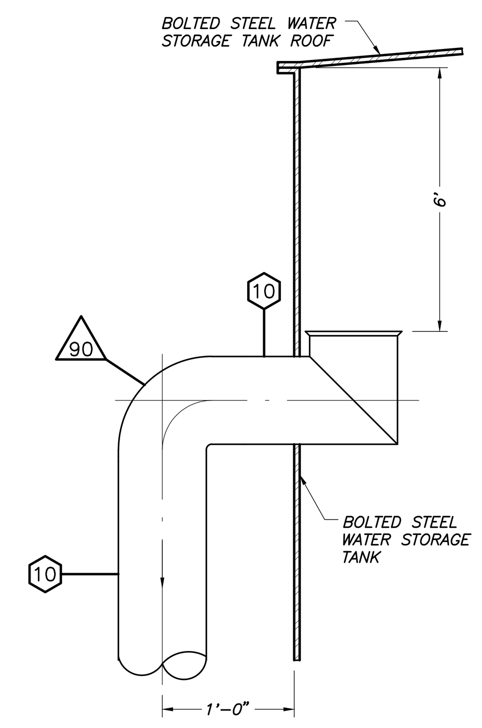

C OVERFLOW INLET
C5.1a NOT TO SCALE

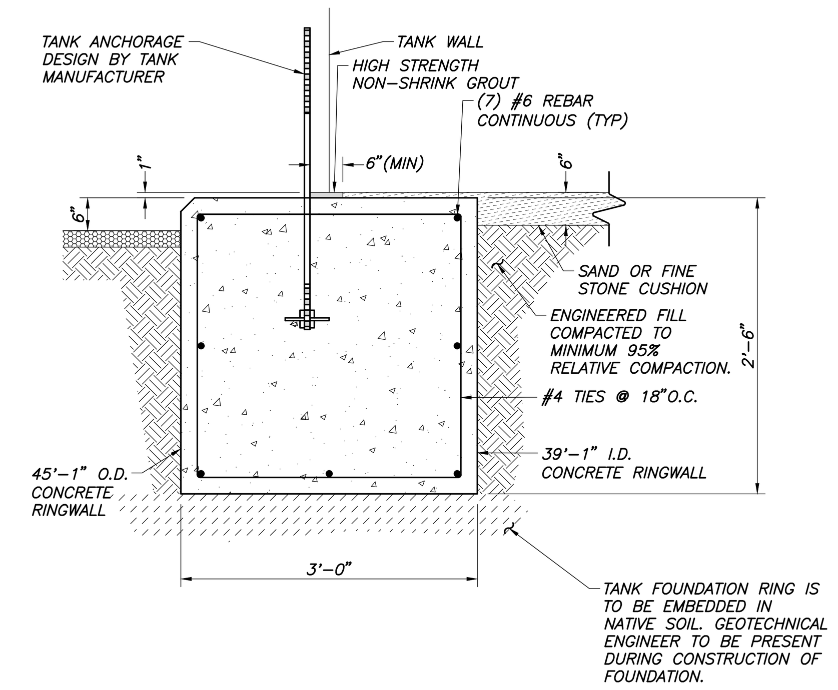

G WATER STORAGE TANK FOUNDATION
C5.1a NOT TO SCALE

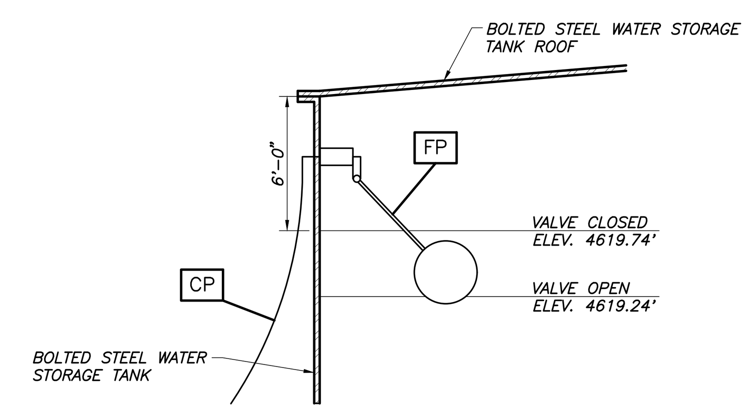

D FLOAT SWITCH
C5.1a NOT TO SCALE

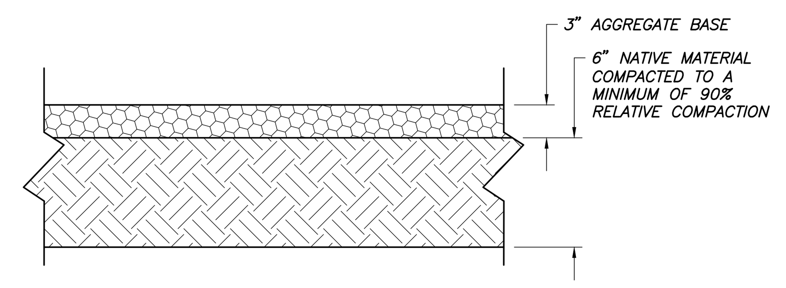

H CRUSHED ROCK
C5.1a NOT TO SCALE

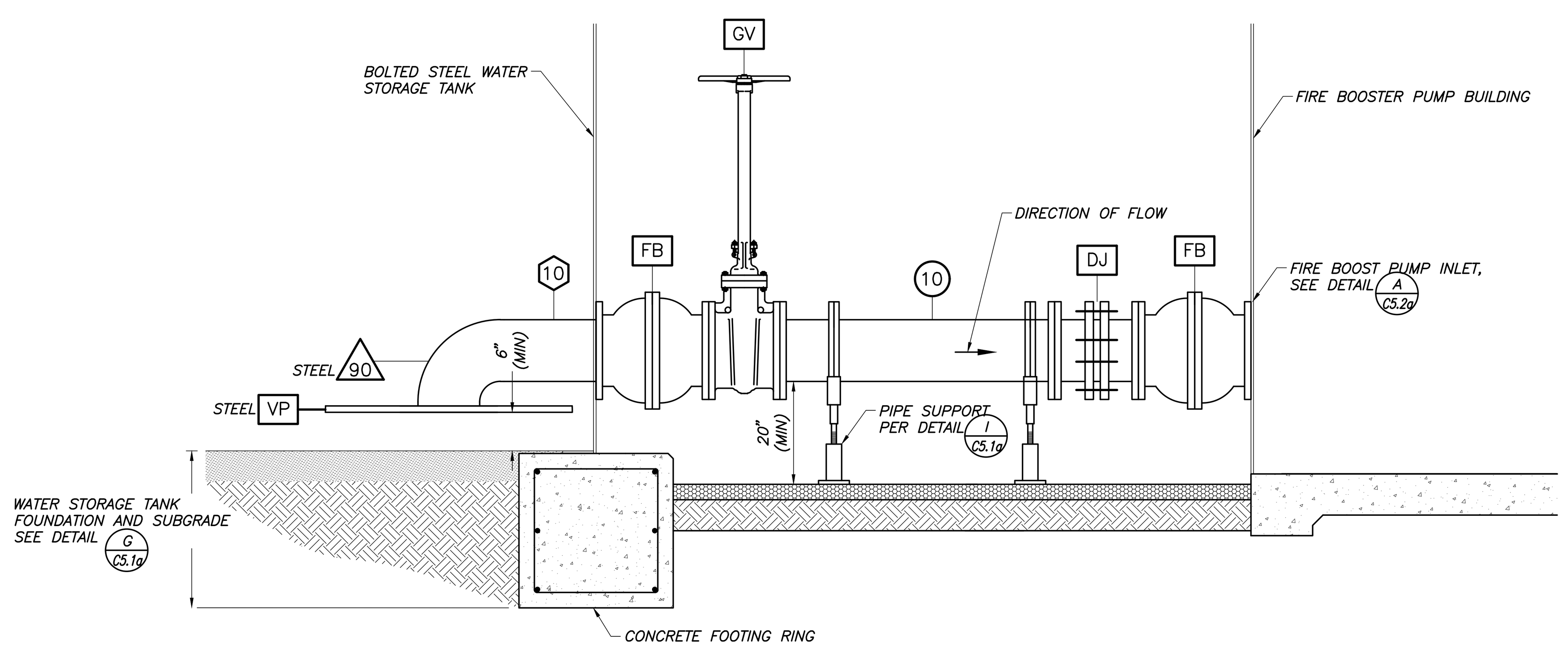

E TANK OUTLET – FIRE PUMP INLET
C5.1a NOT TO SCALE

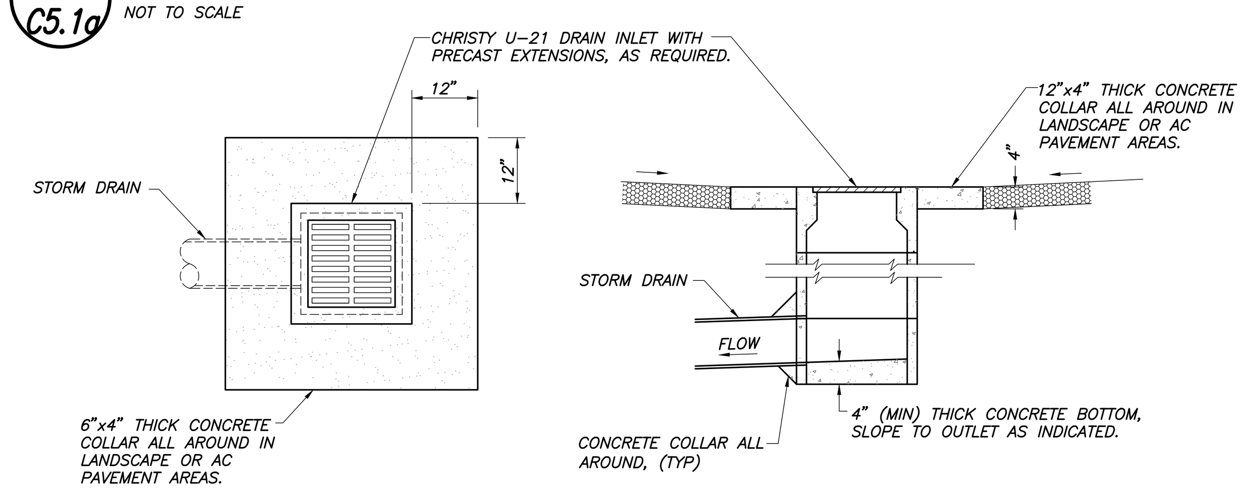

F U-21 CATCH BASIN
C5.1a NOT TO SCALE

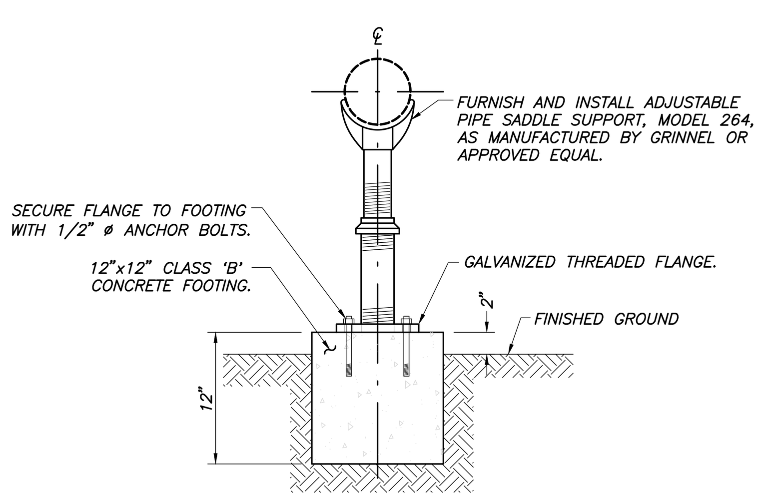

I PIPE SUPPORT
C5.1a NOT TO SCALE

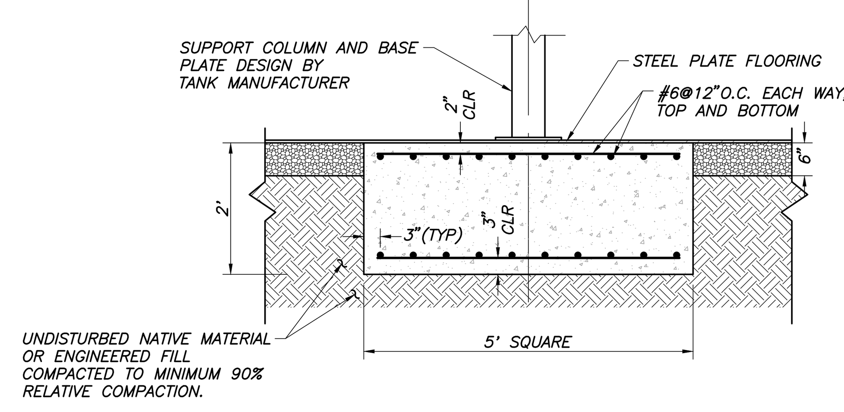

J TANK CENTER COLUMN AND FOOTING
C5.1a NOT TO SCALE

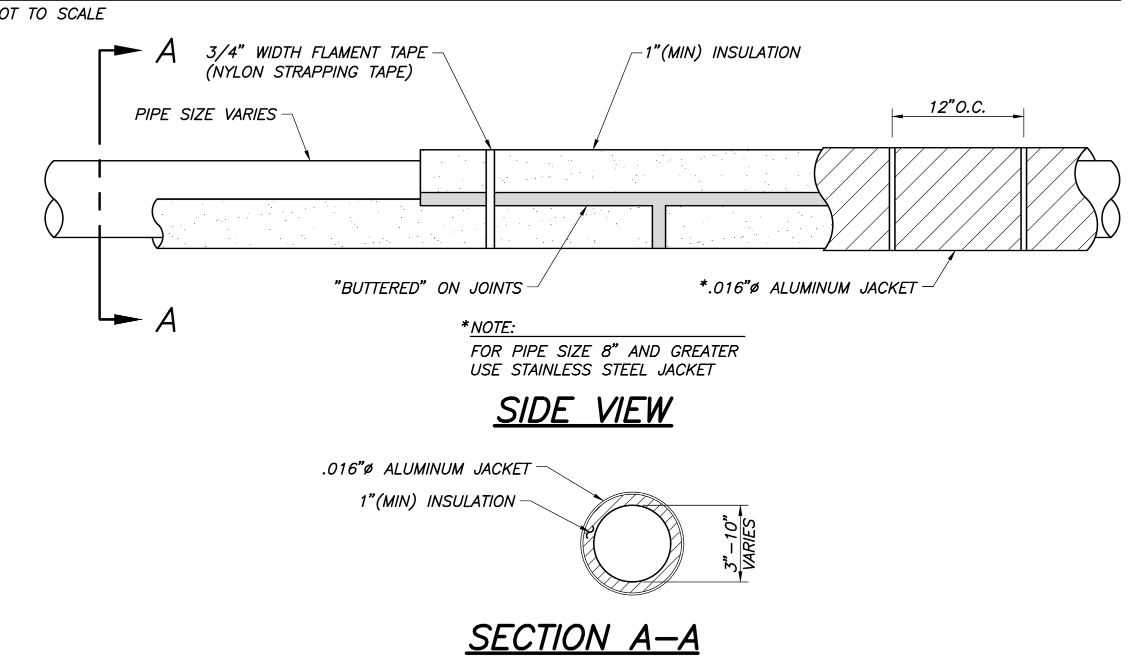

K ALUMINUM JACKET
C5.1a NOT TO SCALE

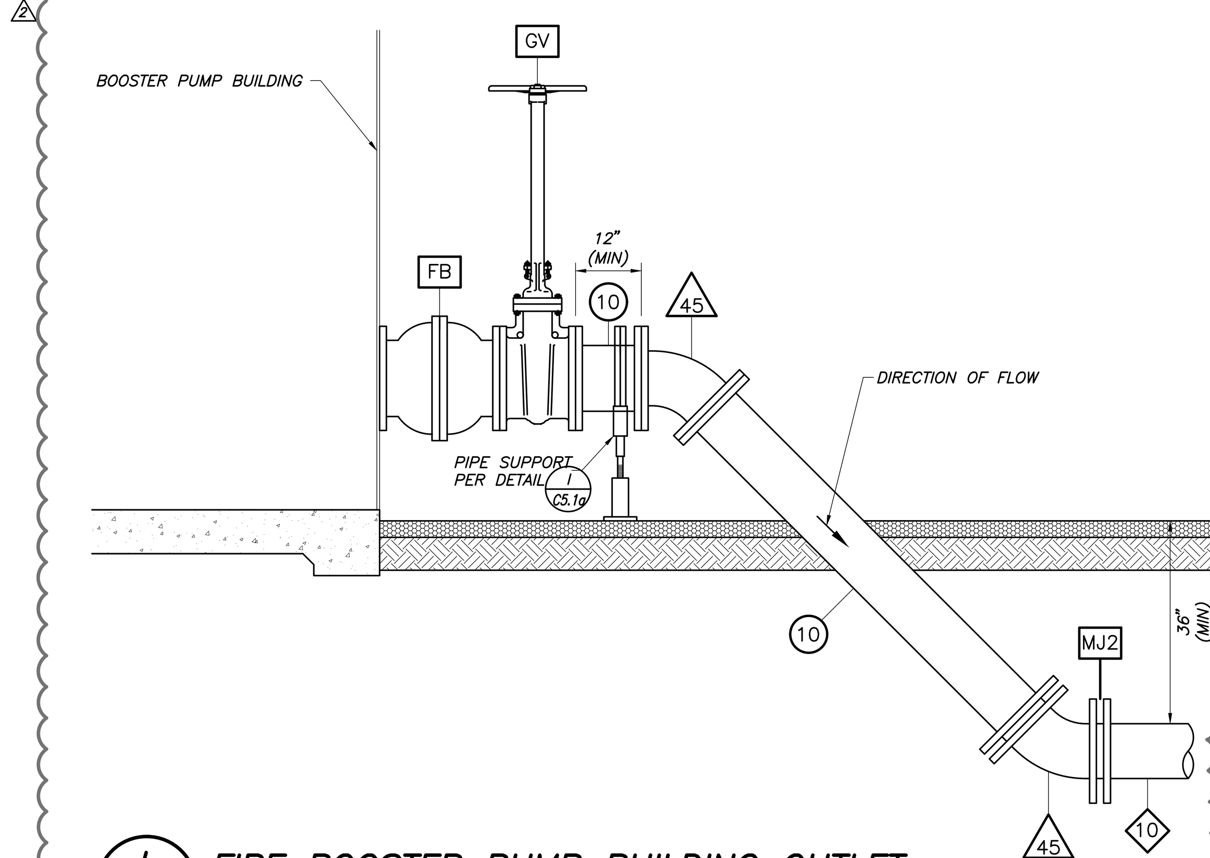

L FIRE BOOSTER PUMP BUILDING OUTLET
C5.1a NOT TO SCALE

APPARATUS	
CP	CONTROL CONDUIT PER FLOAT VALVE MANUFACTURER'S RECOMMENDATION
DJ	DISMANTLING JOINT, ROMAC DJ405 OR APPROVED EQUAL
DV	DUCKBILL CHECK VALVE, ONYX VALVE CO, SERIES DBS OR APPROVED EQUAL
FB	FLEXIBLE BALL JOINT, EBAA IRON FLEX-900 OR APPROVED EQUAL
FP	FLOAT PILOT
FV	FLOAT CONTROL VALVE, MODEL 206-F-V, AS MANUFACTURED BY SINGER VALVE OR APPROVED EQUAL. PER DETAIL D/C5.1a
GV	OS&Y GATE VALVE, RISING STEM
MJ	MECHANICAL JOINT ADAPTOR, DIPS DRISCOPLEX HDPE MOLDED FITTINGS OR APPROVED EQUAL
MJ2	MECHANICAL JOINT RESTRAINT, EBAA IRON 2000PV SERIES MEGALUG OR APPROVED EQUAL
SS	STEEL STRAPS ATTACHED TO TANK WALL.
SV	SAMPLE VALVE, DIXON MODEL BSVS-OC400B025 OR APPROVED EQUAL
U21	CONCRETE DRAIN INLET BOX, MODEL U21, AS MANUFACTURED BY CHRISTY WITH LIGHT DUTY RIVETED STEEL GRATE. PROVIDE 12" WIDE, 4" THICK, CLASS 'B' CONCRETE APRON AROUND INLET. PER DETAIL F/C5.1a
VP	STEEL VORTEX PLATE PER NFPA 20 AND 22

FITTINGS	
45	45° ELBOW
90	90° ELBOW

PIPE	
3 (circle)	DUCTILE IRON PIPE, SIZE AS NOTED.
3 (hexagon)	STEEL PIPE, SIZE AS NOTED
3 (diamond)	C900 DR 18 PVC PIPE OR HDPE DR 11, SIZE AS NOTED.
8 (square)	SDR 35 PVC STORM DRAIN PIPE

NOTES

1. ALL PIPES, FITTINGS, VALVES AND OTHER INLINE APPARATUS SHALL BE CLASS 150.
2. ALL ABOVEGROUND, EXTERIOR PIPING SHALL BE INSULATED PER SPECIFICATIONS.
3. ALL UNDERGROUND BENDS OVER 11° SHALL HAVE THRUST BLOCKS, PER DETAIL J/C6.4a
4. ALL ABOVEGROUND EXTERIOR PIPING SHALL BE INSULATED PER DETAIL K/C5.1a

PLANS PREPARED BY:
Blair, Church & Flynn
CONSULTING ENGINEERS
451 Clovis Avenue, Suite 200
Clovis, California 93612
Tel (559) 326-1400
Fax (559) 326-1500

REGISTERED PROFESSIONAL ENGINEER PAIGE E. NOGA No. 78,395 CIVIL STATE OF CALIFORNIA
12/3/2021 Date Signed:

REFERENCE DRAWINGS	REFERENCE DRAWINGS	NO.	REVISIONS	DATE	SAP WO	SUPV	APPROVED	ENGR	CK'D	MADE	P.E.

NO.	REVISIONS	DATE	SAP WO	SUPV	APPROVED	ENGR	CK'D	MADE	P.E.
1	ADDENDUM #1	03-19-2021				PN	PN	JR	PN
2	ENVIRONMENTAL HEALTH PLAN CHECK REVISIONS	06-18-2021				PN	PN	JR	PN
3	ADDENDUM #2	12-03-2021				PN	PN	JR	PN
4	ADDENDUM #3	02-18-2022				PN	PN	JR	PN

LOCATION: BISHOP, CALIFORNIA

BISHOP SERVICE CENTER
SITE DEVELOPEMENT
WATER TANK DETAILS

VOLUME 1

SOUTHERN CALIFORNIA EDISON An EDISON INTERNATIONAL Company

SHEET NO. C5.1a

SCALE: AS NOTED

27 OF 66 SHTS.

100% CONSTRUCTION DOCUMENTS (12-03-2021)

SOUTHERN CALIFORNIA EDISON
2012 - 5 SIZE

LEGEND

1. PUMP 10x8M
2. ELECTRIC MOTOR 405TS ODP
3. BASE 10x8M W405TS
4. ORANGE PEEL GUARD #25 WITH 9" RISER
5. CUTLERHAMMER CONTROLLER FD 90 SOFT START
6. PATTERSON JOCKEY PUMP CONTROLLER
7. GRUNDFOS JOCKEY PUMP CR3–17
8. VALVE HOSE HEADER 8" FLANGED 150#
9. DUAL VOLTAGE PANEL 48"x20"x6"
10. HAMMOND TRANSFORMER 7.5KVA
11. EXHAUST FAN 24"
12. MOTORIZED LOUVER / DAMPER 30"
13. DOUBLE DOOR 6FT (TRACHTE BUILDING)
14. EXTERIOR LIGHT
15. EMERGENCY LIGHT
16. LIGHT SWITCH WALL MOUNT
17. ELECTRICAL OUTLET
18. OVERHEAD LIGHT 4'x1'
19. SPRINKLER HEAD
20. HEATER (STANDARD)
21. VALVE GATE 10" FLANGED 150#W 1 1/4"NPT LOC A
22. CHECK VALVE 10"WFR #KW–900W 250 PSI NIBCO
23. VALVE BUTTERFLY 8" #LD3510–8 250# PSI
24. VALVE BUTTERFLY 10" #LD3510–8 250# PSI
25. CONCENTRIC REDUCER 10x8 FLANGED 150#
26. TRACHTE BUILDING 132"x216" (96" CEILING HEIGHT)
27. SKID STRUCTURE W12x26#

CONNECTION LEGEND

- A — SUCTION CONNECTION 10" 150#FF
- B — DISCHARGE CONNECTION 10" 150#FF
- C — JOCKEY PUMP CONNECTION 1 1/4"NPT SUCTION SIDE
- D — JOCKEY PUMP CONNECTION 1 1/4"NPT DISCHARGE SIDE
- E — SENSING LINE CONNECTION 1/2"NPT
- F — BALL DRIP VALVE 1/2"NPT
- G — LIFTING POINTS PIPE 6" SCH. 40
- H — PACKING BOX DRAIN 1"NPT

NOTES

1. ANCHOR BOLT HOLES AVAILABLE ONLY UPON CUSTOMER REQUEST.
2. IF THERE IS A DRAIN OR ANY OTHER OBSTRUCTION IN THE FLOOR THAT SHOULD BE CONSIDERED, PLEASE LOCATE IT ON THIS DRAWING.
3. THIS SKID IS DESIGNED TO BE FILLED WITH CONCRETE AT INSTALLATION. THE BASE PLATE (UNDER THE PUMP AND DRIVER) IS TO BE GROUTED PER INSTRUCTIONS IN THE O & M MANUALS SENT WITH THE UNIT.
4. DUE TO VARIATIONS IN THE PIPE FITTINGS, CUSTOMER PIPE CONNECTION LOCATIONS MAY VARY ±1/2". IT IS RECOMMENDED THAT PIPING NOT BE ANCHORED RIGIDLY UNTIL FINAL FIT–UP IS COMPLETE.
5. TAMPER SWITCHES ARE PROVIDED ON ALL BUTTERFLY VALVES, WIRING OF THESE SWITCHES WILL BE BY GENERAL CONTRACTOR.
6. IF APPLICABLE BUILDING HEATER, EMERGENCY LIGHT, LIGHTS, JOCKEY PUMP CONTROL PANEL, JOCKEY PUMP, AND OTHER ITEMS THAT MAY BE DIMENSIONED IN PARENTHESIS (), ARE SHOWN IN THEIR GENERAL RESPECTIVE LOCATIONS AND MAY VARY SLIGHTLY FROM THE LOCATION SHOWN ON THE DRAWING.
7. CASING RELIEF VALVE DISCHARGE DRAIN IS NOT PLUMBED UNLESS SPECIFIED BE CUSTOMER.

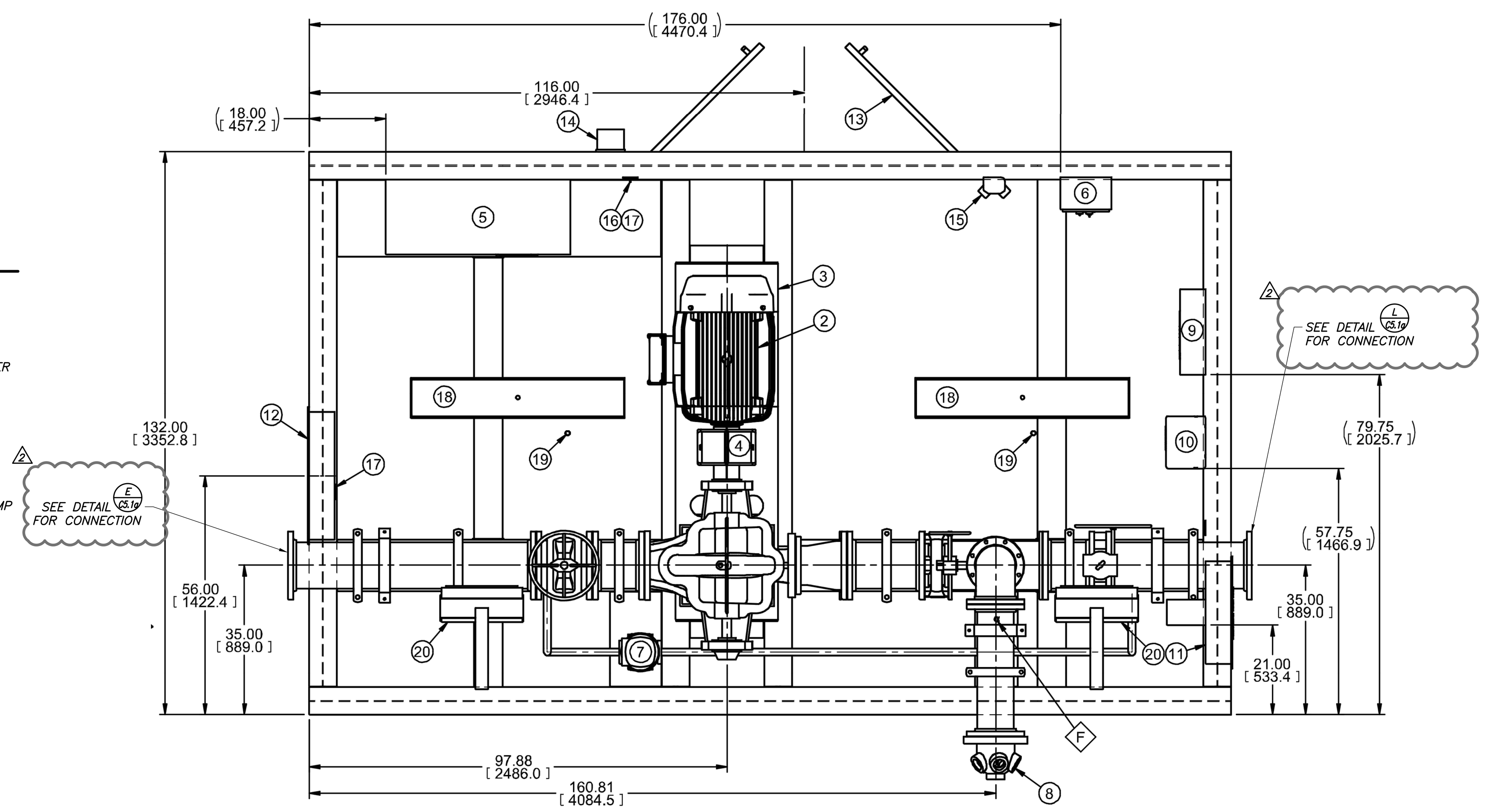

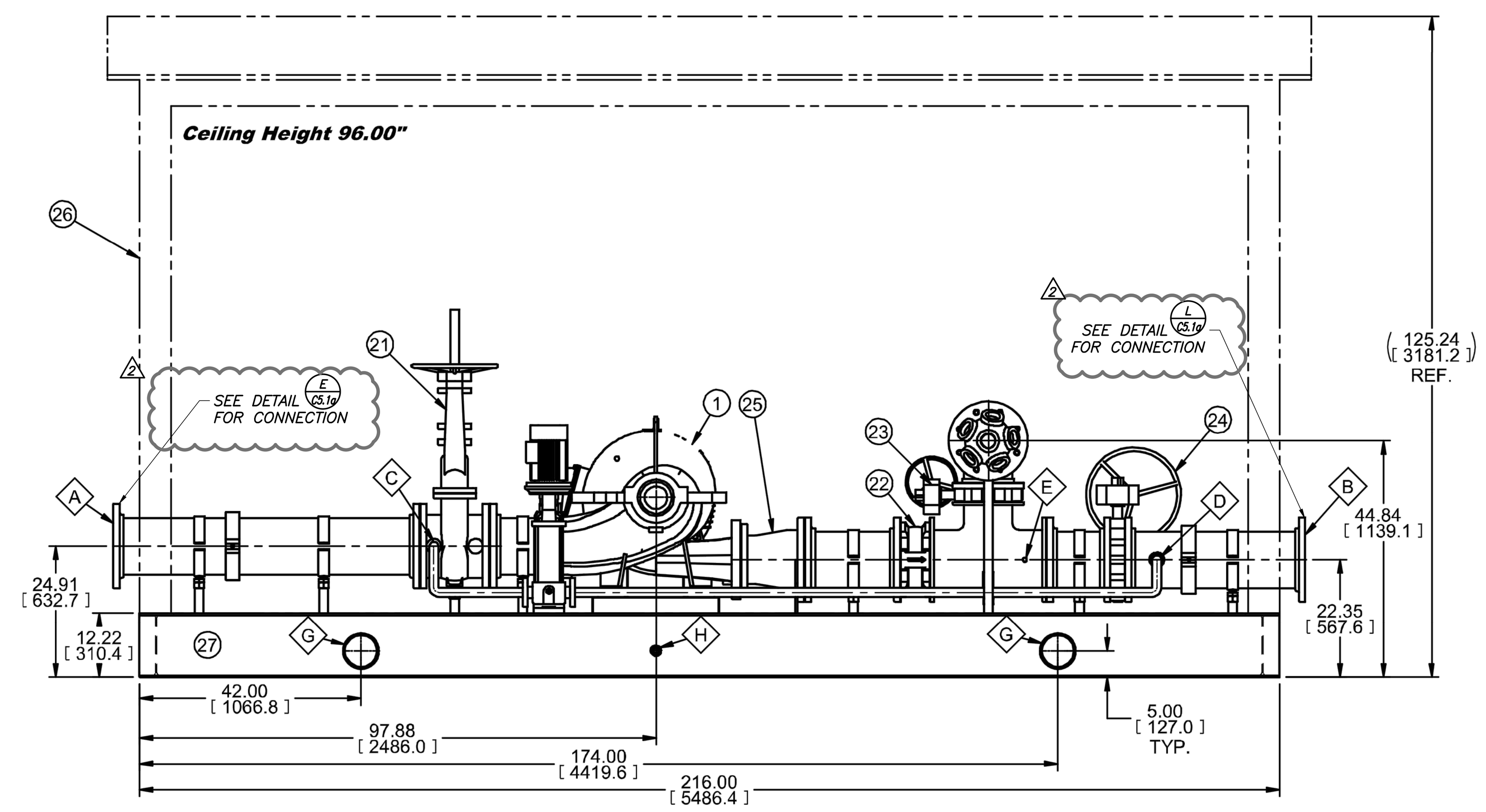

A / C5.2a — PACKAGED FIRE BOOSTER PUMP BUILDING
NOT TO SCALE

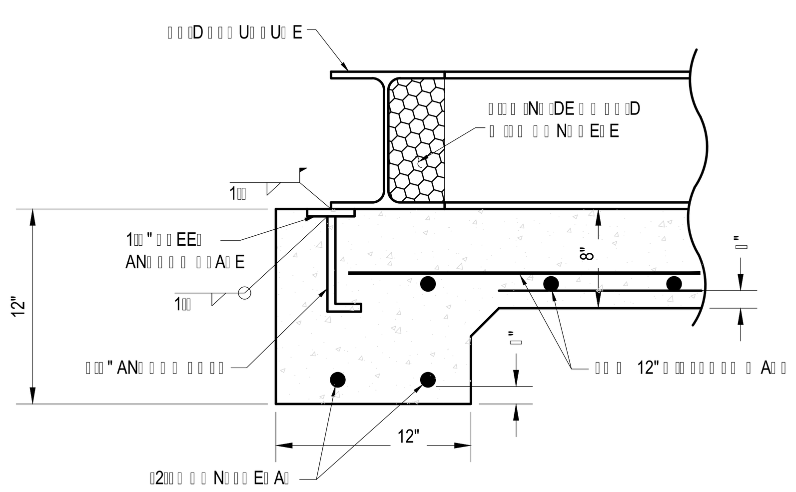

B / C5.2a — PACKAGED FIRE BOOSTER PUMP BUILDING SLAB
NOT TO SCALE

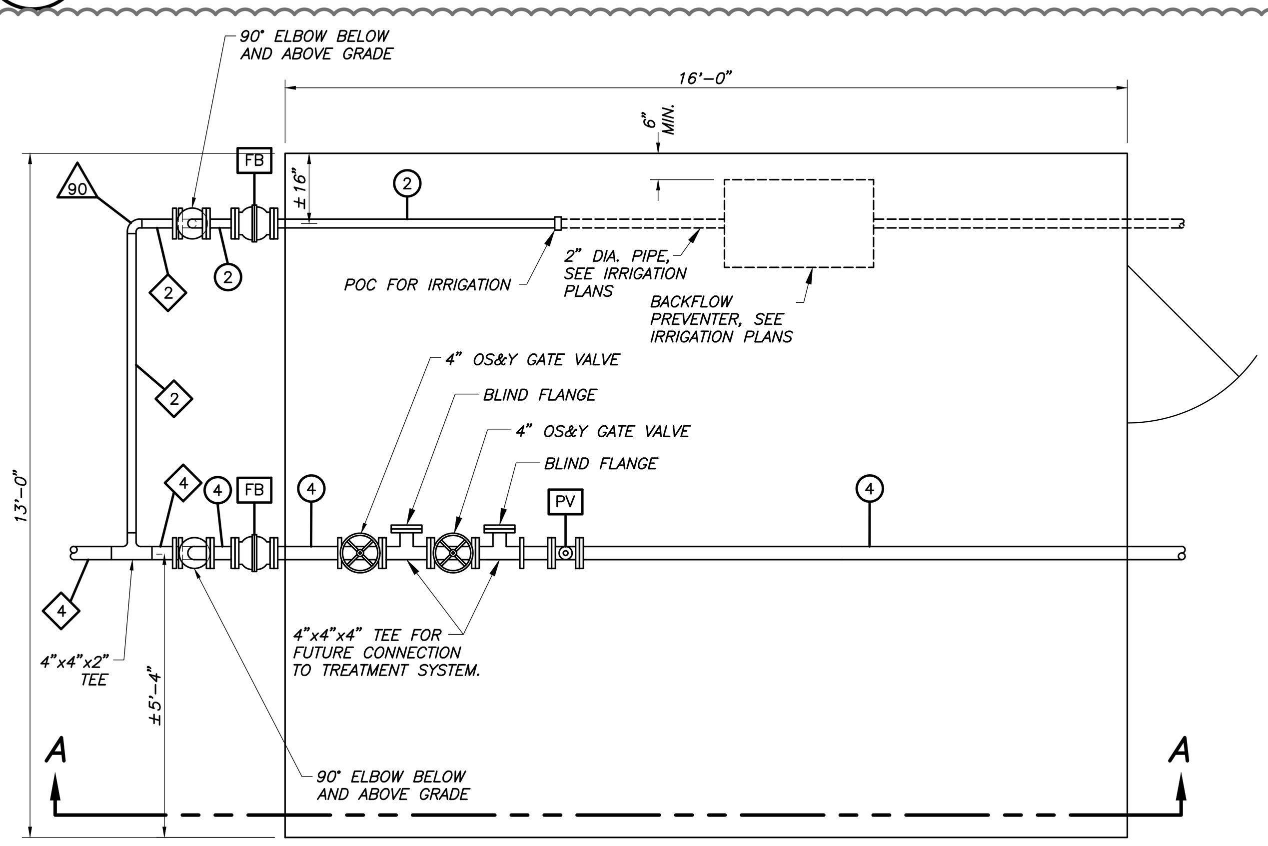

PROPOSED FLOOR PLAN

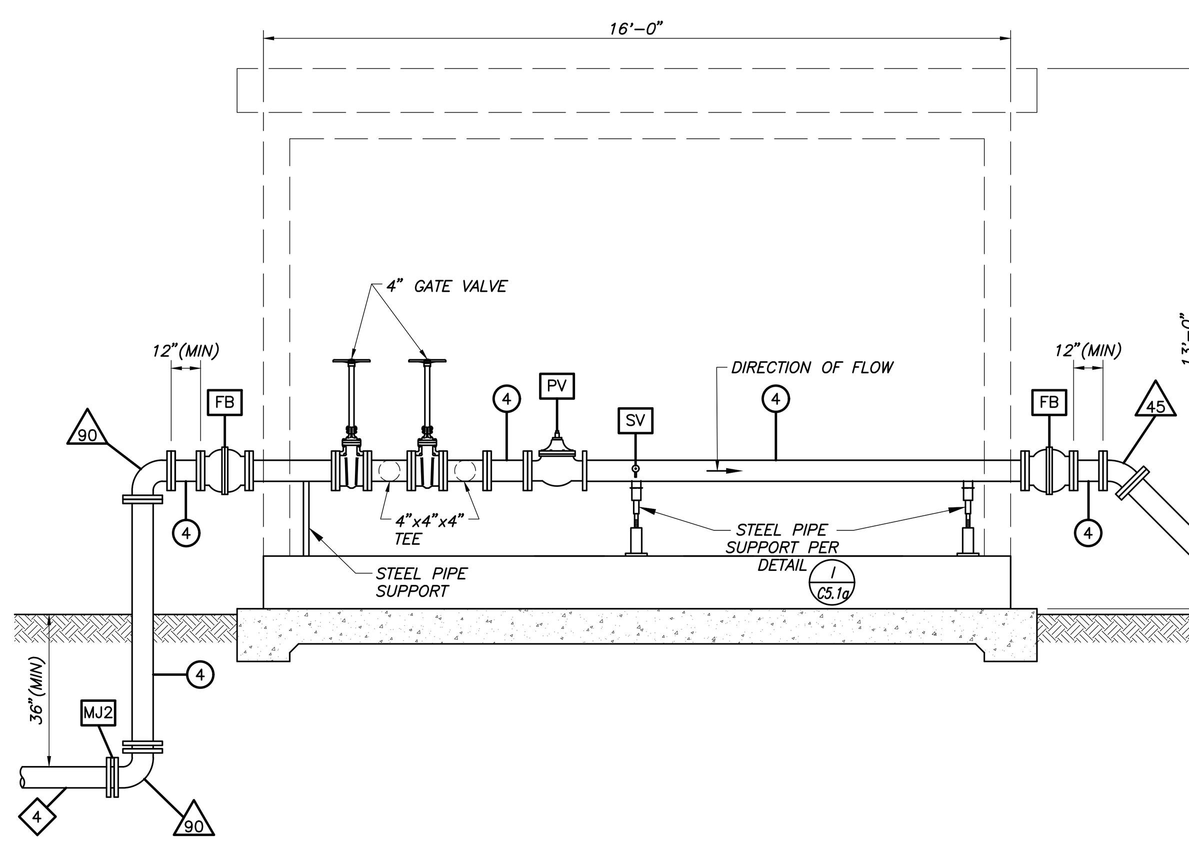

SECTION A–A

APPARATUS	
PV	FLANGED FULL PORT PRESSURE REDUCING CONTROL VALVE, WATTS M115–4 FL, OR APPROVED EQUAL. PRESSURE TO BE REDUCED TO 50 PSI
FB	FLEXIBLE BALL JOINT, EBAA IRON FLEX–900 OR APPROVED EQUAL
MJ2	MECHANICAL JOINT RESTRAINT, EBAA IRON 2000PV SERIES MEGALUG OR APPROVED EQUAL
SV	SAMPLE VALVE, DIXON MODEL BSVS–OC400B025 OR APPROVED EQUAL

FITTINGS	
45	45° ELBOW
90	90° ELBOW

PIPE	
4 (circle)	DUCTILE IRON PIPE, SIZE AS NOTED.
4 (diamond)	C900 DR 18 PVC PIPE OR HDPE DR 11, SIZE AS NOTED.

NOTES

1. ALL PIPES, FITTINGS, VALVES AND OTHER INLINE APPARATUS SHALL BE CLASS 150.
2. ALL UNDERGROUND BENDS OVER 11° SHALL HAVE THRUST BLOCKS, PER DETAIL J/C6.4a
3. ALL ABOVEGROUND EXTERIOR PIPING SHALL BE INSULATED PER DETAIL K/C5.1a

C / C5.2a — DOMESTIC WATER TANKS AND IRRIGATION PUMP LAYOUT
NOT TO SCALE

PLANS PREPARED BY:
Blair, Church & Flynn
CONSULTING ENGINEERS
451 Clovis Avenue, Suite 200
Clovis, California 93612
Tel (559) 326-1400
Fax (559) 326-1500

REGISTERED PROFESSIONAL ENGINEER PAIGE E. NOGA No. 78,395 CIVIL STATE OF CALIFORNIA
12/3/2021 Date Signed:

NO.	REVISIONS	DATE	SAP WO	SUPV	APPROVED	ENGR	CK'D	MADE	P.E.
1	ADDENDUM #1	03-19-2021				PN	PN	JR	PN
2	ENVIRONMENTAL HEALTH PLAN CHECK REVISIONS	06-18-2021				PN	PN	JR	PN
3	ADDENDUM #2	12-03-2021				PN	PN	JR	PN
4	ADDENDUM #3	02-18-2022				PN	PN	JR	PN

REFERENCE DRAWINGS | REFERENCE DRAWINGS

LOCATION: BISHOP, CALIFORNIA
BISHOP SERVICE CENTER
SITE DEVELOPEMENT
WATER TANK DETAILS
VOLUME 1
SOUTHERN CALIFORNIA EDISON — An EDISON INTERNATIONAL Company
SHEET NO. C5.2a
SCALE: AS NOTED
28 OF 66 SHTS.

100% CONSTRUCTION DOCUMENTS (12-03-2021)

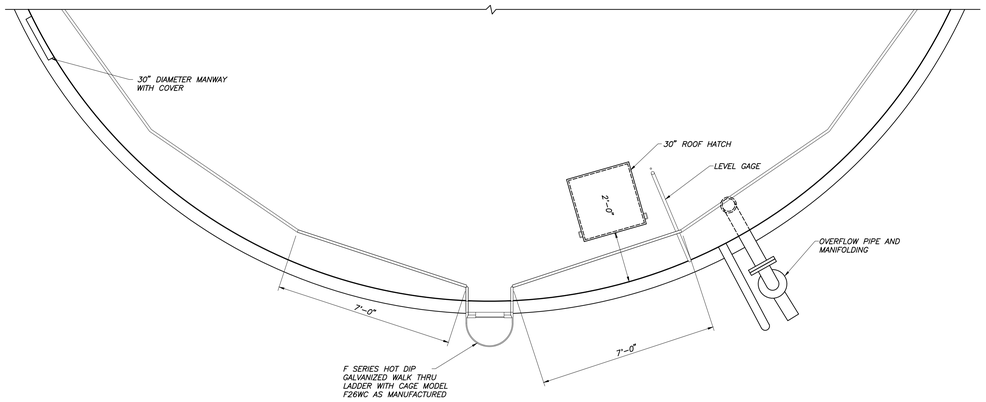

A / C5.3a ROOF GUARDRAIL

NOT TO SCALE

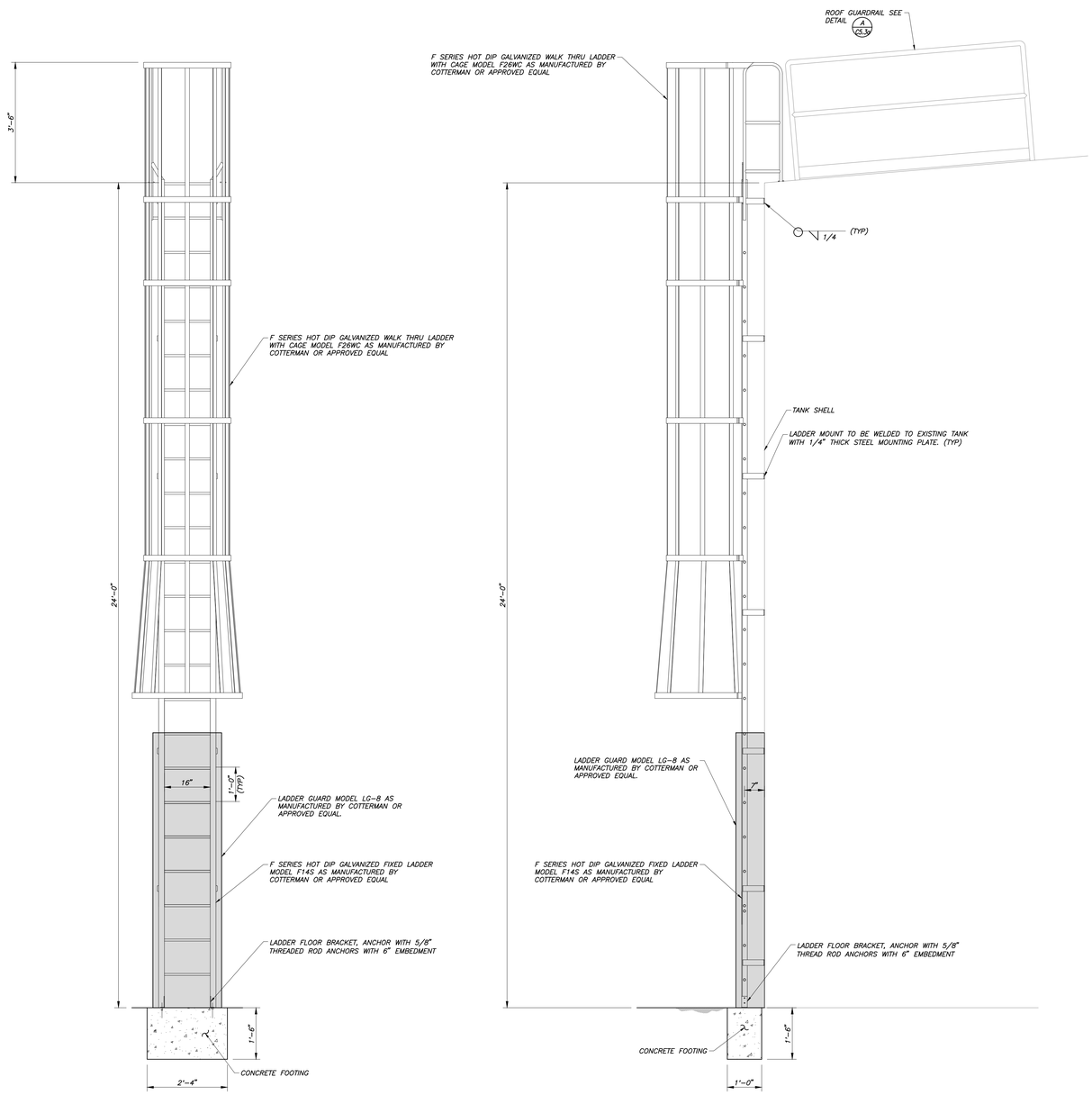

B / C5.3a TANK ACCESS LADDER

NOT TO SCALE

PLANS PREPARED BY:

Blair, Church & Flynn
CONSULTING ENGINEERS
4821 Clovis Avenue, Suite 200
Clovis, California 93612
Tel (559) 326-1400
Fax (559) 326-1500

REGISTERED PROFESSIONAL ENGINEER — PAUL E. NAGY — No. 78,395 — CIVIL — STATE OF CALIFORNIA

12/3/2021
Date Signed

REFERENCE DRAWINGS	REFERENCE DRAWINGS	NO.	REVISIONS	DATE	SAP WO	SUPV	APPROVED	ENGR	CK'D	MADE	P.E.

NO.	REVISIONS	DATE	SAP WO	SUPV	APPROVED	ENGR	CK'D	MADE	P.E.
1	ADDENDUM #1	03-19-2021				PN	PN	JR	PN
2	ENVIRONMENTAL HEALTH PLAN CHECK REVISIONS	06-18-2021				PN	PN	JR	PN
3	ADDENDUM #2	12-03-2021				PN	PN	JR	PN
4	ADDENDUM #3	02-18-2022				PN	PN	JR	PN

LOCATION: BISHOP, CALIFORNIA

BISHOP SERVICE CENTER
SITE DEVELOPEMENT
WATER TANK DETAILS

VOLUME 1

SOUTHERN CALIFORNIA EDISON An EDISON INTERNATIONAL Company

SHEET NO.
C5.3a

SCALE: AS NOTED

29 OF 66 SHTS.

100% CONSTRUCTION DOCUMENTS (12-03-2021)

Drawing: P:\019-030\SITEproductiondrawings\01 - SiteWater Tank Details\dwg; C5.3a Water Tank Details - BCF.ctb
Plot By: jfeguire Feb 22, 2022 7:28am

SOUTHERN CALIFORNIA EDISON
2012 - 5 SIZE

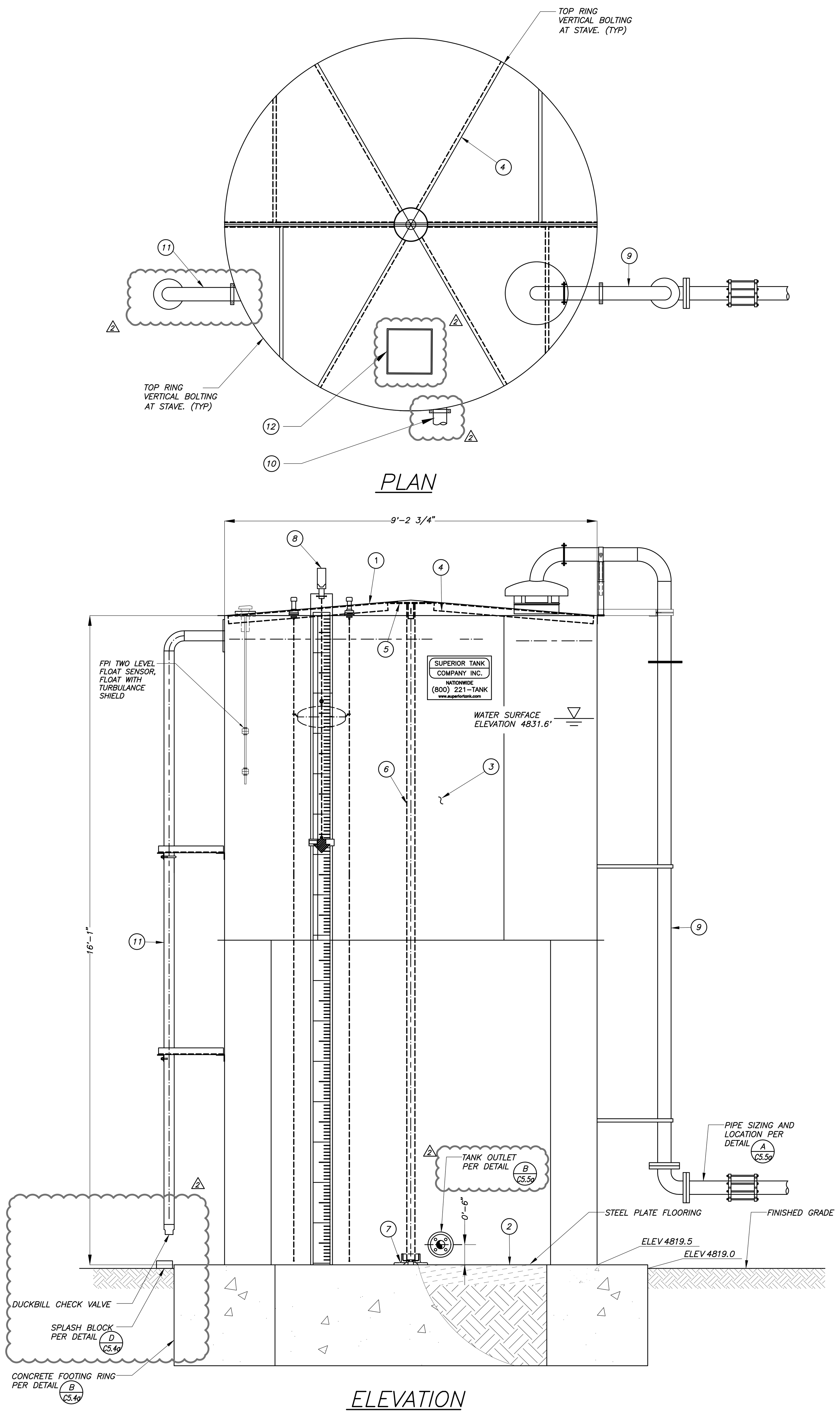

A WATER STORAGE TANK (C5.4a)
NOT TO SCALE

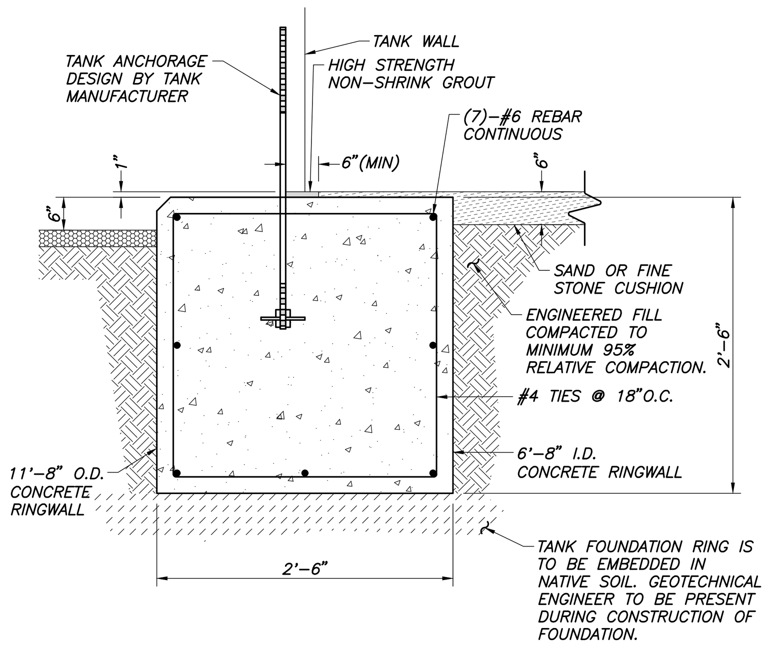

B WATER STORAGE TANK FOUNDATION (C5.4a)
NOT TO SCALE

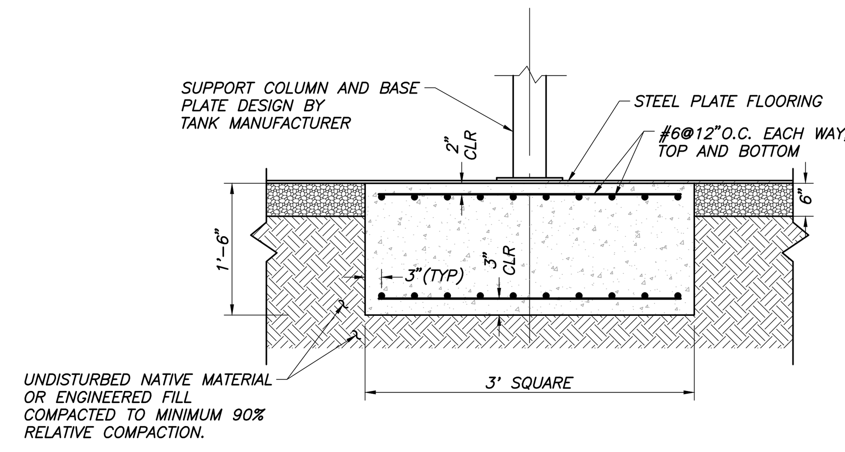

C TANK CENTER COLUMN AND FOOTING (C5.4a)
NOT TO SCALE

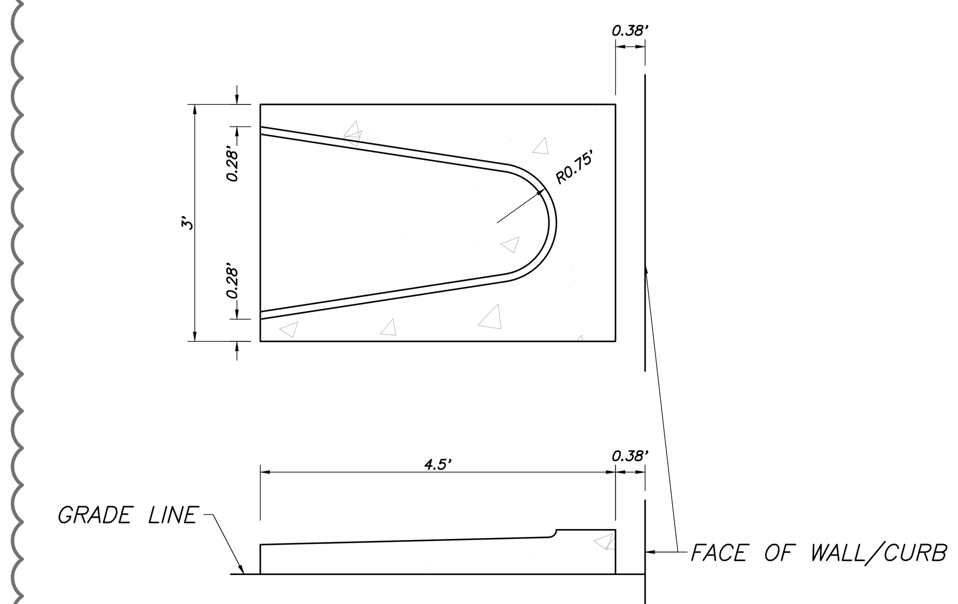

D SPLASH BLOCK (C5.4a)
NOT TO SCALE

SYMBOL LEGEND

1. DECK
2. BOTTOM
3. SHELL
4. RAFTERS
5. RAFTER HAT WITH PIPE SLEEVE WELDED AT BOTTOM
6. CENTER COLUMN
7. COLUMN BASE
8. LIQUID LEVEL INDICATOR
9. INLET
10. OUTLET
11. OVERFLOW
12. ACCESS HATCH

WATER STORAGE TANK NOTES

1. TANK MANUFACTURER / SUPPLIER SHALL PROVIDE ALL THROUGH WALL AND FLOOR PIPE AND FITTINGS.
2. TANK SHALL BE MANUFACTURED, FURNISHED AND INSTALLED IN ACCORDANCE WITH AWWA D103-97, NFPA 22 AND THE CALIFORNIA BUILDING CODES, LATEST EDITION.
3. TANK THICKNESS SHALL CONFORM TO NFPA 22, LATEST EDITION.
4. A VISUAL WATER LEVEL GAUGE, NOTED AS SITE GAUGE ON PLANS, IS TO BE INSTALLED ON THE EXTERIOR OF THE TANK AT THE LOCATION DEPICTED ON THE PLANS.
5. TANK MANUFACTURER SHALL PROVIDE STRUCTURAL CALCULATIONS FOR TANK, FOUNDATION, ANCHORAGE, AND FREEBOARD REQUIRED SIGNED BY A REGISTERED IN CALIFORNIA STRUCTURAL ENGINEER.
6. ALL PIPES, FITTINGS, VALVES AND OTHER INLINE APPARATUS SHALL BE CLASS 150.
7. ALL ABOVEGROUND, EXTERIOR PIPING SHALL BE INSULATED PER DETAIL K/C5.1a
8. ALL UNDERGROUND BENDS OVER 11° SHALL HAVE THRUST BLOCKS, PER DETAIL J/C6.4a
9. EXTERIOR COATING OF TANK & ACCESSORIES TO BE FUSION BONDED BAKED-ON POWDER POLYESTER 3 MILS. D.F.T. COLOR: "DUPONT" SUPERIOR SAND #PFT-609-S6.
10. INTERIOR COATING OF TANK & ACCESSORIES TO BE FUSION BONDED BAKED-ON POWDER EPOXY 5 MILS. D.F.T. (N.S.F. 61 APPROVED) COLOR: "DUPONT" TANK TAN #EFT-602-P7.
11. ALL BOLTS & NUTS TO BE HOT DIP GALV. - BOLTS TO BE GRADE 5.
12. ALL TANK BOTTOM TO BE VACUUM TESTED PRIOR TO WATER TEST.
13. ONE DEGREE OF ARC TAKEN ON SHELL O.D. = 15/16"
14. ALL TANK OPENINGS TO BE FIELD LOCATED, EXCEPT ITEM 10.
15. ORIENTATION FOR NOZZLES AND ACCESSORIES ARE TO BE FIELD LOCATED BY OWNER.

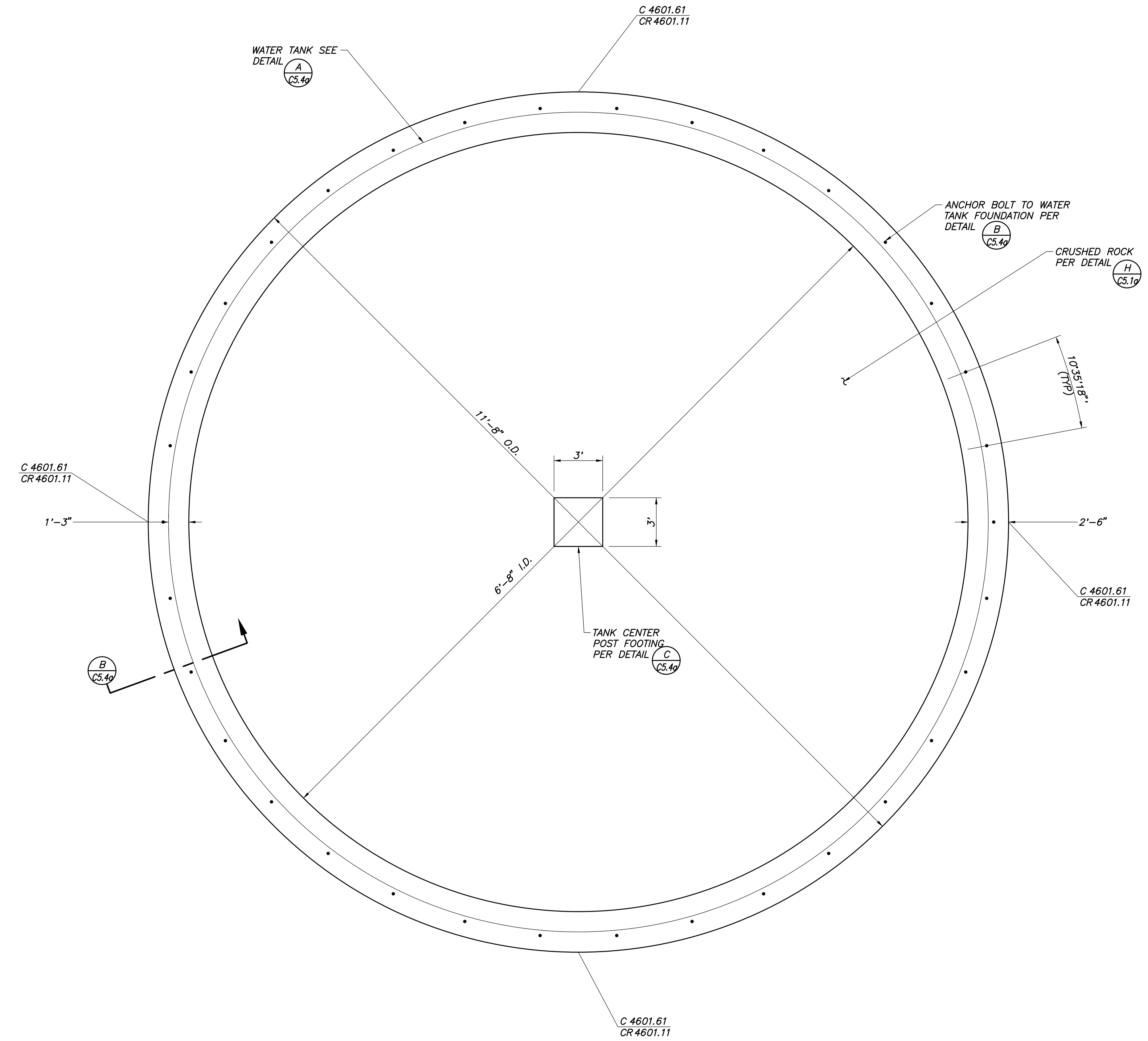

E WATER STORAGE TANK - FOUNDATION PLAN (C5.4a)
NOT TO SCALE

													1	ADDENDUM #1	03-19-2021				PN	PN	JR	PN
													2	ENVIRONMENTAL HEALTH PLAN CHECK REVISIONS	06-18-2021				PN	PN	JR	PN
													3	ADDENDUM #2	12-03-2021				PN	PN	JR	PN
													4	ADDENDUM #3	02-18-2022				PN	PN	JR	PN
REFERENCE DRAWINGS		REFERENCE DRAWINGS	NO.	REVISIONS	DATE	SAP WO	SUPV	APPROVED	ENGR	CK'D	MADE	P.E.	NO.	REVISIONS	DATE	SAP WO	SUPV	APPROVED	ENGR	CK'D	MADE	P.E.

PLANS PREPARED BY:
Blair, Church & Flynn
CONSULTING ENGINEERS
451 Clovis Avenue, Suite 200
Clovis, California 93612
Tel (559) 326-1400
Fax (559) 326-1500

REGISTERED PROFESSIONAL ENGINEER PAIGE E. NOGA No. 78,395 CIVIL STATE OF CALIFORNIA
12/3/2021
Date Signed:

LOCATION: BISHOP, CALIFORNIA

BISHOP SERVICE CENTER
SITE DEVELOPEMENT
WATER TANK DETAILS

VOLUME 1

SOUTHERN CALIFORNIA EDISON An EDISON INTERNATIONAL Company

SHEET NO. C5.4a
SCALE: AS NOTED
30 OF 66 SHTS.

100% CONSTRUCTION DOCUMENTS (12-03-2021)

Drawings: P:\219-0301\Site\production\drawings\01 - Site\Water Tank Details.dwg; C5.4a Water Tank Details - BCF.ctb
Plot by: jredelfs Feb 23, 2022 - 7:36pm

SOUTHERN CALIFORNIA EDISON
2012 - S SIZE

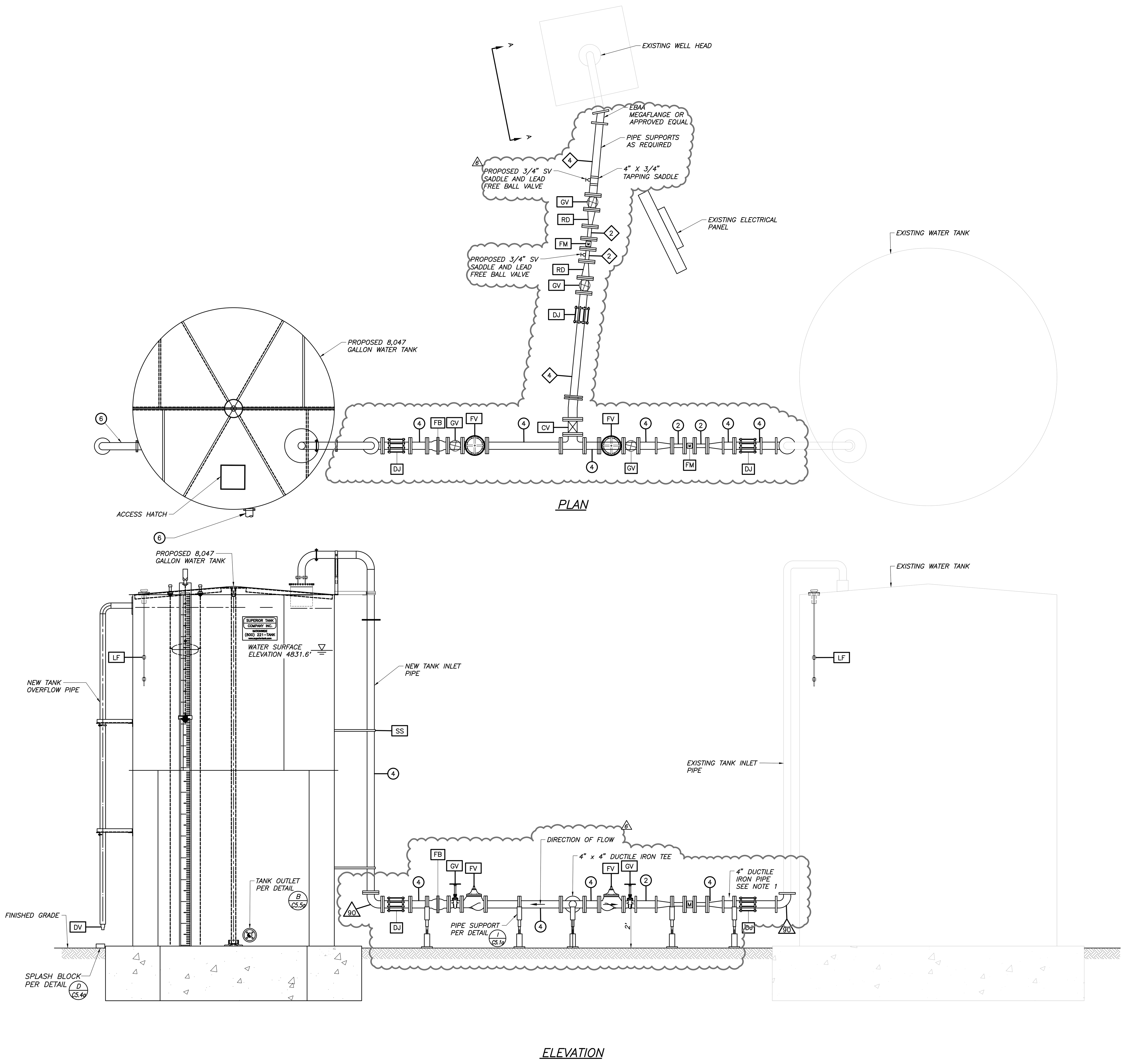

A PIPE CONNECTION DETAILS
C5.5a
NOT TO SCALE

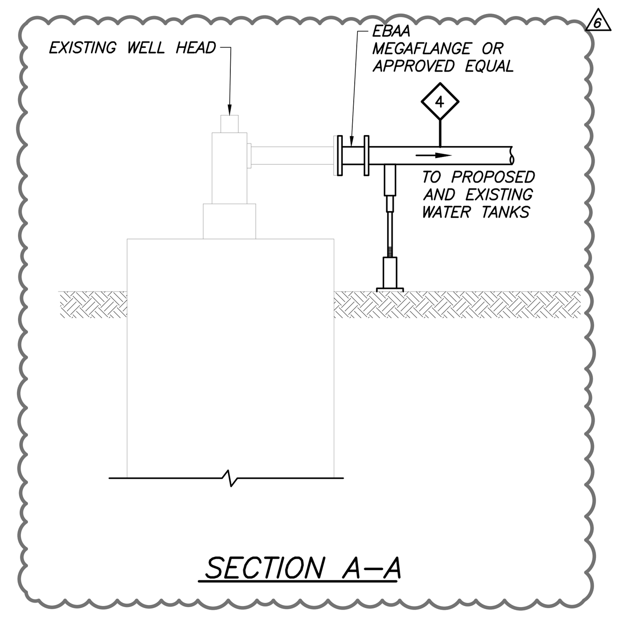

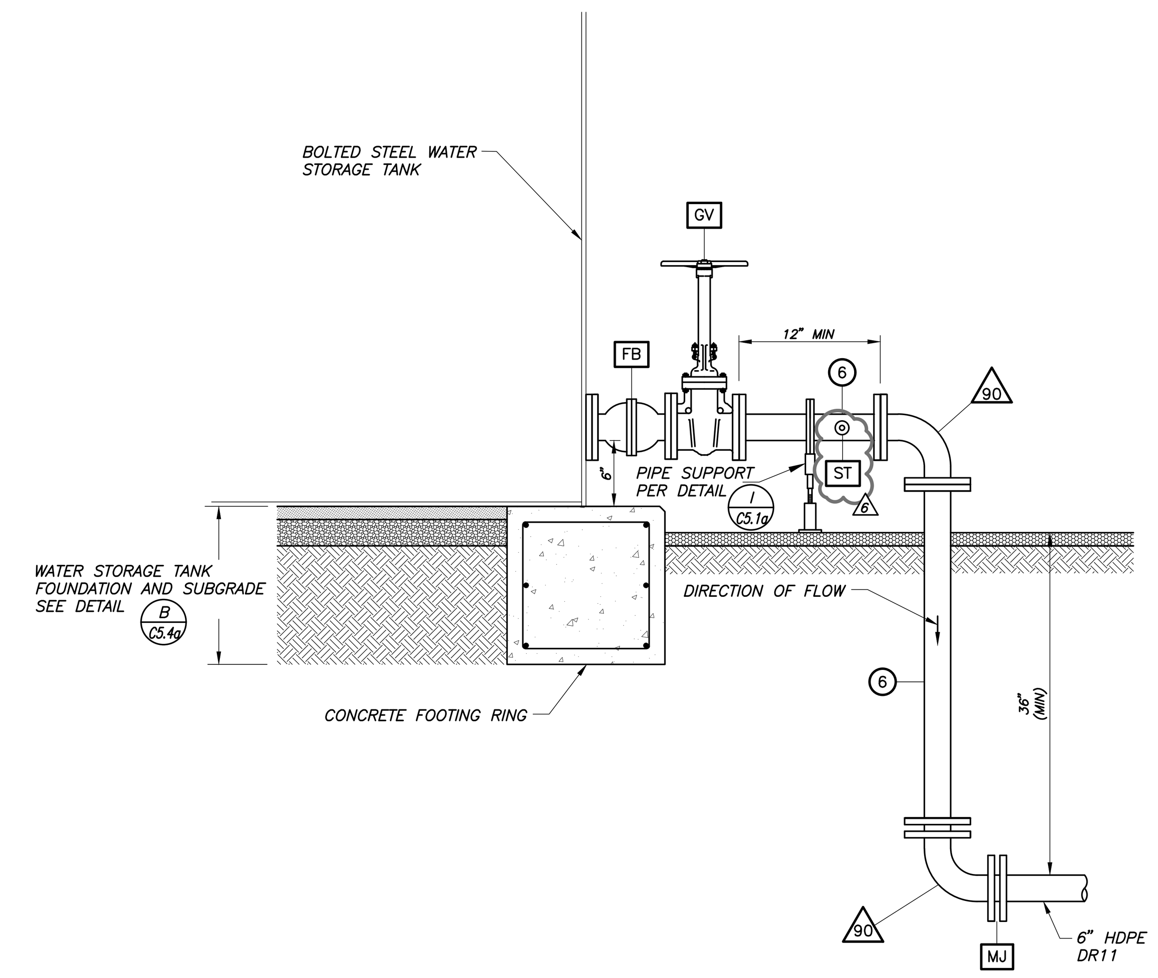

B TANK OUTLET – TRANSMISSION WATER LINE
C5.5a
NOT TO SCALE

APPARATUS

CV	CHECK VALVE, MUELLER A-2600, OR APPROVED EQUAL
DV	DUCKBILL CHECK VALVE, ONYX VALVE CO, SERIES DBS OR APPROVED EQUAL
DJ	DISMANTLING JOINT, ROMAC DJ405 OR APPROVED EQUAL
FB	FLEXIBLE BALL JOINT, EBAA IRON FLEX-900 OR APPROVED EQUAL
FM	2" MAGNETIC FLOW METER, ROSEMOUNT 8750W FLOWMETER SYSTEM OR APPROVED EQUAL
FV	FLOAT VALVE, FLOMATIC C801-2 OR APPROVED EQUAL
GV	4" FLANGED RESILIENT WEDGE NRS GATE VALVE WITH HAND WHEEL, AMERICAN SERIES 2500 OR APPROVED EQUAL.
LF	FPI TWO LEVEL FLOAT SENSOR, FLOAT WITH TURBULANCE SHIELD
MJ	MECHANICAL JOINT ADAPTER, DIPS DRISCOPLEX HDPE MOLDED FITTINGS OR APPROVED EQUAL
MJ2	MECHANICAL JOINT RESTRAINT, EBAA IRON 2000PV SERIES MEGALUG OR APPROVED EQUAL
RD	CONCENTRIC REDUCER (4"X2")
SS	STEEL STRAPS ATTACHED TO TANK WALL
SV	SAMPLE VALVE, DIXON MODEL BSVS-OC400B025 OR APPROVED EQUAL

FITTINGS

90	90° ELBOW

PIPE

4 (circle)	DUCTILE IRON PIPE, SIZE AS NOTED.
4 (diamond)	C900 DR 18 PVC PIPE OR HDPE DR 11, SIZE AS NOTED.

NOTES

1. CONTRACTOR TO VERIFY EXISTING PIPE SIZE
2. ALL PIPES, FITTINGS, VALVES AND OTHER INLINE APPARATUS SHALL BE CLASS 150.
3. ALL ABOVEGROUND EXTERIOR PIPING SHALL BE INSULATED PER DETAIL K/C5.1a
4. ALL UNDERGROUND BENDS OVER 11° SHALL HAVE THRUST BLOCKS, PER DETAIL J/C6.4a
5. CONTROLS FOR THE EXISTING WATER TANK SHOULD BE VERIFIED AND ENGINEER NEEDS TO BE NOTIFIED PRIOR TO CONTRACTOR PROCURING MATERIAL AND SETTING CONTROLS FOR THE PROPOSED TANK

PLANS PREPARED BY:
Blair, Church & Flynn
CONSULTING ENGINEERS
451 Clovis Avenue, Suite 200
Clovis, California 93612
Tel (559) 326-1400
Fax (559) 326-1500

REGISTERED PROFESSIONAL ENGINEER PAIGE E. NOGA No. 78,395 CIVIL STATE OF CALIFORNIA
5/2/2022
Date Signed:

NO.	REVISIONS	DATE	SAP WO	SUPV	APPROVED	ENGR	CK'D	MADE	P.E.
7	TRASH ENCLOSURE REVISIONS	07-20-2022				PN	PN	JR	PN

NO.	REVISIONS	DATE	SAP WO	SUPV	APPROVED	ENGR	CK'D	MADE	P.E.
1	ADDENDUM #1	03-19-2021				PN	PN	JR	PN
2	ENVIRONMENTAL HEALTH PLAN CHECK REVISIONS	06-18-2021				PN	PN	JR	PN
3	ADDENDUM #2	12-03-2021				PN	PN	JR	PN
4	ADDENDUM #3	02-18-2022				PN	PN	JR	PN
5	FIRE DEPARTMENT INSPECTION REVISIONS	05-02-2022				PN	PN	JR	PN
6	STATE WATER BOARD REVISIONS	06-17-2022				PN	PN	JR	PN

REFERENCE DRAWINGS | REFERENCE DRAWINGS

LOCATION: BISHOP, CALIFORNIA

BISHOP SERVICE CENTER
SITE DEVELOPEMENT
WATER TANK DETAILS
VOLUME 1

SOUTHERN CALIFORNIA EDISON An EDISON INTERNATIONAL Company

SHEET NO. C5.5a
SCALE: AS NOTED
31 OF 66 SHTS.

100% CONSTRUCTION DOCUMENTS (06-17-2022)

SOUTHERN CALIFORNIA EDISON
2012 - 5 SIZE

NOTES:
1. INSTALL WEAKENED PLANE JOINTS EVERY 15' AND EXPANSION JOINTS EVERY 45'
2. FILL JOINT AT EXPANSION WITH MOLDED JOINT FILLER
3. SEE SPECIFICATIONS FOR CONCRETE DESIGN REQUIREMENTS

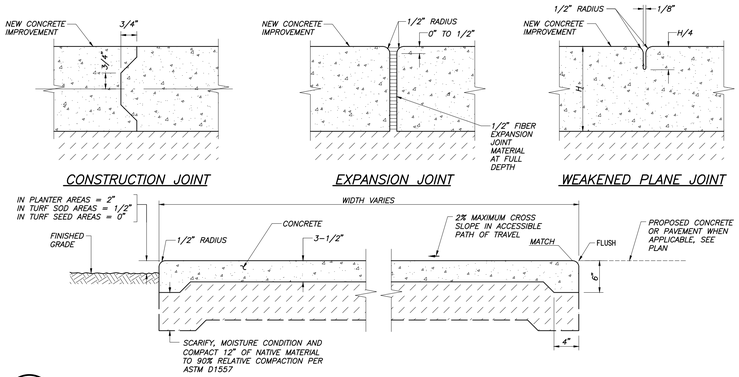

A C6.0a CONCRETE SIDEWALK
NOT TO SCALE

NOTES:
1. INSTALL WEAKENED PLANE JOINTS EVERY 12.5' AND EXPANSION JOINTS EVERY 50'
2. FILL JOINT AT EXPANSION WITH MOLDED JOINT FILLER
3. SEE SPECIFICATIONS FOR CONCRETE DESIGN REQUIREMENTS

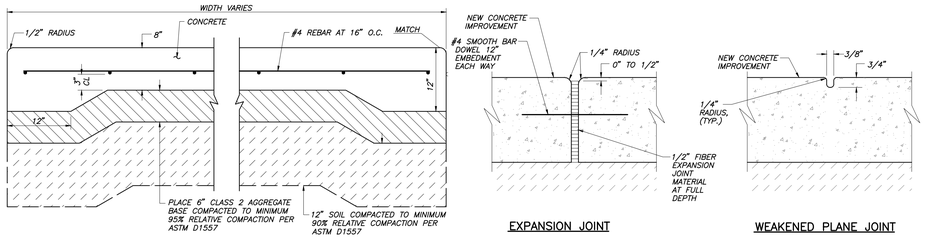

B C6.0a HEAVY DUTY CONCRETE
NOT TO SCALE

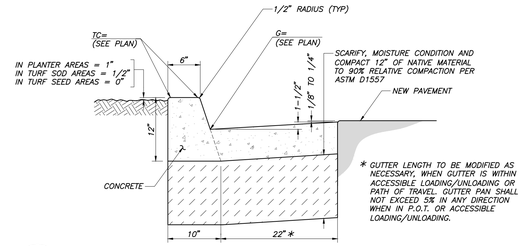

C C6.0a CONCRETE CURB AND GUTTER
NOT TO SCALE

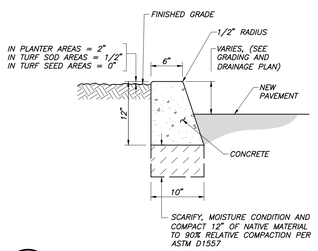

D C6.0a CONCRETE CURB
NOT TO SCALE

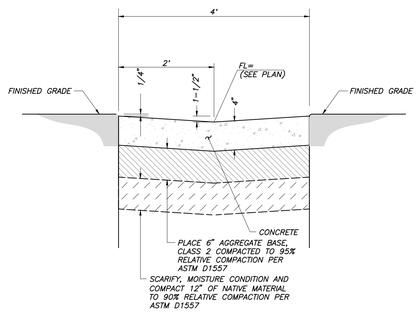

E C6.0a CONCRETE VALLEY GUTTER
NOT TO SCALE

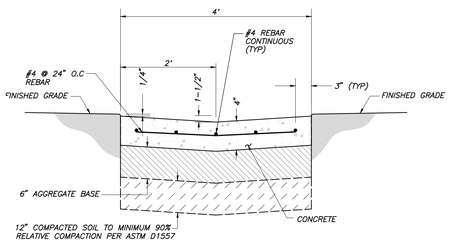

F C6.0a REINFORCED CONCRETE VALLEY GUTTER
NOT TO SCALE

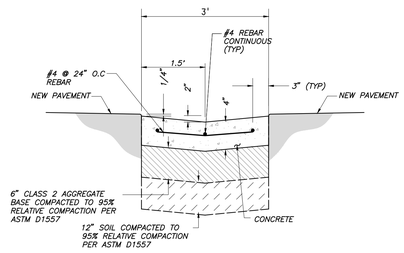

G C6.0a 3' REINFORCED CONCRETE VALLEY GUTTER
NOT TO SCALE

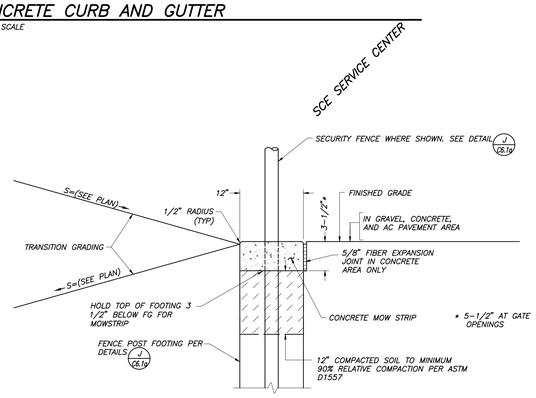

H C6.0a CONCRETE MOWSTRIP
NOT TO SCALE

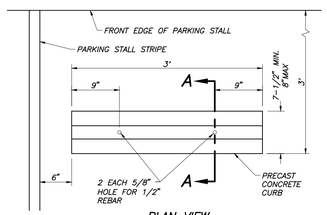

PLAN VIEW

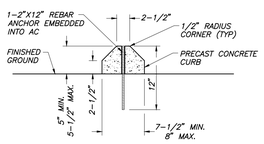

SECTION A–A

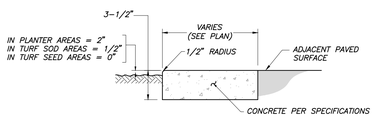

I C6.0a CONCRETE MOWSTRIP
NOT TO SCALE

J C6.0a CONCRETE WHEELSTOP
NOT TO SCALE

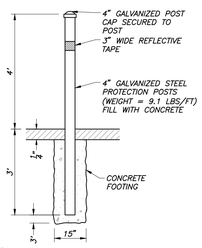

K C6.0a BOLLARD
NOT TO SCALE

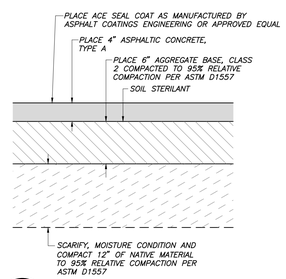

L C6.0a PAVEMENT SECTION
NOT TO SCALE

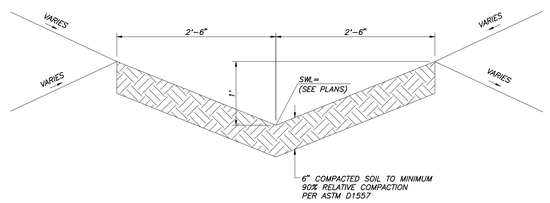

M C6.0a EARTHEN SWALE
NOT TO SCALE

NOTES:

1. THE DETECTABLE WARNING SHALL VISUALLY CONTRAST 70% WITH ADJOINING SURFACES, EITHER LIGHT-ON-DARK OR DARK-ON-LIGHT. THE MATERIAL USED SHALL BE A INTEGRAL PART OF THE WALKING SURFACE.
2. THE DOMES MAY BE CAST-IN-PLACE, STAMPED, OR PART OF A PREFABRICATED SURFACE TREATMENT.
3. ONLY APPROVED DSA/AC DETECTABLE WARNING PRODUCTS AND DIRECTIONAL SURFACES SHALL BE INSTALLED AS PROVIDED IN THE CALIFORNIA CODE OF REGULATIONS (CCR), TITLE 24, PART 1, ARTICLES 2, 3 AND 4.
4. MAXIMUM SLOPES OF ADJOINING GUTTERS, THE ROAD SURFACE IMMEDIATELY ADJACENT TO THE CURB RAMP OR ACCESSIBLE ROUTE SHALL NOT EXCEED 5 PERCENT WITHIN 4'-0" OF THE TOP AND BOTTOM OF THE CURB RAMP.

SECTION

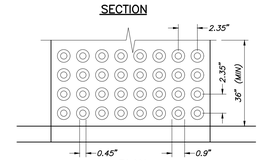

PLAN

N C6.0a DETECTABLE WARNINGS AND GROOVES
NOT TO SCALE

PLANS PREPARED BY:
Blair, Church & Flynn
CONSULTING ENGINEERS
481 Clovis Avenue, Suite 200
Clovis, California 93612
Tel (559) 326-1400
Fax (559) 326-1300

REGISTERED PROFESSIONAL ENGINEER
STAGE E. NOGA
No. 78,395
CIVIL
STATE OF CALIFORNIA
12/3/2021
Date Signed:

NO.	REVISIONS	DATE	SAP WO	SUPV	APPROVED	ENGR	CK'D	MADE	P.E.
1	ADDENDUM #1	03-19-2021				PN	PN	JR	PN
2	ENVIRONMENTAL HEALTH PLAN CHECK REVISIONS	06-18-2021				PN	PN	JR	PN
3	ADDENDUM #2	12-03-2021				PN	PN	JR	PN
4	ADDENDUM #3	02-18-2022				PN	PN	JR	PN

REFERENCE DRAWINGS | REFERENCE DRAWINGS | NO. | REVISIONS | DATE | SAP WO | SUPV | APPROVED | ENGR | CK'D | MADE | P.E.

LOCATION: BISHOP, CALIFORNIA

BISHOP SERVICE CENTER
SITE DEVELOPEMENT
DETAILS

VOLUME 1

SOUTHERN CALIFORNIA EDISON
An EDISON INTERNATIONAL Company

SHEET NO.
C6.0a
SCALE: AS NOTED
32 OF 66 SHTS.

100% CONSTRUCTION DOCUMENTS (12-03-2021)

Drawing: P:\219-030\Site\productionDrawings\01 - SiteDetails.dwg; C6.0a Details - BDF.ctb
Plotted: Feb 22, 2022 - 7:13am

SOUTHERN CALIFORNIA EDISON
2012 - 5 SIZE

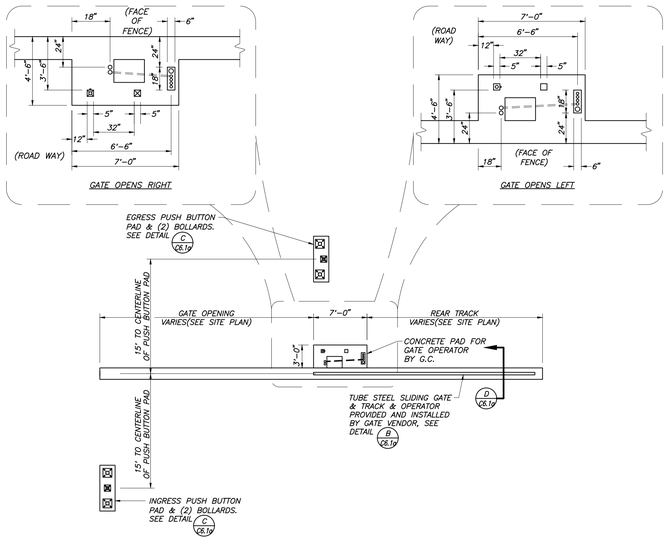

A C6.1a SLIDING GATE DETAIL
NOT TO SCALE

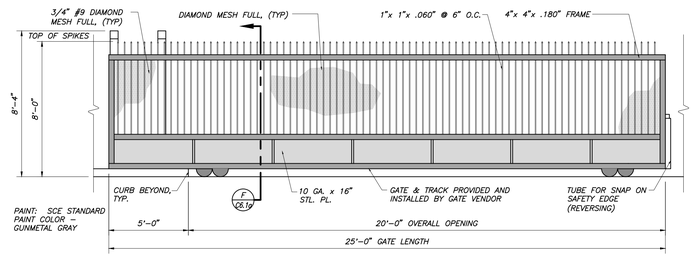

B C6.1a SLIDING GATE ELEVATION
NOT TO SCALE

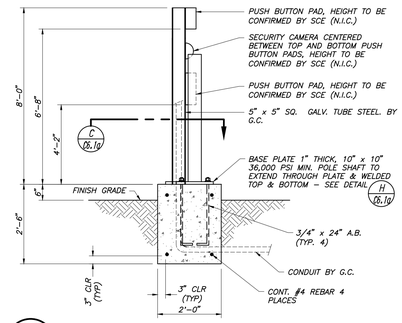

E C6.1a PUSH BUTTON PAD SECTION
NOT TO SCALE

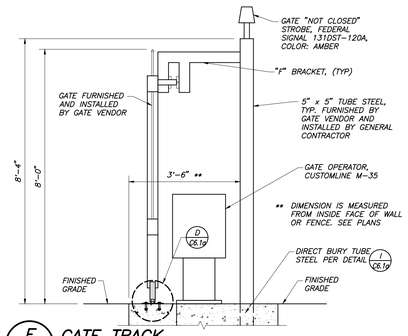

F C6.1a GATE TRACK
NOT TO SCALE

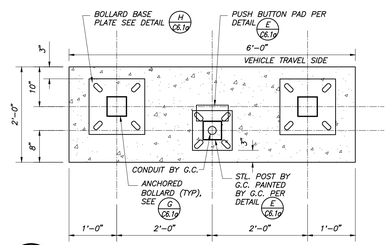

C C6.1a PUSH BUTTON PAD PLAN VIEW
NOT TO SCALE

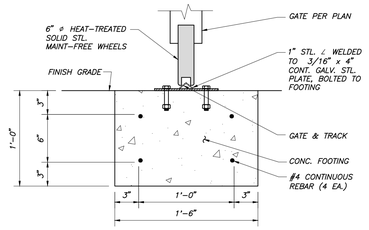

D C6.1a GATE TRACK FOUNDATION
NOT TO SCALE

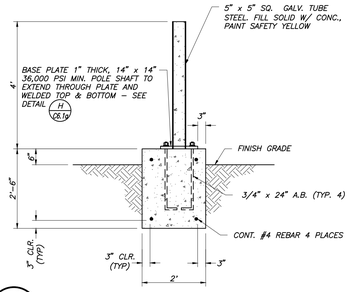

G C6.1a ANCHORED BOLLARD
NOT TO SCALE

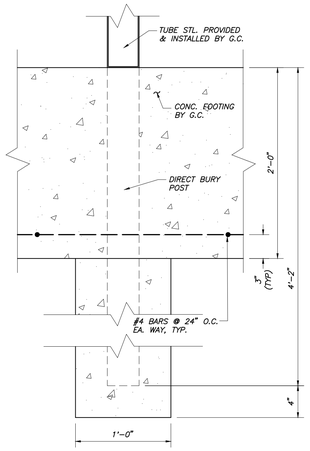

I C6.1a GATE BRACE TUBE STEEL
NOT TO SCALE

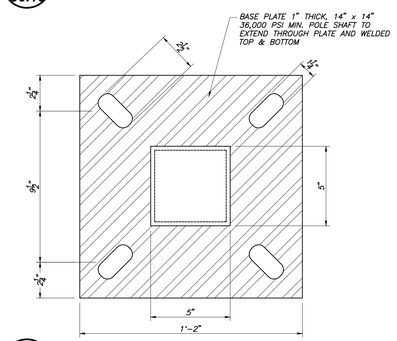

H C6.1a BOLLARD BASE PLATE
NOT TO SCALE

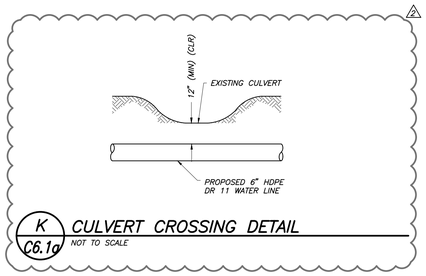

K C6.1a CULVERT CROSSING DETAIL
NOT TO SCALE

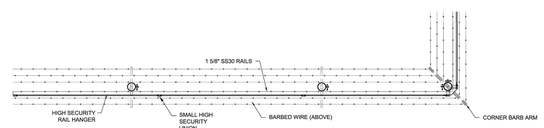

2 TYPICAL PLAN
SCALE: NTS

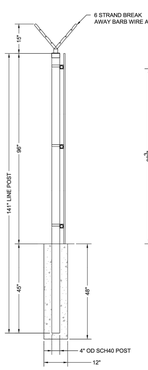

3 TYPICAL SECTION
SCALE: NTS

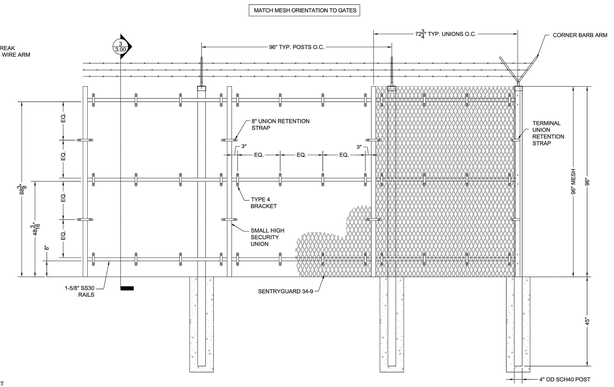

1 TYPICAL ELEVATION
SCALE: NTS

J C6.1a SECURITY FENCE: GUARGIAN 5000
NOT TO SCALE

G

BETAFENCE USA
Main: 972-879-7000 Fax: 214-807-4502
3308 S. I-45 ENNIS, TX 75119
www.BetafenceUSA.com

TYPICAL ELEVATION

FINISH	GALVANIZED FINISH
APPROVED BY	
DATE	
REVIEWER	
DRAWER	JJR
DATE	12/03/21
REV #	00/00-00

PROJECT: EDISON - PORTERVILLE
CUSTOMER: SCHOOL EDISON
SGI: SGI0000XXX
GRID: 0000

SHEET 3.00

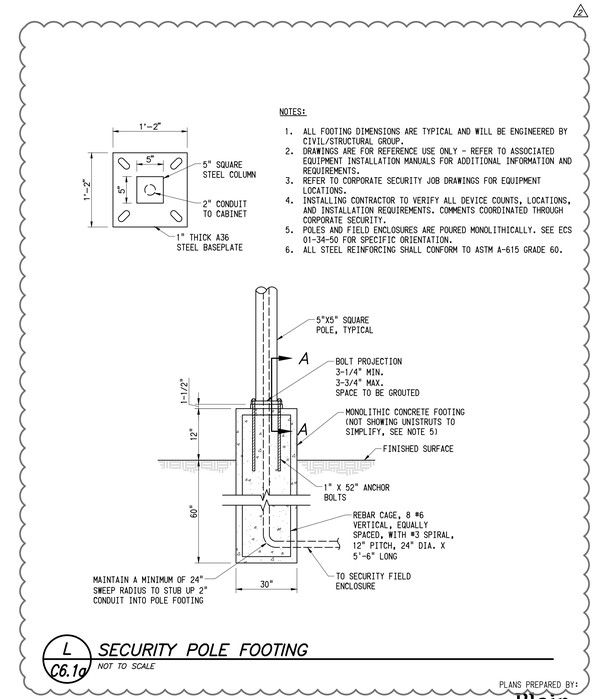

NOTES:

1. ALL FOOTING DIMENSIONS ARE TYPICAL AND WILL BE ENGINEERED BY CIVIL/STRUCTURAL GROUP.
2. DRAWINGS ARE FOR REFERENCE USE ONLY - REFER TO ASSOCIATED EQUIPMENT INSTALLATION MANUALS FOR ADDITIONAL INFORMATION AND REQUIREMENTS.
3. REFER TO CORPORATE SECURITY JOB DRAWINGS FOR EQUIPMENT LOCATIONS.
4. INSTALLING CONTRACTOR TO VERIFY ALL DEVICE COUNTS, LOCATIONS, AND INSTALLATION REQUIREMENTS. COMMENTS COORDINATED THROUGH CORPORATE SECURITY.
5. POLES AND FIELD ENCLOSURES ARE POURED MONOLITHICALLY. SEE ECS 01-34-50 FOR SPECIFIC ORIENTATION.
6. ALL STEEL REINFORCING SHALL CONFORM TO ASTM A-615 GRADE 60.

L C6.1a SECURITY POLE FOOTING
NOT TO SCALE

PLANS PREPARED BY:

REGISTERED PROFESSIONAL ENGINEER
PAGE E. NOCK
No. 78,395
CIVIL
STATE OF CALIFORNIA
12/3/2021
Date Signed:

Blair, Church & Flynn
CONSULTING ENGINEERS
4551 Glenn Avenue, Suite 200
Clovis, California 93612
Tel (559) 326-5400
Fax (559) 326-1900

NO.	REVISIONS	DATE	SAP WO	SUPV	APPROVED	ENGR	CK'D	MADE	P.E.
1	ADDENDUM #1	03-19-2021				PN	PN	JR	PN
2	ENVIRONMENTAL HEALTH PLAN CHECK REVISIONS	06-18-2021				PN	PN	JR	PN
3	ADDENDUM #2	12-03-2021				PN	PN	JR	PN
4	ADDENDUM #3	02-18-2022				PN	PN	JR	PN

REFERENCE DRAWINGS | REFERENCE DRAWINGS | NO. | REVISIONS | DATE | SAP WO | SUPV | APPROVED | ENGR | CK'D | MADE | P.E.

LOCATION: BISHOP, CALIFORNIA

BISHOP SERVICE CENTER
SITE DEVELOPEMENT
DETAILS

VOLUME 1

SOUTHERN CALIFORNIA EDISON
An EDISON INTERNATIONAL Company

SHEET NO.
C6.1a
SCALE: AS NOTED
33 OF 66 SHTS.

100% CONSTRUCTION DOCUMENTS (12-03-2021)

Drawing: P:\219-0301\Site\productionDrawings\01 - Site\Details.dwg C6.1a Details - BCF.ctb
Plotted by: jrosales Feb 22, 2022 - 7:19pm

SOUTHERN CALIFORNIA EDISON
2012 - 5 SIZE

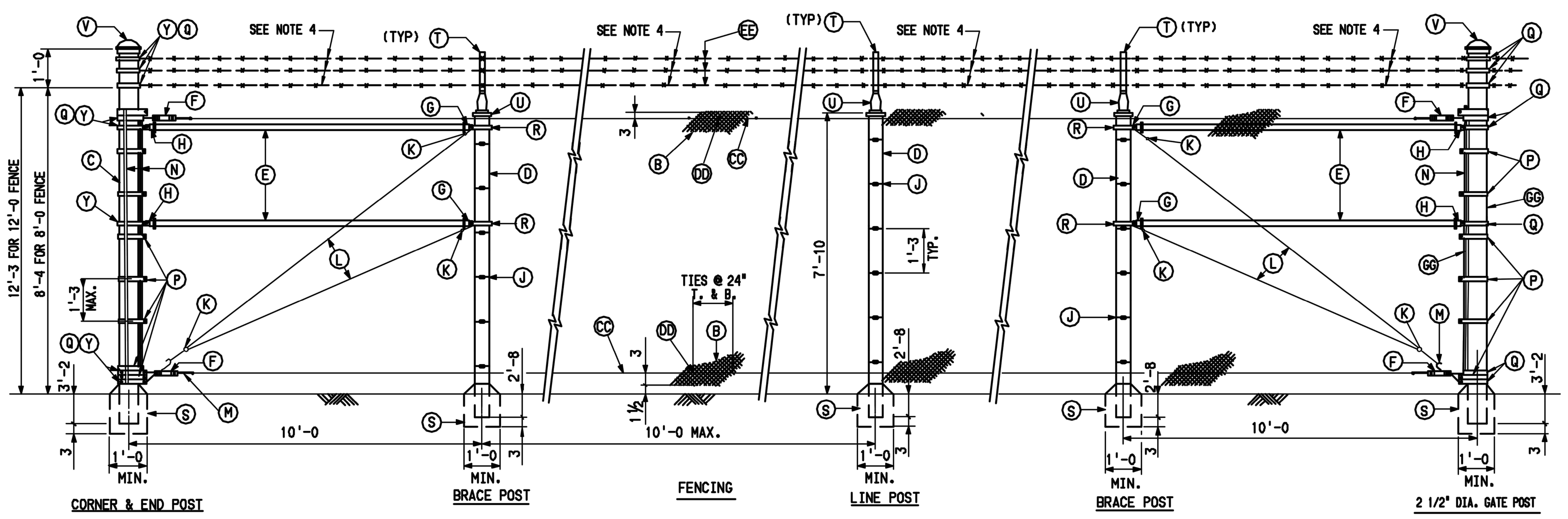

CORNER & END POST — DETAIL NO. 5

FENCING — DETAIL NO. 6

LINE POST — DETAIL NO. 7

BRACE POST / 2 1/2" DIA. GATE POST — DETAIL NO. 8A

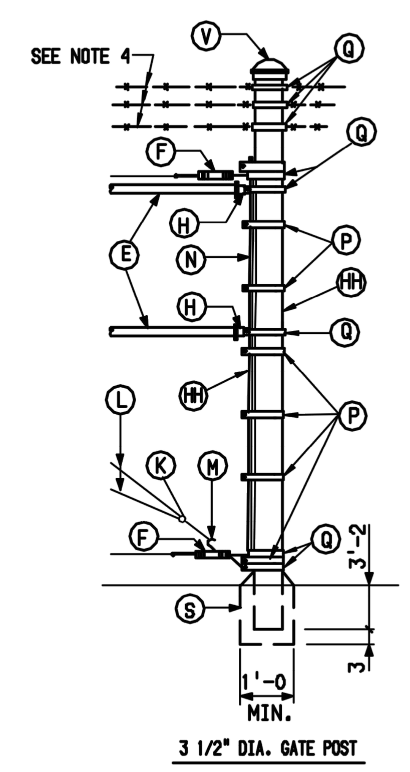

3 1/2" DIA. GATE POST — DETAIL NO. 8B

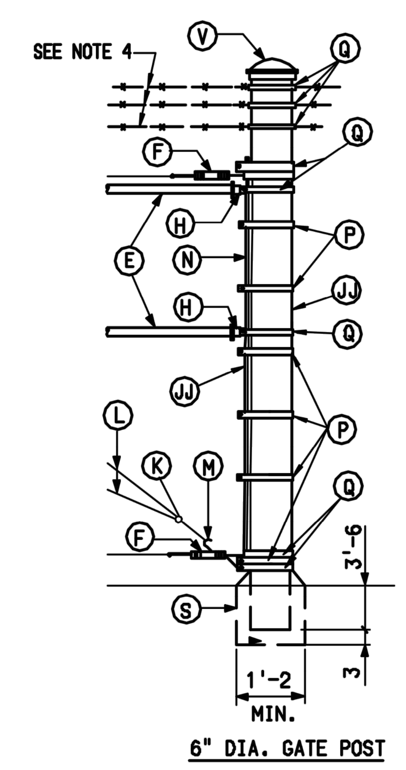

6" DIA. GATE POST — DETAIL NO. 8C

MATERIAL LIST	
ITEM	DESCRIPTION
B	CHAIN LINK FENCE FABRIC, 9 GAUGE GALV. STEEL WIRE, 2" x 2", 8'-0 HIGH
C	CORNER POSTS AND END POSTS 2½" DIA. PIPE FOR 8'-0 FENCE 3½" DIA. PIPE FOR 12'-0 FENCE
D	2" DIA. PIPE FOR 8'-0 FENCE
E	1¼" ø PIPE, RAIL
F	⅜" x 6" EYE & EYE TURNBUCKLE
G	RAIL END FOR 1¼" ø PIPE, 1⅝" ø O.D. W/ TENSION EYE
H	RAIL END FOR 1¼" ø PIPE, 1⅝" ø O.D.
J	9 GA. ALUMINUM TIE WIRE
K	CLIP, ¼" CROSBY WIRE ROPE
L	¼" GALV. STEEL STRAND OR APPROVED EQUAL
M	TRUSS ROD TIGHTENER (½" MIN. EYE BOLT W/HEX NUT 6" MIN. THREAD)
N	3/16" x ¾" TENSION BAR
P	TENSION BAND (⅛" x 1") FOR 2½" ø PIPE TENSION BAND (⅛" x 1") FOR 3½" ø PIPE TENSION BAND (⅛" x 1") FOR 6" ø PIPE

MATERIAL LIST	
ITEM	DESCRIPTION
Q	BRACE BAND (⅛" x 1") FOR 2½" ø PIPE BRACE BAND (⅛" x 1") FOR 3½" ø PIPE BRACE BAND (⅛" x 1") FOR 6" ø PIPE
R	BRACE BAND (⅛" x 1") FOR 2" ø PIPE
S	POST FOUNDATION, CONCRETE 2500 PSI @ 28 DAYS POST FOUNDATION CAP MAYBE SUBSTITUTED WITH GROUT
T	EXTENTION ARM FOR MOUNTING BARBED WIRE
U	BARBED WIRE ARM BASE, FOR 2" ø PIPE
V	POST CAP FOR 2½" ø PIPE POST CAP FOR 3½" ø PIPE POST CAP FOR 6" ø PIPE
W	POST CAP FOR 1 1/2" ø PIPE
X	1½" ø PIPE, 1'-6 LONG, GALV.
Y	CORNER BRACE BAND (⅛" x 1") FOR 2½" ø PIPE
CC	STIFFENER WIRE, 7 GAUGE GALV. STEEL WIRE
DD	ALUMINUM #4 TIE WIRE, 4" LONG OR HOG RING
EE	BARBED WIRE, 12½ GAUGE GALV. METAL
FF	#5 ASTM A615 GR. 60 BAR
GG	2½" DIA. PIPE, GATE POST
HH	3½" DIA. PIPE, GATE POST
JJ	6" DIA. PIPE, GATE POST

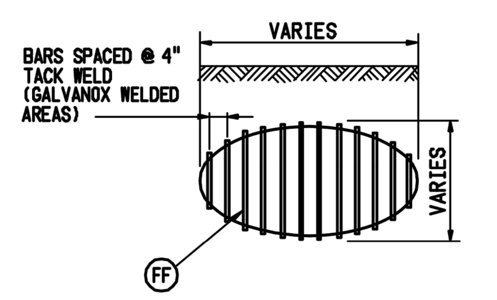

DETAIL 9-TYPICAL GUARD AT CORRUGATED METAL PIPE (NOTE 3)

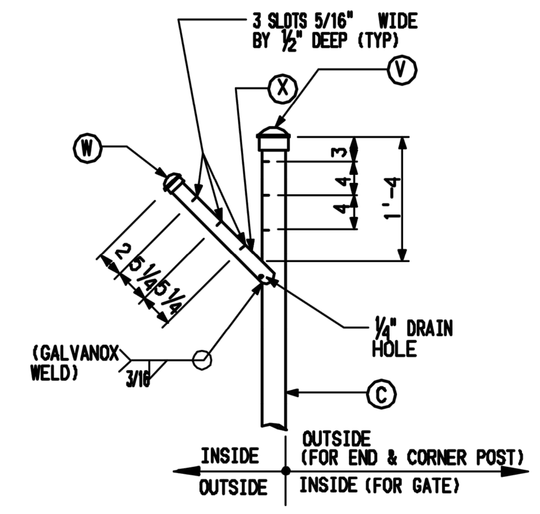

GATE, END & CORNER POST

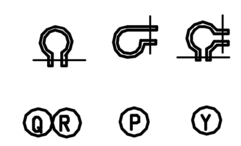

GENERAL OUTLINE OF BANDS

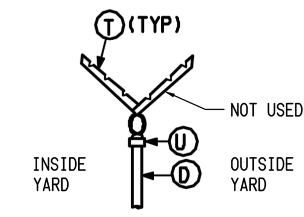

LINE POST

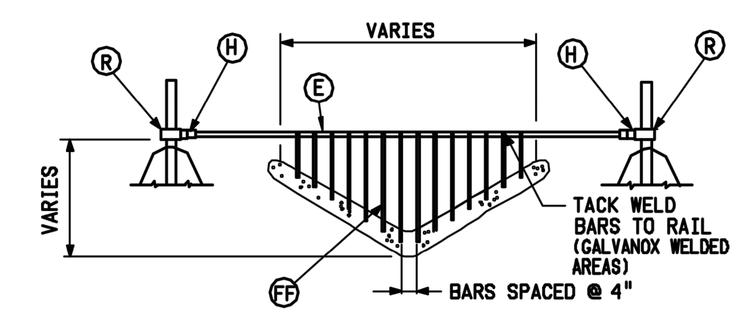

DETAIL 10-TYPICAL GUARD AT DRAINAGE DITCH (SEE NOTE 3)

FNC-8/12-MAT-B8023

GENERAL NOTES

1. ALL MATERIAL SHALL BE HOT DIP GALVANIZED.
2. FOR TOP AND BOTTOM TENSION WIRES (CC), PROVIDE ONE TURNBUCKLE FOR EACH RUN OF 300 FEET MAXIMUM.
3. AT LOCATIONS ALONG THE FENCE WHERE IT IS IMPOSSIBLE TO MAKE THE FENCE FABRIC CONFORM TO THE IRREGULARITIES OF THE EARTH'S SURFACE, SUCH AS DRAINAGE DITCHES, APPROVED GUARDS SHALL BE PROVIDED TO PREVENT ENTRY FROM UNDER THE FENCE. CORRUGATED METAL PIPING (8" DIA. AND ABOVE) WHICH EXTEND FROM THE INSIDE TO THE OUTSIDE OF SUBSTATION FENCING, SHALL BE EQUIPPED WITH GUARDS ON BOTH PIPE ENDS. SEE GRADING DRAWING FOR TYPICAL GUARD LOCATION.
4. ~~3 STRANDS OF BARBED WIRE OUTSIDE OF SUBSTATION AND 2~~ 3 STRANDS OF BARBED WIRE INSIDE. SEE SECTION "A-A" ECS 71-03-02,S4 TYPICAL ALL FENCES.
5. FOR ASSEMBLY CODES SEE ECS 71-03-01, S1.
6. ALL PIPE SIZES ARE NOMINAL. SEE TABLE 1 ON ECS 71-03-01, S1 FOR ACTUAL O.D.
7. ALL PIPE MAY BE SCHEDULE 40 OR TUF-40.
8. SEE ECS 71-03-02, S5 FOR GATE POST FOR ROLLING GATES.
9. INSTALL PRIVACY SLATS IN FENCING COLOR TO MATCH EXISTING PRIVACY SLATS.
10. INSTALL FENCE GROUNDING PER ELECTRICAL PLANS AND DETAILS.

SOUTHERN CALIFORNIA EDISON — An EDISON INTERNATIONAL Company

ECS71-03-01 S1	KEY TO CHAIN LINK FENCE ASSEMBLIES										
REFERENCE DRAWINGS		NO.	REVISIONS	DATE	SAP WO	SUPV	APPROVED	ENGR	CK'D	MADE	P.E.
		5	REDRAWN ON AUTOCAD			JTB	TT	DG		PGA	
		NO.	REVISIONS	DATE	SAP WO	SUPV	APPROVED	ENGR	CK'D	MADE	P.E.

ELECTRICAL CONSTRUCTION STATION — SCE INTERNAL —

8 AND 12 FT. HIGH CHAIN LINK FENCE WITH BARBED WIRE

FILE NAME: ECS710302SHS2 — SHEET S2 — REV. 5

SCALE: 1/4"=1'-0" — ECS — 71-03-02

A / C6.2a — SCE CHAIN LINK FENCE STANDARD — NOT TO SCALE

PLANS PREPARED BY: Blair, Church & Flynn CONSULTING ENGINEERS — 451 Clovis Avenue, Suite 200, Clovis, California 93612 — Tel (559) 326-1400 — Fax (559) 326-1500

REGISTERED PROFESSIONAL ENGINEER — PAIGE E. NOSA — No. 78,395 — CIVIL — STATE OF CALIFORNIA — 12/3/2021 Date Signed

NO.	REVISIONS	DATE	SAP WO	SUPV	APPROVED	ENGR	CK'D	MADE	P.E.
1	ADDENDUM #1	03-19-2021				PN	PN	JR	PN
2	ENVIRONMENTAL HEALTH PLAN CHECK REVISIONS	06-18-2021				PN	PN	JR	PN
3	ADDENDUM #2	12-03-2021				PN	PN	JR	PN
4	ADDENDUM #3	02-18-2022				PN	PN	JR	PN

REFERENCE DRAWINGS — REFERENCE DRAWINGS

LOCATION: BISHOP, CALIFORNIA

BISHOP SERVICE CENTER
SITE DEVELOPEMENT
DETAILS

VOLUME 1 — SHEET NO. C6.2a — SCALE: AS NOTED — 34 OF 66 SHTS.

SOUTHERN CALIFORNIA EDISON — An EDISON INTERNATIONAL Company

100% CONSTRUCTION DOCUMENTS (12-03-2021)

SOUTHERN CALIFORNIA EDISON
2012 - 5 SIZE

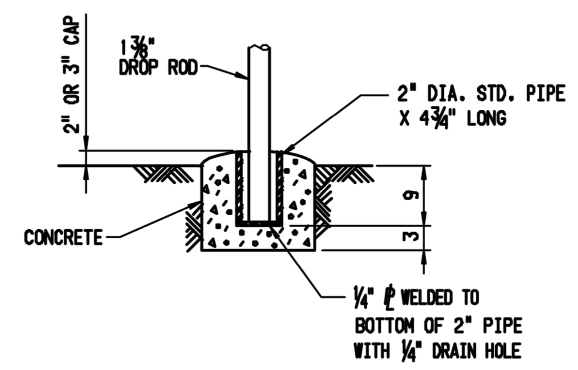

DROP ROD CUP DETAIL

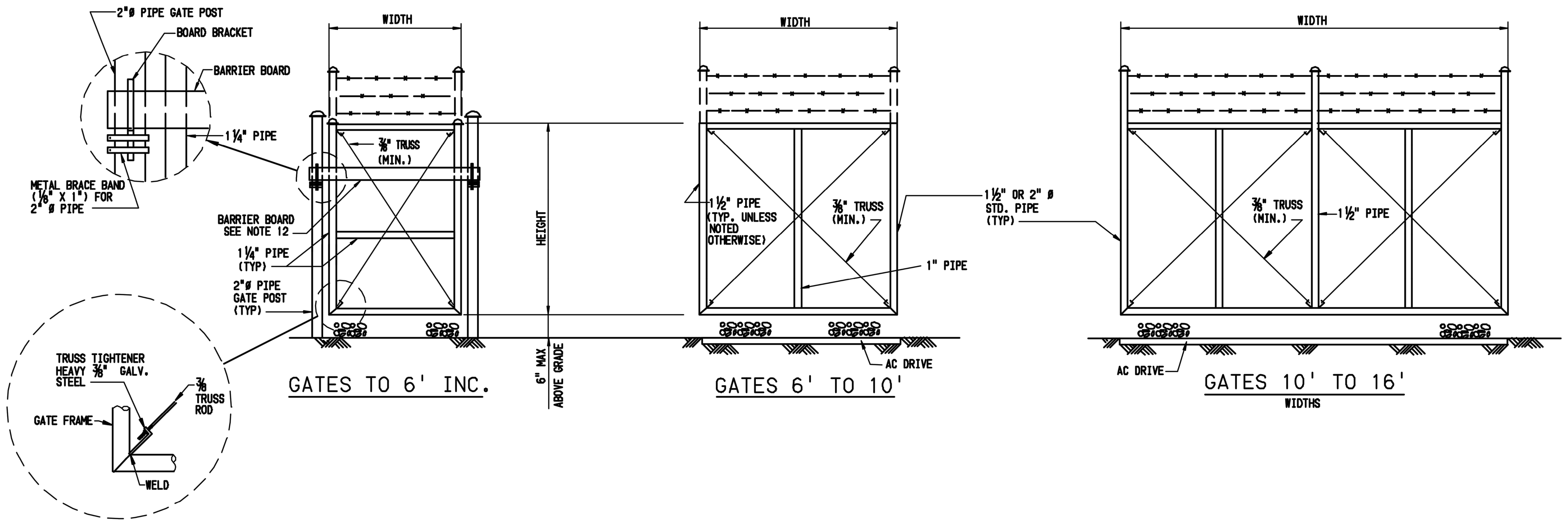

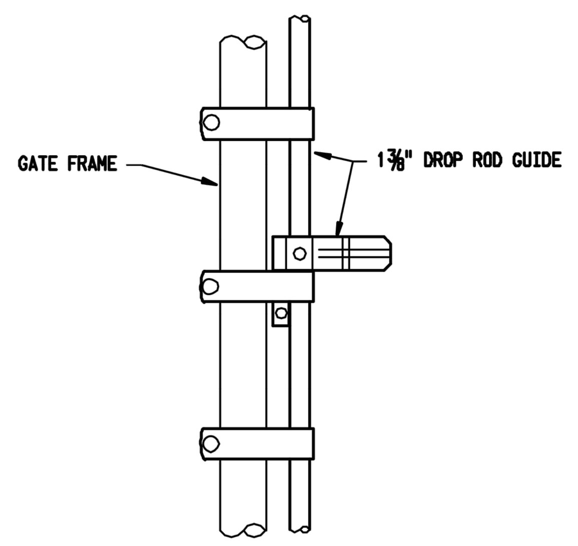

DROP ROD GUIDE AND LATCH ASSEMBLY

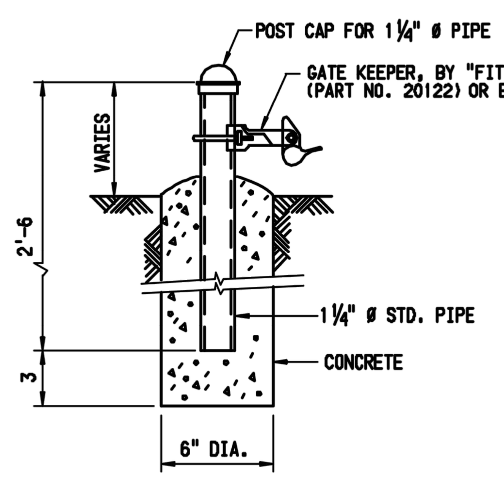

GATE STOP DETAIL

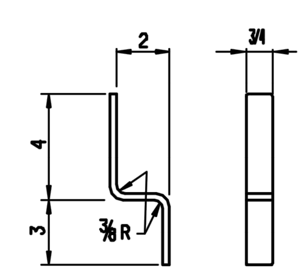

BOARD BRACKET

BENT ⅊ ¼ X ¾ X 0'-9¾

GENERAL NOTES

1. THE GATE WIDTH, EITHER SINGLE OR DOUBLE, SHALL BE DETERMINED BY THE FENCE OPENING. THE FENCE OPENING IS THE DISTANCE BETWEEN THE INSIDE FACE OF THE GATE POSTS.
2. THE TOP OF THE GATE IS THE SAME AS THE TOP OF THE FENCE FABRIC.
3. GATE STOP TO BE BY "FITTINGS THAT FIT" OR EQUAL. GATE HOLDBACKS ASSEMBLY- MALLEABLE, DUCKBILL TYPE
4. 2" PIPE WITH CANE STOP TO BE INSTALLED WHEN LATCHING DEVICE IS USED.
5. PROVIDE SLIP SLEEVE ASSEMBLY IN COMBINATION WITH LATCHING DEVICE.
6. GATES IN FENCES WHICH HAVE A BARBED WIRE EXTENSION SHOULD BE ORDERED WITH STRANDS OF BARBED WIRE. GATES SHOULD ALSO BE ORDERED COMPLETE WITH HINGES, LATCH & STOPS.
7. GATE POSTS FOR 4', 6', & 8' FENCES SHALL BE AS FOLLOWS:

GATE POSTS	SINGLE GATE WIDTH	DOUBLE GATE WIDTH	SLIDING GATE WIDTH
2"	TO 4 FT INCL	TO 8 FT INCL	———
2½"	OVER 4 FT TO 6 FT	OVER 8 FT TO 12 FT	TO 12 FT INCL
3½"	OVER 6 FT TO 13 FT	OVER 12 FT TO 26 FT	12 FT TO 26 FT
6"	OVER 13 FT TO 18 FT	OVER 26 FT TO 36 FT	OVER 26 FT

8. ALL MATERIAL IS TO BE HOT DIP GALVANIZED.
9. ALL FITTINGS (INCLUDING POST AND GATE HINGES) WHICH HAVE THREAD AND NUT PARTS EXPOSED SHALL BE WELDED TO THE GATE FRAME ON THE NUT END TO PREVENT REMOVAL BY THE USE OF HAND TOOLS.
10. FOR ROLLING GATES, REFER TO ECS 33-73-28, SH.1 FOR POSITION OF LINE POST WHICH WILL BE PLACED ADJACENT TO ROLLING GATE. THE CORRECT POSITIONING OF THIS LINE POST IS NECESSARY TO ACCOMODATE ENGAGEMENT OF GROUNDING CLIPS.
11. FOR LAYOUT OF FENCE, TOTAL LENGTH, NUMBER & LOCATION OF GATES, SEE FOUNDATION PLAN.
12. BARRIER BOARD TO BE MOUNTED ON GATE POST FOR 4 FOOT GATES AT CAPACITOR, OPERATING AND TRANSFER BUS CHAIN LINK FENCE ENCLOSURES.
13. ALL PIPE SIZES ARE NOMINAL. SEE TABLE 1 ON ECS 71-03-01, S1 FOR ACTUAL O.D.
14. ALL PIPE MAY BE SCHEDULE 40 OR TUF-40.

SOUTHERN CALIFORNIA EDISON
An EDISON INTERNATIONAL Company

REFERENCE DRAWINGS		NO.	REVISIONS	DATE	SAP WO	SUPV	APPROVED	ENGR	CK'D	MADE	P.E.
ECS71-03-02 S1	KEY TO CHAIN LINK FENCE ASSEMBLIES	4	REDRAWN ON AUTOCAD			JTB	TT	DG		PGA	

ELECTRICAL CONSTRUCTION STATION
— SCE INTERNAL —
GATE AND LATCHING DEVICE DETAILS
FILE NAME: ECS710302SHS3
SHEET S3
REV. 4
SCALE: 1/4"=1'-0"
ECS
71-03-02

A / C6.3a SCE CHAIN LINK GATE STANDARD
NOT TO SCALE

NO.	REVISIONS	DATE	SAP WO	SUPV	APPROVED	ENGR	CK'D	MADE	P.E.
1	ADDENDUM #1	03-19-2021				PN	PN	JR	PN
2	ENVIRONMENTAL HEALTH PLAN CHECK REVISIONS	06-18-2021				PN	PN	JR	PN
3	ADDENDUM #2	12-03-2021				PN	PN	JR	PN
4	ADDENDUM #3	02-18-2022				PN	PN	JR	PN

REFERENCE DRAWINGS | REFERENCE DRAWINGS

REGISTERED PROFESSIONAL ENGINEER — PAIGE E. NOGA — No. 78,395 — CIVIL — STATE OF CALIFORNIA
12/3/2021 Date Signed:

PLANS PREPARED BY: Blair, Church & Flynn CONSULTING ENGINEERS
451 Clovis Avenue, Suite 200 Clovis, California 93612 Tel (559) 326-1400 Fax (559) 326-1500

LOCATION: BISHOP, CALIFORNIA
BISHOP SERVICE CENTER
SITE DEVELOPEMENT
DETAILS
VOLUME 1
SHEET NO. C6.3a
SCALE: AS NOTED
35 OF 66 SHTS.

SOUTHERN CALIFORNIA EDISON An EDISON INTERNATIONAL Company

100% CONSTRUCTION DOCUMENTS (12-03-2021)

Drawing: P:\219-030\Site\production drawings\01 - Site\Details.dwg; C6.3a Details - BCF.ctb
Plot by: jredeifs Feb 23, 2022 - 7:37pm

SOUTHERN CALIFORNIA EDISON
2012 - 5 SIZE

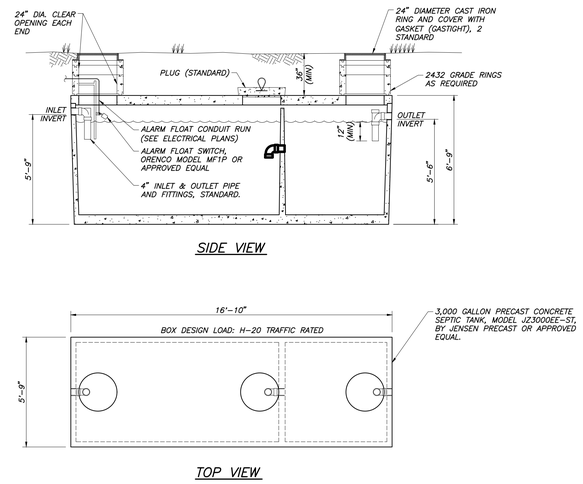

A C6.4a 3,000 GALLON SEPTIC TANK

NOT TO SCALE

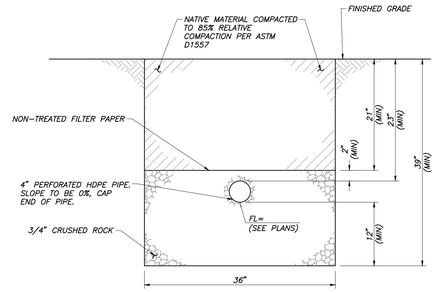

LEACH LINE NOTES:
1. LEACH LINES TO BE 6 FEET APART, O.C.
2. LENGTH OF LEACH LINES TO BE 100 FT.

B C6.4a LEACH LINE

NOT TO SCALE

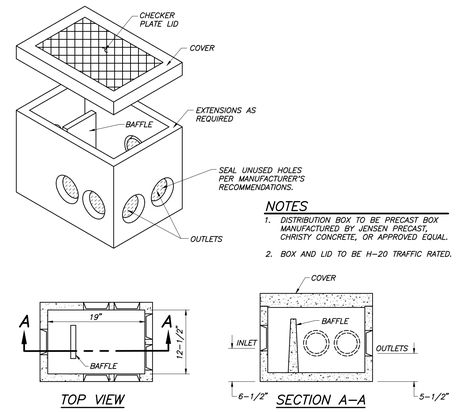

NOTES
1. DISTRIBUTION BOX TO BE PRECAST BOX MANUFACTURED BY JENSEN PRECAST, CHRISTY CONCRETE, OR APPROVED EQUAL.
2. BOX AND LID TO BE H-20 TRAFFIC RATED.

C C6.4a DISTRIBUTION BOX

NOT TO SCALE

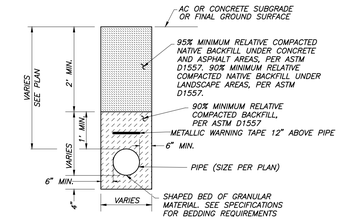

D C6.4a TRENCH DETAIL FOR UTILITY LINES

NOT TO SCALE

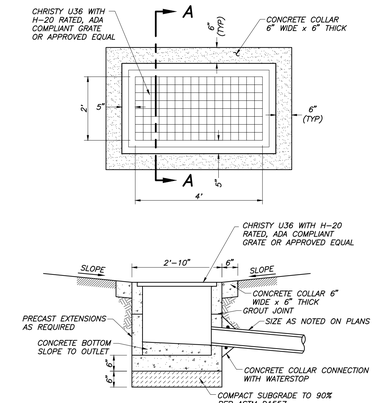

E C6.4a U-36 STORM DRAIN INLET

NOT TO SCALE

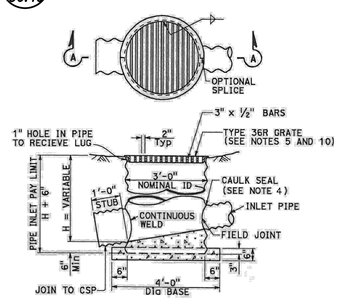

SECTION A-A

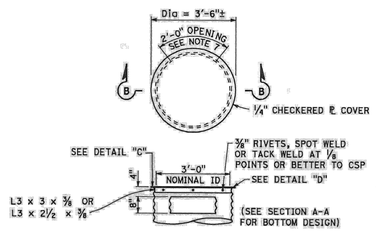

SECTION B-B
(SEE NOTE 2)

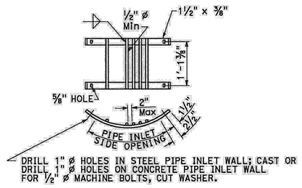

TRASH RACK DETAILS
(SEE NOTE 6 AND 7)

BASIS FOR Misc IRON AND STEEL FINAL PAY WEIGHTS FOR DRAINAGE INLETS

INLET TYPE	GRATE TYPE	No. OF GRATES	WEIGHT LB
GDO (SEE NOTE 4)	24-10C	2	391
	24-10S	2	456
	24-12X	2	473
	24-13	2	374
GO,GOL,G1,G2, G3,G4 (TYPE 24)	24-10C	1	202
	24-10S	1	229
	24-12X	1	239
	24-13	1	188
G4 (TYPE 18) G5,G6	18-8S	1	187
	18-9X	1	187
	18-10	1	149
GT1,GT2	18-8S	2	374
	18-9X	2	374
	18-10	2	298
GT3,GT4	24-10C	2	404
	24-10S	2	458
	24-12X	2	478
	24-13	2	376
ODI	36RX (Mod)	1	196
GMP,GCP,GCPI	36RX	1	215
ODI	36R (Mod)	1	220
GMP,GCP,GCPI	36R	1	236
TRASH RACK			22
GRATE CHAIN		1	3

GRATE BAR SPACING TABLE

TYPE	No. OF BARS	CLEAR BAR SPACING	X	Y 4" SPACING	Y 6" SPACING	Z
36R	13	2"	2 1/4"	-	-	-
36RX (STEEL)	15	2"	3/8"	3 3/4"	5 3/4"	-
36RX (CAST)	13	2"	2 1/8"	3 3/4"	5 3/4"	-
36R Mod	12	2"	2 1/8"	-	-	8"
36RX Mod (STEEL)	13	2"	3/8"	3 3/4"	5 3/4"	5 7/8"
36RX Mod (CAST)	12	2"	2 1/8"	3 3/4"	5 3/4"	8"

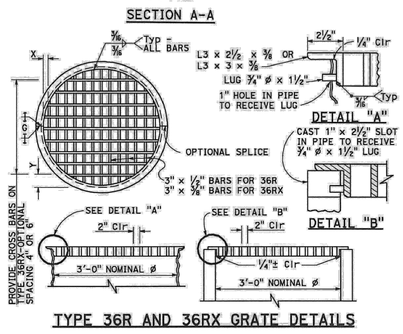

TYPE 36R AND 36RX GRATE DETAILS

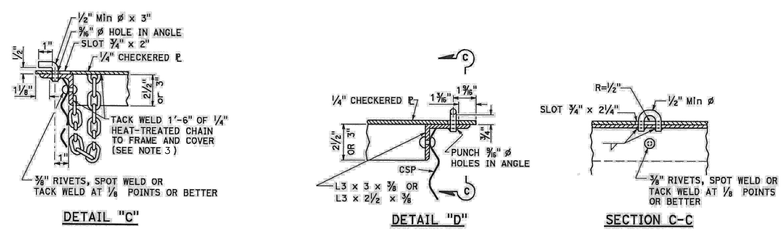

F C6.4a OMPI STEEL DRAIN INLET

NOT TO SCALE

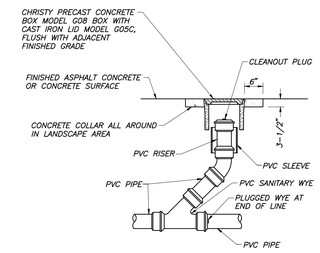

G C6.4a SURFACE CLEANOUT

NOT TO SCALE

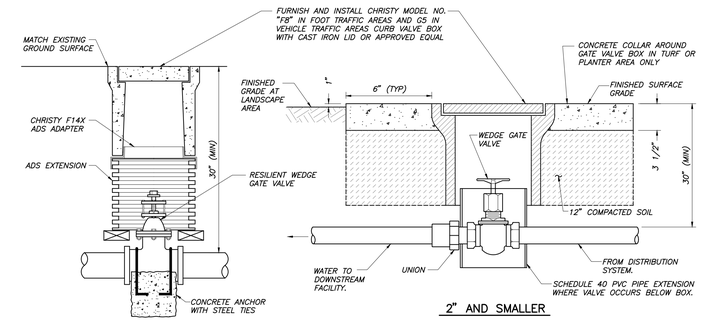

2.5" AND LARGER

2" AND SMALLER

H C6.4a GATE VALVE AND LID

NOT TO SCALE

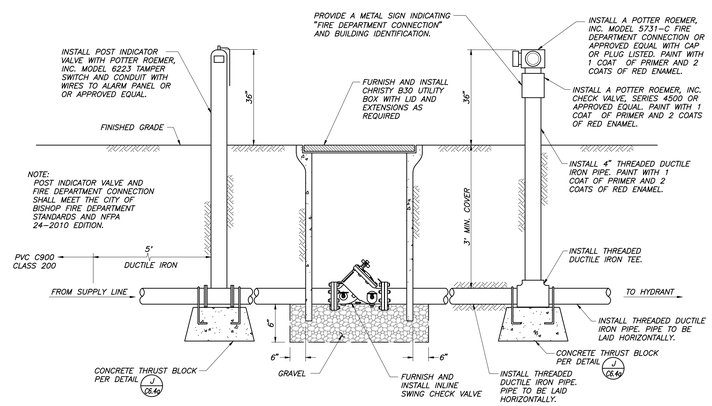

I C6.4a POST INDICATOR VALVE, CHECK VALVE AND FIRE DEPARTMENT CONNECTION

NOT TO SCALE

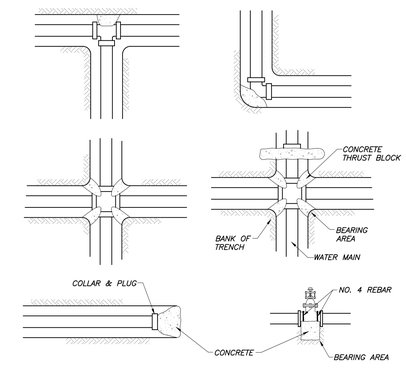

Table Of Bearing Areas Required (In Square Feet)					
Pipe Diameter	4" Or Smaller	6"	8	10	12
Cross, Tee, 90° Bend, Plug, Fire Hydrant	1	3	5	8	11
45° Bend	1	2	3	4	6
22 1/2° Bend	0.5	1	2	2	3
11 1/4° Bend	0	0	1	1	2
Valve	0	0	0	4	9

J C6.4a CONCRETE THRUST BLOCKS

NOT TO SCALE

NO.	REVISIONS	DATE	SAP WO	SUPV	APPROVED	ENGR	CK'D	MADE	P.E.
1	ADDENDUM #1	03-19-2021				PN	PN	JR	PN
2	ENVIRONMENTAL HEALTH PLAN CHECK REVISIONS	06-18-2021				PN	PN	JR	PN
3	ADDENDUM #2	12-03-2021				PN	PN	JR	PN
4	ADDENDUM #3	02-18-2022				PN	PN	JR	PN

REFERENCE DRAWINGS | REFERENCE DRAWINGS

PLANS PREPARED BY:
Blair, Church & Flynn
CONSULTING ENGINEERS
4551 Clovis Avenue, Suite 200
Clovis, California 93612
Tel (559) 326-1400
Fax (559) 326-1500

REGISTERED PROFESSIONAL ENGINEER DAVID E. NOJA No. 78,395 CIVIL STATE OF CALIFORNIA
12/3/2021 Date Signed

LOCATION: BISHOP, CALIFORNIA

BISHOP SERVICE CENTER
SITE DEVELOPEMENT
DETAILS

VOLUME 1

SOUTHERN CALIFORNIA EDISON An EDISON INTERNATIONAL Company

SHEET NO. C6.4a

SCALE: AS NOTED

36 OF 66 SHTS.

100% CONSTRUCTION DOCUMENTS (12-03-2021)

Drawing: P:\219-0301\Site\production\Drawings\01 - Site\Details\Dwgs C6.4a Details - BCF.ctb
Plot by: jfroehlich Apr 24, 2022 - 12:28pm

SOUTHERN CALIFORNIA EDISON
2012 - 5 SIZE

NOTE:
1. PLACE SIGNAGE ON EACH STORAGE RACK STATING "MAXIMUM LOADING NOT TO EXCEED 70 KIP".

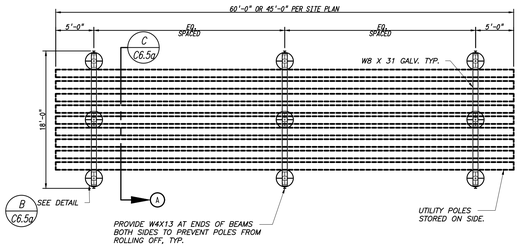

PLAN VIEW

A C6.5a POLE STORAGE RACK
NOT TO SCALE

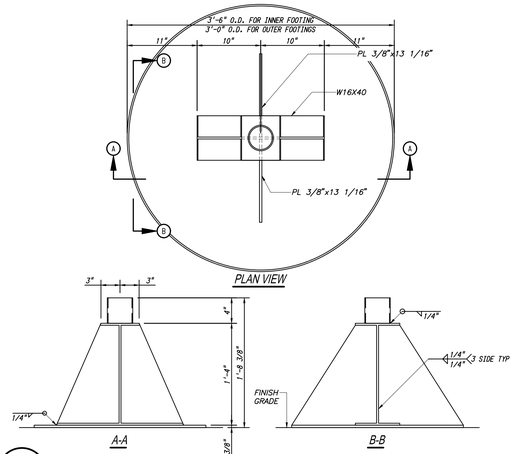

PLAN VIEW

A-A

B-B

B C6.5a MOVABLE POLE RACK STORAGE SUPPORT
NOT TO SCALE

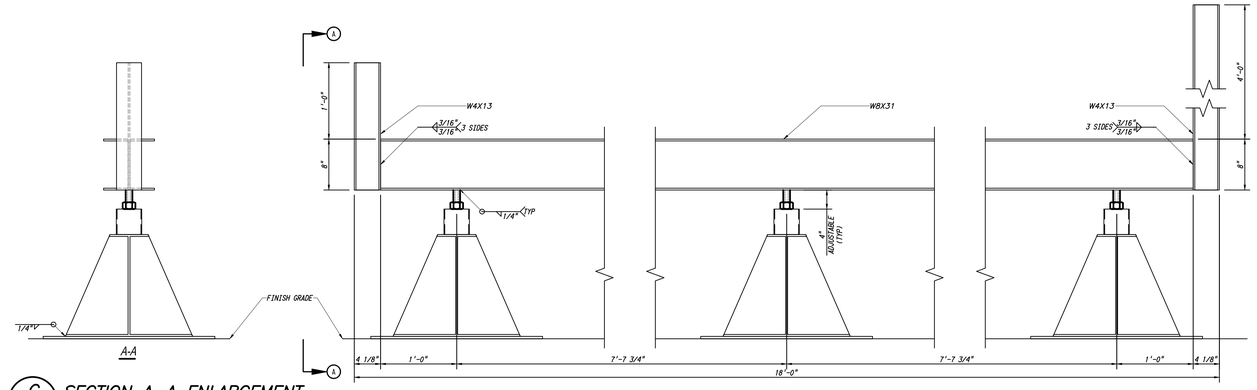

A-A

C C6.5a SECTION A–A ENLARGEMENT
NOT TO SCALE

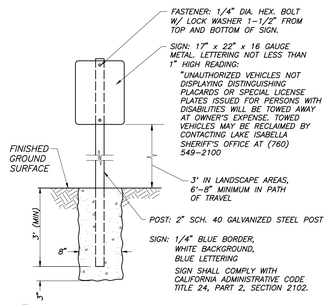

D C6.5a ENTRY SIGN
NOT TO SCALE

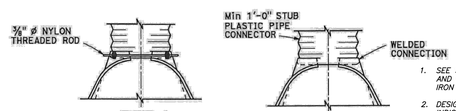

TYPE A
12" - 24"
PAVEMENT

TYPE B
30" - 36"

ALTERNATIVE CONNECTIONS FOR PIPE TO PLASTIC FLARED END SECTIONS

CIRCULAR PIPES						
PIPE Dia	END SECTION THICKNESS	DIMENSION				
		A	B	H	L	W
		1"±	Max	1"±	1½"±	2"±
12"*	0.064"	6"	6"	6"	1'-9"	2'-0"
15"*	0.064"	7"	8"	6"	2'-2"	2'-6"
18"*	0.064"	8"	10"	6"	2'-7"	3'-0"
21"	0.064"	9"	1'-0"	6"	3'-0"	3'-6"
24"*	0.064"	10"	1'-1"	6"	3'-5"	4'-0"
30"*	0.079"	1'-0"	1'-4"	8"	4'-3"	5'-0"
36"*	0.079"	1'-2"	1'-7"	9"	5'-0"	6'-0"
42"	0.109"	1'-4"	1'-10"	11"	5'-9"	7'-0"
48"	0.109"	1'-6"	2'-3"	1'-0"	6'-6"	7'-6"
54"	0.109"	1'-6"	2'-6"	1'-0"	7'-0"	8'-6"
60"	0.109"	1'-6"	2'-9"	1'-0"	7'-3"	9'-6"
66"	0.109"	1'-6"	3'-0"	1'-0"	7'-3"	10'-0"
72"	0.109"	1'-6"	3'-3"	1'-0"	7'-3"	10'-6"
78"	0.109"	1'-6"	3'-6"	1'-0"	7'-3"	11'-0"
84"	0.109"	1'-6"	3'-9"	1'-0"	7'-3"	11'-6"

* Equivalent plastic FES to meet AASHTO M-294 and ASTM D-1248 Specifications, and shall conform to all dimensions shown above except for end section thickness, which may be 0.004" thinner.

1. SEE STANDARD PLANS D77A AND D77B FOR GRATE AND FRAME DETAILS AND WEIGHTS OF MISCELLANEOUS IRON AND STEEL.
2. DESIGNATION OF TYPE OMPI PIPE INLETS ON PLANS INDICATES TRASH RACKS ARE TO BE FURNISHED AND INSTALLED ON ALL SIDE OPENINGS. SEE STANDARD PLAN D75C FOR TRASH RACK DETAILS.
3. CHAIN TO BE PROVIDED WHEN SPECIFIED.
4. CAULK SEAL WITH PLIABLE MIXTURE OF SAND, PORTLAND CEMENT, AND EMULSIFIED ASPHALT (MIXTURE OF 1 PART PORTLAND CEMENT, 3–5 PARTS SAND, AND 1 1/2" PARTS SSI EMULSIFIED ASPHALT).
5. PLACE PIPE SO BARS OF GRATE WILL BE PARALLEL WITH MAIN SURFACE.
6. TRASH RACKS USED ON TYPE OCPI AND OMPI INLETS. TRASH RACKS REQUIRED FOR PUMPING INSTALLATIONS.
7. ALL STEEL HARDWARE TO BE GALVANIZED AFTER FABRICATION. ALL HARDWARE TO BE ALUMINUM IF INSTALLED IN ALUMINUM PIPE INLET. SEE STANDARD SPECIFICATIONS OR SPECIAL PROVISIONS.
8. TOE PLATE TO BE AVAILABLE AS AN ACCESSORY WHEN SPECIFIED.

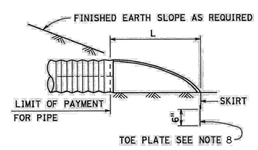

TYPICAL CROSS-SECTION

F C6.5a FLARED END SECTION
NOT TO SCALE

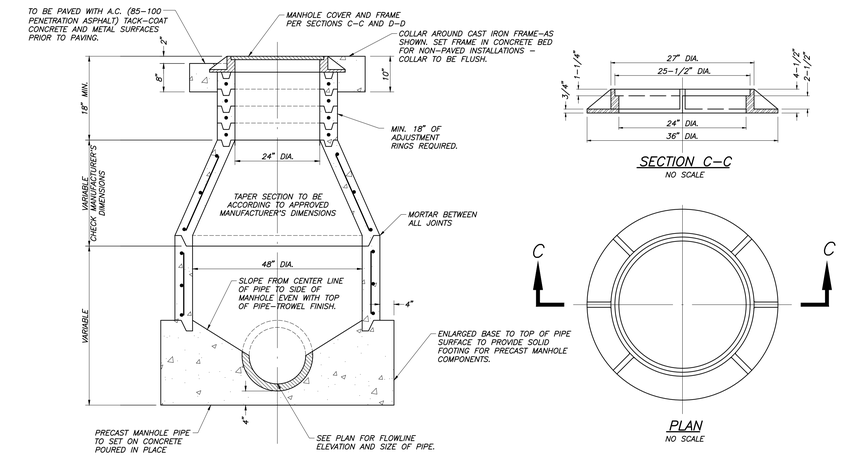

SECTION C–C
NO SCALE

PLAN
NO SCALE

NOTES:
1. ALL DIMENSIONS ARE FINISH DIMENSIONS.
2. MATERIAL SHALL BE CAST IRON.
3. FRAME AND COVER TO BE CONSTRUCTED IN ACCORDANCE WITH ASTM DESIGNATION A48, CLASS 25.
4. MANHOLE COVER DESIGNED AS A MINIMUM, IT IS TO HAVE THE WORDS "SANITARY SEWER" MOLDED INTO THE COVER.

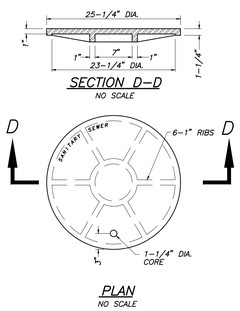

SECTION D–D
NO SCALE

PLAN
NO SCALE

H C6.5a SANITARY SEWER MANHOLE STRUCTURE DETAIL
NOT TO SCALE

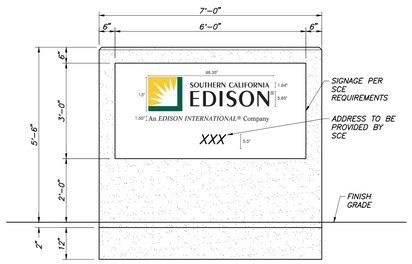

ELEVATION VIEW

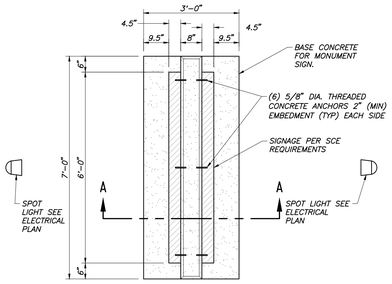

PLAN VIEW

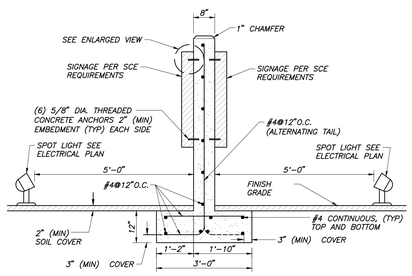

SECTION A–A

E C6.5a GENERATOR PAD
NOT TO SCALE

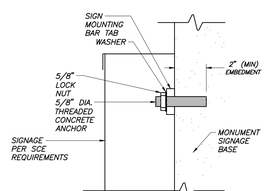

ENLARGED VIEW

NOTES:
1. (2) 72" x 36" x 4.5" SIGN BOXES TO BE PLACED ON CONCRETE MONUMENT MOUNTED USING CONCRETE ANCHORS – 3 ACROSS THE TOP AND 3 ACROSS THE BOTTOM 2" (MIN) EMBEDMENT DEPTH INTO MONUMENT BASE
2. SHOEBOX CABINET CASE MADE FROM .090 ALUMINUM PAINTED WHITE
3. APPROXIMATE WEIGHT OF SHOEBOX SIGNAGE CABINET CASE IS 54 LB
4. CONCRETE SHALL HAVE A MINIMUM 28-DAY COMPRESSIVE STRENGTH OF 3,000 PSI.
5. REINFORCING STEEL SHALL BE DEFORMED BARS GRADE 60 WITH A MINIMUM YIELD STRENGTH OF 60,000 PSI.

G C6.5a MONUMENT SIGN
NOT TO SCALE

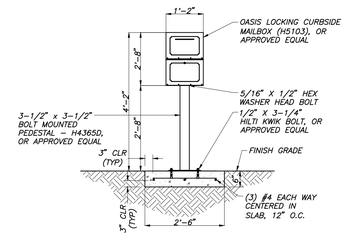

I C6.5a LOCKING CURBSIDE MAILBOX
NOT TO SCALE

REFERENCE DRAWINGS	REFERENCE DRAWINGS	NO.	REVISIONS	DATE	SAP WO	SUPV	APPROVED	ENGR	CK'D	MADE	P.E.
		1	ADDENDUM #1	03-19-2021				PN	PN	JR	PN
		2	ENVIRONMENTAL HEALTH PLAN CHECK REVISIONS	06-18-2021				PN	PN	JR	PN
		3	ADDENDUM #2	12-03-2021				PN	PN	JR	PN
		4	ADDENDUM #3	02-18-2022				PN	PN	JR	PN

REGISTERED PROFESSIONAL ENGINEER PAGE E. NOCK No. 78,395 CIVIL STATE OF CALIFORNIA
12/3/2021
Date Signed:

PLANS PREPARED BY:
Blair, Church & Flynn
CONSULTING ENGINEERS
4551 Glenn Avenue, Suite 200
Clovis, California 93612
Tel (559) 326-5400
Fax (559) 326-1900

LOCATION: BISHOP, CALIFORNIA

BISHOP SERVICE CENTER
SITE DEVELOPEMENT
DETAILS

VOLUME 1

SOUTHERN CALIFORNIA EDISON An EDISON INTERNATIONAL Company

SHEET NO.
C6.5a
SCALE: AS NOTED
37 OF 66 SHTS.

100% CONSTRUCTION DOCUMENTS (12-03-2021)

Drawing: P:\219-0301\Site\productionDrawings\01 - Site\Details.dwg, C6.5a Details - BCF.ctb
Plot by: jrosales Feb 24, 2022 - 7:30am

SOUTHERN CALIFORNIA EDISON
2012 - 5 SIZE

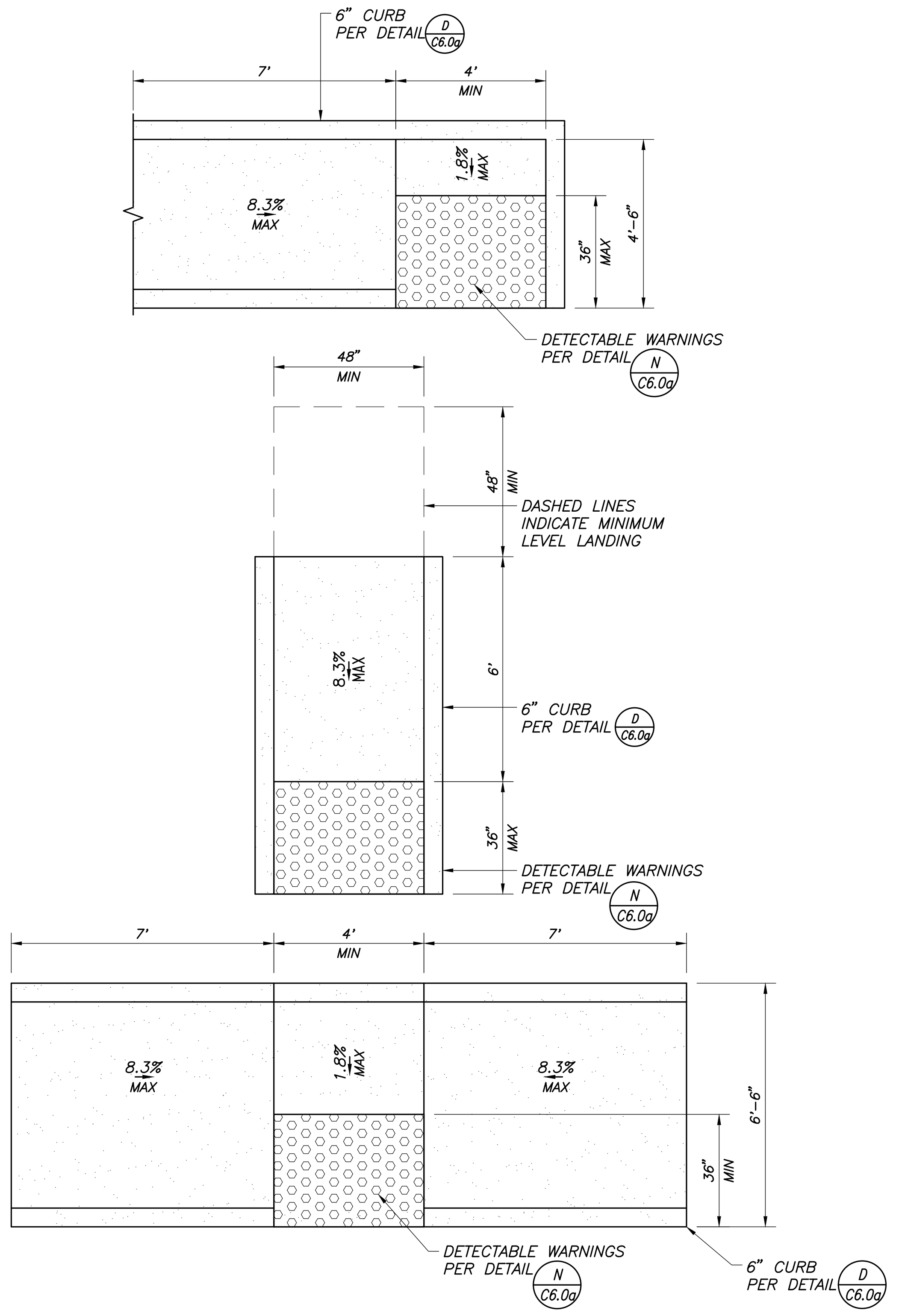

A CONCRETE CURB RAMP (C6.6a)
NOT TO SCALE

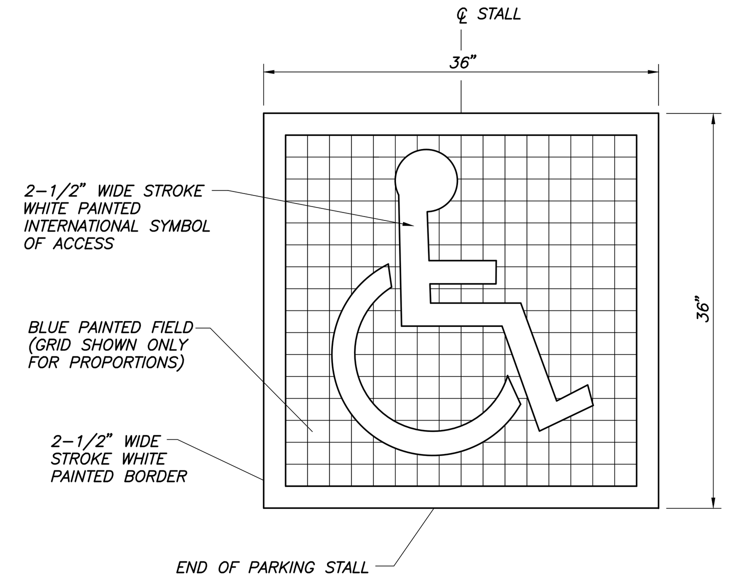

B ACCESSIBLE SYMBOL (C6.6a)
NOT TO SCALE

NOTES:
1. INSTALL WEAKENED PLANE JOINTS EVERY 15' AND EXPANSION JOINTS EVERY 45' PER DETAIL A/C6.0a
2. FILL JOINT AT EXPANSION WITH MOLDED JOINT FILLER CONFORMING TO ASTM D1751.

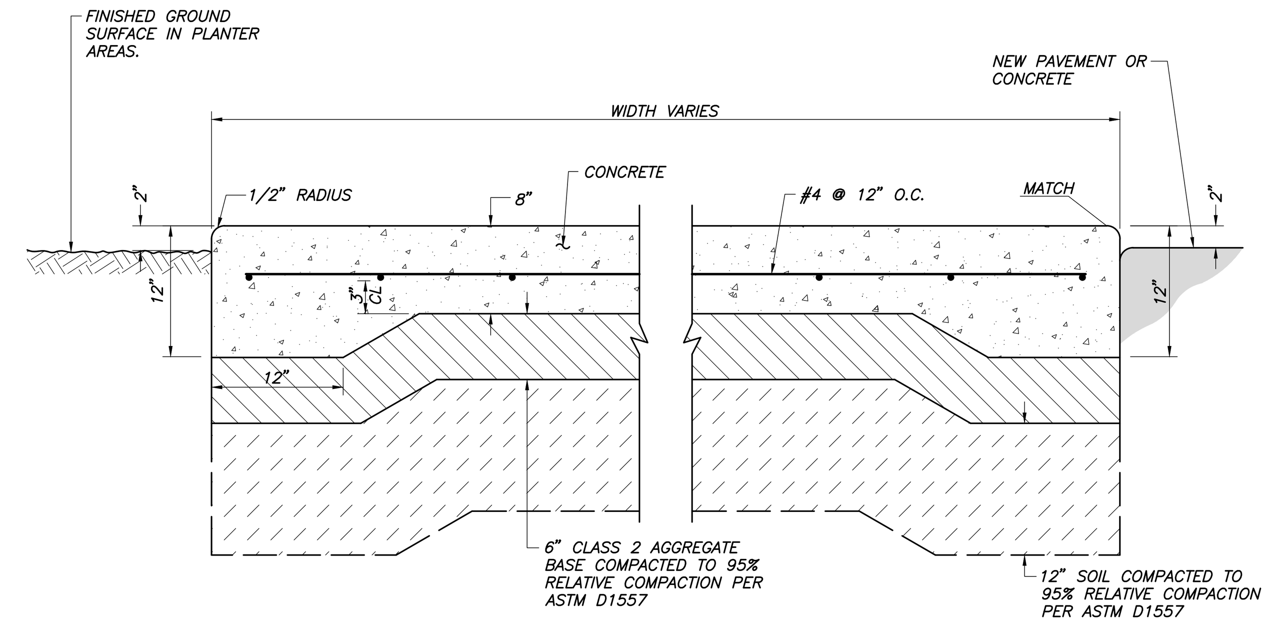

D EQUIPMENT PAD (C6.6a)
NOT TO SCALE

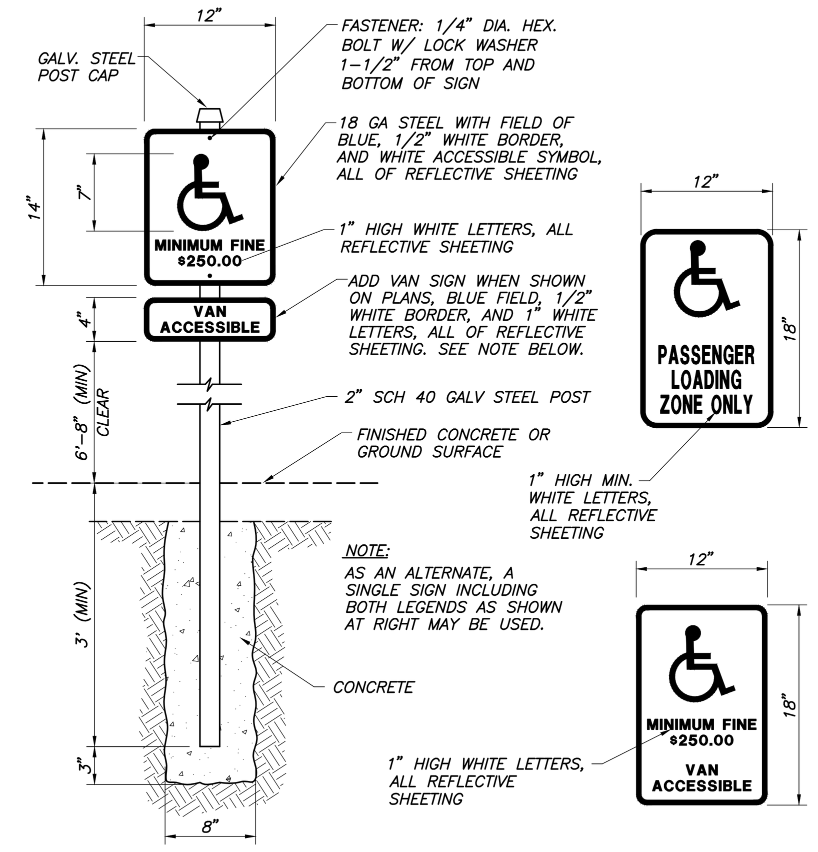

F ACCESSIBLE PARKING SIGN (C6.6a)
NOT TO SCALE

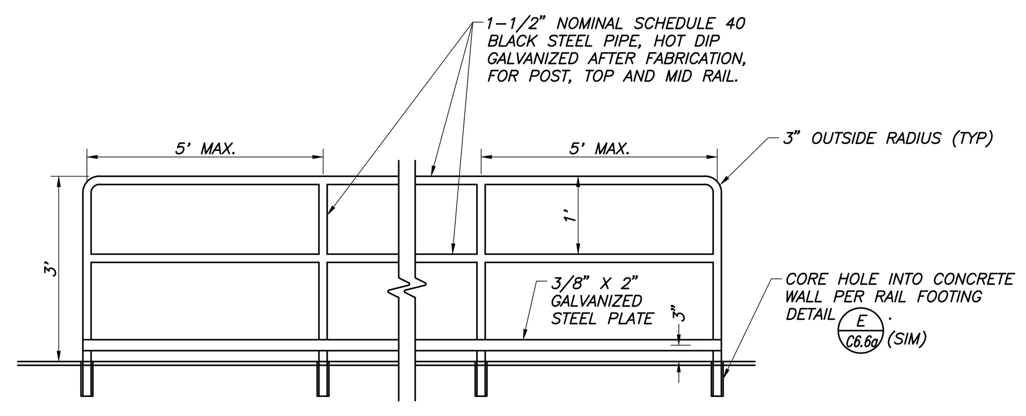

NOTES:
1. ALL WELDS TO BE GROUND SMOOTH.
2. CONTRACTOR MAY SURFACE MOUNT GUARD RAIL TO CONCRETE WALL. CONTRACTOR MUST SUBMIT SHOP DRAWING FOR APPROVAL.

C GUARDRAIL (C6.6a)
NOT TO SCALE

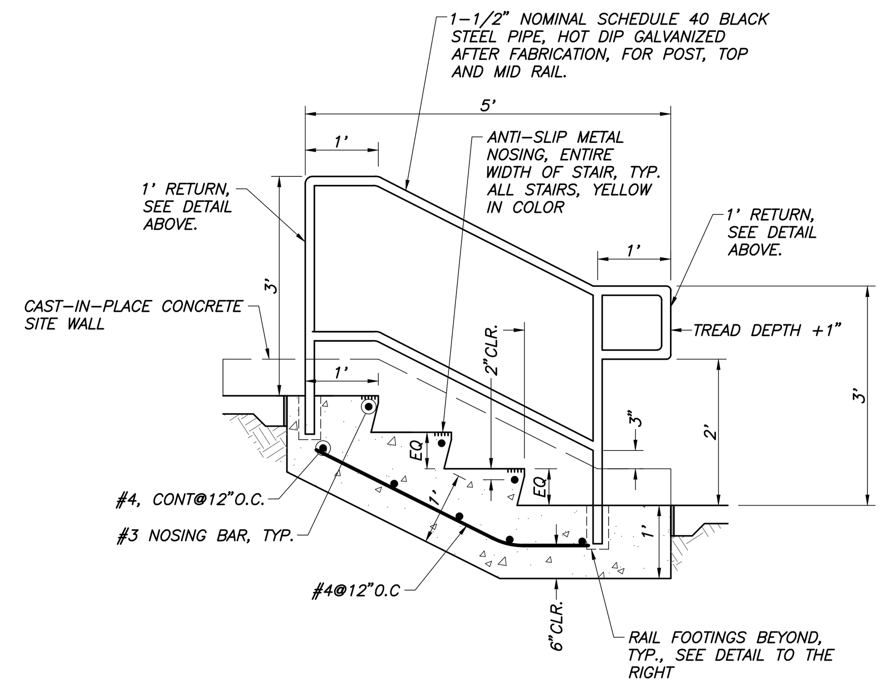

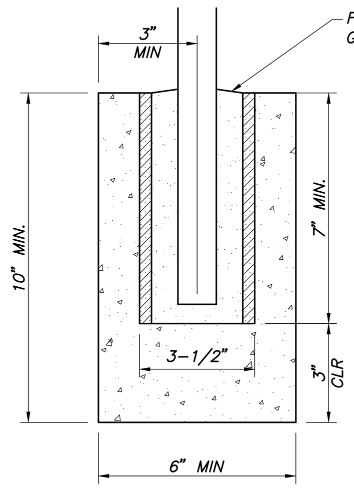

RAIL FOOTING DETAIL
NOT TO SCALE

NOTES:
1. ALL WELDS TO BE GROUND SMOOTH
2. SEE PLANS AND ELEVATIONS FOR RAIL AND POST SPACING

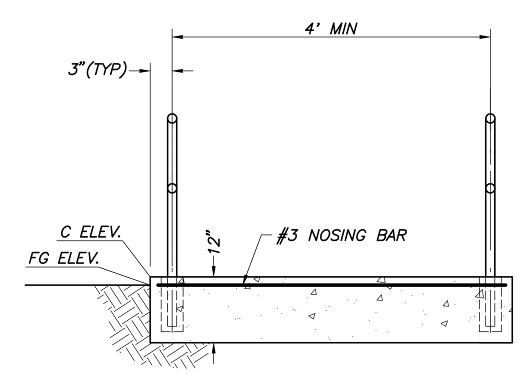

E STAIRS AND RAIL (C6.6a)
NOT TO SCALE

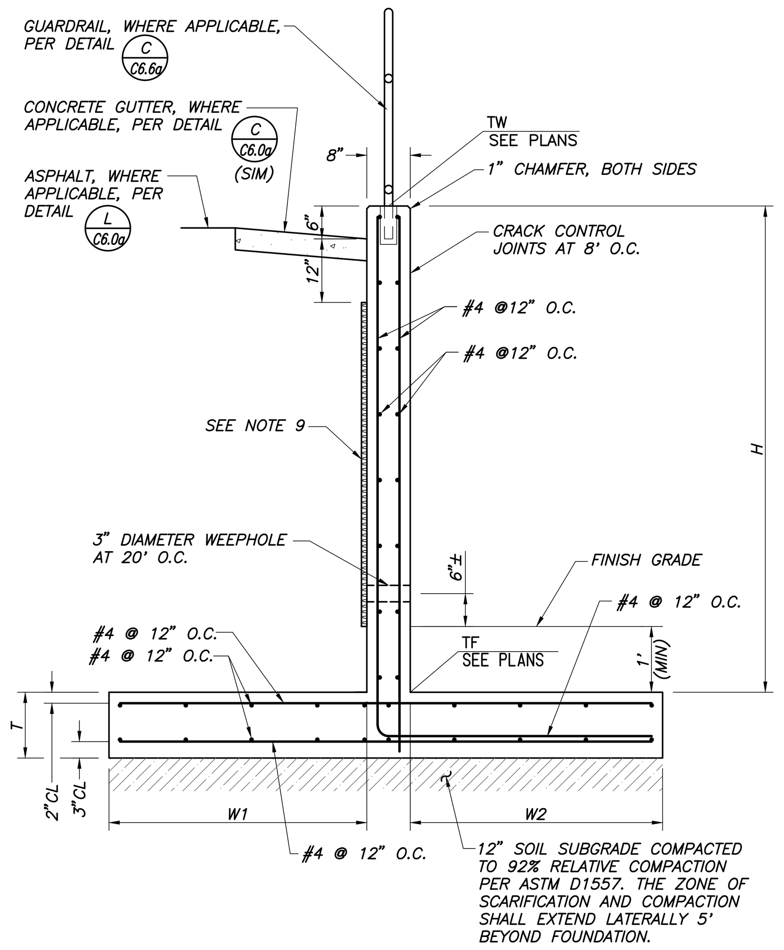

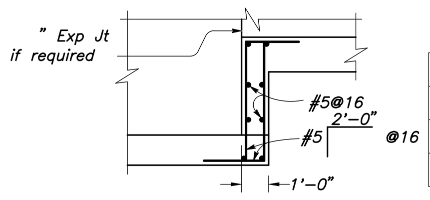

FOOTING STEP DETAIL

H	T	K	W1	W2
< 3'-0"	12"	12"	6"	6"
3'-0" - 5'-0"	12"	12"	12"	12"
5'-0" - 7'-0"	12"	12"	20"	20"

STRUCTURAL NOTES
1. CAST-IN-PLACE CONCRETE SHALL HAVE A MINIMUM 28-DAY COMPRESSIVE STRENGTH OF 4,000 psi.
2. REINFORCING STEEL SHALL HAVE A TENSILE STRENGTH OF 60 ksi.
3. ALL EXPOSED CONCRETE EDGES SHALL HAVE 1" CHAMFER.
4. BACKFILL SHALL NOT BE PERFORMED FOR 7 DAYS FOLLOWING POUR, OR UNTIL CONCRETE HAS MET A MINIMUM COMPRESSIVE STRENGTH OF 3,000 psi. STRUCTURAL BACKFILL SHALL BE PERFORMED USING THE REQUIRED TYPE OF BACKFILL MATERIAL, MOISTURE CONDITIONED, PLACED IN 8" UNCOMPACTED LIFTS AND COMPACTED TO 92% RELATIVE COMPACTION.
5. SUBGRADE MATERIAL SHALL BE PREPARED AS INDICATED IN THESE PLANS.
6. ALL EXPOSED SURFACES INCLUDING VERTICAL WALL FACES SHALL RECEIVE A CLASS 1 CALTRANS SURFACE FINISH.
7. ALL REINFORCING STEEL SHALL HAVE A MINIMUM LAP SPLICE LENGTH OF 40 BAR DIAMETERS AND AN EDGE CLEAR DISTANCE OF 2 INCHES UNLESS OTHERWISE NOTED.
8. DEVELOPMENT LENGTH FOR HOOKED BARS SHALL BE A MINIMUM OF 12 BAR DIAMETERS.
9. MIRADRAIN SYSTEM, OR APPROVED EQUAL, SHALL BE APPLIED TO THE BACK OF WALL PER MANUFACTURERS RECOMMENDATIONS. SHEET DRAIN SHALL BE WRAPPED WITH FILTER FABRIC. BACK OF SHEET DRAIN PLASTIC TO BE CUT TO MATCH SIZE OF WEEPHOLE (DO NOT CUT FILTER FABRIC).

G CONCRETE RETAINING WALL (C6.6a)
NOT TO SCALE

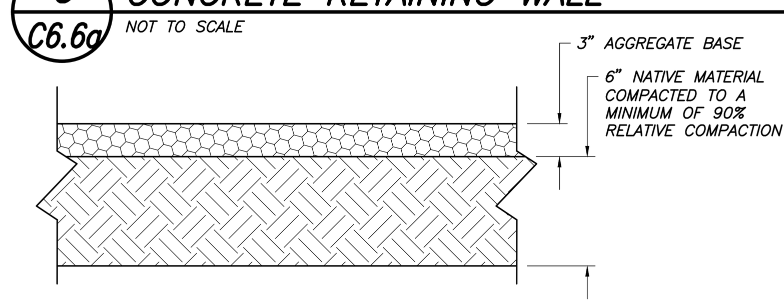

H AGGREGATE BASE (C6.6a)
NOT TO SCALE

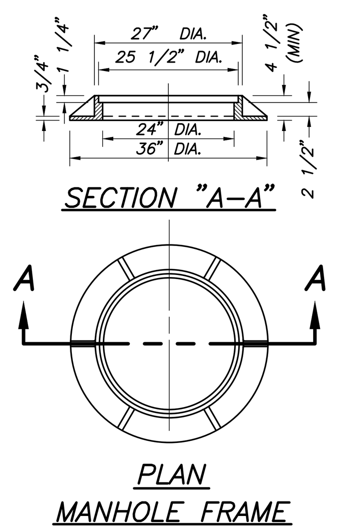

PLAN
MANHOLE FRAME

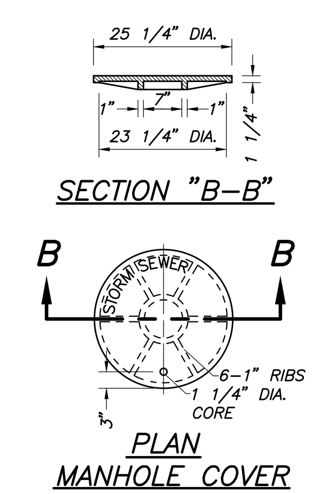

PLAN
MANHOLE COVER

NOTES:
1. ALL DIMENSIONS ARE FINISHED DIMENSIONS.
2. MATERIAL SHALL BE CAST IRON.
3. FRAME AND COVER TO BE CONSTRUCTED IN ACCORDANCE WITH A.S.T.M. DESIGNATION A48, CLASS 25.
4. MANHOLE COVER DESIGN, AS A MINIMUM, IS TO HAVE THE WORDS "STORM SEWER" OR "STORM DRAIN" MOLDED INTO THE COVER.
5. PRECAST PIPE, ADJUSTING RINGS AND TAPERED SECTIONS SHALL BE CONSTRUCTED IN ACCORDANCE WITH A.S.T.M. C-478, USING TYPE II CEMENT.
6. ALL JOINTS BETWEEN PRECAST SECTIONS SHALL BE MORTARED.
7. INTERIOR OF THE MANHOLE SHALL HAVE A SMOOTH TROWELED SURFACE, (WOOD TROWEL).
8. IF THE DISTANCE BETWEEN THE FLOW LINE OF THE MANHOLE AND THE FINISH GRADE OF THE LID IS GREATER THAN OR EQUAL TO 12 FEET, THE MANHOLE IS TO BE CONSTRUCTED WITH STEPS.

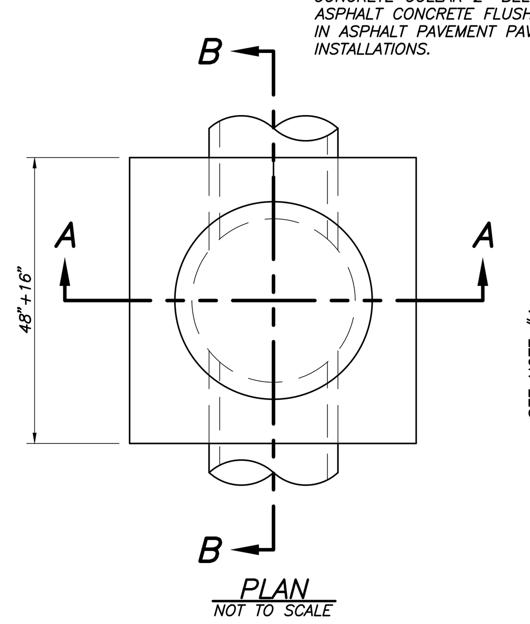

PLAN
NOT TO SCALE

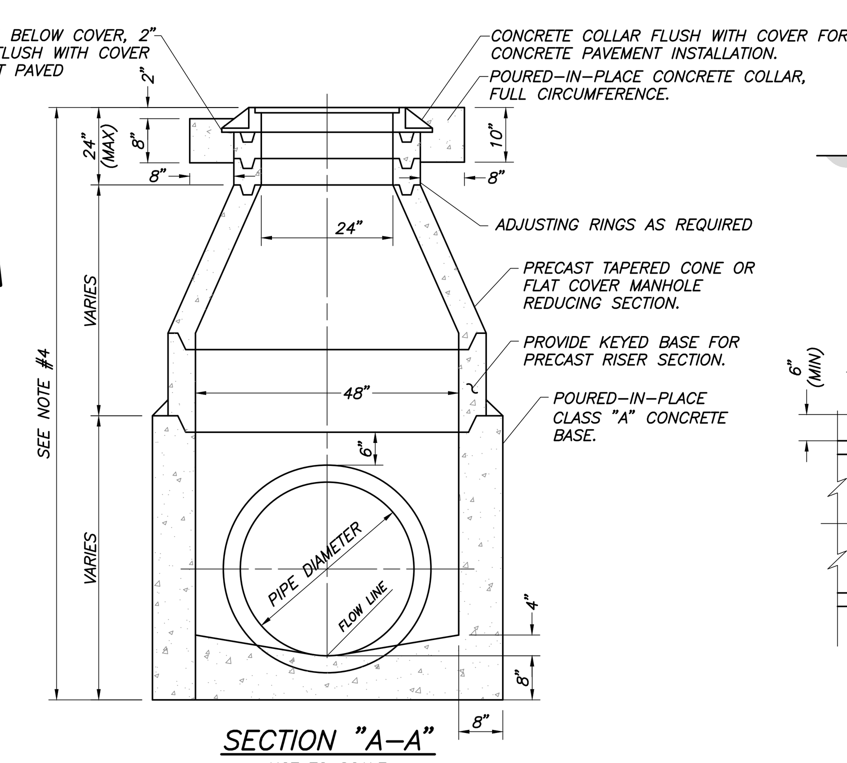

SECTION "A-A"
NOT TO SCALE

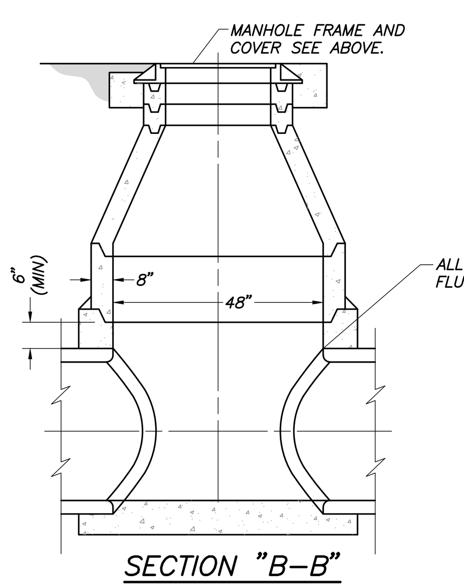

SECTION "B-B"
NOT TO SCALE

I STORM DRAIN MANHOLE STRUCTURE DETAIL (C6.6a)
NOT TO SCALE

2

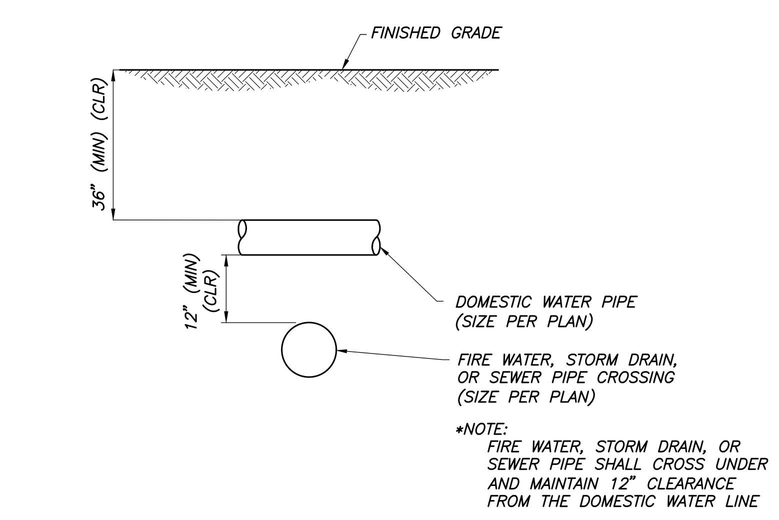

J UTILITY CROSSING TRENCH DETAIL (C6.6a)
NOT TO SCALE

REGISTERED PROFESSIONAL ENGINEER PAIGE E. NOGA No. 78,395 CIVIL STATE OF CALIFORNIA
12/3/2021
Date Signed:

PLANS PREPARED BY:
Blair, Church & Flynn
CONSULTING ENGINEERS
451 Clovis Avenue, Suite 200
Clovis, California 93612
Tel (559) 326-1400
Fax (559) 326-1500

NO.	REVISIONS	DATE	SAP WO	SUPV	APPROVED	ENGR	CK'D	MADE	P.E.
1	ADDENDUM #1	03-19-2021				PN	PN	JR	PN
2	ENVIRONMENTAL HEALTH PLAN CHECK REVISIONS	06-18-2021				PN	PN	JR	PN
3	ADDENDUM #2	12-03-2021				PN	PN	JR	PN
4	ADDENDUM #3	02-18-2022				PN	PN	JR	PN

REFERENCE DRAWINGS | REFERENCE DRAWINGS

LOCATION: BISHOP, CALIFORNIA
BISHOP SERVICE CENTER
SITE DEVELOPEMENT
DETAILS
VOLUME 1
SOUTHERN CALIFORNIA EDISON An EDISON INTERNATIONAL Company
SHEET NO. C6.6a
SCALE: AS NOTED
38 OF 66 SHTS.

100% CONSTRUCTION DOCUMENTS (12-03-2021)

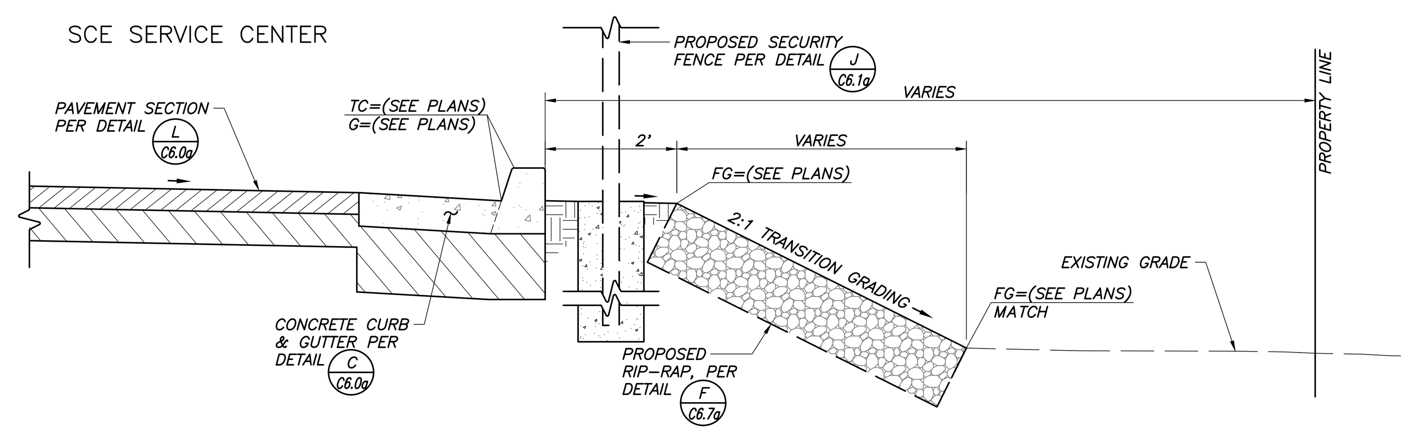

A SECTION
C6.7a
NOT TO SCALE

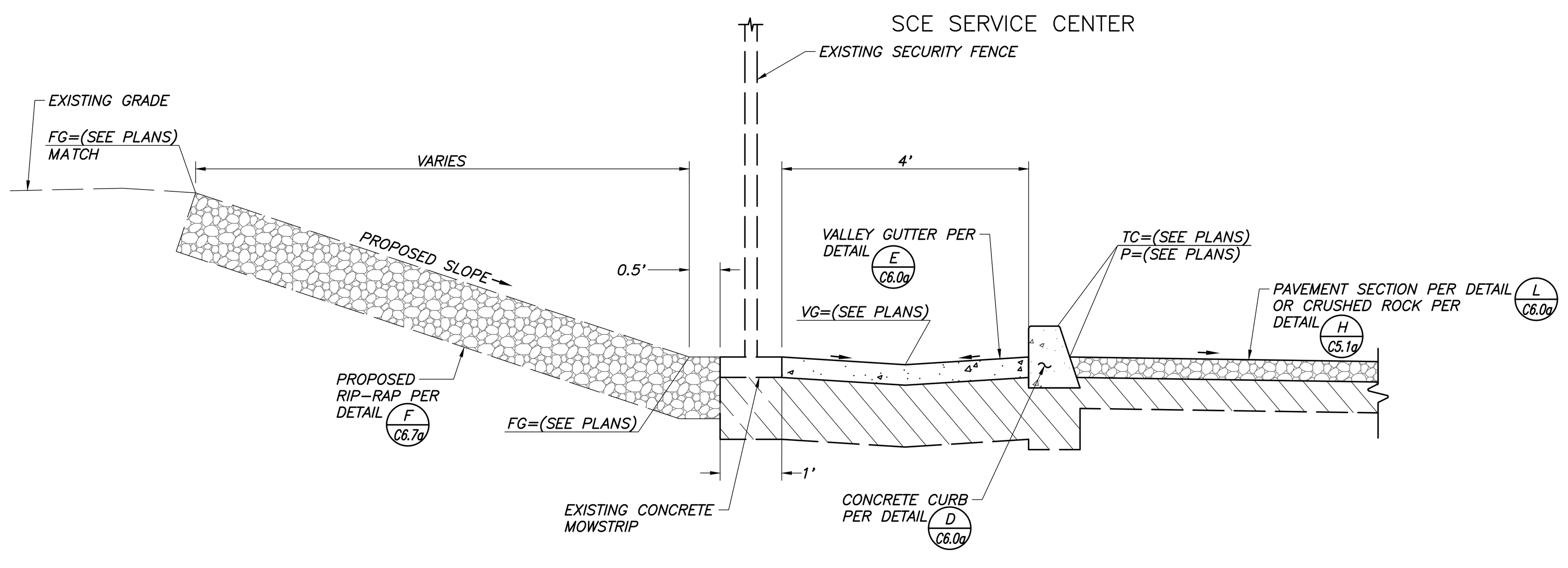

B SECTION
C6.7a
NOT TO SCALE

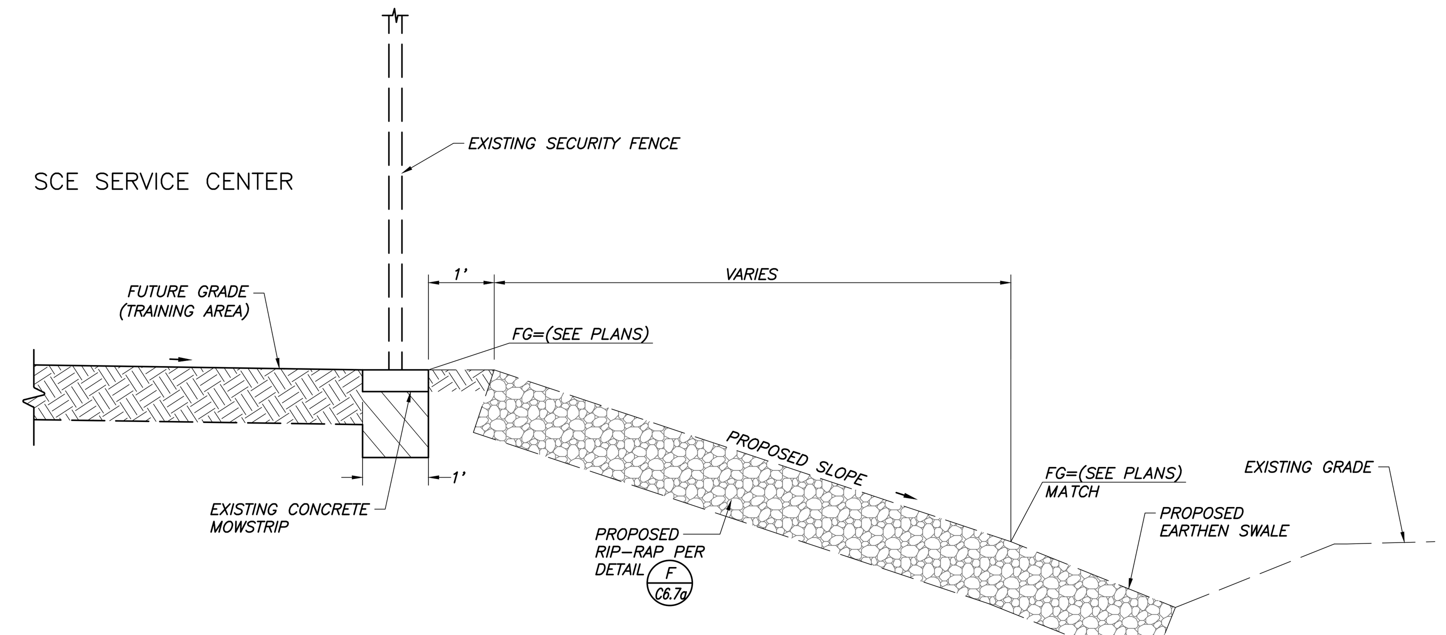

C SECTION
C6.7a
NOT TO SCALE

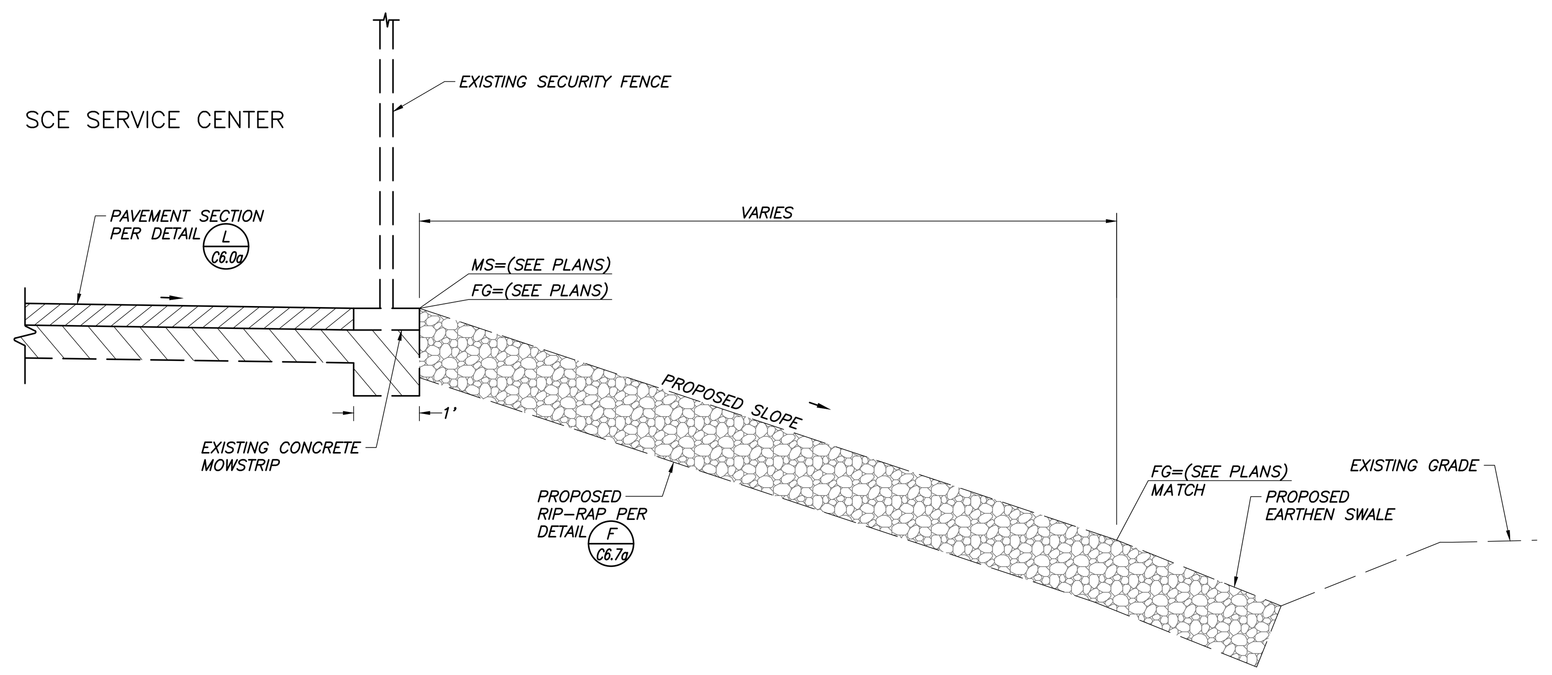

D SECTION
C6.7a
NOT TO SCALE

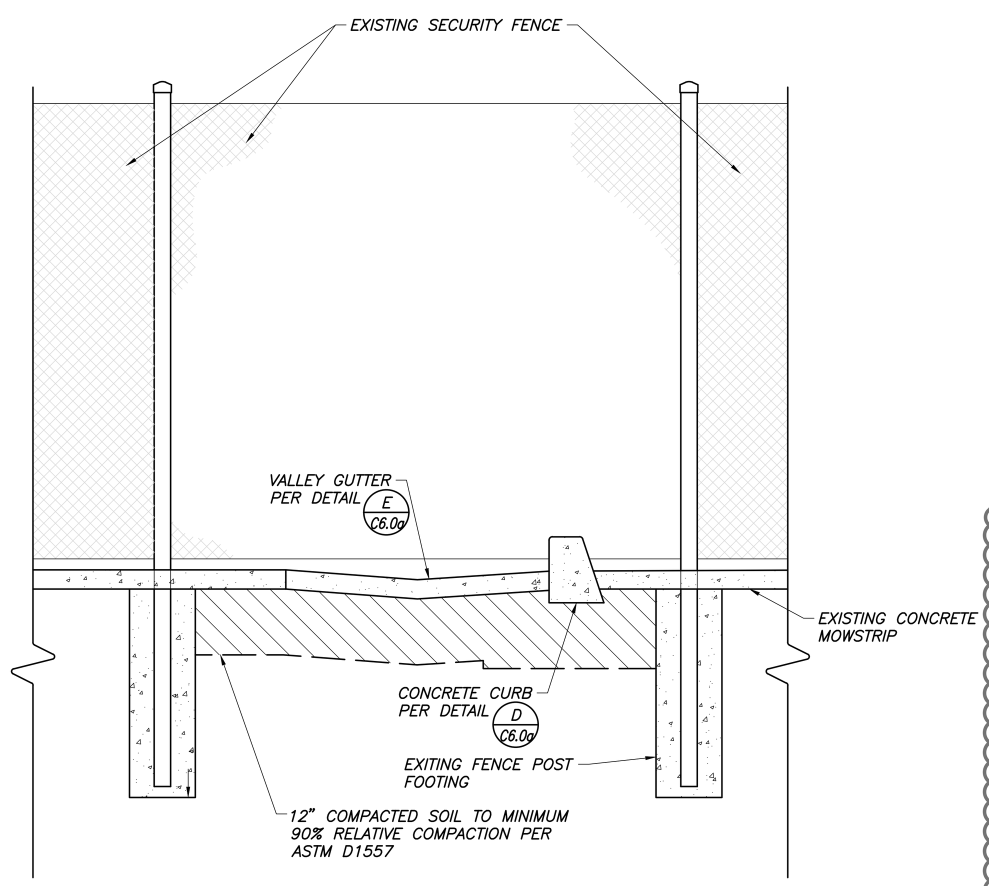

E SECTION
C6.7a
NOT TO SCALE

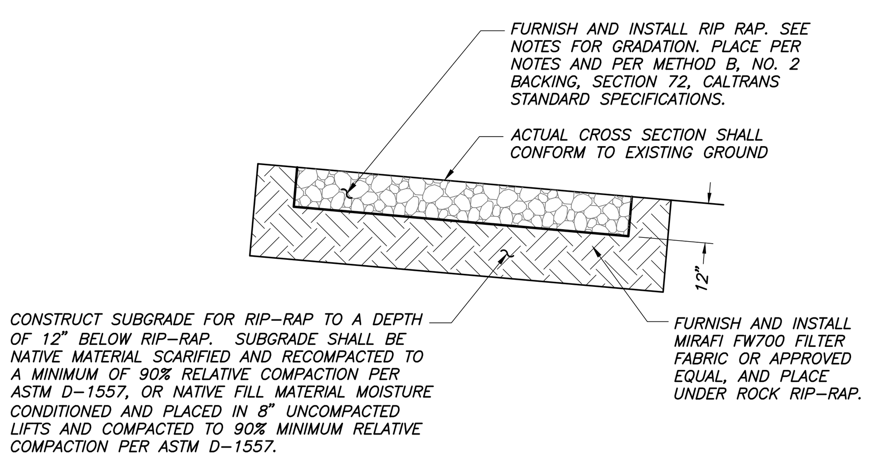

NOTES:

GEOTEXTILE MATERIAL AND INSTALLATION

1. THE GEOTEXTILE SHALL BE MIRAFI FW700 OR APPROVED EQUAL.
2. GRADE AND MAINTAIN SOIL SURFACES IN A SMOOTH, UNIFORM CONDITION DURING INSTALLATION OF THE GEOTEXTILE. ALL ROCKS GREATER THAN 4 INCHES SHALL BE REMOVED FROM THE GRADED SIDE SLOPE OR SECURELY WORKED INTO THE GRADED SURFACE AND FILLED WITH FINES TO CREATE A SMOOTH SURFACE OVER AND AROUND THE ROCK.
3. RUN GEOTEXTILE LENGTHWISE DOWN SLOPE IN CONTINUOUS RUNS FROM TOP ANCHOR TO BOTTOM ANCHOR. AVOID HORIZONTAL SEAMS IF POSSIBLE.
4. MANEUVER SHEETS OF THE GEOTEXTILE INTO PLACE IN A MANNER WHICH MINIMIZES WRINKLES, FOLDS, OR SIMILAR DISTRESS WHICH CAN DAMAGE THE FABRIC.
5. USE SANDBAGS AS NECESSARY TO TEMPORARILY ANCHOR OR HOLD THE GEOTEXTILE MATERIAL IN POSITION DURING INSTALLATION.
6. WHERE NECESSARY, CUT THE GEOTEXTILE TO FIT AROUND LARGE ROCK OUTCROPPINGS THAT CANNOT BE MOVED.
7. TAKE CARE DURING INSTALLATION OF THE GEOTEXTILE TO REDUCE INCIDENCES OF DAMAGE TO THE MATERIAL.
8. USE 18-INCH OVERLAP JOINTS TO JOIN PARALLEL SHEETS TOGETHER IN THE FIELD. THE SEAMS SHALL BE EXTENDED TO THE ENDS OF THE SHEETS THROUGH THE ANCHOR TRENCHES.

RIP RAP SLOPE PROTECTION MATERIAL ON GEOTEXTILE

1. RIP RAP GRADATION IS AS FOLLOWS:

ROCK SIZE	(NO. 2) % LARGER THAN
200 LB	0-5
25 LB	25-75
5 LB	90-100

2. ROCK SLOPE PROTECTION SHALL BE PLACED AS TO PROVIDE A MINIMUM OF VOIDS AND THE LARGER ROCKS SHALL BE PLACED IN THE TOE COURSE AND ON THE OUTSIDE SURFACE OF THE SLOPE PROTECTION.
3. THE THICKNESS OF THE ROCK SLOPE PROTECTION SHOULD NOT VARY FROM THE PLANNED THICKNESS BY MORE THAN 4 INCHES WHEN MEASURED AT RIGHT ANGLES TO THE SLOPE.

F RIP-RAP
C6.7a
NOT TO SCALE

NOTES:
1. MAXIMUM POLE HEIGHT = 40'-0"
2. MAXIMUM FLAG SIZE = TOP FLAG: 96" X 144"
   BOTTOM FLAG 72" X 120"
3. MAXIMUM WIND SPEED = 120 MPH
4. MAXIMUM SOIL LATERAL BEARING PRESSURE = 200 PSF/FT
5. CONTRACTOR TO COORDINATE LIGHTING SPIKE WITH MANUFACTURER.
6. FLAG PROVIDED BY GC.

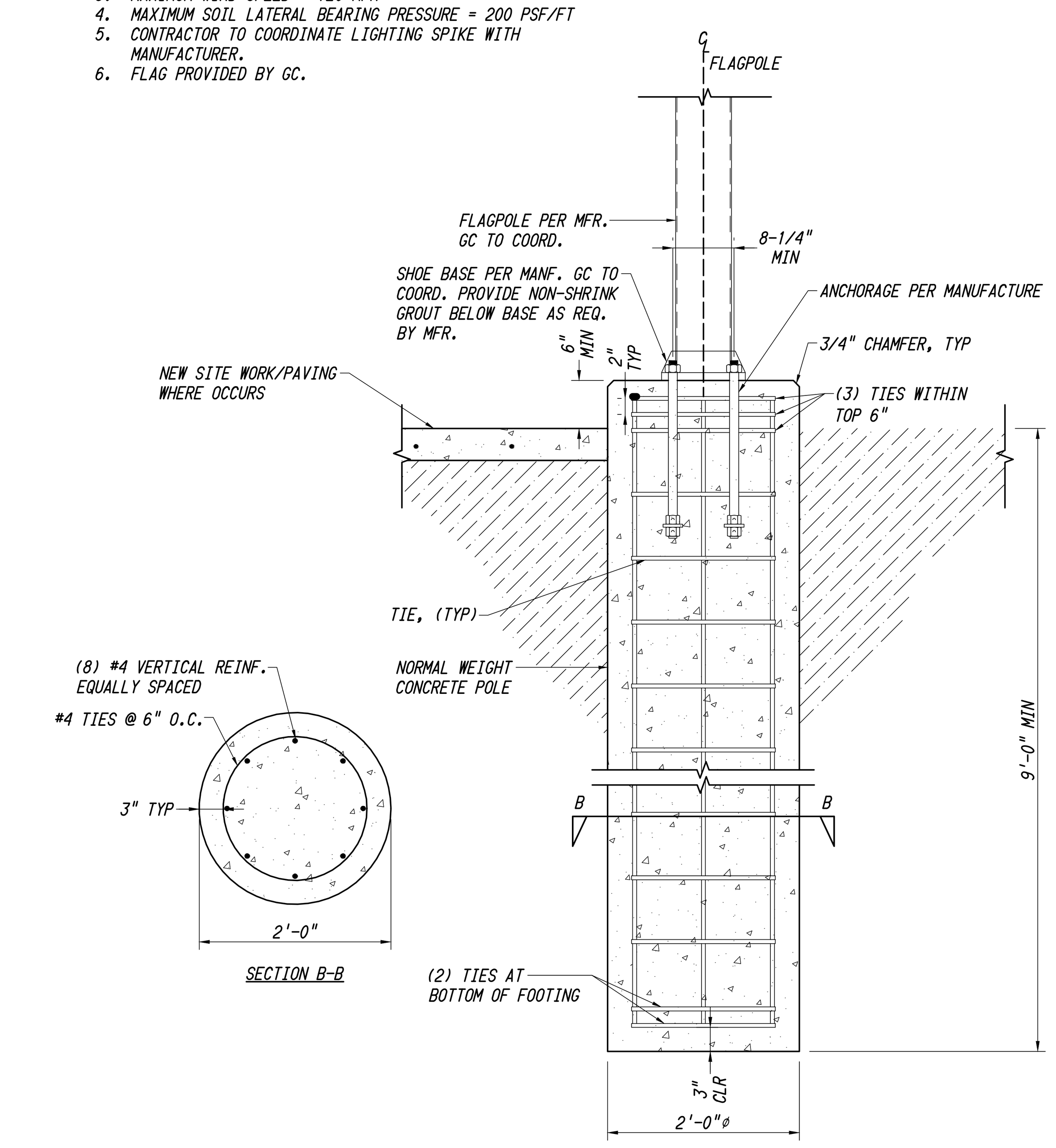

G FLAG POLE
C6.7a
NOT TO SCALE

PLANS PREPARED BY:
Blair, Church & Flynn
CONSULTING ENGINEERS
451 Clovis Avenue, Suite 200
Clovis, California 93612
Tel (559) 326-1400
Fax (559) 326-1500

REGISTERED PROFESSIONAL ENGINEER PAIGE E. NEGA No. 78,395 CIVIL STATE OF CALIFORNIA
12/3/2021 Date Signed:

NO.	REVISIONS	DATE	SAP WO	SUPV	APPROVED	ENGR	CK'D	MADE	P.E.
1	ADDENDUM #1	03-19-2021				PN	PN	JR	PN
2	ENVIRONMENTAL HEALTH PLAN CHECK REVISIONS	06-18-2021				PN	PN	JR	PN
3	ADDENDUM #2	12-03-2021				PN	PN	JR	PN
4	ADDENDUM #3	02-18-2022				PN	PN	JR	PN

REFERENCE DRAWINGS | REFERENCE DRAWINGS

LOCATION: BISHOP, CALIFORNIA
BISHOP SERVICE CENTER
SITE DEVELOPEMENT
DETAILS
VOLUME 1
SOUTHERN CALIFORNIA EDISON An EDISON INTERNATIONAL Company
SHEET NO. C6.7a
SCALE: AS NOTED
39 OF 66 SHTS.

100% CONSTRUCTION DOCUMENTS (12-03-2021)

SOUTHERN CALIFORNIA EDISON
2012 - 5 SIZE

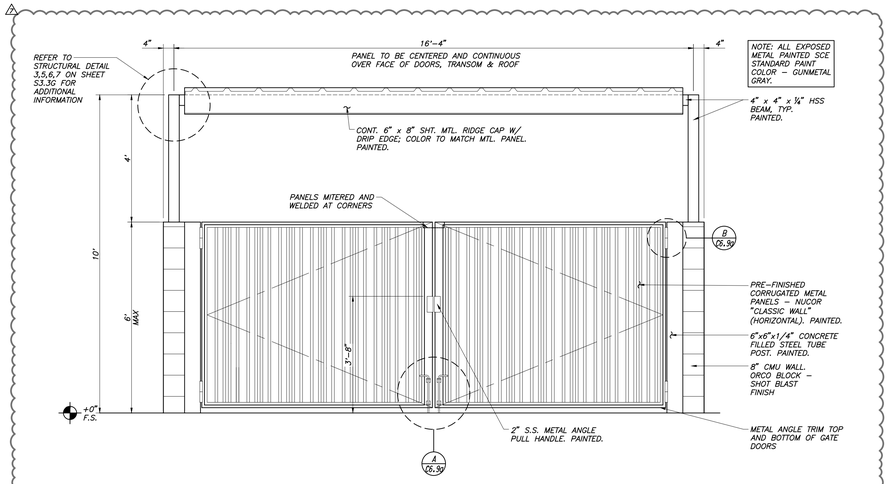

A C6.8a TRASH ENCLOSURE – FRONT ELEVATION
NOT TO SCALE

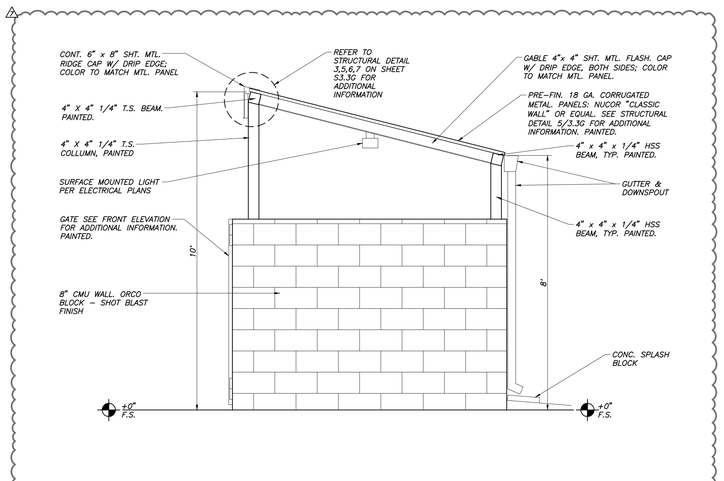

B C6.8a TRASH ENCLOSURE – RIGHT ELEVATION
NOT TO SCALE

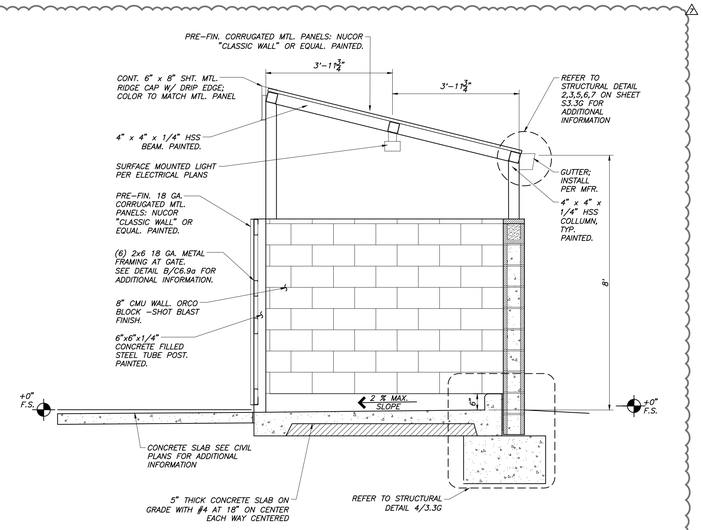

C C6.8a TRASH ENCLOSURE – SECTION
NOT TO SCALE

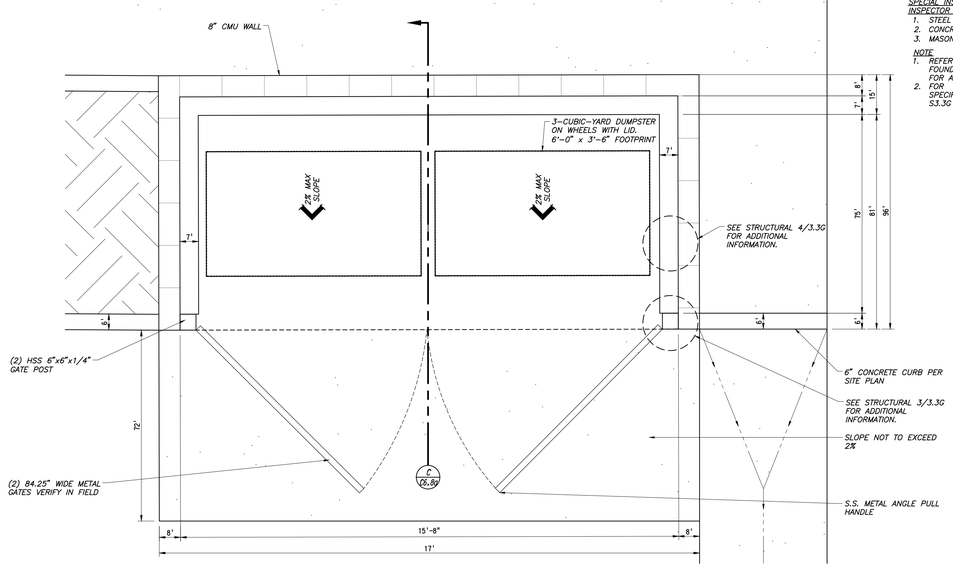

SPECIAL INSPECTION BY CERTIFIED INSPECTOR IS REQUIRED FOR:
1. STEEL (CBC 1704.3)
2. CONCRETE (CBCB 1704.4)
3. MASONRY (CBCB 1704.5.1 & 1704.5.3)

NOTE:
1. REFER TO TRASH ENCLOSURE FOUNDATION PLAN ON SHEET S3.3G FOR ADDITIONAL INFORMATION.
2. FOR TRASH ENCLOSURE DESIGN SPECIFICATIONS REFER TO SHEET S3.3G FOR DETAILS.

D C6.8a TRASH ENCLOSURE – PLAN
NOT TO SCALE

PLANS PREPARED BY:
Blair, Church & Flynn
CONSULTING ENGINEERS
4821 Clovis Avenue, Suite 200
Clovis, California 93612
Tel (559) 326-1400
Fax (559) 326-1500

REGISTERED PROFESSIONAL ENGINEER
PATRICK E. NOGUES
No. 78,395
CIVIL
STATE OF CALIFORNIA
6/2/2022
Date Signed

NO.	REVISIONS	DATE	SAP WO	SUPV	APPROVED	ENGR	CK'D	MADE	P.E.
7	TRASH ENCLOSURE REVISIONS	07-20-2022				PN	PN	JR	PN
1	ADDENDUM #1	03-19-2021				PN	PN	JR	PN
2	ENVIRONMENTAL HEALTH PLAN CHECK REVISIONS	06-18-2021				PN	PN	JR	PN
3	ADDENDUM #2	12-03-2021				PN	PN	JR	PN
4	ADDENDUM #3	02-18-2022				PN	PN	JR	PN
5	FIRE DEPARTMENT INSPECTION REVISIONS	05-02-2022				PN	PN	JR	PN
6	STATE WATER BOARD REVISIONS	06-17-2022				PN	PN	JR	PN

REFERENCE DRAWINGS | REFERENCE DRAWINGS

LOCATION: BISHOP, CALIFORNIA

BISHOP SERVICE CENTER
SITE DEVELOPEMENT
TRASH ENCLOSURE DETAILS

VOLUME 1

SOUTHERN CALIFORNIA EDISON An EDISON INTERNATIONAL Company

SHEET NO. C6.8a

SCALE: AS NOTED

40 OF 66 SHTS.

100% CONSTRUCTION DOCUMENTS (06-17-2022)

Drawing: P:\219430\Site\Production\Drawings\01 - Site\219301a104.dwg; C6.8a Trash Enclosure Details - BCF.ctb
Plot By: jfowler Jul 06, 2022 - 2:23pm

SOUTHERN CALIFORNIA EDISON
2012 - 5 SIZE

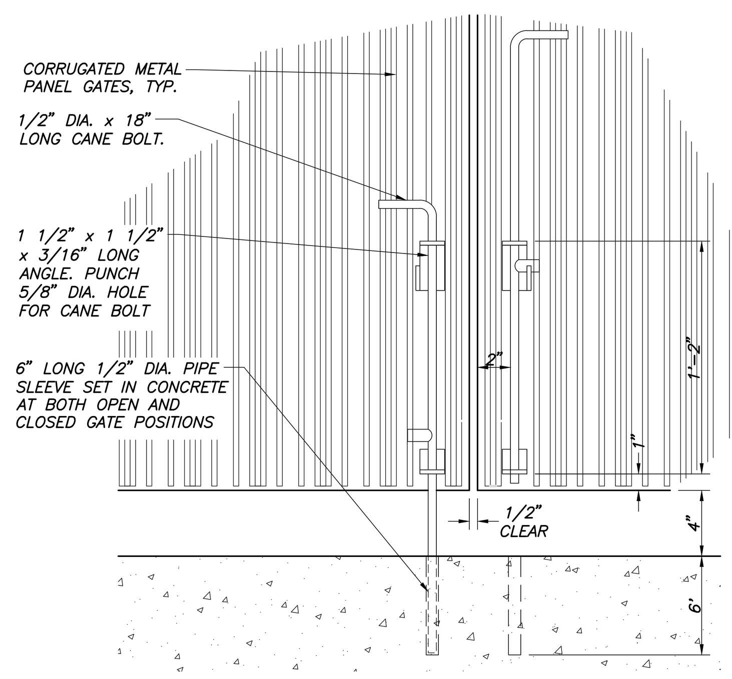

A / C6.9a — TRASH ENCLOSURE CANE BOLT

NOT TO SCALE

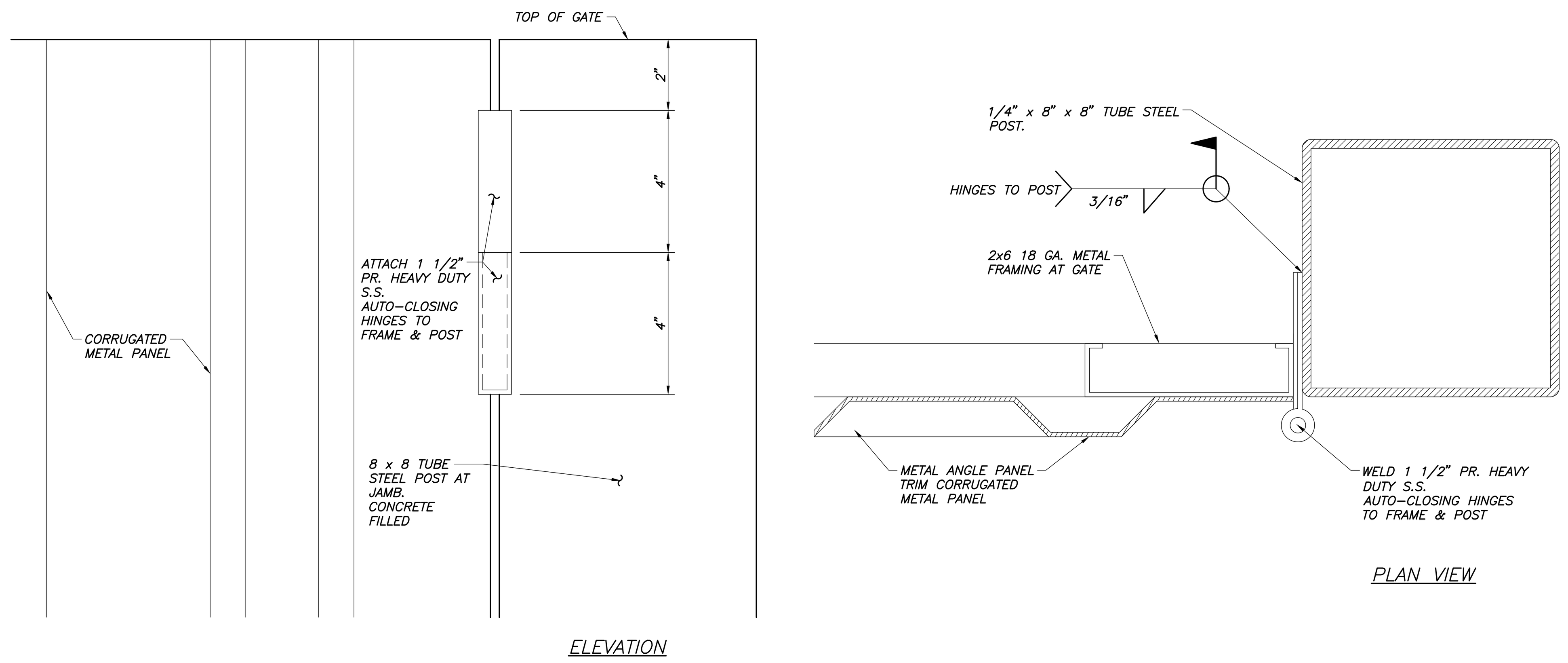

B / C6.9a — TRASH ENCLOSURE HINGE

NOT TO SCALE

NO.	REVISIONS	DATE	SAP WO	SUPV	APPROVED	ENGR	CK'D	MADE	P.E.
7	TRASH ENCLOSURE REVISIONS	07-20-2022				PN	PN	JR	PN

NO.	REVISIONS	DATE	SAP WO	SUPV	APPROVED	ENGR	CK'D	MADE	P.E.
1	ADDENDUM #1	03-19-2021				PN	PN	JR	PN
2	ENVIRONMENTAL HEALTH PLAN CHECK REVISIONS	06-18-2021				PN	PN	JR	PN
3	ADDENDUM #2	12-03-2021				PN	PN	JR	PN
4	ADDENDUM #3	02-18-2022				PN	PN	JR	PN
5	FIRE DEPARTMENT INSPECTION REVISIONS	05-02-2022				PN	PN	JR	PN
6	STATE WATER BOARD REVISIONS	06-17-2022				PN	PN	JR	PN

REFERENCE DRAWINGS | REFERENCE DRAWINGS

REGISTERED PROFESSIONAL ENGINEER — PAIGE E. NOGA — No. 78,395 — CIVIL — STATE OF CALIFORNIA

5/2/2022
Date Signed:

PLANS PREPARED BY:
Blair, Church & Flynn
CONSULTING ENGINEERS
451 Clovis Avenue, Suite 200
Clovis, California 93612
Tel (559) 326-1400
Fax (559) 326-1500

LOCATION: BISHOP, CALIFORNIA

BISHOP SERVICE CENTER
SITE DEVELOPEMENT
TRASH ENCLOSURE DETAILS

VOLUME 1

SHEET NO. C6.9a

SCALE: AS NOTED

41 OF 66 SHTS.

SOUTHERN CALIFORNIA EDISON — An EDISON INTERNATIONAL Company

100% CONSTRUCTION DOCUMENTS (06-17-2022)

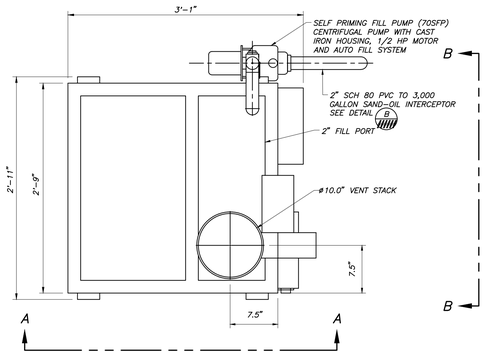

PLAN VIEW

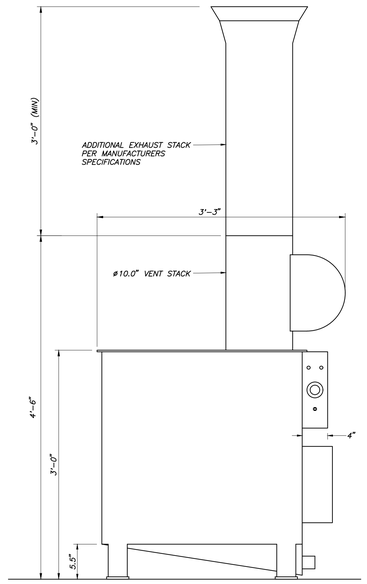

SECTION A–A

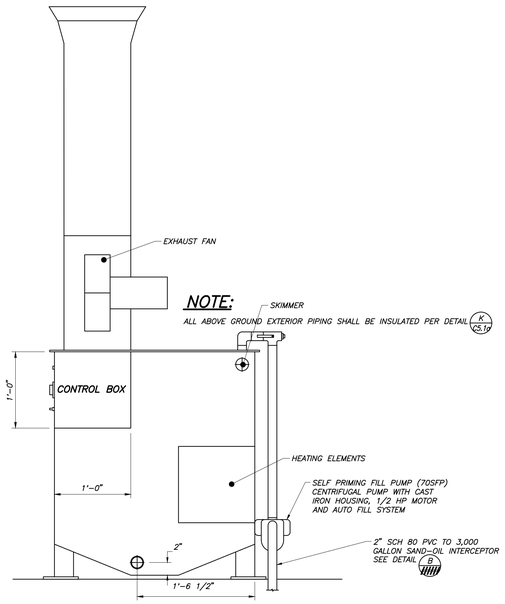

NOTE:
ALL ABOVE GROUND EXTERIOR PIPING SHALL BE INSULATED PER DETAIL K/C5.1d

SECTION B–B

A / C6.10d WASTE WATER EVAPORATOR (WATER EATER MODEL 125E)

NOT TO SCALE

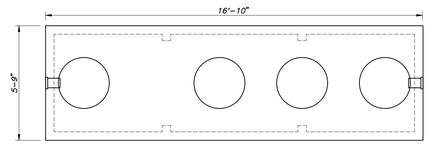

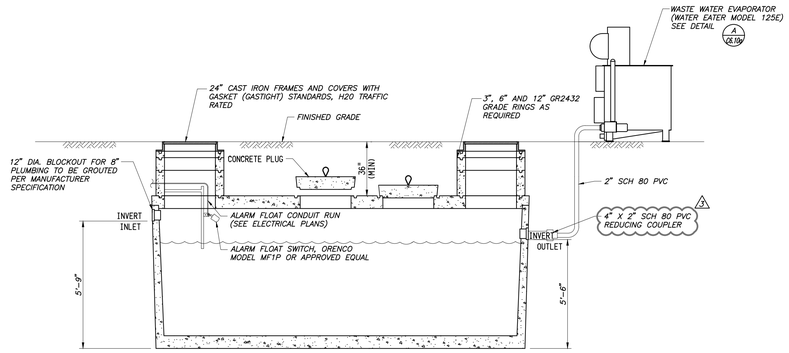

NOTE:
ALL ABOVE GROUND EXTERIOR PIPING SHALL BE INSULATED PER DETAIL K/C5.1d

B / C6.10d 3,000 GALLON HOLDING TANK

NOT TO SCALE

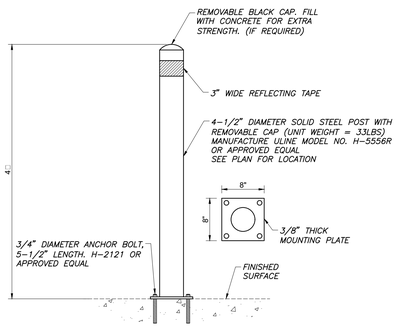

C / C6.10d BOLT DOWN BOLLARD

NOT TO SCALE

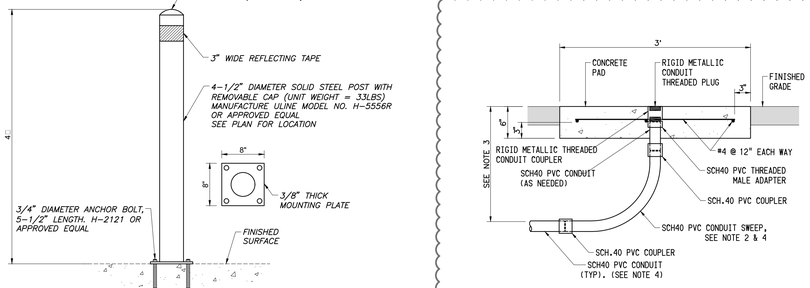

SECTION A–A

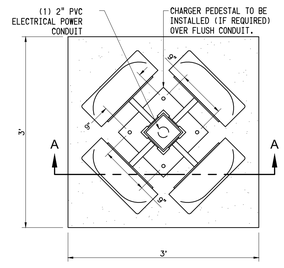

TYPICAL FLEET STUB AND CAP PLAN VIEW

NOTES:

1. MATERIAL FOR SERVICE CONDUIT SHALL BE LISTED AS ELECTRICAL CONDUIT. ACCEPTABLE MATERIAL SHALL BE PVC RIGID CONDUIT AND WHEN SPECIFIED, IMC OR RIGID METALLIC CONDUIT TAPED OR COATED FOR DIRECT BURIAL.
2. CONDUIT SWEEP SHALL BE PVC AND HAVE A RADIUS OF 24". RADIUS SHALL BE INCREASED WHERE REQUIRED PER NEC CHAPTER 9 .
3. MINIMUM CONDUIT COVER REQUIREMENTS SHALL FOLLOW NEC 300.5 UNLESS OTHERWISE SPECIFIED.
4. EXACT CONDUIT TYPE AND SIZE MAY VARY, REFER TO ELECTRICAL CONDUIT SCHEDULE AND PLAN.

D / C6.10d LEVEL 2 – CLIPPER CREEK CS40 (FLEET) CHARGER FOUNDATION

NOT TO SCALE

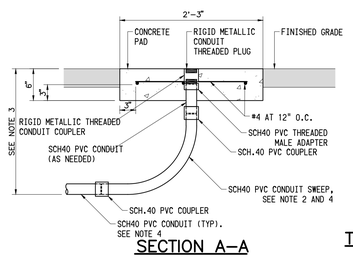

SECTION A–A

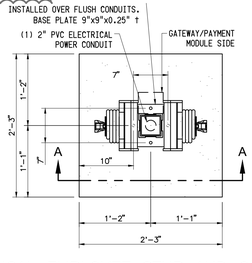

TYPICAL EMPLOYEE STUB AND CAP PLAN VIEW

NOTES:

1. MATERIAL FOR SERVICE CONDUIT SHALL BE LISTED AS ELECTRICAL CONDUIT. ACCEPTABLE MATERIAL SHALL BE PVC RIGID CONDUIT AND WHEN SPECIFIED, IMC OR RIGID METALLIC CONDUIT TAPED OR COATED FOR DIRECT BURIAL.
2. CONDUIT SWEEP SHALL BE PVC AND HAVE A RADIUS OF 24". RADIUS SHALL BE INCREASED WHERE REQUIRED PER NEC CHAPTER 9 .
3. MINIMUM CONDUIT COVER REQUIREMENTS SHALL FOLLOW NEC 300.5 UNLESS OTHERWISE SPECIFIED.
4. EXACT CONDUIT TYPE AND SIZE MAY VARY, REFER TO ELECTRICAL CONDUIT SCHEDULE AND PLAN

E / C6.10d LEVEL 2 – EVSE 3703 (EMPLOYEE) CHARGER FOUNDATION

NOT TO SCALE

REFERENCE DRAWINGS	REFERENCE DRAWINGS	NO.	REVISIONS	DATE	SAP WO	SUPV	APPROVED	ENGR	CK'D	MADE	P.E.
		1	ADDENDUM #1	03-19-2021				PN	PN	JR	PN
		2	ENVIRONMENTAL HEALTH PLAN CHECK REVISIONS	06-18-2021				PN	PN	JR	PN
		3	ADDENDUM #2	12-03-2021				PN	PN	JR	PN
		4	ADDENDUM #3	02-18-2022				PN	PN	JR	PN

REGISTERED PROFESSIONAL ENGINEER PAIGE E. NOLAN No. 78,395 CIVIL STATE OF CALIFORNIA
12/3/2021 Date Signed:

PLANS PREPARED BY:
Blair, Church & Flynn
CONSULTING ENGINEERS
4551 Clovis Avenue, Suite 200
Clovis, California 93612
Tel (559) 326-5400
Fax (559) 326-5500

LOCATION: BISHOP, CALIFORNIA

BISHOP SERVICE CENTER
SITE DEVELOPEMENT
DETAILS

VOLUME 1

SOUTHERN CALIFORNIA EDISON An EDISON INTERNATIONAL Company

SHEET NO. C6.10d

SCALE: AS NOTED

42 OF 66 SHTS.

100% CONSTRUCTION DOCUMENTS (12-03-2021)

Drawing: P:\Q19-0301\SI\Engproduction\Drawings\01 - Site\01930\d103.dwg; C6.10a Details - BCF.ctb
Plot by: jfreed15 Apr 24, 2022 - 7:04am
SOUTHERN CALIFORNIA EDISON
2012 - 5 SIZE

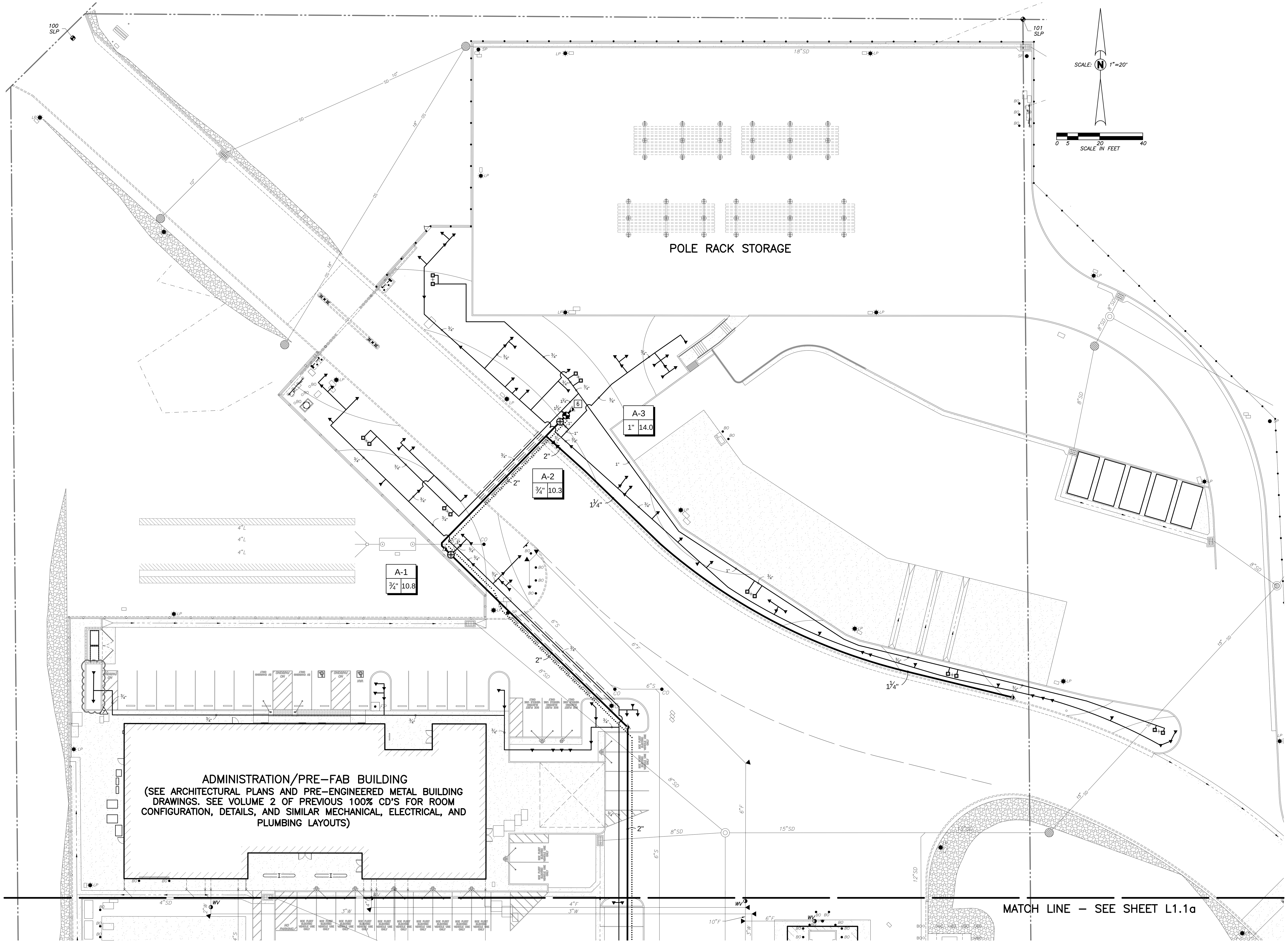

LEGEND:

SYMBOL	MANUFACTURER/MODEL/DESCRIPTION	ARC	PSI	GPM	RADIUS	DETAIL
▼	SHRUB BUBBLER TORO 570Z-6P-PRXCOM-10-SBH-PC3		30	0.22	4'	L/L1.2a
◘	TREE BUBBLER 1.0 TORO 570Z-4-COM-FB-100-PC	360	60	1	3'	K/L1.2a

SYMBOL	MANUFACTURER/MODEL/DESCRIPTION	DETAIL
	REMOTE CONTROL VALVE 1" TORO P220-26-0 GLOBE	H/L1.2a
	REMOTE CONTROL VALVE 3/4" TORO 264-06-03	H/L1.2a
	QUICK COUPLER VALVE TORO 100-2SLVC	I/L1.2a
	RESILENT WEDGE GATE VALVE	G/L1.2a
MV	MASTER VALVE 1" TORO P220S (SCRUBBER VALVE), INSTALL ABOVE GRADE	A/L1.3a
	REDUCED PRESSURE BACKFLOW ASSEMBLY WITH 40 MESH STRAINER. WILKINS 975XL-S	C/L1.3a
CA	IRRIGATION CONTROLLER HUNTER IC-0600-PL WALL-MOUNT	J/L1.2a
WS	WIRELESS WEATHER SENSOR HUNTER WSS-SEN, MOUNT ON LIGHT POLE AT +10 FEET ABOVE FINISH GRADE	
FS	FLOW SENSOR 1-1/2" HUNTER HFS WITH FCT-150 TEE FITTING (5-35 GPM), INSTALL ABOVE GRADE	B/L1.3a
PB	PULL BOX	D/L1.3a
	IRRIGATION LATERAL LINE: PVC SCHEDULE 40 SOLVENT WELD, SIZE AS NOTED	C/L1.2a
	IRRIGATION MAINLINE: PVC SCHEDULE 40 SOLVENT WELD, SIZE AS NOTED	A/L1.2a
	PIPE SLEEVE: PVC SCHEDULE 40 TWICE PIPE SIZE	D/L1.2a
	CONTROL WIRE SLEEVE	D/L1.2a
	CONTROL WIRE PLUS ONE (1) COMMON WIRE	E/L1.2a
—S—	SENSOR CABLE IN CONDUIT	E/L1.2a
#	VALVE NUMBER	
#" #	VALVE FLOW (GPM)	
	VALVE SIZE	
•UP/DN	DUCTILE IRON UP/DOWN PIPE RISER	
+	PROPOSED TREE, SEE PLANTING PLAN ON SHEET L201 FOR VARIETY AND SIZE	
(A)	POINT OF CONNECTION	
(B)	CONTROL WIRE IN CONDUIT TO PULLBOX	
(C)	PIPE BOTH ABOVE AND BELOW GRADE FROM THE POINT OF CONNECTION TO THE FIRST DOWNSTREAM GATE VALVE OUTSIDE THE PUMP HOUSE SHALL BE DUCTILE IRON WITH VICTAULIC GROOVED FITTINGS	

WATER CONSERVATION COMPLIANCE STATEMENT:

I HAVE COMPLIED WITH THE CRITERIA OF THE LANDSCAPE WATER CONSERVATION ORDINANCE AND GUIDELINES, AND HAVE APPLIED THEM FOR THE EFFICIENT USE OF WATER IN THE IRRIGATION DESIGN PLAN.

DAVID W. BRILEY, RLA 2787

SEE SHEET L1.2a FOR IRRIGATION NOTES

SEE SHEET L1.2a & L1.3a FOR IRRIGATION DETAILS

811
Know what's below. Call before you dig.

LICENSED LANDSCAPE ARCHITECT — DAVID W. BRILEY — Signature — 12/31/20 Renewal Date — 07/14/2020 Date — STATE OF CALIFORNIA

PLANS PREPARED BY:
Blair, Church & Flynn
CONSULTING ENGINEERS
451 Clovis Avenue, Suite 200
Clovis, California 93612
Tel (559) 326-1400
Fax (559) 326-1500

REFERENCE DRAWINGS	REFERENCE DRAWINGS	NO.	REVISIONS	DATE	SAP WO	SUPV	APPROVED	ENGR	CK'D	MADE	P.E.
		7	TRASH ENCLOSURE REVISIONS	07-20-2022				PN	PN	JR	PN

NO.	REVISIONS	DATE	SAP WO	SUPV	APPROVED	ENGR	CK'D	MADE	P.E.
1	ADDENDUM #1	03-19-2021				PN	PN	JR	PN
2	ENVIRONMENTAL HEALTH PLAN CHECK REVISIONS	06-18-2021				PN	PN	JR	PN
3	ADDENDUM #2	12-03-2021				PN	PN	JR	PN
4	ADDENDUM #3	02-18-2022				PN	PN	JR	PN
5	FIRE DEPARTMENT INSPECTION REVISIONS	05-02-2022				PN	PN	JR	PN
6	STATE WATER BOARD REVISIONS	06-17-2022				PN	PN	JR	PN

LOCATION: BISHOP, CALIFORNIA

BISHOP SERVICE CENTER
SITE DEVELOPEMENT
IRRIGATION PLAN

VOLUME 1

SOUTHERN CALIFORNIA EDISON — An EDISON INTERNATIONAL Company

SHEET NO. L1.0a

SCALE: AS NOTED

43 OF 66 SHTS.

100% CONSTRUCTION DOCUMENTS (06-17-2022)

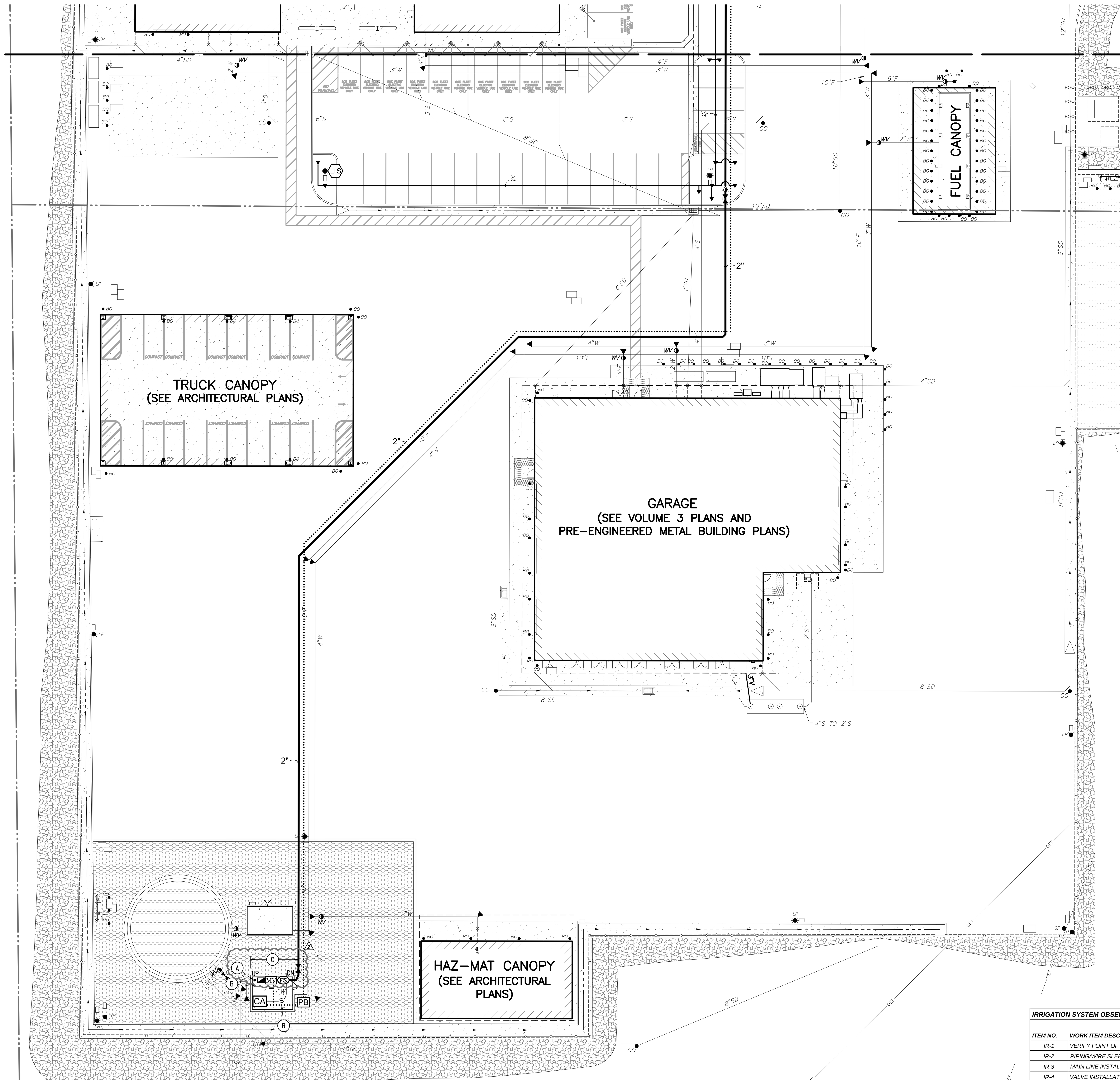

POINT OF CONNECTION:

WATER SERVICE SIZE/MAX FLOW: 2" / 50 GPM

WATER METER SIZE/75% MAX FLOW: N/A

MAXIMUM STATION FLOW: 14.0 GPM

IRRIGATION BACKFLOW SIZE: 2"

IRRIGATION WATER SOURCE: WELL

EXISTING STATIC PRESSURE: 60 PSI
SEE IRRIGATION GENERAL NOTE #3

MINIMUM OPERATING PRESSURE: 20 PSI STREAM SPRAYS
20 PSI BUBBLERS

SCALE: 1"=20'

0 5 20 40
SCALE IN FEET

LEGEND

SYMBOL	MANUFACTURER/MODEL/DESCRIPTION	ARC	PSI	GPM	RADIUS	DETAIL
▼	SHRUB BUBBLER TORO 570Z-6P-PRXCOM-10-SBH-PC3		30	0.22	4'	L/L1.2a
◘	TREE BUBBLER 1.0 TORO 570Z-4-COM-FB-100-PC	360	60	1	3'	K/L1.2a

SYMBOL	MANUFACTURER/MODEL/DESCRIPTION	DETAIL
	REMOTE CONTROL VALVE 1" TORO P220-26-0 GLOBE	H/L1.2a
	REMOTE CONTROL VALVE 3/4" TORO 264-06-03	H/L1.2a
	QUICK COUPLER VALVE TORO 100-2SLVC	I/L1.2a
	RESILENT WEDGE GATE VALVE	G/L1.2a
MV	MASTER VALVE 1" TORO P220S (SCRUBBER VALVE), INSTALL ABOVE GRADE	A/L1.3a
	REDUCED PRESSURE BACKFLOW ASSEMBLY WITH 40 MESH STRAINER. WILKINS 975XL-S	C/L1.3a
CA	IRRIGATION CONTROLLER HUNTER IC-0600-PL WALL-MOUNT	J/L1.2a
S	WIRELESS WEATHER SENSOR HUNTER WSS-SEN, MOUNT ON LIGHT POLE AT +10 FEET ABOVE FINISH GRADE	
FS	FLOW SENSOR 1-1/2" HUNTER HFS WITH FCT-150 TEE FITTING (5-35 GPM), INSTALL ABOVE GRADE	B/L1.3a
PB	PULL BOX	D/L1.3a
	IRRIGATION LATERAL LINE: PVC SCHEDULE 40 SOLVENT WELD, SIZE AS NOTED	C/L1.2a
	IRRIGATION MAINLINE: PVC SCHEDULE 40 SOLVENT WELD, SIZE AS NOTED	A/L1.2a
	PIPE SLEEVE: PVC SCHEDULE 40 TWICE PIPE SIZE	D/L1.2a
	CONTROL WIRE SLEEVE	D/L1.2a
	CONTROL WIRE PLUS ONE (1) COMMON WIRE	E/L1.2a
S	SENSOR CABLE IN CONDUIT	E/L1.2a
	VALVE NUMBER VALVE FLOW (GPM) VALVE SIZE	
•UP/DN	DUCTILE IRON UP/DOWN PIPE RISER	
	PROPOSED TREE, SEE PLANTING PLAN ON SHEET L201 FOR VARIETY AND SIZE	
A	POINT OF CONNECTION	
B	CONTROL WIRE IN CONDUIT TO PULLBOX	
C	PIPE BOTH ABOVE AND BELOW GRADE FROM THE POINT OF CONNECTION TO THE FIRST DOWNSTREAM GATE VALVE OUTSIDE THE PUMP HOUSE SHALL BE DUCTILE IRON WITH VICTAULIC GROOVED FITTINGS	

CONTRACTOR SPECIAL IRRIGATION NOTES:

1. THE CONTRACTOR SHALL PERFORM AN OPERATIONAL ASSESSMENT OF THE EXISTING IRRIGATION SYSTEM WITHIN THE AREA OF WORK WITH THE OWNER'S REPRESENTATIVE PRIOR TO THE START OF CONSTRUCTION OPERATIONS.
2. THE CONTRACTOR SHALL ENSURE THAT ALL EXISTING PLANTING SCHEDULED TO REMAIN SHALL CONTINUE TO BE IRRIGATED THROUGHOUT THE COURSE OF CONSTRUCTION OPERATIONS. ANY DAMAGE TO THE EXISTING IRRIGATION SYSTEM THAT IMPACTS EXISTING PLANTING TO REMAIN SHALL BE IMMEDIATELY REPAIRED TO THE OWNER'S SATISFACTION.
3. PRIOR TO THE START OF ANY SHRUB, GROUND COVER, AND/OR TURFGRASS PLANTING, AN OPERATIONAL REVIEW OF THE IRRIGATION SYSTEM SHALL BE PERFORMED FOR PROPER COVERAGE AND SOIL MOISTURE DEPTH BY THE OWNER'S REPRESENTATIVE. ALL CORRECTIONS AND/OR ADJUSTMENTS SHALL BE COMPLETED AND VERIFIED BY THE OWNER'S REPRESENTATIVE BEFORE GROUND LEVEL PLANTING MAY COMMENCE.
4. THE ORIGINAL IRRIGATION SYSTEM OBSERVATION LOG SHALL BE MAINTAINED ON THE AS-BUILT RECORD DRAWING SET.
5. THE AS-BUILT RECORD DRAWING SET AND OTHER CLOSE-OUT ITEMS SHALL BE SUBMITTED AND ACCEPTED PRIOR TO THE SCHEDULING OF A FINAL ACCEPTANCE REVIEW.
6. UNLESS NOTED OTHERWISE, SALVAGE AND RETURN TO THE OWNER ALL IRRIGATION VALVES, HEADS AND OTHER EQUIPMENT COMPONENTS REMOVED AS PART OF THE WORK. SALVAGED COMPONENTS SHALL BE CLEAN AND IN WORKING CONDITION UNLESS NOTED AS NON-OPERATIONAL DURING THE OPERATIONAL ASSESSMENT.

CERTIFICATE OF COMPLETION REQUIREMENTS:

PER MWELO SECTION 492.9, UPON COMPLETION OF THE LANDSCAPE PLANTING AND IRRIGATION SYSTEM, AND AS A CONDITION OF FINAL ACCEPTANCE AND/OR THE ISSUANCE OF A CERTIFICATE OF OCCUPANCY, THE LICENSED LANDSCAPE CONTRACTOR SHALL SUBMIT TO THE CITY AND TO THE OWNER THE FOLLOWING ITEMS IN A FORM ACCEPTABLE TO THE CITY:

- PROJECT INFORMATION AND CONTACT INFORMATION FOR THE OWNER AND APPLICANT.
- A CERTIFICATION THAT THE INSTALLATION COMPLIES WITH THE APPROVED DOCUMENTATION PACKAGE.
- IRRIGATION SCHEDULING PARAMETERS USED IN PROGRAMMING THE CONTROLLER.
- A PLANTING AND IRRIGATION MAINTENANCE SCHEDULE.
- AN IRRIGATION AUDIT REPORT PREPARED BY A CERTIFIED LANDSCAPE IRRIGATION AUDITOR.
- A HORTICULTURAL SOILS ANALYSIS REPORT AND RECOMMENDATIONS IF NOT SUBMITTED EARLIER WITH THE LANDSCAPE DOCUMENTATION PACKAGE.
- DOCUMENTATION IN THE FORM OF MATERIAL RECEIPTS, INVOICES AND/OR OTHER DOCUMENTS THAT THE RECOMMENDATIONS OF THE HORTICULTURAL SOILS ANALYSIS REPORT AS MODIFIED AND APPROVED BY THE LANDSCAPE ARCHITECT HAVE BEEN IMPLEMENTED AND INSTALLED.

SEE SHEET L1.2a
FOR IRRIGATION NOTES

SEE SHEET L1.2a & L1.3a
FOR IRRIGATION DETAILS

IRRIGATION SYSTEM OBSERVATION LOG

		REVIEWED & ACCEPTED BY OWNER'S REP OR LAND ARCH		
ITEM NO.	WORK ITEM DESCRIPTION	PRINT NAME	SIGNATURE	DATE
IR-1	VERIFY POINT OF CONNECTION & PRESSURE CHECK			
IR-2	PIPING/WIRE SLEEVES UNDER PAVEMENT			
IR-3	MAIN LINE INSTALLATION & PRESSURE TEST			
IR-4	VALVE INSTALLATIONS			
IR-5	IRRIGATION COVERAGE PRIOR TO PLANTING			
IR-6	CONTROL EQUIPMENT INSTALLATION			
IR-7	BOOSTER PUMP INSTALLATION & START-UP (MANUF.)	N/A	N/A	
IR-8	FINAL SYSTEM OPERATION REVIEW			

NOTE: THE ORIGINAL VERSION OF THIS LOG SHALL BE MAINTAINED ON THE AS-BUILT RECORD DRAWING SET.
WORK ITEMS MAY NOT BE REVIEWED IF PRIOR WORK ITEMS HAVE NOT BEEN ACCEPTED.

Know what's below. Call before you dig.

PLANS PREPARED BY:
Blair, Church & Flynn
CONSULTING ENGINEERS

NO.	REVISIONS	DATE	SAP WO	SUPV	APPROVED	ENGR	CK'D	MADE	P.E.
1	ADDENDUM #1	03-19-2021				PN	PN	JR	PN
2	ENVIRONMENTAL HEALTH PLAN CHECK REVISIONS	06-18-2021				PN	PN	JR	PN
3	ADDENDUM #2	12-03-2021				PN	PN	JR	PN
4	ADDENDUM #3	02-18-2022				PN	PN	JR	PN

REFERENCE DRAWINGS | REFERENCE DRAWINGS | NO. | REVISIONS | DATE | SAP WO | SUPV | APPROVED | ENGR | CK'D | MADE | P.E.

LOCATION: BISHOP, CALIFORNIA

BISHOP SERVICE CENTER
SITE DEVELOPEMENT
IRRIGATION PLAN

VOLUME 1

SOUTHERN CALIFORNIA EDISON — An EDISON INTERNATIONAL Company

SHEET NO. L1.1a

SCALE: AS NOTED

44 OF 66 SHTS.

100% CONSTRUCTION DOCUMENTS (12-03-2021)

GENERAL IRRIGATION NOTES:

1. ALL ITEMS IN THE LEGEND ARE TO BE FURNISHED AND INSTALLED, UNLESS NOTED OTHERWISE. THE CONTRACTOR SHALL FURNISH THE ARTICLES, EQUIPMENT, MATERIALS OR PROCESSES SPECIFIED BY NAME. NO SUBSTITUTION WILL BE ALLOWED WITHOUT PRIOR WRITTEN APPROVAL OF THE DESIGN ENGINEER. (ALL MATERIAL REQUIRED SHALL BE NEW AND OF THE BEST QUALITY AVAILABLE)
2. THE DESIGN ENGINEER RESERVES THE RIGHT TO REJECT ANY MATERIAL OR WORK WHICH DOES NOT CONFORM TO THE CONTRACT PLANS AND SPECIFICATIONS WITHOUT THE PRIOR WRITTEN APPROVAL OF THE DESIGN ENGINEER.
3. PRIOR TO STARTING WORK, THE CONTRACTOR SHALL VERIFY THE EXISTING SYSTEM COMPONENTS' LOCATION, SIZES AND ROUTING FOR BACKFLOW PREVENTERS, CONTROLLERS, MAIN AND LATERAL PIPING, VALVES, SPRINKLER HEADS AND CONTROL WIRE; AND SHALL CONFIRM THEIR OPERATIONAL STATUS IN THE PRESENCE OF THE OWNER'S REPRESENTATIVE. THE CONTRACTOR SHALL ALSO VERIFY THE AVAILABLE STATIC PRESSURE AT THE POINT-OF-CONNECTION. FAILURE TO NOTIFY THE OWNER'S REPRESENTATIVE BEFORE STARTING WORK OF ANY DEVIATION FROM THE INFORMATION SHOWN ON THE CONTRACT DOCUMENTS, OR NECESSARY REPAIRS TO THE EXISTING SYSTEM, SHALL MAKE THE CONTRACTOR RESPONSIBLE TO PROVIDE, AT HIS OWN EXPENSE, ANY CORRECTIVE WORK OR COMPONENTS NECESSARY FOR A FULLY FUNCTIONAL SYSTEM WITH FULL COVERAGE.
4. THE CONTRACTOR IS RESPONSIBLE TO PROTECT AND KEEP ANY EXISTING IRRIGATION SYSTEM SCHEDULED TO REMAIN OPERATIONAL AT ALL TIMES DURING THE COURSE OF THIS WORK. THE CONTRACTOR SHALL REPLACE ANY PLANTS DEAD OR DISTRESSED DUE TO THE INTERRUPTION OF EXISTING IRRIGATION SCHEDULES AND SHALL PERFORM ALL WORK NECESSARY TO MAINTAIN THE EXISTING SYSTEM'S OPERATIONAL.
5. THE CONTRACTOR IS RESPONSIBLE TO LOCATE AND PROTECT ALL EXISTING UTILITIES. UTILITIES SHOWN ARE FOR THE CONTRACTOR'S AWARENESS AND NO SURVEY HAS BEEN COMPLETE TO VERIFY THE ACCURACY OF THE UTILITIES SHOWN. IT IS THE CONTRACTORS RESPONSIBILITY TO REPAIR ANY DAMAGED UTILITIES CAUSED BY CONSTRUCTION ACTIVITIES.
6. THE CONTRACTOR SHALL BE RESPONSIBLE TO VERIFY ALL DIMENSIONS SHOWN AND TO ADJUST SAID DIMENSIONS TO FIT SITE CONDITIONS AND ACTUAL EQUIPMENT INSTALLED.
7. THE CONTRACTOR SHALL NOT WILLFULLY INSTALL THE IRRIGATION FACILITIES AS INDICATED ON THE DRAWINGS WHEN IT IS OBVIOUS IN THE FIELD THAT UNKNOWN OBSTRUCTIONS MIGHT NOT HAVE BEEN CONSIDERED IN THE DESIGN. SUCH OBSTRUCTIONS OR DIFFERENCES SHALL BE BROUGHT TO THE ATTENTION OF THE DESIGN ENGINEER.
8. THE IRRIGATION PLAN IS DIAGRAMMATIC. ALL PIPING, VALVES, AND HEADS SHALL BE LOCATED IN PLANTING AREAS WHENEVER POSSIBLE.
9. THE CONTRACTOR SHALL PROVIDE ADEQUATE SAFETY MEASURES TO WARN AND PROTECT THE PUBLIC, OTHER SITE CONTRACTORS AND HIS WORKERS FROM POSSIBLE INJURY DUE TO HIS CONSTRUCTION EQUIPMENT AND OPERATIONS.
10. DUE TO THE SCALE OF THE DRAWINGS, IT IS NOT POSSIBLE TO INDICATE ALL OFFSETS, FITTINGS, ETC. WHICH MAY BE REQUIRED. THE CONTRACTOR SHALL CAREFULLY INVESTIGATE THE STRUCTURAL AND FINISHED CONDITIONS AFFECTING ALL HIS WORK, AND PLAN HIS WORK ACCORDINGLY, FURNISHING SUCH FITTINGS, ETC., AS MAY BE REQUIRED TO INSTALL THE PROPOSED FACILITIES AND ACCOMMODATE THE SITE CONDITIONS. DRAWINGS ARE GENERALLY DIAGRAMMATIC AND INDICATIVE OF THE WORK TO BE DONE TO PROVIDE A COMPLETE AND OPERATIONAL IRRIGATION SYSTEM. ALL WORK TO BE DONE IN ACCORDANCE WITH MANUFACTURER'S RECOMMENDATIONS, LOCAL CODES AND ORDINANCES.
11. VALVES SHALL BE LOCATED IN SHRUB/GROUND COVER AREAS INSTEAD OF IN TURFGRASS AREAS WHENEVER POSSIBLE. VALVES IN ATHLETIC SPORTS FIELDS SHALL BE LOCATED OUTSIDE OF THE FIELD-OF-PLAY TO THE GREATEST EXTENT POSSIBLE.
12. THE CONTRACTOR SHALL REPLACE ANY EXISTING PLANTS SCHEDULED TO REMAIN (SEE LANDSCAPE PLANS) THAT ARE DAMAGED BY THIS WORK WITH NEW PLANTS OF THE SAME SPECIES/VARIETY AND SIZE AS THE ORIGINAL.
13. ANY EXISTING TURFGRASS REMOVED FOR THIS WORK SHALL BE REPLANTED IF VIABLE, OR NEW SOD OF THE SAME SPECIES/VARIETY INSTALLED. THE UPPER 6 INCHES OF THE COMPACTED TRENCH BACKFILL SHALL BE CONDITIONED PER LANDSCAPE SPECIFICATIONS PRIOR TO SOD INSTALLATION. THE NEW SOD SURFACE SHALL BE FLUSH TO THE ADJACENT TURFGRASS WITHOUT HUMPS OR DEPRESSIONS.
14. INSTALL SLEEVES UNDER ALL ASPHALT/CONCRETE IMPROVEMENTS. SLEEVES SHALL BE PVC SCH. 40 PVC OR SDR 35 AND TWICE THE DIAMETER OF THE PIPE UNLESS OTHERWISE NOTED. CONTROL WIRING SHALL BE SLEEVED IN 2" SCH 40 PVC UNLESS OTHERWISE NOTED. MINIMUM DEPTH OF SLEEVES UNDER ALL ASPHALT/CONCRETE IMPROVEMENTS IS 18" BELOW SUBGRADE OR 24" BELOW FINISHED GRADE, WHICHEVER IS GREATER.
15. CONTRACTOR SHALL SAWCUT TO EXISTING JOINTS. REMOVE AND REPLACE SURFACING (CONCRETE, ASPHALT) AS NECESSARY TO INSTALL THE IRRIGATION SYSTEM.
16. THE CONTRACTOR SHALL PROVIDE AND KEEP AN UP-TO-DATE "RECORD DRAWING" SHOWING ALL CHANGES TO THE ORIGINAL DRAWINGS AND EXACT LOCATIONS OF THE FACILITIES INSTALLED. BEFORE FINAL INSPECTION, THE CONTRACTOR SHALL FURNISH MARKED "RECORD DRAWINGS" TO THE INSPECTOR.
17. THE CONTRACTOR SHALL PROVIDE ADJUSTMENT OF NOZZLE ARC AND RADIUS, INCLUDING ANY ALTERNATE NOZZLE TYPES, NECESSARY TO PROVIDE COMPLETE COVERAGE, TO SUIT ACTUAL SITE CONDITIONS, AND TO MINIMIZE OVERSPRAY ONTO HARDSCAPE, PAVEMENT AND/OR STRUCTURES.
18. CONCRETE ANCHORS OR THRUST BLOCKS SHALL BE PROVIDED ON ALL MAIN LINE PIPING. THEY ARE TO BE LOCATED AT ALL ABRUPT CHANGES IN PIPELINE GRADE, CHANGES IN HORIZONTAL ALIGNMENT, REDUCTION IN PIPE SIZES, END OF LINE AND IN-LINE VALVES TO ABSORB ANY AXIAL THRUST OF THE PIPE. THE PIPE MANUFACTURER'S RECOMMENDATIONS FOR THRUST CONTROL SHALL BE FOLLOWED. THRUST BLOCKS MUST BE FORMED AGAINST UNDISTURBED EARTH.
19. ALL MAIN LINE AND LATERAL LINE PIPES UNDER PAVEMENT SHALL BE PRESSURE TESTED WITH THE VALVES INSTALLED. THE CONTRACTOR SHALL PROVIDE ALL EQUIPMENT NEEDED. IF ANY LEAKS DEVELOP, THE REPAIRS ARE TO BE MADE AND THE TEST REPEATED UNTIL THE SYSTEM IS PROVEN WATERTIGHT. THE CONTRACTOR IS TO CENTER LOAD THE PIPE AND LEAVE ALL JOINTS EXPOSED FOR INSPECTION. THE PRESSURE TEST SHALL BE OBSERVED AND APPROVED BY THE OWNER'S REPRESENTATIVE. WHEN THE PIPE IS PROVEN WATERTIGHT AND ONLY THEN MAY THE LINE BE BACKFILLED.
20. WIRED CONNECTIONS BETWEEN THE CONTROLLER AND REMOTE CONTROL VALVES SHALL BE MADE WITH ONE CONTINUOUS DIRECT BURIAL WIRE RUN. A VALVE BOX MUST BE PROVIDED AT THE CONTRACTOR'S EXPENSE AT ALL UNDERGROUND SPLICES.
21. ONLY TEFLON TAPE OR AN APPROVED TEFLON PASTE MAY BE USED AS THE SEALING MATERIAL TO MAKE ALL THREADED CONNECTIONS. A MINIMUM OF TWO (2) WRAPS IN THE DIRECTION OF THE THREADS TO BE USED FOR TAPE. NO OTHER PIPE JOINT MATERIAL WILL BE ALLOWED WITHOUT THE WRITTEN AUTHORIZATION FROM THE DESIGN ENGINEER.
22. THE CONTRACTOR SHALL PROVIDE TWO (2) INDIVIDUALLY BOUND SETS OF OPERATION AND MAINTENANCE MANUALS. THE MANUAL SHALL CONTAIN THE FOLLOWING INFORMATION:
    A. CONTRACTOR'S ADDRESS AND PHONE NUMBER.
    B. DURATION OF GUARANTEE PERIOD (ONE YEAR AFTER FINAL ACCEPTANCE).
    C. NAMES, ADDRESSES AND PHONE NUMBERS OF LOCAL MANUFACTURER REPRESENTATIVES.
    D. COMPLETE SET OF MANUFACTURER'S LITERATURE AND SPECIFICATIONS.
    E. COMPLETE OPERATING AND MAINTENANCE INSTRUCTIONS ON ALL MAJOR EQUIPMENT.
    F. ISSUE A "CERTIFICATE OF CONSTRUCTION COMPLIANCE" WHICH STATES THAT ALL WORK DONE AND MATERIALS AND EQUIPMENT USED ARE IN CONFORMANCE WITH THE APPROVED PLANS, SPECIFICATIONS AND ALL AUTHORIZED REVISIONS.
    G. INITIAL ELECTRICAL DATA ON EACH VALVE:
       (1) OHMMS READING FOR EACH VALVE TAKEN AT THE CONTROLLER.
       (2) VOLTAGE READING FOR EACH VALVE TAKEN BOTH AT THE CONTROLLER AND AT THE VALVE.
23. THE CONTRACTOR SHALL PROVIDE TWO SETS OF CONTROLLER CHARTS. THE CHARTS TO BE A REDUCED DRAWING OF THE ACTUAL PLANS. THE CHARTS SHALL BE COLORED WITH A DIFFERENT COLOR FOR EACH IRRIGATION CIRCUIT. THE CHARTS SHALL BE COVERED IN A WATERTIGHT ENVELOPE.
24. IRRIGATION LINE TRENCHING AND PIPE INSTALLATION LOCATED WITHIN THE CANOPY DRIP LINE OF EXISTING TREES SHALL BE PERFORMED BY HAND OR BY AIR SPADE WITHOUT CUTTING OR DAMAGING EXISTING ROOTS GREATER THAN ONE INCH IN DIAMETER. SEE EXISTING LANDSCAPE PROTECTION SECTION FOR ADDITIONAL REQUIREMENTS.
25. REPLACE ALL DAMAGED EXISTING VALVE BOXES AND/OR LIDS WITHIN THE AREA OF WORK. ADJUST THE ELEVATION OF ALL EXISTING VALVE BOXES WITHIN THE AREA OF WORK TO FINISH GRADE AS NECESSARY TO COMPLY WITH THE VALVE BOX DETAIL.

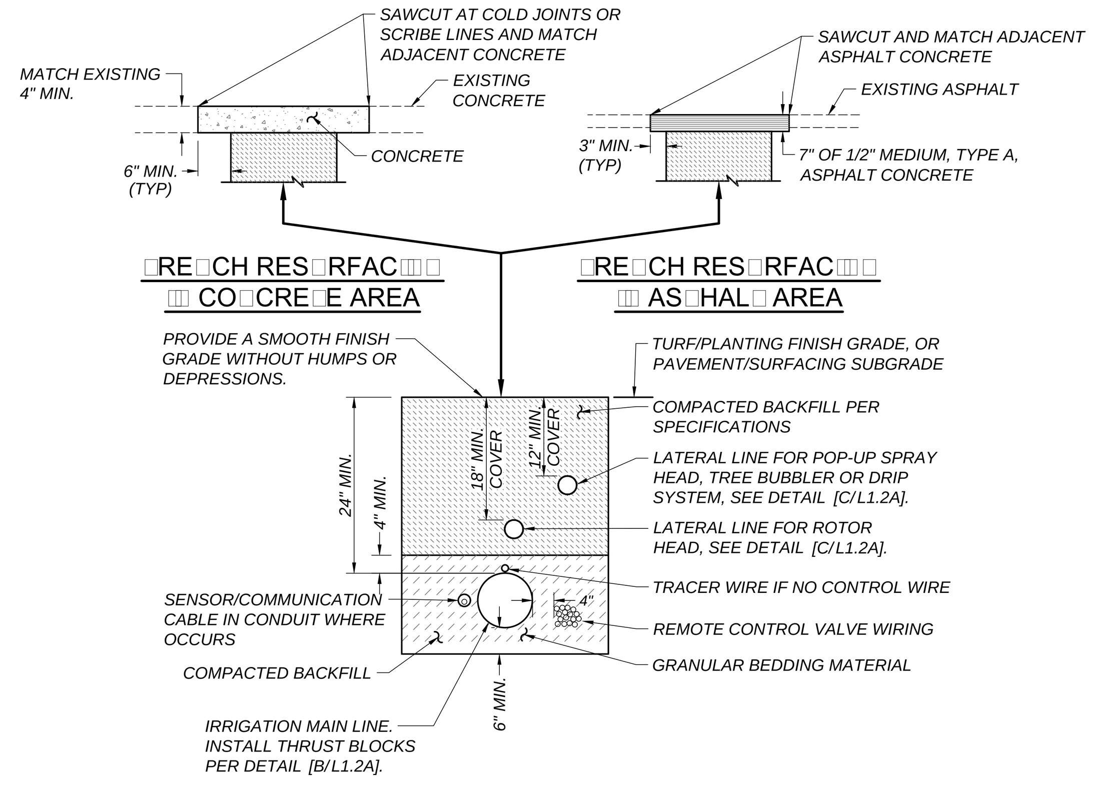

TYPICAL TRENCH SHOWN IN PLANTING AREA

A / L1.2a — IRRIGATION TRENCH BACKFILL
NOT TO SCALE

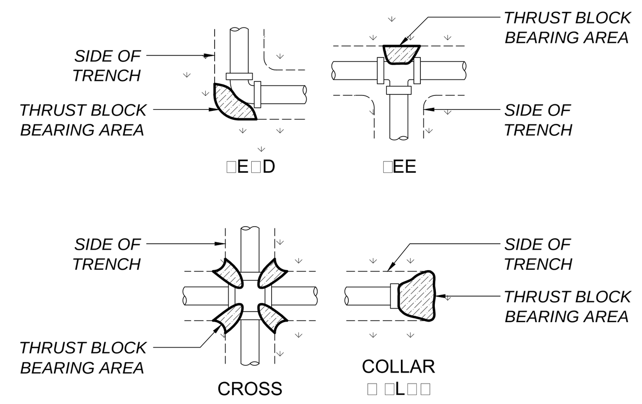

NOTE: CONCRETE PER SPECIFICATIONS. THRUST BLOCKS NOT REQUIRED WITH LESS THAN 2" MAIN LINE

TABLE OF BEARING AREAS REQUIRED (IN SQUARE FEET)

PIPE DIAMETER	*4"	6"	8"	10"	12"
CROSS, TEE, 90° BEND, PLUG, FIRE HYDRANT	1	3	5	8	11
45° BEND	1	2	3	4	6
22-1/2° BEND	0.5	1	2	2	3
11-1/4° BEND	0	0	1	1	2
GATE VALVE (IN-LINE)	0	1	2.5	4	9

B / L1.2a — CONCRETE THRUST BLOCKS
NOT TO SCALE

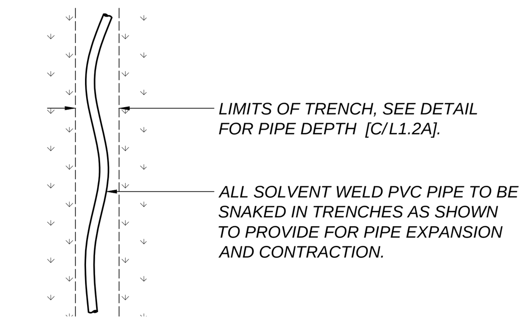

C / L1.2a — SOLVENT WELD PIPE
NOT TO SCALE

CONDUIT/SLEEVE FOR CONTROL WIRE

CONDUIT/SLEEVE SIZE	QTY. 14 GA. WIRE
1"	8 OR LESS
1-1/4"	15
1-1/2"	20
2"	32
2-1/2"	45
3"	70
4"	120

NOTE: SLEEVE FOR PIPE IS 2X THE PIPE DIAMETER

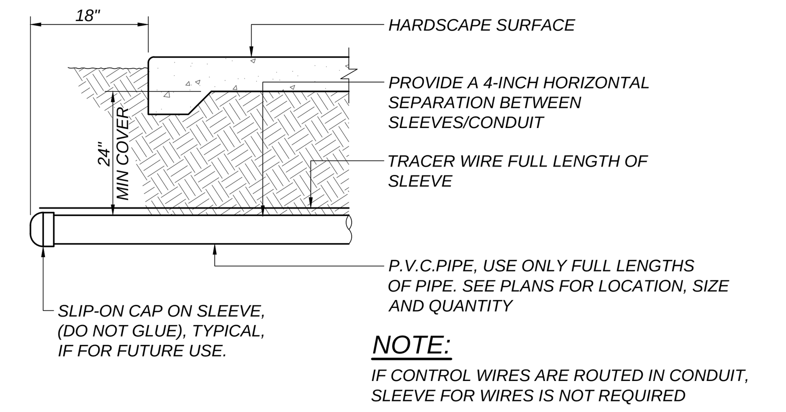

NOTE:
IF CONTROL WIRES ARE ROUTED IN CONDUIT, SLEEVE FOR WIRES IS NOT REQUIRED

D / L1.2a — IRRIGATION SLEEVE/CONDUIT
NOT TO SCALE

NOTES:
1. WIRES UNDER PAVEMENT OR WALKS SHALL BE INSTALLED WITHIN A CONDUIT WHICH HAS BEEN PLACED BY BORING, JACKING OR DRILLING. CONDUIT TO BE PVC SCH 40 TYPE II PIPE. WIRES SHALL NOT BE TAPED TOGETHER INSIDE THE CONDUIT.
2. NO SPLICES ARE ALLOWED BETWEEN POINTS OF CONNECTIONS.
3. A VALVE BOX MUST BE PROVIDED AT ALL UNDERGROUND SPLICE CONNECTIONS.
4. HOT - RED
   COMMON - WHITE
   SPARE HOT - BLACK
   SPARE COMMON - BLUE
   TRACER WIRE - GREEN

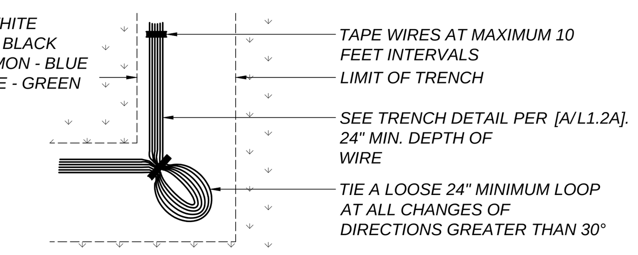

E / L1.2a — IRRIGATION WIRE
NOT TO SCALE

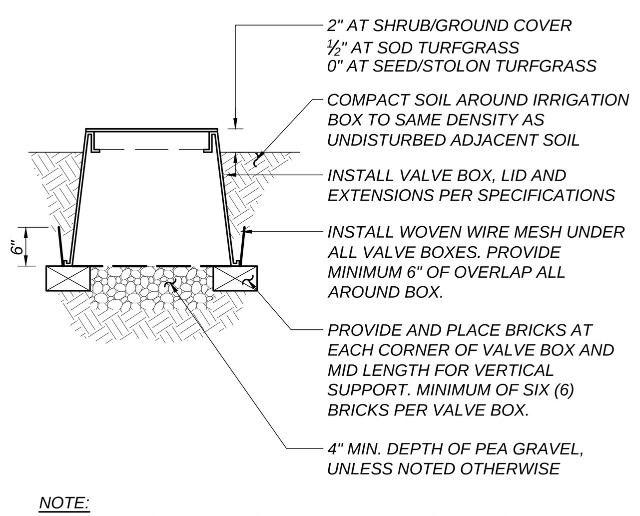

NOTE:
PROVIDE A TRAFFIC RATED CONCRETE BOX AND LID FOR ANY BOX LOCATED IN HARDSCAPE PAVEMENT AND SET FLUSH TO FINISHED SURFACE. PROVIDE A 6"X6" CONCRETE COLLAR AROUND THE BOX IF LOCATED IN ASPHALTIC CONCRETE.

F / L1.2a — IRRIGATION VALVE BOX
NOT TO SCALE

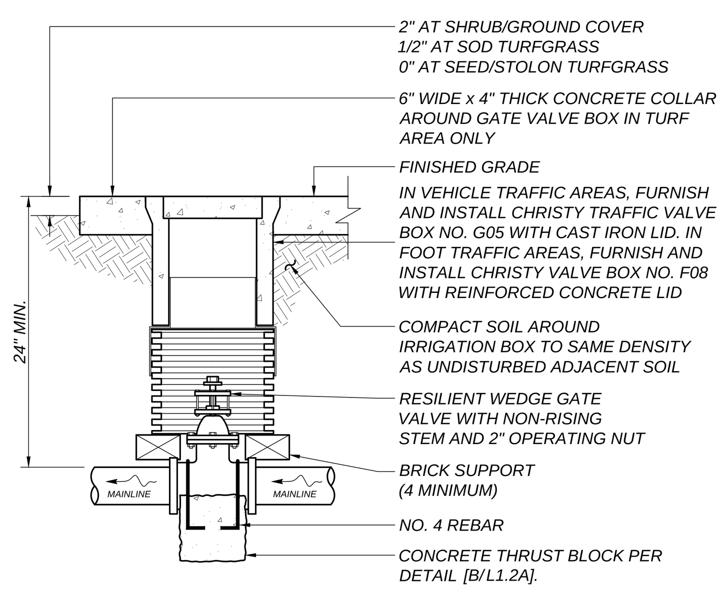

G / L1.2a — 2" AND LARGER GATE VALVE
NOT TO SCALE

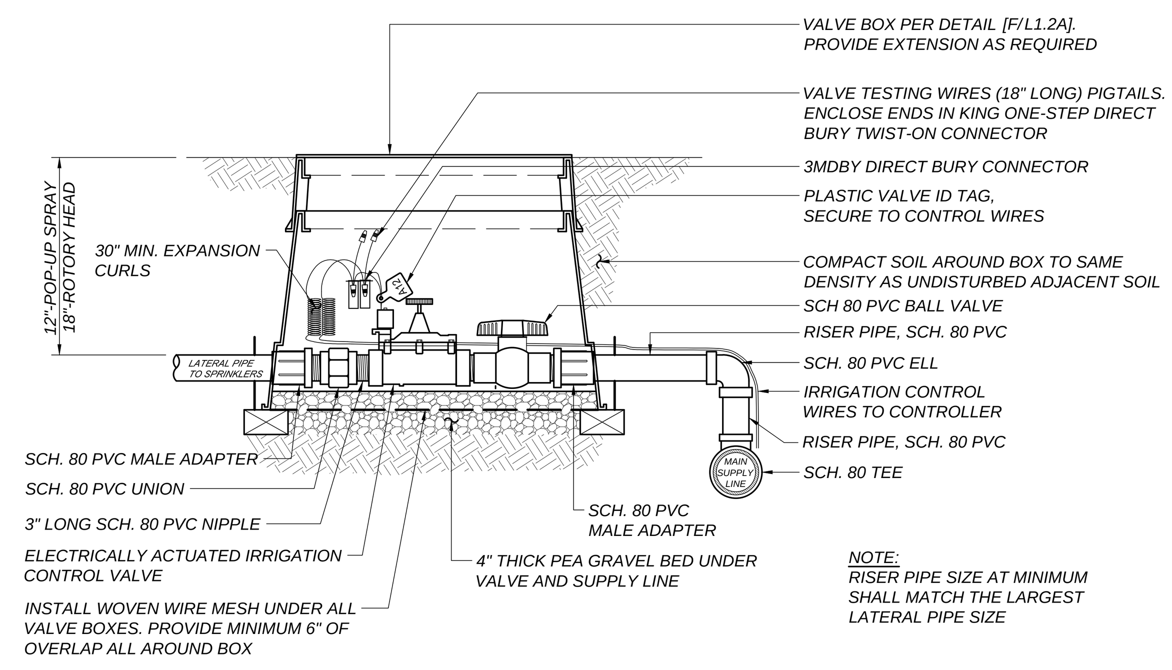

NOTE:
RISER PIPE SIZE AT MINIMUM SHALL MATCH THE LARGEST LATERAL PIPE SIZE

H / L1.2a — REMOTE CONTROL VALVE WITH BALL VALVE ENCLOSURE
NOT TO SCALE

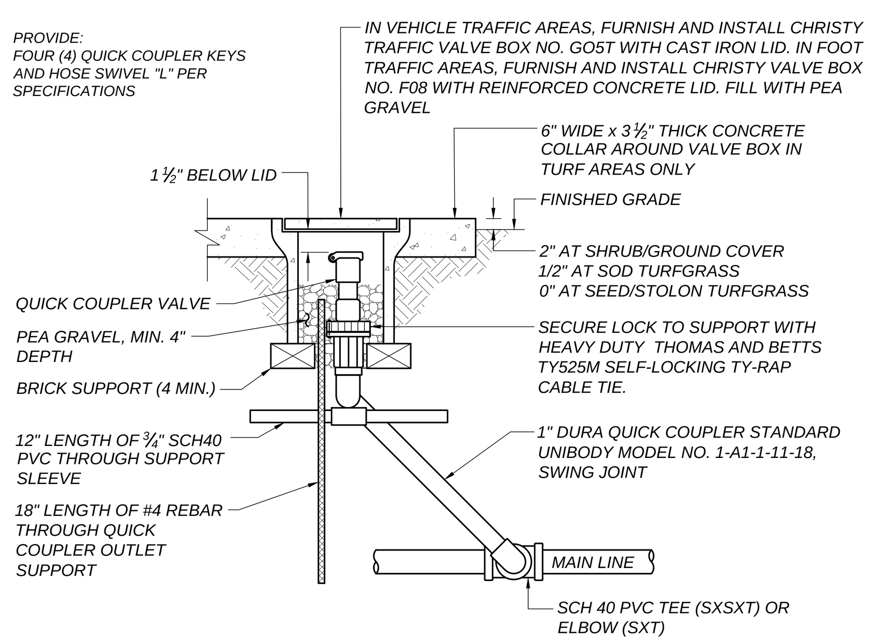

I / L1.2a — QUICK COUPLER VALVE
NOT TO SCALE

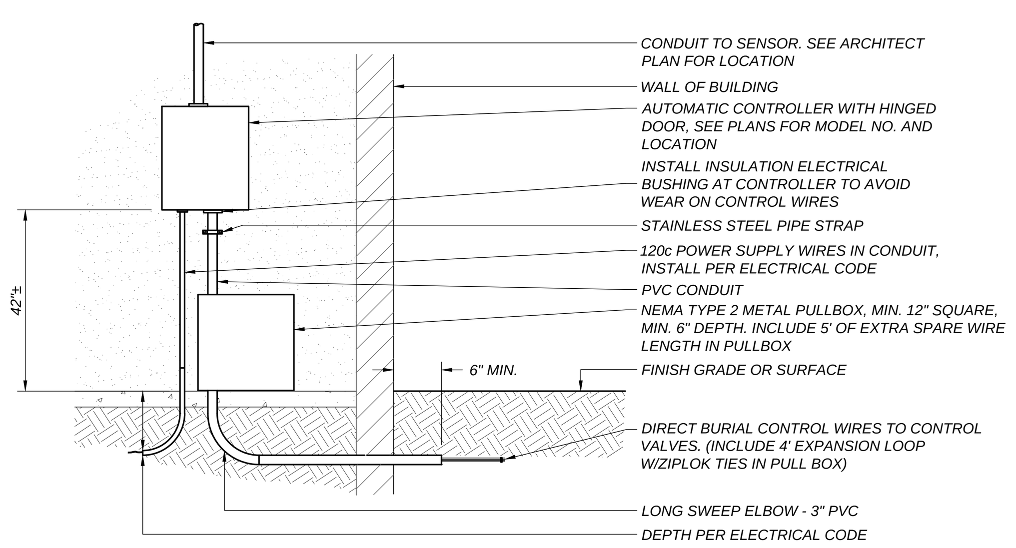

J / L1.2a — EXTERIOR WALL MOUNTED CONTROLLER
NOT TO SCALE

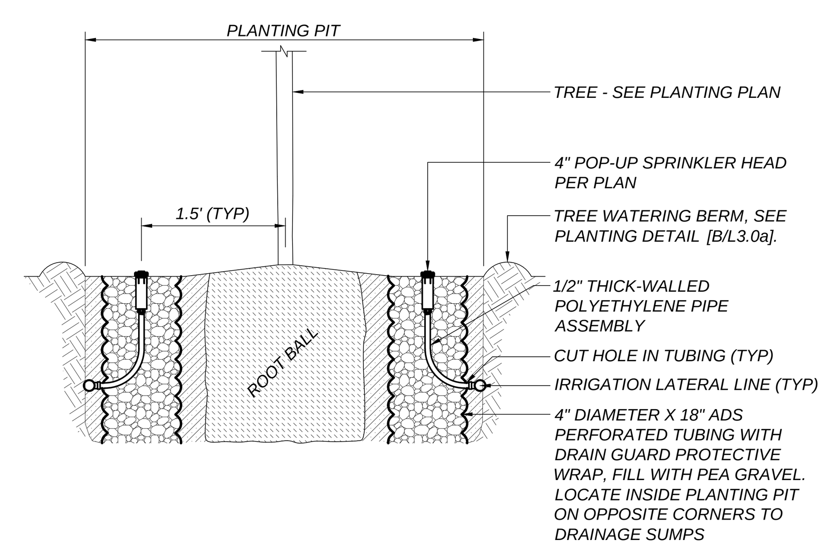

K / L1.2a — TREE BUBBLERS
NOT TO SCALE

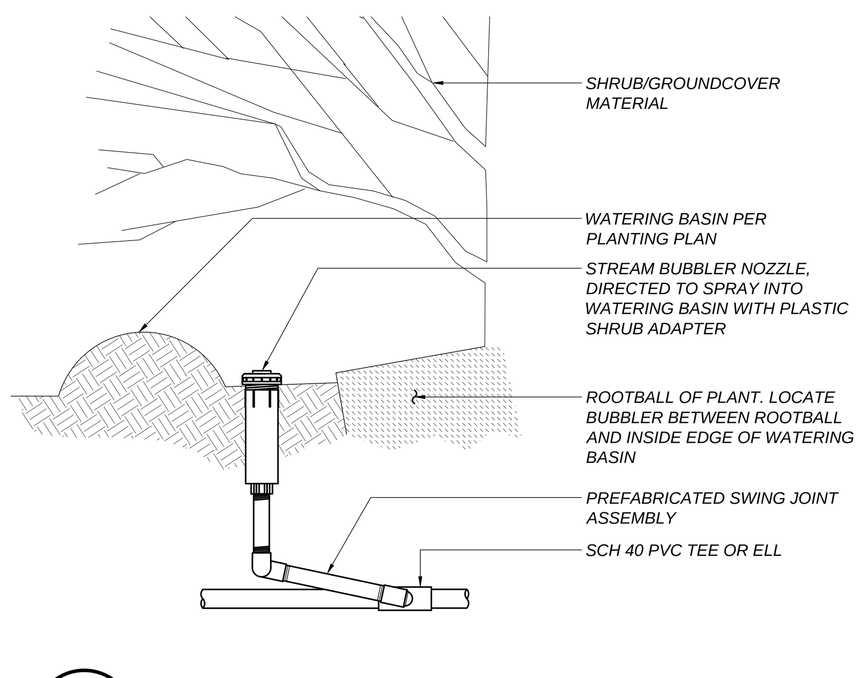

L / L1.2a — SHRUB BUBBLER BASIN DETAIL
NOT TO SCALE

LICENSED LANDSCAPE ARCHITECT — W. BRILEY — Signature — 12/31/20 Renewal Date — 07/14/2020 Date — STATE OF CALIFORNIA

PLANS PREPARED BY:
Blair, Church & Flynn
CONSULTING ENGINEERS
451 Clovis Avenue, Suite 200
Clovis, California 93612
Tel (559) 326-1400
Fax (559) 326-1500

NO.	REVISIONS	DATE	SAP WO	SUPV	APPROVED	ENGR	CK'D	MADE	P.E.
1	ADDENDUM #1	03-19-2021				PN	PN	JR	PN
2	ENVIRONMENTAL HEALTH PLAN CHECK REVISIONS	06-18-2021				PN	PN	JR	PN
3	ADDENDUM #2	12-03-2021				PN	PN	JR	PN
4	ADDENDUM #3	02-18-2022				PN	PN	JR	PN

REFERENCE DRAWINGS | REFERENCE DRAWINGS

LOCATION: BISHOP, CALIFORNIA
BISHOP SERVICE CENTER
SITE DEVELOPEMENT
IRRIGATION DETAILS
VOLUME 1
SOUTHERN CALIFORNIA EDISON — An EDISON INTERNATIONAL Company

SHEET NO. L1.2a
SCALE: AS NOTED
45 OF 66 SHTS.

100% CONSTRUCTION DOCUMENTS (12-03-2021)

Drawing: P:\219-0301\Site\productiondrawings\01 - Site\219301irdt01.dwg; L1.2a Irrigation Details - BCF.ctb
Plot by: jredelfs Feb 23, 2022 - 7:45am

SOUTHERN CALIFORNIA EDISON
2012 - 5 SIZE

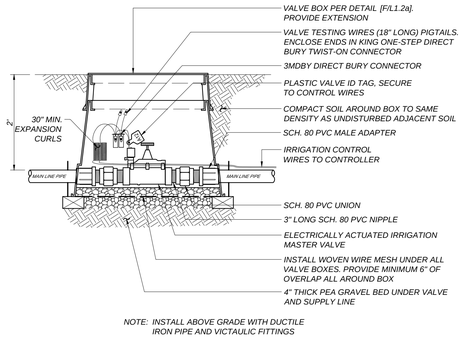

A / L1.3a MASTER VALVE

NOT TO SCALE

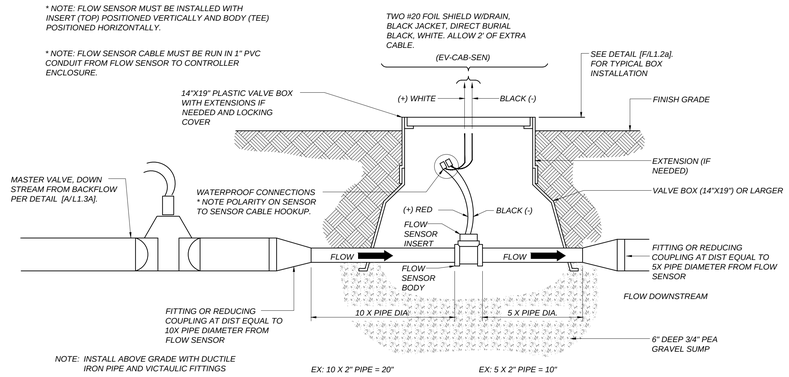

□ / L1.3a FLOW SENSOR AND MASTER VALVE

NOT TO SCALE

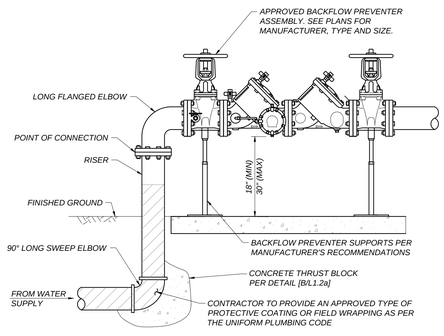

C / L1.3a BACKFLOW PREVENTER

NOT TO SCALE

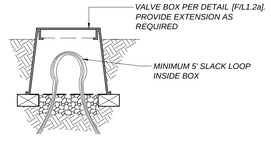

D / L1.3a PULL BOX

NOT TO SCALE

NO.	REVISIONS	DATE	SAP WO	SUPV	APPROVED	ENGR	CK'D	MADE	P.E.
1	ADDENDUM #1	03-19-2021				PN	PN	JR	PN
2	ENVIRONMENTAL HEALTH PLAN CHECK REVISIONS	06-18-2021				PN	PN	JR	PN
3	ADDENDUM #2	12-03-2021				PN	PN	JR	PN
4	ADDENDUM #3	02-18-2022				PN	PN	JR	PN

REFERENCE DRAWINGS | REFERENCE DRAWINGS | NO. | REVISIONS | DATE | SAP WO | SUPV | APPROVED | ENGR | CK'D | MADE | P.E.

LOCATION: BISHOP, CALIFORNIA

BISHOP SERVICE CENTER
SITE DEVELOPEMENT
IRRIGATION DETAILS

VOLUME 1

SOUTHERN CALIFORNIA EDISON — An EDISON INTERNATIONAL Company

SHEET NO. L1.3a

SCALE: AS NOTED

46 OF 66 SHTS.

PLANS PREPARED BY:
Blair, Church & Flynn
CONSULTING ENGINEERS
4551 Clovis Avenue, Suite 200
Clovis, California 93612
Tel (559) 326-5400
Fax (559) 326-1900

REGISTERED LANDSCAPE ARCHITECT — BRILEY ALLEN JONES — Signature — 12/31/20 — Expiration Date — 07/14/2020 — STATE OF CALIFORNIA

100% CONSTRUCTION DOCUMENTS (12-03-2021)

Drawing: P:\219-030\SI\Engproduction\Drawings\01 - Site\219301lrctd1.dwg; L1.3a Irrigation Details - BCF.ctb
Plot by: jrodriguez Feb 24, 2022 - 7:04pm

SOUTHERN CALIFORNIA EDISON
2012 - 5 SIZE

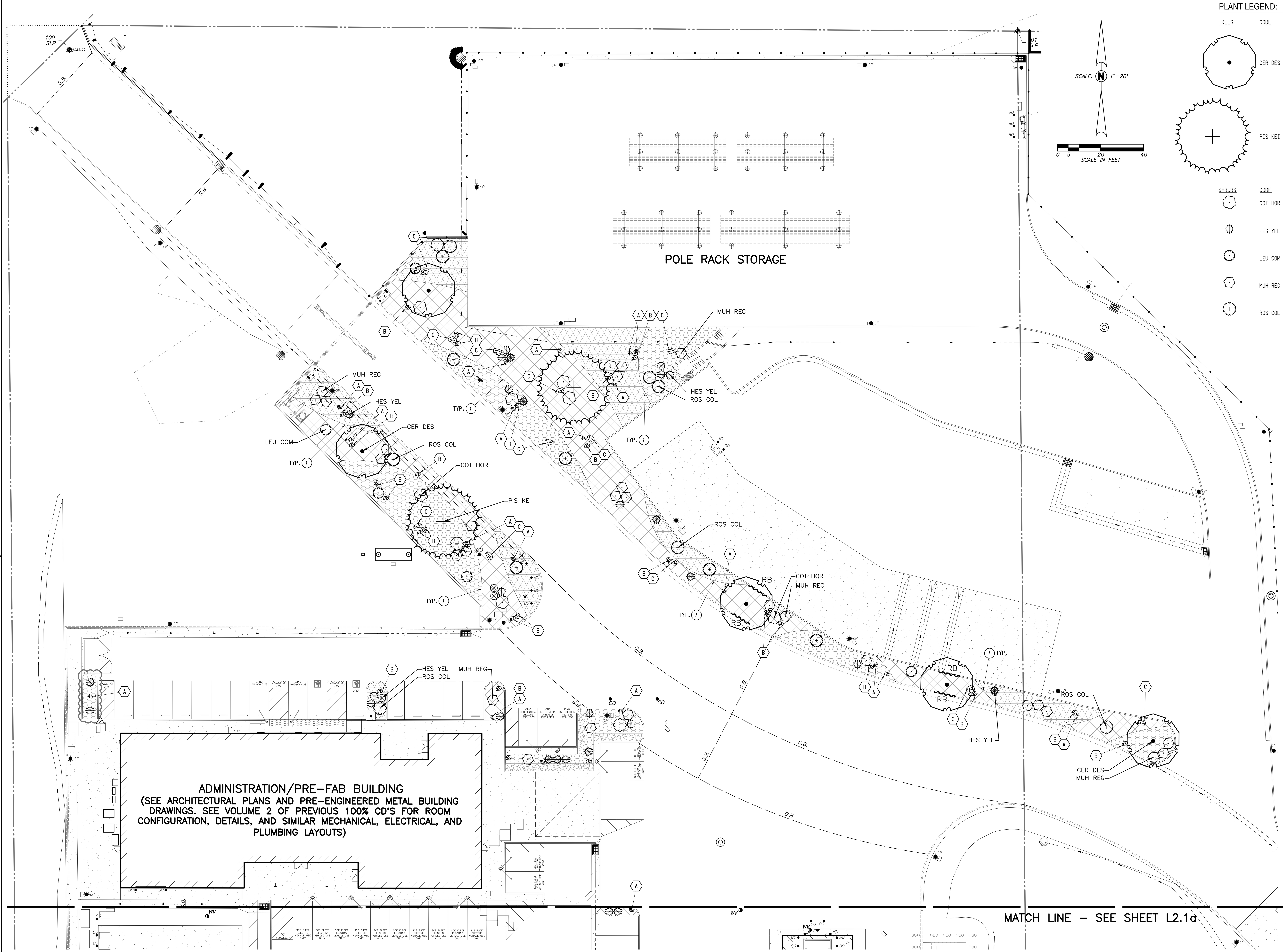

PLANT LEGEND:

SUNSET ZONE: 10

TREES	CODE	BOTANICAL / COMMON NAME	CONT	WATER USE	QTY	DETAIL	REMARKS
	CER DES	CERCIDIUM X 'DESERT MUSEUM' THORNLESS PALO VERDE	24"BOX	L	5	A/L3.0a	DECIDUOUS, STANDARD FORM
	PIS KEI	PISTACIA CHINENSIS 'KEITH DAVEY' KEITH DAVEY CHINESE PISTACHE	24"BOX	L	2	A/L3.0a	DECIDUOUS, STANDARD FORM

SHRUBS	CODE	BOTANICAL / COMMON NAME	SIZE	WATER USE	QTY	DETAIL	REMARKS
	COT HOR	COTONEASTER HORIZONTALIS ROCK COTONEASTER	5 GAL	L	8	B/L3.0a	SPREADING 3'H X 15'W
	HES YEL	HESPERALOE PARVIFLORA 'YELLOW' YELLOW YUCCA	5 GAL	L	35	B/L3.0a	3-4'H X 3-4'W
	LEU COM	LEUCOPHYLLUM FRUTESCENS 'COMPACTA' COMPACT TEXAS RANGER	5 GAL	L	5	B/L3.0a	5'H X 5'W
	MUH REG	MUHLENBERGIA CAPILLARIS 'REGAL MIST' REGAL MIST PINK MUHLY GRASS	5 GAL	L	29	B/L3.0a	3'H X 6'W
	ROS COL	ROSMARINUS OFFICINALIS 'COLLINGWOOD INGRAM' ROSEMARY	5 GAL	L	19	B/L3.0a	2-3'H X 4'W

LEGEND:

			QTY	DETAIL
	ROCK 1	DECORATIVE ROCK: ¾" BLUE GRANITE INSTALL OVER WEED-FILTER FABRIC. FINAL SELECTION APPROVED BY SCE'S REPRESENTATIVE.	7,613 SF	D/L3.0a
	ROCK 2	DECORATIVE ROCK: ¾" CALIFORNIA GOLD INSTALL OVER WEED-FILTER FABRIC. FINAL SELECTION APPROVED BY SCE'S REPRESENTATIVE.	4,271 SF	D/L3.0a
	ROCK 3	DECORATIVE ROCK: ¾" WINE RED ROCK INSTALL OVER WEED-FILTER FABRIC. FINAL SELECTION APPROVED BY SCE'S REPRESENTATIVE.	4,855 SF (7)	D/L3.0a
	DG	STABILIZED DECOMPOSED GRANITE: TAN/BROWN COLOR SURFACING	295 SF	D/L3.0a
A B C	BOULDER	DECORATIVE GRANITE BOULDERS FINAL BOULDER SELECTION SHALL BE APPROVED BY SCE'S REPRESENTATIVE PRIOR TO INSTALLATION	A:22 B:27 C:12	E/L3.0a E/L3.0a E/L3.0a
RB		ROOT BARRIER UB24-2		C/L3.0a
1		1" x 4" TREX BENDER BRD. WITH REQUIRED STAKE		D/L3.0a

WATER CONSERVATION COMPLIANCE STATEMENT:

I HAVE COMPLIED WITH THE CRITERIA OF THE LANDSCAPE WATER CONSERVATION ORDINANCE AND GUIDELINES, AND HAVE APPLIED THEM FOR THE EFFICIENT USE OF WATER IN THE IRRIGATION DESIGN PLAN.

DAVID W. BRILEY, RLA 2787

SEE SHEET L3.0a FOR PLANTING NOTES AND DETAILS

Know what's below. Call before you dig.

LICENSED LANDSCAPE ARCHITECT
DAVID W. BRILEY NO.
Signature
12/31/20 Renewal Date
07/14/2020 Date
STATE OF CALIFORNIA

PLANS PREPARED BY:
Blair, Church & Flynn
CONSULTING ENGINEERS
451 Clovis Avenue, Suite 200
Clovis, California 93612
Tel (559) 326-1400
Fax (559) 326-1500

NO.	REVISIONS	DATE	SAP WO	SUPV	APPROVED	ENGR	CK'D	MADE	P.E.
1	ADDENDUM #1	03-19-2021				PN	PN	JR	PN
2	ENVIRONMENTAL HEALTH PLAN CHECK REVISIONS	06-18-2021				PN	PN	JR	PN
3	ADDENDUM #2	12-03-2021				PN	PN	JR	PN
4	ADDENDUM #3	02-18-2022				PN	PN	JR	PN
5	FIRE DEPARTMENT INSPECTION REVISIONS	05-02-2022				PN	PN	JR	PN
6	STATE WATER BOARD REVISIONS	06-17-2022				PN	PN	JR	PN
7	TRASH ENCLOSURE REVISIONS	07-20-2022				PN	PN	JR	PN

REFERENCE DRAWINGS	REFERENCE DRAWINGS

LOCATION: BISHOP, CALIFORNIA

BISHOP SERVICE CENTER
SITE DEVELOPEMENT
PLANTING PLAN

VOLUME 1

SOUTHERN CALIFORNIA EDISON — An EDISON INTERNATIONAL Company

SHEET NO. L2.0a

SCALE: AS NOTED

47 OF 66 SHTS.

100% CONSTRUCTION DOCUMENTS (06-17-2022)

Drawing: P:\219-0301\Site\ProductionDrawings\01 - Site\219301L01.dwg; L2.0a Planting Plan - BCF.ctb
Plot by: jredeifs Jul 21, 2022 - 10:55pm
SOUTHERN CALIFORNIA EDISON
2012 - 5 SIZE

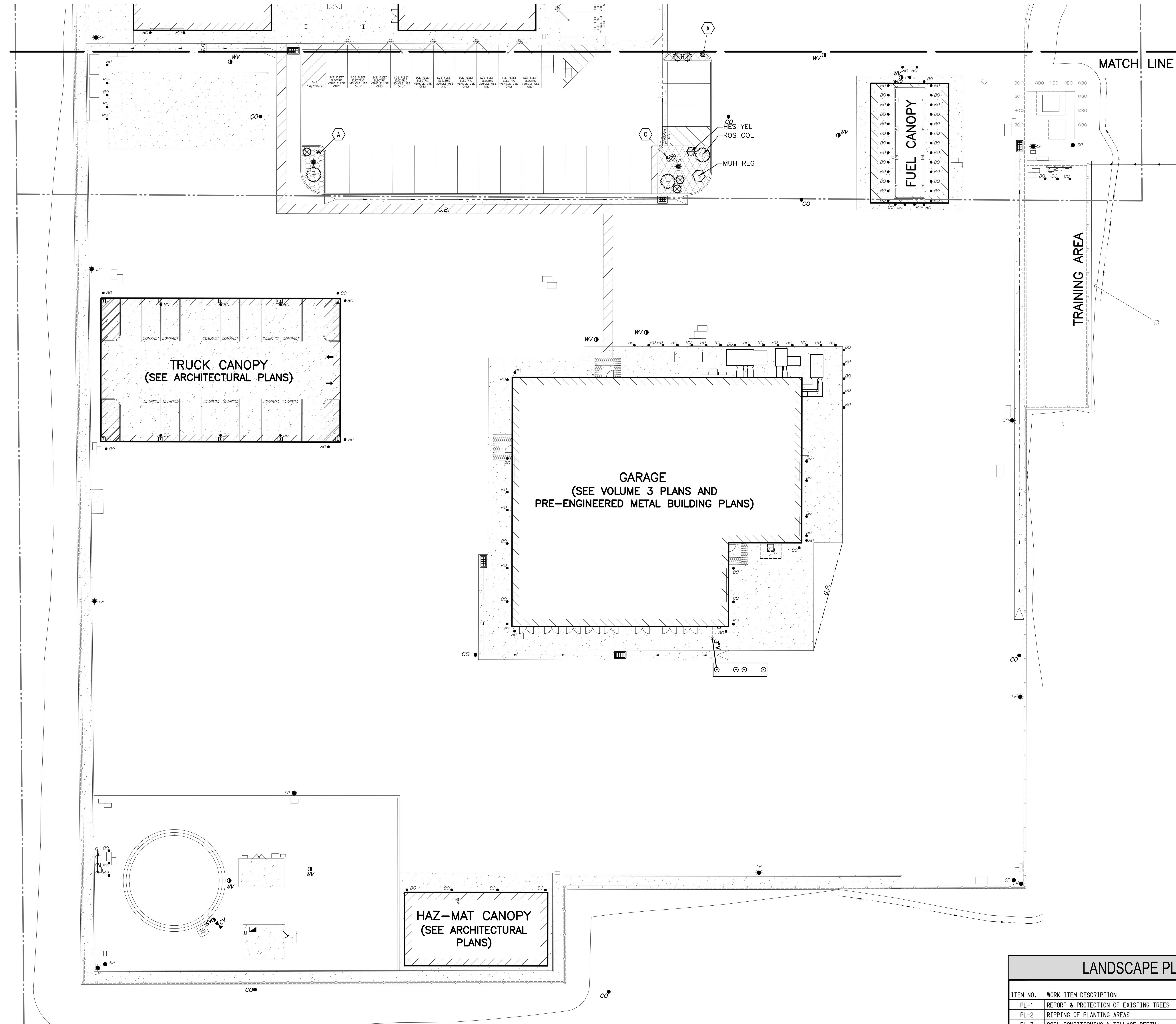

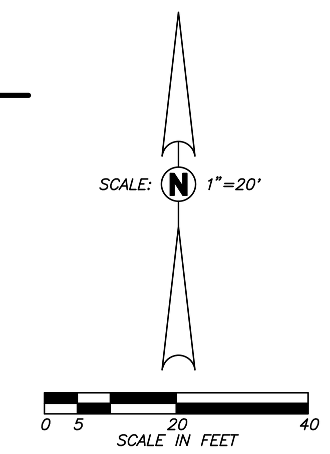

PLANT LEGEND

SUNSET ZONE: 10

TREES	CODE	BOTANICAL / COMMON NAME	CONT	WATER USE	QTY	DETAIL	REMARKS
	CER DES	CERCIDIUM X 'DESERT MUSEUM' THORNLESS PALO VERDE	24"BOX	L	5	A/L3.0a	DECIDUOUS, STANDARD FORM
	PIS KEI	PISTACIA CHINENSIS 'KEITH DAVEY' KEITH DAVEY CHINESE PISTACHE	24"BOX	L	2	A/L3.0a	DECIDUOUS, STANDARD FORM

SHRUBS	CODE	BOTANICAL / COMMON NAME	SIZE	WATER USE	QTY	DETAIL	REMARKS
	COT HOR	COTONEASTER HORIZONTALIS ROCK COTONEASTER	5 GAL	L	8	B/L3.0a	SPREADING 3'H X 15'W
	HES YEL	HESPERALOE PARVIFLORA 'YELLOW' YELLOW YUCCA	5 GAL	L	35 (1)	B/L3.0a	3-4'H X 3-4'W
	LEU COM	LEUCOPHYLLUM FRUTESCENS 'COMPACTA' COMPACT TEXAS RANGER	5 GAL	L	5	B/L3.0a	5'H X 5'W
	MUH REG	MUHLENBERGIA CAPILLARIS 'REGAL MIST' REGAL MIST PINK MUHLY GRASS	5 GAL	L	29	B/L3.0a	3'H X 6'W
	ROS COL	ROSMARINUS OFFICINALIS 'COLLINGWOOD INGRAM' ROSEMARY	5 GAL	L	19	B/L3.0a	2-3'H X 4'W

LEGEND

			QTY	DETAIL
	ROCK 1	DECORATIVE ROCK: ¾" BLUE GRANITE INSTALL OVER WEED-FILTER FABRIC. FINAL SELECTION APPROVED BY SCE'S REPRESENTATIVE.	7,613 SF	D/L3.0a
	ROCK 2	DECORATIVE ROCK: ¾" CALIFORNIA GOLD INSTALL OVER WEED-FILTER FABRIC. FINAL SELECTION APPROVED BY SCE'S REPRESENTATIVE.	4,271 SF	D/L3.0a
	ROCK 3	DECORATIVE ROCK: ¾" WINE RED ROCK INSTALL OVER WEED-FILTER FABRIC. FINAL SELECTION APPROVED BY SCE'S REPRESENTATIVE.	4,734 SF (1)	D/L3.0a
	DG	STABILIZED DECOMPOSED GRANITE: TAN/BROWN COLOR SURFACING	368 SF	D/L3.0a
A, B, C	BOULDER	DECORATIVE GRANITE BOULDERS FINAL BOULDER SELECTION SHALL BE APPROVED BY SCE'S REPRESENTATIVE PRIOR TO INSTALLATION	A:22 B:27 C:12	E/L3.0a E/L3.0a E/L3.0a
RB		ROOT BARRIER UB24-2		C/L3.0a
1		1" x 4" TREX BENDER BRD. WITH REQUIRED STAKE		D/L3.0a

SEE SHEET L3.0a FOR PLANTING NOTES AND DETAILS

LANDSCAPE PLANTING OBSERVATION LOG

ITEM NO.	WORK ITEM DESCRIPTION	REVIEWED & ACCEPTED BY OWNER'S REP OR LAND ARCH		DATE
		PRINT NAME	SIGNATURE	
PL-1	REPORT & PROTECTION OF EXISTING TREES			
PL-2	RIPPING OF PLANTING AREAS			
PL-3	SOIL CONDITIONING & TILLAGE DEPTH			
PL-4	IRRIGATION COVERAGE PRIOR TO PLANTING			
PL-5	FINISH GRADING PRIOR TO PLANTING			
PL-6	TREES - INITIAL QUALITY & LAYOUT			
PL-7	PLANTS - INITIAL QUALITY & LAYOUT			
PL-8	MULCH DEPTH			

NOTE: THE ORIGINAL VERSION OF THIS LOG SHALL BE MAINTAINED ON THE AS-BUILT RECORD DRAWING SET.
WORK ITEMS MAY NOT BE REVIEWED IF PRIOR ITEMS HAVE NOT BEEN ACCEPTED.

Know what's **below.** Call before you dig.

PLANS PREPARED BY:
Blair, Church & Flynn
CONSULTING ENGINEERS
451 Clovis Avenue, Suite 200
Clovis, California 93612
Tel (559) 326-1400
Fax (559) 326-1500

NO.	REVISIONS	DATE	SAP WO	SUPV	APPROVED	ENGR	CK'D	MADE	P.E.
1	ADDENDUM #1	03-19-2021				PN	PN	JR	PN
2	ENVIRONMENTAL HEALTH PLAN CHECK REVISIONS	06-18-2021				PN	PN	JR	PN
3	ADDENDUM #2	12-03-2021				PN	PN	JR	PN
4	ADDENDUM #3	02-18-2022				PN	PN	JR	PN

REFERENCE DRAWINGS | REFERENCE DRAWINGS

LOCATION: BISHOP, CALIFORNIA

BISHOP SERVICE CENTER
SITE DEVELOPEMENT
PLANTING PLAN

VOLUME 1

SOUTHERN CALIFORNIA EDISON — An EDISON INTERNATIONAL Company

SHEET NO. L2.1a

SCALE: AS NOTED

48 OF 66 SHTS.

100% CONSTRUCTION DOCUMENTS (12-03-2021)

SOUTHERN CALIFORNIA EDISON
2012 - 5 SIZE

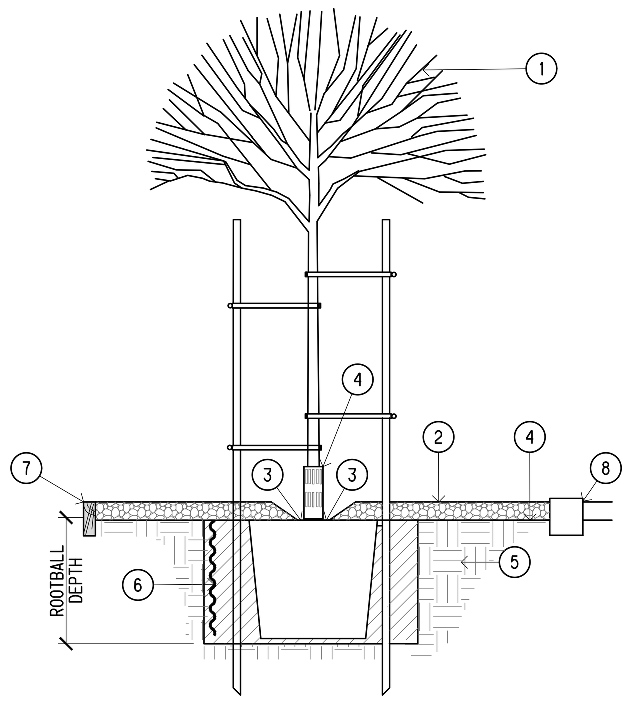

LEGEND:

1. TREE PER PLANTING PLAN.
2. ROCK MULCH. MINIMUM 3" DEEP. HOLD ½" BELOW HARDSCAPE OR HEARDER.
3. HOLD SURFACING 2" AWAY FROM TRUNK AND TRANSITION TO FULL DEPTH OVER 6".
4. FINISH GRADE.
5. SITE SOIL.
6. ROOT CONTROL BARRIER WHERE REQUIRED. SEE PLANTING NOTES AND DETAIL C/L2.4a
7. HEADER WHERE OCCURS. SEE DETAIL D/L2.4a
8. HARDSCAPE FEATURE. SEE SITE PLAN.

A/L3.0a DOUBLE STAKE TREE PLANTING @ DECORATIVE ROCK
NOT TO SCALE

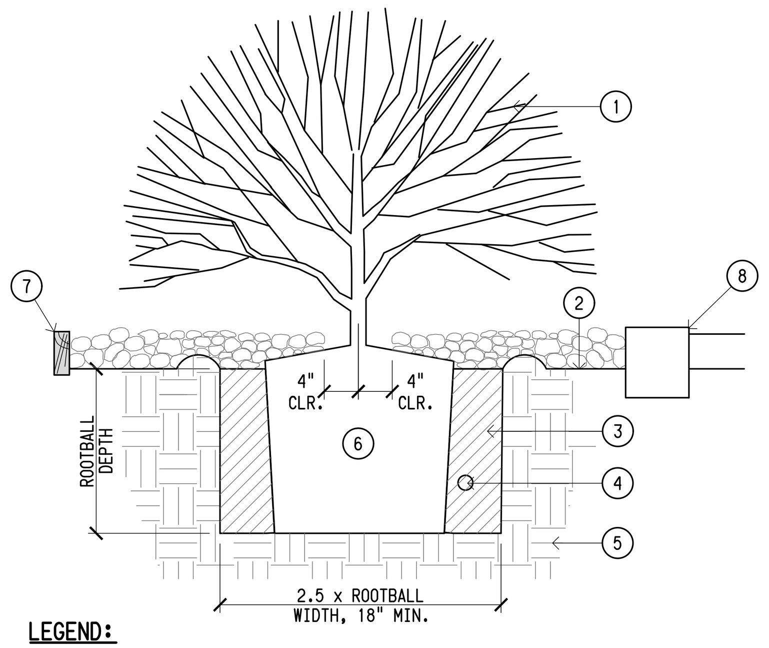

LEGEND:

1. SHRUB PLANTING.
2. FINISH GRADE.
3. AMENDED BACKFILL. SEE SPECIFICATIONS.
4. FERTILIZER TABLET. SEE SPECIFICATIONS.
5. SITE SOIL.
6. ROOTBALL. SET TOP OF ROOTBALL 1" ABOVE FINISH GRADE.
7. WOOD HEADER WHERE OCCURS. SEE LANDSCAPE PLAN AND DETAIL D/L3.0a.
8. HARDSCAPE FEATURE. SEE SITE PLAN.

B/L3.0a SHRUB PLANTING @ DECORATIVE ROCK
NOT TO SCALE

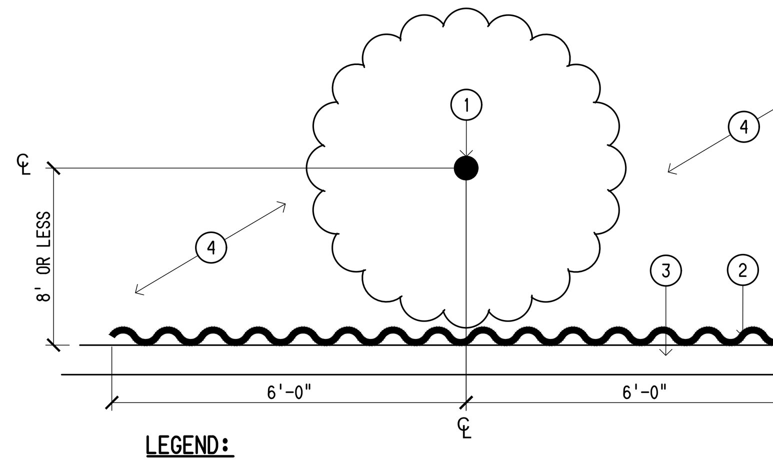

LEGEND:

1. TREE TRUNK.
2. 12 LF OF 24"-DEEP ROOT CONTROL BARRIER: DEEP ROOT UB24-2 OR EQUIVALENT. CENTER BARRIER ON TRUNK OF TREE. INSTALL PER MANUFACTURER'S SPECIFICATIONS.
3. HARDSCAPE ELEMENT: CURB, SIDEWALK, WALL, ETC.
4. PLANTING AREA.
5. INSTALL ROOT CONTROL BARRIER ON ALL SIDES OF THE PLANTING AREA WHEN SURROUNDED BY HARDSCAPE WITHIN 8' OF THE TREE TRUNK.

C/L3.0a ROOT CONTROL BARRIER
NOT TO SCALE

LEGEND:

1. DECORATIVE ROCK SURFACE. SEE SPECIFICATIONS FOR MATERIALS AND METHODS. CONTRACTOR TO SUBMIT SAMPLE FOR APPROVAL.
2. MINIMUM THREE (3) INCH DEPTH OF DG.
3. 1 x 4 TREX BENDER BRD. BUTT JOINTS SHALL BE BEVELED AT 30 DEGREES.
4. NON-WOVEN GEOTEXTILE FABRIC, MINIMUM 4.0 Oz/Yd2. WRAP UP 1-1/2" HIGH ON ALL SIDES.
5. RIP SUBGRADE TO A DEPTH OF 6" AND RECOMPACT TO 90% RELATIVE DENSITY.
6. FINISH GRADE IN PLANTING AREA. SEE DETAIL [B/L3.0a].
7. ADJACENT PAVED SURFACE OR CURB WHERE OCCURS. WHERE DECORATIVE ROCK IS ADJACENT TO A HARDSCAPE SURFACE, THE TOP OF DG IS TO BE FLUSH WITH THE FINISH SURFACE.

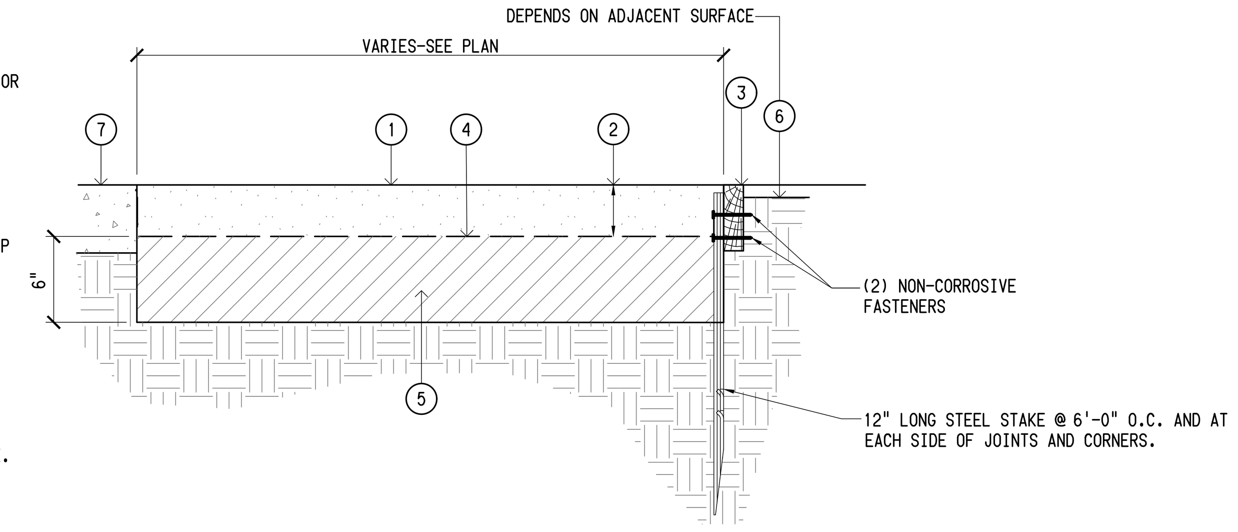

D/L3.0a DECORATIVE ROCK SURFACING
NOT TO SCALE

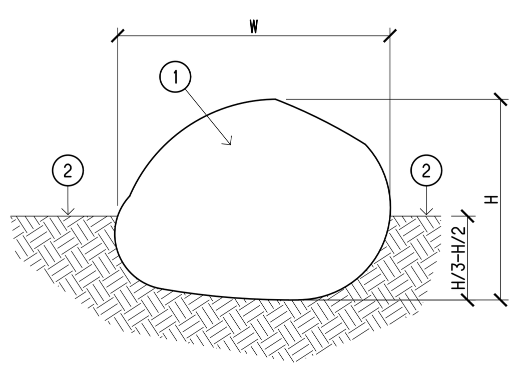

LEGEND:

1. BOULDER - SEE PLANTING PLAN
2. FINISH GRADE

TYPE	H (MINIMUM)	W (MINIMUM)
A	1' APPROX.	2' APPROX.
B	2' APPROX.	3' APPROX.
C	3' APPROX.	5' APPROX.

E/L3.0a BOULDER INSTALLATION
NOT TO SCALE

CERTIFICATE OF COMPLETION REQUIREMENTS:

PER MWELO SECTION 492.9, UPON COMPLETION OF THE LANDSCAPE PLANTING AND IRRIGATION SYSTEM, AND AS A CONDITION OF FINAL ACCEPTANCE AND/OR THE ISSUANCE OF A CERTIFICATE OF OCCUPANCY, THE LICENSED LANDSCAPE CONTRACTOR SHALL SUBMIT TO THE CITY AND TO THE OWNER THE FOLLOWING ITEMS IN A FORM ACCEPTABLE TO THE CITY:

- PROJECT INFORMATION AND CONTACT INFORMATION FOR THE OWNER AND APPLICANT.
- A CERTIFICATION THAT THE INSTALLATION COMPLIES WITH THE APPROVED DOCUMENTATION PACKAGE.
- IRRIGATION SCHEDULING PARAMETERS USED IN PROGRAMMING THE CONTROLLER.
- A PLANTING AND IRRIGATION MAINTENANCE SCHEDULE.
- AN IRRIGATION AUDIT REPORT PREPARED BY A CERTIFIED LANDSCAPE IRRIGATION AUDITOR.
- A HORTICULTURAL SOILS ANALYSIS REPORT AND RECOMMENDATIONS IF NOT SUBMITTED EARLIER WITH THE LANDSCAPE DOCUMENTATION PACKAGE.
- DOCUMENTATION IN THE FORM OF MATERIAL RECEIPTS, INVOICES AND/OR OTHER DOCUMENTS THAT THE RECOMMENDATIONS OF THE HORTICULTURAL SOILS ANALYSIS REPORT AS MODIFIED AND APPROVED BY THE LANDSCAPE ARCHITECT HAVE BEEN IMPLEMENTED AND INSTALLED.

PLANTING NOTES:

1. IMMEDIATELY NOTIFY THE OWNER'S REPRESENTATIVE IF IT IS OBVIOUS THAT OBSTRUCTIONS OR STRUCTURES, IRRIGATION SYSTEM MALFUNCTION, EXISTING TREES OR PLANTS, GRADE DIFFERENCES OR CHANGES IN THE SITE PLAN ARE PRESENT THAT WILL IMPACT THE PLANTING DESIGN. FAILURE TO GIVE SUCH NOTIFICATION SHALL PLACE THE RESPONSIBILITY ON THE CONTRACTOR FOR ANY REVISIONS OR REPLACEMENTS NECESSARY FOR CORRECTION.
2. ANY EXISTING PLANTING SHOWN ON THE PLAN IS FOR REFERENCE ONLY. THE CONTRACTOR SHALL VERIFY THE EXISTING PLANTING AT THE SITE PRIOR TO STARTING WORK. UNLESS NOTED OTHERWISE, THE CONTRACTOR SHALL PROTECT THE EXISTING PLANTING ADJACENT TO THE WORK FROM DAMAGE OR DISTRESS.
3. ALL TREES AND SHRUBS SHALL BE OF CLASS A QUALITY WITHOUT PESTS, DISEASE OR DAMAGE, SHALL BE WELL ESTABLISHED IN THEIR CONTAINERS WITHOUT GIRDLING ROOTS OR EXCESSIVE TOP GROWTH, AND SHALL COMPLY WITH THE REQUIREMENTS OF THE "AMERICAN STANDARDS FOR NURSERY STOCK" (ANSI Z60.1).
4. NOTIFY THE LANDSCAPE ARCHITECT PRIOR TO THE INSTALLATION OF IRRIGATION COMPONENTS AND TREE AND/OR SHRUB PLANTING FOR APPROVAL OF THE PLANT LAYOUT AND PLANT QUALITY. PLANT LOCATIONS SHALL AVOID CONFLICTS WITH EXISTING IMPROVEMENTS, PLANTINGS OR UTILITIES, LIGHT POLES WHILE MEETING THE DESIGN INTENT. DO NOT PLANT TREES WITHIN 15 FEET OF LIGHT POLES UNLESS SPECIFICALLY AUTHORIZED. FAILURE TO OBTAIN SUCH APPROVAL SHALL PLACE THE RESPONSIBILITY ON THE CONTRACTOR FOR ANY RELOCATION OR REPLACEMENT OF IRRIGATION COMPONENTS, PLANTED TREES AND/OR SHRUBS.
5. PLANT QUANTITIES ARE PROVIDED FOR BIDDING CONVENIENCE ONLY. THE CONTRACTOR SHALL PROVIDE SUFFICIENT QUANTITIES OF PLANTS EQUAL TO THE SYMBOL COUNT OR TO FILL THE AREA SHOWN ON THE PLAN AT THE SPECIFIED TRIANGULAR SPACING.
6. ALL NEW TREES LOCATED WITHIN 5 FEET OF PAVEMENT OR STRUCTURES SHALL HAVE A ROOT CONTROL BARRIER INSTALLED WHEN PLANTED. UNLESS OTHERWISE SPECIFIED, INSTALL A 20 FOOT LONG X 24 INCH DEEP LINEAR POLYETHYLENE BARRIER VESPRO OR EQUAL AT THE EDGE OF PAVEMENT/STRUCTURE, CENTERED ON THE TREE TRUNK AS SHOWN IN THE PLANTING DETAILS.
7. REMOVE NURSERY STAKES FROM TREES AFTER TREE STAKING OR GUYING AS SHOWN IN THE DETAILS.
8. THE CONTRACTOR SHALL PRUNE NEW TREES ONLY WHEN SPECIFICALLY DIRECTED BY THE LANDSCAPE ARCHITECT. TREES HEADED BACK WITHOUT INTACT SCAFFOLDING BRANCH STRUCTURE OR IN ROOT-BOUND CONTAINERS SHALL BE REJECTED.
9. SUBMIT REPRESENTATIVE SOIL SAMPLES OF NATIVE AND PROPOSED IMPORT, IF NEEDED, PLANTING TOPSOIL TO A SOIL LAB FOR HORTICULTURAL ANALYSES AND FERTILITY RECOMMENDATIONS. AMEND SOIL ACCORDING TO THE RECOMMENDATIONS OF THE SOILS REPORT AND LANDSCAPE ARCHITECT'S DIRECTION. SEE THE LANDSCAPE PLANTING SPECIFICATIONS FOR ADDITIONAL INSTRUCTIONS.
10. PROVIDE SANDY LOAM TOPSOIL PER SPECIFICATION IN ALL RAISED PLANTERS AND WHERE IMPORT TOPSOIL IS REQUIRED. NATIVE SITE SOIL MAY BE USED IN RAISED PLANTERS ONLY WHEN THE NATIVE SITE SOIL MEETS THE CRITERIA FOR SANDY LOAM TOPSOIL AS DETERMINED BY A SOIL ANALYSIS.
11. PRIOR TO SOIL CONDITIONING, RIP IN TWO DIFFERENT DIRECTIONS WITH TINES AT 12 INCH SPACING, ALL TURFGRASS AREAS TO A 12 INCH DEPTH, AND SHRUB/GROUND COVER AREAS TO A 18 INCH DEPTH. ROUGH GRADE AND TILL THE APPROVED SOIL CONDITIONERS AND FERTILIZERS INTO THE TOP 6 INCHES PER THE LANDSCAPE PLANTING SPECIFICATIONS. COMPOST RATE SHALL BE A MINIMUM OF SIX (6) CUBIC YARDS PER 1,000 SQUARE FEET.
12. UPON THE COMPLETION OF THE SOIL CONDITIONING, REMOVE ROCKS AND CLODS 1 INCH DIAMETER AND GREATER FROM THE TOP TWO INCHES OF TOPSOIL, AND ALL DEBRIS. FINISH GRADE THE AREA TO +/- 0.05 FOOT TOLERANCE. RELATIVE DENSITY OF THE TOPSOIL SHALL NOT EXCEED 85% COMPACTION.
13. OBTAIN THE APPROVAL OF THE OWNER'S REPRESENTATIVE TO BEGIN PLANTING OPERATIONS ONCE THE IRRIGATION SYSTEM IS OPERATIONAL AND THE SOIL CONDITIONING AND FINISH GRADING IS COMPLETED.
14. CONTRACTOR SHALL MAINTAIN THE NEW PLANTING FOR HEALTHY AND VIGOROUS GROWTH, WHICH INCLUDES BUT IS NOT LIMITED TO WATERING, WEEDING, FERTILIZING, MOWING AND EDGING (AT LEAST ONCE A WEEK), REMOVING TRASH AND DEBRIS, AND OTHER RELATED ACTIVITIES THROUGHOUT THE DURATION OF THE MAINTENANCE PERIOD UNTIL FINAL ACCEPTANCE.
15. AFTER PLANTING IS COMPLETED AND PRIOR TO MULCH INSTALLATION, APPLY A BROAD SPECTRUM PRE-EMERGENT HERBICIDE TO ALL NON-TURFGRASS PLANTING AREAS PER THE MANUFACTURER'S SPECIFICATIONS.

TREE SIZE AND QUALITY STANDARDS

AMERICAN STANDARDS FOR NURSERY STOCK (ANSI Z60.1) AND GUIDELINE SPECIFICATIONS FOR NURSERY TREE QUALITY (URBAN TREE FOUNDATIONS) SHALL APPLY

	TYPES 1 & 2 SHADE TREES			TYPE 3 SMALL UPRIGHT TREES**			TYPE 4 SMALL SPREADING TREES***		
CONTAINER SIZE	MIN. CALIPER	MAX. CALIPER	TYPE 1 MIN./MAX. HEIGHT*	MIN. CALIPER	MAX. CALIPER	MIN./MAX. HEIGHT	MIN. CALIPER	MAX. CALIPER	MIN./MAX. HEIGHT
15 GALLON	0.75	2.0	7-10 FT	0.75	2.0	6-8 FT	0.75	2.0	4-8 FT
24" BOX	1.25	3.0	8-12 FT	1.25	3.0	8-10 FT	1.25	3.0	6-10 FT
36" BOX	1.75	3.5	10-16 FT	1.75	3.5	10-14 FT	1.75	3.5	7-12 FT
42" BOX	2.0	4.0	12-20 FT	2.0	4.0	12-18 FT	2.0	4.0	8-14 FT
48" BOX	2.5	5.0	14-26 FT	2.5	5.0	14-22 FT	2.5	5.0	9-16 FT

* TYPE 2 TREE HEIGHTS SHALL NOT BE LESS THAN TWO-THIRDS THE LISTED HEIGHT RANGE.

** TYPE 3 TREES SHALL HAVE A MINIMUM OF SEVEN BRANCHES.

*** TYPE 4 TREES SHALL HAVE A MINIMUM OF EIGHT BRANCHES.

CALIPER MEASUREMENT FOR CLUMP OR MULTI-STEM TREES IS ONE-HALF THE SUM OF THE THREE LARGEST TRUNK CALIPERS.

CALIPER MEASUREMENT FOR <4" TRUNK IS +6" ABOVE ROOTBALL (NOT INCLUDING ROOTSTOCK). >4" TRUNK IS +12".

TREES SHALL HAVE A CENTRAL LEADER. NEW LEADERS LESS THAN HALF THE DIAMETER OF A HEADED LEADER, BROKEN OR CO-DOMINATE LEADERS ARE NOT ACCEPTABLE.

SCAFFOLD BRANCHES SHALL BE LESS THAN 2/3 THE DIAMETER OF THE TRUNK, WITHOUT INCLUDED BARK AT ATTACHMENT. SCAFFOLD BRANCHES SHALL BE BALANCED, WELL SPACED VERTICALLY, AND WITH A RADIALLY BLANK SECTOR NO GREATER THAN 1/3 OF THE CANOPY CIRCUMFERENCE.

TEMPORARY BRANCHES ON THE LOWER TRUNK SHALL BE LESS THAN 3/8 INCH DIAMETER; AND THE CLEAR TRUNK HEIGHT SHALL BE NO MORE THAN 40% OF THE TOTAL TREE HEIGHT.

THE ROOT COLLAR AND ROOTBALL SHALL BE FREE OF DEFECTS INCLUDING CIRCLING, KINKED AND GIRDLING ROOTS. ROOTS THE EDGE AND BOTTOM OF THE CONTAINER SHALL BE LESS THAN 1/4 INCH DIAMETER, AND UNIFORM THROUGHOUT THE CONTAINER.

TREE CANOPY WIDTH SHALL BE A MINIMUM OF 25% OF THE STANDARD FORM TREE HEIGHT.

DO NOT HEAD BACK OR PRUNE TREES UNLESS APPROVED AND/OR DIRECTED TO BY THE LANDSCAPE ARCHITECT.

SEE SHEET L2.0a FOR PLANTING PLANS

PLANS PREPARED BY:
Blair, Church & Flynn
CONSULTING ENGINEERS
451 Clovis Avenue, Suite 200
Clovis, California 93612
Tel (559) 326-1400
Fax (559) 326-1500

LICENSED LANDSCAPE ARCHITECT — DAVID W. BRILEY — Signature — 12/31/20 Renewal Date — 07/14/2020 Date — STATE OF CALIFORNIA

NO.	REVISIONS	DATE	SAP WO	SUPV	APPROVED	ENGR	CK'D	MADE	P.E.
1	ADDENDUM #1	03-19-2021				PN	PN	JR	PN
2	ENVIRONMENTAL HEALTH PLAN CHECK REVISIONS	06-18-2021				PN	PN	JR	PN
3	ADDENDUM #2	12-03-2021				PN	PN	JR	PN
4	ADDENDUM #3	02-18-2022				PN	PN	JR	PN

REFERENCE DRAWINGS | REFERENCE DRAWINGS

LOCATION: BISHOP, CALIFORNIA

BISHOP SERVICE CENTER
SITE DEVELOPEMENT
PLANTING DETAILS

VOLUME 1

SOUTHERN CALIFORNIA EDISON — An EDISON INTERNATIONAL Company

SHEET NO. L3.0a
SCALE: AS NOTED
49 OF 66 SHTS.

100% CONSTRUCTION DOCUMENTS (12-03-2021)

ABBREVIATIONS

&	AND
@	AT
AFF	ABOVE FINISHED FLOOR
A OR AMP	AMPERES
AIC	AMPERE INTERRUPTING CAPACITY
AL, ALUM	ALUMINUM
APPROX	APPROXIMATE
AUX	AUXILIARY
AWG	AMERICAN WIRE GAGE
BAS	BUILDING AUTOMATION SYSTEM
BC	BARE COPPER
BDF	BUILDING DISTRIBUTION FRAME
BKR	BREAKER
BLDG	BUILDING
BLTS	BUILDING LIGHTS
C	CONDUIT
CAM	CAMERA
CB	CIRCUIT BREAKER
CKT	CIRCUIT
CLG	CEILING
CLR	CLEARANCE
CMS	COMBINATION MOTOR STARTER
C.O.	CONDUIT ONLY W/PULLROPE
CPT	CONTROL POWER TRANSFORMER
CT	CURRENT TRANSFORMER
CTRL	CONTROL
D	DEDICATED
DP	DISTRIBUTION PANEL
DN	DOWN
EA	EACH
EF	EXHAUST FAN
EHH	ELECTRIC HANDHOLE
ELEC	ELECTRICAL
EM	EMERGENCY; ON EMERGENCY POWER SUPPLY/PANEL
EMH	ELECTRIC MANHOLE
EMS	ENERGY MANAGEMENT SYSTEM
EMT	ELECTRICAL METALLIC TUBING
EQUIP	EQUIPMENT
<E>	EXISTING
<ERR>	EXISTING TO REMAIN AND RECONNECTED
EST	ESTIMATED
EV	ELECTRIC VEHICLE
EX	EXAMPLE
EYE	EYEWASH STATION
<F>	FUTURE
FA	FORCE AIR
FCLTS	FUEL CANOPY LIGHTS
FDR	FEEDER
FIC	FUEL ISLAND CONTROL
FLA	FULL LOAD AMPS
FLC	FULL LOAD CURRENT
FT, '	FEET
GFI	GROUND FAULT CIRCUIT-INTERRUPTER
GND	GROUND
GS	GROUND SENSOR CURRENT TRANSFORMER
HOA	HAND-OFF-AUTO
HCLTS	HAZ-MAT CANOPY LIGHTS
HP	HORSEPOWER
HT	HEIGHT
HV	HIGH VOLTAGE
HZ	HERTZ
", IN	INCHES
INS	INSULATION
IRR	IRRIGATION
ITSS	INFORMATION TECHNOLOGY SUPPORT SERVICE
JB, J	JUNCTION BOX
Kcmil	THOUSAND CIRCULAR MILS
KV	KILOVOLT
KVA	KILOVOLT AMPERE
KW	KILOWATT
L	LENGTH
LCM	LOCAL CONTROL MODULE
LF	LINEAR FEET
LPB	LIGHTING PULLBOX
LTG	LIGHTING
LTS	PERIMETER LIGHTS
LV	LOW VOLTAGE
MAX	MAXIMUM
MCP	MOTOR CIRCUIT PROTECTOR
MDF	MAIN DISTRIBUTION FRAME
MEZZ	MEZZANINE
MFG	MANUFACTURERS
MIN	MINIMUM
MSB	MAIN SWITCHBOARD
MTS	MANUAL TRANSFER SWITCH
MV	MEDIUM VOLTAGE
<N>	**NEW (BOLD)**
NEC	NATIONAL ELECTRIC CODE
NEMA	NATIONAL ELECTRIC MANUFACTURERS ASSOCIATION
NIC	NOT IN CONTRACT
NO	NUMBER
N.T.S.	NOT TO SCALE
NC	NORMALLY CLOSED
NO	NORMALLY OPEN
OC	ON CENTER
OHE	OVERHEAD ELECTRIC
P	POWER
P#	LIGHT POLE NUMBER
PB	PULLBOX
PPB	POWER PULLBOX
PF	POWER FACTOR
PH OR ø	PHASE
PLTS	PARKING LOT LIGHTS
PNL	PANEL
PNLA	PANEL 'A' FEEDER
PPMH	PRIMARY POWER MANHOLE/ PULLBOX OR VAULT
PRI	PRIMARY
PT	POTENTIAL TRANSFORMER
PV	PHOTOVOLTAIC
PWR	POWER
<R>	REMOVE
<RRN>	REMOVE & REPLACE W/ <N>
REC	RECEPTACLE
REF	REFERENCE
R/S	REMOVE AND SALVAGE OFF SITE
RM	ROOM
RMC	RIGID METALLIC CONDUIT
RSC	RIGID STEEL CONDUIT
RGS	RIGID GALVANIZED STEEL
S	SIGNAL
SA	SURGE ARRESTER
S.A.D.	SEE ARCHITECTURAL DRAWINGS
SCE	SOUTHERN CALIFORNIA EDISON
S.E.D.	SEE ELECTRICAL DRAWINGS
S.F.D.	SEE FIRE ALARM DRAWINGS
SEC	SECONDARY
SF	SQUARE FEET
SH, SHT	SHEET
SLTS	SITE LIGHTS
SPEC	SPECIFICATIONS
SPB	SIGNAL PULLBOX
SQ	SQUARE
S.S.D.	SEE STRUCTURAL DRAWINGS
STD	STANDARD
SVC	ELECTRIC SERVICE
SW	SWITCH
SWBD	SWITCHBOARD
SWGR OR SWG	SWITCHGEAR
SSW	MV SELECTOR SWITCH
TCLTS	TRUCK CANOPY LIGHTS
TEL	TELEPHONE
TR	TO REMAIN
TRLTS	TRASH ENCLOSURE LIGHTS
TYP	TYPICAL
TX, XFMR	TRANSFORMER
UG	UNDERGROUND
UON	UNLESS OTHERWISE NOTED
V	VOLT
VA	VOLT-AMPERE
VFD	VARIABLE FREQUENCY DRIVE
W	WATT
WP	WEATHERPROOF

SYMBOLS

SYMBOL	DESCRIPTION
	FUSE
	TRANSFORMER
	GROUND CONNECTION
	DRAWOUT OR PLUG-IN CONNECTION
	CIRCUIT BREAKER
LSIG	MOLDED CASE BREAKER W/ SOLID STATE TRIP UNIT (LONG, SHORT, INSTANTANEOUS, GROUND)
	LOAD INTERRUPTER SWITCH/FUSE (CURRENT LIMITING FUSE)
M	PG&E METER W/ CT'S
M	CUSTOMER OWNED METER W/ CT'S
	CURRENT TRANSFORMER, RATIO & QTY AS SHOWN
	DISCONNECT SWITCH
	CONDUIT OR CABLE AS NOTED
	UNDERGROUND ELECTRICAL (OR OTHER UTILITY)
E	<E> ELECTRICAL
21KV	UNDERGROUND 21KV CONDUIT
T	UNDERGROUND TELECOM CONDUIT
LV	CONTROLS OR LOW VOLTAGE CONDUIT
OHE	OVERHEAD ELECTRICAL CABLE – MEDIUM VOLTAGE
	BRANCH CIRCUIT HOME RUN TO PANEL. CONCEALED IN CEILING SPACE OR WHERE POSSIBLE.
	SURFACE RACEWAY.
#, #	REFERENCE SHEET NOTE.
1 / E4.01	DETAIL TAG. REFER TO DETAIL 1 ON SHEET E4.01.
	TO BE DEMOLISHED
	TRANSFORMER
PM	POWER MONITORING SYSTEM WITH CONNECTION
	FUSED DISCONNECT, HEAVY DUTY
	DISCONNECT, HEAVY DUTY
	COMBINATION MOTOR STARTER/DISCONNECT WITH HOA & INDICATOR LIGHTS
M	MOTOR
	FLEX CONNECTION
	CONTACT/STARTER
G	GROUNDING WELL, CHRISTY G5T WITH METALLIC INSPECTION COVER, UON (WITH ROD ELECTRODE: 3/4"x10' COPPER CLAD STEEL UON)
J	JUNCTION BOX – CEILING MOUNT
J	JUNCTION BOX – WALL MOUNT
PC	PHOTOCELL
T	THERMOSTAT
	CONDUIT OPENING
	EMPTY CONDUIT
P / 17	EQUIPMENT TAG
	POINT OF CONNECTION <N> TO <E>
	POINT OF DEMOLITION TO <E>
VFD	VARIABLE FREQUENCY DRIVE, FURNISH BY MECHANICAL CONTRACTOR INSTALLED & CONNECTED BY ELECTRICAL CONTRACTOR
K	KIRK KEY INTERLOCK
E	ELECTRICALLY INTERCONNECTION LOCK
	GROUNDING ROD ELECTRODE (3/4" x 10' COPPER CLAD UON)
	GROUND, CEILING, WALL-MOUNTED DUPLEX RECEPTACLE 20A, 125V, 3WG, NEMA 5-20R
USB	DUPLEX RECEPTACLE WITH BUILT-IN USB PORT
HP	HORSEPOWER
	NEW TRENCH
50/51N	INSTANTANEOUS/ OVERCURRENT/ TIME OVER CURRENT RELAY(S) AND CURRENT TRANSFORMERS
	COPPER GROUND BAR
52	MEDIUM VOLTAGE DRAWOUT CIRCUIT BREAKER
	ELECTRICAL POLE
	DATA OUTLET – (2) DATA PORTS, UON.
(#)	VOICE OUTLET – "#" DENOTES QUANTITY OF PORTS
TV	TV OUTLET – (1)COAX CABLE CONNECTION
(#,#)	FLOOR MOUNTED VOICE & DATA OUTLET – FIRST "#" DENOTES QUANTITY OF VOICE PORTS. SECOND "#" DENOTES QUANTITY OF DATA PORTS.
	WIRELESS ACCESS POINT (CEILING MOUNTED)
	WIRELESS ACCESS POINT (WALL MOUNTED)
	ELECTRICAL PANEL BOARD
PBX	PULLBOX
WP, R	RMS & STROBE
DS	DOOR SENSOR (INTRUSION DETECTION). PROVIDE WIRING, CONDUIT PATH AND JUNCTION BOX ONLY.
MS	MOTION DETECTOR (INTRUSION DETECTION). PROVIDE WIRING, CONDUIT PATH AND JUNCTION BOX ONLY.
CL	PRIMEX CLOCK, WIRELESS COMMUNICATION. PROVIDE WIRED POWER.
CR	CARD READER LOCATION INTERGRAL W/ LOCKSET (ACCESS CONTROL). PROVIDE CONDUIT, WIRING, AND ALL EQUIPMENT NECESSARY.
MG	MOTORIZED GATE OPERATOR
H	SECURITY SOUNDER (INTRUSION DETECTION). PROVIDE CONDUIT PATH AND JUNCTION BOX.
K	KEYPAD (INTRUSION DETECTION). PROVIDE CONDUIT PATH AND JUNCTION BOX.
I	INTERCOM (ACCESS CONTROL). PROVIDE CONDUIT, WIRING, AND ALL EQUIPMENT NECESSARY.
S	SLIDING GATE SENSOR
OS	OCCUPANCY SENSOR
	CAMERA LOCATION (SURVEILLANCE SYSTEM). PROVIDE CONDUIT, WIRING, AND ALL EQUIPMENT NECESSARY.
$	HALF-SWITCHED CONTROLLED RECEPTACLE. SWITCH PLATE TO BE PROVIDED WITH GFI COMBINATION
GFI	WALL-MOUNTED RECEPTACLE-ABOVE COUNTER, TYP, +44"AFF
GFI	GFI RECEPTACLE
D	DEDICATED RECEPTACLE
WP GFI	DUPLEX GFI, WEATHER RESISTANT RECEPTACLE WITH WHILE-IN-USE WEATHERPROOF METALLIC COVER, 20A, 125V, 3WG, NEMA 5-20R
C	CONTROLLED RECEPTACLE, REFER TO WIRING DIAGRAM
	DOUBLE DUPLEX RECEPTACLE
$	SINGLE POLE SWITCH, +44" AFF., DIMMER UON.
$ a	SWITCH – LOWER CASE LETTER INDICATES CIRCUIT SWITCHING
$ 3	SWITCH – THREE WAY SWITCH
$ T	SWITCH – TIMER OPERATED
$ HP	SWITCH – HORSE POWER RATED
SPK 2	SPEAKER AND MICROPHONE AUDIO MONITORING SYSTEM. PROVIDE CONDUIT, WIRING, AND ALL EQUIPMENT NECESSARY.

APPLICABLE CODES

UNLESS OTHERWISE INDICATED OR SPECIFIED, PERFORM THE WORK IN CONFORMANCE WITH THE LATEST EDITIONS OF ALL APPLICABLE REGULATORY REQUIREMENTS, INCLUDING, BUT NOT LIMITED TO, THE FOLLOWING:

1. CALIFORNIA BUILDING STANDARDS ADMINISTRATIVE CODE (PART 1, TITLE 24): 2019
2. CALIFORNIA BUILDING CODE (PART 2, TITLE 24): 2018 IBC WITH 2019 CA AMENDMENTS
3. CALIFORNIA ELECTRICAL CODE (PART 3, TITLE 24): 2017 NEC WITH 2019 CA AMENDMENTS
4. CALIFORNIA MECHANICAL CODE (PART 4, TITLE 24): 2018 UMC WITH 2019 CA AMENDMENTS
5. CALIFORNIA PLUMBING CODE (PART 5, TITLE 24) 2018 UPC WITH 2019 CA AMENDMENTS
6. CALIFORNIA ENERGY CODE (PART 6, TITLE 24): 2019
7. CALIFORNIA HISTORICAL BUILDING CODE, (PART 8, TITLE 24): 2019
8. CALIFORNIA FIRE CODE (PART 9, TITLE 24): 2018 IFC WITH 2019 CA AMENDMENTS
9. CALIFORNIA EXISTING BUILDING CODE (PART 10, TITLE 24): 2019 (2018 INTERNATIONAL EXISTING BUILDING CODE WITH 2019 CA AMENDMENTS)
10. CALIFORNIA GREEN BUILDING STANDARDS CODE OR CAL GREEN (PART 11, TITLE 24): 2019
11. CALIFORNIA REFERENCED STANDARDS CODE (PART 12, TITLE 24): 2019
12. PUBLIC SAFETY (CCR TITLE 19), STATE FIRE MARSHAL: CURRENT REVISION
13. NFPA 72, NATIONAL FIRE ALARM CODE, 2019 EDITION

SUMMARY OF WORK

PROVIDE AND INSTALL POWER, LIGHTING, AND DATA AT NEW SERVICE CENTER. SEE BELOW FOR A MORE DETAILED SCOPE:

POWER:

1. PROVIDE 1000 AMP, 480V, 3-PHASE POWER TO ADMIN. BUILDING.
2. PROVIDE 800 AMP, 480V, 3-PHASE POWER TO GARAGE BUILDING.
3. PROVIDE POWER FOR CAMERA POLES.

LIGHTING:

1. PROVIDE SITE LIGHTING.
2. PROVIDE CONTROLS.

LOW VOLTAGE:

1. PROVIDE BACKBONE CABLING: FIBER AND COPPER BACKBONE INFRASTRUCTURE CABLING TO NEW BUILDINGS. COORDINATE WITH SERVICE PROVIDER.
2. PROVIDE BACKBONE CONDUITS FOR CAMERA POLES.

DRAWING INDEX

SHT. NO.	DESCRIPTION
E0.1a	ELECTRICAL SYMBOLS & ABBREVIATIONS
E0.2a	ELECTRICAL GENERAL NOTES
E0.3a	ELECTRICAL TITLE 24
E0.4a	ELECTRICAL TITLE 24
E1.0a	ELECTRICAL OVERALL SITE PLAN
E1.1a	ELECTRICAL PARTIAL SITE PLAN
E1.2a	ELECTRICAL PARTIAL SITE PLAN
E1.3a	ELECTRICAL PARTIAL SITE PLAN
E2.0a	ELECTRICAL PHOTOMETRIC SITE PLAN
E5.1a	ELECTRICAL DETAILS
E5.2a	ELECTRICAL DETAILS
E5.3a	ELECTRICAL DETAILS
E5.4a	ELECTRICAL DETAILS
E5.5a	ELECTRICAL DETAILS
E6.1a	ELECTRICAL LOAD CALCULATIONS
E6.2a	ELECTRICAL VOLTAGE DROP & FEEDER SCHEDULE
E7.1a	ELECTRICAL SINGLE LINE DIAGRAM

SALASO'BRIEN
|expect a difference|
305 South 11th Street
San Jose, California 95112-2218
408.282.1500 | 408.297.2995 (f)
salasobrien.com

REGISTERED PROFESSIONAL ENGINEER JEFFRY GOSAL No. E18084 ELECTRICAL STATE OF CALIFORNIA
02.26.2021
Date Signed:

PLANS PREPARED BY:
Blair, Church & Flynn
CONSULTING ENGINEERS
451 Clovis Avenue, Suite 200
Clovis, California 93612
Tel (559) 326-1400
Fax (559) 326-1500

NO.	REVISIONS	DATE
2	ADDENDUM 1	02-26-2021
	ADDENDUM A	11-18-2020

REFERENCE DRAWINGS | REFERENCE DRAWINGS | NO. | REVISIONS | DATE | SAP WO | SUPV | APPROVED | ENGR | CK'D | MADE | P.E.

LOCATION: BISHOP, CALIFORNIA

BISHOP SERVICE CENTER
SITE DEVELOPMENT
ELECTRICAL SYMBOLS & ABBREVIATIONS

VOLUME 1

SOUTHERN CALIFORNIA EDISON — An EDISON INTERNATIONAL Company

SHEET NO. E0.1a

SCALE: AS NOTED

100% CONSTRUCTION DOCUMENTS (02-26-2021)

SOBE #191223a

SOUTHERN CALIFORNIA EDISON
2012 – 5 SIZE

Drawing: K:\drawings\Blair Church & Flynn\191223 SCE Bishop Service Center\191223a Site Development\191223E0.1a.dwg; LAYOUT – BCF.ctb
Plot by: minh.ong Mar 05, 2021 – 11:27am

GENERAL NOTES

1. CONTRACTOR IS RESPONSIBLE TO OBTAIN A COMPLETE SET OF CONTRACT DOCUMENTS, ADDENDA, DRAWINGS, AND SPECIFICATIONS. PRIOR TO SUBMITTING PROPOSAL, CONTRACTOR SHALL EXAMINE ARCHITECTURAL, STRUCTURAL AND MECHANICAL CONSTRUCTION DRAWINGS AND SPECIFICATIONS AND SHALL HAVE VISITED THE CONSTRUCTION SITE. HE/SHE SHALL BE FAMILIAR WITH THE EXISTING CONDITIONS UNDER WHICH HE/SHE WILL HAVE TO OPERATE AND WHICH WILL IN ANY WAY AFFECT THE WORK UNDER THIS CONTRACT. NO SUBSEQUENT ALLOWANCE WILL BE MADE IN THIS CONNECTION IN BEHALF OF THE CONTRACTOR FOR ANY ERROR OR NEGLIGENCE ON HIS/HER PART. DETERMINE THE SEQUENCE OF CONSTRUCTION THROUGHOUT THE PROJECT, INCLUDING TEMPORARY FACILITIES AND CONNECTIONS REQUIRED FOR THE DURATION OF THE PROJECT.

2. ALL TEMPORARY CONNECTIONS SHALL BE CONSIDERED PART OF THIS CONTRACT AND NO EXTRA CHARGES WILL BE ALLOWED. THIS SHALL INCLUDE MINOR ITEMS OF MATERIAL OR EQUIPMENT NECESSARY TO MEET THE REQUIREMENTS AND INTENT OF THE PROJECT.

3. THE CONTRACTOR SHALL BE RESPONSIBLE FOR THE SAFETY OF PERSONS AND PROPERTY AND SHALL PROVIDE INSURANCE COVERAGE AS NECESSARY FOR LIABILITY, PERSONAL, AND PROPERTY DAMAGE, TO FULLY PROTECT THE OWNER, ARCHITECT, AND ENGINEER FROM ANY AND ALL CLAIMS RESULTING FROM THIS WORK.

4. THE CONTRACTOR SHALL PROVIDE TO THE ARCHITECT A CONSTRUCTION SCHEDULE OF ALL ELECTRICAL WORK. THE CONSTRUCTION SCHEDULE SHALL IDENTIFY ALL SIGNIFICANT MILESTONES WITH COMPLETION DATES.

5. THE CONTRACTOR SHALL MAINTAIN RECORD DRAWINGS AT THE PROJECT SITE INDICATING ALL MODIFICATIONS TO ELECTRICAL SYSTEMS. THE CONTRACTOR SHALL, AT THE CONCLUSION OF THE PROJECT, PROVIDE A SET OF REPRODUCIBLE (AUTOCAD), ACCURATE AND NEAT "AS-BUILT" DRAWINGS ACCEPTABLE TO THE ARCHITECT.

6. THESE DRAWINGS DO NOT REPRESENT THE EXACT LOCATIONS, SIZES OR EXTENT OF UTILITIES ON SITE. CONTRACTOR SHALL TAKE STANDARD PRECAUTIONS FOR WORK IN EXISTING FACILITIES.

7. EXISTING ELECTRICAL WIRING WHICH WILL NOT BE MADE OBSOLETE AND WHICH WILL BE DISTURBED DUE TO CONSTRUCTION CHANGES REQUIRED BY THIS CONTRACT SHALL BE RESTORED TO OPERATING CONDITION, AS REQUIRED AND/OR DIRECTED. WHERE REQUIRED, SHOWN AND/OR DIRECTED, OUTLETS AND CONDUIT RUNS SHALL BE RELOCATED. IN SOME CASES IT MAY BE NECESSARY TO EXTEND CONDUITS AND PULL IN NEW WIRING OR INSTALL JUNCTION BOXES AND SPLICE IN NEW WIRING OR REPLACE OLD WIRING WITH NEW.

8. CERTAIN REMODELING OF ELECTRICAL FACILITIES WILL BE REQUIRED IN THE EXISTING BUILDING. EXISTING CONDUIT RUNS ARE GENERALLY NOT SHOWN, ALTHOUGH A FULL ATTEMPT HAS BEEN MADE TO SHOW SOME EXISTING CONDITIONS, OF WHICH INFORMATION HAS BEEN TAKEN FROM EXISTING RECORD DRAWINGS AND/OR LIMITED FIELD INVESTIGATIONS. THE DRAWINGS SHOWING LOCATION OF EXISTING EQUIPMENT, OUTLETS, FIXTURES, ETC., ARE APPROXIMATE ONLY (CONTRACTOR TO FIELD VERIFY).

9. ALL ELECTRICAL MATERIALS AND EQUIPMENT SHALL BE NEW AND SHALL BE LISTED AND LABELED BY A NATIONALLY RECOGNIZED TESTING LABORATORY AND SHALL BE INSTALLED AS PER LISTING OR LABELING (IE. MAXIMUM FUSE SIZE MEANS FUSE PROTECTION IS REQUIRED).

10. ALL ELECTRICAL EQUIPMENT AND INSTALLATION SHALL COMPLY WITH THE FOLLOWING REQUIREMENTS:
    a. AMERICAN STANDARD ASSOCIATION (ASA)
    b. AMERICAN NATIONAL STANDARD INSTITUTE (ANSI)
    c. AMERICAN SOCIETY OF TESTING MATERIALS (ASTM)
    d. CALIFORNIA CODE OF REGULATIONS TITLE 24 (CCR)
    e. INSTITUTE OF ELECTRICAL AND ELECTRONIC ENGINEERS (IEEE)
    f. INSULATED POWER CABLE ENGINEERS ASSOCIATIONS (IPCEA)
    g. NATIONAL ELECTRICAL MANUFACTURERS ASSOCIATIONS (NEMA)
    h. NATIONAL FIRE PROTECTION AGENCY (NFPA)
    i. ALL LOCAL CODE HAVING JURISDICTION

11. CONTRACTOR SHALL SECURE AND PAY FOR ALL PERMITS, FEES, AND INCIDENTAL COSTS NECESSARY FOR EXECUTION AND COMPLETION OF ELECTRICAL WORK, INCLUDING ALL CHARGES BY STATE, COUNTY AND LOCAL GOVERNMENTAL AGENCIES. CONTRACTOR SHALL BE RESPONSIBLE FOR THE ELECTRICAL UTILITY SYSTEM SHUT-DOWNS AND START-UP. CONTRACTOR SHALL BE RESPONSIBLE FOR COORDINATION REQUIRED WITH OTHER AGENCIES AND UTILITY COMPANIES.

12. CONTRACTOR IS RESPONSIBLE FOR COORDINATING ALL CROSSINGS ON NEW UTILITIES WITH THAT OF EXISTING ON SITE AND IN ADJACENT PROPERTIES. NOTIFY THE ENGINEER IMMEDIATELY OF ANY DEVIATIONS OR DISCREPANCIES FROM THIS PLAN.

13. CONTRACTOR SHALL COORDINATE HIS/HER WORK WITH OTHER TRADE ON SITE. ANY COST TO PERFORM WORK TO ACCOMPLISH SAID COORDINATION WHICH DIFFERS FROM THE WORK AS SHOWN ON THE DRAWINGS SHALL BE INCURRED BY THE CONTRACTOR. ANY DISCREPANCIES, AMBIGUITIES OR CONFLICTS SHALL BE BROUGHT TO THE ATTENTION OF THE ARCHITECT DURING BID TIME FOR CLARIFICATIONS. ANY SUCH CONFLICTS NOT CLARIFIED PRIOR TO BID SHALL BE SUBJECT TO THE INTERPRETATION OF THE ARCHITECT/ENGINEER AT NO ADDITIONAL COST TO THE OWNER.

14. COORDINATE WITH OTHER TRADES AS TO THE EXACT LOCATION OF THEIR RESPECTIVE EQUIPMENT. PROVIDE POWER AND CONNECTION TO MOTORS AND EQUIPMENT REQUIRING ELECTRICAL CONNECTIONS AS INDICATED ON ELECTRICAL DRAWINGS AND DRAWINGS OF OTHER TRADES. CONTRACTOR SHALL REVIEW DRAWINGS OF OTHER TRADES FOR CONTROL DIAGRAMS, SIZE AND LOCATION OF EQUIPMENT. DISCONNECT SWITCHES, STARTERS, AND CONDUITS FOR CONTROL WIRING FOR MECHANICAL AND PLUMBING EQUIPMENT SHALL BE PROVIDED BY ELECTRICAL CONTRACTOR. CONTRACTOR SHALL BE RESPONSIBLE FOR OBTAINING MANUFACTURER'S SHOP DRAWINGS PRIOR TO ROUGHING IN ALL CONDUITS TO THIS EQUIPMENT.

15. BEFORE ROUGH-IN, VERIFY ALL MOUNTING HEIGHTS AND EXACT LOCATIONS FOR ALL EQUIPMENT, ELECTRICAL CONNECTIONS, STUB-UPS, RECEPTACLES, OUTLETS, CONDUIT RUNS, ETC. WITH ARCHITECT AND OWNER. PLACE DEVICES LOCATED ABOVE COUNTERS, SHELVING, ETC. AND IN BATHROOMS SO AS NOT TO CONFLICT WITH EDGES OF WAINSCOTING, COUNTER SPLASH, SHELVING, ETC. ARCHITECTURAL DRAWINGS SHALL GOVERN. REFER TO ARCHITECTURAL ELEVATIONS FOR EXACT LOCATIONS OF ELECTRICAL DEVICES

16. MOUNTING HEIGHTS OF ALL CONTROL DEVICES TO BE USED BY OCCUPANT OF THE ROOM OR AREA SHALL BE MOUNTED AT THE FOLLOWING HEIGHTS:
    RECEPTACLES OUTLETS : +18" (TO BOTTOM OF OUTLETS)
    TELEPHONE/TV/DATA OUTLETS : +18" (TO BOTTOM OF OUTLETS)
    LIGHT SWITCHES : +44" (TO HIGHEST OPERABLE PART)
    OUTLETS ABOVE COUNTER : +44" (TO HIGHEST OPERABLE PART)
    MOUNTING HEIGHTS OF ALL DEVICES AND EQUIPMENT ARE FROM FINISHED FLOOR TO LOCATION OF DEVICE AS NOTED. EQUIPMENT INSTALLED IN LOCATIONS NOT APPROVED BY THE ARCHITECT SHALL BE RELOCATED AS DIRECTED BY THE ARCHITECT AT NO ADDITIONAL COST TO THE OWNER.

17. COORDINATE ALL OUTLET BOX INSTALLATION WITH ARCHITECTURAL WALL FINISH SCHEDULES. SPACE BETWEEN FACEPLATE AND DEVICE BOX SHALL NOT EXCEED 1/8".

18. FOR RENOVATION WORK, THE CONTRACTOR SHALL CONCEAL ALL WORK WHERE POSSIBLE. ALL EXPOSED RACEWAY AND BOXES IN OCCUPIED AREAS OR ON EXTERIOR WALLS SHALL BE PAINTED TO MATCH ADJACENT FINISHES.

19. THE CONTRACTOR SHALL BE HELD FULLY RESPONSIBLE FOR THE PROPER RESTORATION OF ALL EXISTING SURFACES REQUIRING PATCHING, PLASTERING, PAINTING AND/OR OTHER REPAIR DUE TO THE INSTALLATION OF ELECTRICAL WORK UNDER THE TERMS OF THIS SPECIFICATION. CLOSE ALL OPENINGS, REPAIR ALL SURFACES, ETC., AS REQUIRED.

20. SEAL ALL CONDUIT PENETRATIONS THROUGH FIRE RATED WALLS AND CEILINGS. FURNISH AND INSTALL FIRE RATED BACKBOXES AS REQUIRED, MAINTAINING FIRE RATING OF CEILING OR WALLS WHERE RECESSED ELECTRIC EQUIPMENT SUCH AS LIGHT FIXTURES, SWITCHES, RECEPTACLES, PANEL, ETC. ARE INSTALLED IN RATED WALL OR CEILINGS. PENETRATIONS OF FIRE RATED WALLS, CEILINGS, OR FLOORS SHALL COMPLY WITH CBC CHAPTER 7 (714) REQUIREMENTS. CONDUIT PENETRATIONS THAT ARE NOT STUBBED-OUT INSIDE THE WALL SHALL MEET F AND T RATING. ALL FIRE PROOFING METHODS SHALL BE UL APPROVED.

21. ALL EXTERIOR EQUIPMENT SHALL BE NEMA 3R RATED. ALL WALL PENETRATIONS TO EXTERIOR WALLS SHALL BE SEALED WATER TIGHT.

22. PULLING TAPES: ALL RACEWAY WITHOUT CABLE OR WIRE SHALL BE INSTALLED WITH A MINIMUM 1100 LBS. STRENGTH TEST POLYESTER PULLING TAPE. PULLING TAPES SHALL BE DETECTABLE MULE-TAPE WITH SEQUENTIAL FOOTAGE MARKING.

23. RUN NO MORE THAN 3 CURRENT CARRYING CONDUCTORS IN ANY WIREWAY UNLESS DE-RATING IS APPROVED BY ENGINEER OR SHOWN ON DRAWINGS.

24. ALL BRANCH CIRCUIT CONDUCTORS SHALL BE COPPER, #10 AWG MINIMUM, RATED FOR 600V, THHN/THWN, 75 DEGREE CELSIUS. ALL CONDUCTORS SHALL BE STRANDED, SOFT DRAWN ANNEALED COPPER WIRE 98% CONDUCTIVITY, BEARING THE UL LABEL. SYSTEM VOLTAGE SHALL BE IDENTIFIED AS TO VOLTAGE AND PHASE CONNECTIONS BY MEANS OF COLOR IMPREGNATED INSULATION OR APPROVED COLORED MARKING TAPE.

25. WHERE MULTI-HOMERUNS ARE INDICATED ON DRAWINGS INDICATING THE SAME CIRCUIT NUMBER, PROVIDE A JUNCTION BOX ABOVE THE ACCESSIBLE CEILING AND ROUTE ONE SET OF WIRES TO THE CIRCUIT BREAKER.

26. REFER TO THE SINGLE LINE DIAGRAM FOR THE CONDUIT AND CONDUCTOR SIZES HOMERUN TO ELECTRICAL PANELS. CONDUIT RUNS MAY NOT BE SHOWN ON DRAWINGS, BUT ARE PART OF THIS CONTRACT.

27. ALL CONDUIT RUNS INCLUDING STRAIGHT FEEDER AND BRANCH CIRCUIT SHALL BE PROVIDED WITH SUFFICIENT PULL BOXES OR JUNCTION BOXES TO LIMIT THE MAXIMUM LENGTH OF ANY SINGLE CABLE PULL TO 100 FEET. PULL BOXES SHALL BE SIZED PER CODE OR AS INDICATED ON DRAWINGS. LOCATIONS SHALL BE DETERMINED IN THE FIELD OR AS INDICATED ON THE DRAWINGS.

28. FINAL CONNECTIONS TO ALL EQUIPMENT SHALL BE PER MANUFACTURER'S APPROVED WIRING DIAGRAMS, DETAILS, AND INSTRUCTIONS. IT SHALL BE THE CONTRACTOR'S RESPONSIBILITY TO PROVIDE MATERIAL AND EQUIPMENT COMPATIBLE WITH EQUIPMENT ACTUALLY SUPPLIED.

29. DO NOT COMBINE DIFFERENT SYSTEM VOLTAGES IN SAME CONDUIT (EG., 120/208V VS. 277/480V), UNLESS APPROVED BY ENGINEER OR SHOWN ON DRAWINGS.

30. ELECTRICAL SYSTEMS SHALL BE INSTALLED FOR FINAL INSPECTIONS. PROVIDE NEUTRAL TEST AND PROOF OF TORQUE DURING FINAL INSPECTION FOR ALL UNITS. FINAL TERMINATIONS OF CONDUCTORS TO ELECTRICAL EQUIPMENT AND DEVICES SHALL BE TORQUE WRENCH TIGHTENED TO THE MANUFACTURER'S RECOMMENDED SPECIFICATION, NO EXCEPTION.

31. CIRCUIT BREAKER TERMINALS IN SWITCHBOARDS AND LOAD CENTER SHALL BE UL LISTED AND APPROVED FOR USE WITH COPPER 75 DEGREE CELSIUS CONDUCTORS.

32. SIZES OF BREAKERS, SWITCHES, FUSES AND FEEDERS ARE BASED ON DESIGNED EQUIPMENT SIZES. THESE SIZES SHALL BE ADJUSTED TO SATISFY REQUIREMENTS OF ACTUAL INSTALLED OR SUBSTITUTE EQUIPMENT. UP SIZING OR DOWNSIZING OF FEEDERS SHALL BE PROVIDED WITHOUT ADDITIONAL COST TO THE OWNER.

33. AS REQUIRED ALL OVERSIZED FEEDERS THAT WERE ADJUSTED IN SIZE TO COMPENSATE FOR VOLTAGE DROP SHALL BE PROVIDED WITH ADAPTER LUGS OR SPLICE BOX. ADAPTER LUGS SHALL BE PROVIDED IF SIZE IS AVAILABLE. OTHERWISE PROVIDE CABLE SPLICES IN THE SPLICE BOX TO REDUCE CABLES TO THE MAXIMUM SIZE THAT THE BREAKER LUGS CAN ACCOMMODATE.

34. CONTRACTOR SHALL BE RESPONSIBLE FOR ALL SAW-CUTTING, TRENCHING, BACKFILLING, COMPACTION AND PATCHING OF CONCRETE AND ASPHALT AS REQUIRED TO COMPLETE WORK. USE EXTREME CAUTION WHEN TRENCHING NEAR EXISTING UNDERGROUND UTILITY LINES. CONTRACTOR SHALL PROVIDE ALL REQUIRED CUTTING, PATCHING, PAINTING, AND REPAIRS NECESSARY TO RESTORE DAMAGED SURFACES TO EQUAL OR BETTER THAN ORIGINAL CONDITIONS EXISTING AT THE START OF WORK.

35. ALL ELECTRICAL EQUIPMENT SHALL BE BRACED OR ANCHORED TO RESIST HORIZONTAL FORCE ACTING IN ANY DIRECTION IN ACCORDANCE WITH THE REQUIREMENTS OF THE LATEST EDITION OF ASCE.

36. RIGID GALVANIZED STEEL CONDUIT SHALL BE USED FOR ALL ABOVE GRADE EXTERIOR APPLICATIONS, ALL CONDUITS LARGER THAN 2" TRADE DIAMETER, AND ALL INDOOR CONDUITS BELOW EIGHT (8) FEET FROM FINISHED FLOOR.

37. ELECTRICAL METALLIC TUBING (EMT) IS ONLY ALLOWED IN INTERIOR LOCATION ABOVE EIGHT (8) FEET FROM FINISHED FLOOR AND WHEN ENTERING A PANEL FROM ABOVE.

38. CONNECTIONS TO VIBRATING EQUIPMENT (MOTOR, TRANSFORMER ENCLOSURE, ETC.) AND SEISMIC SEPARATIONS SHALL BE PROVIDED WITH LIQUID-TIGHT FLEXIBLE STEEL CONDUIT WITH WATERTIGHT CONNECTORS. MAXIMUM LENGTH OF CONDUIT SHALL BE SIX FEET, UNLESS OTHERWISE NOTED.

39. POLYVINYL CHLORIDE (PVC) SCHEDULE 40 MAY BE INSTALLED BENEATH SLAB AND UNDERGROUND INSTALLATION. INSTALL PVC COATED RIGID STEEL CONDUIT FOR TRANSITION FROM UNDERGROUND TO ABOVE GRADE INSTALLATION.

40. CONTRACTOR SHALL PROVIDE TERMINATIONS FOR ALL DATA/VOICE CABLES INDICATED AT OUTLET LOCATIONS INDICATED ON DRAWINGS.

41. CONTRACTOR SHALL PROVIDE AND INSTALL ACCESS PANELS IN NON-ACCESSIBLE CEILINGS WHERE REQUIRED TO ACCESS ELECTRICAL EQUIPMENT IN CEILING SPACE. ACCESS DOORS SHALL HAVE FIRE RATING EQUAL TO THE CEILING ASSEMBLY IN WHICH THEY ARE INSTALLED.

42. ALL FIRE LIFE SAFETY EQUIPMENT, SUCH AS FIRE ALARM CONTROL PANEL AND REMOTE POWER SUPPLIES SHALL BE PROVIDED WITH DEDICATED CIRCUITS. IDENTIFY CIRCUIT DESIGNATION AND PROVIDE PERMANENT LABELING, "FIRE ALARM CIRCUIT" ON ELECTRICAL PANEL. PROVIDE LOCKABLE CIRCUIT BREAKER.

43. CONTROL CONDUIT FOR ENERGY/BUILDING MANAGEMENT SYSTEM (E/BMS) SHALL BE PROVIDED AND INSTALLED BY ELECTRICAL CONTRACTOR.

44. ROUTE CONDUIT PARALLEL AND PERPENDICULAR TO WALLS AND ADJACENT PIPING. ARRANGE CONDUIT TO MAINTAIN HEADROOM AND TO PRESENT A NEAT APPEARANCE.

45. WHEN A DISCREPANCY IN QUANTITY OR SIZE OF CONDUIT, WIRE, EQUIPMENT, CIRCUIT BREAKERS, ETC., ARISES ON THE DRAWINGS OR SPECIFICATIONS, CONTRACTOR SHALL BE RESPONSIBLE FOR PROVIDING AND INSTALLING ALL MATERIAL REQUIRED BY THE MOST STRINGENT CONDITIONS NOTED ON THE DRAWINGS OR IN THE SPECIFICATIONS TO PROVIDE A COMPLETE AND OPERABLE SYSTEM, OR AS DIRECTED BY ENGINEER.

46. FOR SMALL AC MOTORS NOT HAVING BUILT-IN THERMAL OVERLOAD PROTECTION, PROVIDE MANUAL MOTOR STARTERS WITH OVERLOAD HEATER ELEMENTS SIZED PER MANUFACTURER'S RECOMMENDATION. FOR SMALL AC MOTORS WITH BUILT-IN THERMAL OVERLOAD PROTECTION, PROVIDE A HORSEPOWER RATED TOGGLE DISCONNECT SWITCH.

47. DISCONNECT SAFETY SWITCHES SHALL BE HEAVY DUTY AND BE RATED FOR THE NUMBER OF POLES, VOLTAGE, CURRENT AND HORSEPOWER RATING AS REQUIRED. PROVIDE FUSE PROTECTION BASED ON THE MOTOR NAMEPLATE RATINGS.

48. PROVIDE PERMANENT IDENTIFICATION (NAMEPLATES) FOR ALL ELECTRICAL PANELS, SWITCHBOARDS, MOTOR CONTROL CENTERS, DISCONNECT SWITCHES, TRANSFORMERS, TERMINAL CABINETS, ETC.

49. ELECTRICAL CONTRACTOR IS RESPONSIBLE TO VERIFY TYPE OF CEILING SYSTEMS AND TO FURNISH APPROVED LIGHTING FIXTURES OF THE TYPE REQUIRED FOR MOUNTING IN SUBJECT CEILING. PROVIDE ALL NECESSARY MOUNTING KIT/HARDWARE TO PROVIDE A COMPLETE WORKING LIGHTING SYSTEM.

50. ALL FINAL ELECTRICAL CONNECTIONS TO OWNER FURNISHED EQUIPMENT SHALL BE MADE BY THE ELECTRICAL CONTRACTOR.

51. ALL SPLICES AND TERMINALS SHALL BE COMPRESSION TYPE, OF SEAMLESS PURE COPPER, TIN PLATED, LONG BARREL, INSPECTION WINDOW, TERMINALS WITH TWO-HOLE PAD (WITH NEMA DRILLING). CLEAN ALL SURFACES AND INSTALL WITH OXIDE INHIBITING COMPOUND BURNDY PENETROX-E OR EQUAL. APPLY COMPOUND BETWEEN BUS BAR AND LUG PAD AND BETWEEN CONDUCTOR AND LUG BARREL. INSTALL COMPRESSION CONNECTORS WITH A FULLY CIRCUMFERENTIAL COMPRESSION DIE BURNDY HYPRESS OR EQUAL.

52. LABEL ALL CONDUIT WHERE IT BEGINS, AND WHERE IT TERMINATES INTO A BOX, PANEL, DEVICE, LOAD, OR DISCONNECT. CONDUIT SHALL BE LABELED EVERY 30 FEET OR LESS. CONDUIT SHALL BE LABELED WHERE IT PENETRATES ANY WALL OR FLOOR. LABEL SHALL BE PERMANENT PRINTED LABELS (DESCRIBING SOURCE, CIRCUIT, AND LOAD) LEGIBLE FROM FLOOR WHERE POSSIBLE (STANDING POSITION).

53. CONTRACTOR'S FAILURE TO ORDER OR RELEASE ORDER FOR MATERIALS AND/OR EQUIPMENT WILL NOT BE ACCEPTED AS A REASON TO SUBSTITUTE ALTERNATE MATERIALS, EQUIPMENT OR INSTALLATION METHODS.

54. PROVIDE ARC-FLASH HAZARD WARNING LABELS ON ALL AFFECTED ELECTRICAL EQUIPMENT, INCLUDING SWITCHBOARDS, PANEL BOARDS, INDUSTRIAL CONTROL PANELS, METER SOCKET ENCLOSURES, AND MOTOR CONTROL CENTERS. MARKING SHALL BE LOCATED SO AS TO BE CLEARLY VISIBLE TO QUALIFIED PERSONS. LABEL SHALL BE FACTORY PRE-PRINTED OR MACHINE-PRINTED SELF-ADHESIVE VINYL MATERIAL; UV, CHEMICAL, WATER, HEAT AND ABRASION RESISTANT; PRODUCED USING MATERIALS RECOGNIZED BY UL 969. MINIMUM SIZE: 3.5 BY 5 INCHES.

55. UNLESS OTHERWISE NOTED, ARRANGE, PAY FOR, COORDINATE AND PROVIDE ALL PERMITS NECESSARY FOR A COMPLETE AND OPERABLE SYSTEM.

56. ALL WORK IS <N> UNLESS OTHERWISE NOTED.

NO.	REVISIONS	DATE	SAP WO	SUPV	APPROVED	ENGR	CK'D	MADE	P.E.
	ADDENDUM 1	02-26-2021							
	ADDENDUM A	11-18-2020							

REFERENCE DRAWINGS | REFERENCE DRAWINGS

SALAS O'BRIEN
|expect a difference|
305 South 11th Street
San Jose, California 95112-2218
408.282.1500 | 408.297.2995 (f)
salasobrien.com

REGISTERED PROFESSIONAL ENGINEER JEFFRY GOSAL No. E18084 ELECTRICAL STATE OF CALIFORNIA
02.26.2021
Date Signed:

PLANS PREPARED BY:
Blair, Church & Flynn
CONSULTING ENGINEERS
451 Clovis Avenue, Suite 200
Clovis, California 93612
Tel (559) 326-1400
Fax (559) 326-1500

LOCATION: BISHOP, CALIFORNIA

BISHOP SERVICE CENTER
SITE DEVELOPMENT
ELECTRICAL GENERAL NOTES

VOLUME 1

SOUTHERN CALIFORNIA EDISON — An EDISON INTERNATIONAL Company

SHEET NO. E0.2a

SCALE: AS NOTED

49 OF 64 SHTS.

100% CONSTRUCTION DOCUMENTS (02-26-2021)

SOBE #191223a

SOUTHERN CALIFORNIA EDISON
2012 – 5 SIZE

Drawing: K:\drawings\Blair Church & Flynn\191223 SCE Bishop Service Center\191223a Site Development\191223E0.2a.dwg; LAYOUT – BCF.ctb
Plot by: minh.ong Mar 05, 2021 – 11:27am

CERTIFICATE OF COMPLIANCE NRCC-ELC-E

This document is used to demonstrate compliance with mandatory requirements in §130.5 for electrical systems in newly constructed nonresidential, high-rise residential and hotel/motel occupancies. Additions and alterations to electrical service systems in these occupancies will also use this document to demonstrate compliance per §141.0(a) or §141.0(b)2P for alterations.

Project Name:	SCE Bishop Service Center Site Development	Report Page:	Page 1 of 5
Project Address:	4000 W. Line St., Bishop, CA 93514	Date Prepared:	02/26/21

A. GENERAL INFORMATION

01 Project Location (city)		Lake Isabella	02 Occupancy Types Within Project:		
☑ Office	☐ Retail	☐ Warehouse	☐ Hotel/ Motel	☐ School	☐ Support Areas
☐ Parking Garage	☐ High-Rise Residential	☐ Relocatable	☐ Healthcare Facilities	☑ Other (Write In):	Prefab/Car Garage

B. PROJECT SCOPE

Table Instructions: Include any electrical service systems that are within the scope of the permit application.

01	02	03	04	05	06
Electrical Service Designation/ Description	Scope of Work[1]	Rating (kVA)	Utility Provided Metering System Exception to §130.5(a)[2]	System subject to CA Elec Code Article 517 Exception to §130.5(a)&(b)	Demand Response Controls: Where required, demand response controls must be specified which are capable of receiving and automatically responding to at least one standards based messaging protocol which enables demand response after receiving a demand response signal. Sections §120.2, §130.1 and §130.3 and compliance documents NRCC-MCH, NRCC-LTI and NRCC-LTS will indicate when demand response controls are required.
SWBD MSB	New electrical service equipment & meter	1,527	☑	☐	

[1] FOOTNOTES: Adding only new feeders and branch circuits triggers Voltage Drop 130.5(c), no other requirements from 130.5 are required.
[2] Applicable if the utility company is providing a metering system that indicates instantaneous kW demand and kWh for a utility-defined period.

C. COMPLIANCE RESULTS

Table Instructions: If this table says "DOES NOT COMPLY" refer to Table D. for guidance and review the Table that indicates "No".

01		02		03		04	05
Service Electrical Metering §130.5(a)	AND	Separation for Monitoring §130.5(b)	AND	Voltage Drop §130.5(c)	AND	Controlled Receptacles §130.5(d)	**Compliance Results**
(See Table F)		(See Table G)		(See Table H)		(See Table I)	
	AND	Yes	AND	Yes	AND	Yes	**COMPLIES with Exceptional Conditions**

CERTIFICATE OF COMPLIANCE NRCC-ELC-E

Project Name:	SCE Bishop Service Center Site Development	Report Page:	Page 2 of 5
Project Address:	4000 W. Line St., Bishop, CA 93514	Date Prepared:	02/26/21

D. EXCEPTIONAL CONDITIONS

This table is auto-filled with uneditable comments because of selections made or data entered in tables throughout the form.

Table B indicates the project is exempt from §130.5(a) Service Electrical Metering requirements because the utility company has provided the project a metering system that indicates instantaneous kW demand and kWh for a utility-definied period.

E. ADDITIONAL REMARKS

This table includes remarks made by the permit applicant to the Authority Having Jurisdiction.

F. SERVICE ELECTRICAL METERING

This Section Does Not Apply

G. SEPARATION OF ELECTRICAL CIRCUITS FOR ENERGY MONITORING

Table Instructions: Complete this table for entirely new or complete replacement electrical power distribution systems to demonstrate compliance with §130.5(b). Using the dropdown choices in column 01, indicate the load types included for each service. Any load types that are not included in the service do not need to be shown.

Electrical Service Designation/Description: **SWBD MSB**

01	02	03	04	05	
Load Type per Table 130.5-B[1]	Minimum Required Separation of Load per Table 130.5-B	Compliance Method[2]	Location of Requirements in Construction Documents	Field Inspector	
				Pass	Fail
Lighting including exit, egress and exterior	All lighting disaggregated by floor, type or area	Method 1	E1.1a, E1.2a & E7.1a	☐	☐
HVAC systems and components	All HVAC in aggregate and each HVAC load rated at least 50 kVA	Method 1	E1.1a, E1.2a & E7.1a	☐	☐
Domestic and service water systems	All loads in aggregate	Method 1	E1.1a, E1.2a & E7.1a	☐	☐
Plug Loads and appliances < 25kVA	All plug load separated by floor, type or area All groups of plug loads exceeding 25 kVA connected load in an area less than 5000 sf	Method 1	E1.1a, E1.2a & E7.1a	☐	☐
Other non-HVAC loads or appliances ≥ 25kVA	All loads in aggregate	Method 1	E1.1a, E1.2a & E7.1a	☐	☐
Renewable power sources (net or total)	Each group	Method 3	E1.1a, E1.2a & E7.1a	☐	☐

Table Continued

CERTIFICATE OF COMPLIANCE NRCC-ELC-E

Project Name:	SCE Bishop Service Center Site Development	Report Page:	Page 3 of 5
Project Address:	4000 W. Line St., Bishop, CA 93514	Date Prepared:	02/26/21

01	02	03	04	05	
Load Type per Table 130.5-B[1]	Minimum Required Separation of Load per Table 130.5-B	Compliance Method[2]	Location of Requirements in Construction Documents	Field Inspector	
				Pass	Fail
Charging stations for electric vehicles	All loads in aggregate	Method 3	E1.1a, E1.2a & E7.1a	☐	☐

** NOTES: If "Other*" is selected under Compliance Method above, please indicate how compliance has been achieved in the space provided below.*

[1] FOOTNOTES: For each separate load type, up to 10% of the connected load may be of any type.
[2] Method 1: Switchboards/ motor control centers/ panelboard loads disaggregated for each load type
Method 2: Switchboards/ motor control centers/ panelboard supply other distribution equipment with loads disaggregated for each load type
Method 3: Branch circuits serve load types individually & provisions for adding future branch curcuit monitoring
Method 4: Complete metering system measures and reports loads by type
See Chapter 8 of the Nonresidential Compliance Manual for more detail on Compliance Methods.

H. VOLTAGE DROP

Table Instructions: Please complete this table for entirely new or complete replacement electrical power distribution systems, or alterations that add, modify or replace both feeders and branch circuits to demonstrate compliance with §130.5(c). For alterations, only the altered circuits must demonstrate compliance per §141.0(b)2Piii.

01	02		03	04	05	
Electrical Service Designation/ Description	Combined Voltage Drop on Installed Feeder/Branch Circuit Conductors Compliance Method		Location of Voltage Drop Calculations[1]	Sheet Number for Voltage Drop Calculations in Construction Documents	Field Inspector	
					Pass	Fail
SWBD MSB	☑ Voltage drop < 5%	☐ Permitted by CA Elec Code (Exception to §130.5(c))*	In construction documents	Drawing: E6.1a	☐	☐

**NOTES If "Permitted by CA Elec Code*" is selected under Compliance Method above, please indicate where the exception applies in the space provided below.*
[1] FOOTNOTES: Voltage drop calculations may be attached to the permit application outside the construction documents if allowed by the Authority Having Jurisdiction. Select "attached" if applicable. If calculations will be the responsibility of the installing contractor, select "Contractor Responsible".

I. CIRCUIT CONTROLS FOR 120-VOLT RECEPTACLES AND CONTROLLED RECEPTACLES

Table Instructions: Please complete this table for entirely new or complete replacement electrical power distribution systems to demonstrate compliance with §130.5(d). Both controlled and uncontrolled receptacles must be provided in office areas, lobbies, conference rooms, kitchen areas in office spaces, copy rooms and hotel/motel guest rooms.

Table Continued

CERTIFICATE OF COMPLIANCE NRCC-ELC-E

Project Name:	SCE Bishop Service Center Site Development	Report Page:	Page 4 of 5
Project Address:	4000 W. Line St., Bishop, CA 93514	Date Prepared:	02/26/21

01	02	03	04	05	06	
Room Name or Description	Location/ Type of Controlled Receptacles	Shut-Off Controls	Permanent Durable Marking Will be Used	Location of Requirements in Construction Documents	Field Inspector	
					Pass	Fail
Controlled Receptacles in Offices	Within 6ft of uncontrolled receptacles	Occupancy Sensor	☑	Floor Plan	☐	☐
				Add Row	Remove Last	

** If "Other*" is selected under Compliance Method above, please indicate how compliance has been achieved in the space provided below.*

J. DECLARATION OF REQUIRED CERTIFICATES OF INSTALLATION

Table Instructions: Selections have been made based on information provided in previous tables of this document. If any selection needs to be changed, please explain why in Table E. Additional Remarks. These documents must be provided to the building inspector during construction and can be found online at https://ww2.energy.ca.gov/title24/2019standards/2019_compliance_documents/Nonresidential_Documents/NRCI/

YES	NO	Form/Title	Field Inspector	
			Pass	Fail
◉	○	NRCI-ELC-01-E - Must be submitted for all buildings.	☐	☐

K. DECLARATION OF REQUIRED CERTIFICATES OF ACCEPTANCE

There are no Certificates of Acceptance applicable to electrical power distribution requirements.

CERTIFICATE OF COMPLIANCE NRCC-ELC-E

Project Name:	SCE Bishop Service Center Site Development	Report Page:	Page 5 of 5
Project Address:	4000 W. Line St., Bishop, CA 93514	Date Prepared:	02/26/21

DOCUMENTATION AUTHOR'S DECLARATION STATEMENT

I certify that this Certificate of Compliance documentation is accurate and complete.

Documentation Author Name:	JEFFRY GOSAL	Documentation Author Signature:	[signature]
Company:	Salas O'Brien	Signature Date:	02/26/21
Address:	305 South 11th Street	CEA/ HERS Certification Identification (if applicable):	
City/State/Zip:	San Jose, California 95112	Phone:	408-282-1500

RESPONSIBLE PERSON'S DECLARATION STATEMENT

I certify the following under penalty of perjury, under the laws of the State of California:

1. **The information provided on this Certificate of Compliance is true and correct.**
2. **I am eligible under Division 3 of the Business and Professions Code to accept responsibility for the building design or system design identified on this Certificate of Compliance (responsible designer)**
3. **The energy features and performance specifications, materials, components, and manufactured devices for the building design or system design identified on this Certificate of Compliance conform to the requirements of Title 24, Part 1 and Part 6 of the California Code of Regulations.**
4. **The building design features or system design features identified on this Certificate of Compliance are consistent with the information provided on other applicable compliance documents, worksheets, calculations, plans and specifications submitted to the enforcement agency for approval with this building permit application.**
5. **I will ensure that a completed signed copy of this Certificate of Compliance shall be made available with the building permit(s) issued for the building, and made available to the enforcement agency for all applicable inspections. I understand that a completed signed copy of this Certificate of Compliance is required to be included with the documentation the builder provides to the building owner at occupancy.**

Responsible Designer Name:	JEFFRY GOSAL	Responsible Designer Signature:	[signature]
Company :	Salas O'Brien	Date Signed:	02/26/21
Address:	305 South 11th Street	License:	E18084
City/State/Zip:	San Jose, California 95112	Phone:	408-282-1500

NO.	REVISIONS	DATE
2	ADDENDUM 1	02-26-2021
	ADDENDUM A	11-18-2020

REFERENCE DRAWINGS | REFERENCE DRAWINGS | NO. | REVISIONS | DATE | SAP WO | SUPV | APPROVED | ENGR | CK'D | MADE | P.E.

SALAS O'BRIEN
|expect a difference|
305 South 11th Street
San Jose, California 95112-2218
408.282.1500 | 408.297.2995 (f)
salasobrien.com

REGISTERED PROFESSIONAL ENGINEER — JEFFRY GOSAL — No. E18084 — ELECTRICAL — STATE OF CALIFORNIA
02.26.2021 Date Signed:

PLANS PREPARED BY:
Blair, Church & Flynn
CONSULTING ENGINEERS
451 Clovis Avenue, Suite 200
Clovis, California 93612
Tel (559) 326-1400
Fax (559) 326-1500

LOCATION: BISHOP, CALIFORNIA

BISHOP SERVICE CENTER
SITE DEVELOPMENT
ELECTRICAL TITLE 24

VOLUME 1

SHEET NO. E0.3a (2)

SOUTHERN CALIFORNIA EDISON — An EDISON INTERNATIONAL Company

SCALE: AS NOTED

50 OF 64 SHTS.

100% CONSTRUCTION DOCUMENTS (02-26-2021)

SOBE #191223a

SOUTHERN CALIFORNIA EDISON
2012 – 5 SIZE

Drawing: K:\drawings\Blair Church & Flynn\191223 SCE Bishop Service Center\191223a Site Development\191223E0.3a.dwg; LAYOUT – BCF.ctb
Plot by: minh.ong Mar 05, 2021 – 11:27am

STATE OF CALIFORNIA

Outdoor Lighting

NRCC-LTO-E (Created 11/19) CALIFORNIA ENERGY COMMISSION

CERTIFICATE OF COMPLIANCE	NRCC-LTO-E
This document is used to demonstrate compliance with requirements in §110.9, §130.0, §130.2, §140.7, and §141.0(b)2L for outdoor lighting scopes using the prescriptive path.	
Project Name: SCE Bishop Service Center Site Development	Report Page: Page 1 of 6
Project Address: 4000 W. Line St., Bishop, CA 93514	Date Prepared: 02/26/21

A. GENERAL INFORMATION

01	Project Location (city)	Lake Isabella	04	Total Illuminated Hardscape Area (ft^2)	29,427
02	Climate Zone	16			
03	Outdoor Lighting Zone per Title 24, Part 1 §10-114 or as designated by Authority Having Jurisdiction (AHJ):				
☐ LZ-0: Very Low - Undeveloped Parkland		☑ LZ-2: Moderate - Rural Areas	☐ LZ-4: High - Must be reviewed by CA Energy Commission for Approval		
☐ LZ-1: Low - Developed Parkland		☐ LZ-3: Moderately High - Urban Areas			

B. PROJECT SCOPE

Table Instructions: Include any outdoor lighting systems that are within the scope of the permit application and are demonstrating compliance using the prescriptive path outlined in §140.7 or §141.0(b)2L for alterations.

My project consists of:

01	02	
☑ New Lighting System	Must Comply with Allowances from §140.7.	
☐ Altered Lighting System	Is your alteration increasing the connected lighting load (Watts)? ◯ Yes ◯ No	
03	04	05
% of Existing Luminaires Being Altered[1]	Sum Total of Luminaires Being Added or Altered	Calculation Method

[1] *FOOTNOTES: % of Existing Luminaires Being Altered = (Sum Total of Luminaires Being Added or Altered / Existing Luminaires within the Scope of the Permit Application) x 100*

C. COMPLIANCE RESULTS

Table Instructions: If any cell on this table says "DOES NOT COMPLY" or "COMPLIES with Exceptional Conditions" refer to Table D. for guidance.

Calculation of Total Allowed Lighting Power (Watts) §140.7 or §141.0(b)2L / **Compliance Results**

01		02		03		04		05		06		07		08	09
General Hardscape Allowance §140.7(d)1	+	Per Application §140.7(d)2	+	Sales Frontage §140.7(d)2	+	Ornamental §140.7(d)2	+	Per Specific Area §140.7(d)2	OR	Existing Power §141.0(b)2L	=	**Total Allowed** (Watts)	≥	**Total Actual** (Watts)	**07 Must be ≥ 08**
(See Table I)		(See Table J)		(See Table K)		(See Table L)		(See Table M)		(See Table N)				(See Table F)	
1,455.693	+		+		+		+		OR		=	1,455.693	≥	1,273.29	**COMPLIES**
Cutoff Compliance (See Table G for Details)												**Not Applicable**			
Controls Compliance (See Table H for Details)												**COMPLIES**			

STATE OF CALIFORNIA

Outdoor Lighting

NRCC-LTO-E (Created 11/19) CALIFORNIA ENERGY COMMISSI19

CERTIFICATE OF COMPLIANCE	NRCC-LTO-E
Project Name: SCE Bishop Service Center Site Development	Report Page: Page 2 of 6
Project Address: 4000 W. Line St., Bishop, CA 93514	Date Prepared: 02/26/21

D. EXCEPTIONAL CONDITIONS

This table is auto-filled with uneditable comments because of selections made or data entered in tables throughout the form.

No exceptional conditions apply to this project.

E. ADDITIONAL REMARKS

This table includes remarks made by the permit applicant to the Authority Having Jurisdiction.

F. OUTDOOR LIGHTING FIXTURE SCHEDULE

Table Instructions: For new or altered lighting systems demonstrating compliance with §140.7 (ie Table I has expanded for input), include all luminaires being installed and any existing luminaires remaining or being moved within the spaces covered by the permit application in the Table below. For altered lighting systems using the Existing Power method per §141.0(b)2L (ie Table N has expanded for input), include only new luminaires being installed and replacement luminaires being installed as part of the project scope (ie, do not include existing luminaires remaining or existing luminaires being moved).

Designed Wattage:

01	02		03	04	05	06	07	08	09	10	
Name or Item Tag	Complete Luminaire Description		Watts per luminaire[1,2]	How Wattage is determined	Total number luminaires[2]	Luminaire Status[3]	Excluded per §140.7(a)	Design Watts	Cutoff Req. ≥ 6,200 initial lumen output §130.2(b)[4]	Field Inspector Pass	Field Inspector Fail
Type A	SPECGRADELED ARIB-40	☐ Linear	40	Mfr. Spec[1]	9	New	☐	360		☐	☐
Type B	FEX L48 6000LM FGFL M	☐ Linear	39.51	Mfr. Spec[1]	9	New	☐	355.59		☐	☐
Type E2	2 x RSX1 P2 30K R4 MVC	☐ Linear	145.9	Mfr. Spec[1]	3	New	☐	437.7		☐	☐
Type H	SPECGRADELED DELA-20	☐ Linear	20	Mfr. Spec[1]	6	New	☐	120		☐	☐
Type J	4640 18LED WHT30K M	☐ Linear	19	Mfr. Spec[1]	2	New	☑			☐	☐
							Total Designed Watts:	**1,273.29**			

* NOTES: Selections with a * require a note in the space below explaining how compliance is achieved.
EX: Luminaire is lighting a statue; EXCEPTION 2 to §130.2(b).

STATE OF CALIFORNIA

Outdoor Lighting

NRCC-LTO-E (Created 11/19) CALIFORNIA ENERGY COMMISSI19

CERTIFICATE OF COMPLIANCE	NRCC-LTO-E
Project Name: SCE Bishop Service Center Site Development	Report Page: Page 3 of 6
Project Address: 4000 W. Line St., Bishop, CA 93514	Date Prepared: 02/26/21

[1] *FOOTNOTES: Authority Having Jurisdiction may ask for Luminaire cut sheets to confirm wattage used for compliance per §130.0(c)*
[2] *For linear luminaires, wattage should be indicated as W/lf instead of Watts/luminaire. Total linear feet for the luminaire should be indicated in column 05 instead of number of luminaires.*
[3] *Select "New" for new luminaires in a new outdoor lighting project or for added luminaires in an alteration. Select "Altered" for replacement luminaires in an alteration. Select "Existing to Remain" for existing luminaires within the project scope that are not being altered and are remaining. Select "Existing Reinstalled" for existing luminaires which are being removed and reinstalled as part of the project scope*
[4] *Compliance with mandatory cutoff requirements is required for luminaires with initial lumen output ≥ 6,200 unless exempted by §130.2(b).*

G. CUTOFF REQUIREMENTS (BUG)

This Section Does Not Apply

H. OUTDOOR LIGHTING CONTROLS

Table Instructions: Complete this table demonstrating compliance with controls requirements for all new or altered luminaires installed as part of the permit application. For alteration projects, luminaires which are existing to remain (ie untouched) and luminaires which are removed and reinstalled (wiring only) do not need to be included in this table even if they are within the spaces covered by the permit application.
*When an option having a * is selected, the notes section of this table must be completed. The lighting controls section of the Compliance Summary Table on the first page will show "DOES NOT COMPLY" if the notes are left blank. For each requirement in columns 02 through 04, do not leave the field blank, instead select NA or Exempt* from the dropdown list to indicate not applicable or an exemption.*

Mandatory Controls

01	02	03	04	05	
Area Description	Shut-Off §130.2(c)1	Auto-Schedule §130.2(c)2	Motion Sensor §130.2(c)3	Field Inspector Pass	Field Inspector Fail
Parking Area	Astronomical Timer	Yes	Yes	☐	☐
Canopy Area	Astronomical Timer	Yes	Yes	☐	☐

*NOTES: Controls with a * require a note in the space below explaining how compliance is achieved.
EX: Not permitted by health & safety to be turned off; EXCEPTION 1 to §130.2(c).

I. LIGHTING POWER ALLOWANCE (per §140.7)

Table Continued

STATE OF CALIFORNIA

Outdoor Lighting

NRCC-LTO-E (Created 11/19) CALIFORNIA ENERGY COMMISSI19

CERTIFICATE OF COMPLIANCE	NRCC-LTO-E
Project Name: SCE Bishop Service Center Site Development	Report Page: Page 4 of 6
Project Address: 4000 W. Line St., Bishop, CA 93514	Date Prepared: 02/26/21

Table Continued

Table Instructions: Please complete this table for areas using the allowance calculations per §140.7. General Hardscape Allowance is per Table 140.7-A while "Use it or lost it" Allowances are per Table 140.7-B. Indicate which allowances are being used to expand sections for user input. Luminaires that qualify for one of the "Use it or lose it" allowances shall not qualify for another "Use it or lose it" allowance.	01	"Use it or lose it" Allowances (select all that apply)			
	☑ General Hardscape Allowance	☐ Per Application	☐ Sales Frontage	☐ Ornamental	☐ Per Specific Area
	Table I (below)	Table J	Table K	Table L	Table M

Calculated General Hardscape Lighting Power Allowance per Table 140.7-A (LZ 2 & 3)

02	03	04	05	06	07	08	09	10
		Area Wattage Allowance (AWA)			Linear Wattage Allowance (LWA)			
Area Description	Surface Type	Illuminated Area (ft^2)	Allowed Density (W/ft^2)	Area Allowance (Watts)	Perimeter Length (lf)	Allowed Density (W/lf)	Linear Allowance (Watts)	Total General AWA + LWA (Watts)
Parking Area	Asphalt	18,051	0.023	415.173	1,236	0.17	210.12	625.293
Canopy Area	Concrete	11,376	0.025	284.4	740	0.4	296	580.4
Initial Wattage Allowance for Entire Site (Watts):								**250**
Total General Hardscape Allowance (Watts):								**1,455.693**

J. LIGHTING ALLOWANCE: PER APPLICATION

This Section Does Not Apply

K. LIGHTING ALLOWANCE: SALES FRONTAGE

This Section Does Not Apply

L. LIGHTING ALLOWANCE: ORNAMENTAL

This Section Does Not Apply

M. LIGHTING ALLOWANCE: PER SPECIFIC AREA

This Section Does Not Apply

N. EXISTING CONDITIONS POWER ALLOWANCE (alterations only)

This Section Does Not Apply

STATE OF CALIFORNIA

Outdoor Lighting

NRCC-LTO-E (Created 11/19) CALIFORNIA ENERGY COMMISSI19

CERTIFICATE OF COMPLIANCE	NRCC-LTO-E
Project Name: SCE Bishop Service Center Site Development	Report Page: Page 5 of 6
Project Address: 4000 W. Line St., Bishop, CA 93514	Date Prepared: 02/26/21

O. DECLARATION OF REQUIRED CERTIFICATES OF INSTALLATION

Table Instructions: Selections have been made based on information provided in previous tables of this document. If any selection needs to be changed, please explain why in Table E. Additional Remarks. These documents must be provided to the building inspector during construction and can be found online at https://www.energy.ca.gov/title24/2019standards/2019_compliance_documents/Nonresidential_Documents/NRCI/

YES	NO	Form/Title	Field Inspector Pass	Field Inspector Fail
◉	◯	NRCI-LTO-01-E - Must be submitted for all buildings.	☐	☐
◉	◯	NRCI-LTO-02-E - Must be submitted for a lighting control system; or for an Energy Management Control System (EMCS), to be recognized for compliance.	☐	☐

P. DECLARATION OF REQUIRED CERTIFICATES OF ACCEPTANCE

Table Instructions: Selections have been made based on information provided in previous tables of this document. If any selection needs to be changed, please explain why in Table E. Additional Remarks. These documents must be provided to the building inspector during construction and must be completed through an Acceptance Test Technician Certification Provider (ATTCP). For more information visit: http://www.energy.ca.gov/title24/attcp/providers.html

YES	NO	Form/Title	Field Inspector Pass	Field Inspector Fail
◉	◯	NRCA-LTO-02-A - Must be submitted for all outdoor lighting controls except for alterations where controls area added to ≤ 20 luminaires.	☐	☐

STATE OF CALIFORNIA

Outdoor Lighting

NRCC-LTO-E (Created 11/19) CALIFORNIA ENERGY COMMISSION

CERTIFICATE OF COMPLIANCE	NRCC-LTO-E
Project Name: SCE Bishop Service Center Site Development	Report Page: Page 6 of 6
Project Address: 4000 W. Line St., Bishop, CA 93514	Date Prepared: 02/26/21

DOCUMENTATION AUTHOR'S DECLARATION STATEMENT

I certify that this Certificate of Compliance documentation is accurate and complete

Documentation Author Name:	JEFFRY GOSAL	Documentation Author Signature:	[signature]
Company:	Salas O'Brien	Signature Date:	02/16/21
Address:	305 South 11th Street	CEA/ HERS Certification Identification (if applicable):	
City/State/Zip:	San Jose, California 95112	Phone:	408-282-1500

RESPONSIBLE PERSON'S DECLARATION STATEMENT

I certify the following under penalty of perjury, under the laws of the State of California:

1. **The information provided on this Certificate of Compliance is true and correct.**
2. **I am eligible under Division 3 of the Business and Professions Code to accept responsibility for the building design or system design identified on this Certificate of Compliance (responsible designer)**
3. **The energy features and performance specifications, materials, components, and manufactured devices for the building design or system design identified on this Certificate of Compliance conform to the requirements of Title 24, Part 1 and Part 6 of the California Code of Regulations.**
4. **The building design features or system design features identified on this Certificate of Compliance are consistent with the information provided on other applicable compliance documents, worksheets, calculations, plans and specifications submitted to the enforcement agency for approval with this building permit application.**
5. **I will ensure that a completed signed copy of this Certificate of Compliance shall be made available with the building permit(s) issued for the building, and made available to the enforcement agency for all applicable inspections. I understand that a completed signed copy of this Certificate of Compliance is required to be included with the documentation the builder provides to the building owner at occupancy.**

Responsible Designer Name:	JEFFRY GOSAL	Responsible Designer Signature:	[signature]
Company :	Salas O'Brien	Date Signed:	02/26/21
Address:	305 South 11th Street	License:	E18084
City/State/Zip:	San Jose, California 95112	Phone:	408-282-1500

NO.	REVISIONS	DATE	SAP WO	SUPV	APPROVED	ENGR	CK'D	MADE	P.E.
2	ADDENDUM 1	02-26-2021							
	ADDENDUM A	11-18-2020							

REFERENCE DRAWINGS | REFERENCE DRAWINGS

SALAS O'BRIEN
|expect a difference|
305 South 11th Street
San Jose, California 95112-2218
408.282.1500 | 408.297.2995 (f)
salasobrien.com

REGISTERED PROFESSIONAL ENGINEER JEFFRY GOSAL No. E18084 ELECTRICAL STATE OF CALIFORNIA
02.26.2021 Date Signed:

PLANS PREPARED BY:
Blair, Church & Flynn
CONSULTING ENGINEERS
451 Clovis Avenue, Suite 200
Clovis, California 93612
Tel (559) 326-1400
Fax (559) 326-1500

LOCATION: BISHOP, CALIFORNIA

BISHOP SERVICE CENTER
SITE DEVELOPMENT
ELECTRICAL TITLE 24

VOLUME 1

SHEET NO. E0.4a (2)

SCALE: AS NOTED

51 OF 64 SHTS.

SOUTHERN CALIFORNIA EDISON An EDISON INTERNATIONAL Company

100% CONSTRUCTION DOCUMENTS (02-26-2021)

SOBE #191223a

SOUTHERN CALIFORNIA EDISON
2012 – 5 SIZE

Drawing: K:\drawings\Blair Church & Flynn\191223 SCE Bishop Service Center\191223a Site Development\191223E0.4a.dwg; LAYOUT – BCF.ctb
Plot by: minh.ong Mar 05, 2021 – 11:27am

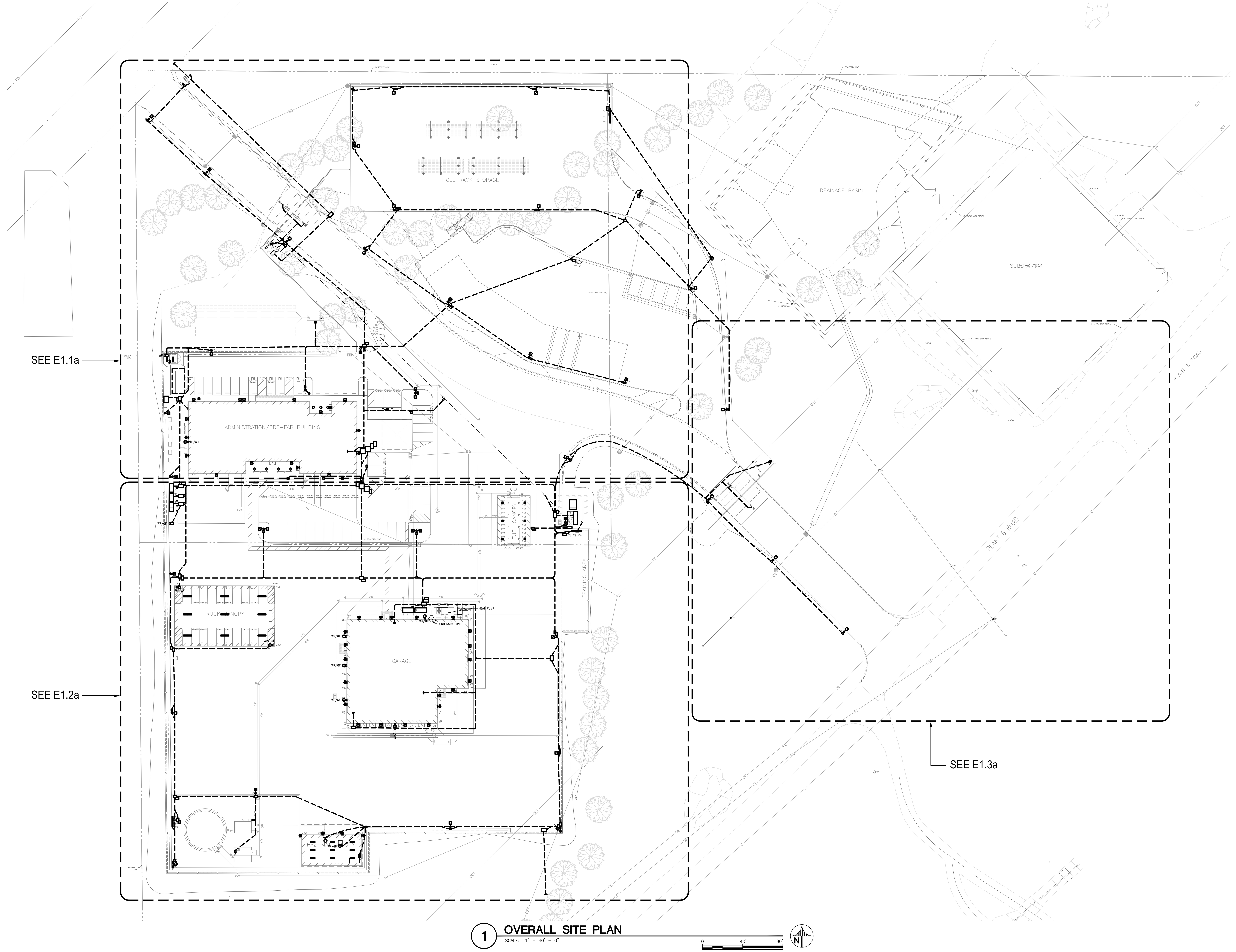

1 OVERALL SITE PLAN
SCALE: 1" = 40' - 0"

REFERENCE DRAWINGS	REFERENCE DRAWINGS	NO.	REVISIONS	DATE	SAP WO	SUPV	APPROVED	ENGR	CK'D	MADE	P.E.	NO.	REVISIONS	DATE	SAP WO	SUPV	APPROVED	ENGR	CK'D	MADE	P.E.
													ADDENDUM 1	02-26-2021							
													ADDENDUM A	11-18-2020							

SALAS O'BRIEN
|expect a difference|
305 South 11th Street
San Jose, California 95112-2218
408.282.1500 | 408.297.2995 (f)
salasobrien.com

REGISTERED PROFESSIONAL ENGINEER
JEFFRY GOSAL
No. E18084
ELECTRICAL
STATE OF CALIFORNIA
02.26.2021
Date Signed:

PLANS PREPARED BY:
Blair, Church & Flynn
CONSULTING ENGINEERS
451 Clovis Avenue, Suite 200
Clovis, California 93612
Tel (559) 326-1400
Fax (559) 326-1500

LOCATION: BISHOP, CALIFORNIA

BISHOP SERVICE CENTER
SITE DEVELOPMENT
ELECTRICAL OVERALL SITE PLAN
VOLUME 1

SOUTHERN CALIFORNIA EDISON
An EDISON INTERNATIONAL Company

SHEET NO.
E1.0a
SCALE: AS NOTED
52 OF 64 SHTS.

100% CONSTRUCTION DOCUMENTS (02-26-2021)
SOBE #191223a

SOUTHERN CALIFORNIA EDISON
2012 - 5 SIZE

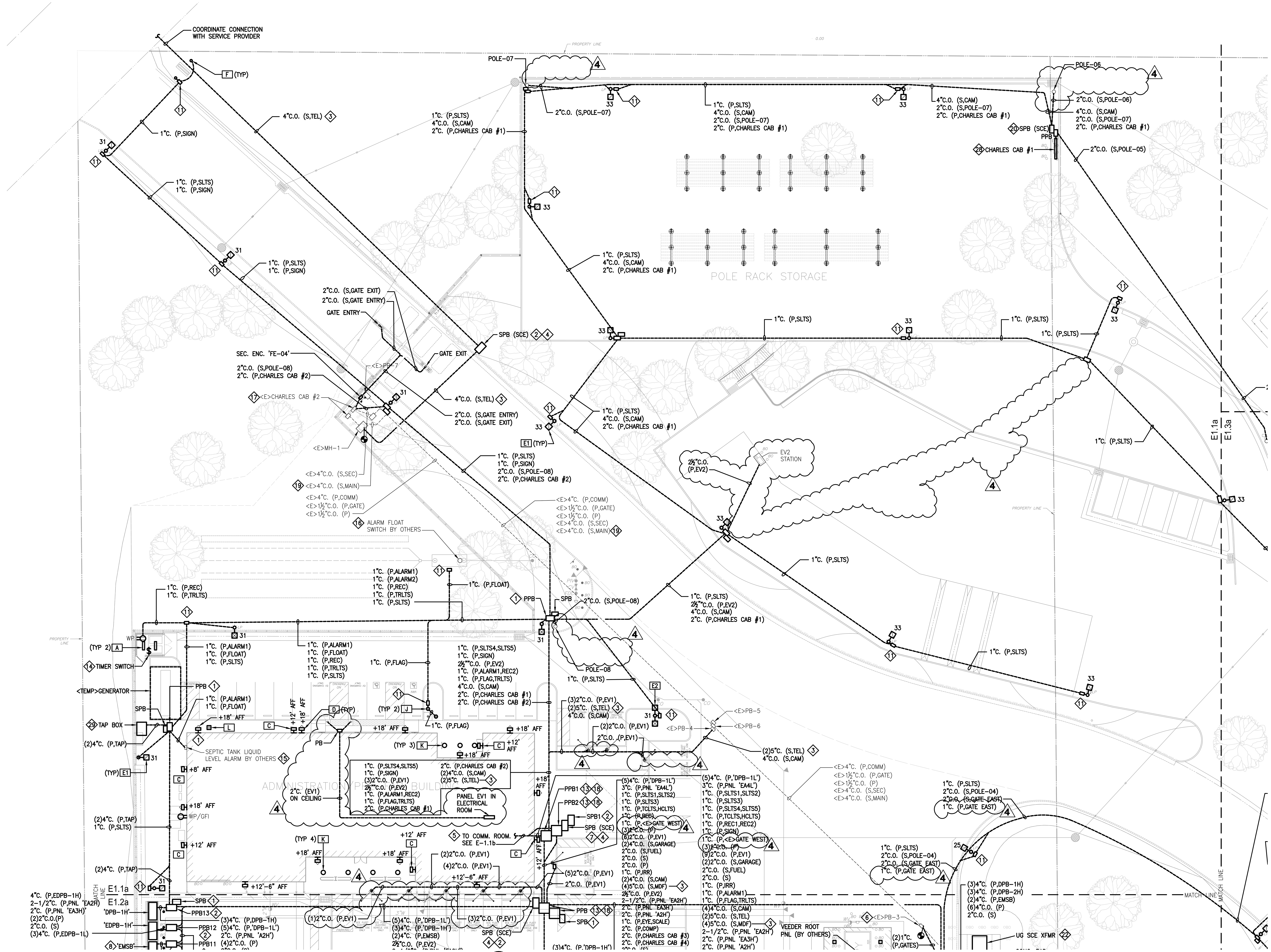

1 PARTIAL SITE PLAN

SCALE: 1" = 20' - 0"

GENERAL SHEET NOTES

A. ROUTING SHOWN IS DIAGRAMMATIC. CONTRACTOR SHALL COORDINATE ROUTING OF ELECTRICAL CONDUITS WITH OTHER UTILITIES.

B. USE (3)#4 AWG MINIMUM TO WIRE EACH RECEPTACLE U.O.N.

C. USE (3)#8 AWG MINIMUM TO WIRE EACH PARKING LOT & SITE LIGHTING FIXTURE CIRCUIT U.O.N.

D. USE (3)#8 MIN. TO WIRE EACH WALL AND CANOPY FIXTURE CIRCUIT, U.O.N.

E. UNDERGROUND PULLBOXES SHALL BE 17"x30", U.O.N. REFER TO DETAIL 5/E5.1a FOR PULLBOX INSTALLATION.

F. MARK ALL CONDUIT STUB-UP WITH PULLBOX.

G. ALL OUTDOOR RECEPTACLE OUTLETS SHALL BE GFCI, WEATHER RESISTANT AND BE PROVIDED WITH METAL, WEATHERPROOF, WHILE-IN-USE COVERS.

H. REFER TO SHEET E5.2a FOR PATHWAY AND PARKING LIGHT MOUNTING DETAILS.

I. REFER TO LIGHTING FIXTURE SCHEDULE FOR FIXTURE TYPE.

J. REFER TO 4/E5.1a FOR CONDUIT TRANSITION DETAIL.

K. PROVIDE CONDUIT AND WIRES TO LIGHT POLES FROM CLOSEST PULLBOX.

L. PROVIDE 12 INCH PULLBOX EXTENSION AT EVERY UNDERGROUND PULLBOX, U.O.N.

M. REFER TO VOLTAGE DROP TABLE AND SINGLE LINE DIAGRAM FOR LIGHTING WIRE SIZES.

N. SITE, CANOPY, PARKING LOT LIGHTING SHALL BE BE BY PANEL 'EA3H' LOCATED IN ELECTRICAL ROOM, U.O.N.

O. RECEPTACLES SHALL BE FED BY PANEL 'A1L' LOCATED IN ELECTRICAL ROOM, U.O.N.

P. REFER TO VOLUME 2 AND VOLUME 3 FOR FINAL LOCATIONS OF BUILDING WALL LIGHTS.

Q. REFER TO VOLUME 2 FOR PANEL SCHEDULES.

R. FOR CAMERA FIELD ENCLOSURES, REFER TO DETAIL 8/E5.3a.

⟨#⟩ REFERENCE SHEET NOTES

1. 30"x48" PULL BOX.
2. 3'x5' VAULT.
3. ROUTE 3" MAXCELL FABRIC INNERDUCTS WITH (3) CELLS AND MULETAPE INSIDE OF EACH CELL.
4. UNDERGROUND PULLBOX FOR TELECOM AND TELEPHONE PROVIDER CONNECTIONS. COORDINATE EXACT LOCATION WITH OWNER.
5. CONNECTION TO BE MADE INSIDE BUILDING. NO EXPOSED CONDUIT ALLOWED. REFER TO DETAIL 8/E5.2a.
6. INTERCEPT EXISTING GATE CONTROLLERS CIRCUITS FOR THE WEST GATES INSIDE EXISTING PULLBOX, VERIFY IN FIELD. EXTEND 1"C. – (8)#8 + #10 GND TO PANEL 'EA2L' INSIDE ELECTRICAL ROOM. ROUTE (3) HOTS AND (1) NEUTRAL TO EACH CONTROLLER. (4)
7. PROVIDE 3'x5' SCE VAULT. REFER TO SCE REQUIREMENTS.
8. AUTOMATIC TRANSFER SWITCH. ATS SHALL BE ASCO 7000 SERIES OR APPROVED EQUAL.
9. NEMA 3R, PANELBOARD MOUNTED ON POLE, REFER TO DETAIL 4/E5.3a.
10. PULL BOX FOR FUTURE ELECTRIC VEHICLE CHARGING STATION.
11. 10"x17" PULL BOX. TYPICAL FOR SITE LIGHTING AND UTILIZATION EQUIPMENT.
12. IRRIGATION CONTROLLER BY OTHERS. ROUTE 1"C. – (2)#6 + #8 GND FROM PANEL 'A2L'.
13. 5'x5' VAULT, OLD CASTLE OR APPROVED EQUAL.
14. MECHANICAL TIMER SWITCH, 12 HR MAX IN HOUR INCREMENTS, WITH METALLIC WEATHER PROOF COVER. SWITCH BRAND SHALL INTERMATIC #FD2HW OR APPROVED EQUAL.
15. SEPTIC TANK LIQUID LEVEL ALARM BY OTHERS. ROUTE 1"C. – (2)#8 + #10 GND FROM PANEL 'A2L'.
16. ALARM FLOAT SWITCH BY OTHERS. ROUTE 1"C. – (2)#12 FROM FROM FLOAT SWITCH TO SEPTIC TANK LEVEL ALARM PANEL LOCATED AT WEST OF BUILDING.
17. ROUTE 2"C. – (2)#1/0 + #1 GND FROM PANEL 'EA6L' LOCATED IN SECURITY ROOM.
18. ROUTE POWER CONDUIT EQUALLY DISTRIBUTED BETWEEN PULLBOXES PB1, PB2 AND PB3.
19. REUSE EXISTING CONDUITS FOR NEW TELEPHONE LINE. VERIFY IN FIELD.
20. 36"X60"X48" SCE PULLBOX, REFER TO DETAIL 1/E5.5a.
21. "CHARLES" CABINET, REFER TO DETAIL 1/E5.5a.
22. REPLACE EXISTING UNDERGROUND TRANSFORMER WITH NEW. COORDINATE WITH SCE. REFER TO SINGLE LINE DIAGRAM.
23. RELOCATE EXISTING 1600A, 208V SWITCHBOARD. REMOVE EXISTING CONCRETE PAD, SCE METER AND CT'S, COORDINATE WITH SCE. SWITCHBOARD SHALL BE RELOCATED AND REUSED TO FEED NEW ADMIN BUILDING LOADS. SWITCHBOARD IS EXPECTED TO BE TEMPORARILY DECOMMISSIONED FOR SEVERAL MONTHS, CONTRACTOR IS RESPONSIBLE FOR MAINTAINING PHYSICAL SECURITY AND ENVIRONMENTAL PROTECTION OF THE EQUIPMENT THE ENTIRE TIME:
    - SWITCHBOARD SHALL BE PROTECTED, KEPT DRY, AND FREE FROM CONDENSATION. CONTRACTOR SHALL PERFORM FULL PREVENTATIVE MAINTENANCE PER NETA MTS STANDARDS SHORTLY AFTER ITS TAKING OUT OF SERVICE AND SHORTLY BEFORE PLACING SWITCHBOARD BACK IN SERVICE.
    - MAINTENANCE SHALL INCLUDE BUT NOT BE LIMITED TO MECHANICAL INSPECTION AND ELECTRICAL TESTING SUCH AS: CLEANING, RETORQUING BUS CONNECTIONS, RETESTING BREAKER OPERATION, THERMOGRAPHIC SURVEY, VERIFING INTEGRITY OF BARRIERS, INSPECTION OF CONTROL TRANSFORMERS, RESISTANCE TESTING, GROUND-RESISTANCE TESTING, INSULATION TESTING, AND DIELECTRIC WITHSTAND VOLTAGE TESTING ON EACH BUS SECTION.
    - REFER TO MANUFACTURERS MAINTENANCE MANUAL FOR ADDITIONAL MAINTENANCE REQUIREMENTS.
24. INSTALL NEW 2000A, 480V SWITCHBOARD ON SAME LOCATION AS RELOCATED 1600A, 208V SWITCHBOARD. INSTALL GEAR ON NEW CONCRETE PAD.
25. ROUTE 1"C. – (2)#8 + #10 GND FROM PANEL 'A2L' INSIDE MAIN ADMIN BLDG ELECTRICAL ROOM.
26. ROUTE 2"C. – (3)#3/0 + #1 GND FROM PANEL 'A2L' INSIDE MAIN ADMIN BLDG ELECTRICAL ROOM.
27. ROUTE 1"C. – (2)#8 + #10 GND FROM PANEL 'A2L' INSIDE MAIN ADMIN BLDG ELECTRICAL ROOM.
28. ROUTE 2"C. – (2)#3/0 + #1 GND FROM PANEL 'EA6L' LOCATED IN SECURITY ROOM.
29. TAP BOX WITH CAM LOCKS, Z-POWER-&-DISTRIBUTION BRAND OR APPROVED EQUAL.
30. MTS, ASCO 300 SERIES OR APPROVED EQUAL, NEMA 3R RATED.
31. PANELBOARD, 208V, 1ø, 3 WIRE, 100A BUS, 50A MCB, 10KAMPS SCCR, DOOR-IN-DOOR COVER, FULLY RATED. PROVIDE WITH (6)20/1P CIRCUIT BREAKERS; CONFIRM EXACT QUANTITY WITH PUMP HOUSE MANUFACTURER.
32. ROUTE 1"C. – (2)#10 + #10 GND FROM PANEL B4L.
33. ROUTE 1½"C. – (4)#2 + #6 GND FROM PANEL 'EV1' IN ELECTRICAL ROOM. (4)
34. ROUTE 1"C. – (6)#8 + #10 GND FOR THE (2) EAST GATE CONTROLLERS FROM PANEL 'EA1L' IN ELECTRICAL ROOM. ROUTE (3)#8 FOR EACH CONTROLLER.

SALASO'BRIEN
| expect a difference |
305 South 11th Street
San Jose, California 95112-2218
408.282.1500 | 408.297.2995 (f)
salasobrien.com

REGISTERED PROFESSIONAL ENGINEER — JEFFRY GOSAL — No. E18084 — ELECTRICAL — STATE OF CALIFORNIA
11.16.2021
Date Signed:

PLANS PREPARED BY:
Blair, Church & Flynn
CONSULTING ENGINEERS
451 Clovis Avenue, Suite 200
Clovis, California 93612
Tel (559) 326-1400
Fax (559) 326-1500

NO.	REVISIONS	DATE	SAP WO	SUPV	APPROVED	ENGR	CK'D	MADE	P.E.
(4)	ADDENDUM 3	02-18-2022							
	ADDENDUM 2	12-01-2021							
	ADDENDUM 1	02-26-2021							
	ADDENDUM A	11-18-2020							

REFERENCE DRAWINGS | REFERENCE DRAWINGS

LOCATION: BISHOP, CALIFORNIA

BISHOP SERVICE CENTER
SITE DEVELOPMENT
ELECTRICAL PARTIAL SITE PLAN

VOLUME 1

SOUTHERN CALIFORNIA EDISON — An EDISON INTERNATIONAL Company

SHEET NO. E1.1a

SCALE: AS NOTED

53 OF 64 SHTS.

100% CONSTRUCTION DOCUMENTS (02-26-2021)

SOBE #191223a

Drawing: K:\drawings\Blair Church & Flynn\191223 SCE Bishop Service Center\191223c Site Development\191223E1.1a.dwg Layout1 - BCF.ctb
Plot by: minh.ong Feb 18, 2022 - 4:29pm
SOUTHERN CALIFORNIA EDISON
2012 - 5 SIZE

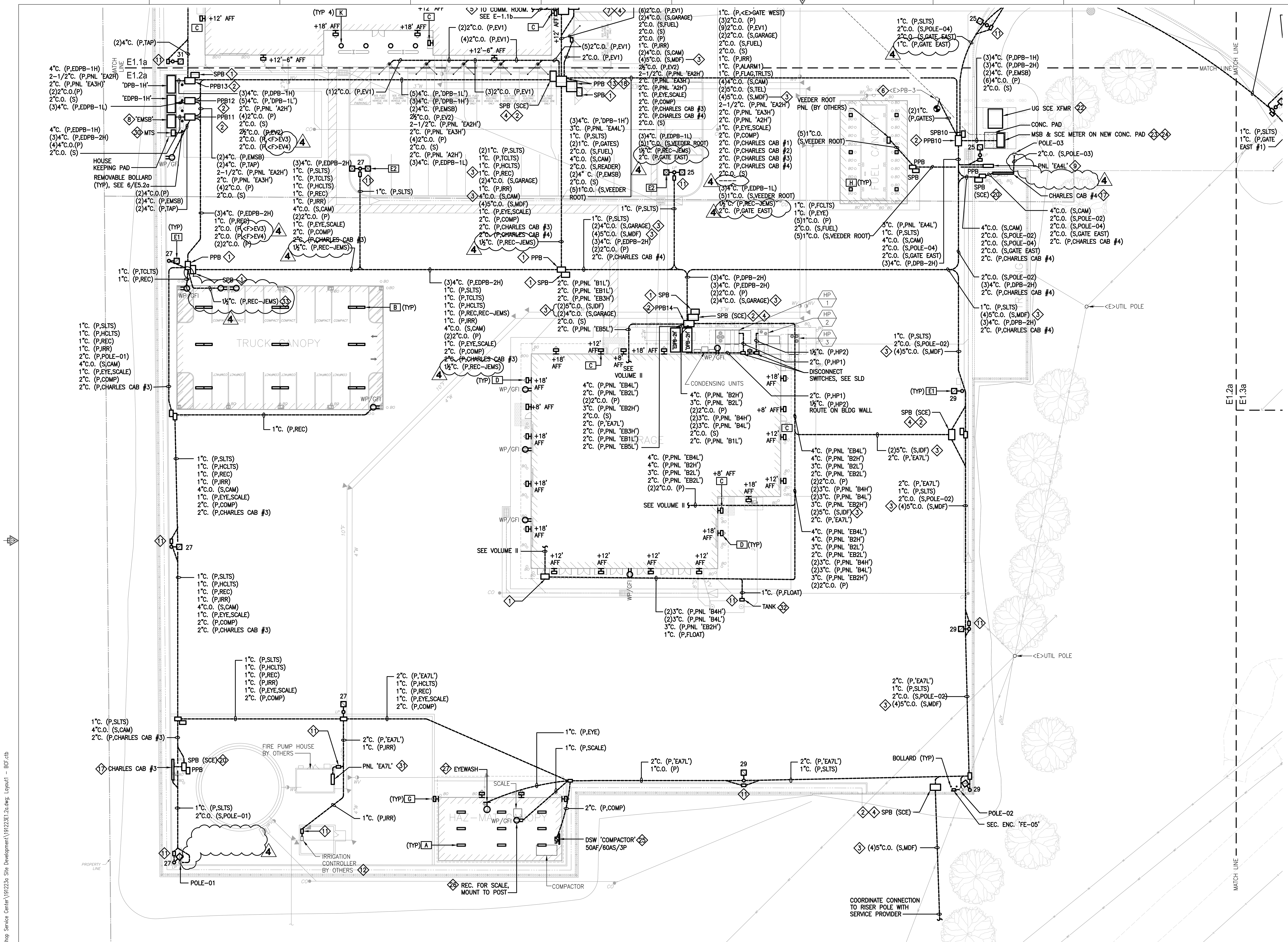

1 PARTIAL SITE PLAN
SCALE: 1" = 20' - 0"

GENERAL SHEET NOTES

A. ROUTING SHOWN IS DIAGRAMMATIC. CONTRACTOR SHALL COORDINATE ROUTING OF ELECTRICAL CONDUITS WITH OTHER UTILITIES.

B. USE (3)#4 AWG MINIMUM TO WIRE EACH RECEPTACLE U.O.N.

C. USE (3)#8 AWG MINIMUM TO WIRE EACH PARKING LOT & SITE LIGHTING FIXTURE CIRCUIT U.O.N.

D. USE (3)#8 MIN. TO WIRE EACH WALL AND CANOPY FIXTURE CIRCUIT, U.O.N.

E. UNDERGROUND PULLBOXES SHALL BE 17"x30", U.O.N. REFER TO DETAIL 5/E5.1a FOR PULLBOX INSTALLATION.

F. MARK ALL CONDUIT STUB-UP WITH PULLBOX.

G. ALL OUTDOOR RECEPTACLE OUTLETS SHALL BE GFCI, WEATHER RESISTANT AND BE PROVIDED WITH METAL, WEATHERPROOF, WHILE-IN-USE COVERS.

H. REFER TO SHEET E5.2a FOR PATHWAY AND PARKING LIGHT MOUNTING DETAILS.

I. REFER TO LIGHTING FIXTURE SCHEDULE FOR FIXTURE TYPE.

J. REFER TO 4/E5.1a FOR CONDUIT TRANSITION DETAIL.

K. PROVIDE CONDUIT AND WIRES TO LIGHT POLES FROM CLOSEST PULLBOX.

L. PROVIDE 12 INCH PULLBOX EXTENSION AT EVERY UNDERGROUND PULLBOX, U.O.N.

M. REFER TO VOLTAGE DROP TABLE AND SINGLE LINE DIAGRAM FOR LIGHTING WIRE SIZES.

N. SITE, CANOPY, PARKING LOT LIGHTING SHALL BE BE BY PANEL 'EA3H' LOCATED IN ELECTRICAL ROOM, U.O.N.

O. RECEPTACLES SHALL BE FED BY PANEL 'A1L' LOCATED IN ELECTRICAL ROOM, U.O.N.

P. REFER TO VOLUME 2 AND VOLUME 3 FOR FINAL LOCATIONS OF BUILDING WALL LIGHTS.

Q. REFER TO VOLUME 2 FOR PANEL SCHEDULES.

R. FOR CAMERA FIELD ENCLOSURES, REFER TO DETAIL 8/E5.3a.

⟨#⟩ REFERENCE SHEET NOTES

1. 30"x48" PULL BOX.
2. 3'x5' VAULT.
3. ROUTE 3" MAXCELL FABRIC INNERDUCTS WITH (3) CELLS AND MULETAPE INSIDE OF EACH CELL.
4. UNDERGROUND PULLBOX FOR TELECOM AND TELEPHONE PROVIDER CONNECTIONS. COORDINATE EXACT LOCATION WITH OWNER.
5. CONNECTION TO BE MADE INSIDE BUILDING. NO EXPOSED CONDUIT ALLOWED. REFER TO DETAIL 8/E5.2a.
6. INTERCEPT EXISTING GATE CONTROLLERS CIRCUITS FOR THE WEST GATES INSIDE EXISTING PULLBOX, VERIFY IN FIELD. EXTEND 1"C. – (8)#8 + #10 GND TO PANEL 'EA2L' INSIDE ELECTRICAL ROOM. ROUTE (3) HOTS AND (1) NEUTRAL TO EACH CONTROLLER. (4)
7. PROVIDE 3'x5' SCE VAULT. REFER TO SCE REQUIREMENTS.
8. AUTOMATIC TRANSFER SWITCH. ATS SHALL BE ASCO 7000 SERIES OR APPROVED EQUAL.
9. NEMA 3R, PANELBOARD MOUNTED ON POLE, REFER TO DETAIL 4/E5.3a.
10. PULL BOX FOR FUTURE ELECTRIC VEHICLE CHARGING STATION.
11. 10"x17" PULL BOX. TYPICAL FOR SITE LIGHTING AND UTILIZATION EQUIPMENT.
12. IRRIGATION CONTROLLER BY OTHERS. ROUTE 1"C. – (2)#6 + #8 GND FROM PANEL 'A2L'.
13. 5'x5' VAULT, OLD CASTLE OR APPROVED EQUAL.
14. MECHANICAL TIMER SWITCH, 12 HR MAX IN HOUR INCREMENTS, WITH METALLIC WEATHER PROOF COVER. SWITCH BRAND SHALL INTERMATIC #FD2HW OR APPROVED EQUAL.
15. SEPTIC TANK LIQUID LEVEL ALARM BY OTHERS. ROUTE 1"C. – (2)#8 + #10 GND FROM PANEL 'A2L'.
16. ALARM FLOAT SWITCH BY OTHERS. ROUTE 1"C. – (2)#12 FROM FROM FLOAT SWITCH TO SEPTIC TANK LEVEL ALARM PANEL LOCATED AT WEST OF BUILDING.
17. ROUTE 2"C. – (2)#1/0 + #1 GND FROM PANEL 'EA6L' LOCATED IN SECURITY ROOM.
18. ROUTE POWER CONDUIT EQUALLY DISTRIBUTED BETWEEN PULLBOXES PB1, PB2 AND PB3.
19. REUSE EXISTING CONDUITS FOR NEW TELEPHONE LINE. VERIFY IN FIELD.
20. 36"X60"X48" SCE PULLBOX, REFER TO DETAIL 1/E5.5a.
21. "CHARLES" CABINET, REFER TO DETAIL 1/E5.5a.
22. REPLACE EXISTING UNDERGROUND TRANSFORMER WITH NEW. COORDINATE WITH SCE. REFER TO SINGLE LINE DIAGRAM.
23. RELOCATE EXISTING 1600A, 208V SWITCHBOARD. REMOVE EXISTING CONCRETE PAD, SCE METER AND CT'S, COORDINATE WITH SCE. SWITCHBOARD SHALL BE RELOCATED AND REUSED TO FEED NEW ADMIN BUILDING LOADS. SWITCHBOARD IS EXPECTED TO BE TEMPORARILY DECOMMISSIONED FOR SEVERAL MONTHS, CONTRACTOR IS RESPONSIBLE FOR MAINTAINING PHYSICAL SECURITY AND ENVIRONMENTAL PROTECTION OF THE EQUIPMENT THE ENTIRE TIME:
    - SWITCHBOARD SHALL BE PROTECTED, KEPT DRY, AND FREE FROM CONDENSATION. CONTRACTOR SHALL PERFORM FULL PREVENTATIVE MAINTENANCE PER NETA MTS STANDARDS SHORTLY AFTER ITS TAKING OUT OF SERVICE AND SHORTLY BEFORE PLACING SWITCHBOARD BACK IN SERVICE.
    - MAINTENANCE SHALL INCLUDE BUT NOT BE LIMITED TO MECHANICAL INSPECTION AND ELECTRICAL TESTING SUCH AS: CLEANING, RETORQUING BUS CONNECTIONS, RETESTING BREAKER OPERATION, THERMOGRAPHIC SURVEY, VERIFING INTEGRITY OF BARRIERS, INSPECTION OF CONTROL TRANSFORMERS, RESISTANCE TESTING, GROUND-RESISTANCE TESTING, INSULATION TESTING, AND DIELECTRIC WITHSTAND VOLTAGE TESTING ON EACH BUS SECTION.
    - REFER TO MANUFACTURERS MAINTENANCE MANUAL FOR ADDITIONAL MAINTENANCE REQUIREMENTS.
24. INSTALL NEW 2000A, 480V SWITCHBOARD ON SAME LOCATION AS RELOCATED 1600A, 208V SWITCHBOARD. INSTALL GEAR ON NEW CONCRETE PAD.
25. ROUTE 1"C. – (2)#8 + #10 GND FROM PANEL 'A2L' INSIDE MAIN ADMIN BLDG ELECTRICAL ROOM.
26. ROUTE 2"C. – (3)#3/0 + #1 GND FROM PANEL 'A2L' INSIDE MAIN ADMIN BLDG ELECTRICAL ROOM.
27. ROUTE 1"C. – (2)#8 + #10 GND FROM PANEL 'A2L' INSIDE MAIN ADMIN BLDG ELECTRICAL ROOM.
28. ROUTE 2"C. – (2)#3/0 + #1 GND FROM PANEL 'EA6L' LOCATED IN SECURITY ROOM.
29. TAP BOX WITH CAM LOCKS, Z-POWER-&-DISTRIBUTION BRAND OR APPROVED EQUAL.
30. MTS, ASCO 300 SERIES OR APPROVED EQUAL, NEMA 3R RATED.
31. PANELBOARD, 208V, 1ø, 3 WIRE, 100A BUS, 50A MCB, 10KAMPS SCCR, DOOR-IN-DOOR COVER, FULLY RATED. PROVIDE WITH (6)20/1P CIRCUIT BREAKERS; CONFIRM EXACT QUANTITY WITH PUMP HOUSE MANUFACTURER.
32. ROUTE 1"C. – (2)#10 + #10 GND FROM PANEL B4L.
33. ROUTE 1½"C. – (4)#2 + #6 GND FROM PANEL 'EV1' IN ELECTRICAL ROOM. (4)
34. ROUTE 1"C. – (6)#8 + #10 GND FOR THE (2) EAST GATE CONTROLLERS FROM PANEL 'EA1L' IN ELECTRICAL ROOM. ROUTE (3)#8 FOR EACH CONTROLLER.

SALASO'BRIEN
| expect a difference |
305 South 11th Street
San Jose, California 95112-2218
408.282.1500 | 408.297.2995 (f)
salasobrien.com

REGISTERED PROFESSIONAL ENGINEER — JEFFRY GOSAL — No. E18084 — ELECTRICAL — STATE OF CALIFORNIA
11.16.2021
Date Signed:

PLANS PREPARED BY:
Blair, Church & Flynn
CONSULTING ENGINEERS
451 Clovis Avenue, Suite 200
Clovis, California 93612
Tel (559) 326-1400
Fax (559) 326-1500

NO.	REVISIONS	DATE	SAP WO	SUPV	APPROVED	ENGR	CK'D	MADE	P.E.
4	ADDENDUM 3	02-18-2022							
	ADDENDUM 2	12-01-2021							
	ADDENDUM 1	02-26-2021							
	ADDENDUM A	11-18-2020							

REFERENCE DRAWINGS	REFERENCE DRAWINGS	NO.	REVISIONS	DATE	SAP WO	SUPV	APPROVED	ENGR	CK'D	MADE	P.E.

LOCATION: BISHOP, CALIFORNIA

BISHOP SERVICE CENTER
SITE DEVELOPMENT
ELECTRICAL PARTIAL SITE PLAN
VOLUME 1

SOUTHERN CALIFORNIA EDISON — An EDISON INTERNATIONAL Company

SHEET NO. E1.2a
SCALE: AS NOTED
54 OF 64 SHTS.

100% CONSTRUCTION DOCUMENTS (02-26-2021)
SOBE #191223a

Drawing: K:\drawings\Blair Church & Flynn\191223 SCE Bishop Service Center\191223a Site Development\191223E1.2a.dwg Layout1 - BCF.ctb
Plot by: minh.ong Feb 18, 2022 - 4:30pm
SOUTHERN CALIFORNIA EDISON
2012 - 5 SIZE

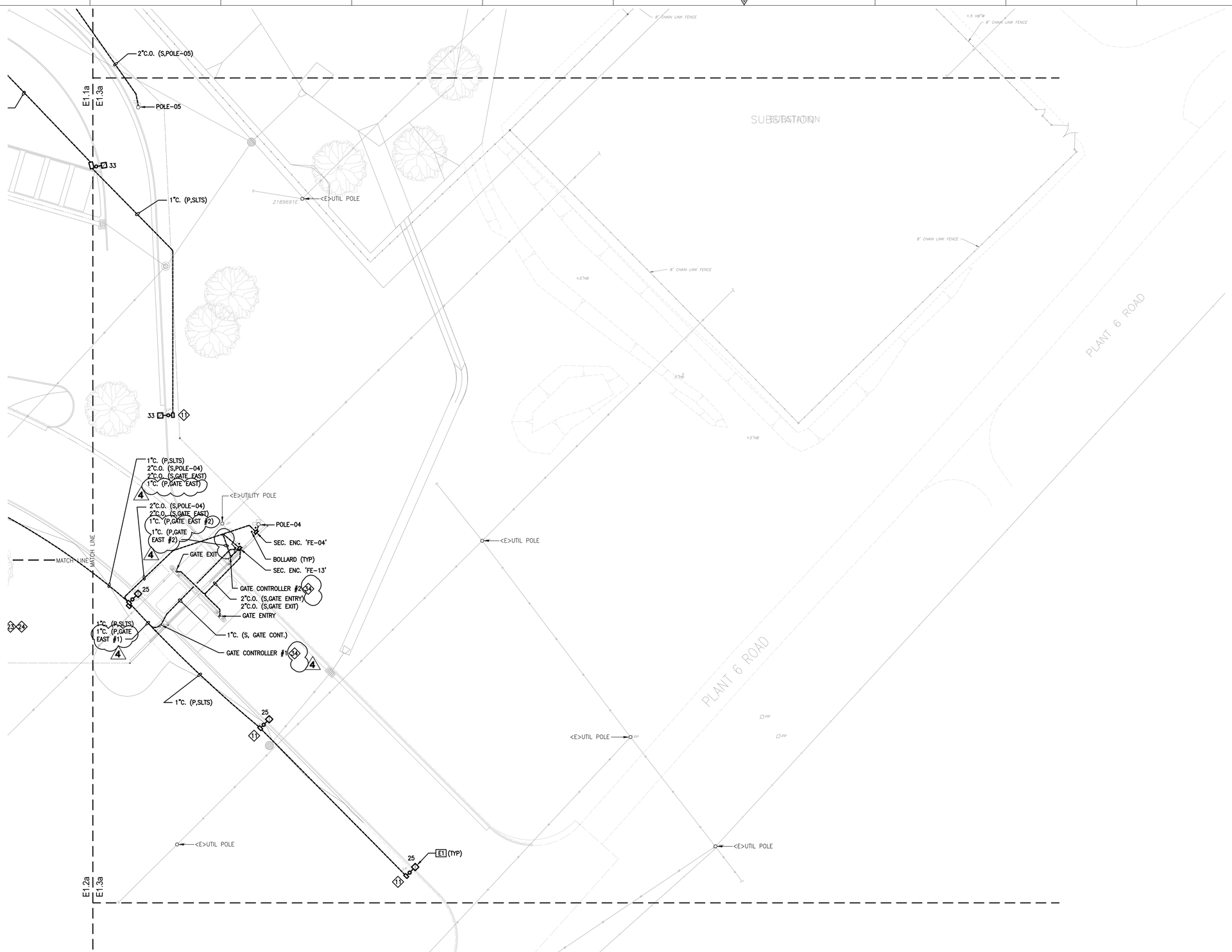

1 PARTIAL SITE PLAN

SCALE: 1" = 20' - 0"

0 20' 40'

GENERAL SHEET NOTES

A. ROUTING SHOWN IS DIAGRAMMATIC. CONTRACTOR SHALL COORDINATE ROUTING OF ELECTRICAL CONDUITS WITH OTHER UTILITIES.

B. USE (3)#4 AWG MINIMUM TO WIRE EACH RECEPTACLE U.O.N.

C. USE (3)#8 AWG MINIMUM TO WIRE EACH PARKING LOT & SITE LIGHTING FIXTURE CIRCUIT U.O.N.

D. USE (3)#8 MIN. TO WIRE EACH WALL AND CANOPY FIXTURE CIRCUIT, U.O.N.

E. UNDERGROUND PULLBOXES SHALL BE 17"x30", U.O.N. REFER TO DETAIL 5/E5.1a FOR PULLBOX INSTALLATION.

F. MARK ALL CONDUIT STUB-UP WITH PULLBOX.

G. ALL OUTDOOR RECEPTACLE OUTLETS SHALL BE GFCI, WEATHER RESISTANT AND BE PROVIDED WITH METAL, WEATHERPROOF, WHILE-IN-USE COVERS.

H. REFER TO SHEET E5.2a FOR PATHWAY AND PARKING LIGHT MOUNTING DETAILS.

I. REFER TO LIGHTING FIXTURE SCHEDULE FOR FIXTURE TYPE.

J. REFER TO 4/E5.1a FOR CONDUIT TRANSITION DETAIL.

K. PROVIDE CONDUIT AND WIRES TO LIGHT POLES FROM CLOSEST PULLBOX.

L. PROVIDE 12 INCH PULLBOX EXTENSION AT EVERY UNDERGROUND PULLBOX, U.O.N.

M. REFER TO VOLTAGE DROP TABLE AND SINGLE LINE DIAGRAM FOR LIGHTING WIRE SIZES.

N. SITE, CANOPY, PARKING LOT LIGHTING SHALL BE BE BY PANEL 'EA3H' LOCATED IN ELECTRICAL ROOM, U.O.N.

O. RECEPTACLES SHALL BE FED BY PANEL 'A1L' LOCATED IN ELECTRICAL ROOM, U.O.N.

P. REFER TO VOLUME 2 AND VOLUME 3 FOR FINAL LOCATIONS OF BUILDING WALL LIGHTS.

Q. REFER TO VOLUME 2 FOR PANEL SCHEDULES.

R. FOR CAMERA FIELD ENCLOSURES, REFER TO DETAIL 8/E5.3a.

REFERENCE SHEET NOTES

1. 30"x48" PULL BOX.
2. 3'x5' VAULT.
3. ROUTE 3" MAXCELL FABRIC INNERDUCTS WITH (3) CELLS AND MULETAPE INSIDE OF EACH CELL.
4. UNDERGROUND PULLBOX FOR TELECOM AND TELEPHONE PROVIDER CONNECTIONS. COORDINATE EXACT LOCATION WITH OWNER.
5. CONNECTION TO BE MADE INSIDE BUILDING. NO EXPOSED CONDUIT ALLOWED. REFER TO DETAIL 8/E5.2a.
6. INTERCEPT EXISTING GATE CONTROLLERS CIRCUITS FOR THE WEST GATES INSIDE EXISTING PULLBOX. VERIFY IN FIELD. EXTEND 1"C. – (8)#8 GND FROM PANEL 'EA3L' INSIDE ELECTRICAL ROOM. ROUTE (3) HOTS AND (1) NEUTRAL TO EACH CONTROLLER. 4
7. PROVIDE 3'x5' SCE VAULT. REFER TO SCE REQUIREMENTS.
8. AUTOMATIC TRANSFER SWITCH. ATS SHALL BE ASCO 7000 SERIES OR APPROVED EQUAL.
9. NEMA 3R, PANELBOARD MOUNTED ON POLE, REFER TO DETAIL 4/E5.3a.
10. PULL BOX FOR FUTURE ELECTRIC VEHICLE CHARGING STATION.
11. 10"x17" PULL BOX. TYPICAL FOR SITE LIGHTING AND UTILIZATION EQUIPMENT.
12. IRRIGATION CONTROLLER BY OTHERS. ROUTE 1"C. – (2)#6 + #8 GND FROM PANEL 'A2L'.
13. 5'x5' VAULT, OLD CASTLE OR APPROVED EQUAL.
14. MECHANICAL TIMER SWITCH, 12 HR MAX IN HOUR INCREMENTS, WITH METALLIC WEATHER PROOF COVER. SWITCH BRAND SHALL INTERMATIC #FD2HW OR APPROVED EQUAL.
15. SEPTIC TANK LIQUID LEVEL ALARM BY OTHERS. ROUTE 1"C. – (2)#8 + #10 GND FROM PANEL 'A2L'.
16. ALARM FLOAT SWITCH BY OTHERS. ROUTE 1"C. – (2)#12 FROM FROM FLOAT SWITCH TO SEPTIC TANK LEVEL ALARM PANEL LOCATED AT WEST OF BUILDING.
17. ROUTE 2"C. – (2)#1/0 + #1 GND FROM PANEL 'EA6L' LOCATED IN SECURITY ROOM.
18. ROUTE POWER CONDUIT EQUALLY DISTRIBUTED BETWEEN PULLBOXES PB1, PB2 AND PB3.
19. REUSE EXISTING CONDUITS FOR NEW TELEPHONE LINE. VERIFY IN FIELD.
20. 36"X60"X48" SCE PULLBOX, REFER TO DETAIL 1/E5.5a.
21. "CHARLES" CABINET, REFER TO DETAIL 1/E5.5a.
22. REPLACE EXISTING UNDERGROUND TRANSFORMER WITH NEW. COORDINATE WITH SCE. REFER TO SINGLE LINE DIAGRAM.
23. RELOCATE EXISTING 1600A, 208V SWITCHBOARD. REMOVE EXISTING CONCRETE PAD, SCE METER AND CT'S, COORDINATE WITH SCE. SWITCHBOARD SHALL BE RELOCATED AND REUSED TO FEED NEW ADMIN BUILDING LOADS. SWITCHBOARD IS EXPECTED TO BE TEMPORARILY DECOMMISSIONED FOR SEVERAL MONTHS, CONTRACTOR IS RESPONSIBLE FOR MAINTAINING PHYSICAL SECURITY AND ENVIRONMENTAL PROTECTION OF THE EQUIPMENT THE ENTIRE TIME:
    - SWITCHBOARD SHALL BE PROTECTED, KEPT DRY, AND FREE FROM CONDENSATION. CONTRACTOR SHALL PERFORM FULL PREVENTATIVE MAINTENANCE PER NETA MTS STANDARDS SHORTLY AFTER ITS TAKING OUT OF SERVICE AND SHORTLY BEFORE PLACING SWITCHBOARD BACK IN SERVICE.
    - MAINTENANCE SHALL INCLUDE BUT NOT BE LIMITED TO MECHANICAL INSPECTION AND ELECTRICAL TESTING SUCH AS: CLEANING, RETORQUING BUS CONNECTIONS, RETESTING BREAKER OPERATION, THERMOGRAPHIC SURVEY, VERIFING INTEGRITY OF BARRIERS, INSPECTION OF CONTROL TRANSFORMERS, RESISTANCE TESTING, GROUND-RESISTANCE TESTING, INSULATION TESTING, AND DIELECTRIC WITHSTAND VOLTAGE TESTING ON EACH BUS SECTION.
    - REFER TO MANUFACTURERS MAINTENANCE MANUAL FOR ADDITIONAL MAINTENANCE REQUIREMENTS.
24. INSTALL NEW 2000A, 480V SWITCHBOARD ON SAME LOCATION AS RELOCATED 1600A, 208V SWITCHBOARD. INSTALL GEAR ON NEW CONCRETE PAD.
25. ROUTE 1"C. – (2)#8 + #10 GND FROM PANEL 'A2L' INSIDE MAIN ADMIN BLDG ELECTRICAL ROOM.
26. ROUTE 2"C. – (3)#3/0 + #1 GND FROM PANEL 'A2L' INSIDE MAIN ADMIN BLDG ELECTRICAL ROOM.
27. ROUTE 1"C. – (2)#8 + #10 GND FROM PANEL 'A2L' INSIDE MAIN ADMIN BLDG ELECTRICAL ROOM.
28. ROUTE 2"C. – (2)#3/0 + #1 GND FROM PANEL 'EA6L' LOCATED IN SECURITY ROOM.
29. TAP BOX WITH CAM LOCKS, Z-POWER-&-DISTRIBUTION BRAND OR APPROVED EQUAL.
30. MTS, ASCO 300 SERIES OR APPROVED EQUAL, NEMA 3R RATED.
31. PANELBOARD, 208V, 1ø, 3 WIRE, 100A BUS, 50A MCB, 10KAMPS SCCR, DOOR-IN-DOOR COVER, FULLY RATED. PROVIDE WITH (6)20/1P CIRCUIT BREAKERS; CONFIRM EXACT QUANTITY WITH PUMP HOUSE MANUFACTURER.
32. ROUTE 1"C. – (2)#10 + #10 GND FROM PANEL B4L.
33. ROUTE 1½"C. – (4)#2 + #6 GND FROM PANEL 'EV1' IN ELECTRICAL ROOM. 4
34. ROUTE 1"C. – (6)#8 + #10 GND FOR THE (2) EAST GATE CONTROLLERS FROM PANEL 'EA1L' IN ELECTRICAL ROOM. ROUTE (3)#8 FOR EACH CONTROLLER.

SALASO'BRIEN
| expect a difference |
305 South 11th Street
San Jose, California 95112-2218
408.282.1500 | 408.297.2995 (f)
salasobrien.com

REGISTERED PROFESSIONAL ENGINEER JEFFRY GORTI No. E8084 ELECTRICAL STATE OF CALIFORNIA

11.16.2021
Date Signed:

PLANS PREPARED BY:
Blair, Church & Flynn
CONSULTING ENGINEERS
455 Clovis Avenue, Suite 200
Clovis, California 93612
Tel (559) 326-1400
Fax (559) 326-1500

REFERENCE DRAWINGS	REFERENCE DRAWINGS	NO.	REVISIONS	DATE	SAP WO	SUPV	APPROVED	ENGR	CK'D	MADE	P.E.	NO.	REVISIONS	DATE	SAP WO	SUPV	APPROVED	ENGR	CK'D	MADE	P.E.
													ADDENDUM 3	02-18-2022							
													ADDENDUM 2	12-01-2021							
													ADDENDUM 1	02-26-2021							
													ADDENDUM A	11-18-2020							

LOCATION: BISHOP, CALIFORNIA

BISHOP SERVICE CENTER
SITE DEVELOPMENT
ELECTRICAL PARTIAL SITE PLAN

VOLUME 1

SOUTHERN CALIFORNIA EDISON An EDISON INTERNATIONAL Company

SHEET NO.
E1.3a

SCALE: AS NOTED

55 OF 64 SHTS.

100% CONSTRUCTION DOCUMENTS (02-26-2021)

SOBE #191223a

Drawing: K:\drawings\Blair Church & Flynn\191223 SCE Bishop Service Center\191223E1.3a.dwg, Layout1 - BCF.ctb
Plot by: mmberg Feb 02, 2022 - 4:24pm

SOUTHERN CALIFORNIA EDISON
2012 – 5 SIZE

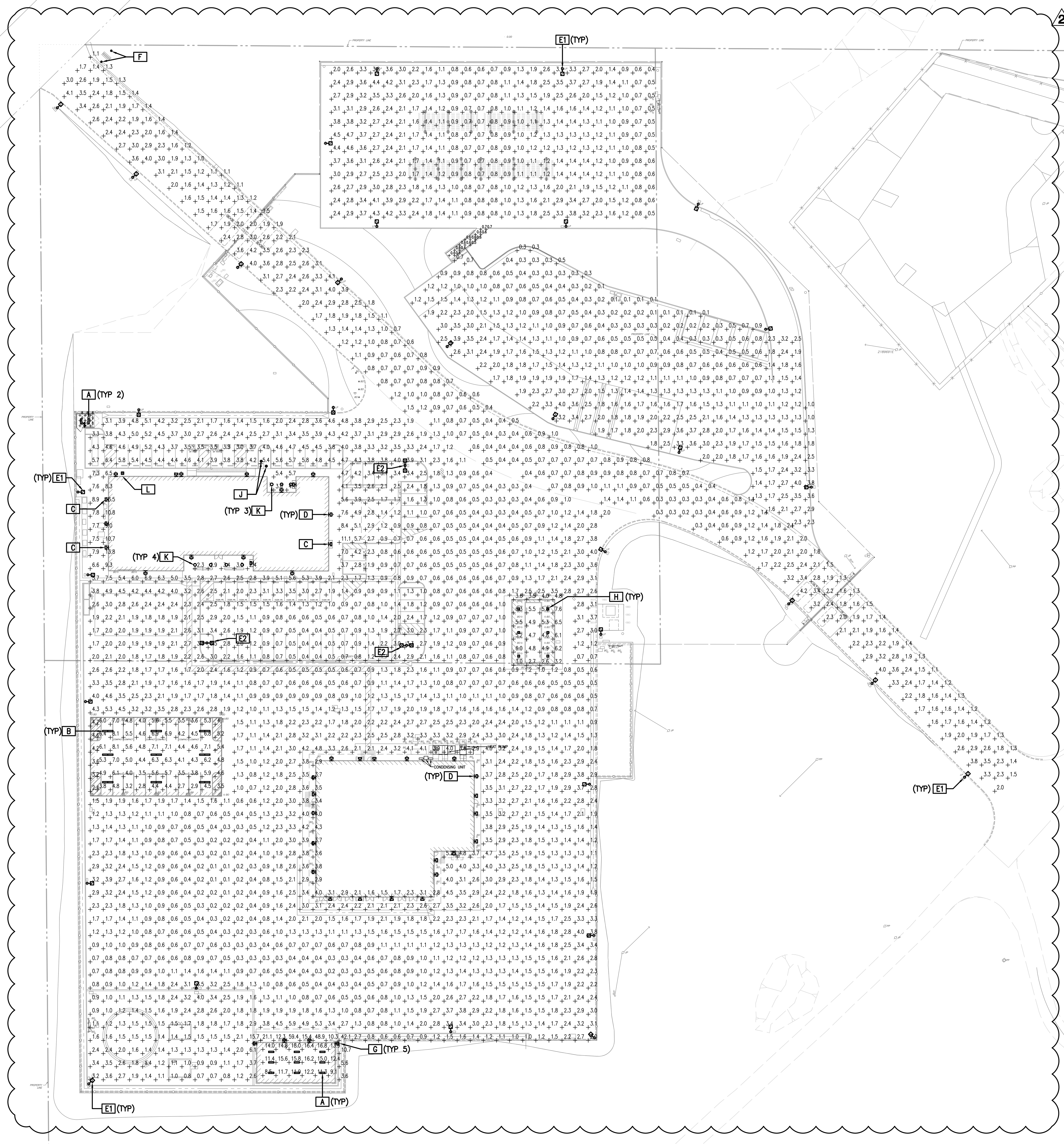

1 OVERALL SITE PLAN
SCALE: 1" = 40' - 0"

SCHEDULES

TYPE	SYMBOL	MANUFACTURER	CATALOG NO.	MAX VA.	LAMPING	MOUNTING	DESCRIPTION
A		SPECGRADELED	ARIB-40-30K-120-V01-GR-MOUNTING-VDIM USE EXTERNA ACUITY BRANDS RSBOR OCCUPANCY SENSOR TIED TO LCP FOR CONTROL	40	LED	PENDANT +16' AFF	HAZ-MAT CANOPY & TRASH ENCLOSURE: CLASS 1 DIV. 1/CLASS 1 DIV. 2 RATED 4' LINEAR. MOUNT AT 16' AFF. PROVIDE WITH MOTION AND PHOTO SENSORS. DIM LIGHT LEVEL TO 50%. BUG RATING: 3,0,1
B		LITHONIA LIGHTING	FEX L48 6000LM FGFL MD MVOLT GZ10 30K 80CRI MOUNTING NLTAIR2 RSBG6 FINISH	40	LED	SURFACE +18' AFF	TRUCK CANOPY: CLASS 1 DIV. 1/CLASS 1 DIV. 2 RATED, (2)4 FEET LONG, WET LOCATION, MOTION SENSOR DIM LIGHT TO 50%. BUG RATING: 2,0,1
C		LITHONIA LIGHTING	WDGE3 LED P1 30K 70CRI R4 MVOLT MOUNTING OPTIONS NLTAIR2 PIR FINISH	52	LED	WALL HEIGHTS PER SITE	ADMIN AND GARAGE BUILDING PERIMETER/SITE WALL: WALL WASHER, MOTION SENSOR DIM LIGHT TO 50%. BUG RATING: 1,0,2
D		LITHONIA LIGHTING	WDGE3 LED P2 30K 70CRI R3 MVOLT MOUNTING OPTIONS NLTAIR2 PIRH FINISH	59	LED	WALL HEIGHTS PER SITE	ADMIN AND GARAGE BUILDING PERIMETER/SITE WALL: WALL WASHER, MOTION SENSOR DIM LIGHT TO 50%, SEE PLAN FOR HEIGHT MOUNTING. BUG RATING: 1,0,2
E1		LITHONIA LIGHTING	1x RSX2 P2 30K R4 MVOLT RPA OPTIONS FINISH (HEAD) + RSS 27' *B DM19AS FINISH (27' POLE)	114	LED	POLE +27' AFF	SITE/PARKING LOT: LED POINTS DOWNWARD. BUG RATING: 2,0,3
E2		LITHONIA LIGHTING	2x RSX1 P2 30K R4 MVOLT RPA OPTIONS NLTAIR2 PIRHN FINISH (HEAD) + RSS 27' *B DM28AS FINISH (27' POLE)	142	LED	POLE +27' AFF	SITE/PARKING LOT: LED POINTS DOWNWARD. BUG RATING: 2,0,2
F		LITHONIA LIGHTING	OLBF 8 30K DDB	11	LED	SURFACE	SIGN: FLOOD LIGHT, WITH INTEGRATED GLARE SHIELD. BUG RATING: 1,0,0
G		SPECGRADELED	DELA-60-30K-120-V01-GR-MOUNTING-VDIM MOD VISOR USE EXTERNA ACUITY BRANDS RSBOR OCCUPANCY SENSOR TIED TO LCP FOR CONTROL	60	LED	COLUMN +10 AFF	HAZ-MAT CANOPY: FLOOD LIGHT, ADJUSTABLE WITH GLARE SHIELD, PROVIDE W/ REMOTE MOTION SENSOR DIM LIGHT TO 50%. BUG RATING: 3,2,0
H		SPECGRADELED	DELA-20-30K-120-V01-GR- MOUNTING-VDIM USE EXTERNA ACUITY BRANDS RSBOR OCCUPANCY SENSOR TIED TO LCP FOR CONTROL	20	LED	PENDANT +18' AFF	FUEL CANOPY: CLASS 1 DIV. 1/CLASS 1 DIV. 2 RATED, 12" SQUARE, DIE CAST ALUMINUM HOUSE AND STAINLESS STEEL HARDWARE, PROVIDE W/ REMOTE MOTION SENSOR DIM LIGHT TO 50%. BUG RATING: 3,2,0
J		HYDREL	4640 18LED WHT30K MVOLT NSP KM MOUNTING IHL GS FINISH	19	LED	SURFACE	FLAG: FLOOD LIGHT, RUGGED SEALED DIE-CAST WITH INTEGRATED GLARE SHIELD. BUG RATING: 1,0,0
K		SPECTRUM LIGHTING	AF0812/COA/FIA-14-35K-DS101/DS102-HM/HMAT	14	LED	SUSPENDED	ADMIN BUILDING: ENTRY CANOPY. MOUNTED AT 10'-0" AFF
L		HYDREL	ASPEN P180CRI-30K-VOLTS-35DEG FLC	11	LED	SURFACE	ADMIN BUILDING ADDRESS SIGN: MOUNTED ON THE UNDERSIDE OF ROOF EVE NEAR THE EDGE, POINTING AT THE CENTER OF THE SIGN. PROVIDE POWER SUPPLY TM277

NOTES:

1. PRIOR TO ORDERING AND INSTALLING FIXTURES, CONFIRM AND COORDINATE THE FOLLOWING WITH THE OWNER/ARCHITECT:
   a. FIXTURE LENGTHS, INCLUDING ARMS AND POLES.
   b. MOUNTING STYLE OF FIXTURE. ORDER TENONS AND BRACKETS AS NECESSARY.
   c. EXACT MOUNTING ELEVATIONS.
   d. EXACT LOCATION OF FIXTURES; ADJUST AS NECESSARY.
   e. COLOR AND FINISHES.
   f. VOLTAGES.
2. ADHERE TO MANUFACTURER'S WIRING INSTRUCTIONS.
3. BASIS OF DESIGN OF CONTROL SYSTEM IS NLIGHT CONTROL.
4. PROVIDE POWER PACKS/RELAYS FOR VAV BOXES. COORDINATE WITH MECHANICAL CONTRACTOR.
5. CONTRACTOR IS RESPONSIBLE FOR LOW VOLTAGE WIRING (0-10 DIMMING).
6. FIXTURES WITH "EM" DESIGNATION TO BE POWERED VIA 90-MINUTE INTEGRATED BACKUP BATTERY.
7. LABEL LIGHT POLES WITH TAGS, REFER TO LIGHT POLE TAG DETAIL.

STATISTICS

DESCRIPTION	SYMBOL	AVG	MIN	MAX/MIN	AVG/MIN	MAX
FUEL CANOPY	+	4.9 fc	2.6 fc	2.9:1	1.9:1	7.6 fc
HAZ-MAT CANOPY	+	13.6 fc	8.5 fc	2.1:1	1.6:1	18.0 fc
POLE RACK STORAGE	+	1.7 fc	0.4 fc	11.8:1	4.3:1	4.7 fc
ROAD WAY	+	1.6 fc	0.2 fc	21.0:1	8.0:1	4.2 fc
SCE BISHOP CENTER SITE	+	1.4 fc	0.1 fc	40.0:1	14.0:1	4.0 fc
SCE BISHOP CENTER SITE STAIR	+	0.6 fc	0.5 fc	1.4:1	1.2:1	0.7 fc
SCE BISHOP SOUTH SITE	+	2.1 fc	0.1 fc	594.0:1	21.0:1	59.4 fc
STORAGE	+	9 fc	8 fc	1.3:1	1.1:1	10 fc
TRUCK CANOPY	+	5.1 fc	2.7 fc	3.0:1	1.9:1	8.1 fc

SALAS O'BRIEN
expect a difference
305 South 11th Street
San Jose, California 95112-2218
408.282.1500 | 408.297.2995 (f)
salasobrien.com

REGISTERED PROFESSIONAL ENGINEER JEFFRY GOSAL No. E18084 ELECTRICAL STATE OF CALIFORNIA
02.26.2021
Date Signed:

PLANS PREPARED BY:
Blair, Church & Flynn
CONSULTING ENGINEERS
451 Clovis Avenue, Suite 200
Clovis, California 93612
Tel (559) 326-1400
Fax (559) 326-1500

	REFERENCE DRAWINGS	REFERENCE DRAWINGS	NO.	REVISIONS	DATE	SAP WO	SUPV	APPROVED	ENGR	CK'D	MADE	P.E.

NO.	REVISIONS	DATE	SAP WO	SUPV	APPROVED	ENGR	CK'D	MADE	P.E.
2	ADDENDUM 1	02-26-2021							
	ADDENDUM A	11-18-2020							

LOCATION: BISHOP, CALIFORNIA

BISHOP SERVICE CENTER
SITE DEVELOPMENT
ELECTRICAL PHOTOMETRIC SITE PLAN
VOLUME 1

SOUTHERN CALIFORNIA EDISON An EDISON INTERNATIONAL Company

SHEET NO. E2.0a
SCALE: AS NOTED
56 OF 64 SHTS.

100% CONSTRUCTION DOCUMENTS (02-26-2021)
SOBE #191223a

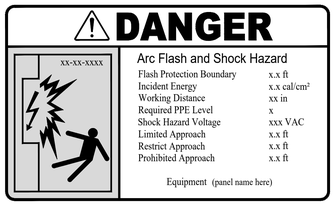

10 ARC FLASH AND SHOCK HAZARD
SCALE: N.T.S.

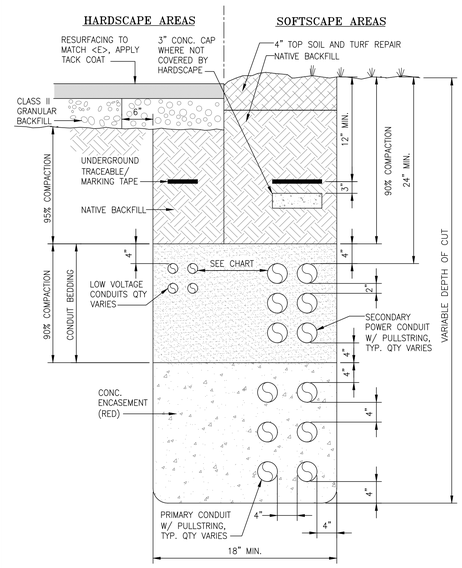

MINIMUM CLEARANCE REQUIREMENTS (INCHES)

	PC	SC	G	TEL	TV	LV	W
PRIMARY CONDUIT (601V-22KV) (PC)	–	6	36	36	36	36	36
SECONDARY POWER CONDUIT (0-600V) (SC)	6	–	12	12	12	12	36
GAS (G)	36	12	–	12	12	12	36
TELEPHONE (TEL)	36	12	12	–	2	2	36
CATV (TV)	36	12	12	2	–	2	36
OTHER LOW VOLTAGE (LV)	36	12	12	2	2	–	36
WET UTILITIES (W)	36	36	36	36	36	36	–

NOTES:
1. UTILITY OWNED AND END-USER CONDUITS AND TRENCH SHALL NOT BE COMBINED.
2. PROVIDE 12" SEPARATION WHEN CROSSING "WET" UTILITIES.

7 CONDUIT TRENCHING 0-600V & 601V-22KV
SCALE: N.T.S.

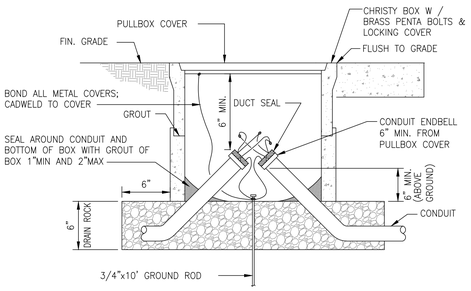

NOTES:
1. PROVIDE 12" WIRE SLACK ABOVE FINISHED GRADE.
2. PROVIDE SPLICE WITH WATERPROOF AND OIL RESISTANT COATING.
3. PROVIDE DUCT SEAL TO INCOMING AND OUT GOING CONDUITS.
4. REFER TO TRENCHING DETAIL FOR DEPTH OF CONDUIT.
5. PROVIDE AND INSTALL (2) PENTA BOLTS FOR ALL PULLBOX COVERS. PROVIDE PENTAHEAD SOCKET TOOL TO OWNER

6 TYPICAL UNDERGROUND PULLBOX
SCALE: N.T.S.

NOTE:
LABEL TO INDICATE LIGHTING CONTROL PANEL NUMBER AND CIRCUIT BREAKER NUMBER.

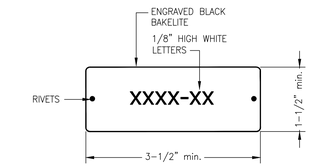

3 TYPICAL LIGHT POLE TAG
SCALE: N.T.S.

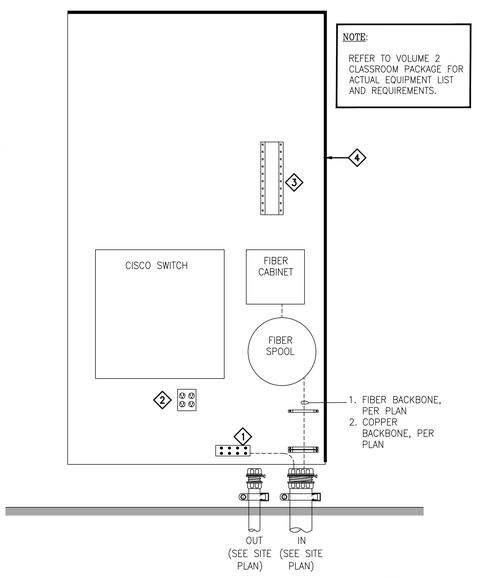

REFERENCE DETAIL NOTES
1. COPPER GROUND BUS BAR.
2. DEDICATED 20 AMP DUPLEX POWER OUTLET.
3. PUNCHDOWN BLOCK.
4. 3/4" FIRE PROOF THICK PLYWOOD.

11 TYPICAL MPOE/MDF EQUIPMENT INSTALLATION
SCALE: N.T.S.

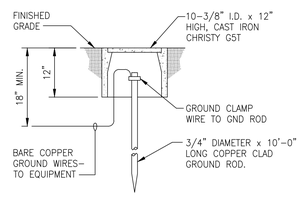

9 GROUNDING WELL
SCALE: N.T.S.

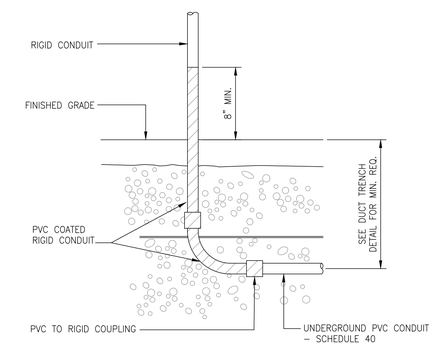

4 CONDUIT TRANSITION
SCALE: N.T.S.

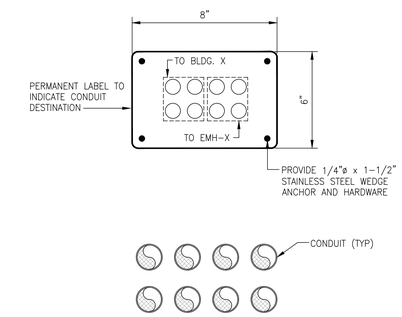

2 TYPICAL CONDUIT NAMEPLATE
SCALE: N.T.S.

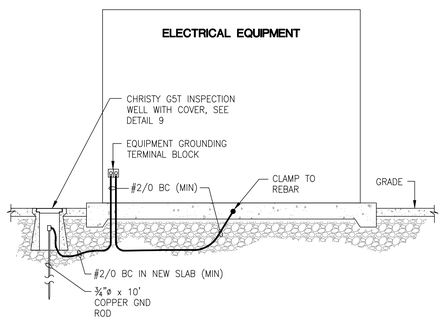

8 EXTERIOR ELECTRICAL EQUIPMENT GROUNDING
SCALE: N.T.S.

NOTES:
1. ALL PULLBOXES IN HARDSCAPE AREAS TO BE H20 LOAD RATED WITH STEEL LID U.O.N.
2. PROVIDE DRAINAGE IN ALL PULLBOXES. FOR SOLID BOTTOM BOXES CORE DRILL (3)2" HOLES IN BOTTOM (CORE DRILL IN SUMP HOLE WHERE AVAILABLE).

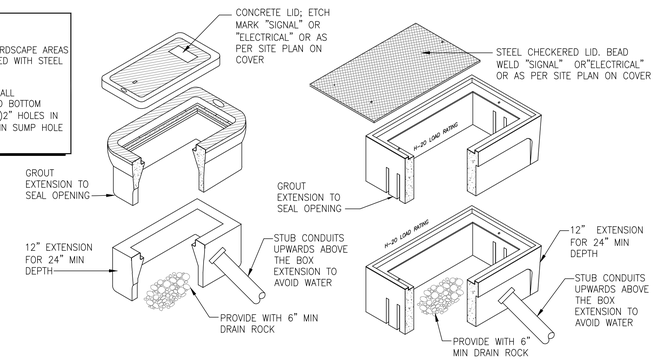

FOR LANDSCAPED AREAS **FOR HARDSCAPED AREAS**

5 PULLBOX DETAIL
SCALE: N.T.S.

SALASO'BRIEN
expect a difference
305 South 11th Street
San Jose, California 95112-2218
408.282.1500 | 408.297.2995 (f)
salasobrien.com

REGISTERED PROFESSIONAL ENGINEER — JEFFRY GOSAT — No. E18064 — ELECTRICAL — STATE OF CALIFORNIA
02.26.2021
Date Signed:

PLANS PREPARED BY:
Blair, Church & Flynn
CONSULTING ENGINEERS
401 Clovis Avenue, Suite 200
Clovis, California 93612
Tel (559) 326-5400
Fax (559) 326-5500

REFERENCE DRAWINGS	REFERENCE DRAWINGS	NO.	REVISIONS	DATE	SAP WO	SUPV	APPROVED	ENGR	CK'D	MADE	P.E.

NO.	REVISIONS	DATE	SAP WO	SUPV	APPROVED	ENGR	CK'D	MADE	P.E.
	ADDENDUM 1	02-26-2021							
	ADDENDUM A	11-18-2020							

LOCATION: BISHOP, CALIFORNIA

BISHOP SERVICE CENTER
SITE DEVELOPMENT
ELECTRICAL DETAILS

VOLUME 1

SHEET NO. E5.1a

SCALE: AS NOTED

57 OF 64 SHTS.

SOUTHERN CALIFORNIA EDISON
An EDISON INTERNATIONAL Company

100% CONSTRUCTION DOCUMENTS (02-26-2021)

SOBE #191223a

Drawing: K:\drawings\Blair Church & Flynn\191223 SCE Bishop Service Center\191223a Site Development\191223E5.1a.dwg, Layout1 - BKF.ctb
Plot by: ramirezg Mar 05, 2021 11:30am

SOUTHERN CALIFORNIA EDISON
2012 – 5 SIZE

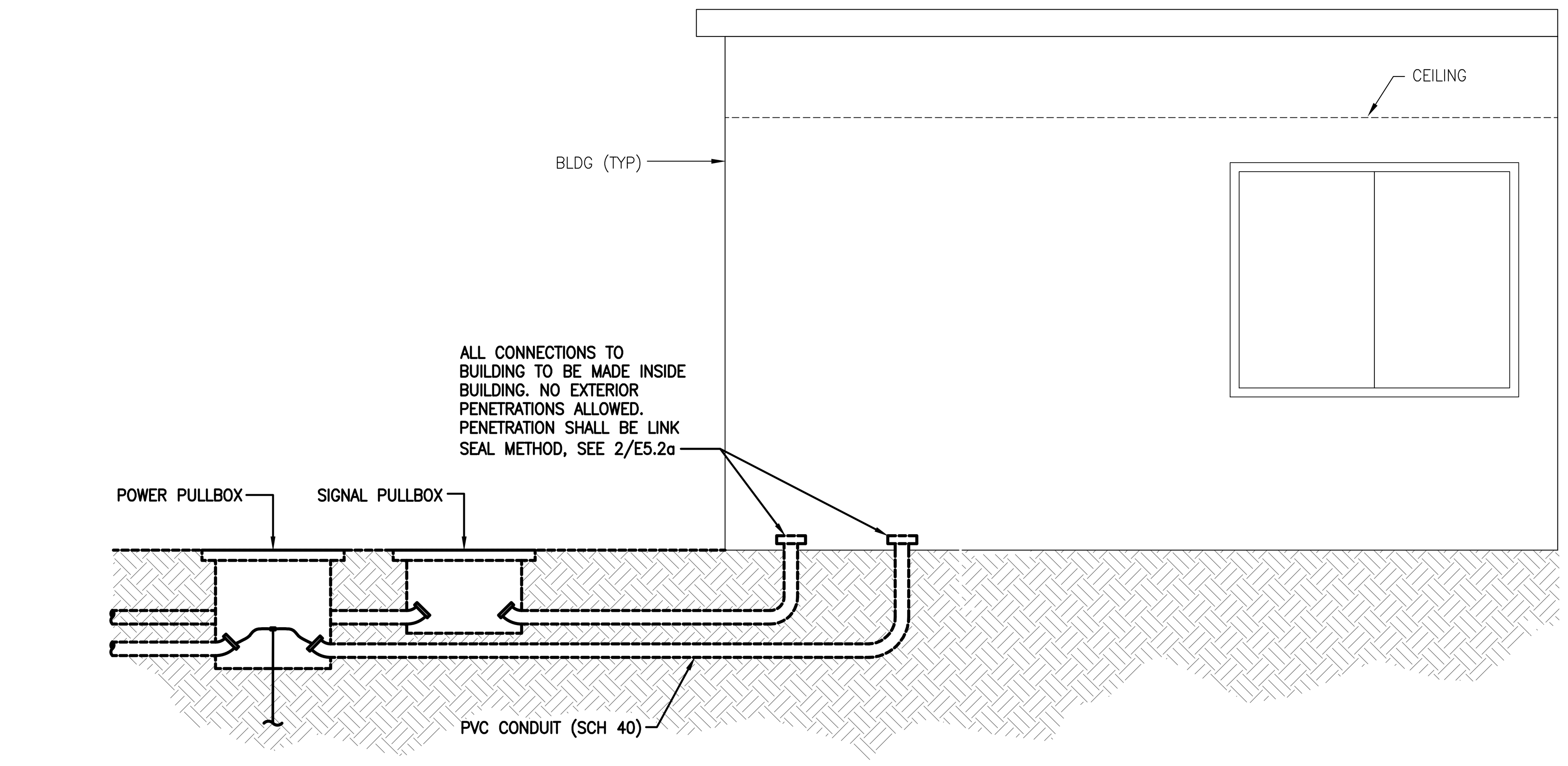

8 TYPICAL CONDUIT BUILDING CONNECTION
SCALE: N.T.S.

PARKING LIGHT PIER DEPTH SCHEDULE				
		FOOTING/PIER DEPTH		
POLE HEIGHT	FOOTING DIAMETER	LANDSCAPE	CONC. WALK	FIXTURE WEIGHT
30'	24"	9'-0"	8'-0"	LESS THAN 40 LBS
25'	24"	7'-0"	6'-0"	
20'	24"	7'-0"	6'-0"	

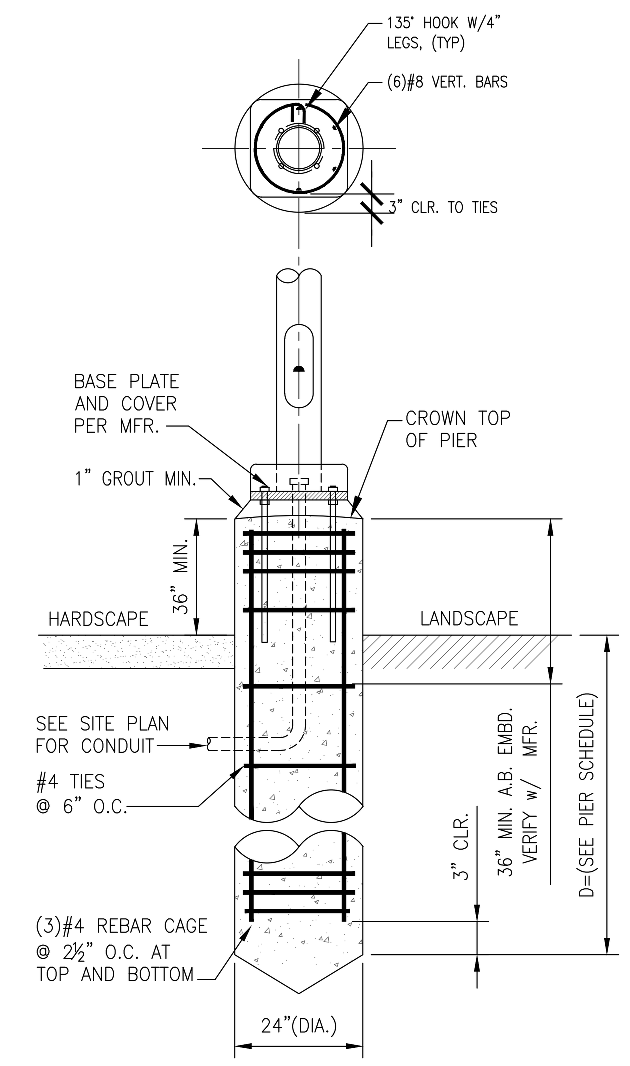

NOTES:

1. NEW MATERIALS SHALL BE AS FOLLOWS:
   CONCRETE: NORMAL WEIGHT CONCRETE, 28-DAY COMPR. STRENGTH CONCRETE OF 3,000 PSI MIN. MAX SLUMP OF 4".
   CONCRETE REINFORCING: DEFORMED BAR, ASTM A615, GRADE 40 FOR #4 & SMALLER, GRADE 60 FOR #5 & LARGER
2. SPECIAL INSPECTIONS:
   PROVIDE CONTINUOUS INSPECTION FOR THE FOLLOWING: CONCRETE: EXCAVATION, FINAL PLACEMENT OF REBAR, TAKING OF TEST SPECIMENS.
2. TESTING:
   * CONCRETE: CAST (4) CYLINDERS, TEST AT 7, 14 & 28 DAYS (HOLD EXTRA FOR 60 DAYS). TEST SLUMP.

5 TYPICAL FOUNDATION POLE (PARKING LIGHT)
SCALE: N.T.S.

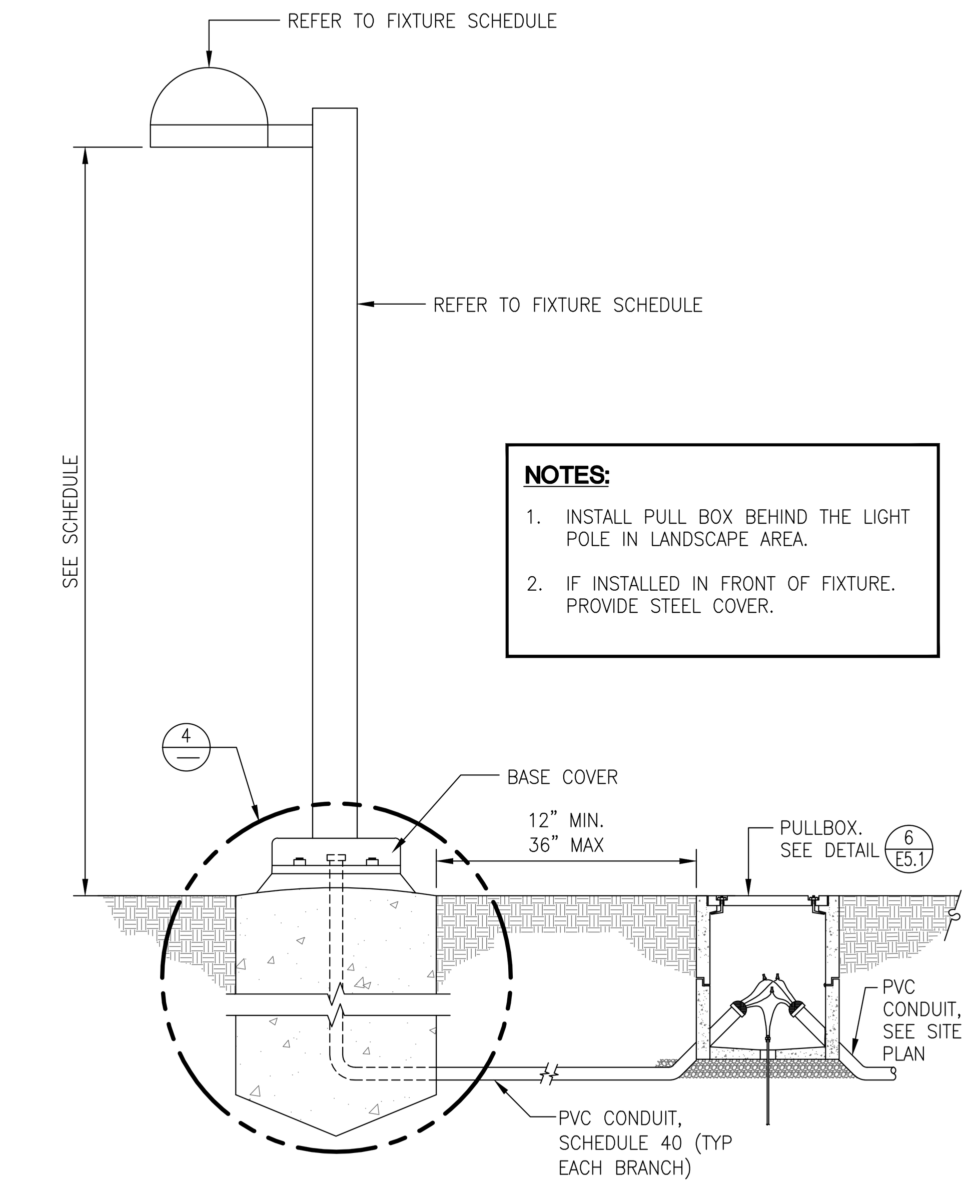

NOTES:

1. INSTALL PULL BOX BEHIND THE LIGHT POLE IN LANDSCAPE AREA.
2. IF INSTALLED IN FRONT OF FIXTURE. PROVIDE STEEL COVER.

3 TYPICAL LIGHT POLE ELEVATION (AREA LIGHT)
SCALE: N.T.S.

NOTE:
LINK-SEAL: MODULAR SEALS WITH CAST OR CORE DRILLED WALL OPENING MANUFACTURED BY PIPELINE SEAL & INSULATOR, INC.

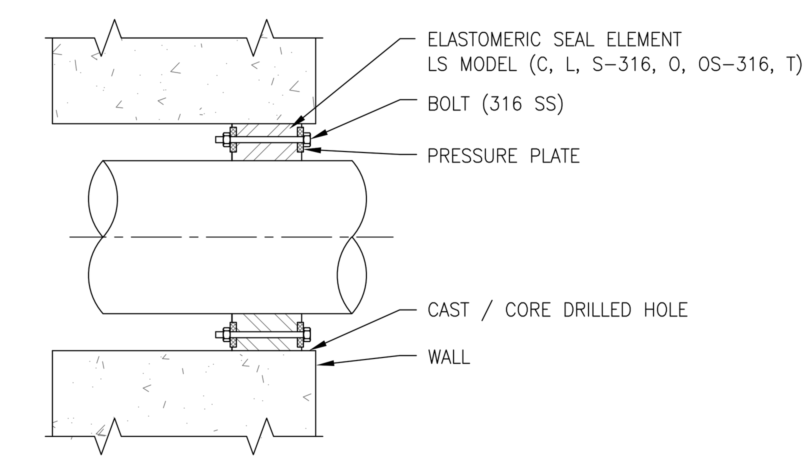

LINK-SEAL MODEL	BOLT/NUT MAT'L	PRESSURE PLATE MAT'L
CS-316	316 STAINLESS STEEL	REINFORCED NYLON POLYMER

SLEEVE MODEL	DESCRIPTION	MATERIAL
CS	CENTURY-LINE SLEEVE	HDPE
WS	STEEL WALL SLEEVE	STEEL

2 CONDUIT PENETRATION DETAIL
SCALE: N.T.S.

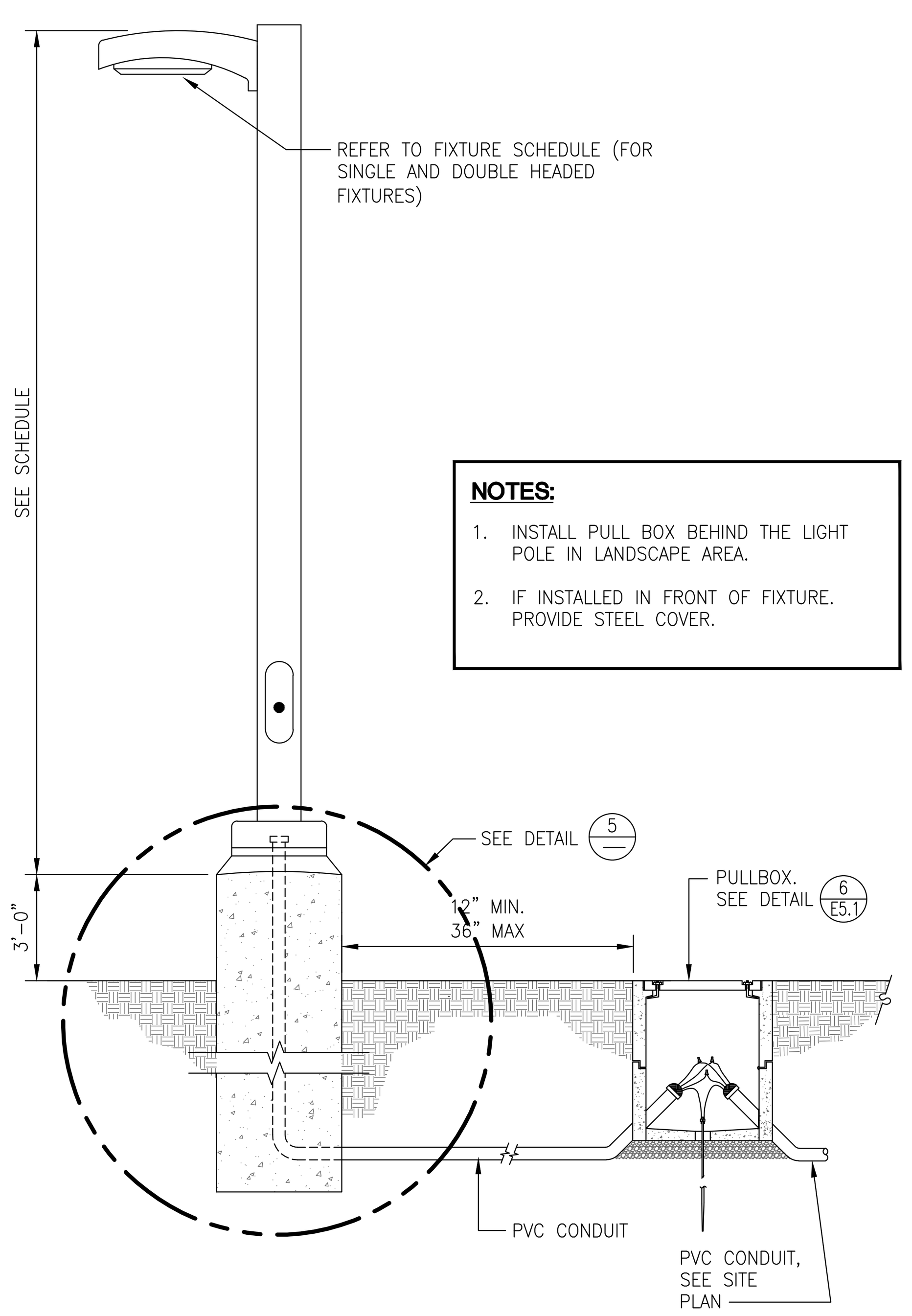

NOTES:

1. INSTALL PULL BOX BEHIND THE LIGHT POLE IN LANDSCAPE AREA.
2. IF INSTALLED IN FRONT OF FIXTURE. PROVIDE STEEL COVER.

7 TYPICAL POLE ELEVATION DETAIL (PARKING LIGHT)
SCALE: N.T.S.

NOTES:

1. MAXIMUM SPACING FOR GUARD POST SHALL NOT EXCEED 3'-0" O.C.
2. INSTALL GUARD POST PER MOST RECENT VERSIONS OF CALIFORNIA FIRE CODE SECTION 312 - VEHICLE IMPACT PROTECTION.
3. NO HOOKS/ANGLES ALLOWED ON REMOVABLE BOLLARDS
4. SLEEVE TO BE FLUSH WITH GRADE DO NOT GRIND CONCRETE TO LEVEL SURFACES.
5. APPROXIMATE WEIGHT OF POST IS 90 LBS.

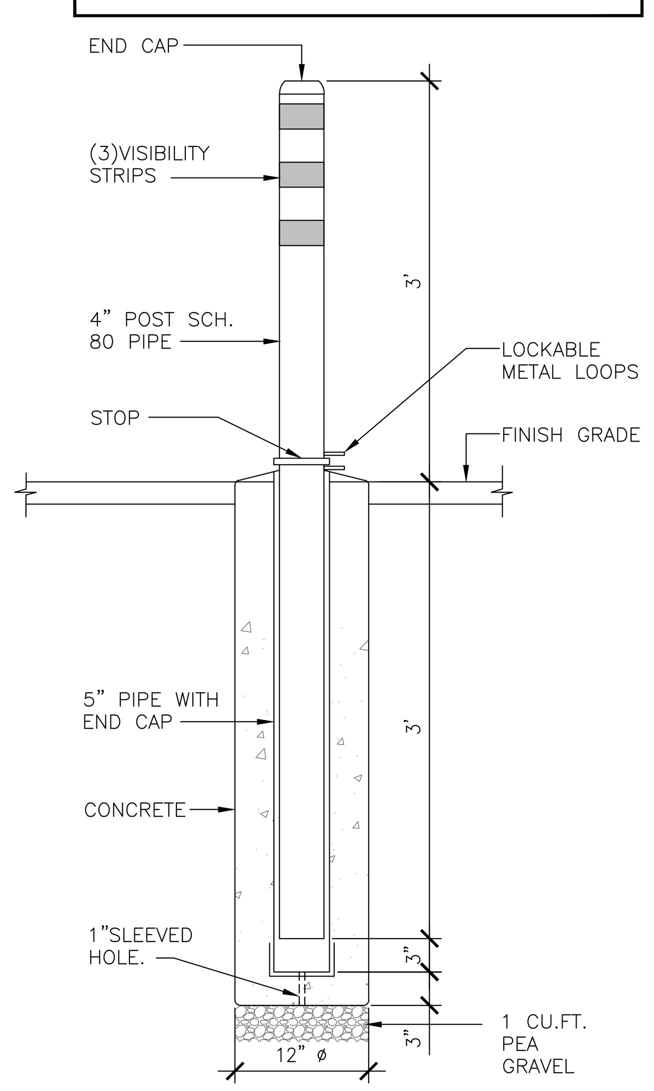

6 REMOVABLE BOLLARD

AREA LIGHT PIER DEPTH SCHEDULE				
		FOOTING/PIER DEPTH		
POLE HEIGHT	FOOTING DIAMETER	LANDSCAPE	CONC. WALK	FIXTURE WEIGHT
30'	24"	9'-0"	8'-0"	LESS THAN 40 LBS
25'	24"	7'-0"	6'-0"	
20'	24"	7'-0"	6'-0"	

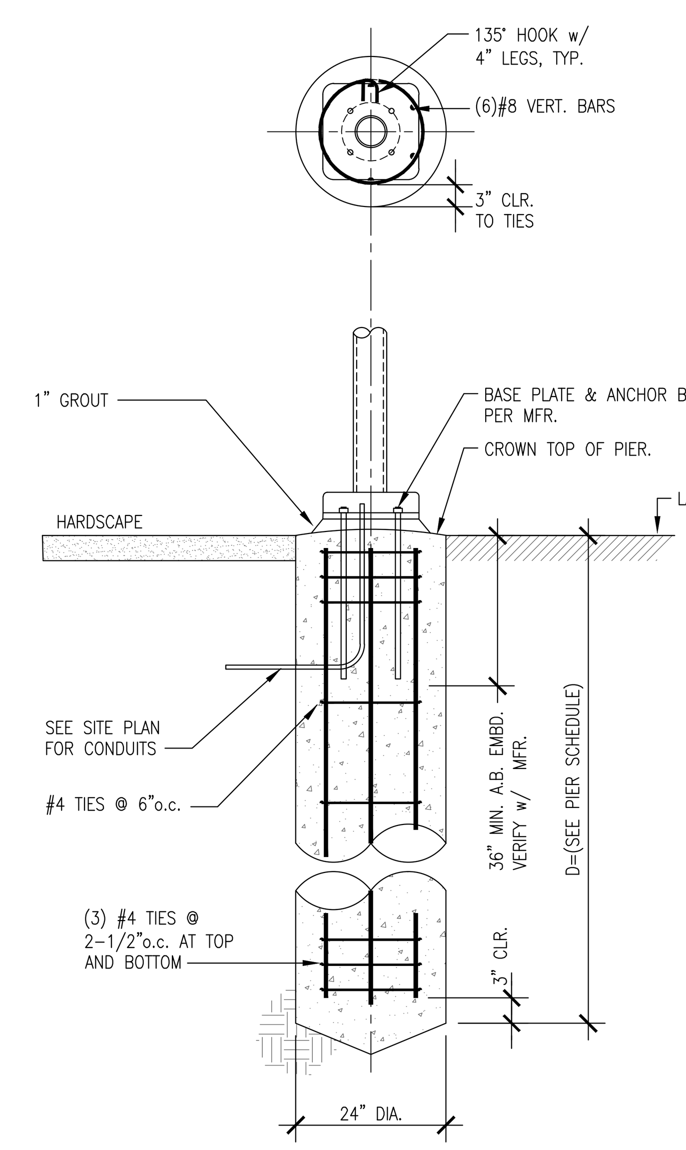

NOTES:

1. NEW MATERIALS SHALL BE AS FOLLOWS:
   CONCRETE: NORMAL WEIGHT CONCRETE, 28-DAY COMPR. STRENGTH CONCRETE OF 3,000 PSI MIN. MAX SLUMP OF 4".
   CONCRETE REINFORCING: DEFORMED BAR, ASTM A615, GRADE 40 FOR #4 & SMALLER, GRADE 60 FOR #5 & LARGER
2. SPECIAL INSPECTIONS:
   PROVIDE CONTINUOUS INSPECTION FOR THE FOLLOWING: CONCRETE: EXCAVATION, FINAL PLACEMENT OF REBAR, TAKING OF TEST SPECIMENS.
3. TESTING:
   * CONCRETE: CAST (4) CYLINDERS, TEST AT 7, 14 & 28 DAYS (HOLD EXTRA FOR 60 DAYS). TEST SLUMP.

4 TYPICAL FOUNDATION POLE (AREA LIGHT)
SCALE: N.T.S.

SALASO'BRIEN
|expect a difference|
305 South 11th Street
San Jose, California 95112-2218
408.282.1500 | 408.297.2995 (f)
salasobrien.com

REGISTERED PROFESSIONAL ENGINEER JEFFRY GOSAL No. E19084 ELECTRICAL STATE OF CALIFORNIA
02.26.2021
Date Signed:

PLANS PREPARED BY:
Blair, Church & Flynn
CONSULTING ENGINEERS
451 Clovis Avenue, Suite 200
Clovis, California 93612
Tel (559) 326-1400
Fax (559) 326-1500

NO.	REVISIONS	DATE	SAP WO	SUPV	APPROVED	ENGR	CK'D	MADE	P.E.
	ADDENDUM 1	02-26-2021							
	ADDENDUM A	11-18-2020							

REFERENCE DRAWINGS | REFERENCE DRAWINGS

LOCATION: BISHOP, CALIFORNIA

BISHOP SERVICE CENTER
SITE DEVELOPMENT
ELECTRICAL DETAILS
VOLUME 1

SHEET NO.
E5.2a

SCALE: AS NOTED
58 OF 64 SHTS.

SOUTHERN CALIFORNIA EDISON An EDISON INTERNATIONAL Company

Drawing: K:\drawings\Blair Church & Flynn\191223 SCE Bishop Service Center\191223a Site Development\191223E5.2a.dwg; Layout1 - BCF.ctb
Plot by: minh.ong Mar 05, 2021 - 11:31am

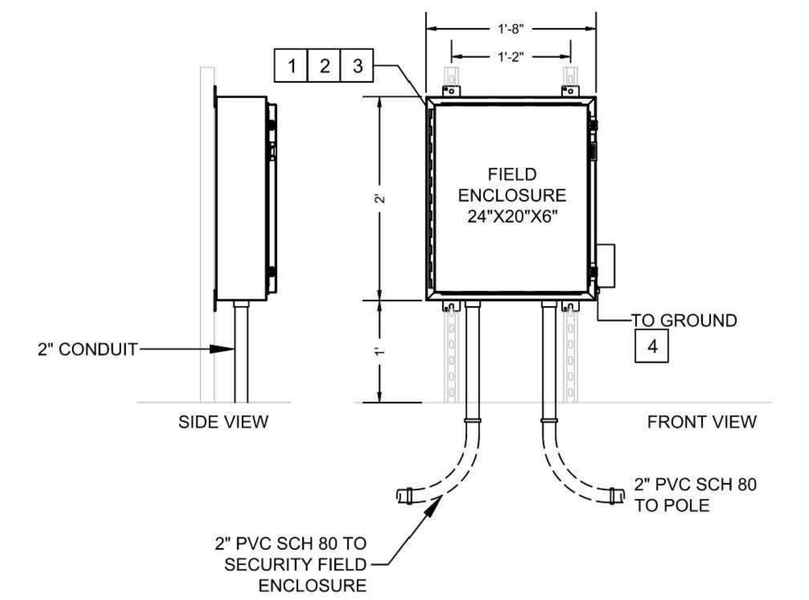

KEY NOTES

1. MOUNT FIELD ENCLOSURE ON AVAILABLE SPACE.
2. SEE SHEET DETAIL 2 – 5 FOR ENCLOSURE PANEL DETAIL.
3. BOND ENCLOSURE TO GROUND THROUGH SCE PROVIDED CONDUCTOR.
4. EXISTING GROUNDING GRID.

8 CAMERA FIELD ENCLOSURE DETAIL
SCALE: N.T.S.

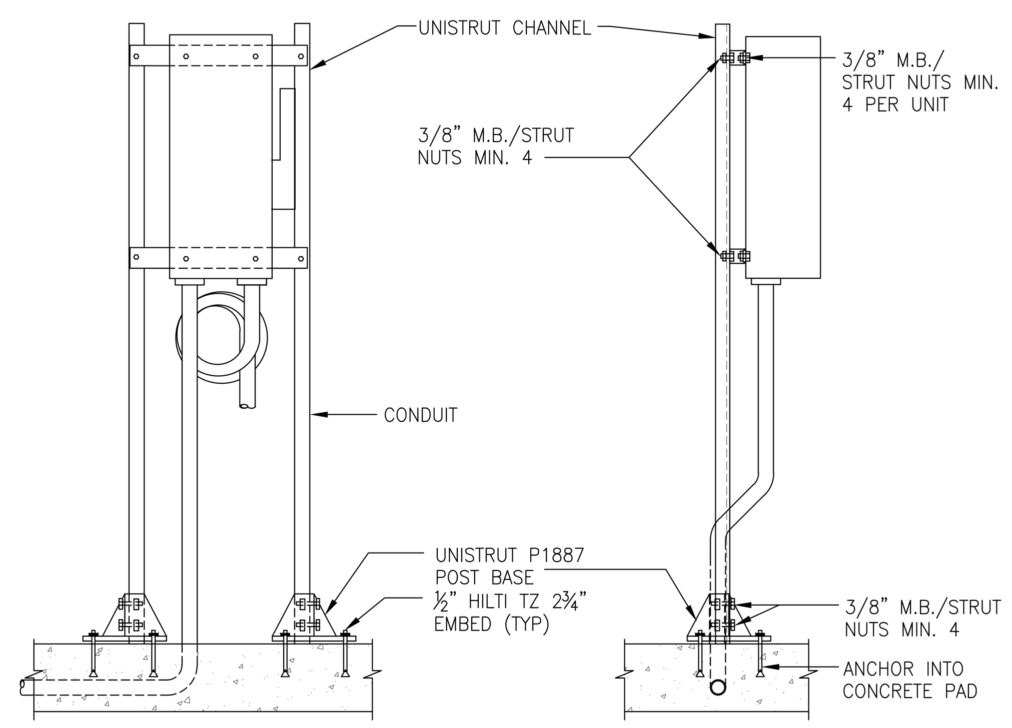

7 DISCONNECT MOUNTING
SCALE: N.T.S.

NOTE:

DETAIL APPLIES TO:

- SWITCHBOARD 'DPB-1H': ~ 4,300 LBS.
- SWITCHBOARD 'DPB-2H': ~ 5,350 LBS.
- SWITCHBOARD 'EMSB': ~ 4,000 LBS.
- SWITCHBOARD 'MSB': ~ 3,000 LBS.

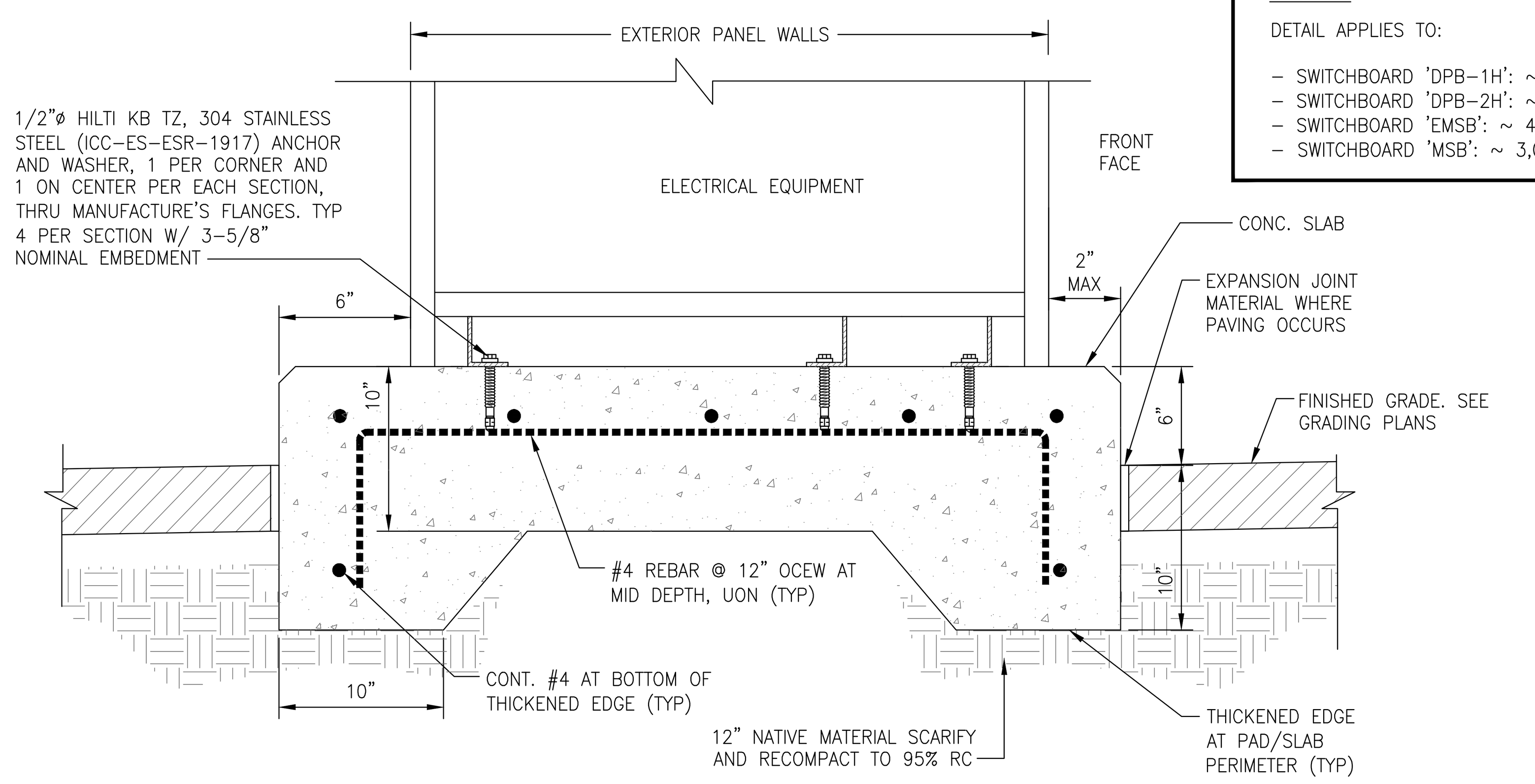

3 EQUIPMENT MOUNTING ON HOUSEKEEPING PAD
SCALE: N.T.S.

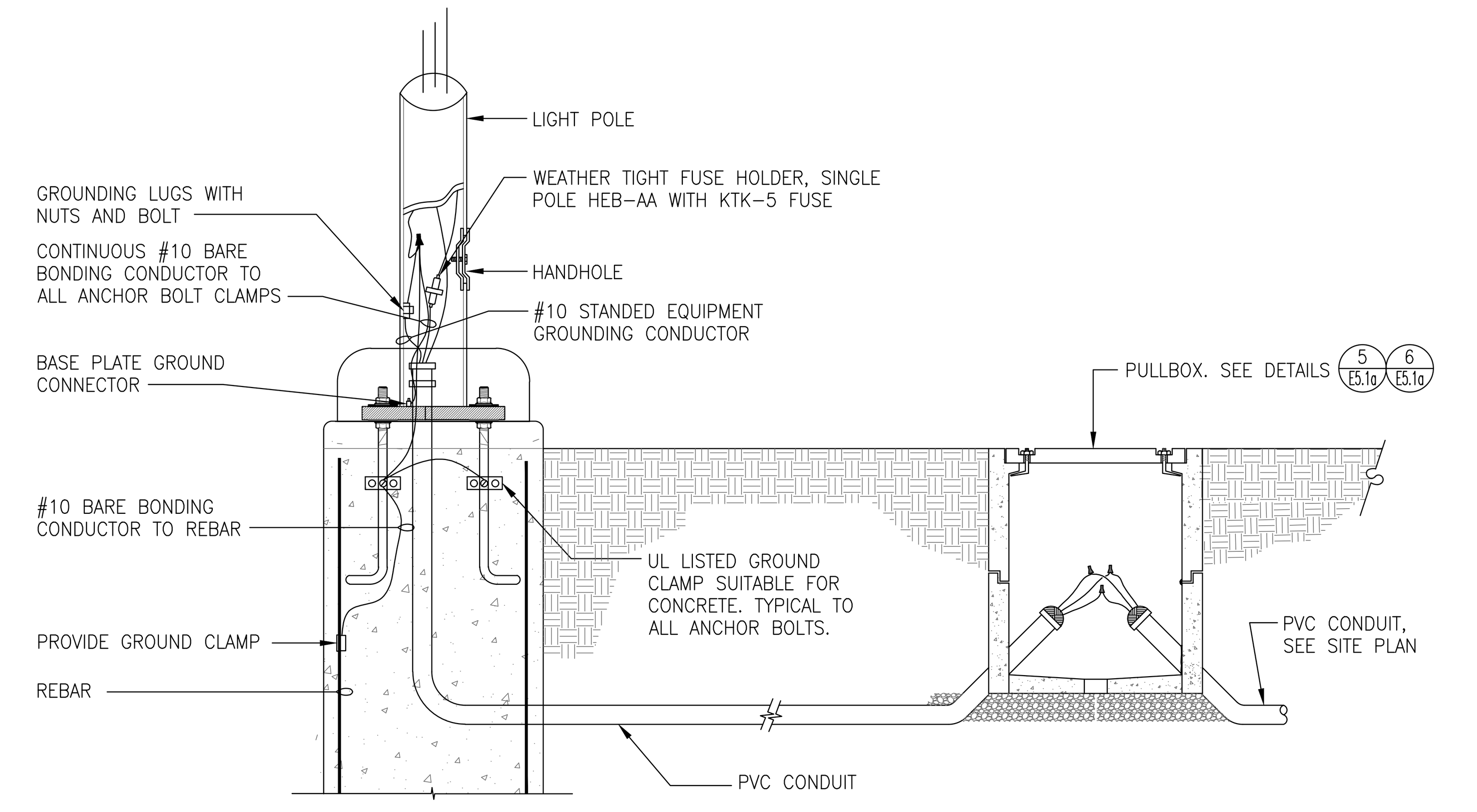

2 TYPICAL LIGHT POLE BONDING, GROUNDING & WIRING
SCALE: N.T.S.

EDISON SOUTHERN CALIFORNIA — An EDISON INTERNATIONAL® Company — **Underground Structures Standards**

HP 225 Pull Box 3' x 5' Precast Concrete

Scope HP 225.1 Pull Box 3' x 5' Precast Concrete

Figure HP 225–1: Pull Box 3' x 5' Precast Concrete

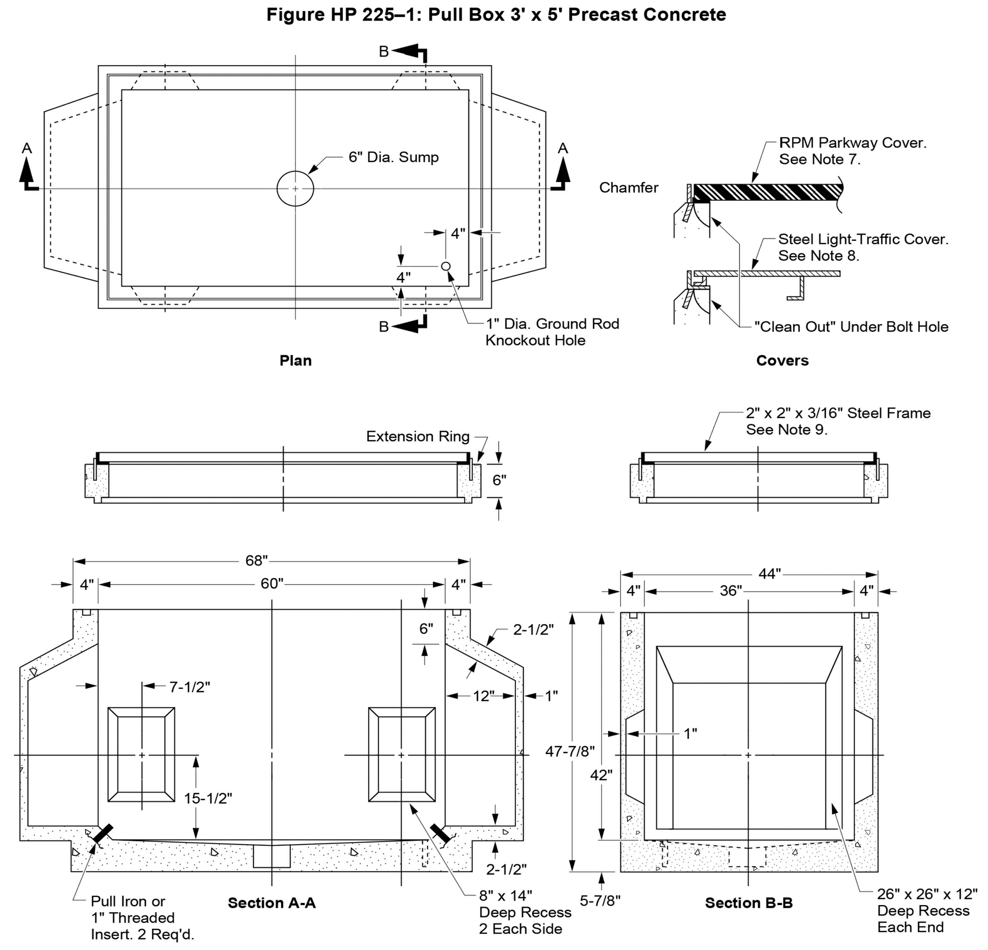

Note(s):
1. Reinforcement: H20-S bridge loading.

Approved by:	Pull Box 3' x 5' Precast Concrete	HP 225
Effective Date: 01-26-2007	What's Changed?	Sheet 1 of 2 — UGS

► SCE Public ◄

6 SCE PULLBOX DETAIL
SCALE: N.T.S.

EDISON SOUTHERN CALIFORNIA — An EDISON INTERNATIONAL® Company — **Underground Structures Standards**

CD 120 Conduit Bank Requirements

Scope CD 120.1 Conduit Bank Requirements

Figure CD 120–1: Typical Conduit Bank Sections (Mainline and Commercial/Industrial)

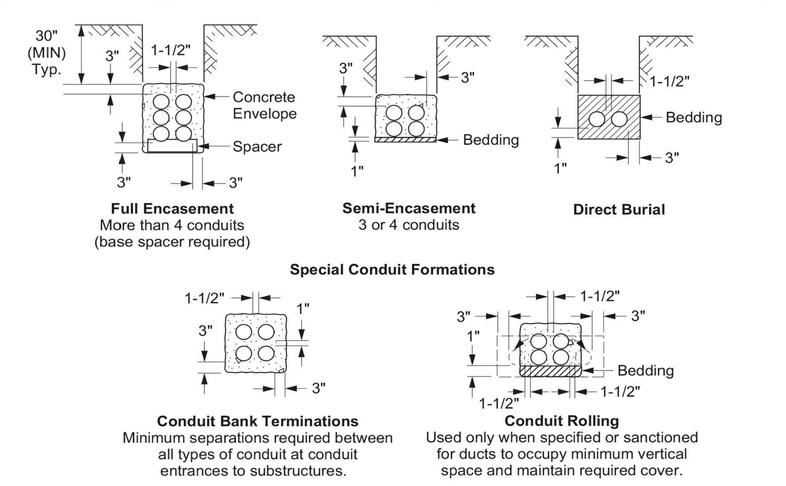

Note(s):
1. Spacing and concrete coverage as shown is minimum.
2. Spacers, when required, will be as recommended by the conduit manufacturer and approved by the company and will be placed at the intervals shown in Table CD 120–1 (Sheet 1). Vertical spacers and base spacers will be manufactured from rigid noncompressable-type materials. Use temporary means to maintain horizontal conduit spacing at these intervals until backfill bedding or encasement is placed.

Table CD 120–1: Horizontal Conduit Spacing Intervals

Conduit Size	2"	3"	3-1/2"	4"	5"	6"
Spacing with Encasement	10'	10'		10'		
Spacing with Nonencasement	10'	8'		6'		

3. Base spacers are required on all banks of more than four conduits.
4. The conduit will be of an approved make and manufacture as set forth in standards CD 115.
5. Types:
   a. "EB" (Type I) for encased and semi-cased installations
   b. "DB" (Type II) for direct burial
   c. "Sch. 40" Rigid PVC for inside bore casings
6. For general conduit bank, concrete, and trenching requirements, see CD 100.
7. Install bare copper neutral wire only when specified on working drawing. For mainline applications (including 4-wire taplines) when the neutral is present on an overhead structure that feeds a primary riser, the neutral shall be continuous to the first underground structure. A bare copper neutral wire, as specified on the working drawing, shall be placed, and fully encased in concrete, at the lower region of the duct bank, preferably in-between conduits.
8. Concrete encasement will be kept uniform. Excessive amounts of concrete will be avoided.
9. Bedding will be in accordance with CD 100.

Approved by:	Conduit Bank Requirements	CD 120
Effective Date: 04-29-2016	What's Changed?	Sheet 1 of 3 — UGS

► SCE Public ◄

5 SCE TRENCH DETAIL
SCALE: N.T.S.

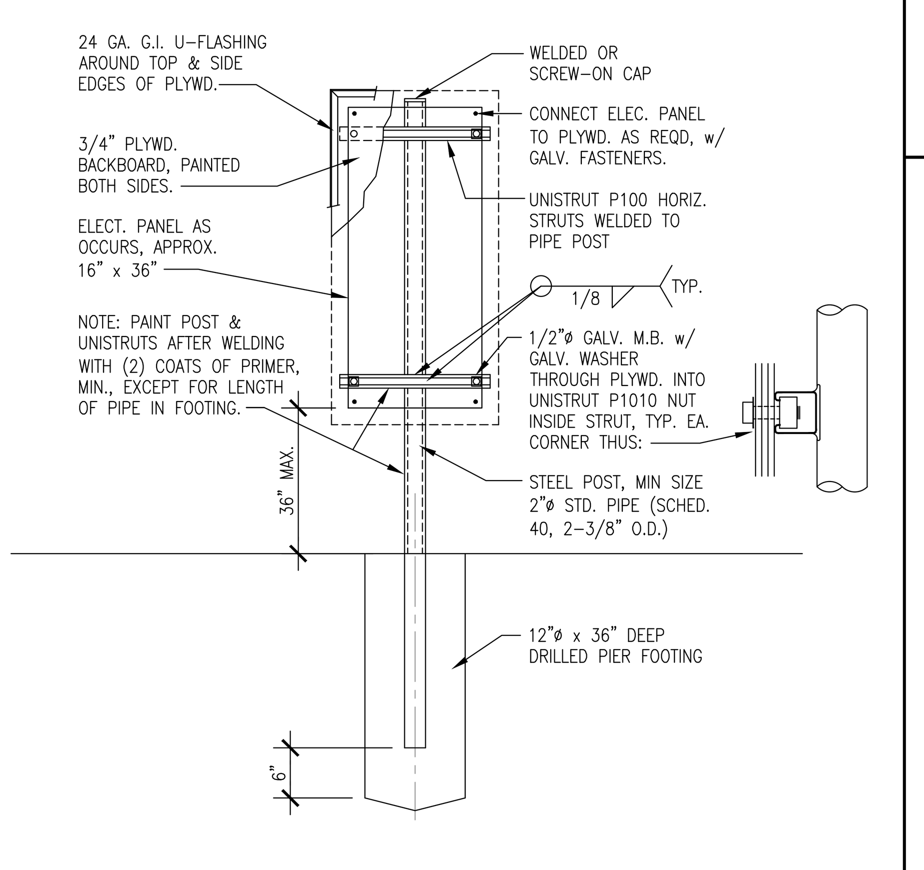

4 PANELBOARD MOUNTED ON POLE
SCALE: N.T.S.

SALASO'BRIEN
|expect a difference|
305 South 11th Street
San Jose, California 95112-2218
408.282.1500 | 408.297.2995 (f)
salasobrien.com

REGISTERED PROFESSIONAL ENGINEER — JEFFRY GOSAL — No. E16084 — ELECTRICAL — STATE OF CALIFORNIA
11.16.2021
Date Signed:

PLANS PREPARED BY:
Blair, Church & Flynn
CONSULTING ENGINEERS
451 Clovis Avenue, Suite 200
Clovis, California 93612
Tel (559) 326-1400
Fax (559) 326-1500

NO.	REVISIONS	DATE
3	ADDENDUM 2	12-01-2021
	ADDENDUM 1	02-26-2021
	ADDENDUM A	11-18-2020

REFERENCE DRAWINGS | REFERENCE DRAWINGS | NO. | REVISIONS | DATE | SAP WO | SUPV | APPROVED | ENGR | CK'D | MADE | P.E. | NO. | REVISIONS | DATE | SAP WO | SUPV | APPROVED | ENGR | CK'D | MADE | P.E.

LOCATION: BISHOP, CALIFORNIA

BISHOP SERVICE CENTER
SITE DEVELOPMENT
ELECTRICAL DETAILS

VOLUME 1

SOUTHERN CALIFORNIA EDISON — An EDISON INTERNATIONAL Company

SHEET NO. E5.3a

SCALE: AS NOTED

59 OF 64 SHTS.

100% CONSTRUCTION DOCUMENTS (02-26-2021)

SOBE #191223a

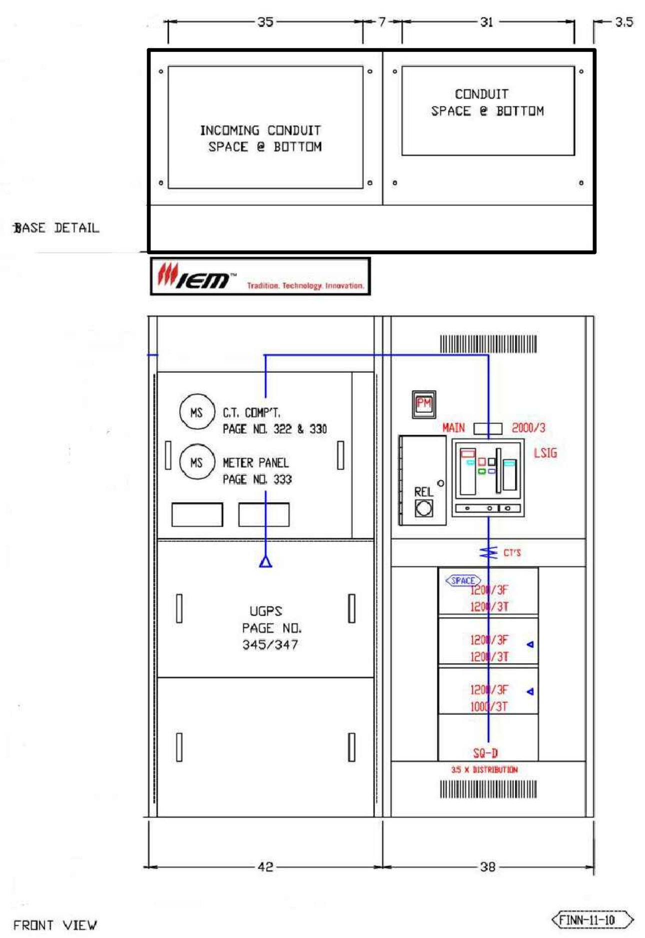

MAIN SWBD 'MSB' - 480/277V - 3Ph 4W - 2000 AMP COPPER - 65KAIC - NEMA 1 - ANSI #61

MAIN SWITCHBOARD 'MSB'

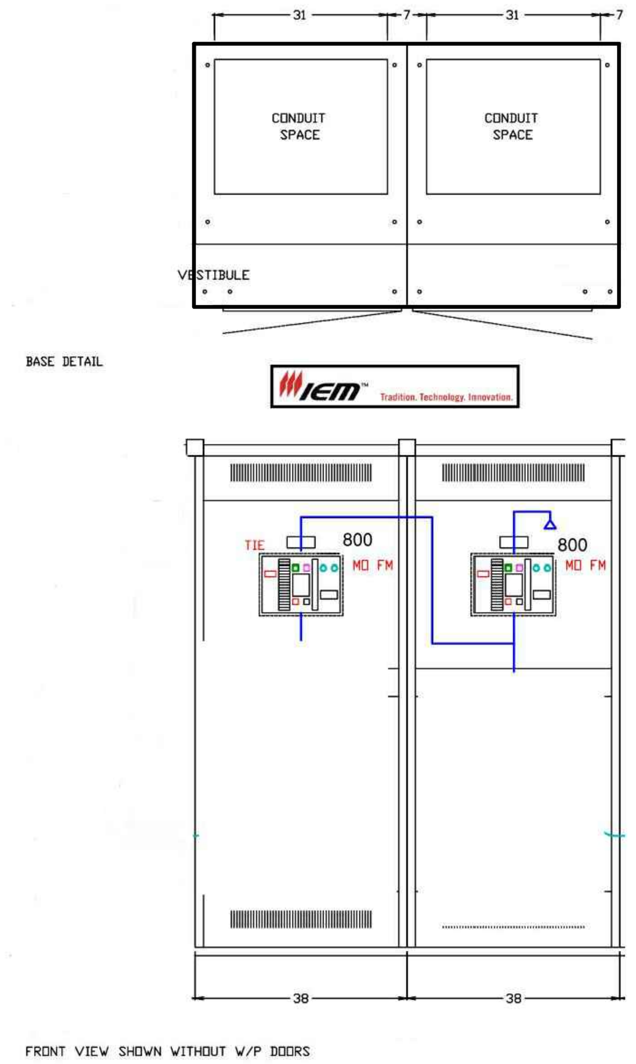

EMERGENCY SWBD 'EMSB' - 480/277V - 3PH 4W - 1600 AMP - NEMA 3R

FINISH ANSI #61 POWDER COATED LT GRAY

MAIN SWITCHBOARD 'EMSB'

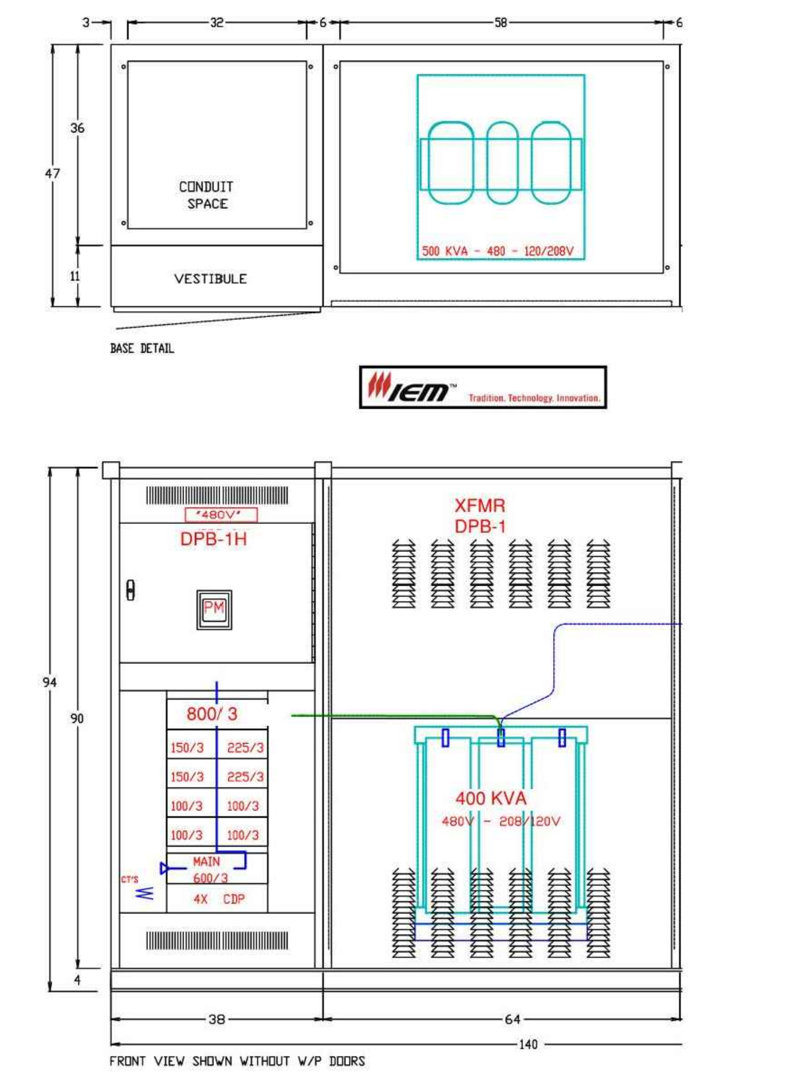

INTERGRATED SWBD - 500 KVA SWBD - 480/277V-120/208V - 3PH 4W - 600-1200 AMP - NEMA 3R

FINISH ANSI #61 POWDER COATED LT GRAY

MAIN SWITCHBOARD 'DPB-1H'

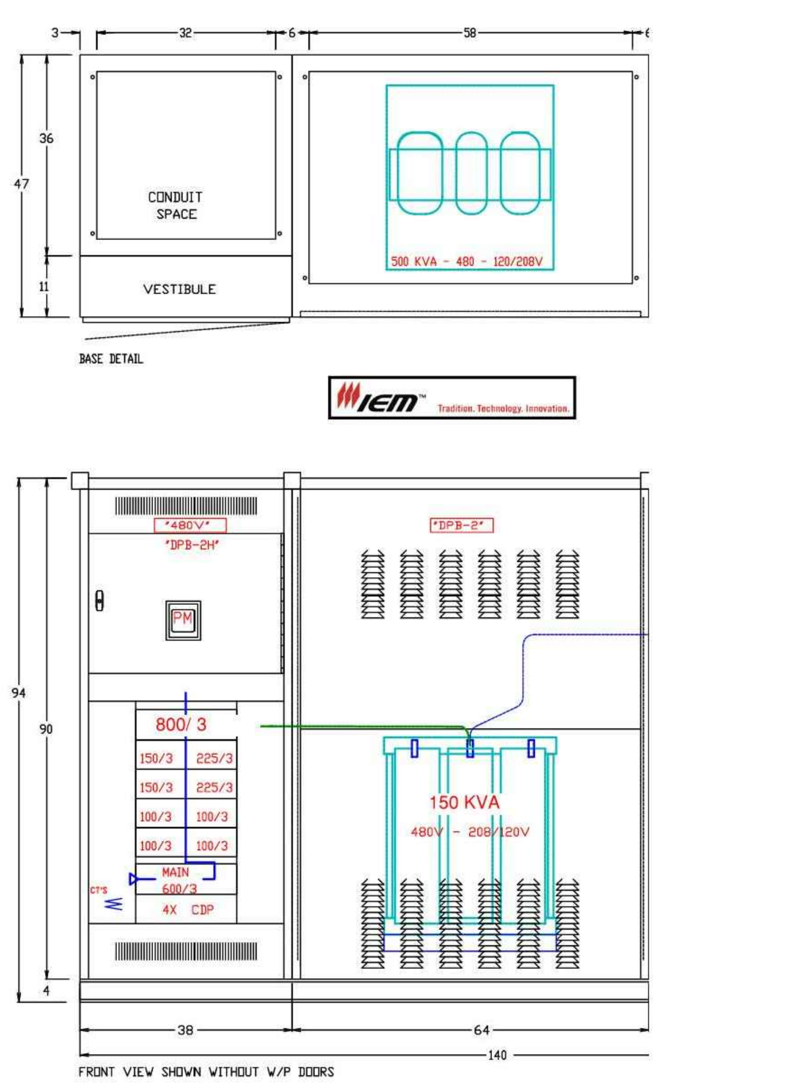

INTERGRATED SWBD - 500 KVA SWBD - 480/277V-120/208V - 3PH 4W - 600-1200 AMP - NEMA 3R

FINISH ANSI #61 POWDER COATED LT GRAY

MAIN SWITCHBOARD 'EDPB-1H'

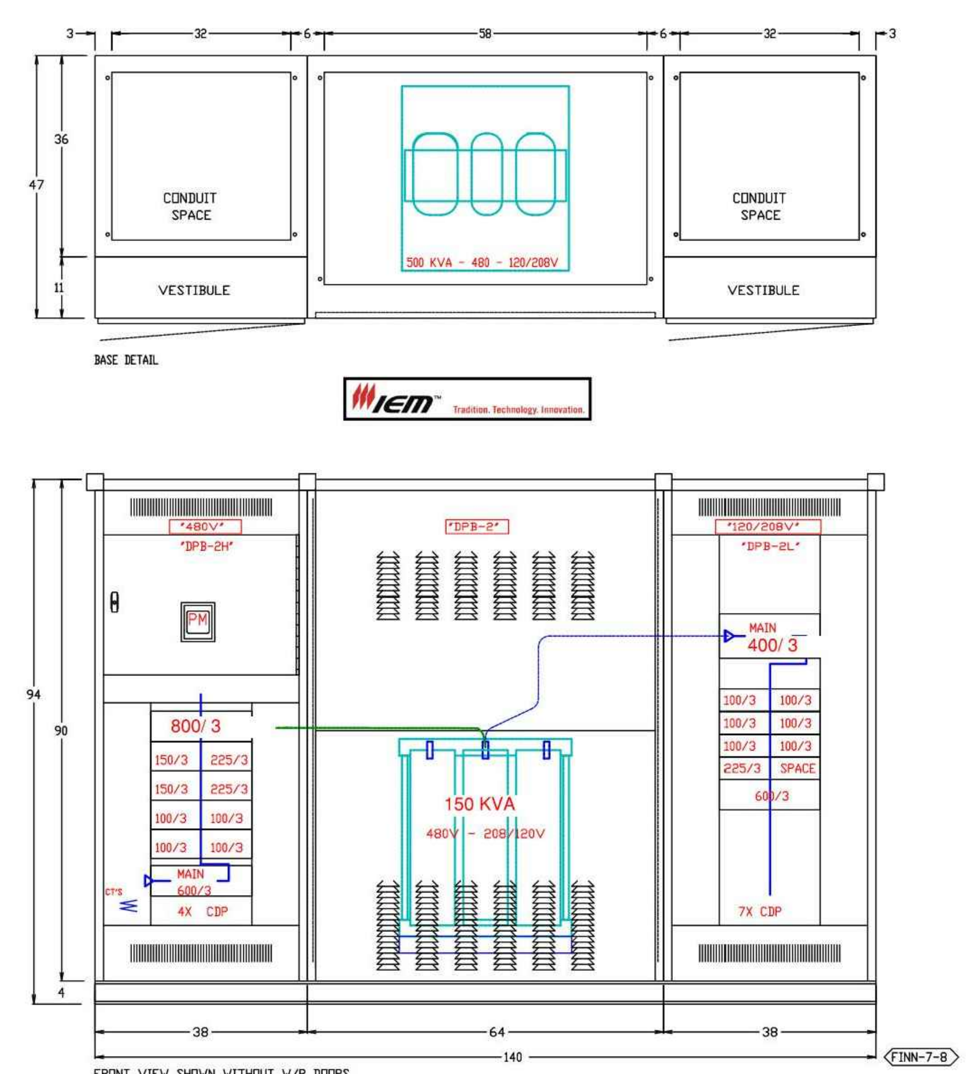

INTERGRATED SWBD - 500 KVA SWBD - 480/277V-120/208V - 3PH 4W - 600-1200 AMP - NEMA 3R

FINISH ANSI #61 POWDER COATED LT GRAY

MAIN SWITCHBOARD 'DPB-2H AND DPB-2L'

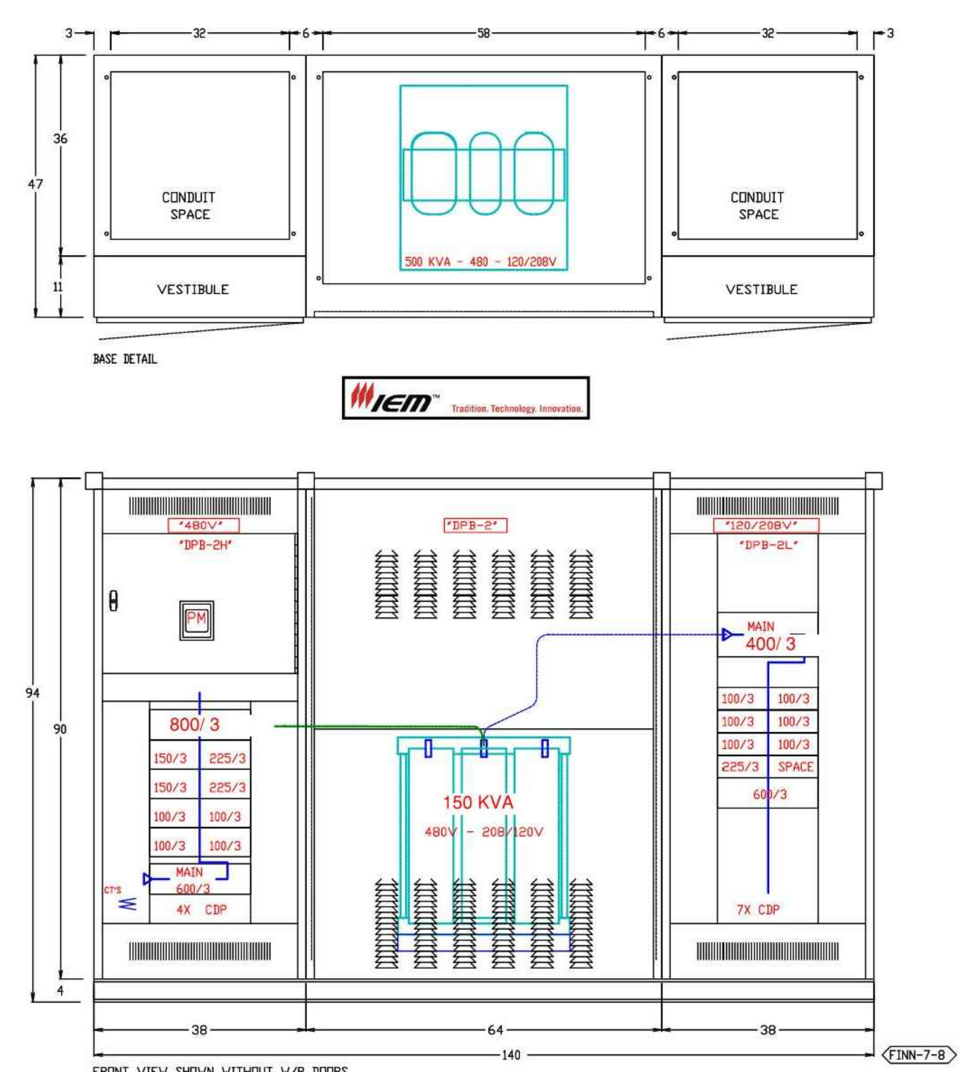

INTERGRATED SWBD - 500 KVA SWBD - 480/277V-120/208V - 3PH 4W - 600-1200 AMP - NEMA 3R

FINISH ANSI #61 POWDER COATED LT GRAY

MAIN SWITCHBOARD 'EDPB-2H AND EDPB-2L'

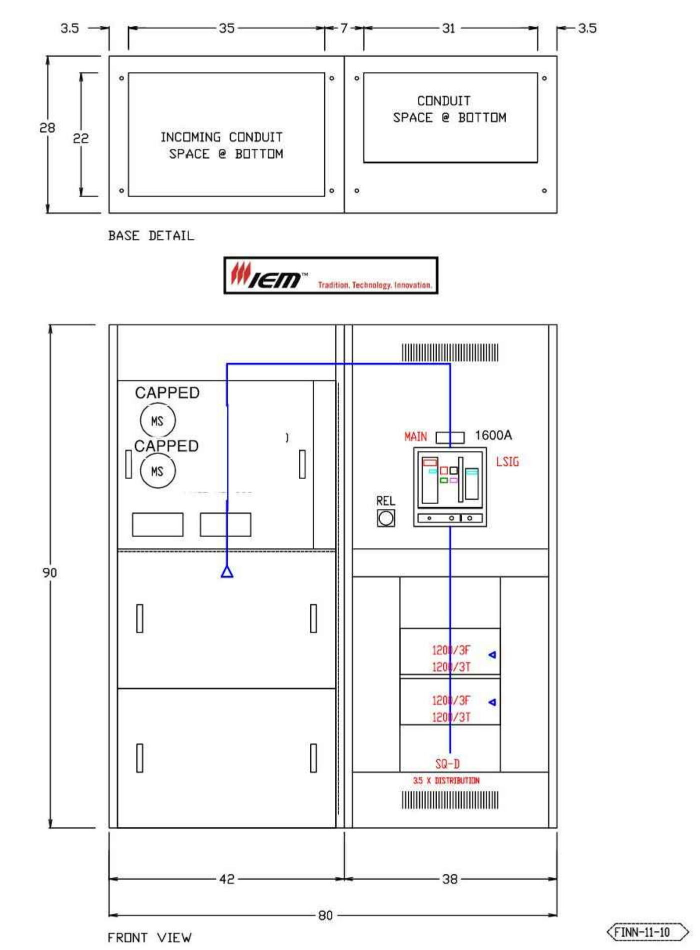

MAIN SWBD 'MSB' - 480/277V - 3Ph 4W - 2000 AMP COPPER - 65KAIC - NEMA 1 - ANSI #61

<E>MAIN SWITCHBOARD 'DPB-1L'

1 EQUIPMENT ELEVATIONS

SCALE: N.T.S.

FOR REFERENCE ONLY

NO.	REVISIONS	DATE	SAP WO	SUPV	APPROVED	ENGR	CK'D	MADE	P.E.
3	ADDENDUM 2	12-01-2021							
	ADDENDUM 1	02-26-2021							
	ADDENDUM A	11-18-2020							

REFERENCE DRAWINGS | REFERENCE DRAWINGS

SALASO'BRIEN
|expect a difference|
305 South 11th Street
San Jose, California 95112-2218
408.282.1500 | 408.297.2995 (f)
salasobrien.com

REGISTERED PROFESSIONAL ENGINEER JEFFRY GOSAL No. E18084 ELECTRICAL STATE OF CALIFORNIA
11.16.2021
Date Signed:

PLANS PREPARED BY:
Blair, Church & Flynn
CONSULTING ENGINEERS
451 Clovis Avenue, Suite 200
Clovis, California 93612
Tel (559) 326-1400
Fax (559) 326-1500

LOCATION: BISHOP, CALIFORNIA

BISHOP SERVICE CENTER
SITE DEVELOPMENT
ELECTRICAL DETAILS

VOLUME 1

SHEET NO. E5.4a

SCALE: AS NOTED

60 OF 64 SHTS.

SOUTHERN CALIFORNIA EDISON An EDISON INTERNATIONAL Company

100% CONSTRUCTION DOCUMENTS (02-26-2021)

SOBE #191223a

SOUTHERN CALIFORNIA EDISON
2012 - 5 SIZE

Drawing: K:\drawings\Blair Church & Flynn\191223 SCE Bishop Service Center\191223a Site Development\191223E5.4a.dwg; Layout1 - BCF.ctb
Plot by: toan.pham Dec 05, 2021 - 8:51pm

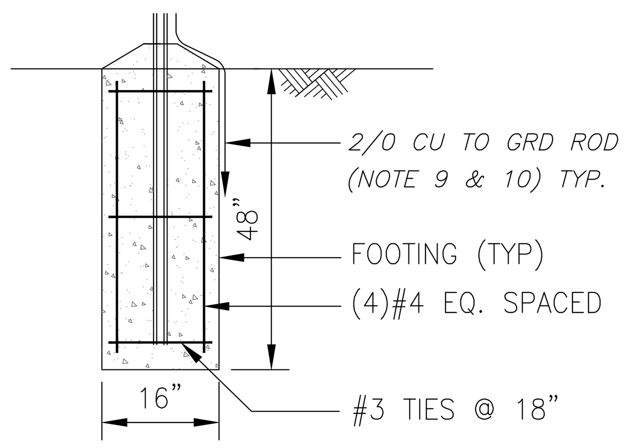

3 **FOOTING DETAIL**
SCALE: N.T.S.

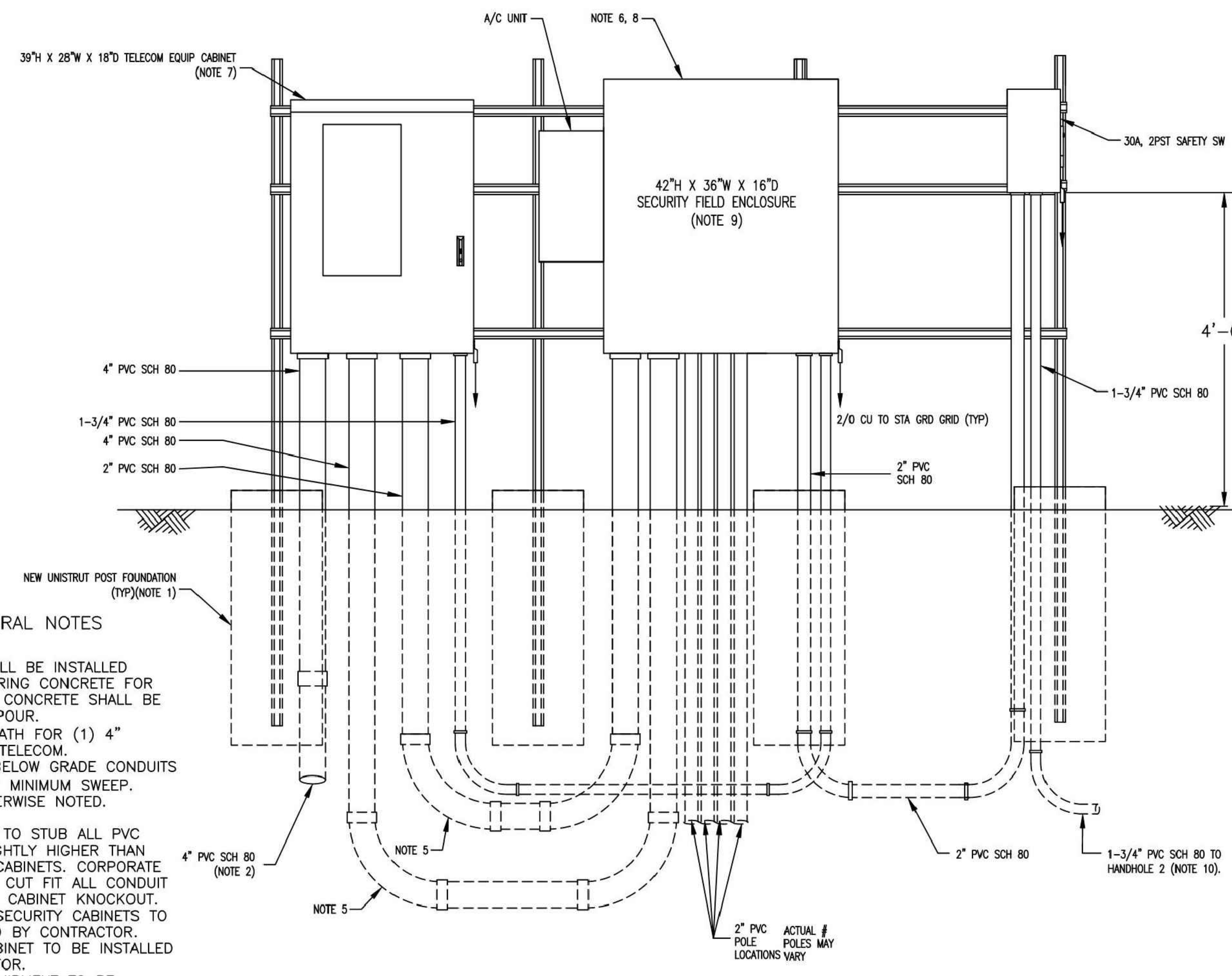

FRONT ELEVATION – FIELD ENCLOSURES

GENERAL NOTES

1. CONDUIT SHALL BE INSTALLED BEFORE POURING CONCRETE FOR FOUNDATION. CONCRETE SHALL BE MONOLITHIC POUR.
2. PROVIDE A PATH FOR (1) 4" CONDUIT TO TELECOM.
3. ALL OTHER BELOW GRADE CONDUITS TO HAVE 12" MINIMUM SWEEP. UNLESS OTHERWISE NOTED.
4. NOT USED.
5. CONTRACTOR TO STUB ALL PVC CONDUIT SLIGHTLY HIGHER THAN BOTTOM OF CABINETS. CORPORATE SECURITY TO CUT FIT ALL CONDUIT INTO BOTTOM CABINET KNOCKOUT.
6. CORPORATE SECURITY CABINETS TO BE INSTALLED BY CONTRACTOR.
7. TELECOM CABINET TO BE INSTALLED BY CONTRACTOR.
8. SECURITY EQUIPMENT TO BE PROVIDED AND INSTALLED BY CONTRACTOR.
9. PROVIDE A PATH FOR (1) 1-3/4" PVC SCH 80 CONDUIT FROM MAIN POWER SOURCE.
10. PROVIDE MINIMUM 30A CIRCUIT FROM NEAREST 120VAC PANEL.

2 **TELECOM AND SECURITY CABINETS SECTION B**
SCALE: N.T.S.

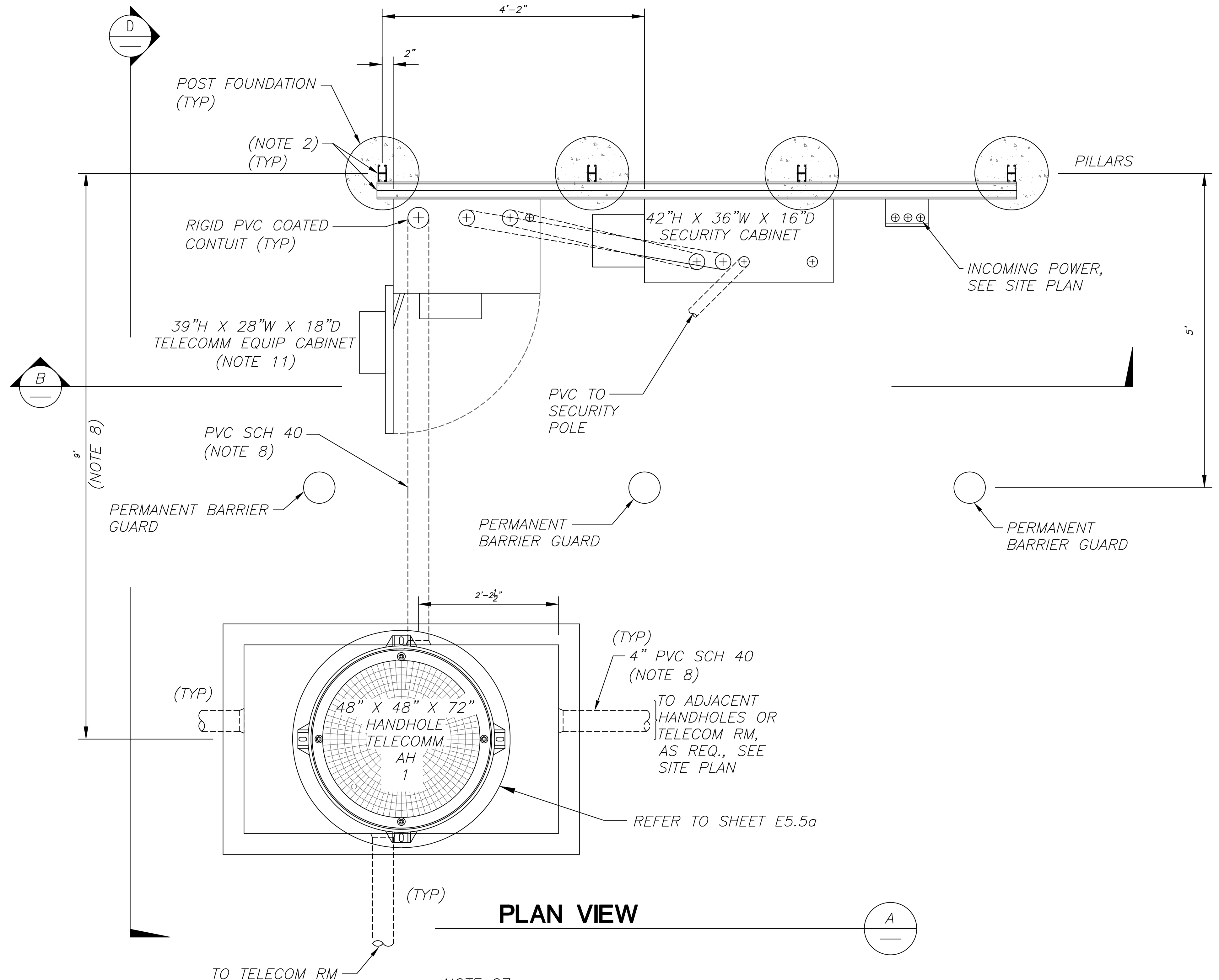

PLAN VIEW

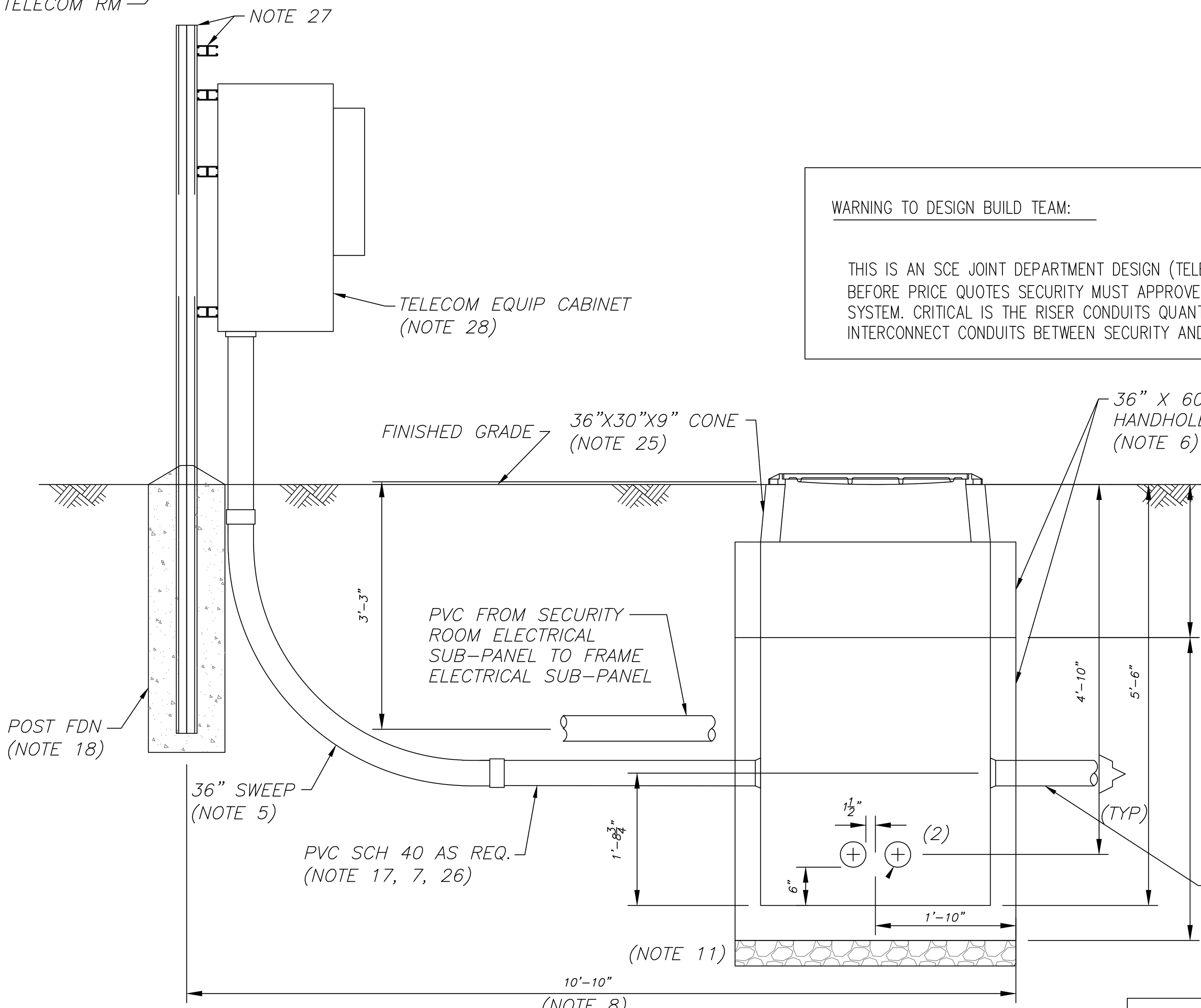

SECTION D
HANDHOLE CONDUIT TERMINATIONS

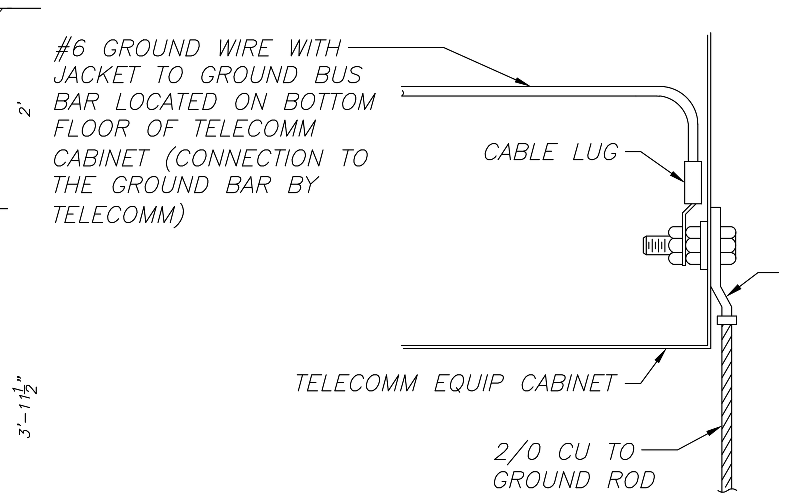

DETAIL C
TELECOMM CABINET GRD

1 **TELECOM AND SECURITY CABINETS PLANT DETAIL**
SCALE: N.T.S.

NOTES:

1. PROJECT TO PURCHASE AND INSTALL ALL MATERIAL UNLESS OTHERWISE INDICATED (U.O.N.)
2. SECURITY CABINET, ALL WIRING WITHIN, WIRING TO POLE AND ALL END DEVICES TO BE PROVIDED AND INSTALLED BY SCE CORPORATE SECURITY.
3. SPACING OF ALL STRUT CHANNEL POSTS TO BE AT 3'-4" CENTER-TO-CENTER.
4. LOWER HORIZONTAL STRUT CHANNEL TO BE 1'-2" ABOVE FINISHED GRADE.
5. LOCATION OF TELECOM HANDHOLE TO BE DETERMINED BASED ON ACCESSIBILITY TO HAVE 36" BEND RADIUS/SWEEP FOR THE 4" PVC RISER TO TELECOM CABINET FROM HANDHOLE.
6. HANDHOLE/PRECASE CONCRETE VAULT MFR: OLDCASTLE P/N: TELECOM 35-48FO, OR APPROVED EQUAL.
7. GROUND ROD OPTION IS NOT REQUIRED IN TELECOM HANDHOLE.
8. A GROUND ROD SHALL BE INSTALLED AT EACH FROM AND POLE LOCATION U.N.O
9. 2/0 SOFT COPPER WIRE SHALL BE USED FOR ALL YARD GROUND WIRE.
10. EXOTHERMIC CONNECTION ONLY FROM GROUND ROD TO TAILS WITH SINGLE HOLD 1/2" HOLE LONG BARREL LUGS TO END OF TAIL CONNECTION TO FRAM, CABINETS AND POLES.
11. A 4" THICK BASE OF 1" CRUSHED ROCK SHALL BE UNDER BASE OF HANDHOLE/PRECASE CONCRETE VAULT FOR DRAINAGE.
12. ALL CONDUIT SHALL BE SCHEDULE 40 U.O.N.
13. 1 & 1-1/2" C.O BELOW GRADE CONDUITS TO HAVE 6" MINIMUM BEND RADIUS.
14. 2" C.O. BELOW GRADE CONDUITS TO HAVE 12" MINIMUM BEND RADIUS.
15. 3 & 4" C.O. BELOW GRADE CONDUITS TO HAVE 36" MINIMUM BEND RADIUS.
16. ALL BELOW GRADE CONDUIT SHALL BE INSTALLED BEFORE PORING CONCRETE FOOTINGS.
17. PROJECT TO STUB OUT ALL PVC CONDUIT SLIGHTLY HIGHER THAN BOTTOM OF SECURITY CABINET
18. TELECOM CABINET TO HAVE 4-9/16" HOLES FIELD DRILLED 3" FROM TOP AND BOTTOM AND 1-1/2" FROM SIDES TO SECURE CABINET TO STRUT FRAME USING 1/2" SPRING NUTS, AND STAINLESS-STEEL HARDWARE ON THE INSIDE BOLTS, LOCK WASHER AND FLAT WASHERS (U.N.O.).
19. FRAME ELECTRICAL SUB-PANEL PER ELECTRICAL DESIGN SPECIFICATION.
20. SECURITY CABINETS TO BE PURCHASED & INSTALLED BY SCE CORPORATE SECURITY (SHOWN FOR REFERENCE ONLY).
21. CORPORATE SECURITY TO CUT LENGTH ALL CONDUIT INTO BOTTOM OF SECURITY CABINET
22. TELECOM CABINET ELECTRICAL LOAD REQUIREMENT IS 5 AMPERES.
23. FIELD TO INSTALL TOP OF CONE AT FINISHED GRADE LEVEL.
24. FIELD TO VERIFY THE REQUIRED DEPTH OF TELECOM CONDUIT INTO HANDHOLE.
25. ALL STRUT CHANNEL, 1-5/8" X 1-5/8" W/ 9/16" HOLES. MFR: UNISTRUT P/N: P1000H3.
26. TELECOM CABINET, MFR: CHARLES INDUSTRIES, LTD. PART NO.: PM41613BN1.

WARNING TO DESIGN BUILD TEAM:

THIS IS AN SCE JOINT DEPARTMENT DESIGN (TELECOM AND SECURITY. THEREFORE, BEFORE PRICE QUOTES SECURITY MUST APPROVE (PENDING) ALL DESIGN DETAILS RELATING TO POWER FEEDERS AND SECURITY SYSTEM. CRITICAL IS THE RISER CONDUITS QUANTITY, SIZE AND SPACING INTO THE FRAME ELECTRICAL SUB-PANEL, INTERCONNECT CONDUITS BETWEEN SECURITY AND TELECOM CABINETS, CONDUITS TO POLES AND GATE DEVICES.

NO.	REVISIONS	DATE	SAP WO	SUPV	APPROVED	ENGR	CK'D	MADE	P.E.
3	ADDENDUM 2	12-01-2021							
	ADDENDUM 1	02-26-2021							
	ADDENDUM A	11-18-2020							

REFERENCE DRAWINGS | REFERENCE DRAWINGS | NO. | REVISIONS | DATE | SAP WO | SUPV | APPROVED | ENGR | CK'D | MADE | P.E.

SALASO'BRIEN
expect a difference
305 South 11th Street
San Jose, California 95112-2218
408.282.1500 | 408.297.2995 (f)
salasobrien.com

REGISTERED PROFESSIONAL ENGINEER JEFFRY GOGAL No. E16084 ELECTRICAL STATE OF CALIFORNIA
11.16.2021 Date Signed

PLANS PREPARED BY:
Blair, Church & Flynn
CONSULTING ENGINEERS
451 Clovis Avenue, Suite 200
Clovis, California 93612
Tel (559) 326-1400
Fax (559) 326-1500

LOCATION: BISHOP, CALIFORNIA

BISHOP SERVICE CENTER
SITE DEVELOPMENT
ELECTRICAL DETAILS

VOLUME 1

SHEET NO. E5.5a

SCALE: AS NOTED

61 OF 64 SHTS.

SOUTHERN CALIFORNIA EDISON — An EDISON INTERNATIONAL Company

100% CONSTRUCTION DOCUMENTS (02-26-2021)

SOBE #191223a

Drawing: K:\drawings\Blair Church & Flynn\191223 SCE Bishop Service Center\191223a Site Development\191223E5.5a.dwg; Layout1 – BCF.ctb
Plot by: loan.pham Dec 05, 2021 – 8:51pm

SOUTHERN CALIFORNIA EDISON
2012 – 5 SIZE

	1	2	3	4	5	6	7	8	9	10	11	12

IN SWITCHBOARD 'MSB' RATED: 2000A BUS VOLTAGE: 480Y/277V
IN CIRCUIT BREAKER 2000A/3P PHASE: 3 WIRE 4

erior Lighting	=	1	X	11,838	VA	=	11,838	VA
hting - Exterior	=	1	X	6,703	VA	=	6,703	VA
ergy Recovery Ventilator (ERV) - Admin	=	1	X	7,601	VA	=	7,601	VA
ndensing Units - Admin	=	1	X	61,236	VA	=	61,236	VA
circulation Pump (RCP) - Admin	=	1	X	0.007	VA	=	0.007	VA
n Coil Units (FC) - Admin	=	1	X	15,183	VA	=	15,183	VA
at Recovery Units (HRU) - Admin	=	1	X	148	VA	=	148	VA
haust Fans (EF) - Admin	=	1	X	1,037	VA	=	1,037	VA
e Smoke Damper (FSD) - Admin	=	1	X	288	VA	=	288	VA
DF Equipment - Admin	=	1	X	18,013	VA	=	18,013	VA
curity Equipment - Admin	=	1	X	37,800	VA	=	37,800	VA
at Pump - Garage	=	1	X	258,553	VA	=	258,553	VA
ctric Unit Heaters (UH) - Garage	=	1	X	7,659	VA	=	7,659	VA
ergy Recovery Ventilator (ERV) - Garage	=	1	X	757	VA	=	757	VA
ndensing Units (CU) - Garage	=	1	X	30,922	VA	=	30,922	VA
n Coil Units (FC) - Garage	=	1	X	853	VA	=	853	VA
at Recovery Units (HRU) - Garage	=	1	X	42	VA	=	42	VA
haust Fans (EF) - Garage	=	1	X	5,114	VA	=	5,114	VA
e Smoke Damper (FSD) - Garage	=	1	X	288	VA	=	288	VA
DF Equipment - Garage	=	1	X	3,600	VA	=	3,600	VA
curity Equipment - Garage	=	1	X	3,600	VA	=	3,600	VA
frigerator	=	2	X	1,000	VA	=	2,000	VA
rbage Disposal	=	2	X	1,200	VA	=	2,400	VA
crowave	=	2	X	1,200	VA	=	2,400	VA
Machine (Prefab Shop)	=	1	X	1,400	VA	=	1,400	VA
ta Hot Water Dispenser	=	2	X	750	VA	=	1,500	VA
ceptacles 100%	=	80	X	180	VA	=	14,400	VA
ceptacles - EM	=	30	X	180	VA	=	5,400	VA
ceptacles - Furniture	=	44	X	1,000	VA	=	44,000	VA
ter Heater	=	2	X	9,000	VA	=	18,000	VA
ap Dispenser, Electronic Faucet, Electronic Flush	=	1	X	134	VA	=	134	VA
e Alarm Panel	=	2	X	500	VA	=	1,000	VA
te Operator	=	4	X	1,171	VA	=	4,683	VA
el Island Control	=	1	X	18,013	VA	=	18,013	VA
ptic Level Alarm	=	1	X	500	VA	=	500	VA
rklift Chargers	=	2	X	17,292	VA	=	34,585	VA
ll Up Doors	=	6	X	1,330	VA	=	7,981	VA
rage Building - Equipment Loads	=	1	X	498,404	VA	=	498,404	VA
e Pump House Pnl	=	1	X	8,320	VA	=	8,320	VA
% of Largest Motor (HP-1)	=	0.25	X	146,319	VA	=	36,580	VA
gation Controller	=	1	X	1,200	VA	=	1,200	VA
ure Electric Vehicle Station EV1	=	17	X	6,656	VA	=	113,152	VA
ure Electric Vehicle Station EV1 (80 AMPS)	=	1	X	13,312	VA	=	13,312	VA
ure Electric Vehicle Station EV2 (180 KW)	=	1	X	180,000	VA	=	180,000	VA
ure Electric Vehicle Station EV3 and EV4 (50KW)	=	2	X	50,000	VA	=	100,000	VA
lculated Load						=	1,580,597	VA
al Calculated Load						=	1,580,597	VA
tal Service Amps						=	**1,901**	**AMPS**
00A @ 100% per NEC						=	*2,000*	*AMPS*

SWITCHBOARD 'DPB-1H' RATED: 1000A BUS VOLTAGE: 480Y/277V
MAIN CIRCUIT BREAKER 1000A/3P PHASE: 3 WIRE 4
(ADMIN)

Exhaust Fans 120V/1PH - Admin	=	1	X	0.007	VA	=	0.007	VA
Exhaust Fans 120V/1PH - Admin	=	1	X	1,037	VA	=	1,037	VA
Energy Recovery Unit (ERV)	=	1	X	7,601	VA	=	7,601	VA
Condensing Units 208V/1PH - Admin	=	1	X	44,941	VA	=	44,941	VA
Fan Coils 208V/1PH - Admin	=	1	X	14,122	VA	=	14,122	VA
HRUs 208V/1PH	=	1	X	148	VA	=	148	VA
Irrigation Controller	=	1	X	1,200	VA	=	1,200	VA
Garbage Disposal	=	1	X	1,200	VA	=	1,200	VA
Microwave	=	2	X	1,200	VA	=	2,400	VA
Water Heater	=	1	X	9,000	VA	=	9,000	VA
Ice Machine (Prefab Shop)	=	1	X	1,400	VA	=	1,400	VA
Receptacles 100%	=	56	X	180	VA	=	10,080	VA
Receptacles - Furniture	=	44	X	1,000	VA	=	44,000	VA
Forklift Chargers	=	2	X	17,292	VA	=	34,585	VA
Future Electric Vehicle Station EV1	=	17	X	6,656	VA	=	113,152	VA
Future Electric Vehicle Station EV1 (80 AMPS)	=	1	X	13,312	VA	=	13,312	VA
Future Electric Vehicle Station EV2 (180 KW)	=	1	X	180,000	VA	=	180,000	VA
Future Electric Vehicle Station EV3 and EV4 (50KW)	=	2	X	50,000	VA	=	100,000	VA
Calculated Load						=	578,178	VA
Total Calculated Load						=	578,178	VA
Total Service Amps						=	**695**	**AMPS**
1000A @ 80% Rated						=	*800*	*AMPS*

<E>SWITCHBOARD 'DPB-1L' RATED: 1600A BUS VOLTAGE: 208Y/120V
MAIN CIRCUIT BREAKER 1600A/3P PHASE: 3 WIRE 4
(ADMIN)

Recirculation Pump - Admin	=	1	X	0.007	VA	=	0.007	VA
Exhaust Fans 120V/1PH - Admin	=	1	X	1,037	VA	=	1,037	VA
Energy Recovery Unit (ERV)	=	1	X	7,601	VA	=	7,601	VA
Condensing Units 208V/1PH - Admin	=	1	X	44,941	VA	=	44,941	VA
Fan Coils 208V/1PH - Admin	=	1	X	14,122	VA	=	14,122	VA
HRUs 208V/1PH	=	1	X	148	VA	=	148	VA
Irrigation Controller	=	1	X	1,200	VA	=	1,200	VA
Garbage Disposal	=	1	X	1,200	VA	=	1,200	VA
Microwave	=	2	X	1,200	VA	=	2,400	VA
Water Heater	=	1	X	9,000	VA	=	9,000	VA
Ice Machine (Prefab Shop)	=	1	X	1,400	VA	=	1,400	VA
Receptacles 100%	=	56	X	180	VA	=	10,080	VA
Receptacles - Furniture	=	44	X	1,000	VA	=	44,000	VA
Fire Smoke Damper	=	1	X	288	VA	=	288	VA
Forklift Chargers	=	2	X	17,292	VA	=	34,585	VA
Future Electric Vehicle Station EV1	=	1	X	13,312	VA	=	13,312	VA
Future Electric Vehicle Station EV1	=	17	X	6,656	VA	=	113,152	VA
Calculated Load						=	298,466	VA
Total Calculated Load						=	298,466	VA
Total Service Amps						=	**828**	**AMPS**
1600A @ 80% per NEC						=	*1,280*	*AMPS*

SWITCHBOARD 'DPB-2H' RATED: 1200A BUS VOLTAGE: 480Y/277V
MAIN CIRCUIT BREAKER 1200A/3P PHASE: 3 WIRE 4
(GARAGE)

Heat Pump (HP1, HP2, & HP3) Unit	=	1	X	258,553	VA	=	258,553	VA
Exhaust Fans	=	1	X	5,114	VA	=	5,114	VA
Condenser Units	=	1	X	30,922	VA	=	30,922	VA
Fan Coil Units	=	1	X	853	VA	=	853	VA
Heat Recovery Units	=	1	X	42	VA	=	42	VA
Energy Recovery Ventilator	=	1	X	757	VA	=	757	VA
Garbage Disposal	=	1	X	1,200	VA	=	1,200	VA
Receptacles	=	24	X	180	VA	=	4,320	VA
Water Heater	=	1	X	9,000	VA	=	9,000	VA
GARAGE BAY LOADS - DPB-2L	=	1	X	88,675	VA	=	88,675	VA
GARAGE BAY LOADS - DPB-2H								
20 HIGH PRESSURE WASH SYSTEM	=	1	X	49,050	VA	=	49,050	VA
23 LOW PRESSURE WASH SYSTEM	=	1	X	10,808	VA	=	10,808	VA
37 HEAVY DUTY LIFT	=	1	X	22,447	VA	=	22,447	VA
43c EQUIPMENT RECEPTACLE, 480V	=	1	X	199,526	VA	=	199,526	VA
58 EXHAUST HOSE REEL	=	1	X	4,988	VA	=	4,988	VA
CRANE	=	1	X	20,098	VA	=	20,098	VA
Calculated Load						=	706,352	VA
Total Calculated Load						=	706,352	VA
Total Service Amps						=	**850**	**AMPS**
1200A @80% per NEC						=	*960*	*AMPS*

SWITCHBOARD 'DPB-2L' RATED: 600A BUS VOLTAGE: 208Y/120V
MAIN CIRCUIT BREAKER 500A/3P PHASE: 3 WIRE 4
(GARAGE)

Exhaust Fans	=	1	X	5,114	VA	=	5,114	VA
Condenser Units	=	1	X	30,922	VA	=	30,922	VA
Fan Coil Units	=	1	X	853	VA	=	853	VA
Heat Recovery Units	=	1	X	42	VA	=	42	VA
Energy Recovery Ventilator	=	1	X	757	VA	=	757	VA
Garbage Disposal	=	1	X	1,200	VA	=	1,200	VA
Receptacles	=	24	X	180	VA	=	4,320	VA
Water Heater	=	1	X	9,000	VA	=	9,000	VA
GARAGE BAY LOADS - DPB-2L								
10 TIRE CHANGER	=	1	X	4,992	VA	=	4,992	VA
11 WHEEL BALANCER	=	1	X	3,120	VA	=	3,120	VA
15 LUBRICATION REEL	=	1	X	1,920	VA	=	1,920	VA
25 VACUUM SYSTEM	=	1	X	1,920	VA	=	1,920	VA
27 OIL FILTER CRUSHER	=	1	X	4,160	VA	=	4,160	VA
30 AIR DRYER	=	1	X	1,920	VA	=	1,920	VA
43b EQUIPMENT RECEPTACLE, 208V	=	1	X	49,920	VA	=	49,920	VA
46 RELOCATED WELDER	=	1	X	13,312	VA	=	13,312	VA
49 FUME EXTRACTOR	=	1	X	1,800	VA	=	1,800	VA
50 BAND SAW	=	1	X	1,440	VA	=	1,440	VA
52 PEDESTAL GRINDER	=	1	X	811	VA	=	811	VA
66 RELOCATED ELEC. BECH	=	1	X	1,440	VA	=	1,440	VA
67 DEONIZED WATER TANK	=	1	X	1,920	VA	=	1,920	VA
Calculated Load						=	140,882	VA
Total Calculated Load						=	140,882	VA
Total Service Amps						=	**391**	**AMPS**
600A @ 80% per NEC						=	*480*	*AMPS*

MAIN SWITCHBOARD 'EMSB' RATED: 2000A BUS VOLTAGE: 480Y/277V
MAIN CIRCUIT BREAKER 2000A/3P PHASE: 3 WIRE 4

Interior Lighting	=	1	X	11,838	VA	=	11,838	VA
Lighting - Exterior	=	1	X	6,703	VA	=	6,703	VA
Condensing Units - Admin (CU-3, CU-4, CU5)	=	1	X	16,295	VA	=	16,295	VA
Fan Coil Units - Admin (FC-15, FC-18, FC-19)	=	1	X	1,061	VA	=	1,061	VA
Fire Smoke Damper (FSD) - Admin	=	1	X	288	VA	=	288	VA
MDF Equipment - Admin	=	1	X	18,013	VA	=	18,013	VA
Security Equipment - Admin	=	1	X	37,800	VA	=	37,800	VA
Electric Unit Heaters (UH) - Garage	=	1	X	7,659	VA	=	7,659	VA
Exhaust Fans - Garage (EF-1)	=	1	X	336	VA	=	336	VA
Fire Smoke Damper (FSD) - Garage	=	1	X	192	VA	=	192	VA
MDF Equipment - Garage	=	1	X	3,600	VA	=	3,600	VA
Security Equipment - Garage	=	1	X	3,600	VA	=	3,600	VA
Refrigerator	=	2	X	1,000	VA	=	2,000	VA
Receptacles - EM	=	30	X	180	VA	=	5,400	VA
Insta Hot Water Dispenser	=	2	X	9,000	VA	=	18,000	VA
Soap Dispenser, Electronic Faucet, Electronic Flush	=	1	X	134	VA	=	134	VA
Fire Alarm Panel	=	2	X	500	VA	=	1,000	VA
Gate Operator	=	4	X	1,171	VA	=	4,683	VA
Fuel Island Control	=	1	X	18,013	VA	=	18,013	VA
Septic Level Alarm	=	1	X	500	VA	=	500	VA
Roll Up Doors	=	6	X	1,330	VA	=	7,981	VA
Garage Building - Equipment Loads	=	1	X	90,331	VA	=	90,331	VA
Fire Pump House Pnl	=	1	X	8,320	VA	=	8,320	VA
25% of Largest Motor (CU-5)	=	0.25	X	8,142	VA	=	2,035	VA
Calculated Load						=	265,783	VA
Total Calculated Load						=	265,783	VA
Total Service Amps						=	**320**	**AMPS**
600A @ 80% per NEC						=	*480*	*AMPS*

SWITCHBOARD 'EDPB-1H' RATED: 600A BUS VOLTAGE: 480Y/277V
MAIN CIRCUIT BREAKER 400A/3P PHASE: 3 WIRE 4
(ADMIN)

Interior Lighting	=	1	X	5,919	VA	=	5,919	VA
Lighting - Exterior	=	1	X	6,703	VA	=	6,703	VA
CU-5 & FC-19	=	1	X	8,620	VA	=	8,620	VA
CU-4 & FC-18	=	1	X	4,555	VA	=	4,555	VA
CU-3 & FC-15	=	1	X	4,181	VA	=	4,181	VA
MDF Equipment	=	1	X	18,013	VA	=	18,013	VA
Security Equipment	=	1	X	23,820	VA	=	37,800	VA
Insta Hot Water Dispenser	=	1	X	750	VA	=	37,800	VA
Refrigerator	=	1	X	1,000	VA	=	1,000	VA
Receptacles 100% - EM	=	30	X	180	VA	=	7,380	VA
Fire Smoke Damper	=	1	X	288	VA	=	288	VA
Fire Alarm Panel	=	1	X	500	VA	=	500	VA
Soap Dispenser, Electronic Faucet, Electronic Flush 120	=	1	X	67	VA	=	67	VA
Gate Operator	=	4	X	1,171	VA	=	3,200	VA
Fuel Island Control	=	1	X	18,013	VA	=	18,013	VA
Septic Level Alarm	=	1	X	500	VA	=	500	VA
Rollup Doors	=	1	X	1,330	VA	=	1,330	VA
25% of Largest Motor (CU-5)	=	0.25	X	8,142	VA	=	2,035	VA
Calculated Load						=	157,904	VA
Total Calculated Load						=	157,904	VA
Total Service Amps						=	**190**	**AMPS**
400A @ 80% Rated						=	*320*	*AMPS*

<E>SWITCHBOARD 'EDPB-1L' RATED: 600A BUS VOLTAGE: 208Y/120V
MAIN CIRCUIT BREAKER 600A/3P PHASE: 3 WIRE 4
(ADMIN)

CU-5 & FC-19	=	1	X	8,620	VA	=	8,620	VA
CU-4 & FC-18	=	1	X	4,555	VA	=	4,555	VA
CU-3 & FC-15	=	1	X	4,181	VA	=	4,181	VA
MDF Equipment	=	1	X	18,013	VA	=	18,013	VA
Security Equipment	=	1	X	23,820	VA	=	23,820	VA
Insta Hot Water Dispenser	=	1	X	750	VA	=	750	VA
Refrigerator	=	1	X	1,000	VA	=	1,000	VA
Receptacles 100% - EM	=	30	X	180	VA	=	5,400	VA
Fire Smoke Damper	=	1	X	288	VA	=	288	VA
Fire Alarm Panel	=	1	X	500	VA	=	500	VA
Soap Dispenser, Electronic Faucet, Electronic Flush 120	=	1	X	67	VA	=	67	VA
Gate Operator	=	4	X	1,171	VA	=	4,683	VA
Fuel Island Control	=	1	X	18,013	VA	=	18,013	VA
Septic Level Alarm	=	1	X	500	VA	=	500	VA
Calculated Load						=	90,390	VA
Total Calculated Load						=	90,390	VA
Total Service Amps						=	**251**	**AMPS**
600A @ 80% per NEC						=	*480*	*AMPS*

4

SWITCHBOARD 'EDPB-2H' RATED: 400A BUS VOLTAGE: 480Y/277V
MAIN CIRCUIT BREAKER 400A/3P PHASE: 3 WIRE 4
(GARAGE)

Interior Lighting	=	1	X	5,353	VA	=	5,353	VA
Unit Heaters (UH-1, UH-2, & UH-3)	=	1	X	7,659	VA	=	7,659	VA
Exhaust Fan (EF-1)	=	1	X	5,450	VA	=	5,450	VA
MDF Equipment - EB5L	=	1	X	3,600	VA	=	3,600	VA
Security Equipment - EB5L	=	1	X	3,600	VA	=	3,600	VA
Fire Alarm Panel	=	1	X	500	VA	=	500	VA
Insta Hot Water Dispenser	=	1	X	750	VA	=	750	VA
Refrigerator	=	1	X	1,000	VA	=	1,000	VA
Soap Dispenser, Electronic Faucet, Electronic Flush 120	=	1	X	67	VA	=	67	VA
Receptacles 100% - EM	=	8	X	180	VA	=	1,440	VA
Fire Smoke Dampers	=	1	X	192	VA	=	192	VA
GARAGE BAY LOADS - EDPB-2L	=	1	X	70,388	VA	=	70,388	VA
GARAGE BAY LOADS - EDPB-2H								
33 AIR COMPRESSOR	=	1	X	11,639	VA	=	11,639	VA
34 HEAVY DUTY LIFT	=	1	X	20,784	VA	=	20,784	VA
Roll Up Doors	=	5	X	1,330	VA	=	6,651	VA
Fire Pump House Pnl	=	1	X	8,320	VA	=	8,320	VA
Calculated Load						=	139,073	VA
Total Calculated Load						=	139,073	VA
Total Service Amps						=	**167**	**AMPS**
400A @80% per NEC						=	*320*	*AMPS*

SWITCHBOARD 'EDPB-2L' RATED: 400A BUS VOLTAGE: 208Y/120V
MAIN CIRCUIT BREAKER 300A/3P PHASE: 3 WIRE 4
(GARAGE)

Unit Heaters (UH-1 & UH-2)	=	1	X	1,008	VA	=	1,008	VA
Exhaust Fan (EF-1)	=	1	X	5,450	VA	=	5,450	VA
MDF Equipment - EB5L	=	1	X	3,600	VA	=	3,600	VA
Security Equipment - EB5L	=	1	X	3,600	VA	=	3,600	VA
Fire Alarm Panel	=	1	X	500	VA	=	500	VA
Insta Hot Water Dispenser	=	1	X	750	VA	=	750	VA
Refrigerator	=	1	X	1,000	VA	=	1,000	VA
Soap Dispenser, Electronic Faucet, Electronic Flush 120	=	1	X	67	VA	=	67	VA
Receptacles 100% - EM	=	8	X	180	VA	=	1,440	VA
Fire Smoke Dampers	=	1	X	192	VA	=	192	VA
GARAGE BAY LOADS - EDPB-2L								
7 HYDRAULIC HOSE CRIMPING	=	1	X	1,872	VA	=	1,872	VA
8 TIRE SPREADER	=	1	X	1,920	VA	=	1,920	VA
9 TIRE CHANGER	=	1	X	5,200	VA	=	5,200	VA
14 LUBRICATION REEL	=	1	X	1,920	VA	=	1,920	VA
43a EQUIPMENT RECEPTACLE FIRST 10kVA	=	1	X	9,600	VA	=	9,600	VA
43a EQUIPMENT RECEPTACLE REMAINING 50%	=	1	X	18,240	VA	=	18,240	VA
47 PARTS WASHER	=	1	X	996	VA	=	996	VA
48 BELT SANDER	=	1	X	1,440	VA	=	1,440	VA
51 DRILL PRESS	=	1	X	1,440	VA	=	1,440	VA
54 CONTROL PNL	=	1	X	1,000	VA	=	1,000	VA
57 KEY MACHINE	=	1	X	600	VA	=	600	VA
64 WALL MOUNT BATTERY CHARGER	=	1	X	1,200	VA	=	1,200	VA
91 INGROUND LIFT	=	2	X	12,480	VA	=	24,960	VA
Fire Pump House Pnl	=	1	X	8,320	VA	=	8,320	VA
Calculated Load						=	87,995	VA
Total Calculated Load						=	87,995	VA
Total Service Amps						=	**244**	**AMPS**
400A @ 80% per NEC						=	*320*	*AMPS*

												4	ADDENDUM 3	02-18-2022									
													ADDENDUM 2	12-01-2021									
													ADDENDUM 1	02-26-2021									
													ADDENDUM A	11-18-2020									
REFERENCE DRAWINGS	REFERENCE DRAWINGS	NO.	REVISIONS	DATE	SAP WO	SUPV	APPROVED	ENGR	CK'D	MADE	P.E.	NO.	REVISIONS	DATE	SAP WO	SUPV	APPROVED	ENGR	CK'D	MADE	P.E.		

SALASO'BRIEN
|expect a difference|
305 South 11th Street
San Jose, California 95112-2218
408.282.1500 | 408.297.2995 (f)
salasobrien.com

REGISTERED PROFESSIONAL ENGINEER JEFFRY GOSAL No. E18084 ELECTRICAL STATE OF CALIFORNIA
11.16.2021
Date Signed:

PLANS PREPARED BY:
Blair, Church & Flynn
CONSULTING ENGINEERS
451 Clovis Avenue, Suite 200
Clovis, California 93612
Tel (559) 326-1400
Fax (559) 326-1500

LOCATION: BISHOP, CALIFORNIA

BISHOP SERVICE CENTER
SITE DEVELOPMENT
ELECTRICAL LOAD CALCULATIONS

VOLUME 1

SOUTHERN CALIFORNIA EDISON An EDISON INTERNATIONAL Company

SHEET NO. E6.1a

SCALE: AS NOTED

62 OF 64 SHTS.

100% CONSTRUCTION DOCUMENTS (02-26-2021)

SOBE #191223a

Drawing: K:\drawings\Blair Church & Flynn\191223 SCE Bishop Service Center\191223a Site Development\191223E6.1a.dwg; LAYOUT - BCF.ctb
Plot by: minh.ong Feb 18, 2022 - 4:30pm

SOUTHERN CALIFORNIA EDISON
2012 - 5 SIZE

FEEDER SCHEDULE

3-PHASE FEEDER SCHEDULE							
FEEDER DESIGNATION	No. OF SETS	PHASE CONDUCTOR (PER SET)	'N' NEUTRAL CONDUCTOR (PER SET)	'G' GROUND CONDUCTOR (PER SET)	'SG' SYSTEM BONDING JUMPER (PER SET)	CONDUIT SIZE FOR 3-PHASE & GROUND (G OR GEC) (PER SET)	CONDUIT SIZE FOR 3-PHASE & NEUTRAL & GROUND (G OR GEC) (PER SET)
20	1	(3) #10	#10	#10	#8	3/4"C	3/4"C
30	1	(3) #10	#10	#10	#8	3/4"C	3/4"C
40	1	(3) #8	#8	#10	#8	3/4"C	3/4"C
50	1	(3) #6	#6	#10	#8	1"C	1"C
60	1	(3) #4	#4	#10	#8	1-1/4"C	1-1/4"C
70	1	(3) #4	#4	#8	#8	1-1/4"C	1-1/4"C
80	1	(3) #2	#2	#8	#8	1-1/2"C	1-1/2"C
90	1	(3) #2	#2	#8	#8	1-1/2"C	1-1/2"C
100	1	(3) #1	#1	#8	#6	1-1/2"C	2"C
125	1	(3) #1	#1	#6	#6	1-1/2"C	2"C
150	1	(3) #1/0	#1/0	#6	#6	1-1/2"C	2"C
175	1	(3) #2/0	#2/0	#6	#4	2"C	2"C
200	1	(3) #3/0	#3/0	#6	#4	2"C	2-1/2"C
225	1	(3) #4/0	#4/0	#4	#2	2-1/2"C	2-1/2"C
250	1	(3) #250 Kcmil	#250 Kcmil	#4	#2	2-1/2"C	3"C
300	1	(3) #350 Kcmil	#350 Kcmil	#4	#2	3"C	3"C
350	1	(3) #500 Kcmil	#500 Kcmil	#3	#1/0	4"C	4"C
400	1	(3) #600 Kcmil	#600 Kcmil	#3	#1/0	4"C	4"C
450	2	(3) #4/0	#4/0	#2	#1/0	2-1/2"C	2-1/2"C
500	2	(3) #250 Kcmil	#250 Kcmil	#2	#1/0	2-1/2"C	3"C
600	2	(3) #350 Kcmil	#350 Kcmil	#1	#2/0	3"C	3"C
700	2	(3) #500 Kcmil	#500 Kcmil	#1/0	#2/0	4"C	4"C
800	3	(3) #300 Kcmil	#300 Kcmil	#1/0	#2/0	3"C	3"C
1000	3	(3) #400 Kcmil	#400 Kcmil	#2/0	#3/0	3"C	3-1/2"C
1200	4	(3) #350 Kcmil	#350 Kcmil	#3/0	#3/0	3"C	3"C
1600	5	(3) #400 Kcmil	#400 Kcmil	#4/0	#3/0	3"C	3-1/2"C
2000	5	(3) #600 Kcmil	#600 Kcmil	#250 Kcmil	#3/0	4"C	4"C
2500	6	(3) #600 Kcmil	#600 Kcmil	#350 Kcmil	#3/0	4"C	4"C
3000	8	(3) #600 Kcmil	#600 Kcmil	#400 Kcmil	#3/0	4"C	4"C
4000	10	(3) #600 Kcmil	#600 Kcmil	#500 Kcmil	#3/0	4"C	4"C

EXAMPLES:

A. 300G = INDICATES (1) SET OF [3"C. – (3)#350 Kcmil + #4 GROUND CONDUCTOR].
B. 300SG = INDICATES (1) SET OF [3"C. – (3)#350 Kcmil + #2 GROUND CONDUCTOR].
C. 300NG = INDICATES (1) SET OF [3"C. – (3)#350 Kcmil + (1)#350 Kcmil NEUTRAL + #4 GROUND CONDUCTOR].
D. 300NSG = INDICATES (1) SET OF [3"C. – (3)#350 Kcmil + (1)#350 Kcmil NEUTRAL + #2 GROUND CONDUCTOR].
E. 600NG = INDICATES (2) SET OF [3"C. – (3)#350 Kcmil + (1)#350 Kcmil NEUTRAL + #1 GROUND CONDUCTOR].

NOTES:

1. ALL CONDUCTORS SHALL BE COPPER, THHN-2 or THWN-2.
2. NOT ALL FEEDERS ON THIS SCHEDULE ARE NECESSARILY USED ON THIS PROJECT.

VOLTAGE DROP

3

VOLTAGE DROP CALCULATIONS - 3-PHASE PF: 0.85

	From	To	Conductor Size (AWG)	Amps per wire	Length (Feet)	Impedance (at 0.85 PF) per 1000 ft	Voltage Drop L-L	% Voltage Drop 480V	% Voltage Drop 208V	Total %VD From Source
		ADMIN BUILDING								
1	(N)MSB (480V)	(N) SWBD DPB-1H	600	267	433	0.040	8.019	1.67%		1.67%
2	(N) XMFR-DPB1	(N) SWBD DPB-1L	600	256	279	0.040	4.960		2.38%	2.38%
3	(N) DPB-1L	(N) PNL A1L (REC)	600	320	10	0.040	0.222		0.11%	2.49%
4	(N) DPB-1L	(N) PNL A2L (HVAC)	600	320	10	0.040	0.222		0.11%	2.49%
5	(N) DPB-1L	(N) PNL EV1	250	200	10	0.066	0.228		0.11%	2.49%
6	(N) DPB-1H	(N) PNL A2H (HVAC)	3/0	100	279	0.088	4.232	0.88%		2.55%
7	(N) DPB-1H	(F) EV2 CHARGER 125KW	3/0	150	372	0.088	8.464	1.76%		3.43%
8	(N) DPB-1H	(F) EV3 CHARGER 50KW	1	80	109	0.152	2.292	0.48%		2.15%
9	(N) DPB-1H	(F) EV4 CHARGER 50KW	1	80	109	0.152	2.292	0.48%		2.15%
10	(N) MSB	(N) FIRE PUMP	4/0	153	245	0.074	4.824	1.00%		1.00%
11	(N)MSB (480V)	(N) EMSB	600	240	433	0.040	7.217	1.50%		1.50%
12	(N)EMSB (480V)	(N) SWBD EDPB-1H	600	320	10	0.040	0.222	0.05%		1.55%
13	(N) XMFR-EDPB1	(N) SWBD EDPB-1L	600	160	279	0.040	3.100		1.49%	1.49%
14	(N) SWBD EGDPB	(N) SWBD EMSB	350	240	124	0.053	2.751	0.57%		0.57%
15	(N) SWBD EGDPB	(N) FIRE PUMP CIRCUIT BREAKER	4/0	153	522	0.074	10.278	2.14%		2.14%
16	(N) FIRE PUMP CIRCUIT BREAKER	(N) FIRE PUMP	4/0	153	245	0.074	4.824	1.00%		3.15%
17	(N) EDPB-1L	(N) PNL EA1L (REC)	1	100	10	0.152	0.263		0.13%	2.51%
18	(N) EDPB-1L	(N) PNL EA2L (HVAC)	4/0	180	10	0.074	0.232		0.11%	2.50%
19	(N) EDPB-1L	(N) PNL EA5L (IT Loads)	1	100	50	0.152	1.314		0.63%	2.12%
20	(N) EDPB-1L	(N) PNL EA4L (FUEL CANOPY)	250	60	332	0.066	2.270		1.09%	2.58%
21	(N) EDPB-1L	(N) PNL E6AL (SECURITY)	1/0	100	50	0.125	1.084		0.52%	2.01%
22	(N) B2L	(N) TRASH COMPACTOR	3/0	40	823	0.088	4.993		2.40%	4.89%
23	(N) EDPB-1L	(N) PNL EGEN	1/0	56	279	0.125	3.388		1.63%	3.12%
24	(N) EDPB-1H	(N) PNL EA3H (LIGHTING)	1	100	279	0.152	7.332	1.53%		3.08%
25	(N) EDPB-1H	(N) PNL EA2H (HVAC)	1	100	279	0.152	7.332	1.53%		3.02%
		GARAGE BUILDING								
26	(N) MSB (480V)	(N) SWBD DPB-2H	600	320	245	0.040	5.445	1.13%		1.13%
27	(N) XMFR-DPB2	(N) SWBDPNL DPB-2L	350	240	10	0.053	0.222		0.11%	0.11%
28	(N) DPB-2L	(N) PNL B1L (REC)	1	100	81	0.152	2.129		1.02%	1.13%
29	(N) DPB-2L	(N) PNL B2L (HVAC)	350	180	196	0.053	3.261		1.57%	1.67%
30	(N) DPB-2L	(N) PNL B4L (GARAGE EQPMT)	350	160	261	0.053	3.860		1.86%	1.96%
31	(N) DPB-2H	(N) PNL B2H (HVAC)	600	320	196	0.040	4.356	0.91%		2.04%
32	(N) DPB-2H	(N) PNL B4H (GARAGE EQPMT)	350	240	261	0.053	5.791	1.21%		2.34%
33	(N) EMSB (480V)	(N) SWBD EDPB-2H	600	107	365	0.040	2.704	0.56%		2.07%
34	(N) XMFR-EDPB-2H	(N) SWBDPNL EDPB-2L	600	320	10	0.040	0.222		0.11%	0.11%
35	(N) EDPB-2L	(N) PNL EB1L (REC)	1	100	81	0.152	2.129		1.02%	1.13%
36	(N) EDPB-2L	(N) PNL EB2L (HVAC)	3/0	100	196	0.088	2.973		1.43%	1.54%
37	(N) EDPB-2L	(N) PNL EB4L (GARAGE EQPMT)	600	320	196	0.040	4.356		2.09%	2.20%
38	(N) EDPB-2L	(N) PNL EB5L (IT/SEC)	1	100	81	0.152	2.129		1.02%	1.13%
39	(N) EDPB-2H	(N) PNL EB3H (LIGHTING)	1	100	81	0.152	2.129	0.44%		2.51%
40	(N) EDPB-2H	(N) PNL EB2H (HVAC)	350	180	261	0.053	4.343	0.90%		2.97%
41	(N) B2H	(N) HP-1	3/0	129	80	0.088	1.565	0.33%		2.67%

VOLTAGE DROP CALCULATIONS - 1-PHASE

	From	To	Conductor Size	Amps per wire	Length	Impedance (at 0.85 PF) per 1000 ft	Voltage Drop L-L	Voltage Drop L-N	% Voltage Drop 240V	% Voltage Drop 120V	% Voltage Drop 277V	% Voltage Drop 208V	
42	(N) A3H (LIGHTING)	LIGHTING CIRCUIT (LONGEST)	8	4.94	709	0.690	2.417	4.835			1.75%		**4.82%**
43	(N) A1L	IRRIGATION CONTROLLER	6	3.3	748	0.443	1.915	2.211		1.84%			**4.33%**
44	(N) A1L	RECEPTACLE (LONGEST)	4	6.00	704	0.289	2.113	2.440		2.03%			**4.52%**
45	(N) A2L	SEPTIC TANK LEVEL ALARM	8	4.2	348	0.690	1.734	2.002		1.67%			**4.16%**
46	(N) EA6L	CHARLES CABINET 1	3/0	24.0	797	0.088	2.901	3.350		2.79%			**4.80%**
47	(N) EA6L	CHARLES CABINET 2	1/0	24.0	291	0.125	1.514	1.748		1.46%			**3.47%**
48	(N) EA6L	CHARLES CABINET 3	1/0	24.0	583	0.125	3.034	3.503		2.92%			**4.93%**
49	(N) EA6L	CHARLES CABINET 4	1/0	24.0	413	0.125	2.149	2.482		2.07%			**4.08%**
50	(N) EDPB-1L	(N) PANEL EA7L	2/0	40.0	720	0.108	5.370	6.201				2.58%	**4.59%**

Drawing: K:\drawings\Blair Church & Flynn\191223 SCE Bishop Service Center\191223a Site Development\191223E6.2a.dwg; LAYOUT – BCF.ctb
Plot by: toan.pham Dec 05, 2021 – 8:51pm

NO.	REVISIONS	DATE
3	ADDENDUM 2	12-01-2021
	ADDENDUM 1	02-26-2021
	ADDENDUM A	11-18-2020

REFERENCE DRAWINGS | REFERENCE DRAWINGS | NO. | REVISIONS | DATE | SAP WO | SUPV | APPROVED | ENGR | CK'D | MADE | P.E.

SALASO'BRIEN
|expect a difference|
305 South 11th Street
San Jose, California 95112-2218
408.282.1500 | 408.297.2995 (f)
salasobrien.com

REGISTERED PROFESSIONAL ENGINEER JEFFRY GOSAL No. E18084 ELECTRICAL STATE OF CALIFORNIA
11.16.2021
Date Signed:

PLANS PREPARED BY:
Blair, Church & Flynn
CONSULTING ENGINEERS
451 Clovis Avenue, Suite 200
Clovis, California 93612
Tel (559) 326-1400
Fax (559) 326-1500

LOCATION: BISHOP, CALIFORNIA

BISHOP SERVICE CENTER
SITE DEVELOPMENT
ELECTRICAL VOLTAGE DROP & FEEDER SCHEDULE
VOLUME 1

SOUTHERN CALIFORNIA EDISON An EDISON INTERNATIONAL Company

SHEET NO. E6.2a
SCALE: AS NOTED
63 OF 64 SHTS.

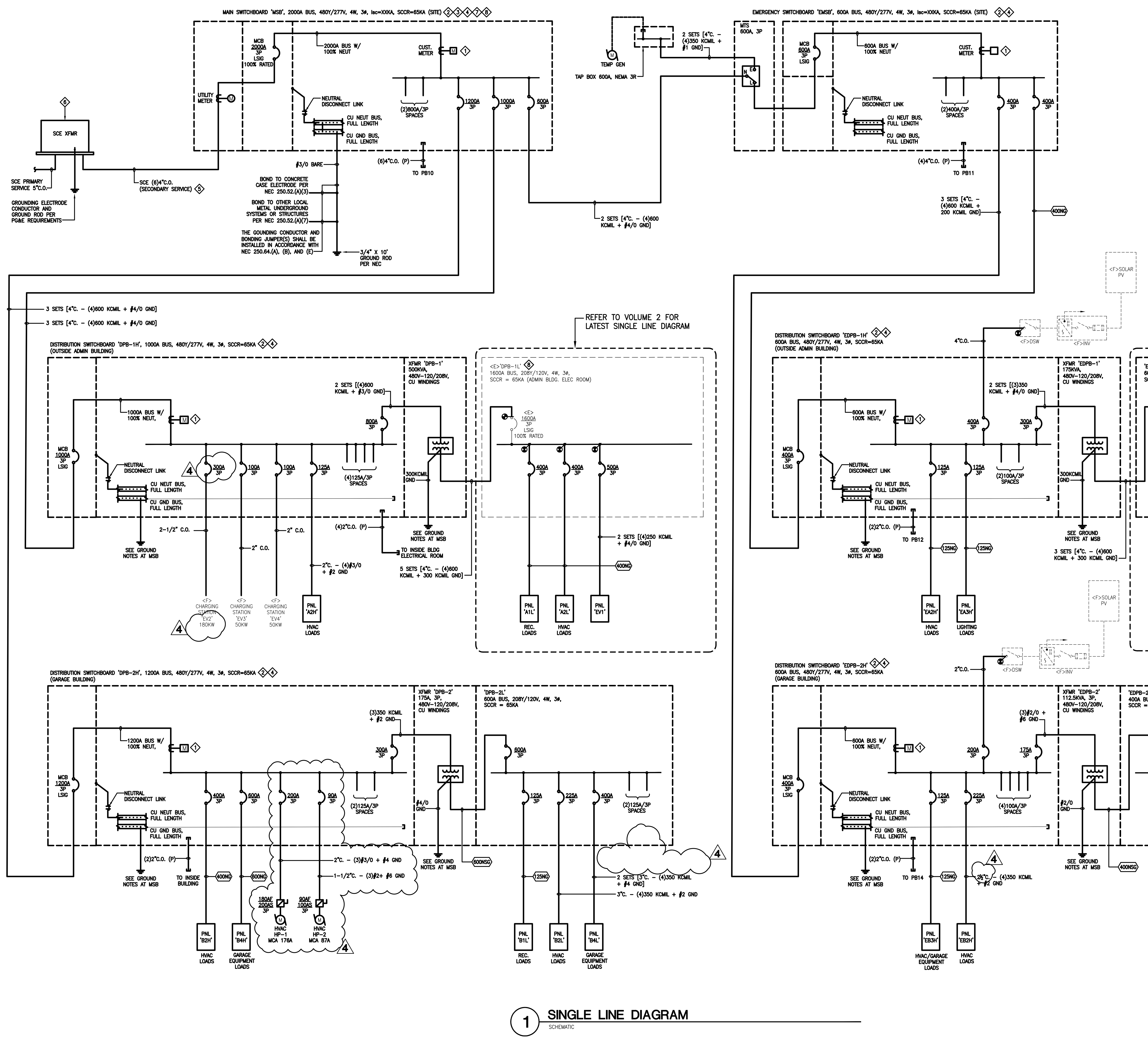

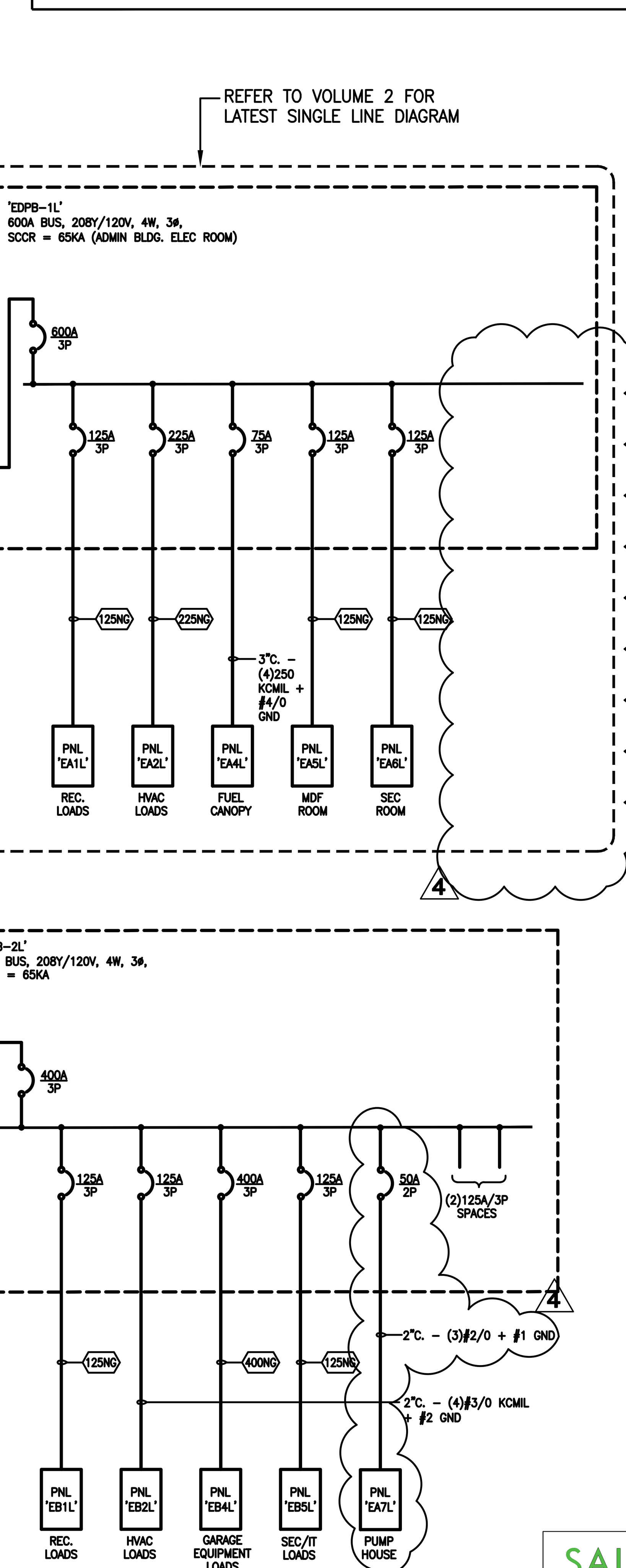

1 SINGLE LINE DIAGRAM
SCHEMATIC

REFERENCE SHEET NOTES

1. CUSTOMER METER, ELECTRO INDUSTRIES SHARK 200 OR APPROVED EQUAL. PROVIDE ALL THE NECESSARY POWER COMM WIRNG AS WELL AS HARDWARE AND MOUNTING FOR A COMPLETE AND FUNCTIONAL MONITORING INSTALLATION. ELECTRO INDUSTRIES REPRESENTATIVE TO PROVIDE PROGRAMMING FOR MONITORING AND RECORDING OF DATA. PROVIDE WITH ETHERNET CARD. ROUTE 2"C. – CAT6 FROM MDF ROOM. CONNECT AND VERIFY COMMUNICATIONS TO BMS SYSTEM.
2. NEMA 3R FREESTANDING OUTDOOR SWITCHBOARD. PROVIDE THERMOSTAT CONTROLLED HEAT STRIP AND CONNECTION TO HEAT STRIP.
3. PROVIDE AND INSTALL METER MAIN SOCKET. COORDINATE SOCKET REQUIREMENTS WITH SCE.
4. PROVIDE SHORT CIRCUIT AND ARC FLASH STUDY, SEE SPECIFICATIONS. PRIOR TO ORDERING EQUIPMENT, PROVIDE SHORT CIRCUIT CURRENT RATING (SCCR) OF EQUIPMENT FOR APPROVAL.
5. CONTRACTOR TO PROVIDE CONDUIT AND MULETAPE FOR UTILITY WIRING. COORDINATE EXACT ROUTING WITH UTILITY. ADJUST PER UTILITY SUBSTRUCTURE PACKAGE.
6. COORDINATE WITH UTILITY AND ROUTE CONNECTION TO NEW MSB. CONTRACTOR TO PROVIDE AND INSTALL UNDERGROUND INFRASTRUCTURE, TRANSFORMER AND CONCRETE PAD IN STRICT CONFORMANCE TO SCE REQUIREMENTS. CONTRACTOR TO TAKE OVER SCE APPLICATION.
7. EXISTING GATE CONTROLLER CIRCUITS TO BE INTERCEPTED AND REFED BY PANEL A1L, REFER TO SITE PLAN AND VOLUME II.
8. EXISTING 1600A, 208V TO BE REMOVED AND BE REPLACED NEW SWITHBOARD. REFER TO SITE PLAN.

GENERAL SHEET NOTES

A. CIRCUIT BREAKER TERMINALS IN SWITCHBOARDS SHALL BE U.L LISTED AND APPROVED FOR USE COPPER 75 DEGREE CELSIUS CONDUCTORS.

B. FINAL TERMINATIONS OF CONDUCTORS TO ELECTRICAL EQUIPMENT AND DEVICES SHALL BE TORQUE WRENCH TIGHTENED TO THE MANUFACTURER'S RECOMMENDED SPECIFICATION, NO EXCEPTION. PROVIDE NEUTRAL TEST AND PROOF OF TORQUE DURING FINAL INSPECTION FOR ALL UNITS.

C. ELECTRICAL SERVICE DESIGN BASED ON IEM EQUIPMENT. COORDINATE AND ADJUST PER EQUIPMENT SUPPLIED.

D. SIZES OF BREAKERS, SWITCHES, FUSES AND FEEDERS ARE BASED ON DESIGNED EQUIPMENT SIZES. THESE SIZES SHALL BE ADJUSTED TO SATISFY REQUIREMENTS OF ACTUAL INSTALLED OR SUBSTITUTE EQUIPMENT. UP SIZING OR DOWNSIZING OF FEEDERS SHALL BE PROVIDED WITHOUT ADDITIONAL COST TO THE OWNER.

E. AS REQUIRED ALL OVERSIZED FEEDERS THAT WERE ADJUSTED IN SIZE TO COMPENSATE FOR VOLTAGE DROP SHALL BE PROVIDED WITH ADAPTER LUGS OR SPLICE BOX. ADAPTER LUGS SHALL BE PROVIDED IF SIZE IS AVAILABLE. OTHERWISE PROVIDE CABLE SPLICES IN THE SPLICE BOX TO REDUCE CABLES TO THE MAXIMUM SIZE THAT THE BREAKER LUGS CAN ACCOMMODATE.

F. SWITCHBOARD, PANELBOARD BUSES, AND TRANSFORMER COILS SHALL BE COPPER.

UTILITY SERVICE REQUIREMENT

SCE APPLICATION HAS BEEN SUBMITTED. CONTRACTOR SHALL TAKE OVER SCE APPLICATION AND COORDINATE WORK DIRECTLY WITH SCE. CONTRACTOR TO INSTALL ALL EQUIPMENT TO COMPLY WITH SCE REQUIREMENTS WHICH INCLUDES BUT NOT LIMITED TO, THE INSTALLATION OF CONDUITS FROM SCE TRANSFORMER TO NEW MSB. IT IS THE CONTRACTOR'S RESPONSIBILITY TO COORDINATE ALL MEETINGS AND INSPECTIONS WITH SCE.

POWER SYSTEM STUDY REQUIREMENTS

CONTRACTOR SHALL RETAIN THE SERVICES OF A CALIFORNIA LICENSED ELECTRICAL ENGINEER FROM PRE SELECTED LIST BELOW TO PERFORM SHORT CIRCUIT AND ARC FLASH STUDIES FOR THE NEW ELECTRICAL DISTRIBUTION SHOWN ON THIS SINGLE LINE DIAGRAM PRIOR TO PERFORMING STUDIES CONTRACTOR SHALL PREPARE AND UPDATE THE SINGLE LINE DIAGRAMS WITH EXISTING CONDITIONS WHICH INCLUDE ALL BUILDING MOTOR LOADS 50 HP AND OVER, PANELS 200 AMPS AND OVER, AND OVERCURRENT PROTECTION DEVICES INCLUDING MANUFACTURER, MAKES AND STYLES, AND RATINGS. UPDATED SINGLE LINE DIAGRAM SHALL ALSO INCLUDE CONDUCTOR QUANTITY, SIZES, LENGTHS BETWEEN LOAD AND OVERCURRENT PROTECTION DEVICE, AND CONDUIT TYPE AND SIZES. PROVIDE A USB DRIVE WITH RECORD SINGLE LINE DIAGRAM FILE UTILIZING AUTOCAD 2010 OR HIGHER TO OWNER AND ENGINEER.

PROTECTION DEVICE STUDY:

REGISTERED ENGINEER SHALL CONTACT UTILITY AND OBTAIN A LETTER STATING THE AVAILABLE FAULT CURRENT (AIC) AT THIS FACILITY. PROVIDE A COPY OF THIS LETTER IN FINAL REPORT.

ANALYZE THE SPECIFIC ELECTRICAL AND UTILIZATION EQUIPMENT (ACCORDING TO NEC DEFINITION), THE ACTUAL PROTECTIVE DEVICES AND THE ACTUAL FEEDER LENGTHS. INCLUDE IN STUDY ALL NEW DISTRIBUTION WIRING AND EQUIPMENT, FROM PRIMARY SOURCE TO BUSES AND BRANCH CIRCUIT PANELBOARDS. COMPLY WITH REQUIREMENTS AND RECOMMENDATIONS OF NFPA 70, IEEE 399, AND IEEE 242. STATE THE METHODOLOGY AND RATIONALE EMPLOYED IN MAKING EACH TYPE OF CALCULATION; IDENTIFY COMPUTER SOFTWARE PACKAGE(S) USED. PREPARE A SCHEMATIC ONE LINE DIAGRAM DRAWING OF ELECTRICAL DISTRIBUTION SYSTEM, WITH ALL ELECTRICAL EQUIPMENT AND WIRING TO BE PROTECTED BY THE PROTECTIVE DEVICES; IDENTIFY NODES ON THE DIAGRAMS FOR REFERENCE ON REPORT THAT INCLUDES:

1. CALCULATED FAULT IMPEDANCE, X/R RATIOS, UTILITY CONTRIBUTION, AND SHORT CIRCUIT VALUES (ASYMMETRIC AND SYMMETRIC) AT THE HOUSE SERVICE PANELS AND ALL DOWNSTREAM DEVICES CONTAINING PROTECTIVE DEVICES.
2. BREAKER AND FUSE RATINGS.
3. GENERATOR KW AND VOLTAGE RATINGS, PERCENT IMPEDANCE, X/R RATIOS, AND WIRING CONNECTIONS.
4. TRANSFORMER KVA AND VOLTAGE RATINGS, PERCENT IMPEDANCE, X/R RATIOS, AND WIRING CONNECTIONS.
5. IDENTIFICATION OF EACH BUS, WITH VOLTAGE.
6. CONDUIT MATERIALS, FEEDER SIZES, ACTUAL LENGTHS, AND X/R RATIOS.
7.

SHORT CIRCUIT STUDY:

CALCULATE THE FAULT IMPEDANCE TO DETERMINE AVAILABLE 1–PHASE SHORT CIRCUIT AND GROUND FAULT CURRENTS AT EACH BUS AND PIECE OF EQUIPMENT DURING NORMAL CONDITIONS, ALTERNATE OPERATIONS, STANDBY POWER CONDITIONS, AND OTHER OPERATIONS THAT COULD RESULT IN MAXIMUM FAULT CONDITIONS. SHOW AVAILABLE FAULT CURRENTS AT KEY POINTS IN THE SYSTEM DOWN TO A FAULT CURRENT OF 7,000A AT 240V. INCLUDE MOTOR CONTRIBUTIONS IN DETERMINING THE MOMENTARY AND INTERRUPTING RATINGS OF THE PROTECTIVE DEVICES. WITHIN REPORT INCLUDE ALL PERTINENT DATA USED IN CALCULATIONS. FOR EACH DEVICE INCLUDE DEVICE IDENTIFICATION, OPERATING VOLTAGE, PROTECTIVE DEVICE, DEVICE RATING, AND CALCULATED SHORT CIRCUIT CURRENT, ASYMMETRICAL AND SYMMETRICAL, AND GROUND FAULT CURRENT.

ARC FLASH STUDY:

PROVIDE ARC FLASH STUDY FOR SYSTEM AS DEFINED IN SECTION 1.04.C ABOVE IN COMPLIANCE WITH NFPA – 70E AND NEC 110–16. INCLUDE A RECOMMENDED LIST OF ARC FLASH WARNING SIGNAGE AND LOCATIONS TO INSTALL. INDICATE ARC FLASH BOUNDARIES, INCIDENT ENERGIES, PPE (PERSONAL PROTECTIVE EQUIPMENT) REQUIREMENTS, SHOCK HAZARD VOLTAGE LEVEL, APPROACH DISTANCES; LIMITED, RESTRICTED, & PROHIBITED.

SALASO'BRIEN
|expect a difference|
305 South 11th Street
San Jose, California 95112-2218
408.282.1500 | 408.297.2995 (f)
salasobrien.com

REGISTERED PROFESSIONAL ENGINEER JEFFRY GOSAL No. E18084 ELECTRICAL STATE OF CALIFORNIA
11.16.2021
Date Signed:

PLANS PREPARED BY:
Blair, Church & Flynn
CONSULTING ENGINEERS
451 Clovis Avenue, Suite 200
Clovis, California 93612
Tel (559) 326-1400
Fax (559) 326-1500

NO.	REVISIONS	DATE	SAP WO	SUPV	APPROVED	ENGR	CK'D	MADE	P.E.
4	ADDENDUM 3	02-18-2022							
	ADDENDUM 2	12-01-2021							
	ADDENDUM 1	02-26-2021							
	ADDENDUM A	11-18-2020							

REFERENCE DRAWINGS | REFERENCE DRAWINGS | NO. | REVISIONS | DATE | SAP WO | SUPV | APPROVED | ENGR | CK'D | MADE | P.E.

LOCATION: BISHOP, CALIFORNIA

BISHOP SERVICE CENTER
SITE DEVELOPMENT
ELECTRICAL SINGLE LINE DIAGRAM
VOLUME 1

SOUTHERN CALIFORNIA EDISON — An EDISON INTERNATIONAL Company

SHEET NO. E7.1a
SCALE: AS NOTED
61 OF 64 SHTS.

100% CONSTRUCTION DOCUMENTS (02-26-2021)

SOBE #191223a

Drawing: K:\drawings\Blair Church & Flynn\191223 SCE Bishop Service Center\191223a Site Development\191223E7.1a.dwg; Layout1 – BCF.ctb
Plot by: minh.ong Feb 18, 2022 – 4:31pm
SOUTHERN CALIFORNIA EDISON
2012 – 5 SIZE

Non-Exempt CEQA Project Review Form
Water Supply Permits
State Water Resources Control Board
Division of Drinking Water

Water System Number:	1410801	**Lead Agency:**	Inyo County
Water System Name:	SCE Bishop Creek Plant 5	**Date NOD Filed:**	7/2/19
County:	Inyo County	**State Clearinghouse #:**	2014081051

DDW Project Engineer or SPRU staff: Daniel White
Date: 4/3/23

Project Title: Southern California Edison

Project Location (Address, City): Highway 168/Plant 6 Road, Bishop, Inyo County, Parcel 012-080-15

Purpose of the Project: The applicant has constructed a full service operations center north of an existing unregulated water system.

Project Description (brief): A new potable water tank and potable water piping were installed.

Type of CEQA Document: Negative Declaration (ND) ☐ Mitigated Negative Declaration (MND) ☒

List of Permits Required related to water resources: Required permits may include the U.S. Army Corps of Engineers Section 404 of the Clean Water Act, CDFW Section 1600 Streambed Alteration Agreement, .and Regional Water Quality Control Board Section 401 certification.

Date CEQA document approved by lead agency: 9/16/2014

There will not be potentially significant impacts to water resources.

The potentially significant impacts identified in the Initial Study checklist are: ☐

If the document is an MND and there are potentially significant impacts, is the applicant implementing any Best Management Practices (BMPs) or Mitigation Measures to reduce or avoid impacts to water resources?

Responsible Agency Findings:

- The Lead Agency filed a Notice of Determination with the State Clearinghouse or County Clerk.
- Mitigation Measures were not made a condition of the Lead Agency's approval of the Project.
- A Mitigation Monitoring and Reporting Program (MMRP) was prepared for the Project: ☐Yes ☒No
- State Water Board staff reviewed and considered the environmental documents listed above and determined that the Project will not result in significant adverse impacts to water resources.
- A copy of the CEQA document is available for review at the Lead Agency's office.

Notice of Determination

TO:
Governor's Office of Planning and Research
State Clearinghouse Office
1400 Tenth Street, Room 113 Sacramento
CA 95814

FROM:
State Water Resources Control Board
Division of Drinking Water
464 W 4th St, Ste 437
San Bernardino, CA 92407
Daniel White
909-383-4394

Lead Agency: Inyo County

Contact Person: Cathreen Richards

Phone Number: 760-878-0447

SUBJECT:
Filing of Notice of Determination in compliance with Section 21108 of the Public Resources Code

State Clearinghouse Number: 2014081051

Project Applicant: Southern California Edison

Project Title: Southern California Edison Service Center (Project)

Project Location: Highway 168/Plant 6 Road, Bishop, Inyo County, Parcel 012-080-15

Project Description:

The applicant has constructed a full service operations center north of an existing unregulated water system. A new potable water tank and potable water piping were installed.

Public Agency Approving Project: The Southern California Edison is carrying out the Project. The State Water Resources Control Board (State Water Board), Division of Drinking Water (DDW), is the Responsible Agency for the Project. The Division of Drinking Water has approved for the above described Project on 02/20/2024, and has made the following California Environmental Quality Act Determinations regarding the project:

1.The project will not have a significant effect on the environment. This determination is limited to the effects within the State Water Board's permitting jurisdiction as a Responsible Agency.

2. The State Water Board has considered the Initial Study Mitigated Negative Declaration prepared by the Lead Agency for the Project pursuant to the provisions of CEQA.

3.Mitigation measures were not made a condition of the State Water Board's approval of the Project.

4. A mitigation monitoring and reporting plan/program was not adopted by the State Water Board for the Project.

5. A Statement of Overriding Considerations was not adopted by the State Water Board for the for the Project.

6. Findings were not made by the State Water Board pursuant to California Code of Regulations section 15091.

A record of approved for the Project is available to the general public at the State Water Board, Division of Drinking Water District Office listed above. The Initial Study Mitigated Negative Declaration is available from the Lead Agency.

Signature: Wei H. Chang Digitally signed by Wei H. Chang Date: 2024.02.20 14:16:53 -08'00' **Date:** 02/20/2024

Name: Wei Chang **Title:** District Engineer